SUPPLEMENTAL
OFFSITE SOIL VAPOR INTRUSION MONITORING PLAN FOR THE SOIL VAPOR EXTRACTION CONTAINMENT SYSTEM

SITE 1 – FORMER DRUM MARSHALLING AREA

NWIRP BETHPAGE
Bethpage, New York

Naval Facilities Engineering Command
Mid-Atlantic

Contract No. N62470-08-D-1001
Contract Task Order WE06

DECEMBER 2011

SUPPLEMENTAL
OFFSITE SOIL VAPOR INTRUSION MONITORING PLAN
FOR THE
SOIL VAPOR EXTRACTION CONTAINMENT SYSTEM

SITE 1 – FORMER DRUM MARSHALLING AREA

NWIRP BETHPAGE
Bethpage, New York

NAVAL FACILITIES ENGINEERING COMMAND
MID-ATLANTIC

COMPREHENSIVE LONG-TERM
ENVIRONMENTAL ACTION NAVY (CLEAN) CONTRACT

Submitted to:
Naval Facilities Engineering Command
Mid-Atlantic
9742 Maryland Avenue
Norfolk, Virginia 23511-3095

Prepared and Submitted by:
Tetra Tech NUS, Inc.
234 Mall Boulevard, Suite 260
King of Prussia, Pennsylvania 19406-1433

Contract No. N62470-08-D-1001
Contract Task Order WE06

December 2011

PREPARED UNDER THE DIRECTION OF:

DAVE BRAYACK
PROJECT MANAGER
TETRA TECH NUS, INC.
NORFOLK, VIRGINIA

APPROVED FOR SUBMISSION BY:

JOHN J. TREPANOWSKI, P.E.
PROGRAM MANAGER
TETRA TECH NUS, INC.
KING OF PRUSSIA, PENNSYLVANIA

TABLE OF CONTENTS

SECTION **PAGE**

ACRONYMS **A-1**

1.0 INTRODUCTION **1-1**

2.0 OFFSITE SVPM INSTALLATION **2-1**

3.0 SVE CONTAINMENT SYSTEM OFFSITE VACUUM FIELD MONITORING **3-1**

4.0 OFFSITE SOIL GAS MONITORING **4-1**

5.0 REPORTING **5-1**

REFERENCES **R-1**

APPENDICES

A NYSDEC Letter
B SVPM and SVE Construction Logs
C SVE, SVPM Vacuum Measurement, and Soil Gas Sampling Log Sheets

TABLES

NUMBER

1 SVE and SVPM Construction Details
2 Offsite Soil Gas Monitoring Sample Nomenclature and Analytical Method

FIGURES

NUMBER

1 General Location Map
2 Site Location Map
3 SVE/SVPM Location Map

ACRONYMS

APU	air purification unit
AS/SVE	air sparging/soil vapor extraction
CLEAN	Comprehensive Long-Term Environmental Action Navy
CTO	contract task order
DCA	1, 1-dichloroethane
DCE	1, 1-dichloroethene
DPT	direct-push technology
ELAP	Environmental Laboratory Approval Program
GAC	granular activated carbon
in-wc	inches of water column
mL	milliliter
mL/min	milliliter per minute
NFA	no further action
NWIRP	Naval Weapons Industrial Reserve Plant
NYSDEC	New York State Department of Environmental Conservation
NYSDOH	New York State Department of Health
OM&M	Operation, Maintenance, and Monitoring
PCE	Tetrachloroethene
SSD	sub-slab depressurization
SVE	soil vapor extraction
SVI	soil vapor intrusion
SVPM	Soil Vapor Pressure Monitor
TCA	1, 1, 1-trichloroethene
TCE	trichloroethene
Tetra Tech	Tetra Tech NUS, Inc.
VOC	volatile organic compound
USEPA	United States Environmental Protection Agency
$\mu g/m^3$	micrograms per cubic meter

1.0 INTRODUCTION

Tetra Tech NUS Inc. (Tetra Tech) under Contract Task Order (CTO) WE06 prepared this Supplemental Offsite Soil Vapor Intrusion (SVI) Monitoring Plan for the Naval Facilities Engineering Command Mid-Atlantic under the Comprehensive Long-Term Environmental Action Navy (CLEAN) contract number N62470-08-D-1001. This plan presents the additional soil vapor pressure and analytical monitoring to evaluate the effectiveness of the Soil Vapor Extraction (SVE) Containment System at Site 1 – Former Drum Marshalling Area, Naval Weapons Industrial Reserve Plant (NWIRP) Bethpage, Long Island, New York in controlling potential SVI. This plan details the installation of additional Soil Vapor Pressure Monitoring (SVPM)/soil gas monitoring points and the vacuum field and soil gas monitoring to be conducted in the residential neighborhood east of Site 1 at NWIRP Bethpage (Figures 1 and 2). This monitoring plan supplements the Final Operation, Maintenance, and Monitoring (OM&M) plan submitted in June 2010 (Tetra Tech EC, 2010) that addresses onsite actions.

Site 1 – Former Drum Marshalling Area was impacted by the historic releases of chlorinated solvents and was initially remediated via an air sparging/soil vapor extraction (AS/SVE) system between 1998 and 2002. The treatment and remedial goals were based on protection of groundwater. Soil gas testing conducted in January 2008 indicated elevated concentrations of Volatile Organic Compounds (VOCs) along the eastern boundary of Site 1 that could potentially affect the adjacent residential neighborhood (Tetra Tech, 2008). Additional soil gas testing was conducted in the Town of Oyster Bay right-of-ways from October 2008 through January 2009 to evaluate the potential migration of contaminated soil vapor off-site (Tetra Tech, 2009a). Based on evaluation of this soil gas data, sampling (indoor air, outdoor air, and sub-slab soil vapor) were conducted to evaluate potential vapor intrusion into residential homes.

From January through April 2009, soil vapor intrusion sampling was conducted in 18 residential homes located east and adjacent to Site 1 (Tetra Tech, 2009b). Between February and May 2011, as an interim measure, granular activated carbon (GAC)-based air purification units (APUs) and sub-slab depressurization systems (SSDs) were placed in homes to mitigate vapor intrusion concerns (Navy, 2009c).

From May through November 2009, indoor air monitoring was conducted to evaluate the mitigation measures implemented in homes and monitor air quality (Tetra Tech, 2009d and e, 2010). In December 2009, construction of the SVE Containment System along the eastern boundary of Navy property was completed. System start up activities began in late December

2009 and was finished in early January 2010. The SVE Containment System continues to operate at Site 1.

Indoor air monitoring activities continued through February 2011, with sampling events conducted in March, July, August, November 2010, and February 2011. The results are presented in the June 2011 Data Summary Report and Home Evaluation (Tetra Tech, 2011b). By November 2010, all indoor air concentrations were below the New York State Department of Health (NYSDOH) air guideline values (NYSDOH, 2006). Also, based on the comparison of the sub-slab soil vapor and indoor air results to the NYSDOH decision matrices, no further action (NFA) was the recommended action for all of the homes with only the SVE Containment System in operation. The VOC concentrations in soil gas (SVPMs) and the sub-slab samples collected in the homes have shown consistent decreasing trends. VOC reductions ranged from 99.98% to 99.99% for trichloroethene (TCE), tetrachloroethene (PCE), and 1, 1, 1-trichloroethane (TCA) in the sub-slab and corresponding soil gas locations.

The results of pressure measurements collected from the offsite SVPMs and from the sub-slab locations in the homes combined with the decrease observed in VOC concentrations indicate a vacuum field has been established throughout the study area. The pressure measurements collected from SVPMs along 11th Street were consistent with the readings collected from the sub-slab sample points in the homes and demonstrated that a measurable vacuum field had been established. Vacuum measurements along 10th Street were not as consistent, but when coupled with analytical data, confirm that the area is being effectively treated.

The June 2011 Data Summary Report and Home Evaluation provided recommendations to address and monitor offsite soil vapor intrusion, as follows:

- Continue operation of the SVE Containment System
- Add a shallow SVPM to each existing SVPM cluster located in the Town of Oyster Bay right-of ways to better monitor the SVE Containment System vacuum field and track soil vapor conditions under the homes. Install additional clusters of shallow, intermediate, and deep SVPMs in the northern portion of the residential block on both 10th and 11th Streets and repair and/or replace SVPM-2007I on 10th Street (Figure 3).
- Conduct quarterly rounds of pressure measurements from the SVE/SVPMs to monitor the SVE Containment System vacuum field
- Based on the vacuum field and onsite system monitoring, optimize the operation and flow distribution of the SVE Containment System.

- Conduct annual SVPM soil gas sampling for VOCs until the source area has been remediated
- If concentrations of TCE greater than 250 micrograms per cubic meter (µg/m^3) or PCE and TCA greater than 1,000 µg/m^3 are observed in the shallow or intermediate SVPM soil gas samples, re-evaluate SVE Containment System operation, attempt to determine if there is a new source for these detections, and if necessary, re-evaluate soil vapor intrusion sampling in select residential homes.

These conclusions and recommendations were outlined in the June 2011 "Data Summary Report and Home Evaluation, January to March 2011, Soil Vapor Intrusion Investigation, Site 1 – Former Drum Marshalling Area, NWRIP Bethpage" (Tetra Tech 2011b). The report was reviewed by the New York State Department of Environmental Conservation (NYSDEC) and the NYSDOH (Appendix A). This Offsite Vapor Intrusion Monitoring Plan has been developed to ensure the offsite vacuum field is maintained and the SVE Containment System continues to function as the mitigation system for the impacted and potentially impacted homes in the neighborhood.

2.0 OFFSITE SVPM INSTALLATION

Based on an evaluation of the SVE Containment System conducted in February and June 2011, a vacuum field was established throughout the offsite study area (Tetra Tech, 2011b). The vacuum field was confirmed at all samples depths along 11th Street and was more pronounced near the southeast corner of Site 1 and less pronounced near the northeast corner of Site 1. However, the evaluation also determined that additional SVPMs are needed to more effectively monitor the offsite vacuum field. A vacuum field was also verified for the homes on 10th Street, although the readings were close to the limit of the field instrument (0.01 inches of water column [in-wc]).

Currently nine offsite SVPMs are present. Ten new SVPMs will be installed in the offsite residential neighborhood to enhance the SVPM vacuum field monitoring network (Figure 3). Existing SVE and SVPM construction logs are provided in Appendix B and details are summarized on Table 1. The new SVPMs will be installed via direct push technology (DPT) to the targeted depths as described in Table 1. Each of the new locations correspond to soil boring locations advanced during the Phase II soil gas sampling conducted in October 2008 and January 2009 (Tetra Tech, 2009a). The two new SVPM clusters (BPS1-SVPM-2001 and -2006) will be installed on 10th and 11th Streets in the northern portion of the residential block and consist of three SVPMs to depths of 10 feet (shallow – S), 25 feet (intermediate – I), and 45 feet (deep – D). Three shallow SVPMs will be installed at existing SVPM clusters BPS1-SVPM-2003, -2004, and -2007. The existing SVPM, BPS1-SVPM-2007I, which appears to be damaged, will be replaced.

To facilitate the pressure readings and soil gas sampling, installation of each SVPM will consist of placement of a 6-inch long stainless steel soil gas implant to the targeted depths at each location. High-density polyethylene tubing will extend from the implant to the ground surface for measurements and sampling. Between the existing and new SVPMs, implants will be placed at each location as presented on Table 1. The annular space just below and around each implant will be filled with No. 2 sand to a height of approximately 2 or 3 feet above the implant. Granular bentonite will be used as a seal and placed to a minimum thickness of approximately 2 or 3 feet and hydrated to provide a seal in between each soil gas implant. The remainder of the annulus above the shallow implant will be filled with bentonite/cement grout to the ground surface. The end of the poly tubing will have barbed fittings for attaching a pressure gauge and canisters, to obtain vacuum readings and to collect soil gas samples. Each SVPM will be completed with a flush mount well cover.

3.0 SVE CONTAINMENT SYSTEM OFFSITE VACUUM FIELD MONITORING

A total of eighteen offsite SVPMs will be used to monitor the SVE Containment System vacuum field and determine the effectiveness of the system in capturing and containing offsite soil vapors in the residential area east of Site 1. Table 1 presents SVPM construction details for the existing and new monitoring points. Vacuum readings for the existing SVE wells will also be monitored. Pressure readings will be collected on a quarterly basis to confirm and monitor the SVE Containment System vacuum field.

Vacuum/soil vapor pressure measurements will be recorded in inches of water column gauge pressure (in-wc). Field forms for recording pressure measurements, other system information, and soil gas sampling logs are provided in Appendix C.

Gauge pressure is used to evaluate the pressure gradient (pressure or vacuum). These vacuum/pressure readings in the subsurface can be temporarily effected by high and low pressure systems moving through an area. Decreasing atmospheric pressures can result in a temporary positive (or less negative) gauge reading in the subsurface. The time required for soil gas to equilibrate with the atmosphere is dependent on the depth of the sample point, the vertical conductivity of the soil, and the presence of low permeability surface features. As a result, changes in atmospheric pressure during the monitoring period must be considered during evaluation of the data.

As a part of the SVE Containment System monitoring, valve positions will be recorded for each of the SVE wells. The valves are located in the Flow Monitoring Station located in the southeast corner of Site 1 (Figure 3). The Flow Monitoring Station consists of an 8 ft wide x 8 ft tall x 20 ft long Conex box in which all of the SVE lines from the fenceline SVE wells collect into a single manifold and from this location a single underground pipeline has been routed to the Treatment Building. The valves for the five new SVE wells south of Plant #3 are located at each individual SVE well location as presented in Figure 3. These new SVE wells are being operated to help address residual VOCs in onsite soils utilizing excess capacity of the SVE blowers.

In addition to quarterly recording of the pressure and valve positions for the SVE wells, the flow rate will be measured at the main manifold in the Flow Control Station and in the Treatment Building. Data will also be collected on blower operation, pre-carbon temperature, pre-blower pressure, and the presence of condensate in the system piping inside the treatment building.

4.0 OFFSITE SOIL GAS MONITORING

Eighteen soil gas samples will be collected from the SVPMs annually to monitor the continued effectiveness of the SVE Containment System in reducing VOCs in offsite soil vapor in the residential area east of Site 1. Table 1 presents the SVPM construction details for the existing and proposed monitoring points. The SVPM locations are presented on Figure 3. The specific activities for the annual rounds of soil gas sampling will be as follows:

1. Collect flow rate from SVE Containment System at operations building
2. Collect an initial round of vacuum readings from the 18 SVPMs
3. Collect soil gas samples from the 18 SVPMs
4. Collect a second round of vacuum readings from the 18 SVPMs

Sample nomenclature and analysis for the soil gas sampling are presented in Table 2. The field sampling team will maintain a Soil Gas Sample Log Sheet, as presented in Appendix C, for each sample collected. Other pertinent information regarding sample identification or sample collection will be recorded in the field logbook.

The soil gas sampling procedures for each SVPM will be as follows:

1. Connect valve assembly to the sampling port of the SVPM.

2. Connect a vacuum pump to the valve assembly. Purge 2500 to 3000 milliliter (mL) volumes of air from the SVPM using the vacuum pump at a rate of approximately 100 to 200 milliliter per minute (mL/min).

3. Record on the Soil Gas Sample Log Sheet and/or field notebook the flow controller number with the appropriate SUMMA® canister number. Isolate vacuum pump and collect soil gas sample with SUMMA® canister.

SUMMA® canisters will be utilized for collecting all soil gas samples. The soil gas samples will be obtained over a 30-minute time period. SUMMA® canisters will be shipped to the laboratory via overnight carrier (e.g., Federal Express) for analysis.

Ambient air samples will also be collected simultaneously during the soil gas sampling to evaluate potential chemicals in the local ambient air. The SUMMA® canister will be positioned at an upwind location at a height of 4 ft above grade. The ambient air sample will be obtained over an eight-hour period. If SVPM sampling takes more than one day, an additional ambient air sample may be collected. Ambient air samples will be shipped to the laboratory as described above.

The soil gas samples will be analyzed for the site specific compound list: 1,1-dichloroethane (DCA) , 1,1-dichloroethene (DCE), TCA, 1,2-dichloroethane, cis-1,2-dichloroethene, trans-1,2-dichloroethene, TCE, PCE, vinyl chloride; and in accordance to United States Environmental Protection Agency (USEPA) Method TO-15 VOCs by an Environmental Laboratory Approval Program (ELAP) certified laboratory (USEPA, 1999).

5.0 REPORTING

SVPM readings will be reported in the quarterly OM&M reports. The results of the annual soil gas monitoring, including system performance details, field documentation, sampling sheets, and other operational information collected during the operation, monitoring, and maintenance of the SVE Containment System will be reported in the annual monitoring report.

REFERENCES

New York State Department of Health (NYSDOH), 2006. Final Guidance for Evaluating Soil Vapor Intrusion in the State of New York. October.

Tetra Tech EC, Inc. (Tetra Tech), 2010. Final Operation and Maintenance Plan for Soil Vapor Extraction Containment System, Site 1 – Former Drum Marshalling Yard. Naval Weapons Industrial Reserve Plant, Bethpage, New York. June.

Tetra Tech NUS, Inc. (Tetra Tech), 2008. Site 1-Soil Vapor Investigation. Naval Weapons Industrial Reserve Plant, Bethpage, New York. April.

Tetra Tech NUS, Inc. (Tetra Tech), 2009a. Site 1 – Phase II Soil Vapor Report, Site 1 – Former Drum Marshalling Area. Naval Weapons Industrial Reserve Plant, Bethpage, New York. August.

Tetra Tech NUS, Inc. (Tetra Tech), 2009b. Data Summary Report Soil Vapor Intrusion Investigation, Site 1 – Former Drum Marshalling Area. Naval Weapons Industrial Reserve Plant, Bethpage, New York. August.

Tetra Tech NUS, Inc. (Tetra Tech), 2009d. Quarterly Data Summary Report Indoor Air and SSD Monitoring (May, June, and July 2009) Site 1 - Former Drum Marshalling Area, Naval Weapons Industrial Reserve Plant, Bethpage, New York. October.

Tetra Tech NUS, Inc. (Tetra Tech), 2009e. Quarterly Data Summary Report Indoor Air and SSD Monitoring (August, September, and October 2009) Site 1 - Former Drum Marshalling Area, Naval Weapons Industrial Reserve Plant, Bethpage, New York. December.

Tetra Tech NUS, Inc. (Tetra Tech), 2010. Quarterly Data Summary Report Soil Vapor Intrusion Monitoring (November and December 2009, and January 2010). Site 1 - Former Drum Marshalling Area, Naval Weapons Industrial Reserve Plant, Bethpage, New York. February.

Tetra Tech NUS, Inc. (Tetra Tech), 2011a. Modification to Existing SVE Containment System, Site 1 – Former Drum Marshalling Area. Naval Weapons Industrial Reserve Plant, Bethpage, New York. September.

Tetra Tech NUS, Inc. (Tetra Tech), 2011b. Data Summary Report and Home Evaluation (January - March 2011) Soil Vapor Intrusion Investigation Site 1 - Former Drum Marshalling Area Naval Weapons Industrial Reserve Plant, Bethpage, New York, June.

United States Environmental Protection Agency (USEPA), 1999. Compendium of Methods for the Determination of Toxic Organic Compounds in Ambient Air Second Edition Compendium Method TO-15 Determination Of Volatile Organic Compounds (VOCs) In Air Collected In Specially-Prepared Canisters And Analyzed By Gas Chromatography/ Mass Spectrometry (GC/MS). January.

United States Environmental Protection Agency (USEPA), 2008. EPA Regional Screening Levels for Residential Air, Oak Ridge National Laboratory (ORNL), updated September 2008, retrieved from the EPA website, http://www.epa.gov/reg3hwmd/risk/human/rb-concentration_table/index.htm

U.S. Navy. (Navy), 2009c. Time Critical Removal Action – Off Site Soil Vapor Intrusion Site 1-Former Drum Marshalling Area Naval Weapons Industrial Reserve Plant Bethpage, New York, June.

TABLES

TABLE 1
SVE AND SVPM CONSTRUCTION DETAILS
SITE 1 - FORMER DRUM MARSHALLING AREA
NWIRP BETHPAGE, NEW YORK

LOCATION	LOCATION ID	TYPE	STATUS	DEPTH
11th Street	BPS1-SVPM2001S	SVPM	New	8-10
	BPS1-SVPM2001I	SVPM	New	23-25
	BPS1-SVPM2001D	SVPM	New	43-45
11th Street	BPS1-SVPM2002S	SVPM	Existing	8-10
	BPS1-SVPM2002I	SVPM	Existing	23-25
	BPS1-SVPM2002D	SVPM	Existing	42-44
11th Street	BPS1-SVPM2003S	SVPM	New	8-10
	BPS1-SVPM2003I	SVPM	Existing	23-25
	BPS1-SVPM2003D	SVPM	Existing	43-45
Sycamore Avenue	BPS1-SVPM2004S	SVPM	New	8-10
	BPS1-SVPM2004I	SVPM	Existing	23.5-25.5
	BPS1-SVPM2004D	SVPM	Existing	40-42
10th Street	BPS1-SVPM2006S	SVPM	New	8-10
	BPS1-SVPM2006I	SVPM	New	23-25
	BPS1-SVPM2006D	SVPM	New	43-45
10th Street	BPS1-SVPM2007S	SVPM	New	8-10
	BPS1-SVPM2007IR	SVPM	Replacement	23-25
	BPS1-SVPM2007D	SVPM	Existing	40-42
Onsite Fenceline	SVE 101I	SVE Well	Existing	25-35
Onsite Fenceline	SVE 101D	SVE Well	Existing	40-60
Onsite Fenceline	SVE 102I	SVE Well	Existing	25-35
Onsite Fenceline	SVE 102D	SVE Well	Existing	40-60
Onsite Fenceline	SVE 103I	SVE Well	Existing	25-35
Onsite Fenceline	SVE 103D	SVE Well	Existing	40-60
Onsite Fenceline	SVE 104I	SVE Well	Existing	25-35
Onsite Fenceline	SVE 104D	SVE Well	Existing	40-60
Onsite Fenceline	SVE 105I	SVE Well	Existing	25-35
Onsite Fenceline	SVE 105D	SVE Well	Existing	40-60
Onsite Fenceline	SVE 106I	SVE Well	Existing	25-35
Onsite Fenceline	SVE 106D	SVE Well	Existing	40-60
Onsite	SVE 107	SVE Well	Existing	33-53
Onsite	SVE 108	SVE Well	Existing	33-53
Onsite	SVE 109	SVE Well	Existing	34-54
Onsite	SVE 110	SVE Well	Existing	33-53
Onsite	SVE 111	SVE Well	Existing	38-58

SVE: Soil Vapor Extraction Well
SVPM: Soil Vapor Pressure Monitoring

TABLE 2
OFFSITE SOIL GAS MONITORING
SAMPLE NOMENCLATURE AND ANALYTICAL METHOD
SITE 1 - FORMER DRUM MARSHALLING AREA
NWIRP BETHPAGE, NEW YORK

Location	Sample ID	Matrix	VOCs-TO15A [(1)]
SVPM 2001	BPS1-SVPM2001S-XXXXXX	Air	1
	BPS1-SVPM2001I-XXXXXX	Air	1
	BPS1-SVPM2001D-XXXXXX	Air	1
SVPM 2002	BPS1-SVPM2002S-XXXXXX	Air	1
	BPS1-SVPM2002I-XXXXXX	Air	1
	BPS1-SVPM2002D-XXXXXX	Air	1
SVPM 2003	BPS1-SVPM2003S-XXXXXX	Air	1
	BPS1-SVPM2003I-XXXXXX	Air	1
	BPS1-SVPM2003D-XXXXXX	Air	1
SVPM 2004	BPS1-SVPM2004S-XXXXXX	Air	1
	BPS1-SVPM2004I-XXXXXX	Air	1
	BPS1-SVPM2004D-XXXXXX	Air	1
SVPM 2006	BPS1-SVPM2006S-XXXXXX	Air	1
	BPS1-SVPM2006I-XXXXXX	Air	1
	BPS1-SVPM2006D-XXXXXX	Air	1
SVPM 2007	BPS1-SVPM2007S-XXXXXX	Air	1
	BPS1-SVPM2007IR-XXXXXX	Air	1
	BPS1-SVPM2007D-XXXXXX	Air	1
Duplicate (SVPM)	BPS1-DUP01	Air	1
Duplicate (SVPM)	BPS1-DUP02	Air	1
Field Blank	BPS1-FB2001-XXXXXX	Air	1
Field Blank	BPS1-FB2002-XXXXXX	Air	1

VOCs: Volatile organic compounds. (Site specific list: 1,1-dichloroethane, 1,1-dichloroethene, 1,1,1-trichloroethane, 1,2-dichloroethane, cis-1,2-dichloroethene, trans-1,2-dichloroethene, trichloroethene, tetrachloroethene, vinyl chloride)

XXXXXX: Sample date. For example, BPS1-SVPM2004D-082610, would be collected on August 26, 2010.

1 : 21-Day results from Navy-approved laboratory via method TO-15.

DUP: Duplicate sample

SVPM: Soil Vapor Pressure Monitoring

FB: Field Blank (Ambient Air Sample)

FIGURES

112G00622\0510\112G00622CM01.DWG 08/02/10 MKB

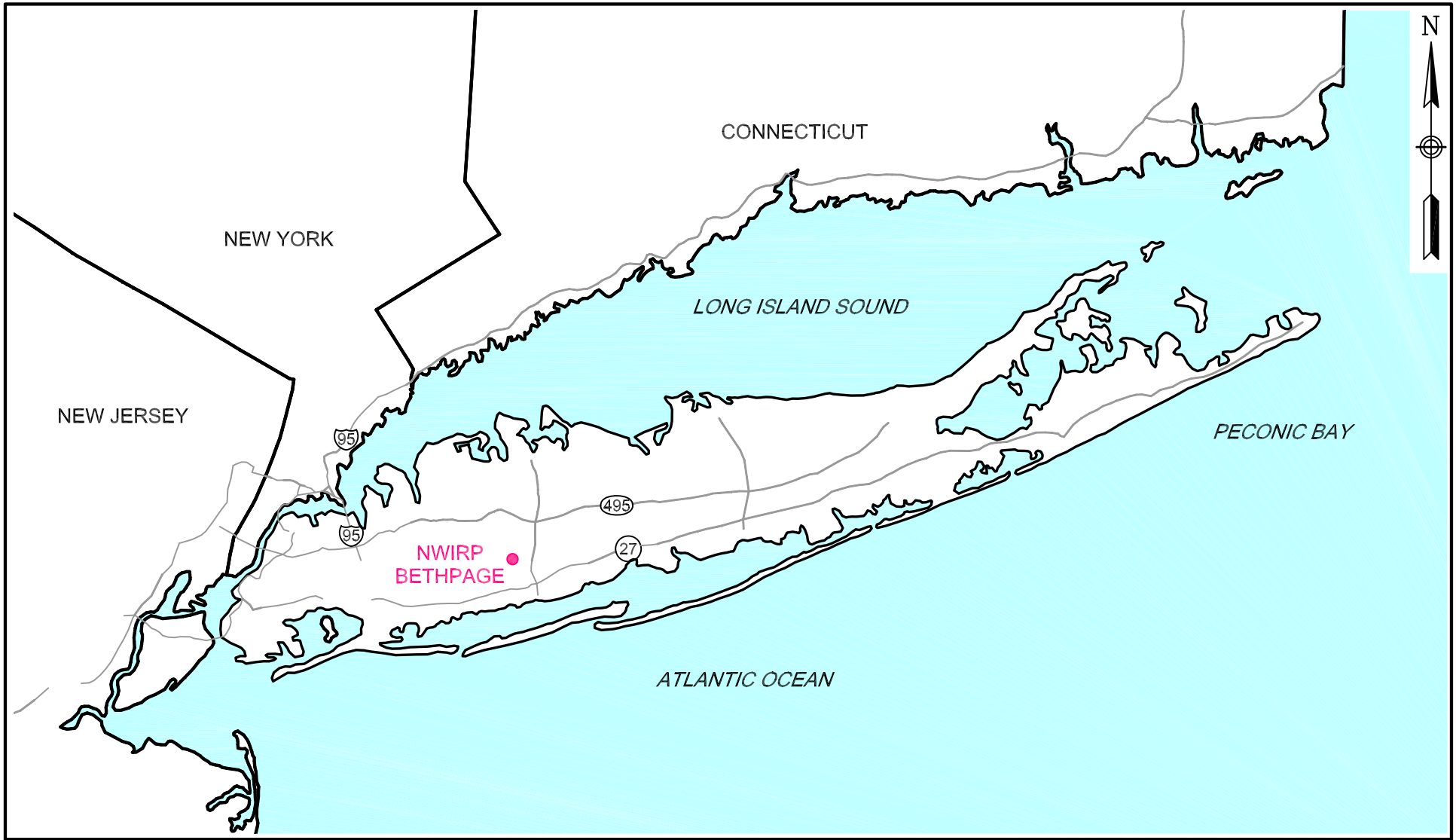

0 15 30
SCALE IN MILES

TETRA TECHNUS, INC.

GENERAL LOCATION MAP
NWIRP BETHPAGE
BETHPAGE, NEW YORK

SCALE	NOT TO SCALE
FILE	112G00622CM01
REV 0	DATE 08/02/10
FIGURE NUMBER	FIGURE 1

112G01687/0510/112G01687CM02.DWG 04/14/09 MKB

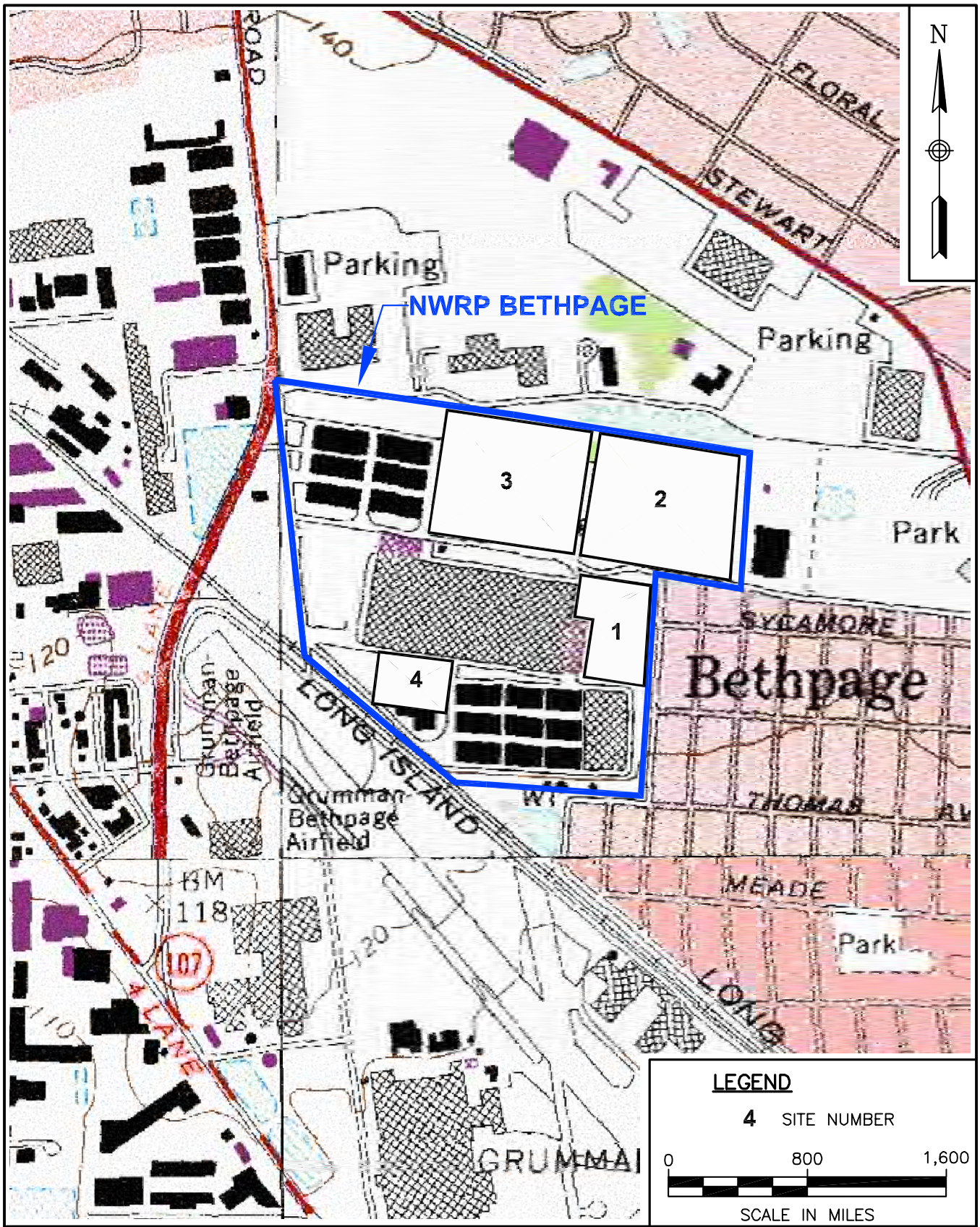

TETRA TECHNUS, INC.

SITE LOCATION MAP
SITE 1
NWIRP
BETHPAGE, NEW YORK

SCALE	AS NOTED
FILE	112G01687CM02
REV 0	DATE 04/14/09
FIGURE NUMBER	FIGURE 2

nor p:\GIS files\Bethpage\Map DOCS\MXD\ROB SVPMI 11142011.mxd MC 120611

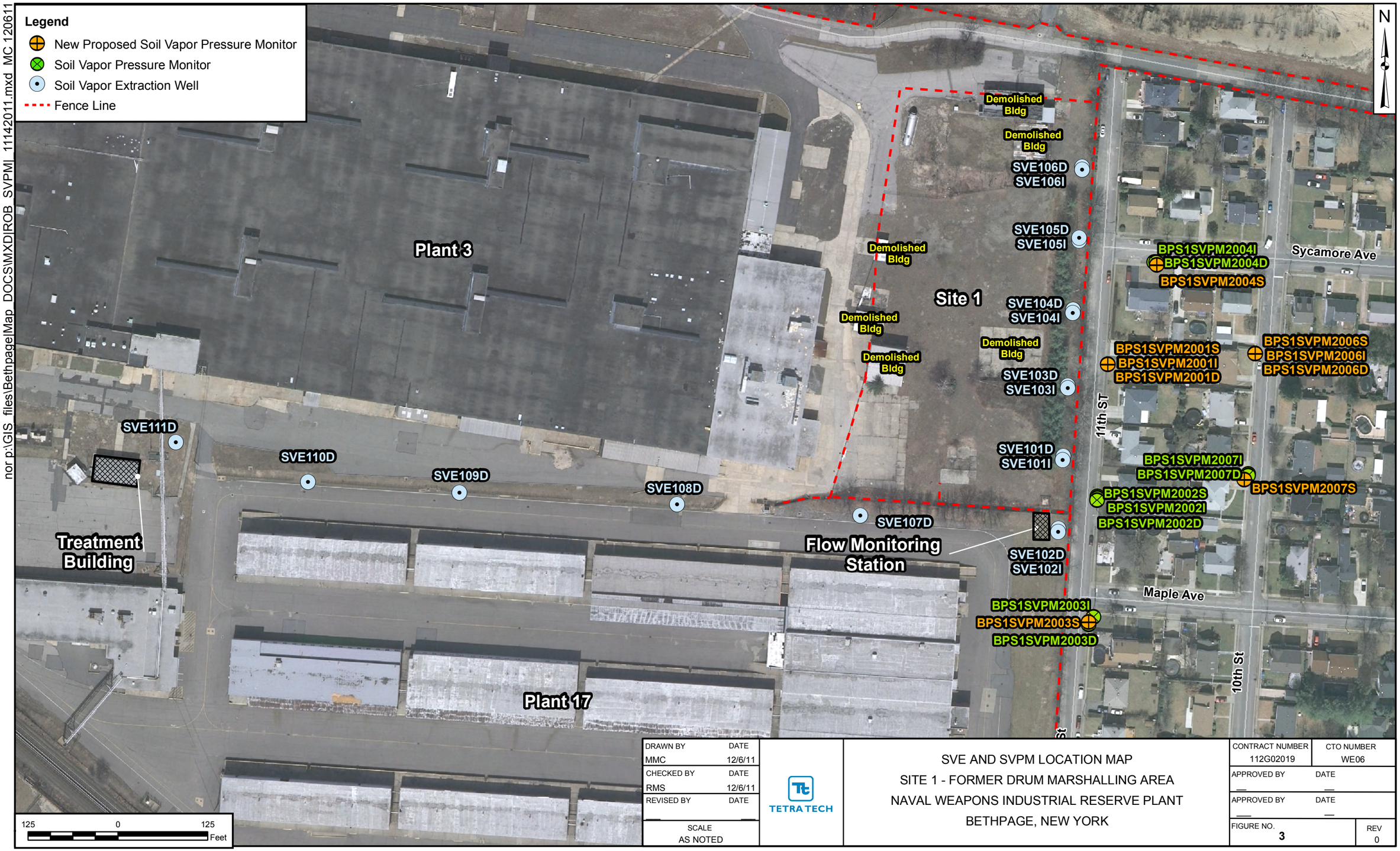

DRAWN BY	DATE
MMC	12/6/11
CHECKED BY	DATE
RMS	12/6/11
REVISED BY	DATE
SCALE	
AS NOTED	

TETRA TECH

SVE AND SVPM LOCATION MAP
SITE 1 - FORMER DRUM MARSHALLING AREA
NAVAL WEAPONS INDUSTRIAL RESERVE PLANT
BETHPAGE, NEW YORK

CONTRACT NUMBER	CTO NUMBER
112G02019	WE06
APPROVED BY	DATE
APPROVED BY	DATE
FIGURE NO. 3	REV 0

APPENDICES

APPENDIX A
NYSDEC LETTER

New York State Department of Environmental Conservation
Division of Environmental Remediation
Remedial Bureau A, 11th Floor
625 Broadway, Albany, New York 12233-7015
Phone: (518) 402-9620 • **Fax:** (518) 402-9022
Website: www.dec.ny.gov

Joe Martens
Commissioner

July 27, 2011

Lora Fly
Naval Facilities Engineering Command MidLant
Building Z-144
9742 Maryland Avenue
Norfolk, VA 23511-3095

RE: Naval Weapons Industrial Reserve Plant
Site Bethpage, Nassau County NYSDEC site
No.1-30-003B.

Dear Ms. Fly:

The Naval Facilities Engineering Command Midlant has submitted a document entitled "Data Summary Report and Home Evaluation, January to March 2011, Soil Vapor Intrusion Investigation, Site 1-Former Drum Marshalling Area, NWIRP Bethpage, June 2011." This report has been reviewed by the New York State Department of Environmental Conservation (NYSDEC) and the New York State Department of Health (NYSDOH). By means of this letter, the NYSDEC approves the Data Summary Report and has the following comments to be included in the Operation, Maintenance and Monitoring (OMM) and ultimate removal of the air purifying units and sub-slab depressurization systems related to Site 1 Former Drum Marshalling Area of the NWIRP Bethpage facility.

1. Since the Site 1 Soil Vapor Extraction (SVE) system will be acting as the sole soil vapor intrusion mitigation system for impacted or potentially impacted homes, the engineer should include a system of periodic pressure differential measurements that confirms the potential for soil vapor intrusion to impact the homes continues to be mitigated.

2. The soil vapor extraction system in place at Site 1has a formal operations, monitoring and maintenance (OM&M) plan in place for the machinery associated with SVE system that does not include sampling to evaluate monitoring the SSD systems mitigation of the potential for soil vapor intrusion. Therefore, an OM&M plan should be developed and submitted documenting the basic procedures and schedule for conducting pressure measurements and sampling of the soil vapor pressure monitoring points, for the measurements of pressure differentials and/or any additional recommendations of the engineer.

Overall the NYSDEC and the NYSDOH concur with the report's recommendations that there is no longer a need for the Navy to support the operation of air purifying units and sub-slab depressurization systems installed in these homes, and that these systems can be removed at the request of the home owner. The scope of activities and the sampling frequency cited are adequate, with the addition of the appropriate pressure differential readings and/or additional recommendations of the engineer, to be submitted in the OMM plan to be put in place, to ensure that the SVE system is functioning as the soil vapor intrusion mitigation system for the impacted and potentially impacted homes in the area.

In the meantime, if you have any questions, please contact me directly at (518)402-9620.

Sincerely,

Steven M. Scharf, P.E.
Project Engineer
Remedial Bureau A
Division of Environmental Remediation

ecc: J. Swartwout/S. Scharf/File
W. Parish, Region 1
S. Karpinski, NYSDOH
J. De Franco NCDHS
C. Stein, USEPA
D. Brayack, Tetra Tech NUS
R. Sok, Tetra Tech NUS
EDOCS:13003B-Vapor Intrusion: June 2011Data Summary Report Comment Letter

APPENDIX B
SVPM AND SVE CONSTRUCTION LOGS

Tetra Tech NUS, Inc. **TEMPORARY WELL SHEET**

BORING NO.: 2002S

PROJECT:	NWIRP Bethpage II	DRILLING Co.:	Zebra	BORING No.:	BPSI-PZ 2002S
PROJECT No.:	112G01687	DRILLER:	MORAITIS	DATE COMPLETED:	1/7/09
SITE:	Site 1	DRILLING METHOD	DPT	NORTHING:	NA
GEOLOGIST:	Conti	DEV. METHOD:	NA	EASTING:	NA

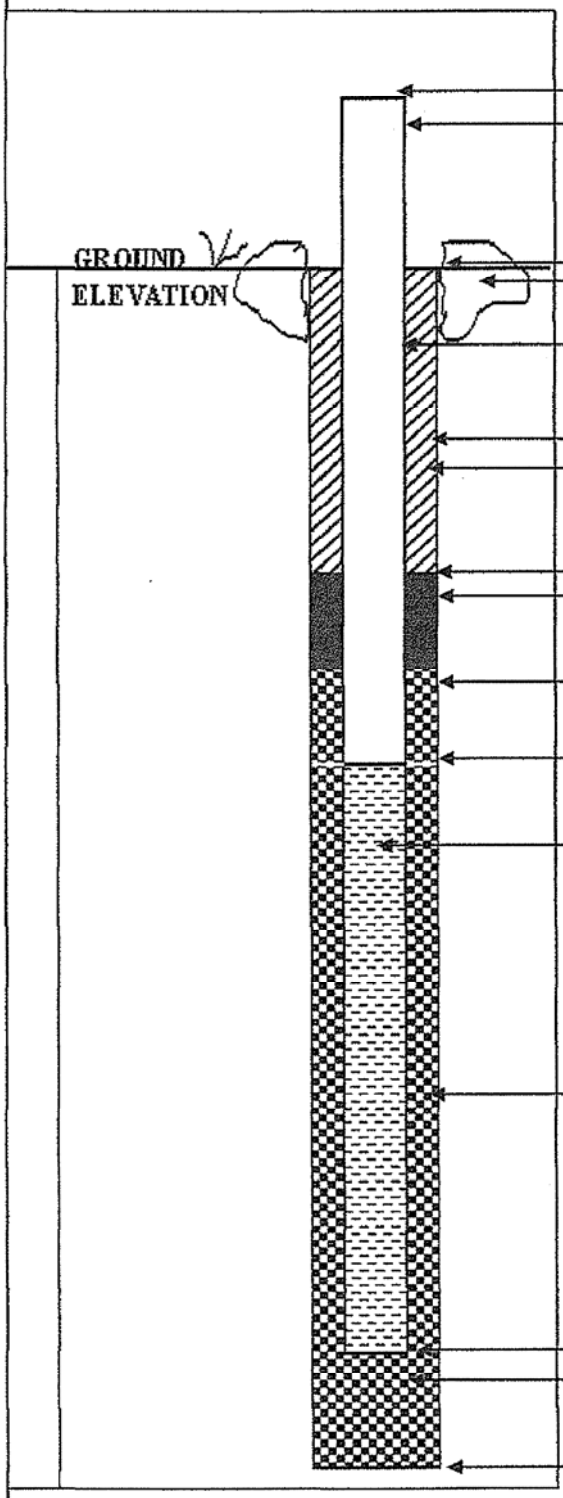

ELEVATION OF TOP OF RISER PIPE: —

RISER STICK-UP ABOVE GROUND SURFACE: 0

GROUND ELEVATION: NA

TYPE OF SURFACE SEAL: NA

RISER PIPE I.D.: 1"

TYPE OF RISER PIPE: PVC

BOREHOLE DIAMETER: 2 1/4"

TYPE OF SEAL: SAND

ELEVATION / DEPTH OF SEAL: 12

TYPE OF SEAL: SAND/ BENTONITE

ELEVATION / DEPTH TOP OF FILTER PACK: 15

ELEVATION / DEPTH TOP OF SCREEN: 18

TYPE OF SCREEN: PVC

SLOT SIZE X LENGTH: 10SL x 2'

I.D. OF SCREEN: 1"

TYPE OF FILTER PACK: #1 SAND

ELEVATION / DEPTH BOTTOM OF SCREEN: 110

ELEVATION / DEPTH BOTTOM OF FILTER PACK: 110

TYPE OF BACKFILL BELOW WELL: NA

ELEVATION / DEPTH OF BOREHOLE: 110

BORING NO.: 2002 I

Tetra Tech NUS, Inc. **TEMPORARY WELL SHEET**

PROJECT:	NWIRP Bethpage II	DRILLING Co.:	Zebra	BORING No.:	BPS1-PZ2002I
PROJECT No.:	112G01687	DRILLER:	MORAITIS	DATE COMPLETED:	1/7/09
SITE:	Site 1	DRILLING METHOD	DPT	NORTHING:	NA
GEOLOGIST:	Conti	DEV. METHOD:	NA	EASTING:	NA

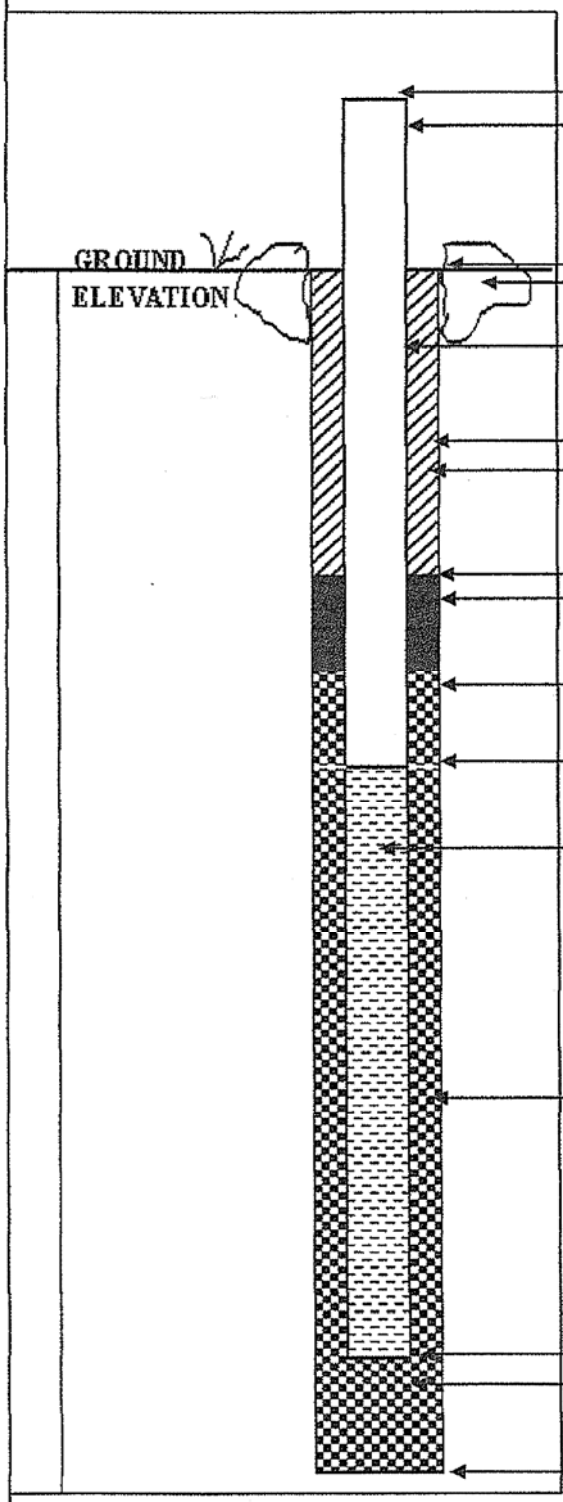

ELEVATION OF TOP OF RISER PIPE: —

RISER STICK-UP ABOVE GROUND SURFACE: 0

GROUND ELEVATION: NA

TYPE OF SURFACE SEAL: NA

RISER PIPE I.D.: 1"

TYPE OF RISER PIPE: PVC

BOREHOLE DIAMETER: 2¼

TYPE OF SEAL: SAND

ELEVATION / DEPTH OF SEAL: 18

TYPE OF SEAL: BENTONITE/SAND

ELEVATION / DEPTH TOP OF FILTER PACK: 18

ELEVATION / DEPTH TOP OF SCREEN: 23

TYPE OF SCREEN: PVC

SLOT SIZE X LENGTH: 10 SL x 2'

I.D. OF SCREEN: 1"

TYPE OF FILTER PACK: #1 SAND

ELEVATION / DEPTH BOTTOM OF SCREEN: 25

ELEVATION / DEPTH BOTTOM OF FILTER PACK: 25

TYPE OF BACKFILL BELOW WELL: NA

ELEVATION / DEPTH OF BOREHOLE: 25

BORING NO.: 2002D

Tetra Tech NUS, Inc. **TEMPORARY WELL SHEET**

PROJECT:	NWIRP Bethpage II	DRILLING Co.:	Zebra	BORING No.:	BPS1-PZ2002D
PROJECT No.:	112G01687	DRILLER:	MORAMS	DATE COMPLETED:	1/7/09
SITE:	Site 1	DRILLING METHOD	DPT	NORTHING:	NA
GEOLOGIST:	Conti	DEV. METHOD:	NA	EASTING:	NA

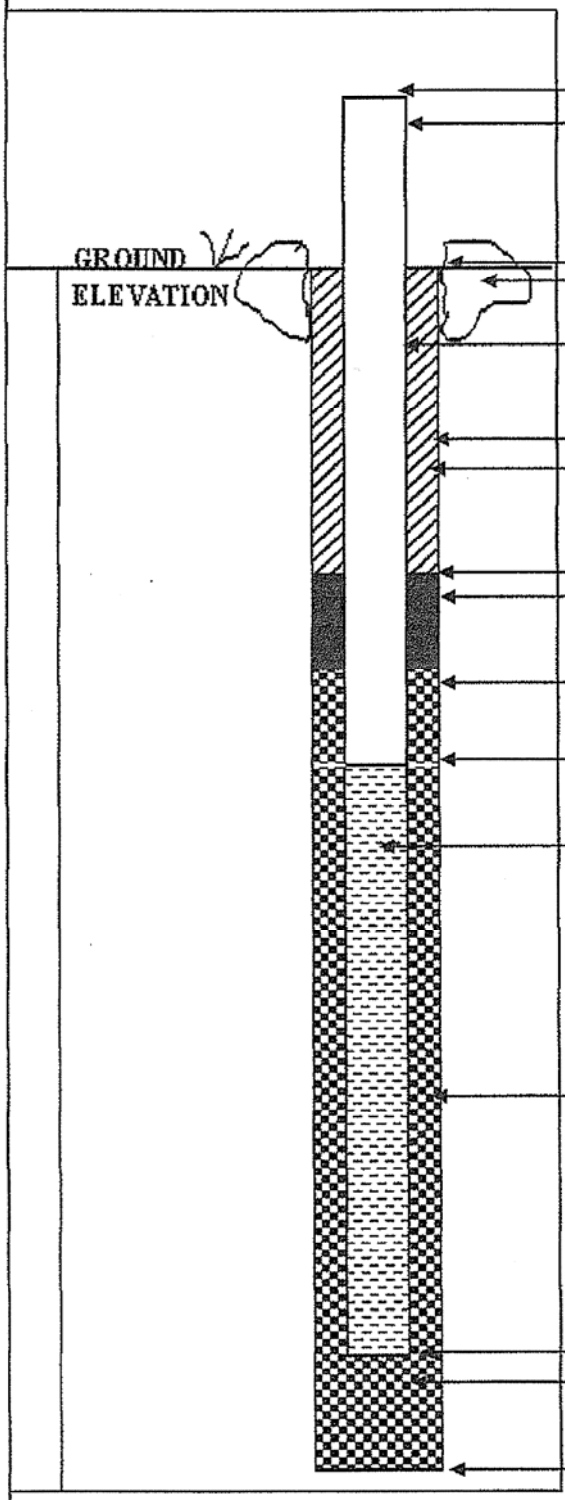

ELEVATION OF TOP OF RISER PIPE: –

RISER STICK-UP ABOVE GROUND SURFACE: 0

GROUND ELEVATION: NA

TYPE OF SURFACE SEAL: NA

RISER PIPE I.D.: 1"

TYPE OF RISER PIPE: PVC

BOREHOLE DIAMETER: 2¼

TYPE OF SEAL: SAND

ELEVATION / DEPTH OF SEAL: 127

TYPE OF SEAL: SAND/BENTONITE

ELEVATION / DEPTH TOP OF FILTER PACK: 137

ELEVATION / DEPTH TOP OF SCREEN: 142

TYPE OF SCREEN: PVC

SLOT SIZE X LENGTH: 10 SL x 2'

I.D. OF SCREEN: 1"

TYPE OF FILTER PACK: SAND #1

ELEVATION / DEPTH BOTTOM OF SCREEN: 144

ELEVATION / DEPTH BOTTOM OF FILTER PACK: 144

TYPE OF BACKFILL BELOW WELL: NA

ELEVATION / DEPTH OF BOREHOLE: 144

BORING NO.: 2003I

Tetra Tech NUS, Inc. **TEMPORARY WELL SHEET**

PROJECT:	NWIRP Bethpage II	DRILLING Co.:	Zebra	BORING No.:	BPSI-PZ 2003I
PROJECT No.:	112G01687	DRILLER:	MORAITIS	DATE COMPLETED:	1/6/09
SITE:	Site 1	DRILLING METHOD	DPT	NORTHING:	NA
GEOLOGIST:	Conti	DEV. METHOD:	—	EASTING:	NA

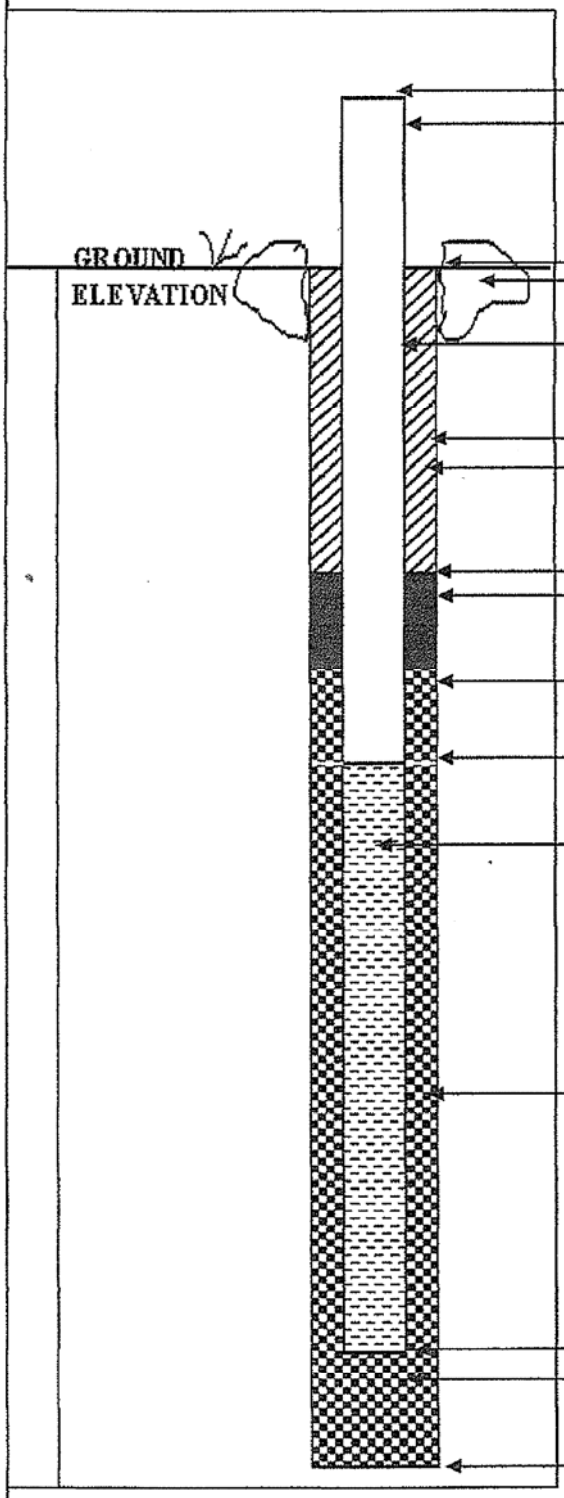

ELEVATION OF TOP OF RISER PIPE: –

RISER STICK-UP ABOVE GROUND SURFACE: 0

GROUND ELEVATION: NA

TYPE OF SURFACE SEAL: NA

RISER PIPE I.D.: 1"

TYPE OF RISER PIPE: PVC

BOREHOLE DIAMETER: 2¼"

TYPE OF SEAL:

ELEVATION / DEPTH OF SEAL: 18

TYPE OF SEAL: SAND/BENTONITE

ELEVATION / DEPTH TOP OF FILTER PACK: 118

ELEVATION / DEPTH TOP OF SCREEN: 123

TYPE OF SCREEN: PVC

SLOT SIZE X LENGTH: 10 SLX 2'

I.D. OF SCREEN: 1"

TYPE OF FILTER PACK: #1 SAND

ELEVATION / DEPTH BOTTOM OF SCREEN: 125

ELEVATION / DEPTH BOTTOM OF FILTER PACK: 125

TYPE OF BACKFILL BELOW WELL: NA

ELEVATION / DEPTH OF BOREHOLE: 125

BORING NO.: 2003D

Tetra Tech NUS, Inc. **TEMPORARY WELL SHEET**

PROJECT:	NWIRP Bethpage II	DRILLING Co.:	Zebra	BORING No.:	BPSI-PZ2003D
PROJECT No.:	112G01687	DRILLER:	MORAITIS	DATE COMPLETED:	1/6/09
SITE:	Site 1	DRILLING METHOD	DPT	NORTHING:	NA
GEOLOGIST:	Conti	DEV. METHOD:	—	EASTING:	NA

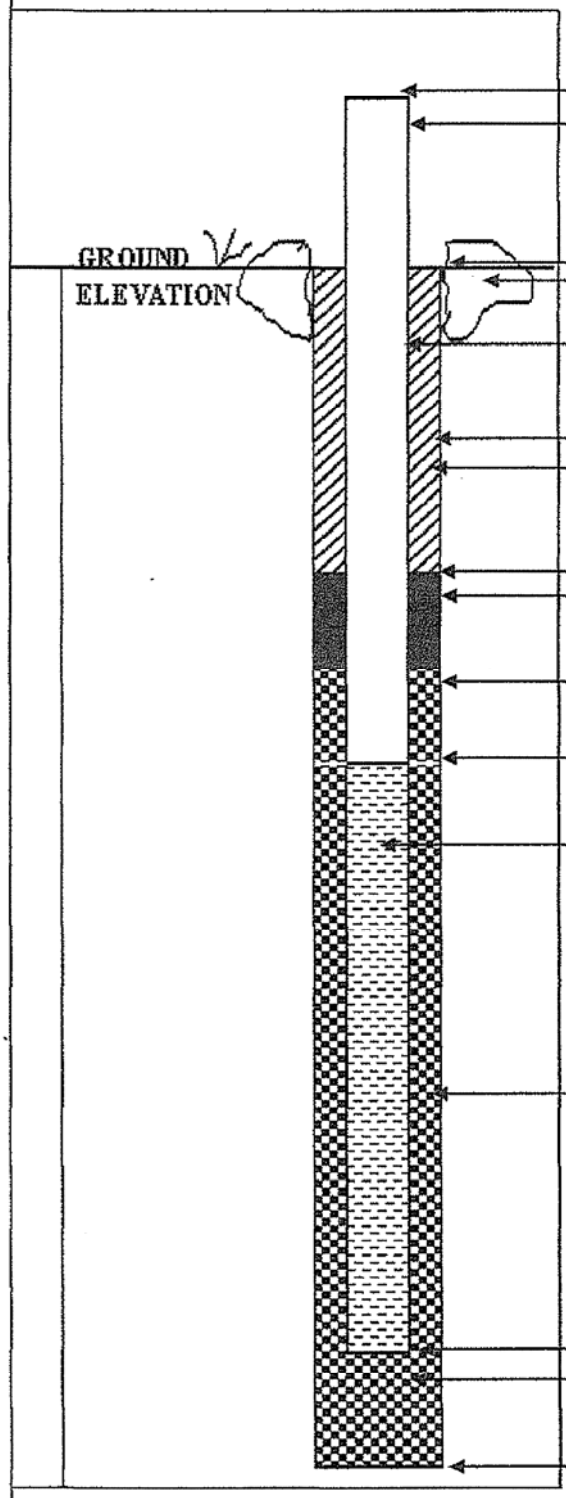

ELEVATION OF TOP OF RISER PIPE: –

RISER STICK-UP ABOVE GROUND SURFACE: 0

GROUND ELEVATION: NA

TYPE OF SURFACE SEAL: NA

RISER PIPE I.D.: 1"

TYPE OF RISER PIPE: PVC

BOREHOLE DIAMETER: 2¼"

TYPE OF SEAL: SAND

ELEVATION / DEPTH OF SEAL: 128

TYPE OF SEAL: SAND/BENTONITE

ELEVATION / DEPTH TOP OF FILTER PACK: 138

ELEVATION / DEPTH TOP OF SCREEN: 143

TYPE OF SCREEN: PVC

SLOT SIZE X LENGTH: 10SL x 2'

I.D. OF SCREEN: 1"

TYPE OF FILTER PACK: SAND #1

ELEVATION / DEPTH BOTTOM OF SCREEN: 145

ELEVATION / DEPTH BOTTOM OF FILTER PACK: 145

TYPE OF BACKFILL BELOW WELL: NA

ELEVATION / DEPTH OF BOREHOLE: 145

PROJECT NWIRP – BETHPAGE SITE 1

JOB NO. 106–3570

DRILLING SUBCONTRACTOR DELTA WELL AND PUMP CO.

DRILLER J. GUECI

DRILLING METHOD HSA

WELL NO. SVPM–2004I

DATE OF WELL INSTALLATION 10–12–09

DATE OF WELL DEVELOPMENT N/A

GEOLOGIST C. JOBLON/TTECI

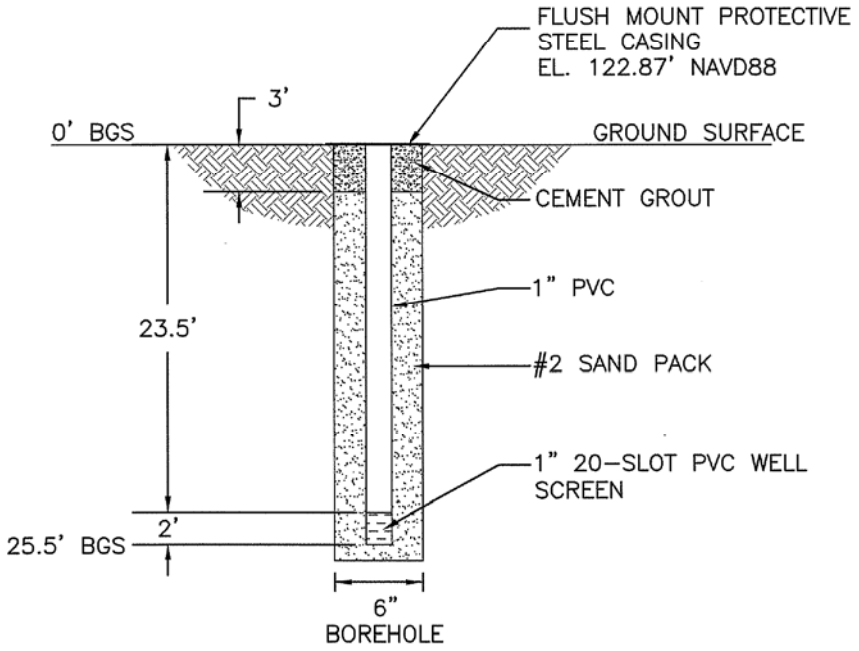

NAVAL FACILITIES ENGINEERING COMMAND
MID–ATLANTIC

NWIRP BETHPAGE SITE 1
SVE CONTAINMENT SYSTEM

INTERMEDIATE SOIL VAPOR MONITORING POINT
CONSTRUCTION DIAGRAM – SVPM–2004I

TETRA TECH EC, INC.

PROJECT NWIRP – BETHPAGE SITE 1

JOB NO. 106–3570

DRILLING SUBCONTRACTOR DELTA WELL AND PUMP CO.

DRILLER J. GUECI

DRILLING METHOD HSA

WELL NO. SVPM–2004D

DATE OF WELL INSTALLATION 10–12–09

DATE OF WELL DEVELOPMENT N/A

GEOLOGIST C. JOBLON/TTECI

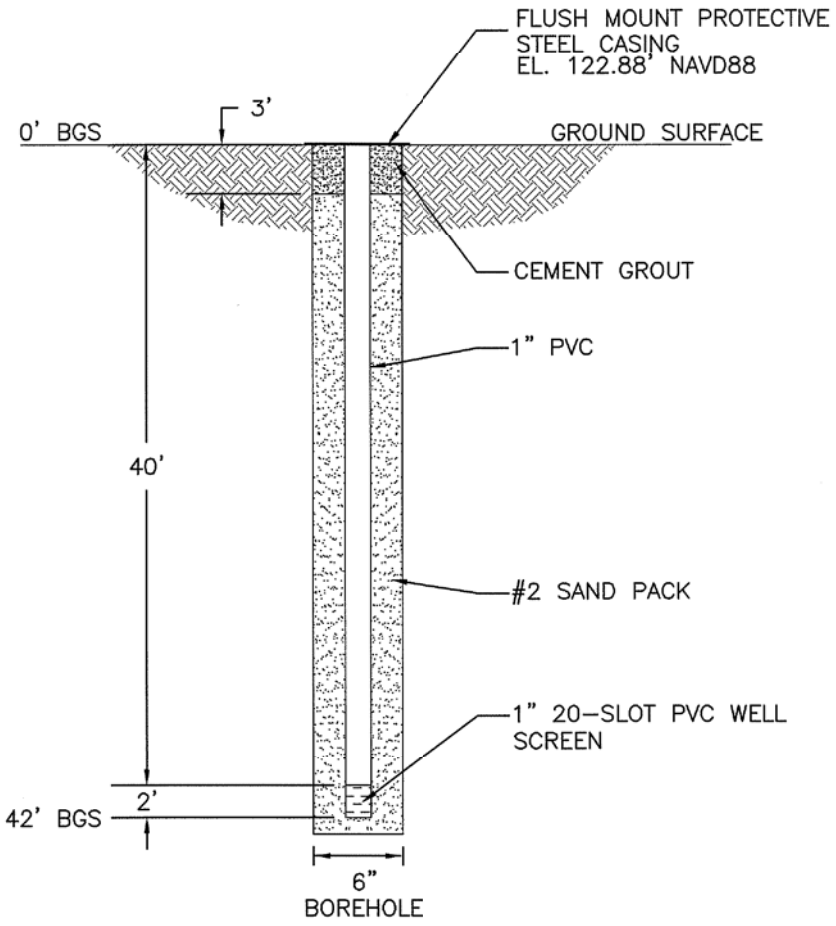

NAVAL FACILITIES ENGINEERING COMMAND
MID–ATLANTIC

NWIRP BETHPAGE SITE 1
SVE CONTAINMENT SYSTEM

DEEP SOIL VAPOR MONITORING POINT
CONSTRUCTION DIAGRAM – SVPM–2004D

TETRA TECH EC, INC.

BORING NO.: 2007I

Tetra Tech NUS, Inc. **TEMPORARY WELL SHEET**

PROJECT:	NWIRP Bethpage II	DRILLING Co.:	Zebra	BORING No.:	BPS1-PZ2007I
PROJECT No.:	112G01687	DRILLER:	MORAITIS	DATE COMPLETED:	1/7/09
SITE:	Site 1	DRILLING METHOD	DPT	NORTHING:	NA
GEOLOGIST:	Conti	DEV. METHOD:	–	EASTING:	NA

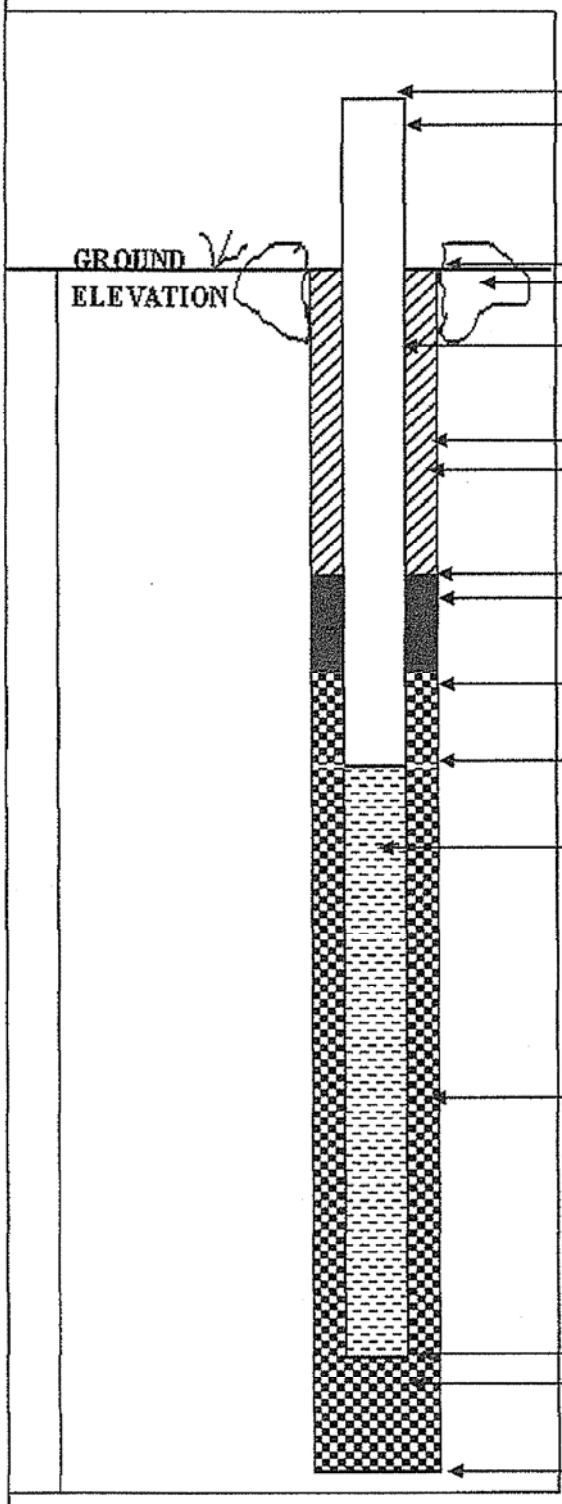

ELEVATION OF TOP OF RISER PIPE: –

RISER STICK-UP ABOVE GROUND SURFACE: 0

GROUND ELEVATION: 0

TYPE OF SURFACE SEAL: NA

RISER PIPE I.D.: 1"

TYPE OF RISER PIPE: PVC

BOREHOLE DIAMETER: 2¼

TYPE OF SEAL: SAND

ELEVATION / DEPTH OF SEAL: 18

TYPE OF SEAL: SAND/BENTONITE

ELEVATION / DEPTH TOP OF FILTER PACK: 118

ELEVATION / DEPTH TOP OF SCREEN: 123

TYPE OF SCREEN: PVC

SLOT SIZE X LENGTH: 10SLX 2'

I.D. OF SCREEN: 1"

TYPE OF FILTER PACK: #1 SAND

ELEVATION / DEPTH BOTTOM OF SCREEN: 125

ELEVATION / DEPTH BOTTOM OF FILTER PACK: 125

TYPE OF BACKFILL BELOW WELL: NA

ELEVATION / DEPTH OF BOREHOLE: 125

BORING NO.: 2007D

Tetra Tech NUS, Inc. **TEMPORARY WELL SHEET**

PROJECT:	NWIRP Bethpage II	DRILLING Co.:	Zebra	BORING No.:	BPSI-PZ2007D
PROJECT No.:	112G01687	DRILLER:	MORANTS	DATE COMPLETED:	1/7/09
SITE:	Site 1	DRILLING METHOD	DPT	NORTHING:	NA
GEOLOGIST:	Conti	DEV. METHOD:	—	EASTING:	NA

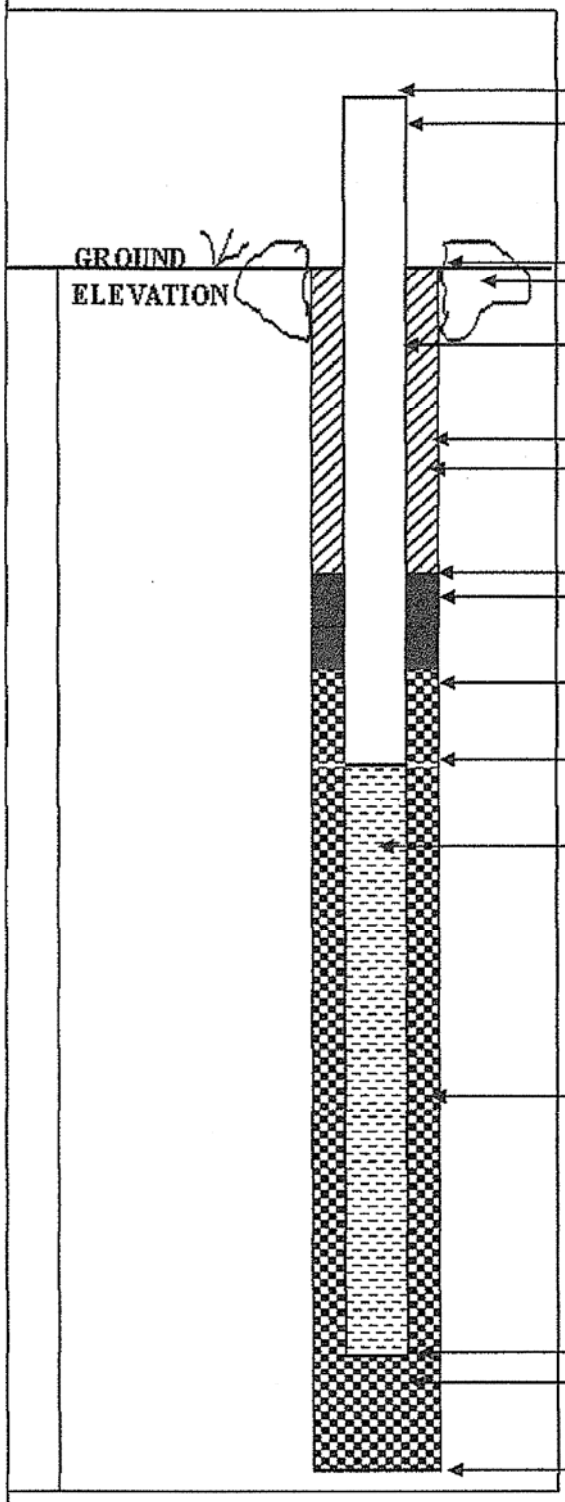

ELEVATION OF TOP OF RISER PIPE: —

RISER STICK-UP ABOVE GROUND SURFACE: 0

GROUND ELEVATION: 0

TYPE OF SURFACE SEAL: NA

RISER PIPE I.D.: 1"

TYPE OF RISER PIPE: PVC

BOREHOLE DIAMETER: 2¼"

TYPE OF SEAL: SAND

ELEVATION / DEPTH OF SEAL: 125

TYPE OF SEAL: SAND/BENTONITE

ELEVATION / DEPTH TOP OF FILTER PACK: 135

ELEVATION / DEPTH TOP OF SCREEN: 140

TYPE OF SCREEN: PVC

SLOT SIZE X LENGTH: 10SL x 2'

I.D. OF SCREEN: 1"

TYPE OF FILTER PACK: #1 SAND

ELEVATION / DEPTH BOTTOM OF SCREEN: 142

ELEVATION / DEPTH BOTTOM OF FILTER PACK: 142

TYPE OF BACKFILL BELOW WELL: NA

ELEVATION / DEPTH OF BOREHOLE: 142

WELL NO.: SVE 101 D

Tetra Tech NUS, Inc.

OVERBURDEN MONITORING WELL SHEET FLUSH - MOUNT

PROJECT NWIRP BETHPAGE	LOCATION SVE 101D	DRILLER DAN E. / UNI-TECH
PROJECT NO. 112602019	BORING SVE 101D	DRILLING METHOD HSA
DATE BEGUN 1/6/08	DATE COMPLETED 1/6/08	
FIELD GEOLOGIST C. WARING		DEVELOPMENT METHOD —
GROUND ELEVATION —	DATUM —	

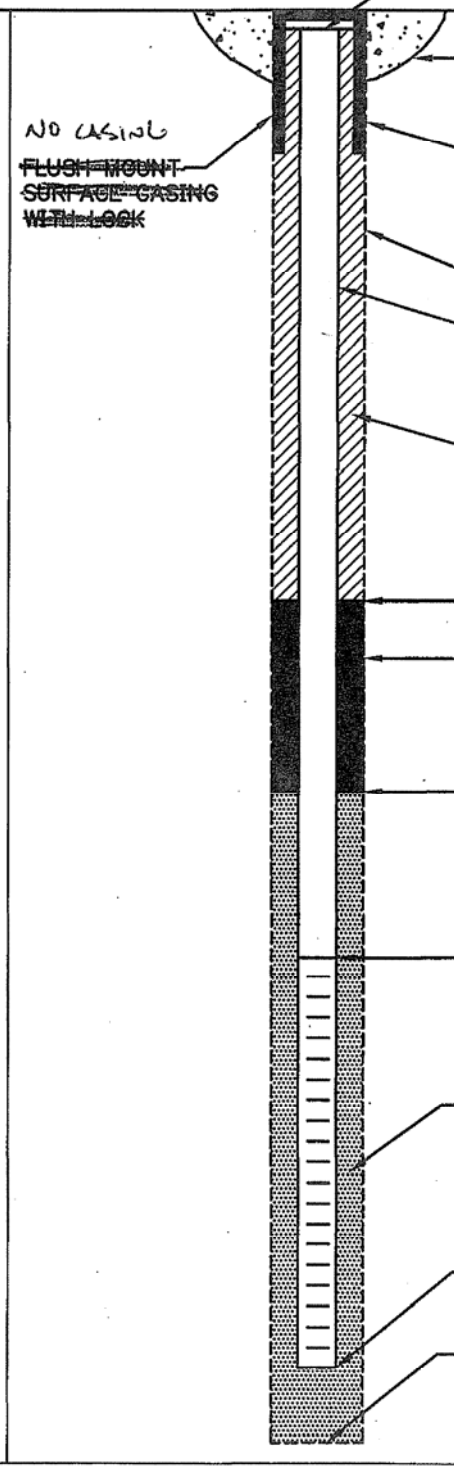

ELEVATION TOP OF RISER: NA

TYPE OF SURFACE SEAL: Cement

TYPE OF PROTECTIVE CASING: Stickup

I.D. OF PROTECTIVE CASING: NA

DIAMETER OF HOLE: 4 1/4"

TYPE OF RISER PIPE: PVC

RISER PIPE I.D.: 2"

TYPE OF BACKFILL/SEAL: GROUT

ELEVATION/DEPTH TOP OF SEAL: / 35'

TYPE OF SEAL: BENTONITE

ELEVATION/DEPTH TOP OF SAND: / 37'

ELEVATION/DEPTH TOP OF SCREEN: / 39'

TYPE OF SCREEN: PVC

SLOT SIZE x LENGTH: 0.020" x 20'

TYPE OF SAND PACK: # 2

DIAMETER OF HOLE IN BEDROCK:

ELEVATION / DEPTH BOTTOM OF SCREEN: / 59'

ELEVATION / DEPTH BOTTOM OF SAND: / 59'

ELEVATION/DEPTH BOTTOM OF HOLE: / 60'

BACKFILL MATERIAL BELOW SAND: SAND / NATURAL

ACAD:FORM_MWFM.dwg 07/20/99 INL

WELL NO.: SVE 101

Tetra Tech NUS, Inc.

OVERBURDEN
MONITORING WELL SHEET
FLUSH - MOUNT

PROJECT NWIRP BETHPAGE	LOCATION SVE 101	DRILLER DAN E / UNI-TECH
PROJECT NO. 112600209	BORING SVE101	DRILLING METHOD HSA
DATE BEGUN 1/6/08	DATE COMPLETED 1/7/08	
FIELD GEOLOGIST C. WARINO		DEVELOPMENT METHOD —
GROUND ELEVATION —	DATUM —	

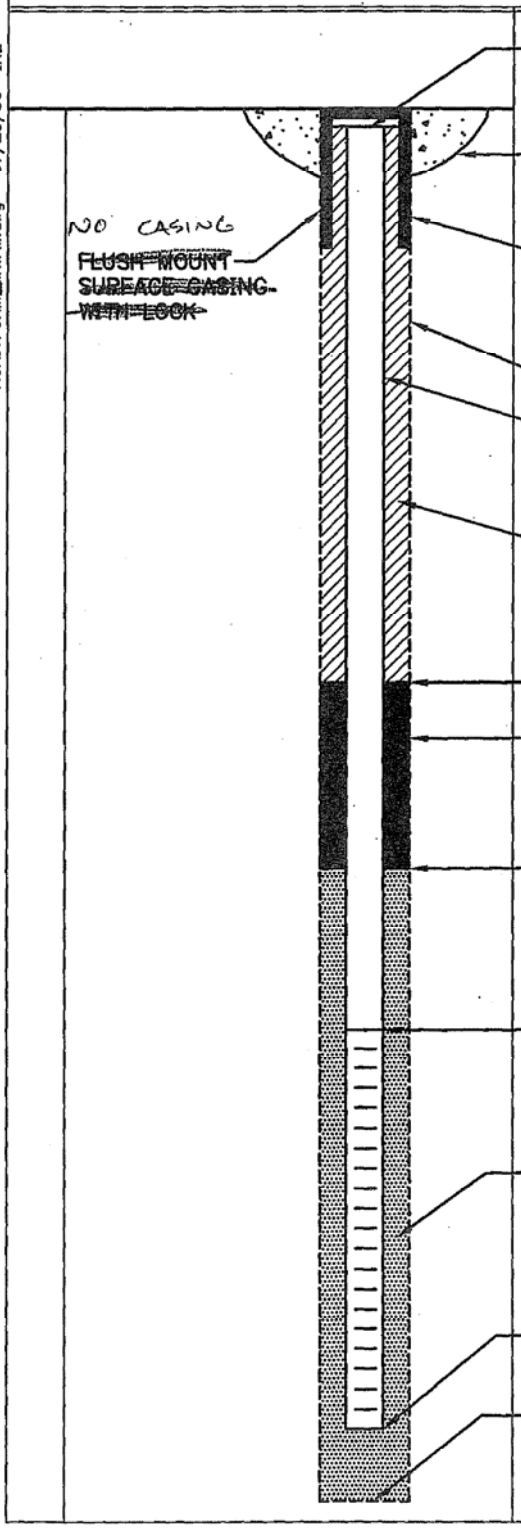

ELEVATION TOP OF RISER: NA

TYPE OF SURFACE SEAL: cement

TYPE OF PROTECTIVE CASING: stick up

I.D. OF PROTECTIVE CASING: NA

DIAMETER OF HOLE: 4 1/4"

TYPE OF RISER PIPE: PVC

RISER PIPE I.D.: 2"

TYPE OF BACKFILL/SEAL: GROUT

ELEVATION/DEPTH TOP OF SEAL: 121'

TYPE OF SEAL: BENTONITE

ELEVATION/DEPTH TOP OF SAND: 123'

ELEVATION/DEPTH TOP OF SCREEN: 125'

TYPE OF SCREEN: PVC

SLOT SIZE x LENGTH: 0.020" x 10'

TYPE OF SAND PACK: #2

DIAMETER OF HOLE IN BEDROCK:

ELEVATION / DEPTH BOTTOM OF SCREEN: 135'

ELEVATION / DEPTH BOTTOM OF SAND: 135'

ELEVATION/DEPTH BOTTOM OF HOLE: 135'

BACKFILL MATERIAL BELOW SAND: Sand / natural

ACAD: FORM_MWFM.dwg 07/20/99 INL

PROJECT NWIRP–BETHPAGE SITE 1

JOB NO. 106–3570

DRILLING SUBCONTRACTOR DELTA WELL AND PUMP CO.

DRILLER J. GUECI

DRILLING METHOD HSA

WELL NO. SVE–102D

DATE OF WELL INSTALLATION 10–06–09

DATE OF WELL DEVELOPMENT 10–07–09

GEOLOGIST J. GRAY/A. BAROQUIERO/TTECI

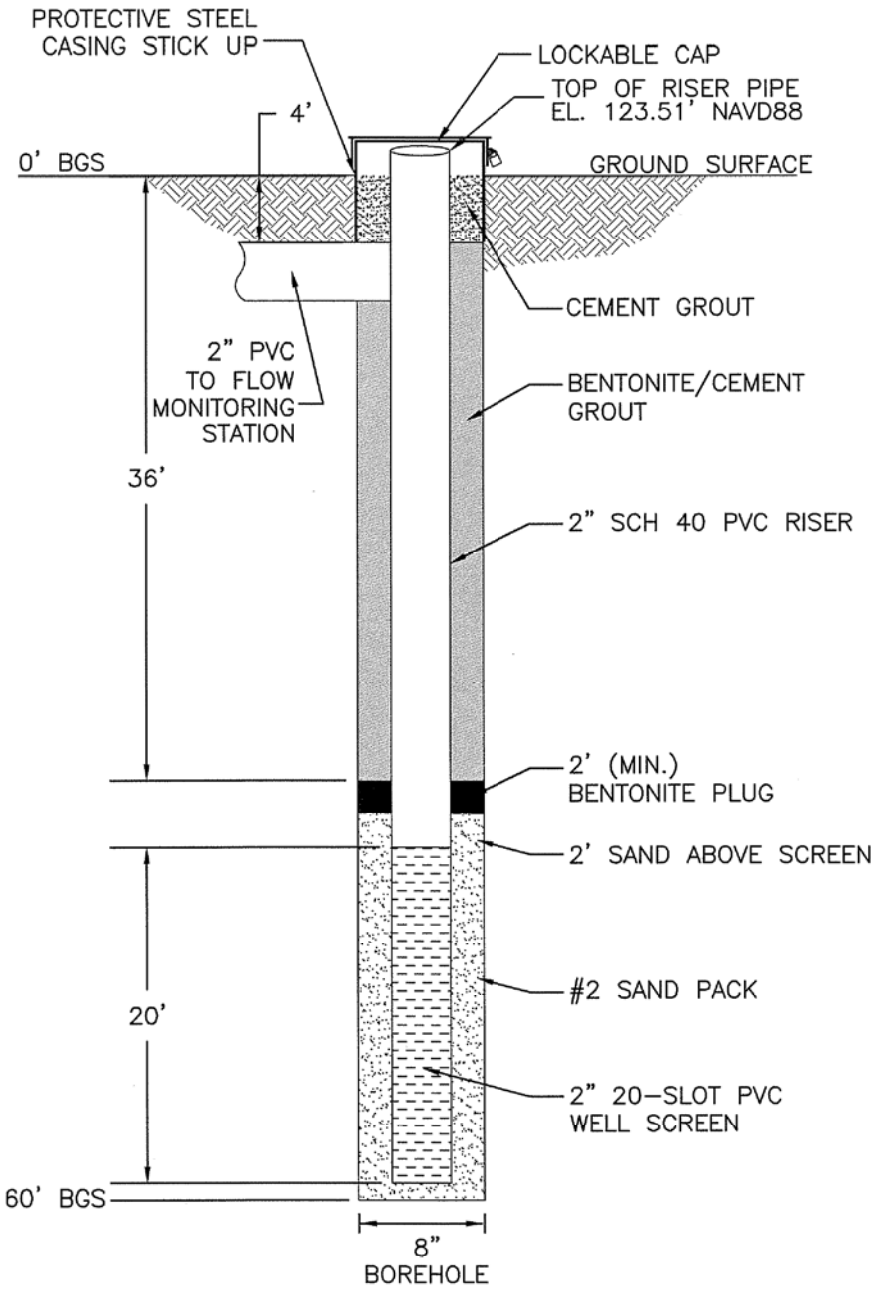

NAVAL FACILITIES ENGINEERING COMMAND
MID–ATLANTIC

NWIRP BETHPAGE SITE 1
SVE CONTAINMENT SYSTEM

DEEP SOIL VAPOR EXTRACTION WELL
CONSTRUCTION DIAGRAM – SVE–102D

TETRA TECH EC, INC.

PROJECT NWIRP–BETHPAGE SITE 1

JOB NO. 106–3570

DRILLING SUBCONTRACTOR DELTA WELL AND PUMP CO.

DRILLER J. GUECI

DRILLING METHOD HSA

WELL NO. SVE–102I

DATE OF WELL INSTALLATION 10–07–09

DATE OF WELL DEVELOPMENT N/A

GEOLOGIST A. BAROQUIERO/TTECI

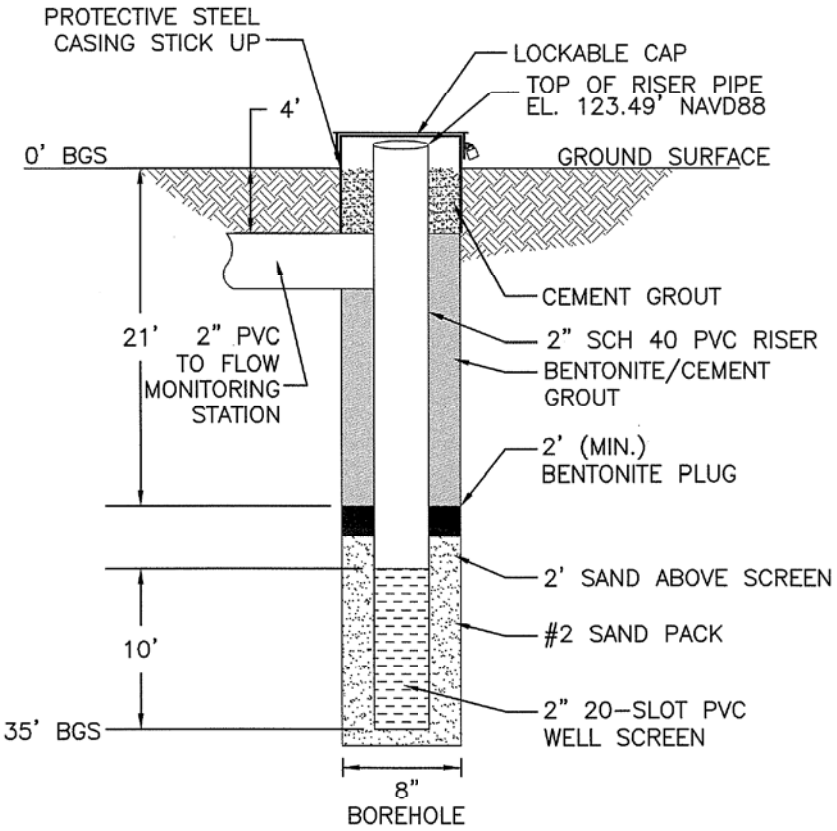

NAVAL FACILITIES ENGINEERING COMMAND
MID–ATLANTIC

NWIRP BETHPAGE SITE 1
SVE CONTAINMENT SYSTEM

INTERMEDIATE SOIL VAPOR EXTRACTION WELL
CONSTRUCTION DIAGRAM – SVE–102I

TETRA TECH EC, INC.

PROJECT NWIRP–BETHPAGE SITE 1

JOB NO. 106–3570

DRILLING SUBCONTRACTOR DELTA WELL AND PUMP CO.

DRILLER R. DEVINE

DRILLING METHOD HSA

WELL NO. SVE–103D

DATE OF WELL INSTALLATION 09–24–09

DATE OF WELL DEVELOPMENT 10–08–09

GEOLOGIST C. JOBLON/TTECI

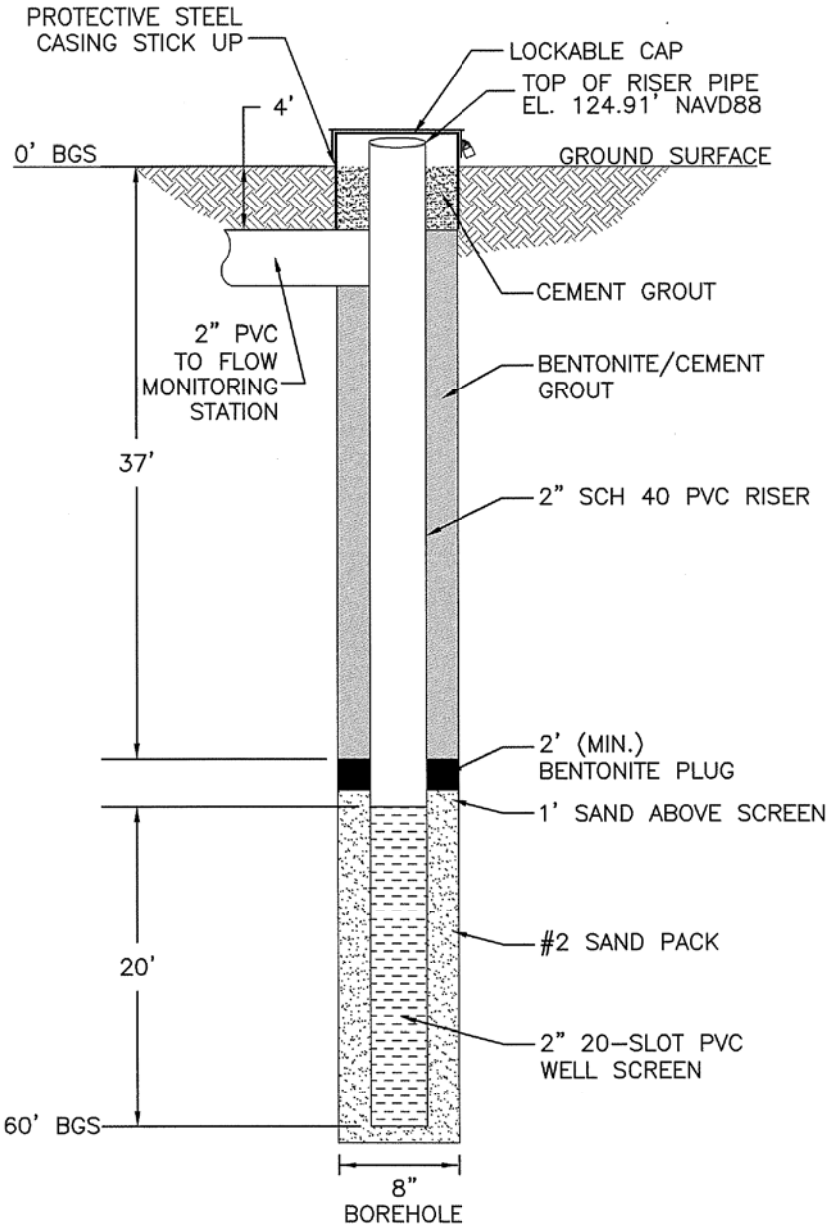

NAVAL FACILITIES ENGINEERING COMMAND
MID–ATLANTIC

NWIRP BETHPAGE SITE 1
SVE CONTAINMENT SYSTEM

DEEP SOIL VAPOR EXTRACTION WELL
CONSTRUCTION DIAGRAM – SVE–103D

TETRA TECH EC, INC.

PROJECT NWIRP–BETHPAGE SITE 1

JOB NO. 106–3570

DRILLING SUBCONTRACTOR DELTA WELL AND PUMP CO.

DRILLER R. DEVINE

DRILLING METHOD HSA

WELL NO. SVE–103I

DATE OF WELL INSTALLATION 09–24–09

DATE OF WELL DEVELOPMENT N/A

GEOLOGIST C. JOBLON/TTECI

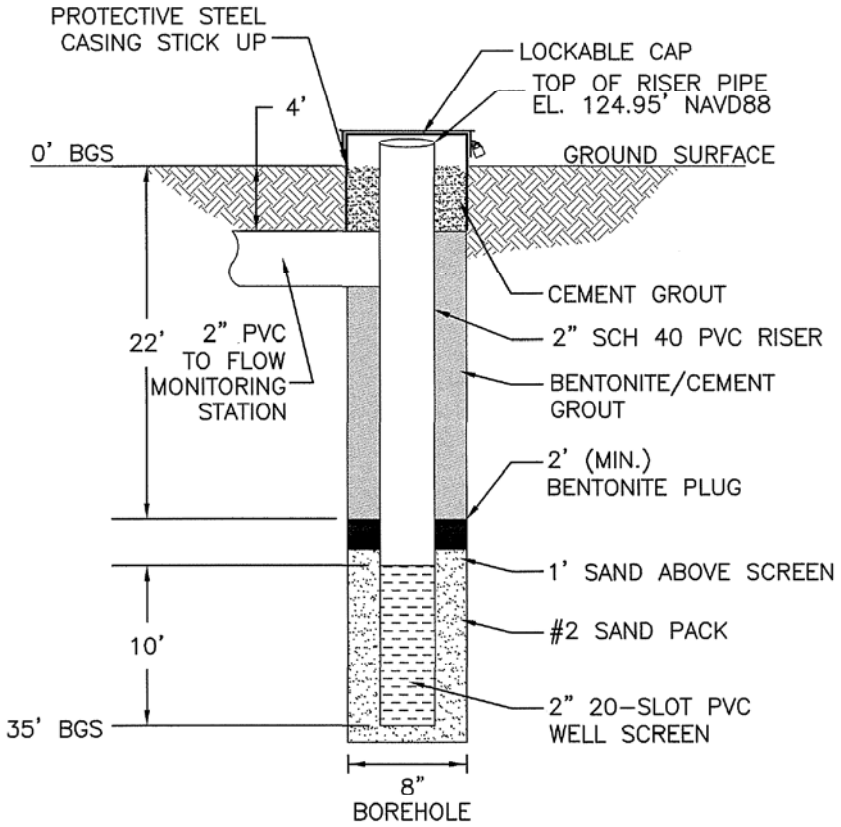

NAVAL FACILITIES ENGINEERING COMMAND
MID–ATLANTIC

NWIRP BETHPAGE SITE 1
SVE CONTAINMENT SYSTEM

INTERMEDIATE SOIL VAPOR EXTRACTION WELL
CONSTRUCTION DIAGRAM – SVE–103I

TETRA TECH EC, INC.

PROJECT NWIRP–BETHPAGE SITE 1

JOB NO. 106–3570

DRILLING SUBCONTRACTOR DELTA WELL AND PUMP CO.

DRILLER J. GUECI

DRILLING METHOD HSA

WELL NO. SVE–104D

DATE OF WELL INSTALLATION 9–30–09

DATE OF WELL DEVELOPMENT 10–08–09

GEOLOGIST C. JOBLON/TTECI

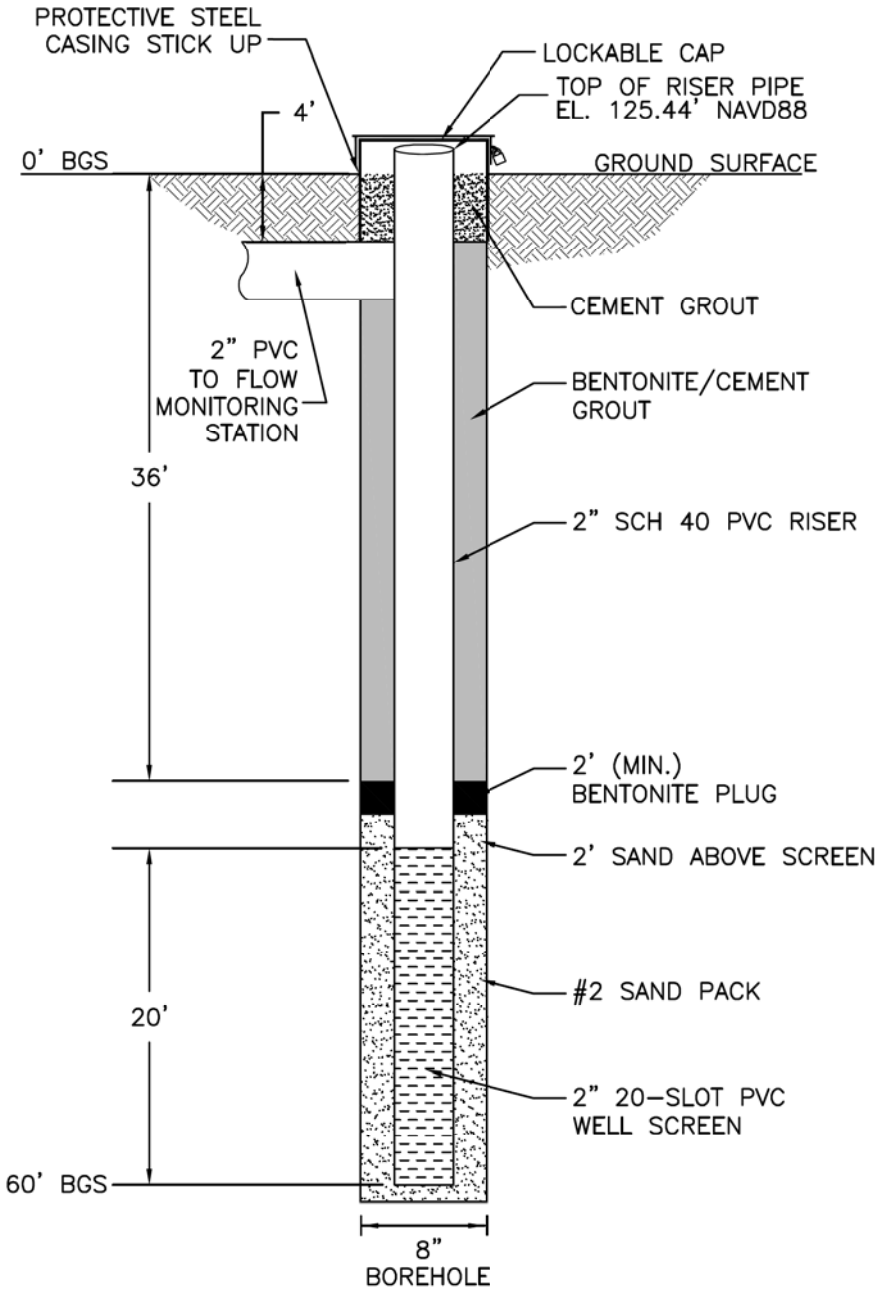

NAVAL FACILITIES ENGINEERING COMMAND
MID–ATLANTIC

NWIRP BETHPAGE SITE 1
SVE CONTAINMENT SYSTEM

DEEP SOIL VAPOR EXTRACTION WELL
CONSTRUCTION DIAGRAM – SVE–104D

TETRA TECH EC, INC.

PROJECT NWIRP–BETHPAGE SITE 1

JOB NO. 106–3570

DRILLING SUBCONTRACTOR DELTA WELL AND PUMP CO.

DRILLER J. GUECI

DRILLING METHOD HSA

WELL NO. SVE–104I

DATE OF WELL INSTALLATION 09–30–09

DATE OF WELL DEVELOPMENT N/A

GEOLOGIST C. JOBLON/TTECI

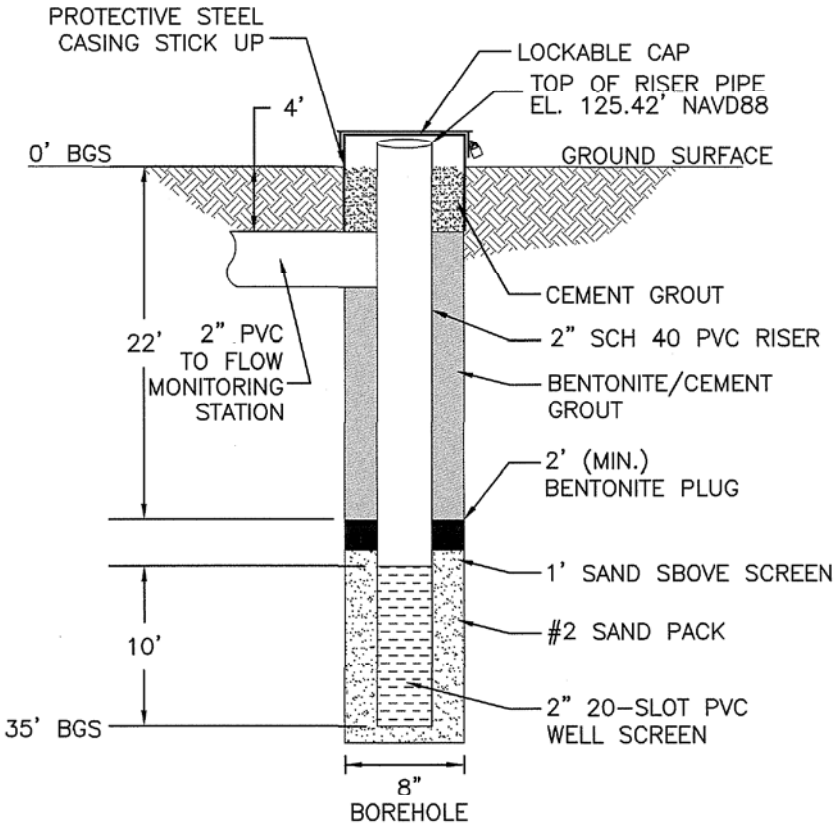

NAVAL FACILITIES ENGINEERING COMMAND
MID–ATLANTIC

NWIRP BETHPAGE SITE 1
SVE CONTAINMENT SYSTEM

INTERMEDIATE SOIL VAPOR EXTRACTION WELL
CONSTRUCTION DIAGRAM – SVE–104I

TETRA TECH EC, INC.

PROJECT NWIRP–BETHPAGE SITE 1

JOB NO. 106–3570

DRILLING SUBCONTRACTOR DELTA WELL AND PUMP CO.

DRILLER J. GUECI

DRILLING METHOD HSA

WELL NO. SVE–105D

DATE OF WELL INSTALLATION 10–02–09

DATE OF WELL DEVELOPMENT 10–08–09

GEOLOGIST C. JOBLON/TTECI

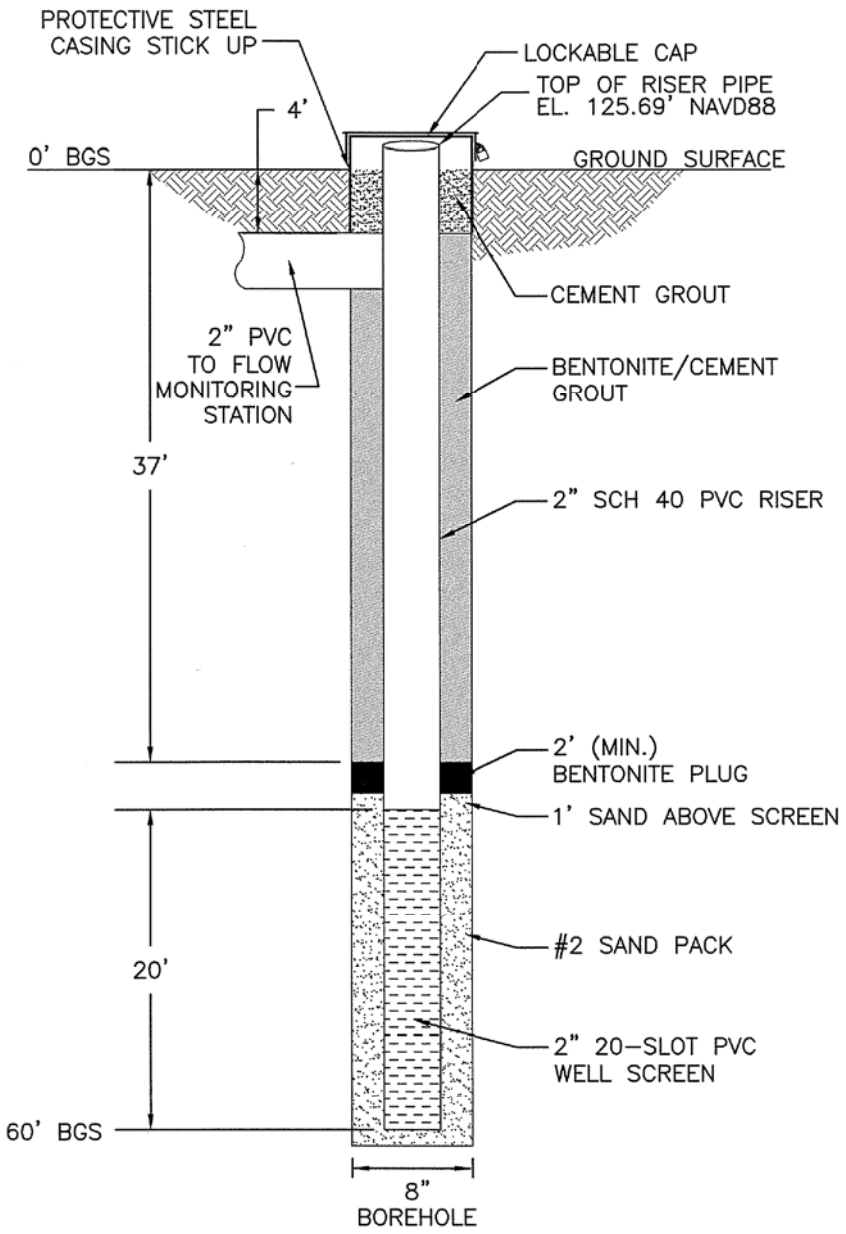

NAVAL FACILITIES ENGINEERING COMMAND
MID–ATLANTIC

NWIRP BETHPAGE SITE 1
SVE CONTAINMENT SYSTEM

DEEP SOIL VAPOR EXTRACTION WELL
CONSTRUCTION DIAGRAM – SVE–105D

TETRA TECH EC, INC.

PROJECT NWIRP–BETHPAGE SITE 1

JOB NO. 106–3570

DRILLING SUBCONTRACTOR DELTA WELL AND PUMP CO.

DRILLER J. GUECI

DRILLING METHOD HSA

WELL NO. SVE–105I

DATE OF WELL INSTALLATION 10–02–09

DATE OF WELL DEVELOPMENT N/A

GEOLOGIST C. JOBLON/TTECI

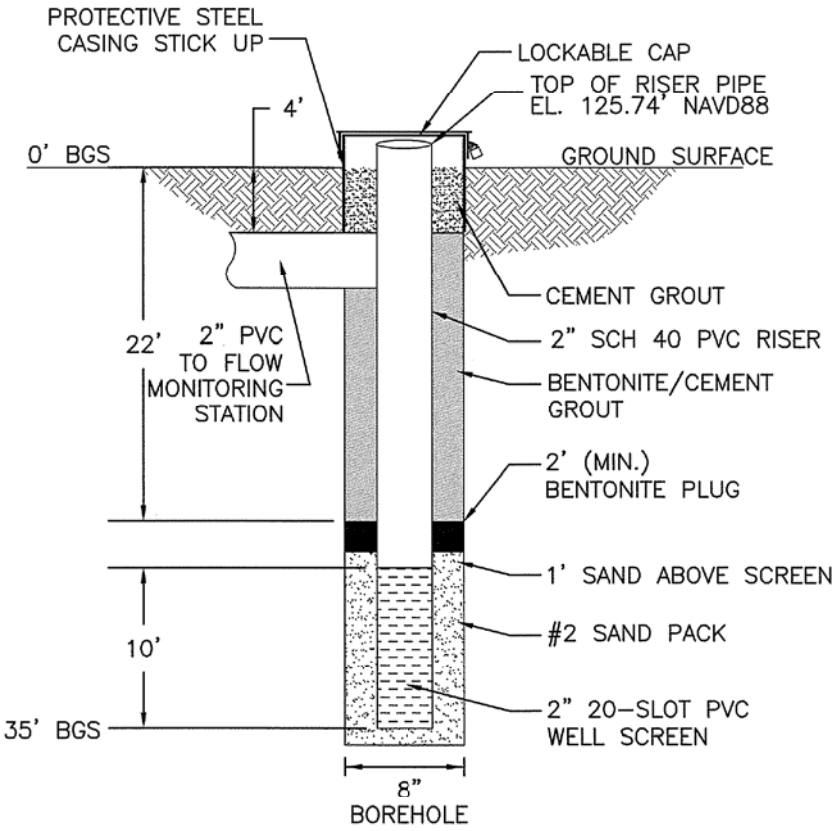

NAVAL FACILITIES ENGINEERING COMMAND
MID–ATLANTIC

NWIRP BETHPAGE SITE 1
SVE CONTAINMENT SYSTEM

INTERMEDIATE SOIL VAPOR EXTRACTION WELL
CONSTRUCTION DIAGRAM – SVE–105I

TETRA TECH EC, INC.

PROJECT NWIRP–BETHPAGE SITE 1

JOB NO. 106–3570

DRILLING SUBCONTRACTOR DELTA WELL AND PUMP CO.

DRILLER J. PITTEL

DRILLING METHOD HSA

WELL NO. SVE–106D

DATE OF WELL INSTALLATION 10–05–09

DATE OF WELL DEVELOPMENT 10–08–09

GEOLOGIST C. JOBLON\TTECI

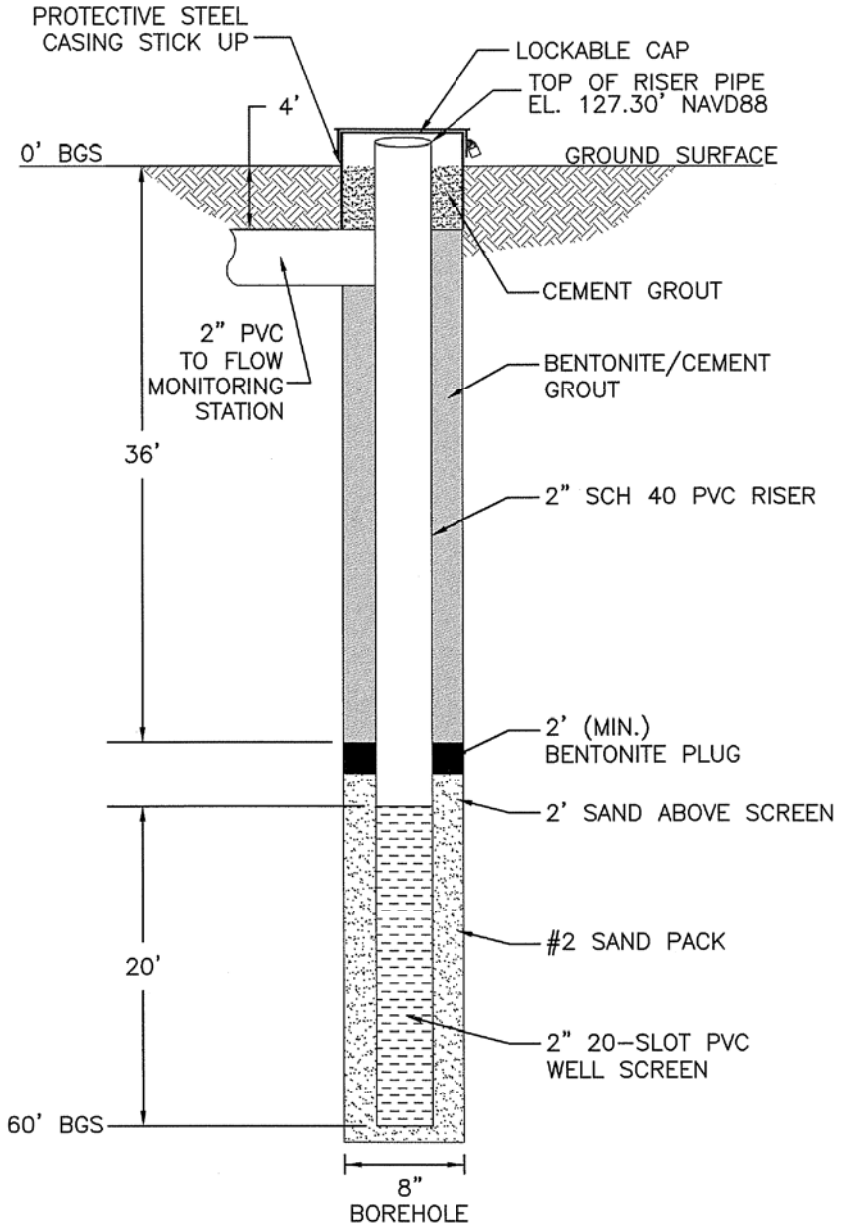

NAVAL FACILITIES ENGINEERING COMMAND
MID–ATLANTIC

NWIRP BETHPAGE SITE 1
SVE CONTAINMENT SYSTEM

DEEP SOIL VAPOR EXTRACTION WELL
CONSTRUCTION DIAGRAM – SVE–106D

TETRA TECH EC, INC.

PROJECT NWIRP–BETHPAGE SITE 1

JOB NO. 106–3570

DRILLING SUBCONTRACTOR DELTA WELL AND PUMP CO.

DRILLER J. PITTEL

DRILLING METHOD HSA

WELL NO. SVE–106I

DATE OF WELL INSTALLATION 10–06–09

DATE OF WELL DEVELOPMENT N/A

GEOLOGIST J. GRAY/TTECI

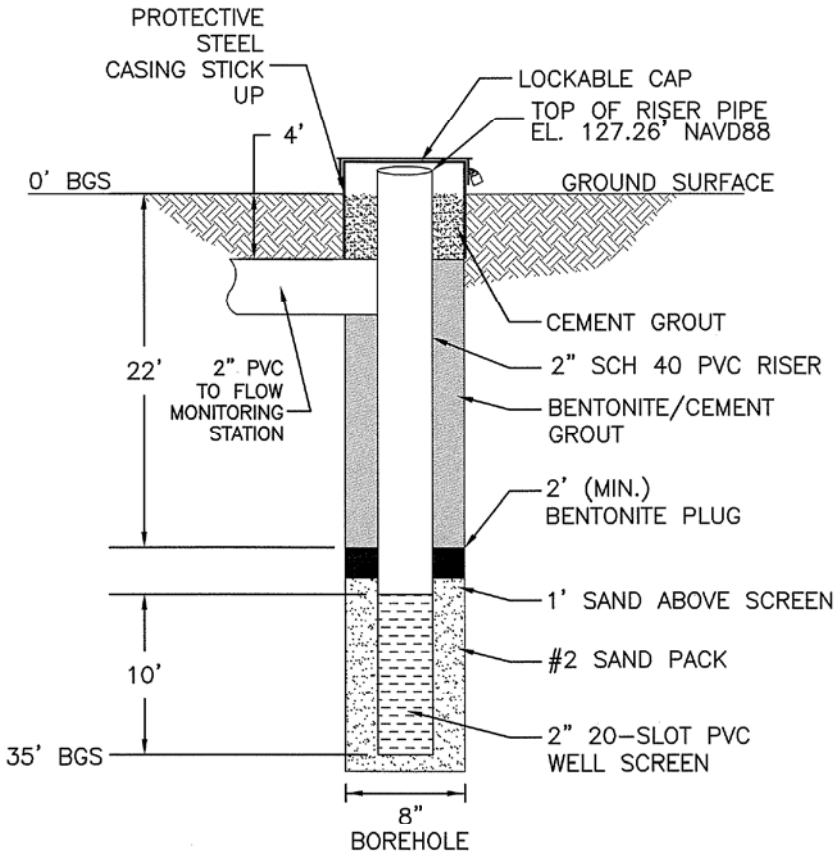

NAVAL FACILITIES ENGINEERING COMMAND
MID–ATLANTIC

NWIRP BETHPAGE SITE 1
SVE CONTAINMENT SYSTEM

INTERMEDIATE SOIL VAPOR EXTRACTION WELL
CONSTRUCTION DIAGRAM – SVE–106I

TETRA TECH EC, INC.

WELL NO.: 107D

Tetra Tech NUS, Inc.

OVERBURDEN MONITORING WELL SHEET FLUSH - MOUNT

PROJECT SITE 1	LOCATION SVE-107D	DRILLER JASON GUECI
PROJECT NO. 112G02019	BORING 107D	DRILLING METHOD AUGERS
DATE BEGUN 10/17/2011	DATE COMPLETED 10/18/2011	DEVELOPMENT METHOD 2" GROUNDFOS
FIELD GEOLOGIST KENDRA SMITH		
GROUND ELEVATION —	DATUM —	

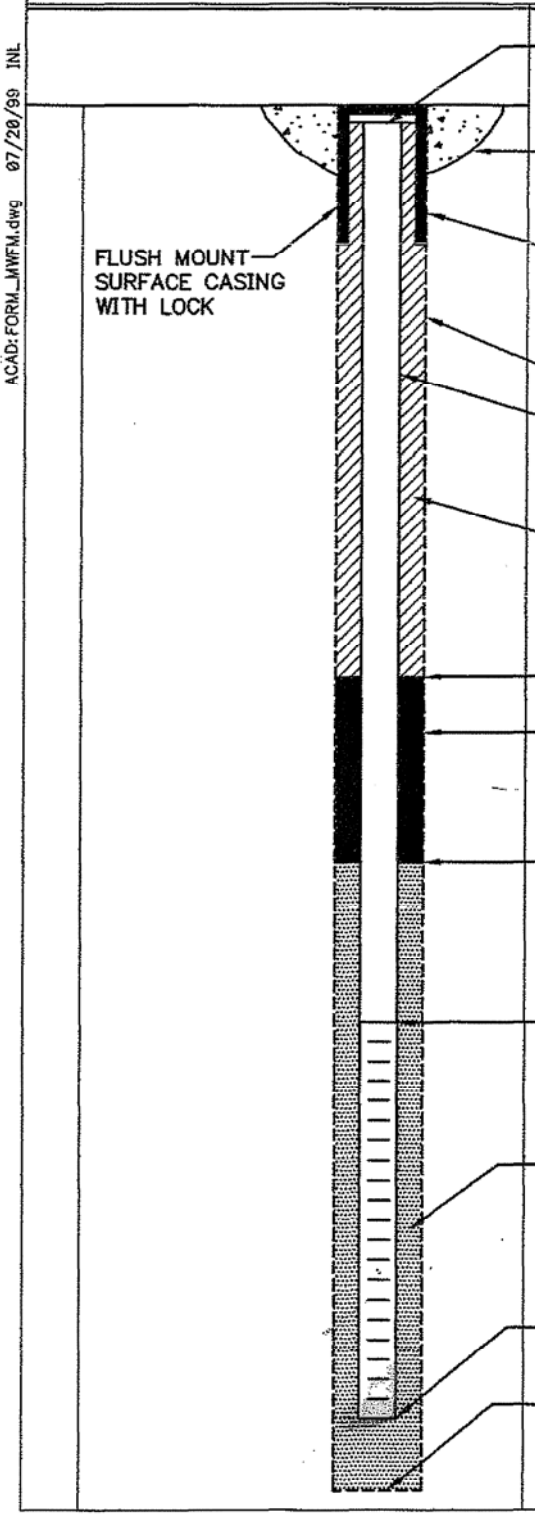

ELEVATION TOP OF RISER: NA

TYPE OF SURFACE SEAL: Cement

TYPE OF PROTECTIVE CASING: NA

I.D. OF PROTECTIVE CASING: NA

DIAMETER OF HOLE: 8"

TYPE OF RISER PIPE: PVC

RISER PIPE I.D.: SVE-107D

TYPE OF BACKFILL/SEAL: PORTLAND CEMENT/ CETCO GROUT

ELEVATION/DEPTH TOP OF SEAL: 127 1/2

TYPE OF SEAL: 1/4" COATED BENTONITE TABLETS

ELEVATION/DEPTH TOP OF SAND: 130'

ELEVATION/DEPTH TOP OF SCREEN: 133

TYPE OF SCREEN: PVC

SLOT SIZE x LENGTH: 10 X 20

TYPE OF SAND PACK: FILTRATION Media WG#1

DIAMETER OF HOLE IN BEDROCK: NA

ELEVATION / DEPTH BOTTOM OF SCREEN: 153

ELEVATION / DEPTH BOTTOM OF SAND: 154

ELEVATION/DEPTH BOTTOM OF HOLE: 154

BACKFILL MATERIAL BELOW SAND: FILTRATION MEDIA WG#1

ACAD: FORM_MWFM.dwg 07/28/99 INL

WELL NO.: SVE-108D

Tetra Tech NUS, Inc.

OVERBURDEN
MONITORING WELL SHEET
FLUSH - MOUNT

PROJECT SITE	LOCATION SVE-108D	DRILLER JASON GUECI
PROJECT NO. 112G02D19	BORING 108D	DRILLING METHOD AUGERS
DATE BEGUN 10/19/2011	DATE COMPLETED 10/20/2011	DEVELOPMENT METHOD 2" GRUNDFOS
FIELD GEOLOGIST KENDRA SMITH		
GROUND ELEVATION —	DATUM —	

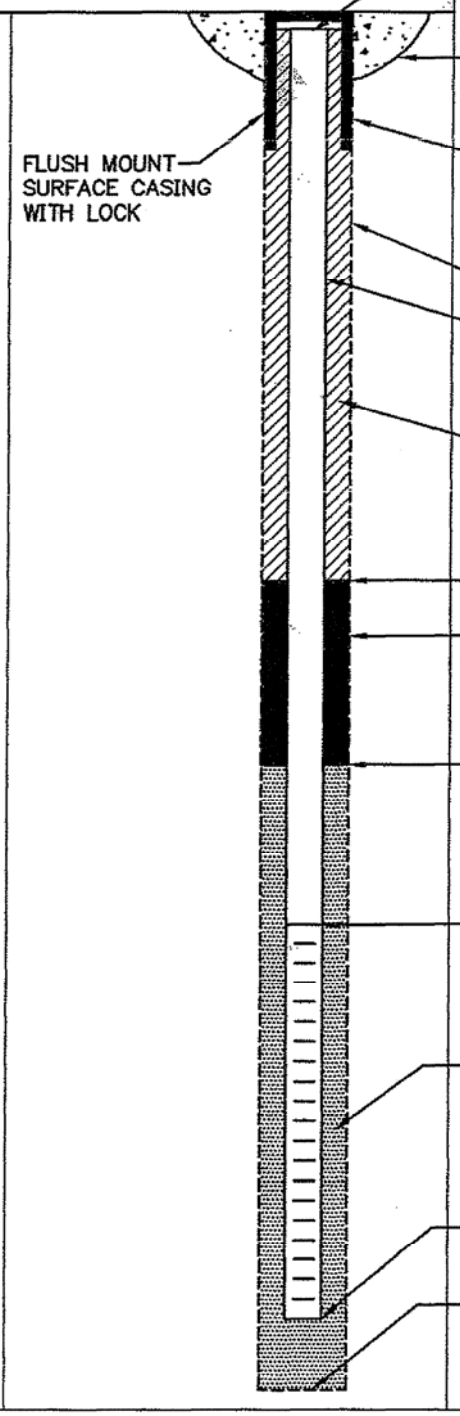

ELEVATION TOP OF RISER: —

TYPE OF SURFACE SEAL: cement

TYPE OF PROTECTIVE CASING: NA

I.D. OF PROTECTIVE CASING: NA

DIAMETER OF HOLE: 8"

TYPE OF RISER PIPE: PVC

RISER PIPE I.D.: #SVE-108D

TYPE OF BACKFILL/SEAL: PORTLAND CEMENT/GEICO GROUT

ELEVATION/DEPTH TOP OF SEAL: /28'

TYPE OF SEAL: 1/4" COATED BENTONITE TABLETS

ELEVATION/DEPTH TOP OF SAND: /30

ELEVATION/DEPTH TOP OF SCREEN: /33

TYPE OF SCREEN: PVC

SLOT SIZE x LENGTH: 10 X 20

TYPE OF SAND PACK: FILTRATION MEDIA WG #1

DIAMETER OF HOLE IN BEDROCK: NA

ELEVATION / DEPTH BOTTOM OF SCREEN: /53

ELEVATION / DEPTH BOTTOM OF SAND: /54

ELEVATION/DEPTH BOTTOM OF HOLE: /54

BACKFILL MATERIAL BELOW SAND: FILTRATION MEDIA WG #1

ACAD: FORM_MWFM.dwg 07/20/99 INL

WELL NO.: ~~109~~ SVE-109

Tetra Tech NUS, Inc.

OVERBURDEN
MONITORING WELL SHEET
FLUSH - MOUNT

PROJECT SITE 2	LOCATION SVE-109D	DRILLER JASON GUECI
PROJECT NO. 112G02019	BORING 109D	DRILLING METHOD BUGGERS
DATE BEGUN 10/20/2011	DATE COMPLETED 10/21/2011	DEVELOPMENT METHOD 2" GRUNDFOS
FIELD GEOLOGIST RENDKA SMITH		
GROUND ELEVATION —	DATUM —	

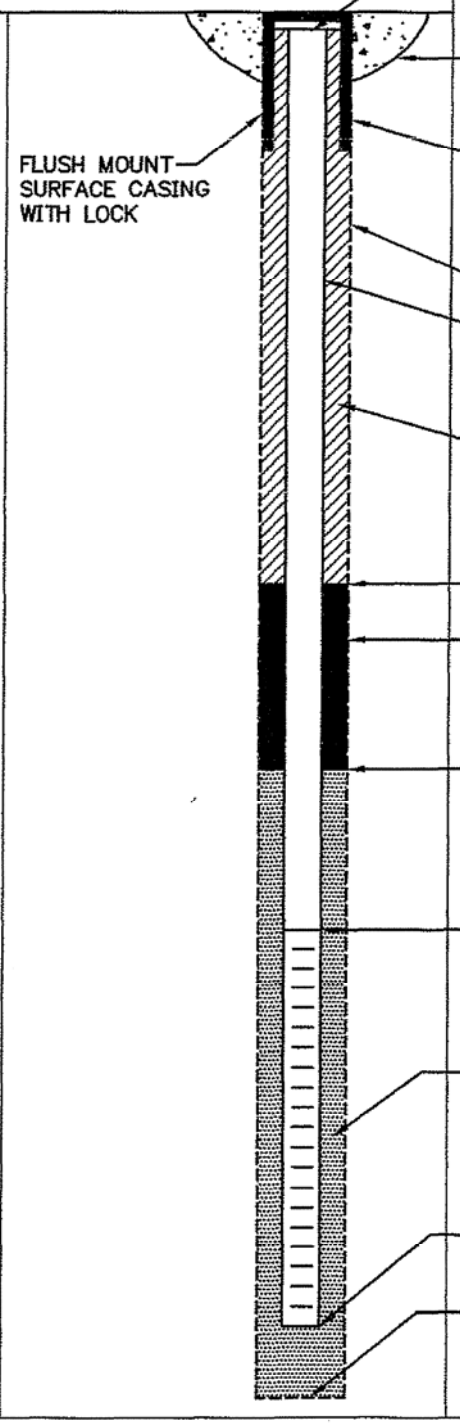

ELEVATION TOP OF RISER: —

TYPE OF SURFACE SEAL: cement

TYPE OF PROTECTIVE CASING: NA

I.D. OF PROTECTIVE CASING: NA

DIAMETER OF HOLE: 8"

TYPE OF RISER PIPE: PVC

RISER PIPE I.D.: SVE-109D

TYPE OF BACKFILL/SEAL: PORTLAND CEMENT/ CETCO GROUT

ELEVATION/DEPTH TOP OF SEAL: 129

TYPE OF SEAL: 1/4" COATED BENTONITE PELLETS.

ELEVATION/DEPTH TOP OF SAND: 131

ELEVATION/DEPTH TOP OF SCREEN: 134

TYPE OF SCREEN: PVC

SLOT SIZE x LENGTH: 10 X 20

TYPE OF SAND PACK: FILTRATION MEDIA WG#1

DIAMETER OF HOLE IN BEDROCK: NA

ELEVATION / DEPTH BOTTOM OF SCREEN: 154

ELEVATION / DEPTH BOTTOM OF SAND: 155

ELEVATION/DEPTH BOTTOM OF HOLE: 155

BACKFILL MATERIAL BELOW SAND: FILTRATION MEDIA WG#1

ACAD: FORM_MWFM.dwg 07/20/99 INL

WELL NO.: SVE-110D

Tetra Tech NUS, Inc.

OVERBURDEN
MONITORING WELL SHEET
FLUSH - MOUNT

PROJECT SITE 7	LOCATION SVE-110D	DRILLER JASON GUECI
PROJECT NO. 112G02019	BORING 110D	DRILLING METHOD AUGERS
DATE BEGUN 10/20/2011	DATE COMPLETED 10/20/2011	
FIELD GEOLOGIST KENDRA SMITH		DEVELOPMENT METHOD 2" GRUNDFOS
GROUND ELEVATION —	DATUM —	

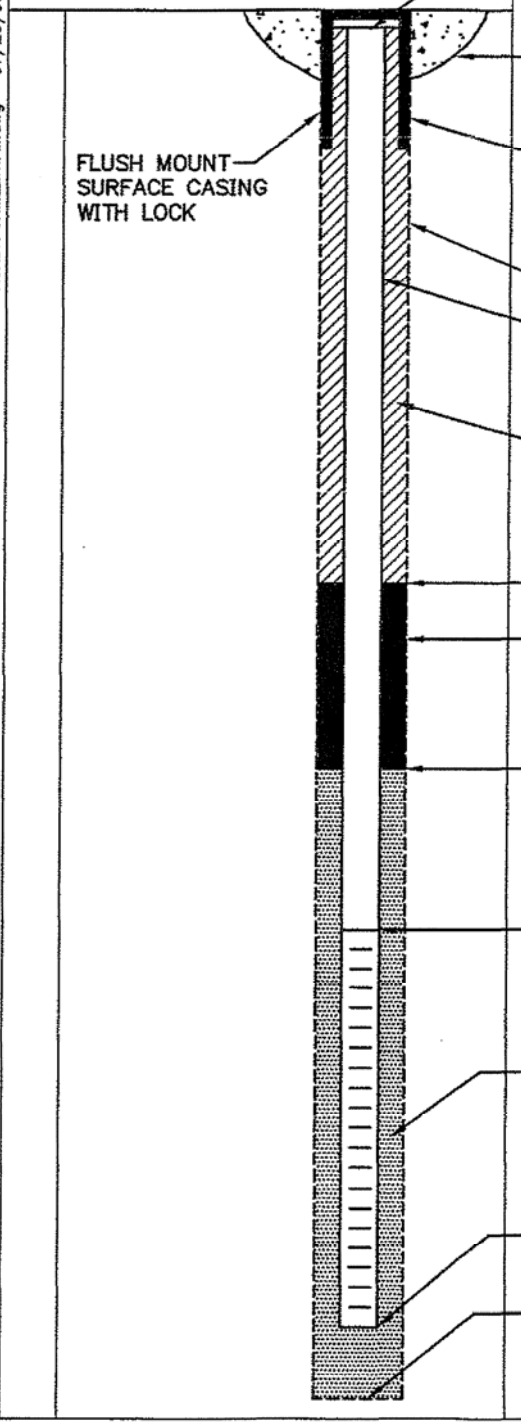

ELEVATION TOP OF RISER: —

TYPE OF SURFACE SEAL: Cement

TYPE OF PROTECTIVE CASING: NA

I.D. OF PROTECTIVE CASING: NA

DIAMETER OF HOLE: 8'

TYPE OF RISER PIPE: PVC

RISER PIPE I.D.: SVE-110D

TYPE OF BACKFILL/SEAL: PORTLAND CEMENT/ CETCO GROUT

ELEVATION/DEPTH TOP OF SEAL: 128'

TYPE OF SEAL: 1/4" COATED BENTONITE TABLETS

ELEVATION/DEPTH TOP OF SAND: 130 1/2'

ELEVATION/DEPTH TOP OF SCREEN: 133

TYPE OF SCREEN: PVC

SLOT SIZE x LENGTH: 10 X 20

TYPE OF SAND PACK: FILPRO FILTRATION MEDIA #GH1

DIAMETER OF HOLE IN BEDROCK: NA

ELEVATION / DEPTH BOTTOM OF SCREEN: 153

ELEVATION / DEPTH BOTTOM OF SAND: 154

ELEVATION/DEPTH BOTTOM OF HOLE: 154

BACKFILL MATERIAL BELOW SAND: FILPRO FILTRATION MEDIA #GH1

ACAD:FORM_MWFM.dwg 07/20/99 INL

WELL NO.: SVE-111D

Tetra Tech NUS, Inc.

OVERBURDEN
MONITORING WELL SHEET
FLUSH - MOUNT

PROJECT NWIRP SITE 1	LOCATION SVE-111D	DRILLER JASON GUBBI
PROJECT NO. 112G02019	BORING 111D	DRILLING METHOD AUGERS
DATE BEGUN 10/21/2011	DATE COMPLETED 10/21/2011	
FIELD GEOLOGIST KENDRA		DEVELOPMENT METHOD 2" GRUNDFOS PUMP
GROUND ELEVATION —	DATUM —	

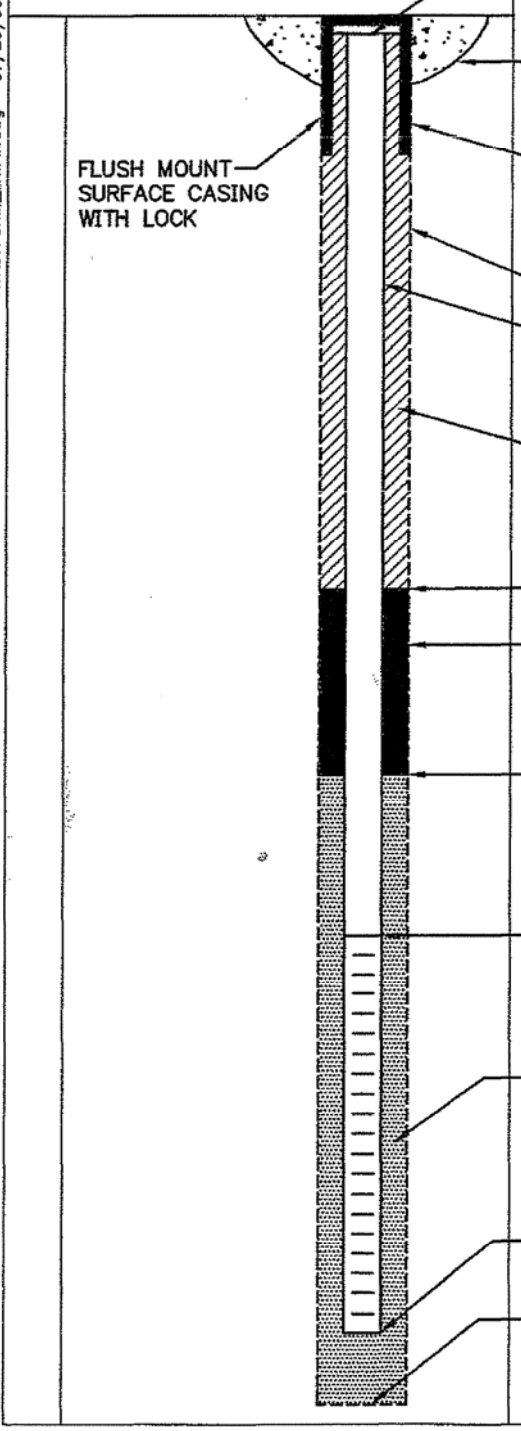

ELEVATION TOP OF RISER: —

TYPE OF SURFACE SEAL: cement

TYPE OF PROTECTIVE CASING: N/A

I.D. OF PROTECTIVE CASING: N/A

DIAMETER OF HOLE: 8"

TYPE OF RISER PIPE: PVC

RISER PIPE I.D.: SVE-~~104D~~ 111D

TYPE OF BACKFILL/SEAL: PORTLAND CEMENT/ CETCO GROUT

ELEVATION/DEPTH TOP OF SEAL: 132

TYPE OF SEAL: 1/4" COATED BENTONITE TABLETS

ELEVATION/DEPTH TOP OF SAND: 134

ELEVATION/DEPTH TOP OF SCREEN: 138

TYPE OF SCREEN: PVC

SLOT SIZE x LENGTH: 10 X 20

TYPE OF SAND PACK: FILPRO FILTRATION MEDIA WG#1

DIAMETER OF HOLE IN BEDROCK: N/A

ELEVATION / DEPTH BOTTOM OF SCREEN: 158

ELEVATION / DEPTH BOTTOM OF SAND: 158

ELEVATION/DEPTH BOTTOM OF HOLE: 158

BACKFILL MATERIAL BELOW SAND: FILPRO FILTRATION MEDIA WG#1

ACAD: FORM_MWFM.dwg 07/20/99 INL

APPENDIX C
SVE, SVPM VACUUM MEASUREMENT, AND SOIL GAS SAMPLING LOG SHEETS

NWIRP BETHPAGE - SITE 1 - OFFSITE SOIL VAPOR MONITORING
SVE CONTAINMENT SYSTEM MEASUREMENT SHEET

Site Name: Site 1 - Former Drum Marshalling Area **Project /CTO No.:** _____

Company: _____ **Personnel:** _____

Weather Conditions: _____ **Measuring Device:** _____

SVE ID Number	Date	Time	Pressure (inches of water)	Valve Position	Comments and Observations
Conex Box - Main					
SVE 101I					
SVE 101D					
SVE 102I					
SVE 102D					
SVE 103I					
SVE 103D					
SVE 104I					
SVE 104D					
SVE 105I					
SVE 105D					
SVE 106I					
SVE 106D					
SVE 107			NA		
SVE 108			NA		
SVE 109			NA		
SVE 110			NA		
SVE 111			NA		

SVE System Data	Date	Time	Measurement	Comments and Observations
Blower Running				
Flow Rate				
Temp (Pre-Carbon)				
Pressure (Pre-Blower)				
Moisture In Header				

NWIRP BETHPAGE - SITE 1 - OFFSITE SOIL VAPOR MONITORING
SVPM VACUUM/PRESSURE MEASUREMENT SHEET

Site Name: Site 1 - Former Drum Marshalling Area **Project /CTO No.:** _____

Company: _____ **Personnel:** _____

Weather Conditions: _____ **Measuring Device:** _____

SVPM ID Number	Date	Time	Pressure (inches of water)	Comments and Observations
BPS1-SVPM2001S				
BPS1-SVPM2001I				
BPS1-SVPM2001D				
BPS1-SVPM2002S				
BPS1-SVPM2002I				
BPS1-SVPM2002D				
BPS1-SVPM2003S				
BPS1-SVPM2003I				
BPS1-SVPM2003D				
BPS1-SVPM2004S				
BPS1-SVPM2004I				
BPS1-SVPM2004D				
BPS1-SVPM2006S				
BPS1-SVPM2006I				
BPS1-SVPM2006D				
BPS1-SVPM2007S				
BPS1-SVPM2007I				
BPS1-SVPM2007D				

SOIL GAS SAMPLING LOG SHEET

Project Site Name: NWIRP Bethpage Site 1 **Sample ID No.:**
Project/CTO No.: **Sample Location:**
Company: **Sampled By:**

SAMPLING DATA:

Date: / **Time:**	**Wind speed** (Visual)	**Wind Direction** (estimated)	**Ambient temperature** (°F)	**Barometric Pressure** (in.)	**Relative Humidity** (%)	**Weather Description**
Container Type:						

Duplicate Sample (if collected)

Canister #		**Canister #**	
Filter Type/Flow		**Filter Type/Flow**	

Start Time Vacuum		in Hg		in Hg
End Time Vacuum		in Hg		in Hg

Purge Data (Time)	**Flow Rate (mL/minute)**	**Total volume**	**PID Reading (ppm)**	**Helium Reading (ppm)**	**Comments/Observations**

Notes: