Operation Monitoring & Maintenance Plan

for the

Soil Vapor Extraction System

at

Former Cleaners Products Supply
State Superfund Site No. 241123

March 2018

Prepared by:

New York State Department of Environmental Conservation
Division of Environmental Remediation
625 Broadway
Albany, NY 12233-7017

and

EnviroTrac Ltd.
5 Old Dock Road
Yaphank, NY 11980

CERTIFICATIONS

I, JOHN DURNIN, certify that I am currently a registered professional engineer licensed by the State of New York, and that this Operation, Maintenance, and Monitoring Plan was prepared in accordance with all applicable statutes, substantive requirements, regulations, and in substantial conformance with the DER Technical Guidance for Site Investigation and Remediation (DER-10).

072814	3/28/2018	
NYS Professional Engineer #	Date	Signature

Table of Contents

Table of Contents 1
1.0 Introduction 2
2.0 SVE System Components 2
2.1 SVE Wells 2
2.2 SVE Piping 2
2.3 Treatment Shed 2
2.3.1 Fresh Air Intake Filter 2
2.3.2 Moisture Separator 3
2.3.3 Inline Air Filter 3
2.3.4 Regenerative Blower 3
2.3.5 Air Silencer 3
2.4 Carbon Treatment 3
2.5 Discharge Stack 4
2.6 Sampling Ports 4
2.7 Alarm/Alert Systems 4
3.0 Electric Service 5
4.0 Initial Start-Up Procedures – Month 1 5
5.0 Intermediate Operational Period – Month 2 through 6 6
6.0 Longer Term Operation, Monitoring & Maintenance – Post Month 6 7
7.0 Monthly Reporting 8
8.0 System Optimization/Site Management 8

Appendix A – SVE Equipment Cutsheets/Operation and Maintenance Manual/Figures
Section 1. SVE Equipment
Section 2. SVE Instrumentation/Switches
Section 3. Heating/Ventilation/Lighting
Section 4. Control Panel Materials
Section 5. System Drawings/Figures
Appendix B – SVE System Inspection and Monitoring Forms

1.0 Introduction

This Operation, Monitoring, and Maintenance (OM&M) Plan is meant to govern the initial shakedown operations and longer term operation and maintenance of the Soil Vapor Extraction (SVE) system installed in accordance with the August 2016 Soil Vapor Extraction System Design Work Plan, at the Former Cleaners Products Supply State Superfund Site, Site No. 241123, located at 50-45 Barnett Avenue, Sunnyside, Queens, NY.

This OM&M Plan expands upon the conceptual OM&M Plan presented in the August 2016 SVE work plan and shall be used to guide the operation and maintenance of this system for the initial year of operations. Following the first year of operating the SVE system, this plan may require modification before it is incorporated into the Site Management Plan of the Former Cleaners Products Supply State Superfund Site.

2.0 SVE System Components

The SVE System includes five (5) vapor extraction wells, overhead piping routed to an external treatment shed, a moisture separator, particulate filter, 20 horsepower regenerative blower, and two (2) vapor-phase granular activated carbon vessels.

2.1 SVE Wells

The five (5) SVE wells are constructed with a 10 foot screen located at 6 to 16 feet below grade at the locations indicated in Figure 1. Well construction details are shown on Figure 2. The screen interval was chosen based on the depth of PCE contamination found during the Site Characterization and Remedial Investigation and the groundwater depth beneath the site, which ranges from 21 to 25 feet below grade.

2.2 SVE Piping

The SVE wells are trenched to nearby walls, where they run up and along the ceiling as shown in Figure 1. The piping exits the building along the western edge and enters the treatment shed within the alleyway between the building and the adjacent parking lot.

2.3 Treatment Shed

2.3.1 Fresh Air Intake Filter

A fresh air intake filter was placed before the moisture separator as indicated on Figure 3, the process and instrumentation diagram (P&ID). The fresh air intake is meant for testing the system before vapors from the SVE wells are extracted, or if necessary, to bleed in fresh air along with extracted vapors collected from the SVE wells to dilute vapor concentrations for treatment purposes. Following initial start-up, the fresh air intake is anticipated to be closed during normal operating conditions.

2.3.2 Moisture Separator

A 47-gallon moisture separator (see Appendix A) was installed in the treatment shed with a high level alarm/shutoff and manual liquid pump for separating moisture from the collected vapors. The manual pump will be used to empty the moisture separator into a 55 gallon drum for sampling and storage within the eastern alleyway which borders the site building. If it's determined to be non-hazardous, it will require a "contained-in/out" determination before it is disposed. The monitoring frequency of the fluid level of this component is included in Appendix B.

2.3.3 Inline Air Filter

An inline filter was installed for removing particulates before air enters the regenerative blower. Sample ports were installed on either side of the filter to measure pressure drops which will inform when the filter requires replacement.

2.3.4 Regenerative Blower

A 19.44 horsepower Air Tech 3BA1900-7AT16 (see Section 1 of Appendix A) regenerative blower was installed with a variable frequency drive (VFD) to refine air flow-rates and for efficiency.

2.3.5 Air Silencer

A discharge silencer was installed after the regenerative blower to help reduce the noise that will be produced from the regenerative blower.

2.4 Carbon Treatment

Two vapor phase granular-activated-carbon (GAC) vessels are located outside of the treatment shed, inside the fenced in alleyway between the site building and adjacent parking lot. The GAC vessels are the final treatment component before extracted vapors are discharged through the effluent stack outside and above the building. As outlined further below, post-GAC effluent and pre-GAC influent will be monitored with air sampling and a photo-ionization detector (PID) to determine when GAC vessels need replacement to keep the discharge of volatile organic compounds (VOCs) below an emission rate that meets the ambient guideline concentration (AGC) of 4 µg/m^3 at the nearest receptor such that the emissions associated with this project comply with the substantive requirements of 6 NYCRR Part 212 and DAR-1.

Pre-carbon, mid-carbon, and post-carbon will initially be monitored on a daily basis during the first week of operation, followed by weekly visits for the next three weeks, and monthly visits thereafter. PID readings and Air samples (TO-15) will be collected in accordance with the frequencies noted in Section 4.0 below.

The PID and TO-15 monitoring data will determine when carbon breakthrough starts to occur such that the carbon vessels can be changed such that the emission rate stays below the concentration when the modeled Ambient Guideline Concentration (AGC) of 4 µg/m³ (see DAR-1) would be exceeded at the nearest residential property across the street from the site.

NYSDEC is provided with effluent monitoring data as soon as it is generated from the Test America laboratory to allow timely replacement of carbon vessels as needed.

Best efforts will be made to direct spent carbon to a regeneration facility for re-use in accordance with DER-31, Green Remediation.

2.5 Discharge Stack

Following treatment of extracted vapors via the GAC units, the effluent runs along the exterior wall of the building above the treatment shed, and discharges in the direction of the railroad tracks, about 3 feet above the building roofline.

2.6 Sampling Ports

Sample ports and instrumentation have been installed to collect various types of system data, including total VOCs extracted/discharged, vacuum, air flow rate, and air temperature. Sampling ports and/or instruments were installed at the following locations:

1. Sample ports were installed on each extraction well; and before, in between, and after the two carbon drums for collection of samples for laboratory analysis and PID measurements for total VOCs
2. Flow meters – one on each manifold leg and one total system meter before the air filter
3. Vacuum gauges – before and after the air filter and on each leg of the manifold
4. Temperature gauges before and after the regenerative blower
5. Pressure gauges – blower effluent and before and after each carbon drum

2.7 Alarm/Alert Systems

An alert system governed by a programmable logic controller/telemetry system (SCADA – supervisory control and data acquisition system) was installed and is capable of sending the following text/email alerts so the system may be monitored from a remote location with internet access:

1. Moisture separator tank high level alert
2. Low vacuum alarm
3. Blower VFD failure alarm
4. High temperature alarm on carbon drum inlet air as follows:

a. If temperatures approach 130 degrees F, the extraction rate should be dialed back.
b. If temperatures approach 140 degrees F, the system will be shut down, per carbon unit manufacturer's recommendations.

5. A heater, exhaust fan, and two thermostats will be included and the enclosure's air temperature will be monitored with a room temperature transmitter.

3.0 Electric Service

NYSDEC is responsible for paying the electric bills, and are being sent directly to the Division of Environmental Remediation, 625 Broadway, Albany, NY as follows:

Attention: Dwight Zobre
Division of Environmental Remediation – 12th Floor
625 Broadway, Mail Stop 7012-7012
Albany, NY 12233-7016
dwight.zobre@dec.ny.gov

4.0 Initial Start-Up Procedures – Month 1

After completing construction of the SVE system, an initial inspection of the system's components was conducted as noted in the SVE Inspection Form attached in Appendix B. All overhead piping and connections will be inspected to ensure everything is securely fastened to walls and the ceiling. All piping and system components located outside of the site building and the treatment shed were inspected to ensure everything was securely fastened.

All electrical connections will be inspected to ensure there are no loose wires and that every electric component has been connected.

The initial Start-up phase includes a 1 month shake-down period in which the system will be shut off at the end of each day for the first week, and then operated continuously during the rest of the month with weekly monitoring to ensure adequate carbon replacement. During this period, the entire system and all piping connections will be thoroughly inspected to ensure the system meets the intended design parameters.

The system will initially be energized under the lowest allowable setting with the fresh air intake filter open. Each extraction well will be slowly opened until every well is drawing an adequate vacuum to achieve influence across the site and the fresh air intake filter reduced accordingly. Each of the following parameters will be recorded during the first month-long startup phase in accordance with the frequency listed in Table 2 below. An "SVE Monitoring Form" has been included in Appendix B.

Table 2: Initial Start-up Monitoring – Month 1

Parameter	Location(s)	Frequency

PID monitoring*	1. Each of the five (5) extraction wells 2. Pre-carbon 3. Mid-carbon 4. Post-carbon	1st Week: 3 or more times per day 2nd – 4th Week: up to 3 times per week/as necessary
Air Sampling	1. Pre-carbon 2. Post-carbon	1st Week: During initial startup once extraction rates and vacuum influence have been normalized 2nd – 4th Week: Once per week
Extraction Rate*	1. Each extraction well 2. Fresh air extraction (if open) 3. Combined effluent pre-carbon 4. Effluent post-carbon	1st Week: 3 or more times per day 2nd – 4th Week: up to 3 times per week/as necessary
Air Temperature*	1. Before Regenerative Blower 2. After Regenerative Blower	1st Week: 3 or more times per day 2nd – 4th Week: up to 3 times per week/as necessary
Vacuum Influence	11 vapor monitoring points inside site building and adjacent JCP cabinetry	1st Week: 3 or more times per day 2nd – 4th Week: up to 3 times per week/as necessary

*these parameters should be measured in conjunction with one another

5.0 Intermediate Operational Period – Month 2 through 6

Following the first month of operating the SVE system, with NYSDEC approval, the monitoring and inspection frequency can be relaxed provided the system is functioning within design parameters and does not require continued monitoring at the frequency described in Table 2 above. During months 2 through 6, monitoring is expected to be reduced to a monthly frequency, as indicated in Table 3, or depending on GAC vessel replacement frequency, may need to remain weekly until a more-predictable frequency is established.

Table 3: Intermediate Monitoring – Months 2 through 6

Parameter	Location(s)	Frequency
PID monitoring	1. Each of the five (5) extraction wells 2. Pre-carbon 3. Mid-carbon	Monthly or Weekly depending on carbon treatment requirements (in conjunction with Extraction

	4. Post-carbon	Rate and Air Temp measurements)
Air Sampling	1. Pre-carbon 2. Post-carbon	Monthly
Extraction Rate	1. Each extraction well 2. Fresh air extraction (if open) 3. Combined effluent pre-carbon 4. Effluent post-carbon	Monthly or Weekly depending on carbon treatment requirements (in conjunction with PID and Air Temp measurements)
Air Temperature	1. Before Regenerative Blower 2. After Regenerative Blower	Monthly or Weekly depending on carbon treatment requirements (in conjunction with PID and Extraction Rate measurements)
Vacuum Influence	11 vapor monitoring points inside site building and adjacent JCP cabinetry	Monthly/as necessary

6.0 Longer Term Operation, Monitoring & Maintenance – Post Month 6

Following the first six (6) months of operation, the carbon treatment requirements (i.e., required change out frequency based on breakthrough) should be more predictable to allow for monthly operation and maintenance. The telemetry system discussed in Section 2.7 above will provide real-time data which will allow most of the monitoring to be done from a computer. There will still be a need for monthly visits to ensure the system is functioning properly and to gather data on the parameters in Table 4 below:

Table 4: Long Term Monitoring – Post Month 6

Parameter	Location(s)	Frequency
PID monitoring	1. Each of the five (5) extraction wells 2. Pre-carbon 3. Mid-carbon 4. Post-carbon	Monthly, or more depending on carbon treatment (in conjunction with Extraction Rate and Air Temp measurements)
Air Sampling	1. Pre-carbon 2. Post-carbon	Month 9, Month 12, then quarterly or semi-annually
Extraction Rate	1. Each extraction well 2. Fresh air extraction (if open) 3. Combined effluent pre-carbon 4. Effluent post-carbon	Monthly, or more depending on carbon treatment (in conjunction with PID and Air Temp measurements)

Air Temperature	1. Before Regenerative Blower 2. After Regenerative Blower	Monthly, or more depending on carbon treatment (in conjunction with PID and Extraction Rate measurements)
Vacuum Influence	11 vapor monitoring points inside site building and adjacent JCP cabinetry	Monthly/as necessary

7.0 Monthly Reporting

EnviroTrac will provide monthly reports which contain:

1. Inspection/Maintenance forms,
2. SVE Monitoring forms,
3. regular/irregular maintenance items,
4. duration of operation, and
5. all sampling data which was obtained during reporting period.

Monthly reports should be submitted on the 10th day of the month following the monthly reporting period (e.g., a July monthly report should be submitted by the 10th of August and contain all maintenance, monitoring, repairs, etc. which occurred in July).

8.0 System Optimization/Site Management

Following one year of operating the SVE system, a substantial amount of data will be available to determine the approximate mass of PCE that has been removed from the site which may help estimate how much longer the system may need to run, or if there is any potential for system optimization.

After a few years of operation, it is anticipated that enough mass will have been removed such that carbon treatment will no longer be necessary and the SVE system will essentially be functioning as a sub-slab-depressurization system (SSDS). Once this stage in remediation is reached, the existing system will likely be too robust and inefficient, and elimination or modification of system components may be necessary.

This OM&M will be referenced and/or modified accordingly and be contained within the Site Management Plan (SMP) for the Former Cleaners Products Supply site. The SMP will lay out the site-wide specifics for long term operation, monitoring and maintenance of site-wide engineering and institutional controls (ECs/ICs), which will include operation of the SVE system, groundwater monitoring, or other ICs that will be part of the final remedy described in the Record of Decision.

Appendix A

SOIL VAPOR EXTRACTION SYSTEM

OPERATION AND MAINTENANCE MANUAL

Project:

NYSDEC – Barnett Ave
50-45 Barnett Ave
Queens, NY

Prepared By:

EnviroTrac Ltd.
5 Old Dock Road
Yaphank, NY 11980

June 2017

Table of Contents

Section 1 – Soil Vapor Extraction Equipment

- Airtech **#3BA1900-7AT16** Regenerative Blower Specifications, Operating and Maintenance Instructions
- Waste2Water Air/Water Separator **#AWS80-4** Specifications
- Waste2Water **#IPF-400** In-Line Air Filter Specifications
- Solberg **#SLCR400** Discharge Silencer Specifications
- Solberg **#FS-231P-200** Fresh Air Inlet Silencer Specifications
- Goulds **#1MS1C5E4** Centrifugal Transfer Pump Specifications, Installation, Operation and Maintenance Instructions
- Carbtrol **#G3S** Vapor Phase Carbon Drum Specifications

Section 2 – Soil Vapor Extraction Instrumentation/Switches

- Noshok Vacuum & Pressure Gauge Specifications - Installation & Maintenance Guide
- Dwyer Instruments **#616W-7-LCD** Differential Pressure Transmitter Specifications – Installation and Operating Instructions
- Dwyer Instruments **#TTW-104** Temperature Transmitter Specifications – Installation and Operating Instructions
- Wika **#TI.20** Bimetal Thermometer Specifications
- Key Instruments **#FR5A75PL** Rotameter Air Flow Meter Specifications
- Ametek Rotron **#FM40C450Q** Venturi Air Flow Meter Specifications
- Wika **#213.53S** Pressure Gauge Specifications

Section 3 – Heating, Ventilation, Lighting

- Dayton **#1HLA3** Shutter Mounted Exhaust Fan Operating Instructions and Parts Manual
- Dayton **#2E816** Line Voltage Mechanical Thermostat Specifications
- Dayton **#3UG17** Fan Forced Wall Heater Operating Instructions and Parts Manual
- Columbus Electric **#D2022H10BA** 2-Pole Line Voltage Mechanical Thermostat Specifications
- Lumapro **#3RB17** Vapor Tight Light Fixtures Operating Instructions and Parts Manual

Section 4 – Control Panel Materials

- Cyberpower **CP350COM** Uninterruptible Power Supply Technical Specifications
- Wiegmann **ETR201F** Thermostat Technical Specifications
- Weidmuller 6mm Terminal Blocks **#WDU4** Specifications
- Omron 24VDC Power Supply **#S8VK-G01524** Specifications

EnviroTrac

- Lovato 1-Pole Breaker **#P1MB1PD06** Specifications
- Lovato 3-Pole Breaker **# P1MB3PD63** Specifications
- Schneider Electric Variable Frequency Drive **#ATV312HD15M3** Specifications, Installation and Programming Manuals
- Multitech Cellular Modem **#MTCMR-C2** Specifications
- Signal Transformer **#241-6-10** Specifications
- EOS PLC **#B1** Specifications and Manual
- Iboco Wire Duct **#T1** Specifications
- Finder Relay **#34.51.7.024.0010** Specifications
- Finder Relay Socket **#93.01.0.024** Specifications
- Eaton Manual Motor Protector **#XTPR2P5BC1** Specifications
- Eaton Motor Contactor **# XTCE007B10** Specifications
- Eaton Motor Protector/Contactor Connection Kit **#XTPAXTPCB** Specifications
- ABB Overload Relay **#TA75DU-52** Specifications
- ABB Overload Relay Mounting Kit **#DB80** Specifications
- Wiegmann Enclosure **#ALN4363012** & Back Panel **#ALNP3630** Specifications
- Dayton Axial Ventilation Fan **#2RTK6** Operating Instructions Manual
- IDEC Pilot Lights and Switches **TW Series 22mm** Specifications
- Curtis Hour Meter **#700QN001048150D100230A** Specifications

Section 5 – System Drawings

- Soil Vapor Extraction System Layout
- Process and Instrumentation Diagram
- Electrical Single Line Diagram
- Control Panel Exterior Layout
- Control Panel Interior Layout
- Control Panel Schematic

1. Soil Vapor Extraction Equipment

EnviroTrac

AIRTECH® VACUUM

3BA1900

Vacuum/Pressure Regenerative Blower

Features:

- Cooler running, outboard bearing provides maintenance-free operation
- Environmentally friendly oil-free technology
- Extremely quiet operation
- All motors are standard TEFC with Class F insulation, UL recognized, CE Compliant
  Explosion-Proof motors available
- Custom construction blowers are available
- Rugged die cast aluminum construction

Performance curve for Vacuum pump

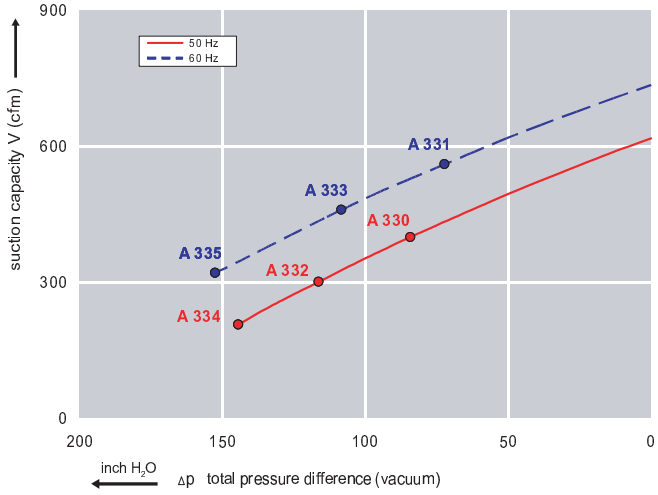

Performance curve for Compressor

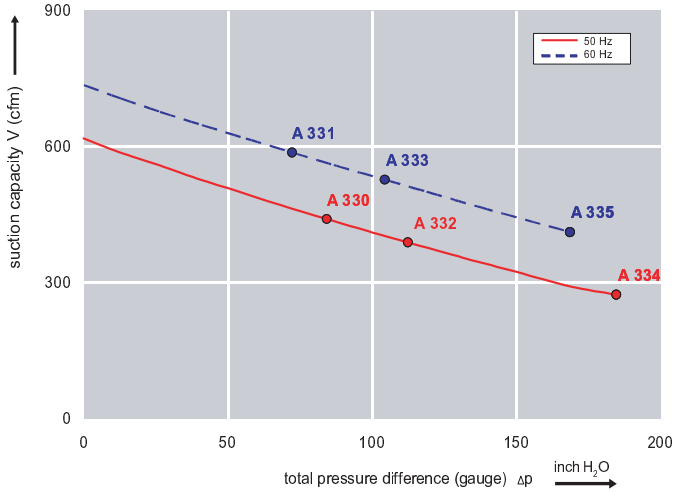

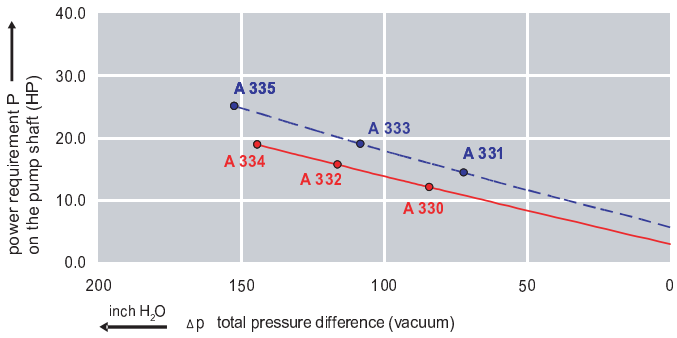

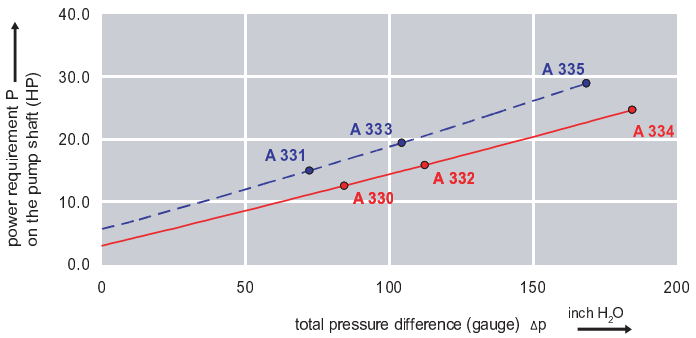

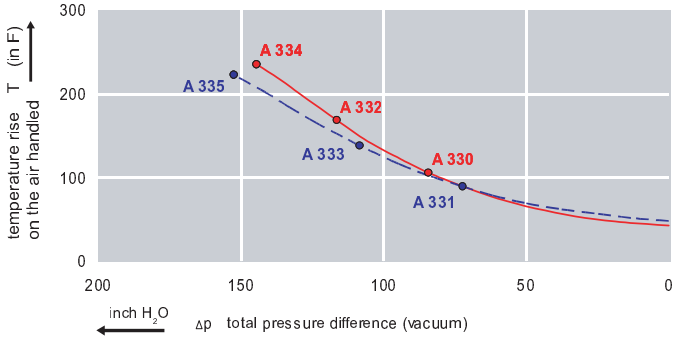

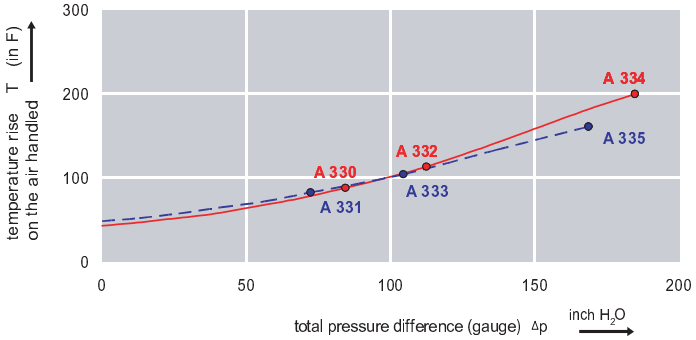

3BA1900

Vacuum/Pressure Regenerative Blower

Dimensions: (inches)

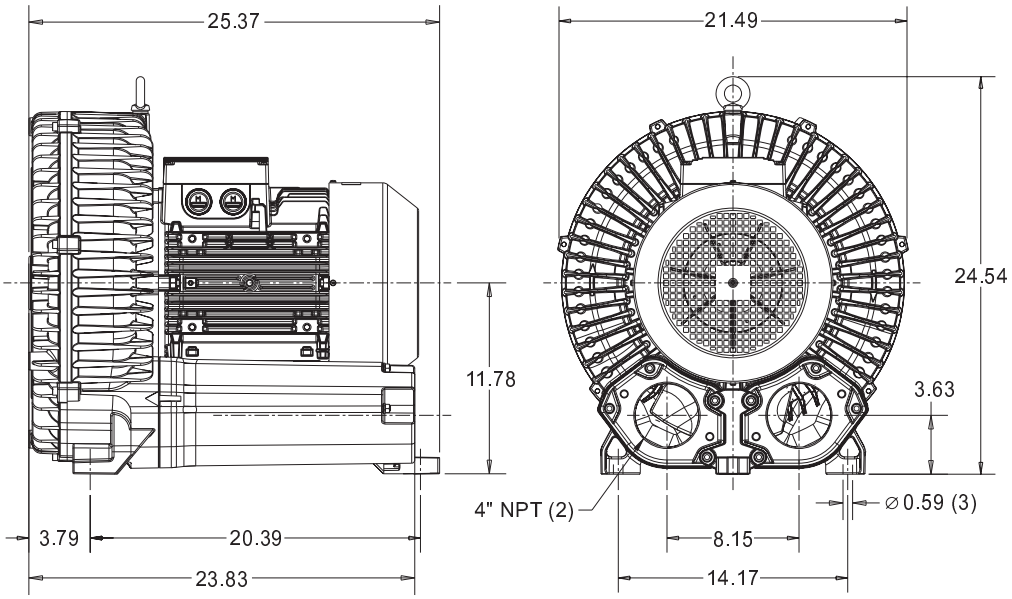

Recommended Accessories:

Relief valve:

VC100Z (Vacuum)

PC100Z (Pressure)

Filter:

ATF-400-21138 (Vacuum)

AFS-234-400-10 (Pressure)

Specifications subject to change without notice. Please contact factory for specification updates.

Selection & Ordering Data - Type 3BA1900

Curve No.	Order No.	Frequency	Rated power	Input voltage		Input current		Permissible total differential pressure		Sound pressure level	Weight
								Vacuum	Compressor		
		Hz	HP	V		A		inch H2O	inch H2O	dB(A)	lbs
3~ 50/60 Hz IP55 insulation material class F											
A 330	3BA1900-7AT06	50	10.72	200D ... 240D	345Y ... 415Y	31.5D	18.2Y	-76	76	74	265
A 331	3BA1900-7AT06	60	12.06	220D ... 250D	415Y ... 460Y	31.5D	18.2Y	-60	56	79	265
A 332	3BA1900-7AT16	50	16.76	200D ... 240D	345Y ... 415Y	48.5D	28.0Y	-116	112	74	295
A 333	3BA1900-7AT16	60	19.44	220D ... 250D	415Y ... 460Y	50.0D	29.0Y	-108	104	79	295
A 334	3BA1900-7AT36	50	24.80	200D ... 240D	345Y ... 415Y	64.5D	37.0Y	-145	185	74	314
A 335	3BA1900-7AT36	60	28.55	220D ... 250D	415Y ... 460Y	68.0D	39.0Y	-153	169	79	314

Suitable for 208 Volt Operation

All curves are rated at 14.7 psia and 68° F ambient conditions and are reported in SCFM referenced to 68° F and 14.696 psia sea level conditions. Curve values are nominal, actual performance may vary by up to 10% of the values indicated. For inlet temperatures above approximately 80 °F or for handling gases other than air, please contact your Airtech sales representative for assistance.

AIRTECH®
VACUUM

Operating and Maintenance Instructions

3BA Regenerative Blowers

INSTALLATION & OPERATING MANUAL
3BA REGENERATIVE BLOWERS

Table of Contents

Section:	Page Number:
1. Pump Ranges	3
Table 1: 3 Phase, Single Stage, 50 Hertz	5
Table 2: 3 Phase, Single Stage, 60 Hertz	6
Table 3: 3 Phase, Two/Three Stage, 50 Hertz	7
Table 4: 3 Phase, Two/Three Stage, 60 Hertz	8
Single Stage – Approx. Temperature Rise	10
Two/Three Stage – Approx. Temperature Rise	11
Tightening Torque Specifications	12
2. Installation	14
Installation Procedure	15
3. Start-up	17
4. Maintenance and Servicing	18
Troubleshooting Chart	19
Lifting	21
Storage	22
Disposal	22
5. Exploded-View Drawings	23
3BA1 Single-Stage	23
3BA1 Two-Stage	24
3BA7 Single-Stage	25
3BA7 Two-Stage	26
Warranty Statement	27

1. Pump Ranges

These operating instructions cover the Airtech 3BA side channel vacuum pumps and compressors supplied with standard TEFC motors. Other configurations are available including V-belt driven units, units with explosion proof motors, mechanical seals, magnetic drives, coatings and modifications for high pressure service. Airtech can provide any combination of modifications to meet your application requirements. Such blowers, however, are outside the scope of this manual.

Description

All regenerative blowers are dynamic compression devices and utilize a non-contacting impeller to accelerate the gas and a specially designed housing to compress the gas. Cooling is accomplished by using the motor fan to blow air over the housing. In larger models, the housing is specially designed with cooling fins to allow a wider range of operation. Both the inlet and outlet ports have built-in silencers and mesh screens. Both the inlet and outlet have an inside connection thread corresponding to DIN ISO 228. On larger units, multiple suction and discharge connection configurations may be available.

The wetted parts are constructed of Aluminum on all models. The blower shares a bearing with the motor. The seal between the bearing and the motor is not gas tight in most models, therefore these blowers are not recommended for handling of toxic or explosive gases. (Contact Airtech Vacuum, Inc. for additional options if explosive or toxic gases will be handled.)

A full range of accessory items are available, including vacuum or pressure relief valves, check valves, suction filters, motor starters, vacuum/pressure cross-over valves, and in-line filters.

Application/Installation Environment

CAUTION! These blowers are designed for use in general industry. Suitable personnel protection according to OSHA requirements is provided, but the equipment should not be operated in residential settings.

Airtech blowers can be operated as either vacuum pumps or compressors. They are suitable for use with air having a relative humidity up to 90 percent, but not generally suitable for handling corrosive or erosive gases. Special versions for toxic or aggressive gases may be available. Use of the standard blower in aggressive environments may cause damage to the blower or exposure to gases being handled in the local environment.

CAUTION! Dangerous (flammable or explosive) or aggressive (corrosive) gases should not be handled by the standard blower.

Handling of flammable or aggressive gases and vapors may be possible by using a specially configured or modified blower. Contact factory for additional information. The standard blower is not suitable for operation in explosive environments as defined by NFPA 70. Contact factory for assistance.

CAUTION! The ambient and suction temperatures should be between 40 and 105 F. For temperatures outside this region, please contact the factory.

The maximum permissible pressure difference for vacuum or pressure is dependant on the motor rating (See Tables 1 to 4 for detailed information by model number.) and power supply frequency. The figures in Tables 1 to 4 are computed assuming an ambient temperature of 77 F (25 C) and a local barometric pressure of 1013 mbar (sea level). Operation at an ambient temperature of 104 F (40C) is the maximum permissible, and will result in a reduction of 10 percent on maximum vacuum or pressure attainable by the unit. For temperatures between 77 F and 104 F, reduce the maximum pressure reduction is a linear function of temperature.

Table 1. Three-phase, Single Stage, 50 Hertz

Model	Rated Power HP/kW	Voltage	Motor Current (Amps)	Open Flow Capacity CFM/m3/hr	Maximum Pressure (mbar)	Sound Pressure Level (dBA)
3BA1300-7AT06	.33/.25	200-240/345-415	2.1/1.2	48/82	-100/100	53
2BA1300-7AT16	.54/.4	200-240/345-415	2.6/1.5	48/82	-120/130	53
3BA1400-7AT06	.94/.7	200-240/345-415	3.8/2.2	84/142	-120/120	63
2BA1400-7AT16	1.15/.85	200-240/345-415	4.2/2.4	84/142		63
3BA1400-7AT26	1.75/1.3	200-240/345-415	5.7/3.3	84/142	-170/200	63
3BA1500-7AT06	1.15/.85	200-240/345-415	4.2/2.4	120/204	-100/100	64
3BA1500-7AT16	1.75/1.3	200-240/345-415	5.7/3.3	120/204	-170/170	64
3BA1500-7AT26	2.15/1.6	200-240/345-415	7.5/4.3	120/204	-200/190	64
3BA1500-7AT36	2.96/2.2	200-240/345-415	9.7/5.6	120/204	-220/270	64
3BA1600-7AT06	2.15/1.6	200-240/345-415	8.5/4.9	188/320	-160/150	69
3BA1600-7AT16	2.96/2.2	200-240/345-415	9.7/5.6	188/320	-190/190	69
3BA1600-7AT26	4.04/3.0	200-240/345-415	12.5/7.2	188/320	-260/270	69
3BA1600-7AT36	5.4/4.0	200-240/345-415	13.0/7.5	188/320	-290/360	69
3BA1630-7AT06	2.15/1.6	200-240/345-415	8.5/4.9	240/408	-160/150	69
3BA1630-7AT16	2.96/2.2	200-240/345-415	9.7/5.6	240/408	-190/190	69
3BA1630-7AT26	4.04/3.0	200-240/345-415	12.5/7.2	240/408	-260/270	69
3BA1630-7AT36	5.4/4.0	200-240/345-415	15.6/9.0	240/408	-260/290	69
3BA1800-7AT06	5.4/4.0	200-240/345-415	15.6/9.0	280/476	-200/200	70
3BA1800-7AT16	7.4/5.5	200-240/345-415	23/13.3	280/476	-300/300	70
3BA1800-7AT26	10/7.5	200-240/345-415	29/16.7	280/476	-320/430	70
3BA1830-7AT06	5.4/4	200-240/345-415	15.6/9	400/680	-200/200	76
3BA1830-7AT16	7.4/5.5	200-240/345-415	23/13.3	400/680	-320/430	76
3BA1830-7AT26	10/7.5	200-240/345-415	29/16.7	400/680	-320/430	76
3BA1900-7AT06	10.8/8	200-240/345-415		568/965		74
3BA1900-7AT16	16.8/12.5	200-240/345-415	48.5/28	568/965	-290/280	74
3BA1900-7AT36	25/18.5	200-240/345-415	64.5/37	568/965		74
3BA1930-7AT16	16.8/12.5	200-240/345-415	48.5/28	744/1264	-290/280	71
3BA1930-7AT36	25/18.5	200-240/345-415	64.5/37	744/1264	-310/310	71
3BA7210-0AT167	.75/.55	200-240/345-415	2.8/1.6	28/48	-230/290	57
3BA7310-0AT167	.75/.55	200-240/345-415	2.8/1.6	40/68	-250/250	57
3BA7410-0AT167	1.5/1.1	200-240/345-415	5.4/3.1	50/84	-300/380	58
3BA7510-0AT168	2/1.5	200-240/345-415	7.5/4.3	70/120	-370/650	64
3BA7510-0AT268	3/2.2	200-240/345-415	9.7/5.6	70/120	-310/430	64
3BA7610-0AT168	3/2.2	200-240/345-415	9.7/5.6	96/163	-310/430	65
3BA7610-0AT368	4.4/3.3	200-240/345-415	13/7.5	96/163	-500/750	65

Table 2. Three-phase, Single-stage, 60 Hz

Model	Rated Power HP/kW	Voltage	Motor Current (Amps)	Open Flow Capacity CFM/m3/hr	Maximum Pressure (mbar)	Sound Pressure Level (dBA)
3BA1300-7AT06	.39/.29	220-250/415-460	1.74/1.0	60/102	-100/100	56
2BA1300-7AT16	.67/.5	220-250/415-460	2.6/1.5	60/102	-150/160	56
3BA1400-7AT06	1.12/.83	220-250/415-460	3.75/2.15	105/179	-130/130	64
3BA1400-7AT16	1.28/.95	220-250/415-460	4.35/2.5	105/179		64
3BA1400-7AT26	2/1.5	220-250/415-460	5.5/3.2	105/179	-210/200	64
3BA1500-7AT06	1.28/.95	220-250/415-460	4.35/2.5	150/255	-80/70	70
3BA1500-7AT16	2/1.5	220-250/415-460	5.5/3.2	150/255	-150/140	70
3BA1500-7AT26	2.7/2.05	220-250/415-460	7.5/4.4	150/255	-220/210	70
3BA1500-7AT36	3.4/2.55	220-250/415-460	9.0/5.3	150/255	-260/290	70
3BA1600-7AT06	2.7/2.05	220-250/415-460	7.5/4.4	235/400	-160/150	72
3BA1600-7AT16	3.4/2.55	220-250/415-460	9.0/5.3	235/400	-190/190	72
3BA1600-7AT26	4.6/3.45	220-250/415-460	12.0/6.5	235/400	-240/230	72
3BA1600-7AT36	6.1/4.6	220-250/415-460	15.2/8.5	235/400	-320/310	72
3BA1630-7AT06	2.7/2.05	220-250/415-460	7.5/4.4	300/510	-160/150	72
3BA1630-7AT16	3.4/2.55	220-250/415-460	9.0/5.3	300/510	-190/190	72
3BA1630-7AT26	4.6/3.45	220-250/415-460	12.0/6.5	300/510	-240/230	72
3BA1630-7AT36	6.1/4.6	220-250/415-460	15.2/8.5	300/510	-260/260	72
3BA1800-7AT06	6.1/4.6	220-250/415-460	15.2/8.5	350/595	-160/160	74
3BA1800-7AT16	8.4/6.3	220-250/415-460	20/11.2	350/595	-300/280	74
3BA1800-7AT26	11.5/8.6	220-250/415-460	27.5/15	350/595	-350/400	74
3BA1830-7AT06	6.4/4.6	220-250/415-460	15.2/8.5	500/850	-160/160	79
3BA1830-7AT16	8.4/6.3	220-250/415-460	20/11.2	500/850	-300/280	79
3BA1830-7AT26	11.5/8.6	220-250/415-460	27.5/15	500/850	-350/400	79
3BA1900-7AT06	12.1/9	220-250/415-460		710/1207		79
3BA1900-7AT16	19.5/14.5	220-250/415-460	50/29	710/1207	-270/260	79
3BA1900-7AT36	28.7/21.3	220-250/415-460	68/39	710/1207		79
3BA1930-7AT16	19.5/14.5	220-250/415-460	50/29	930/1581	-270/260	75
3BA1930-7AT36	28.7/21.3	220-250/415-460	68/39	930/1581	-300/280	75
3BA7210-0AT167	1.1/.83	220-250/415-460	3.75/2.15	35/60	-270/320	62
3BA7310-0AT167	1.1/.83	220-250/415-460	3.75/2.15	48/82	-260/250	62
3BA7410-0AT167	2/1.5	220-250/415-460	5.5/3.2	60/102	-340/370	62

When operating at altitudes above 3280 feet (1000 m) above mean sea level, contact Airtech Inc.

CAUTION! Operation of the unit outside the recommended range of pressures and ambient conditions will result in shorted operating life.

Table 3. 3 Phase, Two/Three Stage, 50 Hertz

Model	Rated Power HP/kW	Voltage	Motor Current (Amps)	Open Flow Capacity CFM/m3/hr	Maximum Pressure (mbar)	Sound Pressure Level (dBA)
3BA1310-7AT26	.94/.7	200-240/345-415	3.8/2.2	48/81.6	-120/120	55
3BA1410-7AT36	2.15/1.6	200-240/345-415	7.5/4.3	84/142.8	-200/190	66
3BA1410-7AT46	2.96/2.2	200-240/345-415	9.7/5.6	84/142.8	-320/420	66
3BA1510-7AT46	4.04/3.0	200-240/345-415	12.5/7.2	121.6/206.7	-340/410	72
3BA1510-7AT56	5.39/4.0	200-240/345-415	17.4/10	121.6/206.7	-390/440	72
3BA1610-7AT36	2.9/2.2	200-240/345-415	9.7/5.6	188/319.6	-190/190	73
3BA1610-7AT26	4.04/3.0	200-240/345-415	12.5/7.2	188/319.6	-260/270	73
3BA1610-7AT36	5.39/4.0	200-240/345-415	13.0/7.5	188/319.6	-290/360	73
3BA1610-7AT46	7.41/5.5	200-240/345-415	23/13.3	188/319.6	-420/500	73
3BA1610-7AT56	10.1/7.5	200-240/345-415	29/16.7	188/319.6	-420/610	73
3BA1640-7AT36	5.39/4.0	200-240/345-415	13.0/7.5	280/476	-290/360	74
3BA1640-7AT46	7.41/5.5	200-240/345-415	23/13.3	280/476	-420/500	74
3BA1640-7AT56	10.1/7.5	200-240/345-415	29/16.7	280/476	-420/610	74
3BA1810-7AT16	7.4/5.5	200-240/345-415	23/13.3	280/476	-420/500	74
3BA1810-7AT26	10.1/7.5	200-240/345-415	29/16.7	280/476	-320/430	74
3BA1810-7AT36	14.8/11	200-240/345-415	29/16.7	280/476	-430/600	74
3BA1810-7AT46	20.2/15	200-240/345-415	56.5/32.5	280/476	-460/670	74
3BA1840-7AT26	10.1/7.5	200-240/345-415	29.0/16.7	280/476	-320/430	74
3BA1840-7AT36	14.8/11.0	200-240/345-415	48.5/28.0	280/476	-430/600	74
3BA1910-7AT16	16.8/12.5	200-240/345-415	48.5/28	624/1061	-290/280	74
3BA1910-7AT36	26.95/20.	200-240/345-415	-	624/1061	-	74
3BA7220-0AT567	2/1.5	200-240/345-415	7.5/4.3	28/48	-370/650	58
3BA7320-0AT467	1.5/1.1	200-240/345-415	5.4/3.1	40/68	-300/380	58
3BA7320-0AT567	2/1.5	200-240/345-415	7.5/4.3	40/68	-480/450	59
3BA7420-0AT267	2/1.5	200-240/345-415	7.5/4.3	50/84	-480/450	61
3BA7420-0AT567	4.4/3.3	200-240/345-415	13/7.5	50/84	-500/750	61
3BA7520-0AT268	3/2.2	200-240/345-415	9.7/5.6	70/120	-470/460	64
3BA7620-0AT368	4.4/3.3	200-240/345-415	13/7.5	96/163	-500/750	68
3BA7620-0AT468	5.4/4	200-240/345-415	14/8.1	96/163	-370/650	67
3BA7620-0AT568	7.5/5.5	200-240/345-415	19.9/11.5	96/163	-520/750	68
3BA7630-0AT668	10.1/7.5	200-240/345-415	29/16.7	96/163	-420/610	77

Table 4. 3 Phase, Two/Three Stage, 60 Hertz

Model	Rated Power HP/kW	Voltage	Motor Current (Amps)	Open Flow Capacity CFM/m3/hr	Maximum Pressure (mbar)	Sound Pressure Level (dBA)
3BA1310-7AT26	1.11/.83	220-250/415-460	3.75/2.15	60/102	-130/130	61
3BA1410-7AT36	2.7/2.05	220-250/415-460	7.5/4.4	105/179	-220/210	69
3BA1410-7AT46	3.4/2.55	220-250/415-460	9.0/5.3	105/179	-350/440	69
3BA1510-7AT46	4.6/3.45	220-250/415-460	12.0/6.5	152/258	-380/360	74
3BA1510-7AT56	6.1/4.6	220-250/415-460	15.2/8.5	152/258	-410/480	74
3BA1610-7AT36	3.4/2.55	220-250/415-460	9.0/5.3	235/400	-190/190	76
3BA1610-7AT26	4.6/3.45	220-250/415-460	12.0/6.5	235/400	-240/230	76
3BA1610-7AT36	6.4/4.8	220-250/415-460	16.5/9.8	235/400	-320/310	76
3BA1610-7AT46	8.4/6.3	220-250/415-460	20/11.2	235/400	-440/440	76
3BA1610-7AT56	11.5/8.6	220-250/415-460	27.5/15.0	235/400	-440/670	76
3BA1640-7AT36	6.1/4.6	220-250/415-460	15.2/8.5	350/595	-320/310	78
3BA1640-7AT46	8.4/6.3	220-250/415-460	20.0/11.2	350/595	-440/440	78
3BA1640-7AT56	11.5/8.6	220-250/415-460	27.5/15.0	350/595	-440/670	78
3BA1810-7AT16	8.4/6.3	220-250/415-460	20.0/11.2	350/595	-440/440	78
3BA1810-7AT26	11.5/8.6	220-250/415-460	27.5/15.0	350/595	-350/400	78
3BA1810-7AT36	17/12.6	220-250/415-460	50.2/29.0	350/595	-460/600	78
3BA1810-7AT46	23.3/17.3	220-250/415-460	60.0/34.5	350/595	-490/750	78
3BA1840-7AT26	11.5/8.6	220-250/415-460	27.5/15.0	350/595	-350/400	78
3BA1840-7AT36	17/12.6	220-250/415-460	50.2/29.0	350/595	-460/600	78
3BA1910-7AT16	19.5/14.5	220-250/415-460	50.0/29.0	780/1326	-270/260	84
3BA1910-7AT36	31/23	220-250/415-460	--- / ---	780/1326	--- / ---	84
3BA7220-0AT567	2.7/2.05	220-250/415-460	7.5/4.4	35/60	-500/740	62
3BA7320-0AT467	2/1.5	220-250/415-460	5.5/3.2	48/82	-340/370	63
3BA7320-0AT567	2.7/2.05	220-250/415-460	7.5/4.4	48/82	-430/410	63
3BA7420-0AT267	2.7/2.05	220-250/415-460	7.5/4.4	60/102	-430/410	66
3BA7420-0AT567	5.1/3.8	220-250/415-460	13.5/7.8	60/102	-510/850	66
3BA7520-0AT268	3.4/2.55	220-250/415-460	9/5.3	84/143	-500/450	70
3BA7620-0AT368	5.1/3.8	220-250/415-460	13.5/7.8	115/196	-510/850	71
3BA7620-0AT468	6.1/4.6	220-250/415-460	15.2/8.5	115/196	-480/500	71
3BA7620-0AT568	8.4/6.6	220-250/415-460	22.5/12.6	115/196	-520/820	72
3BA7630-0AT668	11.5/8.6	220-250/415-460	27.5/15	115/196	-440/670	80

Operation of any blower is possible at 87 Hertz without modification. When using a VFD to operate the blower at this frequency, refer to the nameplate for limits on vacuum and pressure, current draw and motor performance.

If your specific model number is not listed above, please consult the nameplate on the unit for electrical data. If the model you are installing is listed above, please confirm the data on the nameplate. Data in Tables 1 through 4 is subject to change and is approximate. Be sure to confirm necessary operating data what that on the nameplate before commissioning the unit.

CAUTION! Do not operate any 3BA blower above 87 Hz without consultation with the factory. Failure of the blower motor is possible when operating out of range. Consult with the factory for assistance.

Expected temperature rise of the handled gas at maximum allowable pressure differential and when operating at sea level is indicated below:

Single Stage – Approximate Temperature Rise

Blower Model	Maximum Rise at 50 Hz speed		Maximum Rise at 60 Hz speed	
	Degrees F	Degrees K	Degrees F	Degrees K
3BA1100-7..0.	115	46	136	58
3BA1200-7..0.	65	18	101	38
3BA1300-7..0.	90	32	77	25
3BA1300-7..1.	90	32	140	60
3BA1300-7..2.	90	32	158	70
3BA1400-7..0.	99	37	86	30
3BA1400-7..1.	129	54	122	50
3BA1400-7..2.	149	65	167	75
3BA1500-7..0.	86	30	72	22
3BA1500-7..1.	115	46	97	36
3BA1500-7..2.	138	59	122	50
3BA1500-7..3.	203	95	180	82
3BA1500-7..6.	248	120	248	120
3BA1600-7..0.	81	27	68	20
3BA1600-7..1.	145	63	104	40
3BA1600-7..2.	171	77	176	80
3BA1600-7..3.	225	107	185	85
3BA1600-7..6.	248	120	194	90
3BA1600-7..7.	248	120	248	120
3BA1800-7..0.	104	40	104	40
3BA1800-7..1.	153	67	185	85
3BA1800-7..2.	248	120	221	105
3BA1900-7..0.	97	36	95	35
3BA1900-7..0.	182	83	155	68
3BA1900-7..0.	230	110	212	100
3BA7210-0..1..	126	52	142	61
3BA7310-0..1..	142	61	142	61
3BA7310-0..2..	178	81	187	86
3BA7410-0..1..	194	90	214	101
3BA7510-0..1..	199	93	232	111
3BA7510-0..2..	248	120	234	112
3BA7610-0..1..	244	118	255	124
3BA7610-0..3..	244	118	255	124

Two/Three Stage – Approximate Temperature Rise

Blower Model	Maximum Rise at 50 Hz speed		Maximum Rise at 60 Hz speed	
	Degrees F	Degrees K	Degrees F	Degrees K
3BA1310-7..2.	127	53	165	74
3BA1410-7..3.	154	68	149	65
3BA1410-7..4.	181	83	180	82
3BA1510-7..4.	190	88	176	80
3BA1510-7..5.	194	90	201	94
3BA1610-7..1.	92	33	86	30
3BA1610-7..2.	129	54	118	48
3BA1610-7..3.	176	80	167	75
3BA1610-7..4.	221	105	190	88
3BA1610-7..5.	246	120	266	130
3BA1610-7..7.	176	80	167	75
3BA1610-7..8.	176	80	248	120
3BA1810-7..1.	113	45	-	-
3BA1810-7..2.	185	85	140	60
3BA1810-7..3.	248	120	248	120
3BA1910-7..1.	119	48	115	46
3BA1910-7..2.	203	95	169	76
3BA1910-7..3.	248	12	274	134
3BA7220-0..2..	131	55	171	77
3BA7220-0..5..	165	74	230	110
3BA7320-0..5..	178	81	255	124
3BA7420-0..2..	192	89	176	80
3BA7420-0..5..	250	121	243	117
3BA7520-0..2..	192	89	216	102
3BA7520-0..7..	257	125	230	110
3BA7620-0..3..	255	124	259	126
3BA7620-0..5..	255	124	262	128
3BA7630-0..6..	248	120	248	120

Tightening Torque Specifications

For non-electrical connections

Thread	Ft-lbs maximum torque	Nm maximum torque
M4	2.43	3.3
M5	3.25	4.4
M6	6.49	8.8
M8	19.47	26.4
M10	34.10	46.2
M12	56.76	77

For electrical connections

Thread	Ft-lbs torque	Nm torque
M4	0.6 to 0.9	0.8 to 1.2
M5	1.3 to 1.8	1.3 to 1.8

For metal threaded glands/unions

Thread	Ft-lbs maximum torque	Nm maximum torque
M12x1.5	3 to 4.5	4 to 6
M16x1.5	3.7 to 5.5	5 to 7.5
M20x1.5	4.4 to 6.6	6 to 9
M32x1.5	5.9 to 8.9	8 to 12
M40x1.5	5.9 to 8.9	8 to 12

For plastic threaded glands/unions

Thread	Ft-lbs maximum torque	Nm maximum torque
M12x1.5	1.5 to 2.6	2 to 3.5
M16x1.5	2.2 to 3	3 to 4
M20x1.5	3 to 3.7	4 to 5
M32x1.5	3.7 to 5.2	5 to 7
M40x1.5	3.7 to 5.2	5 to 7

Operating above the indicated maximum pressure or vacuum would overload the motor and/or overheat the unit. In addition to the maximum allowable pressure difference, careful consideration should be given to matching the motor protection devices (provided by others) to the expected current draw. In no case should the blower be operated with inadequate motor overload protection.

Since regenerative blowers are dynamic compression devices, the performance limits shown in Tables 1 to 4 are applicable only for a gas with the same specific gravity, dynamic viscosity and chemical characteristics as air. For gases with different physical properties than air, the limits will be different from those shown in the tables. Please contact Airtech for assistance in determining the proper blower size and configuration if handling gases other than air.

A vacuum relief valve or pressure relief valve should always be installed at the suction or discharge of the regenerative blower. This will prevent operation outside the applicable ranges shown in Tables 1 to 4. If the relief valves were not specified in the ordering process, please contact Airtech for details, price and availability of the needed valves before commissioning the unit. Failure to use the proper relief valve may result in failure of the blower due to operation outside the applicable limits; any such failure is outside the scope of Airtech's standard warranty.

WARNING! Be sure to install the necessary personnel protection devices if unexpected shut-down of the unit presents danger of death or injury.

2. Installation

As illustrated in Figure 1, the Airtech 3BA blower can be installed in any physical configuration.

CAUTION! Regenerative blowers can have surface temperatures in excess of 120 F. To avoid burns or other physical injury, take care to avoid contact with the surfaces of the blower during and immediately after operation.

To ensure adequate cooling of the blower during operation, install the blower with the minimum clearance as indicated in the table below.

Minimum installation clearances, 3BA blowers

Range	Distance from fan guard to closest obstruction. (inches/mm)	Distance from cover (opposite of fan) to closest obstruction. (inches/mm)
3BA11 through 3BA14	1.4/34	0.79/20
3BA15 through 3BA19	2.1/53	1.57/40
3BA72 and 3BA73	1.3/34	1.18/30
3BA74 through 3BA76	2.1/54	1.18/30

Please note that it may be desirable, where possible, to allow for larger clearances to allow access for maintenance or repair personnel. The noted clearances are to ensure adequate air flow for cooling only and are a minimum requirement.

Failure to allow for the noted clearances may result in premature failure of the blower due to lack of cooling, even if all other precautions are taken as recommended. For specific advice about installations requiring closer clearances, please contact Airtech, Inc. for recommendations.

Airtech regenerative blowers can be mounted in any configuration, either horizontally or vertically mounted. It is not usually necessary to bolt the smaller blowers to a rigid surface during operation, though this may be desirable to reduce pipe vibration, movement and noise. Larger models should be bolted in place, especially when installed vertically, to prevent possible rotation, damage or injury due to start-up torque.

CAUTION! For installations at altitudes greater than 3250 Feet above sea level there will be a loss in capacity. Please contact your factory representative for assistance in determining the extent of the loss of capacity likely at your specific location.

WARNING! Be sure to follow all local codes and regulations with respect to installation and operation of the blower. The blower motor should be wired to a branch circuit disconnect and all other safety devices recommended by the relevant sections of NFPA 70, National Electrical Code, and in accordance with all applicable state and local regulations and requirements.

Installation Procedure

Perform the installation exactly in accordance with the following steps:

1. For vacuum operation, connect the suction pipe to connection A, and for pressure operation connect the pressure pipe to connection B (See Figure 1). Install startup screens before startup to protect pump from debris.

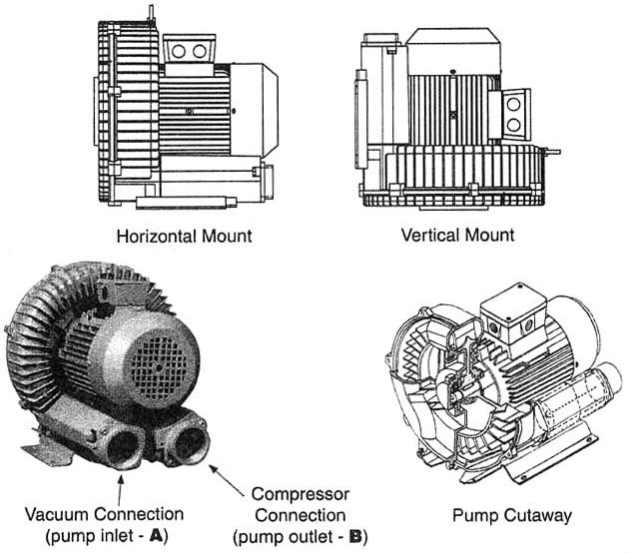

Figure 1

CAUTION! Design your piping system to avoid unnecessary pressure loss, which may significantly affect the operation of any regenerative blower. Contact your Airtech representative for assistance in designing and configuring an appropriate piping system for your application.

For alternation between vacuum and pressure in any application, changeover valves are available. Use of the changeover valve allows the same connection to be used for both vacuum and pressure.

2. The electrical data shown in Tables 1 to 4 should be confirmed by examination of the motor data plate on your 3BA blower. The motors feature Class F insulation as a standard and are UL recognized for applications in both Canada and the United States (CUL). Motors are IEC design IP55, equal to a NEMA TEFC motor design. The connection diagram for the motors can be found in the inside of the terminal box cover. Be sure to confirm that your electrical supply has sufficient capacity to operate the blower according to the nameplate requirements.

3. A magnetic motor starter should always be used to connect the motor to the power supply. It is advisable to use thermal overload motor starters to provide

maximum protection for the motor and wiring. All cabling used on starters should be secured with good quality cable clamps.

We recommend that the motor starters used feature a time delay trip on high amperage to avoid nuisance trips on start-up. When the unit is started cold, over amperage may be experienced for a short time due to the higher resistance of the windings at lower temperatures.

If using a change over or solenoid valve, ensure that the voltage connected to the valve matches that shown on the valve instructions or nameplate. Most valves are rated for 110 Volts 60Hz or 220 Volts 50 Hz. Connection of these valves to higher voltages may result in immediate valve failure.

WARNING! The electrical installation should be made by a qualified electrician and in complete compliance with all NFPA 70 (National Electrical Code) requirements along with all state and local code requirements. The main disconnect and motors starters are assumed to be provided by others.

4. Install the necessary relief valves and confirm their proper operation.

3. Start-up

CAUTION! Do not start the blower motor more than 10 times in one hour. If multiple and frequent start-ups are required by your application, install a minimum run timer in the motor control circuit to avoid decreased motor life and possible fire due to over-starting of the motor.

1. Before operation, confirm the correct direction of rotation by jogging (switching rapidly on and off) the motor and observing the motor fan rotation in the same direction as the arrow. If the direction of rotation is incorrect, lock out the power and switch two leads (three phase) or rewire (single phase) to effect the opposite rotation direction. Recheck the direction of rotation before proceeding.

2. Do not operate the blower at pressure or vacuum ranges that exceed those shown in Tables one through four for the model being installed. This can be achieved by use of the recommended relief valve shown in Table 5.

Note: Relief valves that have been factory pre-set have a label indicating the set pressure and an arrow indicating the direction of flow. The arrow will point into the pipe when installed in vacuum applications and out of the pipe when installed in pressure applications. Do not re-set the relief valve if it has been pre-set from the factory.

In the event the relief valve setting needs to be reset, adjust the set screw to increase or decrease the tension on the spring. Place the blower in operation and note the current draw of the motor. When the current draw of the motor is near the maximum noted on the motor nameplate, tighten the locking nut on the valve and proceed.

3. When checking the current draw of the motor with an ammeter, be sure to confirm the voltage at the motor junction box. Low voltage conditions may result in difficulty starting or in unexpected motor failure or motor starter trips.

Potential Risks for Operators

Noise emission: Free field noise limits are indicated in Tables one through four. Hearing protection is not normally required at the expected noise generation levels in the table; however, local conditions may result in higher ambient noise. If this is the case and local noise exceeds OSHA recommended levels for expected exposure time (typically 85 dBA for eight hours), hearing protection should be used.

4. Maintenance and Servicing

WARNING! Be sure the power supply is disconnected and locked out before attempting to do any maintenance on the unit. It is critical that the unit be locked out from starting during maintenance as severe injury or death could result from exposure to high voltage or rotating parts.

CAUTION! Allow the blower to cool to a surface temperature of lees than 100 F before attempting maintenance. Prolonged exposure to temperatures above 120F can cause severe burns.

Clean the blower surfaces periodically to avoid build up of dust or other debris. Build up of debris can cause overheating and premature failure of the blower.

If an inlet filter is being use, ensure that it remains clean during operation by examining the filter cartridge for debris build up. Replace dirty or clogged filter cartridges.

On pressure units, periodically clean the inlet mesh screen to avoid loss of capacity. If an external inlet filter is used, the filter element should be cleaned monthly or as frequently as required by local conditions. Excessive pressure drop will develop from use of clogged or dirty filters. This pressure drop will degrade blower performance and increase operating temperatures, leading possibly to premature pump failure.

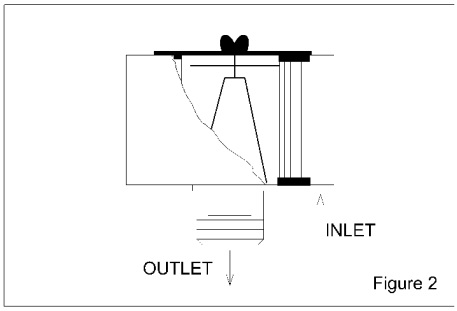

Figure 2

To replace the filter, remove the wing nut and cover. Remove the element and either clean with compressed air or replace. Reassemble in reverse order.

For vacuum applications, the optional in-line vacuum filter must be cleaned regularly, depending on local conditions. Cleaning can be achieved by blowing out with compressed air. If cleaning is not possible, replace the cartridge. Access the cartridge by unhooking the relevant clips and removing the cover.

CAUTION! Do not attempt to check the filter cartridge during operation of the blower. Only check the cartridge after disconnecting the power from the blower and locking out the power to prevent an unexpected start.

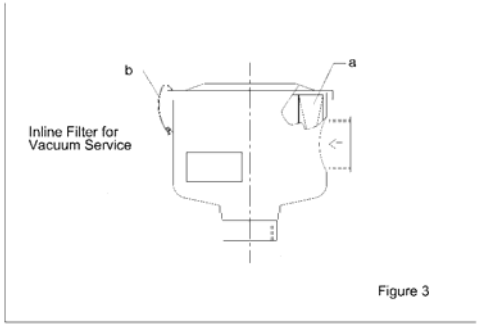

Figure 3

Bearings require regreasing with Exxon/Esso UNIREX N3 or equal grease after approximately 20,000 operating hours (normal conditions) or between 2 and 3 years after installation and commissioning. Do not mix grease types.

Troubleshooting Chart

Fault	Cause	Remedy	Responsible Party
Motor does not start, no noise.	Two or more power legs interrupted	Check fuses, terminals, etc.. for source of interruption and correct.	Electrician
Motor does not start, humming noise.	One power supply lead interrupted	Check fuses, terminals, etc.. for source of interruption and correct.	Electrician
	Impeller is jammed.	Open blower cover, remove debris, clean.	Service Technician
		Check impeller clearance and reset if necessary.	
	Defective Impeller	Replace impeller.	Service Technician
	Defective Bearing	Replace defective bearing.	Service Technician
Trip of motor starter at start-up	Incorrect starter setting	Ensure starter setting is correct (check current on nameplate)	Electrician
	Winding short-circuit	Megger motor	Electrician
	Motor overloaded due to operation of pump at excessive differential pressures.	Inspect filters, mufflers and connection pipes and clean as required. Check relief valve operation. Reset or replace as necessary.	Operator
	Impeller Jammed	See above fault Motor does not start, humming noise, cause jammed impeller.	Operator
Excessive Power Consumption	Lime or other deposits	Decalcify or clean unit as required (see Maintenance Chart)	Operator
No Vacuum or Pressure.	Severe leak in system	Close off pump and run deadheaded to confirm pump is operating properly. If so, find and fix leak in the system.	Operator
	Wrong direction of rotation	Check air flow direction and change direction of rotation if necessary.	Operator Electrician

Insufficient Vacuum	System too small	Use larger system	Operator
	Inlet piping too long or too small.	Increase pipe diameter to reduce pressure loss in inlet piping. Contact Airtech for assistance in determining correct pipe size.	Operator
	Leak at connection to vacuum system.	Check for leaks and repair if necessary.	Operator
	Density of gas handles different from air.	Consider increased limits on operation due to density differences. Consult Airtech, Inc. for assistance.	Airtech Engineering
	Change in impeller geometry due to erosion	Clean impeller and examine for wear. Replace if necessary.	Service Technician
	Inlet filter clogged.	Change filter element; remove clog.	Operator
	Vacuum relief valve incorrectly set.	Reset or replace vacuum relief valve. Contact Airtech for assistance.	Operator
	Seal defective.	Replace seal.	Service Technician
Abnormal flow noises.	Flow speed too high.	Clean pipes or use larger pipes to connect unit to process.	Operator
	Muffler soiled.	Clean muffler inserts, replace if necessary.	Operator
Abnormal running noise	Ball bearing defective or insufficient lubrication on bearing.	Re-grease or replace bearing as required.	Service Technician
Compressor leaky	Seals on muffler defective.	Tighten muffler connection. Replace gasket if necessary.	Operator
	Seals in motor area defective	Replace as necessary.	Service Technician

Repair on-site

WARNING! Before attempting an on-site repair, ensure that a qualified electrician has disconnected the motor from the power supply so that accidental starting of the motor is impossible.

After a repair and before re-installation be sure to follow the instructions noted in this manual under “Installation and Operation.”

Lifting

For smaller units (less than 65 lbs/ 30 kgs), it may be possible to lift the units manually. When doing so, be sure to understand the weight of the unit being lifted and to follow good lifting safety procedures.

Model	Weight Lbs/kgs	Model	Weight Lbs/kgs
3BA1300-7AT06	20/9	3BA1310-7AT26	33/15
2BA1300-7AT16	22/10	3BA1410-7AT36	55/25
3BA1400-7AT06	29/13	3BA1410-7AT46	59.5/29
3BA1400-7AT26	37.5/17	3BA1510-7AT46	86/39
3BA1500-7AT06	40/18	3BA1510-7AT56	97/44
3BA1500-7AT16	46.5/21	3BA1610-7AT26	104/47
3BA1500-7AT26	51/23	3BA1610-7AT36	119/54
3BA1500-7AT36	55/25	3BA1610-7AT46	163/74
3BA1600-7AT06	57.5/26	3BA1610-7AT56	172/78
3BA1600-7AT16	64/29	3BA1640-7AT36	128/58
3BA1600-7AT26	75/34	3BA1640-7AT46	172/78
3BA1600-7AT36	90.5/41	3BA1640-7AT56	181/82
3BA1800-7AT06	128/58	3BA1810-7AT16	250/113
3BA1800-7AT16	143/65	3BA1810-7AT26	260/118
3BA1800-7AT26	150/68	3BA1810-7AT36	316/143
3BA1900-7AT06	265/120	3BA1810-7AT46	341/155
3BA1900-7AT16	314/142	3BA1840-7AT26	260/118
		3BA1840-7AT36	316/143
		3BA1910-7AT16	409/186
		3BA1910-7AT36	455/206
3BA7210-0AT167	35.3/16	3BA7220-0AT567	61.7/28
3BA7310-0AT167	35.3/16	3BA7320-0AT567	66.1/30
3BA7410-0AT167	50.7/23	3BA7420-0AT267	72.7/33
3BA7510-0AT168	57.3/26	3BA7420-0AT567	86/39
3BA7510-0AT268	63.9/29	3BA7520-0AT268	88.2/40
3BA7610-0AT168	70.5/32	3BA7620-0AT368	106/48
3BA7610-0AT368	77.2/35	3BA7620-0AT568	143/65
		3BA7630-0AT668	207/94

When lifting 3BA15 through 3BA19 (but not 3BA1943 units) or the 3BA75 through the 3BA76, use the eye bolt provided (eye bolts are not included on smaller units). One attachment point should be sufficient. Ensure that the crane is rated for the weight being lifted.

For the 3BA1943, use the eye bolt and the holes in the feet of the blower to lift and maintain a balanced load.

Storage

The 3BA units should be stored in a clean, dry environment. If stored in an area with a humidity of greater than 80 percent, store in a closed container with desiccant drying agents to avoid damage.

Disposal

Dispose in accordance with all local health and safety regulations.

Spare parts list are available from your local Airtech service center. Please contact your local Airtech representative for assistance.

For additional assistance, please contact:

Airtech, Inc.,
150 South Van Brunt Street
Englewood, NJ, 07631
Phone: 1-201-569-1173
Fax: 201-569-1696.

3BA1 SINGLE STAGE
EXPLODED VIEW

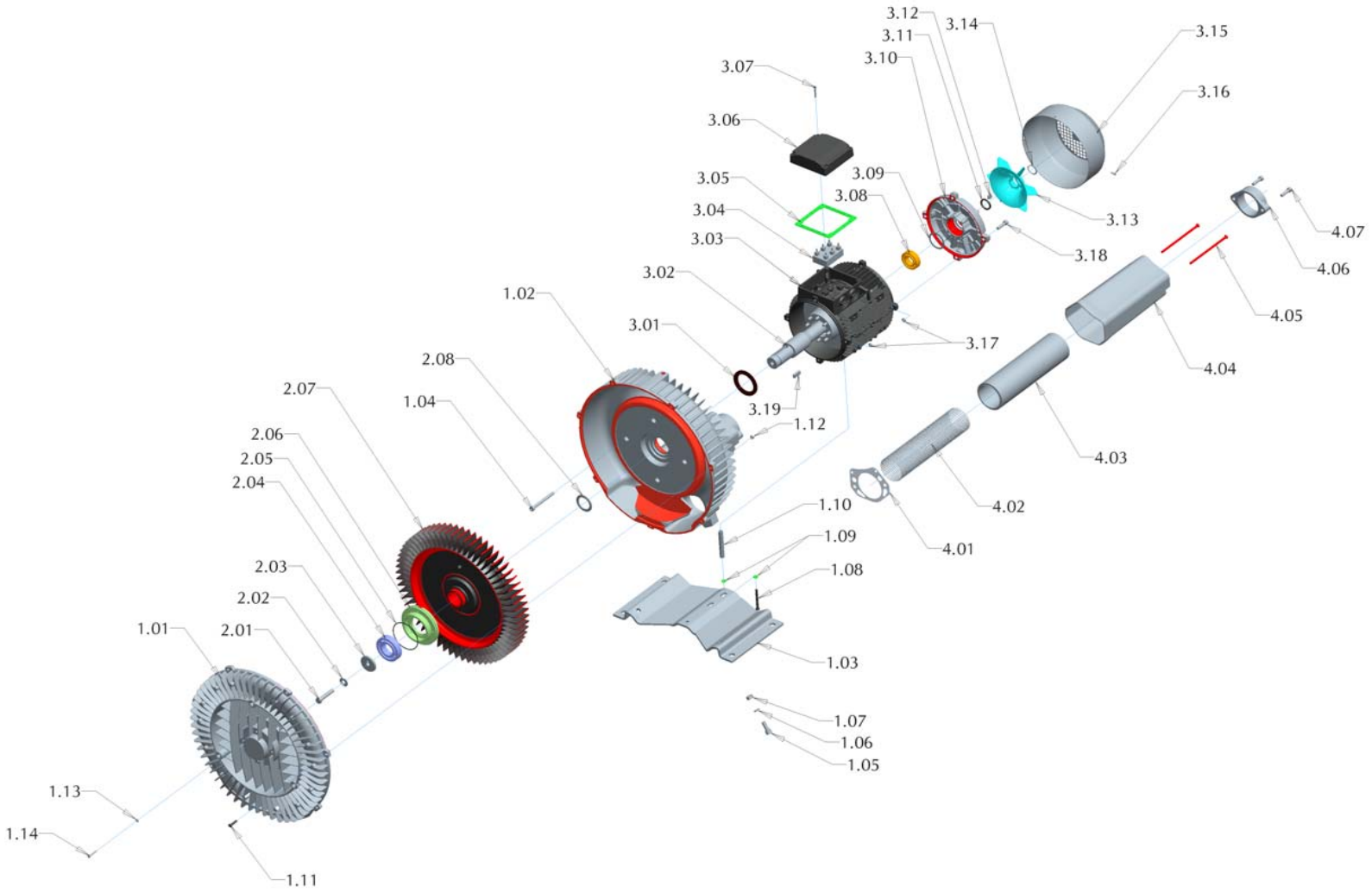

No.	Qty.	Description
1.01	1	Cover
1.02	1	Housing
1.03	1	Mounting Plate
1.04	4	Motor Mounting Screw
1.05	2	Mouting Plate Screw
1.06	2	Mounting Plate Washer
1.07	2	Mouting Plate Nut
1.08	1	Stator Support Screw
1.09	2	Stator Support Washer
1.10	1	Stator Support Sleeve
1.11	8	Cover Mounting Screw
1.12	8	Cover Mounting Nut
1.13	4	Bearing Cover Washer
1.14	4	Bearing Cover Screw
2.01	1	Shaft Screw
2.02	1	Shaft Lock Washer
2.03	1	Disc
2.04	1	Bearing
2.05	1	Bearing Cover O-Ring
2.06	1	Bearing Cover
2.07	1	Impeller
2.08	1	Disc
3.01	1	Seal
3.02	1	Motor Rotor
3.03	1	Stator
3.04	1	Terminal Block
3.05	1	Motor Terminal Box Gasket
3.06	1	Cover For Terminal Box
3.07	4	Terminal Box Cover Screw
3.08	1	Rear Bearing
3.09	1	Bearing Preloading Ring
3.10	1	End Shield
3.11	1	Tolerance Ring
3.12	1	Shaft Key
3.13	1	External Fan
3.14	1	Retaining Ring
3.15	1	Fan Cowl
3.16	4	Fan Cowl Screw
3.17	8	Stator Nut
3.18	4	End Shield Screw
3.19	1	Parallel Key
4.01	2	Silencer Gasket
4.02	2	Silencer Insert
4.03	2	Silencer Insert Filler
4.04	2	Silencer Casing
4.05	4	Silencer Screw
4.06	2	Flange
4.07	4	Flange Screw

3BA1 TWO STAGE
EXPLODED VIEW

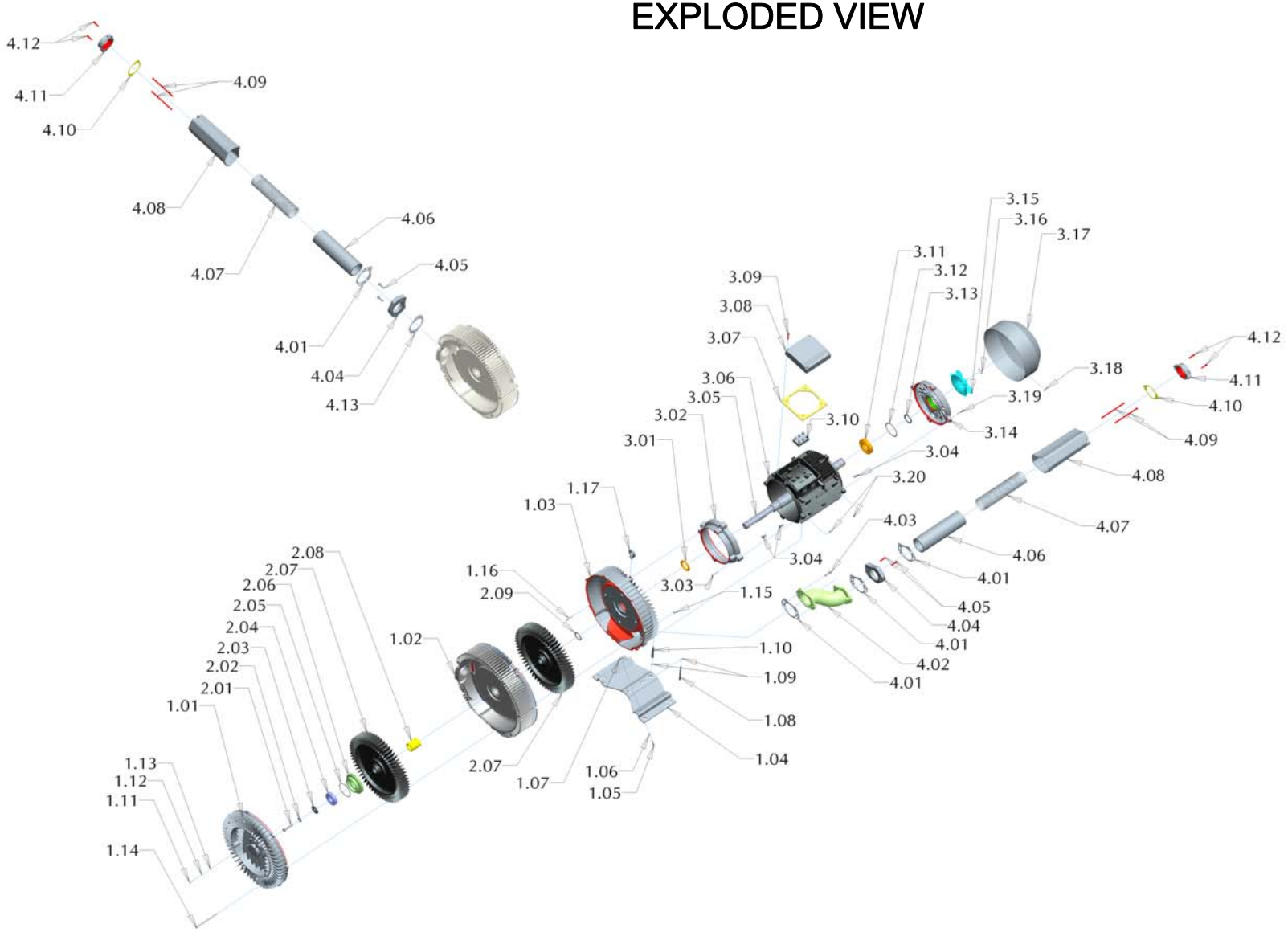

No.	Qty.	Description
1.01	1	Cover
1.02	1	Center Section
1.03	1	Blower Housing
1.04	1	Mounting Plate
1.05	2	Plate Mounting Screw
1.06	2	Mouting Plate Washer
1.07	2	Mounting Plate Nut
1.08	1	Stator Support Screw
1.09	2	Stator Support Washer
1.10	1	Stator Support Sleeve
1.11	4	Bearing Cover Screw
1.12	4	Bearing Screw Washer
1.13	4	Bearing Ring Seal
1.14	8	Cover Mounting Screw
1.15	8	Cover Mounting Nut
1.16	4	Motor Mounting Screw
1.17	1	Lifting Ring
2.01	1	Shaft Screw
2.02	1	Shaft Lock Washer
2.03	1	Disc
2.04	1	Bearing
2.05	1	Bearing Cover O-Ring
2.06	1	Bearing Cover
2.07	2	Impeller
2.08	1	Sleeve
2.09	1	Disk
3.01	1	Shaft Seal Ring
3.02	1	Motor Attachment
3.03	4	Motor Attachment Screw
3.04	3	Parallel Key
3.05	1	Motor Rotor
3.06	1	Stator
3.07	1	Motor Terminal Box Gasket
3.08	1	Cover For Terminal Box
3.09	4	Terminal Box Cover Screw
3.10	1	Terminal Block
3.11	1	Rear Bearing
3.12	1	End Shield Seal
3.13	1	Rotary Shaft Lip Seal
3.14	1	End Shield
3.15	1	External Fan
3.16	1	Retaining Ring
3.17	1	Fan Cowl
3.18	4	Fan Cowl Screw
3.19	4	End Shield Screw
3.20	8	Stator Nut
4.01	4	Silencer Gasket
4.02	1	Silencer Attachment
4.03	2	Silencer Attachment Screw
4.04	2	Silencer Flange
4.05	4	Silencer Flange Screw
4.06	2	Silencer Insert Filler
4.07	2	Silencer Insert
4.08	2	Silencer Casing
4.09	4	Silencer Screw
4.10	2	Flange Gasket
4.11	2	Flnage
4.12	4	Flange Screw
4.13	1	Side Silencer Gasket

3BA7 SINGLE STAGE
EXPLODED VIEW

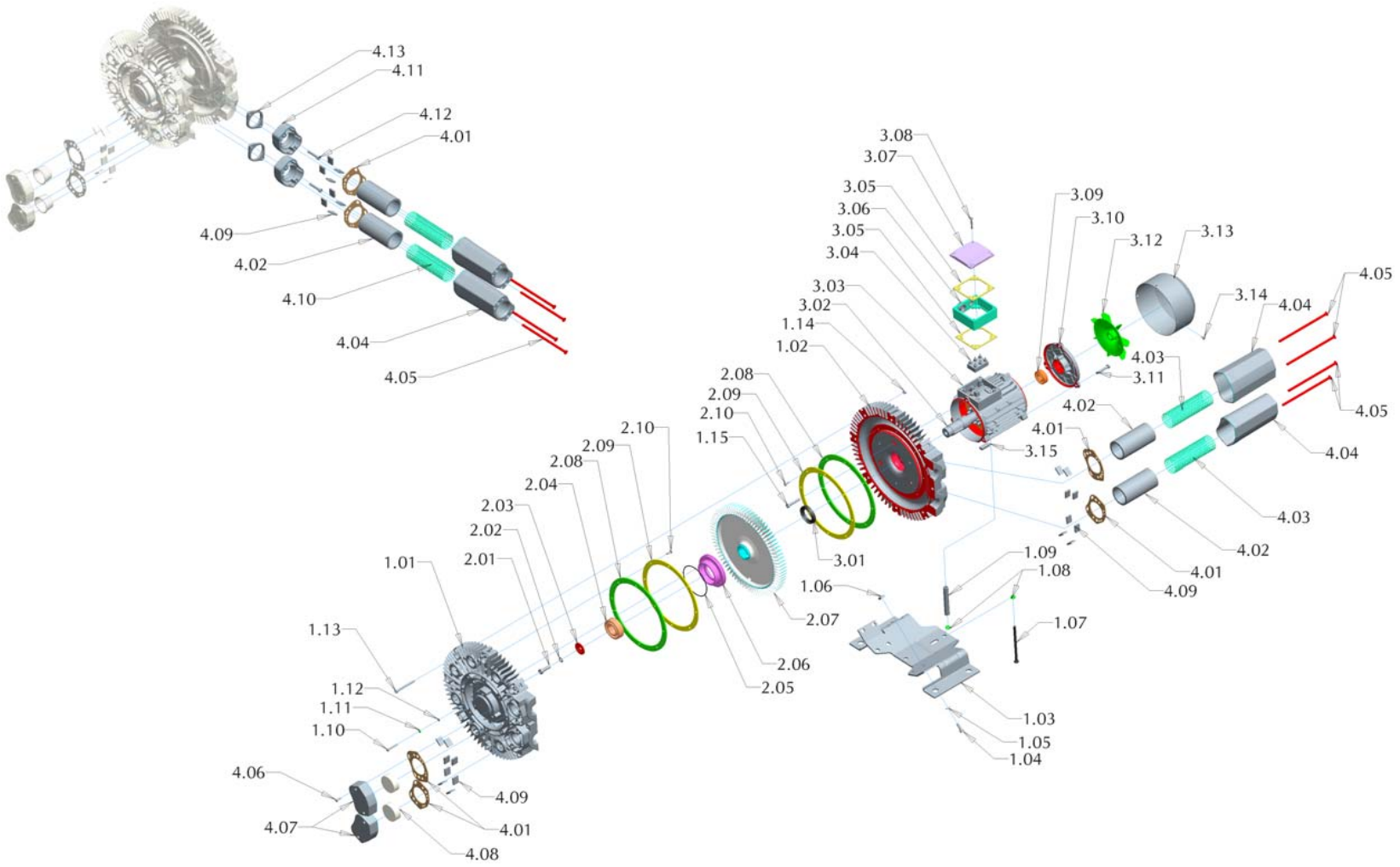

No.	Qty.	Description
1.01	1	Cover
1.02	1	Housing
1.03	1	Mounting Plate
1.04	4	Plate Mounting Screw
1.05	4	Mouting Plate Washer
1.06	4	Mounting Plate Nut
1.07	1	Stator Support Screw
1.08	2	Stator Support Washer
1.09	1	Stator Support Sleeve
1.10	3	Bearing Cover Screw
1.11	3	Bearing Screw Washer
1.12	3	Bearing Ring Seal
1.13	8	Cover Mounting Screw
1.14	8	Cover Mounting Nut
1.15	3	Motor Mounting Screw
2.01	1	Shaft Screw
2.02	1	Shaft Lock Washer
2.03	1	Disc
2.04	1	Bearing
2.05	1	Bearing Cover O-Ring
2.06	1	Bearing Cover
2.07	1	Impeller
2.08	2	Teflon Seal
2.09	2	Retaining Ring
2.10	16	Inner Seal Screw
3.01	1	Shaft Seal Ring
3.02	1	Motor Rotor
3.03	1	Stator
3.04	1	Terminal Block
3.05	2	Motor Terminal Box Gasket
3.06	1	Terminal Box
3.07	1	Cover For Terminal Box
3.08	4	Terminal Box Cover Screw
3.09	1	Rear Bearing
3.10	1	End Shield
3.11	3	End Shield Screw
3.12	1	External Fan
3.13	1	Fan Cowl
3.14	4	Fan Cowl Screw
3.15	1	Parallel Key
4.01	4	Silencer Gasket
4.02	2	Silencer Insert Filler
4.03	2	Silencer Insert
4.04	2	Silencer Casing
4.05	4	Silencer Screw
4.06	4	Flange Screw
4.07	2	Flange Cap
4.08	2	Flange Filler
4.09	16	Filler
4.10	2	Silencer Insert
4.11	2	Flange
4.12	4	Flange Screw
4.13	2	Flange Gasket

3BA7 TWO STAGE
EXPLODED VIEW

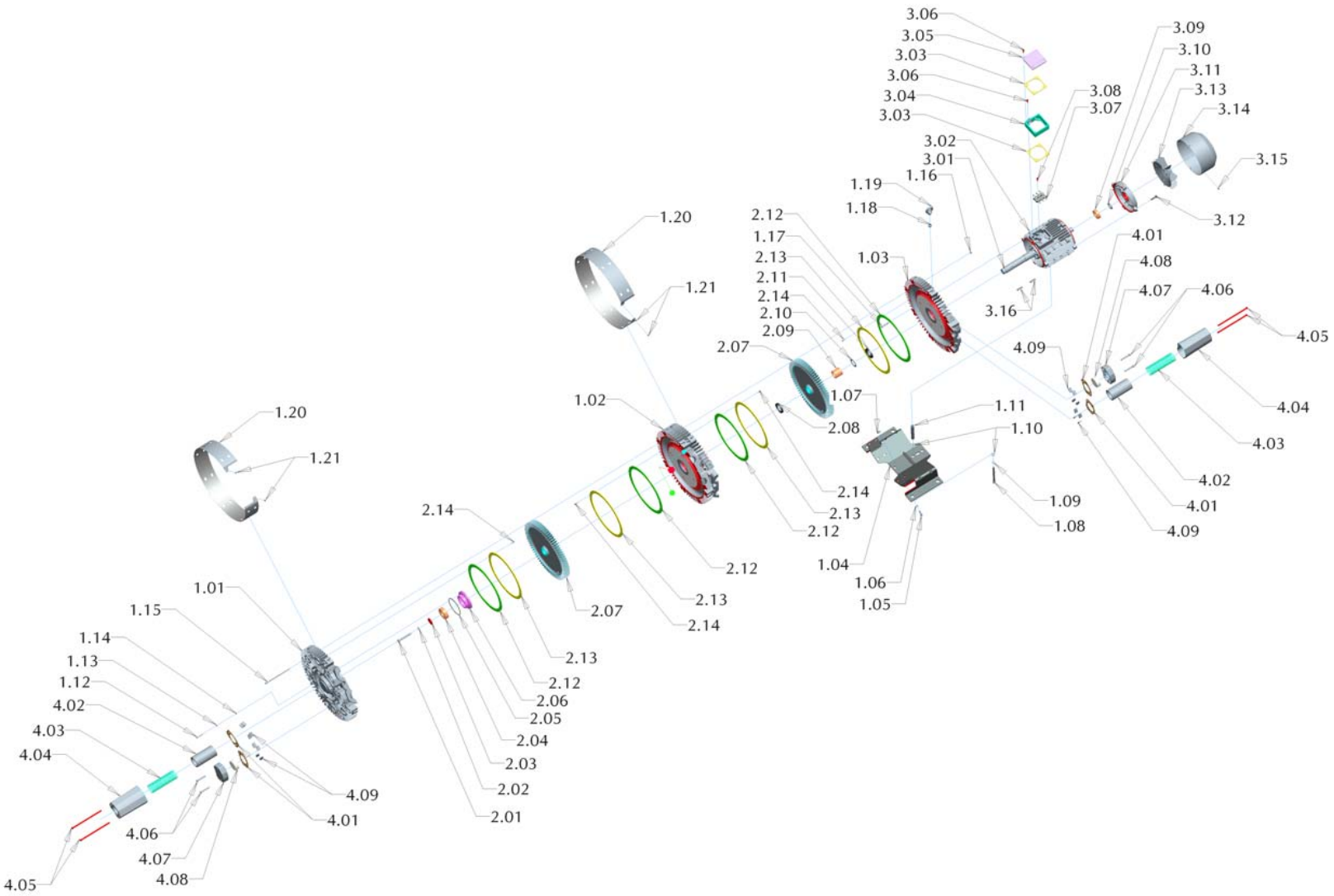

No.	Qty.	Description
1.01	1	Cover
1.02	1	Center Section
1.03	1	Housing
1.04	1	Mounting Plate
1.05	4	Plate Mounting Screw
1.06	4	Mouting Plate Washer
1.07	4	Mounting Plate Nut
1.08	1	Stator Support Screw
1.09	1	Stator Support Lock Washer
1.10	2	Stator Support Washer
1.11	1	Stator Support Sleeve
1.12	3	Bearing Cover Screw
1.13	3	Bearing Screw Washer
1.14	3	Bearing Ring Seal
1.15	8	Cover Mounting Screw
1.16	8	Cover Mounting Nut
1.17	4	Motor Mounting Screw
1.18	1	Lifting Ring Nut
1.19	1	Lifting Ring
1.20	2	Blower Cowl
1.21	4	Blower Cowl Screw
2.01	1	Shaft Screw
2.02	1	Shaft Lock Washer
2.03	1	Disc
2.04	1	Bearing
2.05	1	Bearing Cover O-Ring
2.06	1	Bearing Cover
2.07	2	Impeller
2.08	1	Rotary Shaft Seal
2.09	1	Sleeve
2.10	1	Disk
2.11	1	Shaft Seal Ring
2.12	4	Teflon Seal
2.13	4	Retaining Ring
2.14	32	Inner Seal Screw
3.01	1	Motor Rotor
3.02	1	Stator
3.03	2	Motor Terminal Box Gasket
3.04	1	Terminal Box
3.05	1	Cover For Terminal Box
3.06	8	Terminal Box Screw
3.07	1	Terminal Block
3.08	1	Terminal Block Screw
3.09	1	Rear Bearing
3.10	1	End Shield Disk
3.11	1	End Shield
3.12	4	End Shield Screw
3.13	1	External Fan
3.14	1	Fan Cowl
3.15	4	Fan Cowl Screw
3.16	2	Parallel Key
4.01	4	Silencer Gasket
4.02	2	Silencer Insert Filler
4.03	2	Silencer Insert
4.04	2	Silencer Casing
4.05	4	Silencer Screw
4.06	4	Flange Screw
4.07	2	Flange Cap
4.08	2	Flange Filler
4.09	16	Filler

Airtech, Inc. ("Company") Warranty Statement

Company warrants that on the date of shipment to Purchaser the goods will be of the kind and quality described herein, merchantable, and free of all defects in workmanship and materials.

If within one year from the date of initial operation, but not more than eighteen months from date of shipment by the Company, of any item of the goods, Purchaser discovers that such item was not as warranted above and promptly notifies Company in writing thereof, Company shall remedy such defect by, at the Company's option, adjustment, repair or replacement of the item and any affected part of the good. Purchaser shall assume all responsibility and expense for removal, reinstallation and freight in connection with the foregoing remedy. The same obligations and conditions shall extend to replacement items furnished by the Company hereunder. Company shall have the right of disposal of items replaced by it. Purchaser shall grant Company access to the goods at all reasonable times in order for Company to determine any defect in the goods. In the event that adjustment, repair or replacement does not remedy the defect, the Company and Purchaser shall negotiate in good faith an equitable adjustment in the contract price.

The Company's responsibility does not extend to any item of the goods which has not been manufactured and sold by the Company. Such item shall be covered only by the express warranty, if any, by the manufacturer thereof. The Company and its suppliers shall also have no responsibility if the goods have been improperly stored, handled or installed, or if the goods have not been operated or maintained according to their ratings or according to the instructions in Company or supplier furnished manuals, or if unauthorized repairs or modifications have been made to the goods.

THIS WARRANTY IS EXPRESSLY IN LIEU OF ALL OTHER WARRANTIES (EXCEPT TITLE) INCLUDING BUT NOT LIMITED TO IMPLIED WARRANTIES OF MERCHANTABILITY AND FITNESS, AND CONSTITUTES THE ONLY WARRANTY OF COMPANY WITH RESPECT TO THE GOODS.

The forgoing states Purchaser's exclusive remedy against Company and its suppliers for any defect in the good or for failure of the goods to be as warranted, whether Purchaser's remedy is based on contract, warranty, failure of such remedy to achieve its essential purpose, tort (including negligence), strict liability, indemnity, or any other legal theory, and whether arising out of warranties, representations, instructions, installations, or defects from any cause.

Neither Company nor its suppliers shall be liable, whether in contract, warranty, failure of a remedy to meet its essential purpose, tort (including negligence), strict liability, indemnity or any other legal theory, for loss of use, revenue or profit or for cost of capital or of substitute use or performance or for indirect, liquidated, incidental or consequential damages or for any other loss or cost of a similar type, or for claims by Purchaser for damages of Purchaser's customers.

For Further Information Please contact:

AIRTECH® VACUUM
150 South Van Brunt St.
Englewood, NJ 07631
Tel: 1-888-222-9940
Fax: 201-569-1696
airtech@airtechusa.com

AIRTECH® VACUUM SOUTH
2211 Newmarket Parkway
Marietta, GA 30067
Tel: 770-690-0700
Fax: 770-690-0709
airtechsouth@airtechusa.com

AIRTECH® VACUUM WEST
42 Digital Drive #9
Novato, CA 94949
Tel: 415-382-9000
Fax: 415-382-9700
airtechwest@airtechusa.com

www.airtechusa.com

Moisture Separator #AWS80-4

ESD Waste2Water, Inc.
Partnership for a Cleaner Tomorrow

Air / Water Separators

ESD Waste2Water, Inc. ESD custom fabricates Air / Water Separators for Soil Vapor Extraction and Dual Phase Extraction applications. Made of structurally sound, light-weight marine grade 5052 aluminum, our separators can withstand full vacuum applications and are completely corrosion resistant. Unlike carbon steel based separators, ESD Separators resist both internal chemical corrosion and the harshest external environmental conditions. The aesthetic qualities of ESD Separators are never compromised by oxidation. ESD Separators never experience corrosive pitting leaks, because our designs render expensive internal/external epoxy mastic coatings entirely unnecessary.

ESD Separators are available in many standard sizes and can be custom designed with a wide variety of options, including pump out systems, level gauging, additional particulate filtration, and baffling for high entrained

UL® Certified to UL-508A Standards

Thank you for allowing ESD to provide a solution to your equipment needs.

ESD Waste2Water, Inc.
495 Oak Road
Ocala, FL 34472
Tel: 800.277.3279 Fax: 352.680.9278
www.waste2water.com

STANDARD AWS SPECIFCATION

TYPE	WORKING VOLUME @(LSH)	AVAILABLE CONNECTION TYPE																CLEAN OUT PIPE	A	B	C (DIA.)	D	E	F	G	H	J
		FLANGE						MNPT					FNPT														
		2"	3"	4"	6"	8"	10"	2"	3"	4"	6"	8"	2"	3"	4"	6"	8"										
AWS30	12 GAL	X	X	X	-	-	-	X	X	X	-	-	X	X	X	-	-	6"	-	-	16 1/4"	25"	2"	19"	30"	33 1/2"	6"
AWS60	24 GAL	X	X	X	X	-	-	X	X	X	X	-	X	X	X	-	-	6"	24"	24"	23"	25"	2"	23"	30"	36 1/2"	6"
AWS80	47 GAL	X	X	X	X	-	-	X	X	X	X	-	X	X	X	-	-	8"	24"	24"	23"	39"	2"	39"	48"	54 3/4"	12"
AWS120	50 GAL	X	X	X	X	X	-	X	X	X	X	-	X	X	X	-	-	8"	24"	24"	23"	49"	2"	49"	60"	66 3/4"	12"
AWS220	107 GAL	-	X	X	X	X	X	X	X	X	X	-	X	X	X	-	-	8"	34"	34"	33 1/2"	49"	2"	49"	60"	66 3/4"	12"

RECOMMENED AIR FLOW (ACFM)						
	2"	3"	4"	6"	8"	10" *
ACFM	120	280	320	500	750	1000

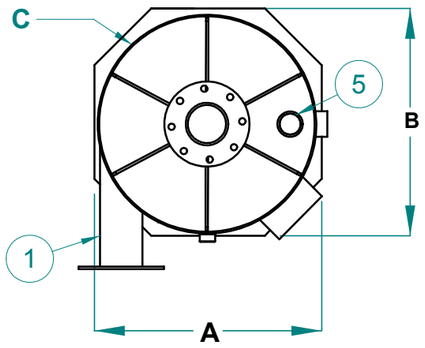

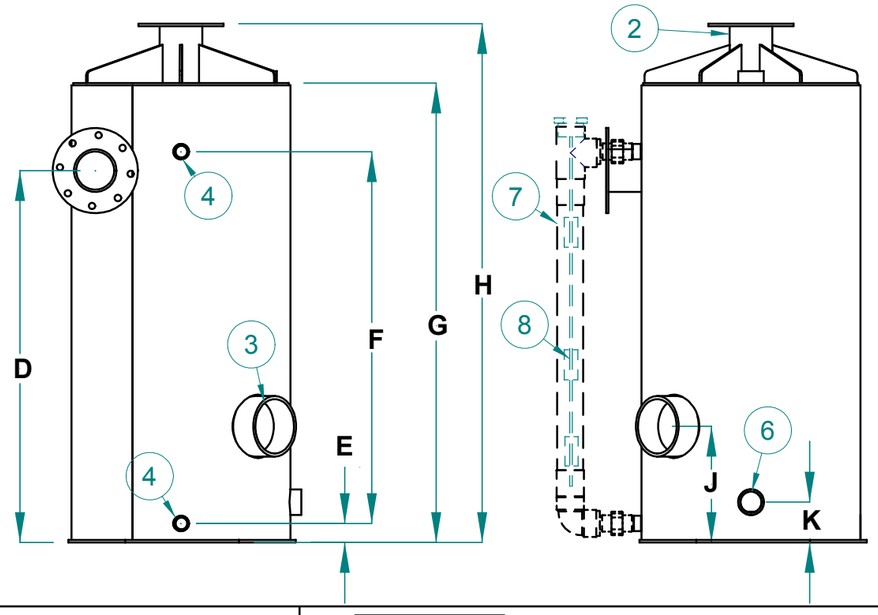

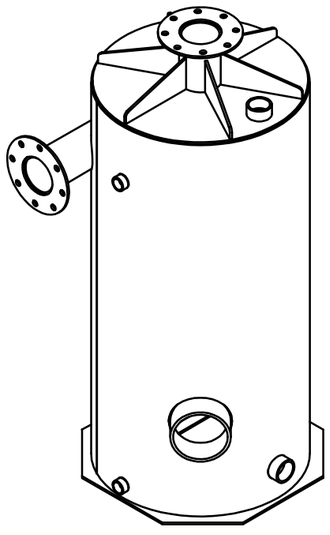

ITEM #	DESCRIPTION
1	INLET PIPE (SEE TABLE FOR AVAILABLE SIZE AND CONNECTION TYPE)
2	OUTLET PIPE (SEE TABLE FOR AVAILABLE SIZE AND CONNECTION TYPE)
3	CLEAN OUT
4	1" FNPT (MULTI LEVEL PROBE)
5	2" FNPT
6	2" FNPT
7	SIGHT TUBE 2" CLEAR PVC
8	MULTI LEVEL PROBE

NOTES:
1.MATERIAL : 1/8" & 3/16" ALUMINUM SHT 5052
2. PROBE (SIGHT TUBE) : 2" CLEAR PVC
3. CUSTOM SIZES AVAILABLE

ALL IDEAS,DESIGNS AND PLANS INDICATED OR REPRESENTED BY THIS DRAWING ARE OWNED BY AND THE PROPERTY OF ESD INC. AND WERE CREATED, EVOLVED AND DEVELOPED FOR USE ON AND IN CONJUCTION WITH THE SPECIFIED PROJECT. NONE OF THE IDEAS,DESIGNS OR PLANS SHALL BE USED OR DISCLOSED TO ANY PERSONS ,FIRM OR CORPORATION FOR ANY PURPOSE WHATSOEVER WITHOUT WRITTEN PERMISSION OF ESD WASTE2WATER, INC.

ESD Waste2Water, Inc.

495 Oak Road
Ocala, FL 34472
Phone (800) 277-3279
Fax (352) 680-0059

SCALE VERIFCATION

THIS BAR REPRESENTS ONE INCH ON ORIGNAL DRAWING

1"

USE TO VERIFY DRAWING

SIZE: B **SHEET #:** 1 OF 1

SCALE: NTS

UPDATED BY:

DRAWN BY: J.ANDREWS

APPROVED BY: N/A

COMPLETED: 06/15/10

UPDATED:

AWS SPECIFICATIONS
GENERAL LAYOUT

JOB NUMBER:

PRODUCT NUMBER: **AWS**

FILE NAME: "AWS SPEC.dft"

Filter Housings – Inline Particulate Filters

ESD Model #	Inlet Size / Type	Equivalent Solberg	ESD Net Price
IPF-300	3.0” MNPT	CSL-235P-300	$ 565.00
IPF-400	4.0” MNPT	CSL-235P-400	$ 590.00
IPF-600	6.0” MNPT	CSL-275P-600	$ 900.00
IPF-600F	6.0” Flanged	CSL-375P-600F	$ 1,100.00

Marine Grade aluminum construction

"L" STYLE INLET VACUUM AIR FILTERS
"CSL" Series 3" - 6" MPT

APPLICATIONS

Ash Handling	Bag House Systems	Blowers Fan
Blowers-PD Type	Cement	Chemical Processing
Envelope Manufacturing	Factory Automation	Food Processing-Vacuum
Glass, Ceramic-Vacuum	Intake Suction-Vacuum Pump	Medical
Pneumatic Conveying Systems	Remote Installations for Piston and Screw Compressors	Vacuum Furnaces
Vacuum Packaging	Vacuum Pump-Rotary Vane	Vacuum Pumps & Systems
Vacuum Pump-Screw Technology	Vacuum Pump-Side Channel	Vacuum Systems-Central
Waste Water Aeration	Woodworking	

FEATURES & SPECIFICATIONS

;99%+ removal efficiency std: Paper=2 micron, Polyester=5 micron	Filter change out differential: 10"-15" in. H_2O above initial delta P
Heavy duty T bolts for easy maintenance	Hydrostically tested 0.5 bar pressure for vacuum tightness
Inlet air enters canister above element	Inlet/Outlet 1/4" gauge taps standard
Large dirt holding capacity and easy field cleaning	Low pressure drop
Positive sealing O-ring seal system	Powder coat paint finish
Rugged all steel construction with baked enamel finish	Temp (continuous): min -15° F (-26° C) max 220° F (104° C)
Vacuum level: Typically $1x10^{-3}$ mmHg ($1.3x10^{-3}$ mbar)	

OPTIONS

Activated carbon prefilter to reduce odor	Available in *Stainless Steel*	Epoxy coated housings
Larger sizes available	Special connections, BSPT/Metric	Support brackets
Various elements available		

Line Drawing

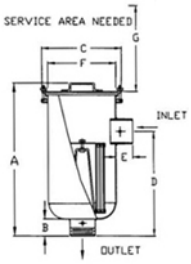

***All measurements are shown in standards.**

Typical Lead Times:	
Normally in stock	
1 - 2 weeks	5 - 7 weeks
3 - 4 weeks	8 + weeks

Add To Order	Model Number	Element Type	Inlet in. NPT or FLG	Outlet in. NPT or FLG	Connection Style	Dim A in.	Dim B in.	Dim C in.	Dim D in.	Dim E in.	Dim F in.	Dim G in.	Parent Flow SCFM	Element Parent Flow SCFM	Approx. Weight lbs.	CAD
<>	CSL-235P-400	Polyester	4	4	Call	27.12	3	14	18.5	3	12	10	520	570	52	CAD

Solberg Mfg.
1151 W. Ardmore Ave.·Itasca, IL 60143·(630)773-1363· Fax: (630)773-0727

REVISIONS						
ZONE	REV	DESCRIPTION	ECN #	CHG BY	DATE	APP'D

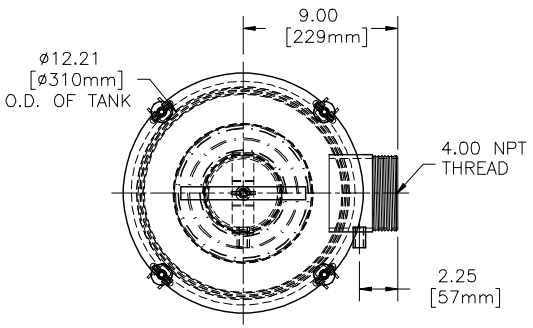

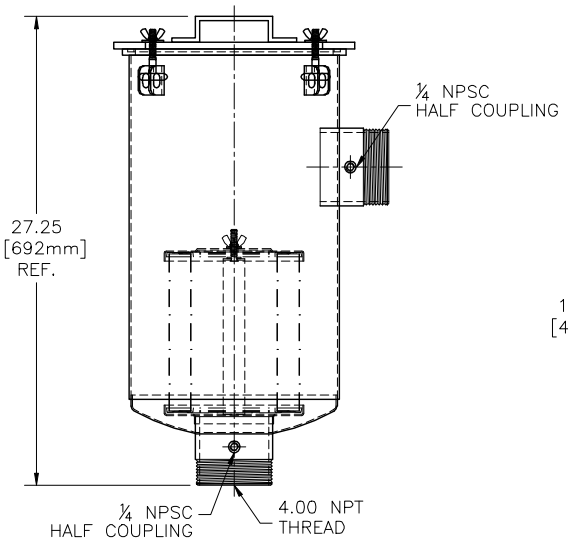

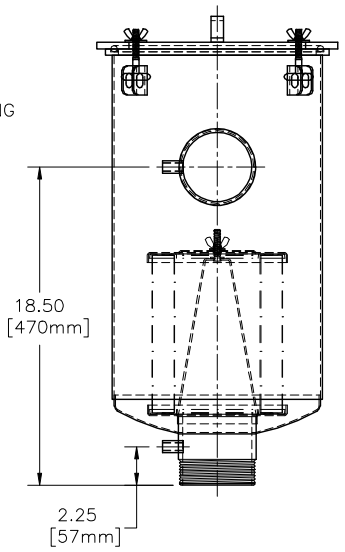

REPLACEMENT ELEMENT# 235P	
MATERIAL	POLYESTER
CFM FLOW	570
SURFACE AREA	8.3 SQ. FT.
I.D.	4.75
O.D.	7.88
HEIGHT	9.63

MODEL#	HOUSING MATERIAL	FINISH
CSL-235P-400	CARBON STEEL	BAKED ENAMEL GREY

The information contained herein is confidential and the property of Solberg Manufacturing Inc. and it is furnished to you with the expressed understanding that it will not be reproduced, copied in any manner, loaned or otherwise transferred to others entirely or in part, nor used for any purpose other than for which it was furnished. It will be returned upon request to Solberg Manufacturing Inc. The above restriction is in addition to, and does not in any way alter, any other restrictions which may apply to the information contained herein. The Illinois Circuit Court, Cook County Division has exclusive jurisdiction over any prosecution that may be necessary to uphold these restrictions.

UNLESS OTHERWISE SPECIFIED:
-DIMENSIONS ARE IN INCHES
-REF: APPROXIMATE DIMENSIONS, NO TOLERANCES APPLY
-TOLERANCES ARE:
DECIMALS: .XX ±.25, .XXX ±.125
ANGLES ±2°

CUSTOMER APPROVAL:

SALES REP.: M.CARROLL

APPROVALS	DATE
DRAWN: CRW	09/07/05
APPROVED: M.C.	09/07/05

SOLBERG MANUFACTURING INC.
1151 W. ARDMORE AVE.
ITASCA, IL 60143
630/773-1363

DESCRIPTION:
CSL-235P-400

SHEET: 1 of 1 | SHEET SIZE: C | SCALE: 1:5.5

DRAWING NUMBER: SD12012 | REV: —

Absorptive Silencers

Air Intake and Discharge

"SLCR" Series 1/2" - 4" MPT, FPT

APPLICATIONS & EQUIPMENT

- Small Air Compressors
- Centrifugal Blowers
- Regenerative Blowers
- Vacuum Pumps & Systems
- Vacuum Packaging Equipment
- Vacuum Lifters
- Small Low Pressure Vents
- Blowers - Side Channel

FEATURES & SPECIFICATIONS

- Layered sound absorbent media
- **Minimal** pressure drop because it does not rely on internal baffles, tubes or other restrictive devices
- Reduces high frequency noise up to 30 decibels (Due to the wide range of applications and machines these units are used on, please inquire for your specific application.)
- **Inlet or Discharge** silencing applications with maximum temperature of 212°F (100°C)
- Durable inline carbon steel construction with baked enamel finish
- For inline air service

OPTIONS (Inquiries Encouraged)

- Flange Adapters
- Larger sizes available

CONFIGURATION

DRAWING

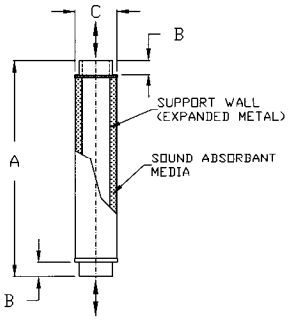

Dimension tolerance ± 1/4"

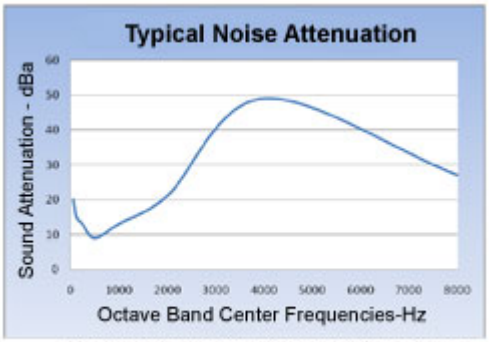

Note: Noise attenuation may vary due to the wide range of applications and equipment.

Model No.	Inlet & Outlet	Connection Style	DIMENSIONS - inches A	B	C	Rated Flow SCFM	Approx. Wt. Lbs
SLCR100	1"	FPT	12	11/16	2 1/2	42	2
SLCR125	1 1/4"	FPT	12	11/16	2 1/2	55	2
SLCR150	1 1/2"	FPT	12	11/16	3 1/8	155	3
SLCR200	2"	FPT	15 3/4	11/16	3 5/8	270	4
SLCR250	2 1/2"	FPT	21	1 1/2	4 5/8	385	8
SLCR300	3"	FPT	26	1 9/16	5 1/8	575	10
SLCR400	4"	FPT	23 7/8	1 11/16	10	575	26
SLCRT050	1/2"	MPT	14 1/2	2	2 1/2	25	2
SLCRT075	3/4"	MPT	14 1/2	2	2 1/2	35	2
SLCRT100	1"	MPT	14 1/2	2	2 1/2	42	2
SLCRT125	1 1/4"	MPT	14 1/2	2	2 1/2	55	2
SLCRT150	1 1/2"	MPT	14	1 3/4	3 1/8	155	3
SLCRT200	2"	MPT	18 1/2	2 1/8	3 5/8	270	4
SLCRT250	2 1/2"	MPT	23 11/16	2 5/8	4 5/8	385	8
SLCRT300	3"	MPT	28	2 5/8	5 1/8	575	10
SLCRT400	4"	MPT	29 5/16	4	10	575	26

Note: Model offerings and design parameters may change without notice.

1151 Ardmore Ave. ♦ Itasca, IL 60143 USA
Sales/Service: 630.773.1363 ♦ Fax: 630.773.0727
E-mail: sales@solbergmfg.com ♦ Web Site: www.solbergmfg.com

REVISIONS						
ZONE	REV	DESCRIPTION	ECN #	CHG BY	DATE	APP'D

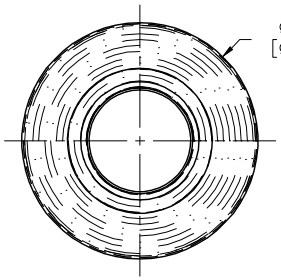

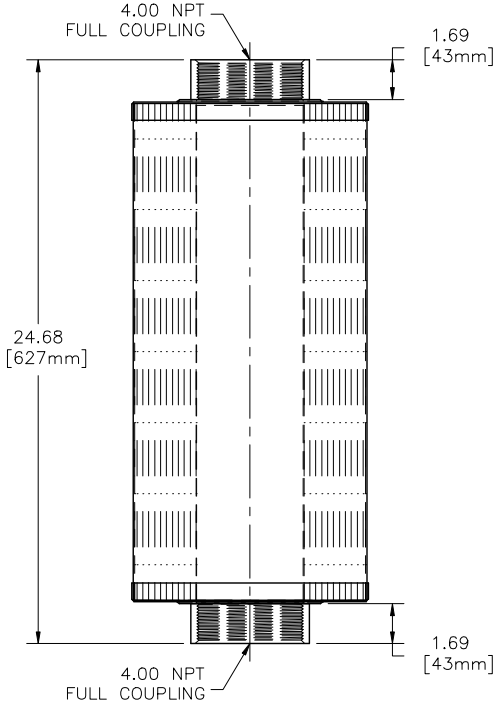

NOTES & SPECIFICATIONS

1. SLCR400 WEIGHT = APPROX. 40 LBS.

MODEL#	HOUSING MATERIAL	FINISH
SLCR400	CARBON STEEL	BAKED ENAMEL GREY

The information contained herein is confidential and the property of Solberg Manufacturing Inc. and it is furnished to you with the expressed understanding that it will not be reproduced, copied in any manner, loaned or otherwise transferred to others entirely or in part, nor used for any purpose other than for which it was furnished. It will be returned upon request to Solberg Manufacturing Inc. The above restriction is in addition to, and does not in any way alter, any other restrictions which may apply to the information contained herein. The Illinois Circuit Court, Cook County Division has exclusive jurisdiction over any prosecution that may be necessary to uphold these restrictions.

UNLESS OTHERWISE SPECIFIED:
–DIMENSIONS ARE IN INCHES
–REF: APPROXIMATE DIMENSIONS, NO TOLERANCES APPLY
–TOLERANCES ARE:
DECIMALS: .XX ±.25, .XXX ±.125
ANGLES ±2°

CUSTOMER APPROVAL:

SOLBERG MANUFACTURING INC.
1151 W. ARDMORE AVE.
ITASCA, IL 60143
630/773-1363

DESCRIPTION: SLCR400

SALES REP.: H.DALL

APPROVALS	DATE
DRAWN: CRW	06/28/05
APPROVED: P.G.	06/29/05

SHEET: 1 of 1 | SHEET SIZE: C | SCALE: 1:4

DRAWING NUMBER: SD11920 | REV: —

Compact Filter Silencers
FS Series 1/2” - 6” MPT, Flange

Features

- Fully drawn weatherhood - no welds to rust or vibrate apart
- Tubular silencing design - tubes are positioned to maximize attenuation and air flow while minimizing pressure drop
- Durable carbon steel construction with baked enamel finish & powder coated weatherhood

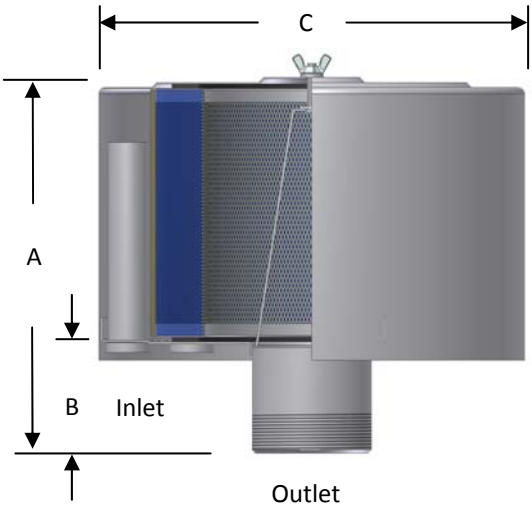

Technical Specifications

- Temp (continuous): min -15°F (-26°C) max 220°F (104°C)
- Filter change out differential: 15-20” H2O over initial Δ P
- Pressure drop graphs available upon request
- Polyester: 99%+ removal efficiency standard to 5 micron
- Paper: 99%+ removal efficiency standard to 2 micron

Options

- 1/8” tap holes available for 3” and larger connections
- Pressure drop indicator (See page 3-11)
- Various media for different environments
- Stainless steel construction
- Epoxy coated finish
- Special connections
- Side Access Silencer Filters (LQB Series) for space restricted enclosures (select models)

Tidbit: Charlie Solberg Sr. “Senior” designed our first filter silencer in 1966. The FS-15 size filter was created for small air compressors.

www.solbergmfg.com • sales@solbergmfg.com • Sales: 630.773.1363 • Fax: 630.773.0727

Outlet Connections

MPT Outlet	Assembly SCFM Rating	Assembly Part Number Polyester	Assembly Part Number Paper	Dimensions - inches A	B	C	No. of Silencing Tubes	Approx. Wt. lbs	Replacement Element Part No. Polyester	Replacement Element Part No. Paper	Element SCFM Rating
1/2"	10	FS-15-050	FS-14-050	4	1 1/2	6	1	2	15	14	35
3/4"	25	FS-15-075	FS-14-075	4	1 1/2	6	2	2	15	14	35
1"	35	FS-15-100	FS-14-100	4	1 1/2	6	3	2	15	14	35
1"	55	FS-19P-100	FS-18P-100	6 5/8	1 5/8	6	3	3	19P	18P	100
1 1/4"	70	FS-19P-125	FS-18P-125	6 5/8	1 5/8	6	5	3	19P	18P	100
1 1/2"	85	FS-19P-150	FS-18P-150	6 5/8	1 5/8	6	5	4	19P	18P	100
2"	135	FS-31P-200	FS-30P-200	7 1/4	2 1/4	10	5	8	31P	30P	195
2"	135	FS-231P-200	FS-230P-200	12 1/4	2 1/4	10	5	14	231P	230P	300
2 1/2"	195	FS-31P-250	FS-30P-250	7 1/2	2 1/2	10	5	8	31P	31P	195
2 1/2"	195	FS-231P-250	FS-230P-250	12 1/2	2 1/2	10	9	15	231P	230P	300
3"	300	FS-231P-300	FS-230P-300	13	3	10	9	15	231P	230P	300
3"	300	FS-235P-300	FS-234P-300	13	3	16	9	29	235P	234P	570
3"	300	FS-275P-300	FS-274P-300	13	3	16	9	33	275P	274P	1100
4"	520	FS-235P-400	FS-234P-400	14	4	16	9	30	235P	234P	570
4"	520	FS-275P-400	FS-274P-400	14	4	16	9	34	275P	274P	1100
5"	800	FS-245P-500	FS-244P-500	14	4	16	14	33	245P	244P	880
5"	800	FS-275P-500	FS-274P-500	14	4	16	14	36	275P	274P	1100
6"	1100	FS-275P-600	FS-274P-600	15	5	16	18	38	275P	274P	1100

See Filter Silencer Technical Data section for sizing guidelines.

Dimension tolerance ± 1/4”

Flange Outlet Connections

Flange Outlet	Assembly SCFM Rating	Assembly Part Number Polyester	Assembly Part Number Paper	Dimensions - inches A	B	C	No. of Silencing Tubes	Approx. Wt. lbs	Replacement Element Part No. Polyester	Replacement Element Part No. Paper	Element SCFM Rating
4"	520	FS-235P-400F	FS-234P-400F	14	4	16	9	33	235P	234P	570
4"	520	FS-275P-400F	FS-274P-400F	14	4	16	9	39	275P	274P	1100
5"	800	FS-245P-500F	FS-244P-500F	14	4	16	14	38	245P	244P	880
5"	800	FS-275P-500F	FS-274P-500F	14	4	16	14	41	275P	274P	1100
6"	1100	FS-275P-600F	FS-274P-600F	15	5	16	18	42	275P	274P	1100

See Filter Silencer Technical Data section for sizing guidelines.

Dimension tolerance ± 1/4”

125/150# Pattern Flg	Dimensions - inches O.D.	B.C.	B.H.	No. of Holes	Flange Thickness
4"	9	7 1/2	0.75	8	0.38
5"	10	8 1/2	0.88	8	0.38
6"	11	9 1/2	0.88	8	0.38

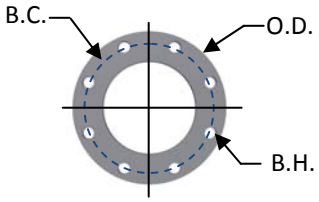

O.D.: Outside Dimension
B.C.: Bolt Circle
B.H.: Bolt Hole

Note: Model offerings and design parameters may change without notice. See www.solbergmfg.com for most current offering.

REVISIONS						
ZONE	REV	DESCRIPTION	ECN #	CHG BY	DATE	APP'D

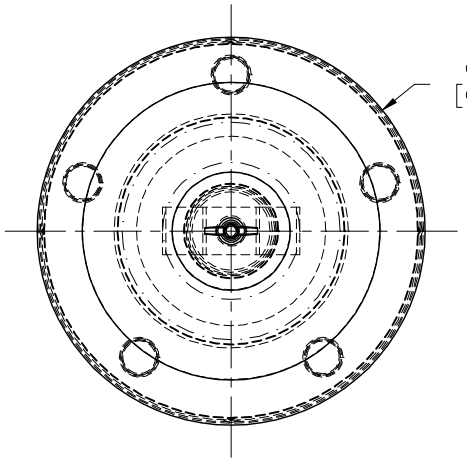

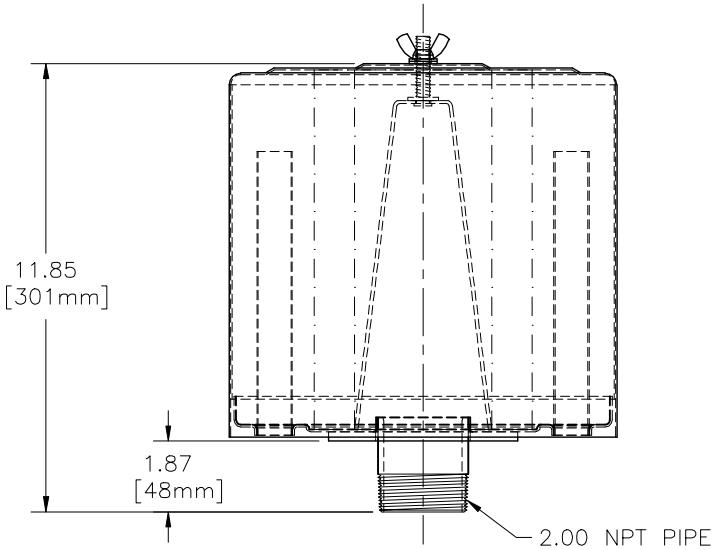

REPLACEMENT ELEMENT# 231P	
MATERIAL	POLYESTER
CFM FLOW	300
SURFACE AREA	4.5 SQ. FT.
I.D.	3.63
O.D.	5.75
HEIGHT	9.50

MODEL#	HOUSING MATERIAL	FINISH
FS-231P-200	STAINLESS STEEL	NONE

The information contained herein is confidential and the property of Solberg Manufacturing Inc. and it is furnished to you with the expressed understanding that it will not be reproduced, copied in any manner, loaned or otherwise transferred to others entirely or in part, nor used for any purpose other than for which it was furnished. It will be returned upon request to Solberg Manufacturing Inc. The above restriction is in addition to, and does not in any way alter, any other restrictions which may apply to the information contained herein. The Illinois Circuit Court, Cook County Division has exclusive jurisdiction over any prosecution that may be necessary to uphold these restrictions.

UNLESS OTHERWISE SPECIFIED:
- DIMENSIONS ARE IN INCHES
- REF: APPROXIMATE DIMENSIONS, NO TOLERANCES APPLY
- TOLERANCES ARE:

DECIMALS: .XX ±.25, .XXX ±.125
ANGLES ±2°

CUSTOMER APPROVAL:

SOLBERG MANUFACTURING INC.
1151 W. ARDMORE AVE.
ITASCA, IL 60143
630/773-1363

DESCRIPTION:
FS-231P-200

SALES REP.: A. SPICER

APPROVALS	DATE
DRAWN: CRW	04/24/03
APPROVED: C.W.	04/24/03

SHEET: 1 of 1 | SHEET SIZE: C | SCALE: 1:2

DRAWING NUMBER: SD10995 | REV: —

Transfer Pump P-1 #1MS1C5E4

ITT

Commercial Water

Goulds Pumps

G&L MCS SERIES

End Suction Centrifugal Pumps

Bombas Centrífugas de Succión Final Serie MCS

GOULDS PUMPS

Goulds Pumps is a brand of ITT Corporation.

Goulds Pumps es una marca de fábrica de ITT Corporation.

www.goulds.com

Engineered for life

A Full Range of Product Features
Un producto con una amplia gama de características

Superior Materials of Construction: AISI 304 and 316L stainless steel liquid handling components for corrosion resistance, quality appearance, and improved strength and ductility.

High Efficiency Impeller: Enclosed impeller with unique floating seal ring design maintains maximum efficiencies over the life of the pump without adjustment.

Casing: Stainless steel construction with NPT threaded, centerline connections, easily accessible vent, prime and drain connections with stainless steel plugs.

Mechanical Seal: Standard John Crane seal with carbon ceramic faces, BUNA elastomers, and stainless metal parts. Optional high temperature and chemical duty seals available.

Motors: NEMA standard open drip- proof, totally enclosed fan cooled enclosures. Rugged ball bearing design for continuous duty under all operating conditions.

Materiales superiores de construcción: *Los componentes para el manejo de líquidos son de acero inoxidable AISI 304 y 316L, lo que brinda resistencia a la corrosión, calidad y mayor forta leza y ductilidad.*

Impulsor de eficiencia superior: *El impulsor encerrado con un diseño único de anillo de sello flotante, mantiene a máxima eficiencia durante toda la vida útil de la bomba sin necesidad de ajustes.*

Carcasa: *Construcción de acero inoxidable con rosca NPT, conexiones centrales y conexiones de ventilación, cebado y drenaje de fácil acceso y tapones de acero inoxidable.*

Sello mecánico: *John Crane estándar con superficies de sellado de carbono/cerámica, elastómeros BUNA y componentes de metal inoxidable. También se encuentran disponibles sellos opcionales para altas temperaturas y manejo de productos químicos.*

Motores: *Estándar NEMA abiertos resguardados o totalmente encerrados con recinto enfriado por ventilador. Cojinete de bolas de sólido diseño para trabajo continuo bajo cualquier condición de operación.*

MCS Product Line Numbering System
Sistema de numeración de la línea de productos MCS

Example Product Code,
Ejemplo código del producto

1 MS 1 C 5 E 4

Mechanical Seal and O-ring
0 = Pre-engineered standard
For optional mechanical seal modify catalog order no. with seal code listed below.

Sello mecánico y anillo 'O'
0 = Estándar aprobado
Para sello mecánico opcional modificar el número de orden del catálogo con el código del sello según la siguiente tabla.

John Crane Mechanical Seal (⅝" seal), *Sello Mecánico John Crane (sello de ⅝")*						
Seal Code, *Código del Sello*	**Rotary, *Rotativo***	**Stationary, *Estacionario***	**Elastomers, *Elastómeros***	**Metal Parts, *Partes Metálicas***	**Part No., *Pieza Número***	**Casing O-Ring, *Carcasa Anillo 'O'***
0	Carbon, *Carbono*	Ceramic, *Cerámica*	BUNA	18-8SS	10K10	BUNA
2		Sil-Carbide, *Carburo de silicona*	EPR	316 SS	10K18	EPR
4			Viton		10K55*	Viton
5	Sil-Carbide, *Carburo de silicona*		EPR		10K81	EPR
6			Viton		10K62	Viton

* Replaces obsoleted 10K24.

Impeller Option Code . . . No Adder Required
For optional impeller diameters modify catalog order no. with impeller code listed below. Select optional impeller diameter from pump performance curve.

Código del Impulsor Opcional . . . No se requiere adición
Para impulsores con diámetros opcionales modificar el número de orden del catálogo con el código del impulsor indicado a continuación. Escoger el impulsor con diámetro opcional de la curva de funcionamiento de la bomba.

Impeller Code, *Código del Impulsor*	Pump Size, *Tamaño de la Bomba*		
	1 x 1¼ – 6	**1¼ x 1½ – 6**	**1½ x 2 – 6**
	Diameter	**Diameter**	**Diameter**
K	–	6⅛	–
G	–	5 15/16	5⅜
H	–	5½	5
A	6⅛	5¼	4¾
B	5¾	5 1/16	4⅝
C	5 3/16	4⅞	4⅜
D	4¾	4⅝	4 1/16
E	4 7/16	4¼	3⅝
F	4 1/16	3⅞	–

Driver, *Motor*
1 = 1 PH, ODP 4 = 1 PH, TEFC
2 = 3 PH, ODP 5 = 3 PH, TEFC

HP Rating, *Capacidad en HP*
C = ½ HP E = 1 HP G = 2 HP J = 5 HP
D = ¾ HP F = 1½ HP H = 3 HP

Driver: Hertz/Pole/RPM, *Motor: Hercios/Polo/RPM*
1 = 60 Hz, 2 pole, 3500 RPM
4 = 50 Hz, 2 pole, 2900 RPM

Material
MS = Stainless steel, *Acero inoxidable*

Pump Size, *Tamaño de la bomba*
1 = 1 x 1¼ – 6 2 = 1¼ x 1½ – 6 3 = 1½ x 2 – 6

The various versions of the MCS are identified by a product code number on the pump label. This number is also the catalog number for the pump. The meaning of each digit in the product code number is shown at right.

Las diferentes versiones de la MCS se identifican con un número de código de producto en la etiqueta de la bomba. Este número es también el número de catálogo de la bomba. El significado de cada dígito en el código del producto se muestra a la derecha.

Performance Coverage (60 Hz)
Rango de operación (60 Hz)

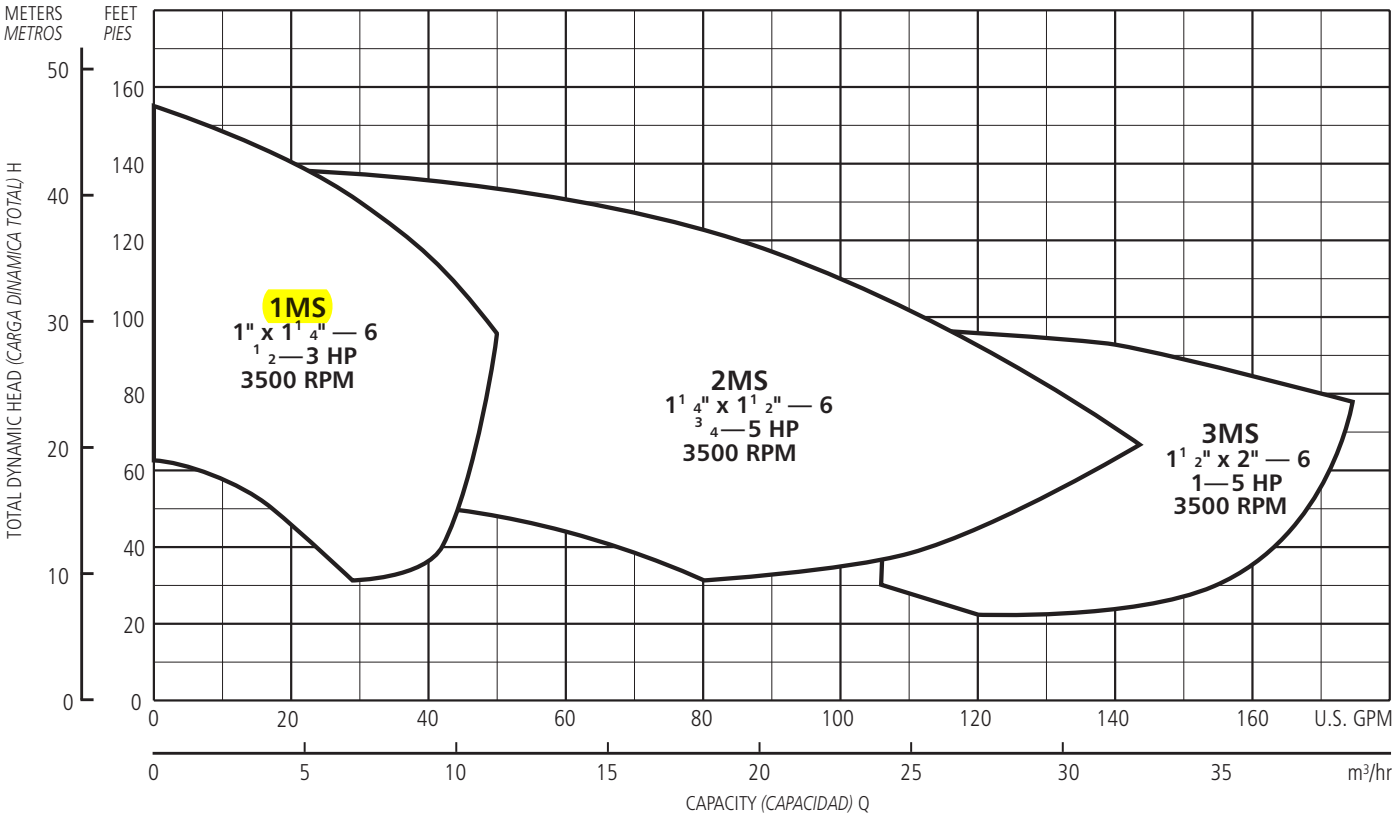

NOTES:
Not recommended for operation beyond printed H-Q curve.

For critical application conditions consult factory.

Not all combinations of motor, impeller and seal options are available for every pump model. Please check with G&L Pumps on non-cataloged numbers.

All standard 3500 RPM ODP and TEFC motors supplied by Goulds Pumps, have minimum of 1.15 service factor. Standard catalog units may utilize available service factor. Any motors supplied other than Goulds Pumps check available service factor.

NOTAS:
No se recomienda para funcionamiento superior al indicado en la curva H-Q.

Para condiciones de aplicaciones críticas consultar con la fábrica.

No todas las combinaciones de motor, impulsor y sellos se encuentran disponibles para todos los modelos de bomba. Por favor consultar con G&L Pumps sobre los números no catalogados.

Todos los motores estándar de 3500 RPM, ODP (abiertos resguardados) y TEFC (totalmente encerrados con enfriamiento forzado) provistos por Goulds Pumps tienen un factor mínimo de servicio de 1,15. Las unidades estándar de catálogo pueden utilizar el factor de servicio disponible. Verificar el factor de servicio disponible de todo motor no provisto por Goulds Pumps.

MCS Close Coupled Pump Major Components: Materials of Construction
Materiales de construcción de los principales componentes de la bomba MCS de acoplamiento cerrado

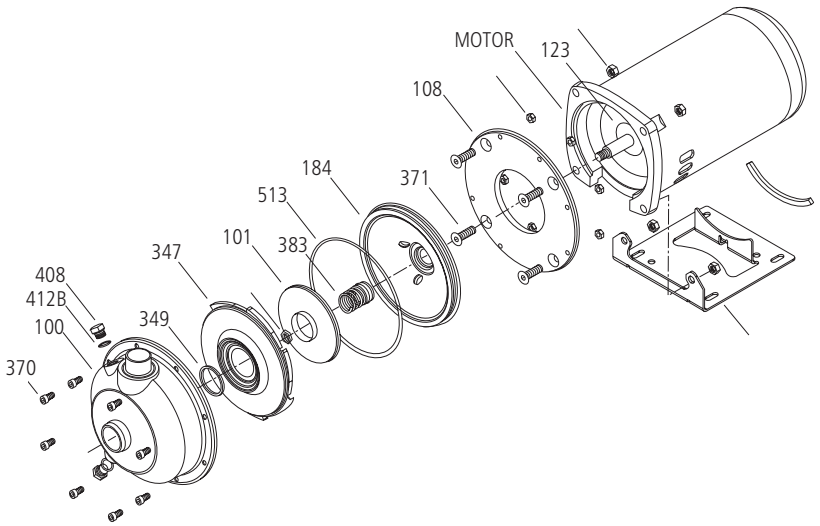

Item No., *Parte No.*	Description, *Descripción*	Materials, *Materiales*
100	Casing, *Carcasa*	AISI 316L SS, *AISI 316L Acero inoxidable*
101	Impeller, *Impulsor*	
108	Motor adapter, *Adaptador del motor*	Aluminum, *Aluminio*
123	Deflector, *Deflector*	BUNA-N
184	Seal housing, *Alojamiento del sello*	AISI 316L SS, *AISI 316L Acero inoxidable*
347	Guidevane, *Difusor*	
349	Seal ring, guidevane; *Anillo del sello, difusor*	BUNA-N
370	Socket head screws, casing; *Encajes de tornillos, carcasa*	AISI 410 SS, *AISI 410 Acero inoxidable*
371	Bolts, motor; *Bulones, motor*	Steel, *Acero*
383	Mechanical seal, *Sello mecánico*	see chart, *ver tabla*
408	Drain and vent plug, casing; *Tapones de drenaje y ventilación, carcasa*	AISI 316L SS, *AISI 316L Acero inoxidable*
412B	O-ring, drain and vent plug; *Anillo 'O', tapón de drenaje y ventilación*	Viton
513	O-ring, casing; *Anillo 'O', carcasa*	
Motor *Motor*	NEMA standard, 56Y flange; *NEMA estándar, brida 56Y*	

MCS Close Coupled – Dimensions, Weights and Specifications
MCS Acople Cerrado – Dimensiones, pesos y especificaciones

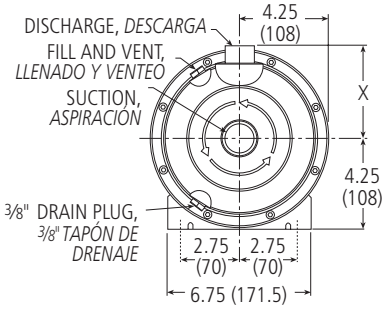

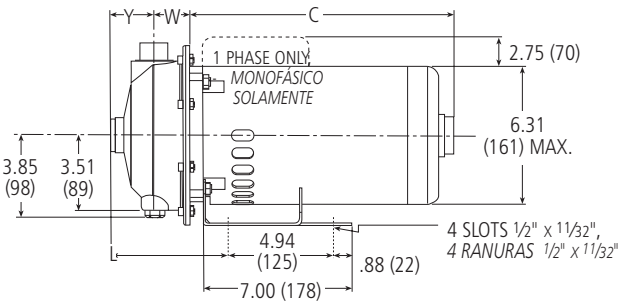

Clockwise rotation viewed from drive end. *Rotación en dirección de las agujas del reloj visto desde el extremo del motor.*

NOTES:

1. Pumps will be shipped with top vertical discharge as standard. For other orientations, remove casing screws, rotate to desired position, and tighten 6mm screws to 5 – 6 lbs./ft.(6.8-8 N•m).
2. Dimensions in inches and millimeters (mm). Weight in pounds and kilograms (kg).
3. Motor dimensions may vary with motor manufacturer.
4. Not to be used for construction purposes unless certified.

NOTAS:

1. *Las bombas se entregan con la descarga vertical superior estándar; para una orientación diferente, retirar los tornillos de la carcasa, hacer girar hasta la posición deseada y ajustar los bulones de 6 mm a 5-6 libras/pie (6,8-8 N-m).*
2. *Dimensiones en pulgadas y milímetros (mm), peso en libras y kilogramos (kg).*
3. *Las dimensiones del motor pueden variar de acuerdo al fabricante.*
4. *No utilizar para fines de construcción a menos que estén certificadas.*

Dimensions and Weights – Determined by Pump, *Dimensiones y peso – Determinados por la bomba*

Pump, *Bomba*	Suct., *Aspiración*	Disch., *Descarga*	HP	W	X	Y	L	Wt. Less Motor, *Peso sin motor*
1 MS	1.25 (32)	1.00 (25)	½-3	1.65 (42)	4.38 (111)	2.00 (51)	5.38 (137)	6 (2.7)
2 MS	1.50 (38)	1.25 (32)	¾-5	2.09 (53)	4.50 (114)	2.12 (54)	5.94 (151)	7 (3.2)
3 MS	2.00 (51)	1.50 (38)	1-5	2.09 (53)	4.62 (117)	2.12 (54)	5.12 (130)	7 (3.2)

Dimensions and Weights – Determined by Motor, *Dimensiones y peso – Determinados por el motor*

HP	Motor Length and Weights, *Longitud y peso del motor*							
	1 Phase, *Monofásicos*				3 Phase, *Trifásicos*			
	ODP		TEFC		ODP		TEFC	
	C	Weight, *Peso*	C	Weight, *Peso*	C	Weight, *Peso*	C	Weight, *Peso*
½	10.88 (276)	24 (10.9)	11.56 (294)	30 (13.6)	10.38 (264)	24 (10.9)	10.31 (262)	19 (8.6)
¾	10.88 (276)	26 (11.8)	12.38 (315)	33 (14.9)	10.62 (270)	25 (11.3)	11.06 (281)	21 (9.5)
1	11.62 (295)	27 (12.2)	12.31 (313)	37 (16.8)	11.12 (282)	26 (11.8)	11.06 (281)	23 (10.4)
1½	13.62 (346)	28 (12.7)	13.56 (344)	40 (18.1)	11.62 (295)	28 (12.7)	11.38 (289)	29 (13.1)
2	12.62 (321)	30 (13.6)	13.56 (344)	42 (19)	11.62 (295)	31 (14)	12.81 (327)	36 (16.3)
3	12.44 (316)	36 (16.3)	14.31 (363)	48 (21.7)	12.38 (315)	34 (15.4)	15.06 (383)	40 (18.1)
5	14.03 (356)	48 (21.7)	—	—	14.03 (356)	46 (20.8)	—	—

Performance Curves – 60 Hz, 3500 RPM
Curvas de desempeño – 60 Hz, 3500 RPM

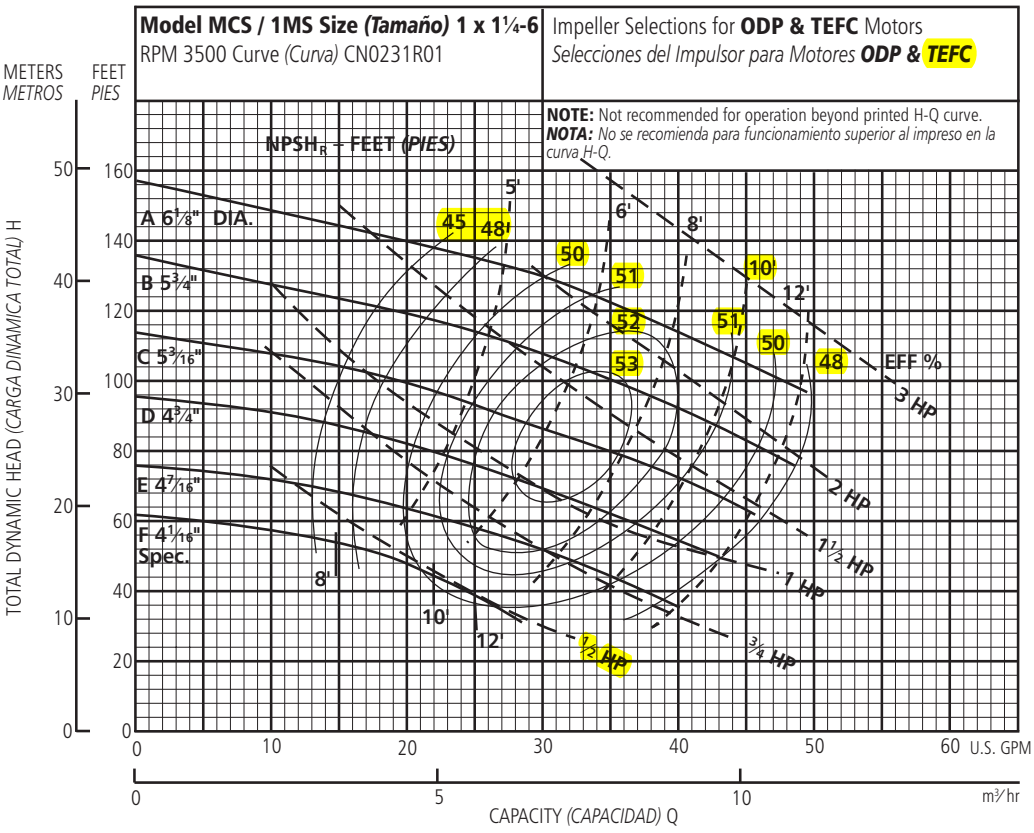

Ordering Code, *Código de Pedido*	Standard HP Rating, *Capacidad HP estándar*	Imp. Dia.
F	½	4¹⁄₁₆" spec.
E	½	4⁷⁄₁₆
D	¾	4¾
C	1	5³⁄₁₆
B	1½	5¾
A	2	6⅛

NOTE: Although not recommended, the pump may pass a ¹⁄₁₆" sphere.

NOTA: *Si bien no se recomienda, la bomba puede pasar una esfera de ¹⁄₁₆".*

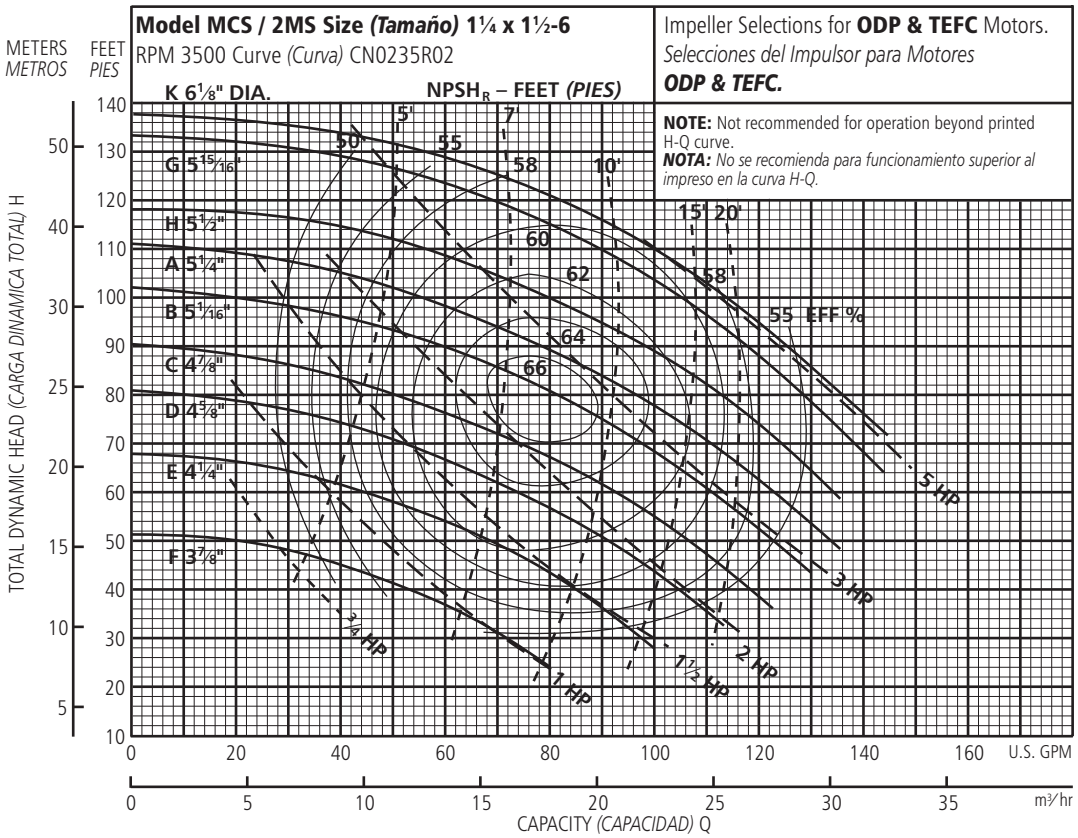

Ordering Code, *Código de Pedido*	Standard HP Rating, *Capacidad HP estándar*	Imp. Dia.
F	¾	3⅞"
E	1	4¼
D	1½	4⅝
C	2	4⅞
B	3	5¹⁄₁₆
A	3	5¼
H	5	5½
G	5	5¹⁵⁄₁₆
K	5	6⅛

NOTE: Although not recommended, the pump may pass a ³⁄₁₆" sphere.

NOTA: *Si bien no se recomienda, la bomba puede pasar una esfera de ³⁄₁₆".*

Performance Curves – 60 Hz, 3500 RPM
Curvas de desempeño – 60 Hz, 3500 RPM

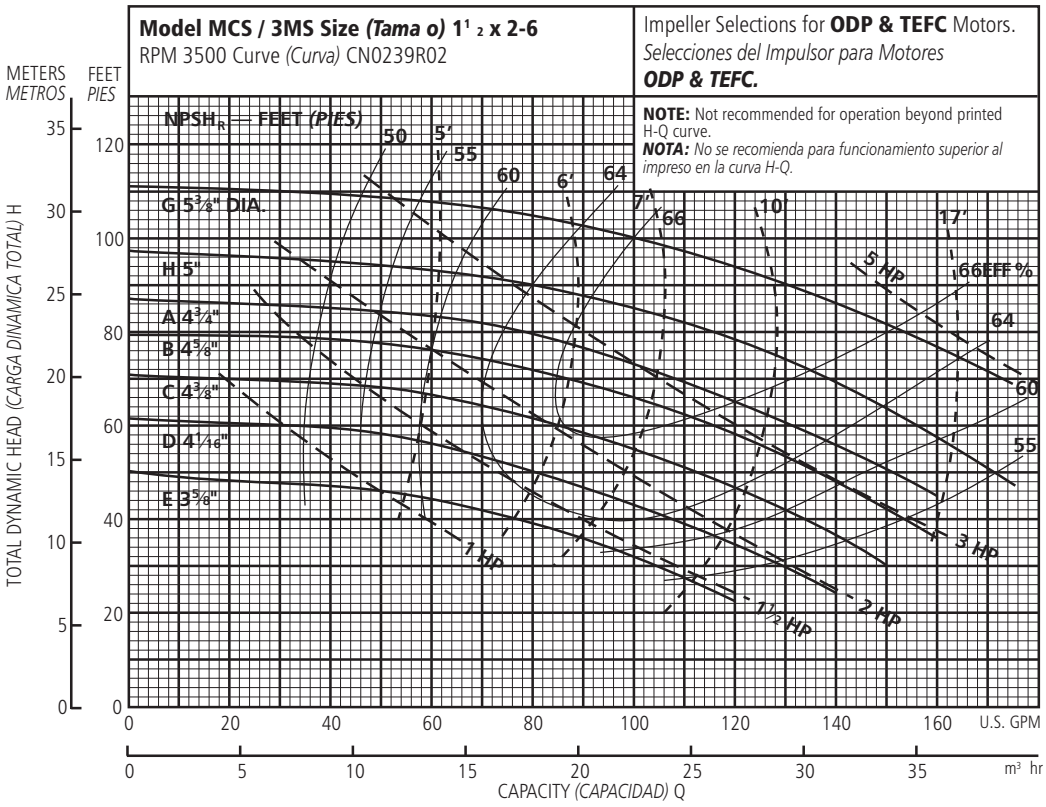

Ordering Code, *Código de Pedido*	Standard HP Rating, *Capacidad HP estándar*	Imp. Dia.
E	1	3 5/8"
D	1 1/2	4 1/16
C	2	4 3/8
B	3	4 5/8
A	3	4 3/4
H	5	5
G	5	5 3/8

NOTE: Although not recommended, the pump may pass a 11/32" sphere.

NOTA: *Si bien no se recomienda, la bomba puede pasar una esfera de 11/32".*

Performance Curves – 50 Hz, 2900 RPM
Curvas de desempeño – 50 Hz, 2900 RPM

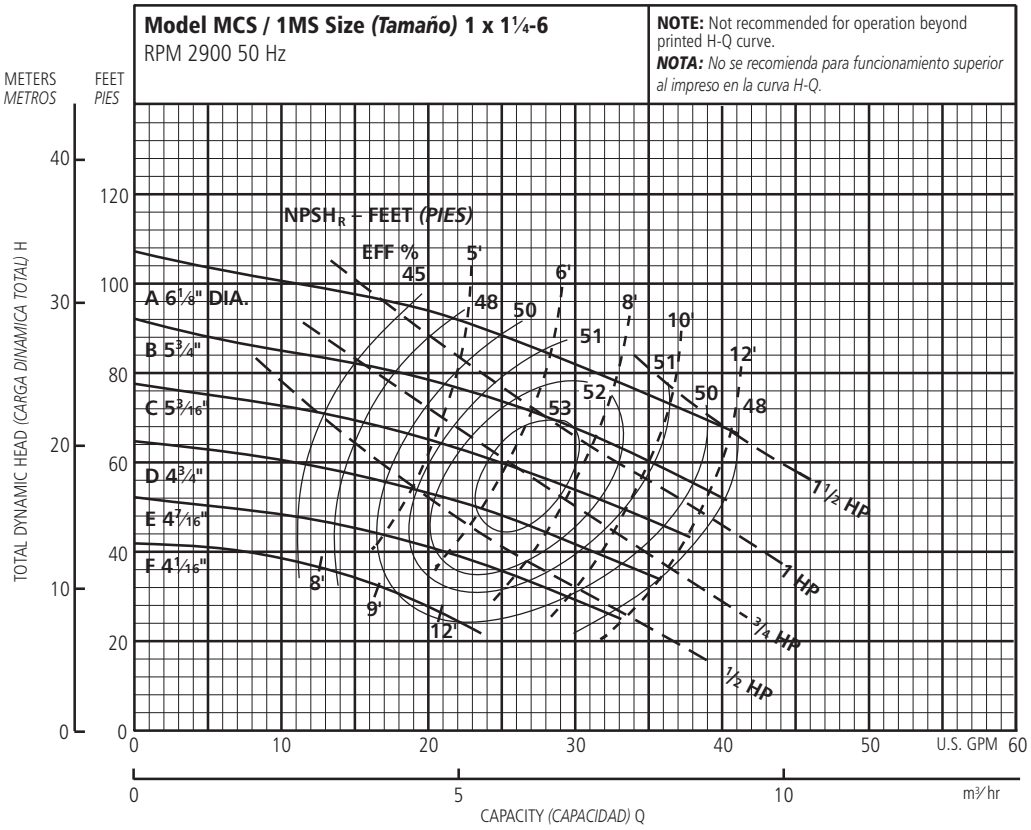

Optional Impeller, *Impulsor Opcional*	
Ordering Code, *Código de Pedido*	**Dia.**
A	6 1/8"
B	5 3/4
C	5 3/16
D	4 3/4
E	4 7/16
F	4 1/16

NOTE: Although not recommended, the pump may pass a 1/16" sphere.

NOTA: *Si bien no se recomienda, la bomba puede pasar una esfera de 1/16".*

Performance Curves – 50 Hz, 2900 RPM
Curvas de desempeño – 50 Hz, 2900 RPM

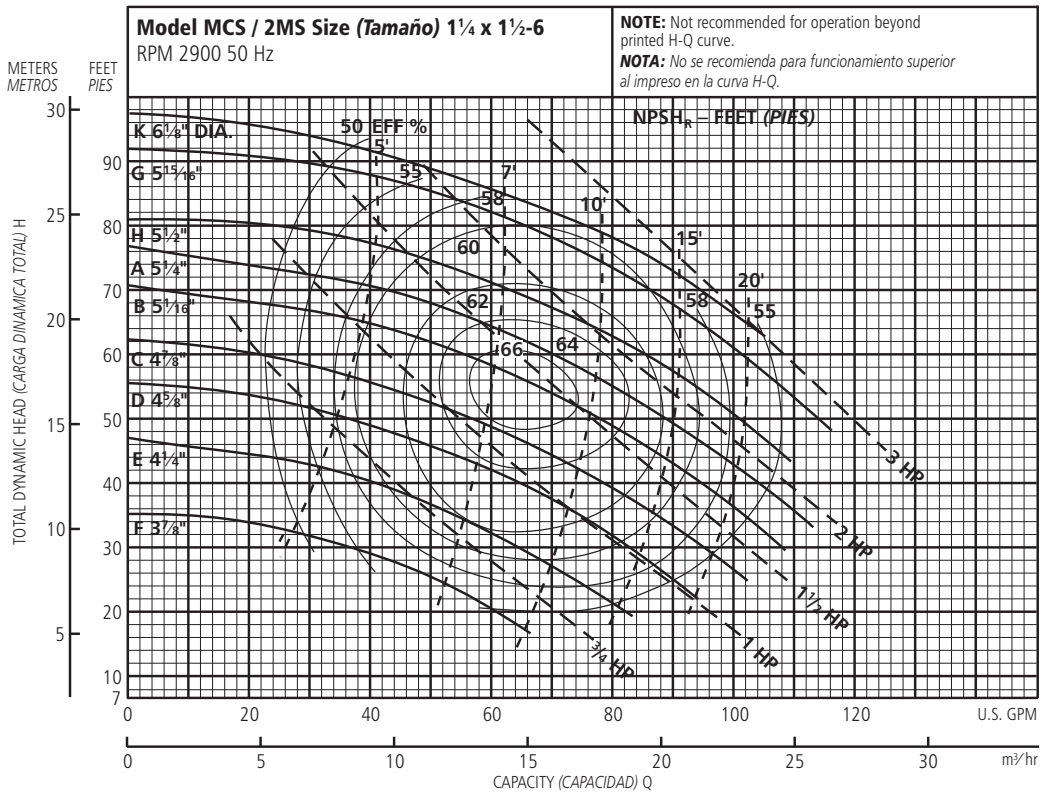

Optional Impeller, *Impulsor Opcional*	
Ordering Code, *Código de Pedido*	**Dia.**
K	6⅛"
G	5¹⁵⁄₁₆"
H	5½
A	5¼
B	5¹⁄₁₆
C	4⅞
D	4⅝
E	4¼
F	3⅞

NOTE: Although not recommended, the pump may pass a ³⁄₁₆" sphere.

NOTA: *Si bien no se recomienda, la bomba puede pasar una esfera de ³⁄₁₆".*

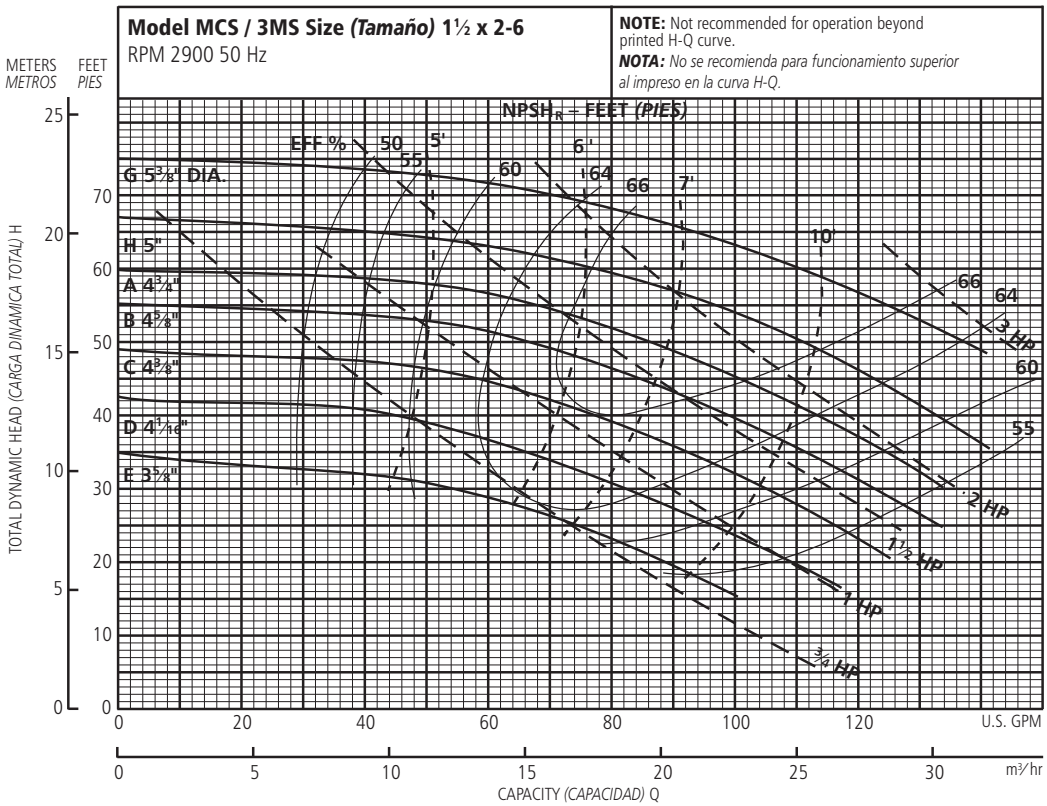

Optional Impeller, *Impulsor Opcional*	
Ordering Code, *Código de Pedido*	**Dia.**
G	5⅜"
H	5
A	4¾
B	4⅝
C	4⅜
D	4¹⁄₁₆
E	3⅝

NOTE: Although not recommended, the pump may pass a ¹¹⁄₃₂" sphere.

NOTA: *Si bien no se recomienda, la bomba puede pasar una esfera de ¹¹⁄₃₂".*

ITT

Commercial Water

Specifications, *Especificaciones*

Capacities to:
170 GPM (550L/min) at 3500 RPM

Heads to:
150 feet (46 m) at 3500 RPM

Working pressures to:
75 PSIG (5 bars)
125 PSIG (9 bars) optional seals

Maximum temperatures to: 212°F (100°C) with standard seal or 250°F (121°C) with optional high temperature seal.

Direction of rotation:
Clockwise when viewed from motor end.

Motor specifications:
NEMA 56 square flange frame. 3500 RPM ½ through 5 HP. Open drip-proof, ½ -3 HP totally enclosed fan-cooled enclosures. Stainless steel shaft with ball bearings.

Single phase: Voltage 115/230 ODP and TEFC. (3 HP model – 230 V only) Built-in overload with auto-reset provided.

Three phase: Voltage 208-230/460 ODP and TEFC.

NOTE: For three phase motors, overload protection must be provided in starter unit. Starter and heaters must be ordered separately.

Capacidades:
170 GPM (550L/min) a 3500 RPM

Cargas:
150 pies (46 m) a 3500 RPM

Presión de trabajo:
75 PSIG (5 baras)
125 PSIG (9 baras) con sellos opcionales

Temperatura máxima:
212°F (100°C) con sello estándar o 250°F (121°C) con sello opcional para alta temperatura.

Dirección de rotación:
En dirección de las agujas del reloj visto desde el extremo del motor.

Motores:
Bastidor NEMA 56 con brida cuadrada, 3500 RPM de ½ a 5 HP. Abierto resguardado, ½ a 3 HP totalmente encerrado con alojamiento enfriado por ventilador. Eje de acero inoxidable con cojinetes de bola.

Monofásicos: Voltaje 115/230 ODP y TEFC. (modelo 3 HP – 230 voltios solamente). Se proporciona protección contra sobrecarga incorporada con restablecimiento automático.

Trifásicos: Voltaje 208-230/460 ODP & TEFC.

NOTA: *Para los motores trifásicos se debe proporcionar la protección contra sobrecarga en la unidad de arranque. El arrancador y los calentadores se deben pedir por separado.*

Typical Applications, *Aplicaciones típicas*

Specifically designed for a broad range of general applications traditionally requiring various materials such as all iron, bronze fitted or all bronze construction.

- Water circulation
- Booster service
- Liquid transfer
- Spray system
- Chillers
- Washing/cleaning systems
- Injection molding cooling
- Reverse osmosis
- Air scrubbers
- Heat exchangers
- Filtration systems
- Jockey pumps
- OEM applications
- General water services

Diseñadas específicamente para una amplia variedad de aplicaciones generales, requiriendo tradicionalmente varios materiales, tales como hierro, bronce empotrado o todas las construcciones de bronce.

- *Circulación de agua*
- *Aumento de presión*
- *Transferencia de líquidos*
- *Sistemas de aspersión*
- *Enfriadores*
- *Sistemas de lavado/limpieza*
- *Enfriamiento de moldeo por inyección*
- *Osmosis reversa*
- *Depuradores de aire*
- *Intercambiadores de calor*
- *Sistemas de filtración*
- *Bombas auxiliares*
- *Aplicaciones de fabricantes originales de equipos*
- *Servicios generales de agua*

GOULDS PUMPS

Goulds Pumps, G&L and the ITT Engineered Blocks Symbol are registered trademarks and tradenames of ITT Corporation.

Goulds Pumps, G&L y el símbolo ITT Engineered Blocks son marcas registradas y marcas comerciales de ITT Corporation.

SPECIFICATIONS ARE SUBJECT TO CHANGE WITHOUT NOTICE.

LAS ESPECIFICACIONES ESTÁN SUJETAS A CAMBIO SIN PREVIO AVISO.

GLMCS March, 2008
© 2008 ITT Corporation

Marzo de 2008

Engineered for life

1 Goulds Drive, Auburn, NY 13021

Printed on recycled paper.

Transfer Pump P-1 #1MS1C5E4

ITT

Commercial Water

Goulds Pumps

G&L SERIES

MODEL MCS

Installation, Operation and
Maintainence Instructions

GOULDS PUMPS

Goulds Pumps is a brand of ITT Water Technology, Inc.
- a subsidiary of ITT Industries, Inc.

www.goulds.com

Engineered for life

Table of Contents

SUBJECT	PAGE
Safety Instructions	3
Important	3
Installation	3
Suction Piping	3
Discharge Piping	4
Rotation	4
Operation	4
Maintenance	4
Disassembly	4
Reassembly	4
Troubleshooting	5
Parts List	6
Mechanical Seal Application Chart	6
Limited Warranty	7
Declaration of Conformity	16

Owner's Information

Pump Model Number: _____

Pump Serial Number: _____

Dealer: _____

Dealer Phone No.: _____

Date of Purchase: _____

Date of Installation: _____

Current Readings at Startup:

1 Ø	3 Ø	L1-2	L2-3	L3-1
Amps: _____	Amps: _____	_____	_____	_____
Volts: _____	Volts: _____	_____	_____	_____

SAFETY INSTRUCTIONS

TO AVOID SERIOUS OR FATAL PERSONAL INJURY OR MAJOR PROPERTY DAMAGE, READ AND FOLLOW ALL SAFETY INSTRUCTIONS IN MANUAL AND ON PUMP.

THIS MANUAL IS INTENDED TO ASSIST IN THE INSTALLATION AND OPERATION OF THIS UNIT AND MUST BE KEPT WITH THE PUMP.

This is a **SAFETY ALERT SYMBOL.** When you see this symbol on the pump or in the manual, look for one of the following signal words and be alert to the potential for personal injury or property damage.

⚠ DANGER Warns of hazards that **WILL** cause serious personal injury, death or major property damage.

⚠ WARNING Warns of hazards that **CAN** cause serious personal injury, death or major property damage.

⚠ CAUTION Warns of hazards that **CAN** cause personal injury or property damage.

NOTICE: INDICATES SPECIAL INSTRUCTIONS WHICH ARE VERY IMPORTANT AND MUST BE FOLLOWED.

THOROUGHLY REVIEW ALL INSTRUCTIONS AND WARNINGS PRIOR TO PERFORMING ANY WORK ON THIS PUMP.

MAINTAIN ALL SAFETY DECALS.

⚠WARNING

Hazardous fluids can cause fire, burns or death.

UNIT NOT DESIGNED FOR USE WITH HAZARDOUS LIQUIDS OR FLAMMABLE GASES. THESE FLUIDS MAY BE PRESENT IN CONTAINMENT AREAS.

DESCRIPTION and SPECIFICATIONS:

The Model MCS is a close coupled, end suction, centrifugal pump for general liquid transfer service, booster applications, etc. Liquid-end construction is all AISI Type 304 stainless steel, stamped and welded. Impellers are fully enclosed, non-trimmable to intermediate diameters. Casings are fitted with diffusers for efficiency and for negligible radial shaft loading.

All units have NEMA 48Y or 56Y motors with square flange mounting and threaded shaft extension.

1. IMPORTANT

1.1. Inspect unit for damage. Report any damage to carrier/dealer immediately.

1.2. Electrical supply must be a separate branch circuit with fuses or circuit breakers, wire sizes, etc., in compliance with National and Local electrical codes. Install an all-leg disconnect switch near pump.

⚠ CAUTION **Always disconnect electrical power when handling pump or controls.**

1.3. Motors must be wired for proper voltage. Motor wiring diagram is on motor nameplate. Wire size must limit maximum voltage drop to 10% of nameplate voltage at motor terminals, or motor life and pump performance will be lowered.

1.4. Always use horsepower-rated switches, contactor and starters.

1.5. Motor Protection

1.5.1. Single-phase: Thermal protection for single-phase units is sometimes built in (check nameplate). If no built-in protection is provided, use a contactor with a proper overload. Fusing is permissible.

1.5.2. Three-phase: Provide three-leg protection with properly sized magnetic starter and thermal overloads.

1.6. Maximum Operating Limits:

Liquid Temperature:	212°F (100°C) with standard seal 250°F (120°C) with high temperature seal.
Working Pressure:	75 PSI with standard seal 125 PSI with optional seals.
Starts per Hour:	20, evenly distributed.

1.7. Regular inspection and maintenance will increase service life. Base schedule on operating time. Refer to Section 8.

2. INSTALLATION

2.1. Locate pump as near liquid source as possible (below level of liquid for automatic operation).

2.2. Protect from freezing or flooding.

2.3. Allow adequate space for servicing and ventilation.

2.4. All piping must be supported independently of the pump, and must "line-up" naturally.

⚠ CAUTION **Never draw piping into place by forcing the pump suction and discharge connections.**

2.5. Avoid unnecessary fittings. Select sizes to keep friction losses to a minimum.

2.6. Units may be installed horizontally, inclined or vertically.

⚠ CAUTION **Do not install with motor below pump. Any leakage or condensation will affect the motor.**

2.7. Foundation must be flat and substantial to eliminate strain when tightening bolts. Use rubber mounts to minimize noise and vibration.

2.8. Tighten motor hold-down bolts before connecting piping to pump.

3. SUCTION PIPING

3.1. Low static suction lift and short, direct, suction piping is desired. Consult pump performance curve for *Net Positive Suction Head Required.*

3.2. Suction pipe must be at least as large as the suction connection of the pump. Smaller size will degrade performance.

3.3. If larger pipe is required, an eccentric pipe reducer (with straight side up) must be installed at the pump.

3.4. Installation with pump below source of supply:

3.4.1. Install full flow isolation valve in piping for inspection and maintenance.

⚠ CAUTION **Do not use suction isolation valve to throttle pump.**

3.5. Installation with pump above source of supply:

3.5.1. Avoid air pockets. No part of piping should be higher than pump suction connection. Slope piping upward from liquid source.

3.5.2. All joints must be airtight.

3.5.3. Foot valve to be used only if necessary for priming, or to hold prime on intermittent service.

3.5.4. Suction strainer open area must be at least triple the pipe area.

3.6. Size of inlet from liquid source, and minimum submergence over inlet, must be sufficient to prevent air entering pump through vortexing. See Figures 1 through 4.

3.7. Use 3 to 4 wraps of Teflon tape to seal threaded connections.

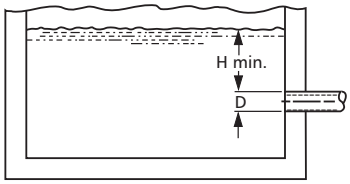

Figure 1

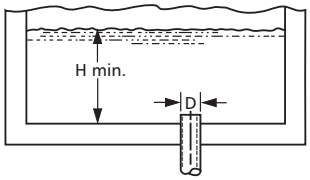

Figure 2

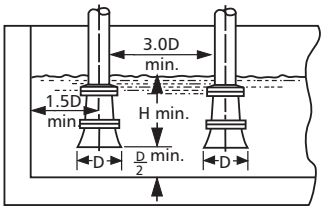

Figure 3

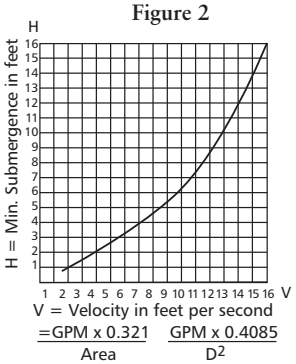

Figure 4

4. DISCHARGE PIPING

4.1. Arrangement must include a check valve located between a gate valve and the pump. The gate valve is for regulation of capacity, or for inspection of the pump or check valve.

4.2. If an increaser is required, place between check valve and pump.

4.3. Use 3 to 4 wraps of Teflon tape to seal threaded connections.

5. ROTATION

5.1. Correct rotation is right-hand (clockwise when viewed from the motor end). Switch power on and off quickly. Observe shaft rotation. To change rotation:

5.1.1. Single-phase motor: Non-reversible

5.1.2. Three-phase motor: Interchange any two power supply leads.

6. OPERATION

6.1. Before starting, pump must be primed (free of air and suction pipe full of liquid) and discharge valve partially open.

6.2. Make complete check after unit is run under operating conditions and temperature has stabilized. Check for expansion of piping.

7. MAINTENANCE

7.1. Ball bearings are located in and are part of the motor. They are permanently lubricated. No greasing required.

⚠ CAUTION **Pumped liquid provides lubrication. If pump is run dry, rotating parts will seize and mechanical seal will be damaged. Do not operate at or near zero flow. Energy imparted to the liquid is converted into heat. Liquid may flash to vapor. Rotating parts require liquid to prevent scoring or seizing.**

8. DISASSEMBLY

Complete disassembly of the unit will be described. Proceed only as far as required to perform the maintenance work required.

8.1. Turn off power.

8.2. Drain system and flush if necessary.

8.3. Remove motor hold-down bolts.

8.4. Disassembly of Liquid End

8.4.1. Remove casing bolts (370).

8.4.2. Remove back pull-out assembly from casing (100).

8.4.3. Remove impeller locknut (304).

⚠ CAUTION **Do not insert screwdriver between impeller vanes to prevent rotation of close-coupled units. Remove cap at opposite end of motor. A screwdriver slot or a pair of flats will be exposed. Using them will prevent impeller damage.**

8.4.4. Remove impeller (101) by turning counter-clockwise when looking at the front of the pump. Protect hand with rag or glove.

⚠ CAUTION **Failure to remove the impeller in a counter-clockwise direction may damage threading on the impeller, shaft or both.**

8.4.5. With two pry bars 180 degrees apart and inserted between the seal housing (184) and the motor adapter (108), carefully separate the two parts. The mechanical seal rotary unit (383) should come off the shaft with the seal housing.

8.4.6. Push out the mechanical seal stationary seat from the motor side of the seal housing.

9. REASSEMBLY

9.1. All parts should be cleaned before assembly.

9.2. Refer to parts list to identify required replacement items. Specify pump index or catalog number when ordering parts.

9.3. Reassembly is the reverse of disassembly.

9.4. Observe the following when reassembling the liquid-end:

9.4.1. All mechanical seal components must be in good condition or leakage may result. Replacement of complete seal assembly, whenever seal has been removed, is good standard practice.

It is permissible to use a light lubricant, such as glycerin, to facilitate assembly. Do not contaminate the mechanical seal faces with lubricant.

9.4.2. Inspect casing O-ring (513) and replace if damaged. This O-ring may be lubricated with petroleum jelly to ease assembly.

9.4.3. Inspect guidevane seal ring (349) and replace if worn.

⚠ CAUTION **Do not lubricate guidevane seal ring (349). Insure it is not pinched by the impeller on reassembly.**

9.5. Check reassembled unit for binding. Correct as required.

9.6. Tighten casing bolts in a star pattern to prevent O-ring binding.

10. TROUBLE SHOOTING CHART

MOTOR NOT RUNNING
(See causes 1 through 6)

LITTLE OR NO LIQUID DELIVERED
(See causes 7 through 17)

POWER CONSUMPTION TOO HIGH
(See causes 4, 17, 18, 19, 22)

EXCESSIVE NOISE AND VIBRATION
(See causes 4, 6, 9, 13, 15, 16, 18, 20, 21, 22)

PROBABLE CAUSE:

1. Tripped thermal protector
2. Open circuit breaker
3. Blown fuse
4. Rotating parts binding
5. Motor wired improperly
6. Defective motor
7. Not primed
8. Discharge plugged or valve closed
9. Incorrect rotation
10. Foot valve too small, suction not submerged, inlet screen plugged.
11. Low voltage
12. Phase loss (3-phase only)
13. Air or gasses in liquid
14. System head too high
15. NPSHA too low:
    Suction lift too high or suction losses excessive. Check with vacuum gauge.
16. Impeller worn or plugged
17. Incorrect impeller diameter
18. Head too low, causing excessive flow rate
19. Viscosity or specific gravity too high
20. Worn bearings
21. Pump or piping loose
22. Pump and motor misaligned

PARTS LIST

Item No.	Description	Materials
100	Casing	AISI 316L SS
101	Impeller	
108	Motor adapter	Steel
123	Deflector	BUNA-N
184	Seal housing	AISI 316L SS
347	Guidevane	
349	Seal ring, guidevane	BUNA-N
370	Socket head screws, casing	AISI 410 SS
371	Bolts, motor	Plated steel
383	Mechanical seal	See chart
408	Drain and vent plug, casing	AISI 316L SS
412B	O-ring, drain and vent plug	Viton (standard) BUNA / EPR (optional)
513	O-ring, casing	
Motor	NEMA standard, 56Y frame	

MECHANICAL SEAL APPLICATION CHART

Rotary	Stationary	Elastomers	Metal Parts	Part No.
Carbon	Ceramic	BUNA	18-8SS	10K10
	Silicon Carbide	EPR	316SS	10K18
		Viton		10K55
Silicon Carbide		EPR		10K81
		Viton		10K62

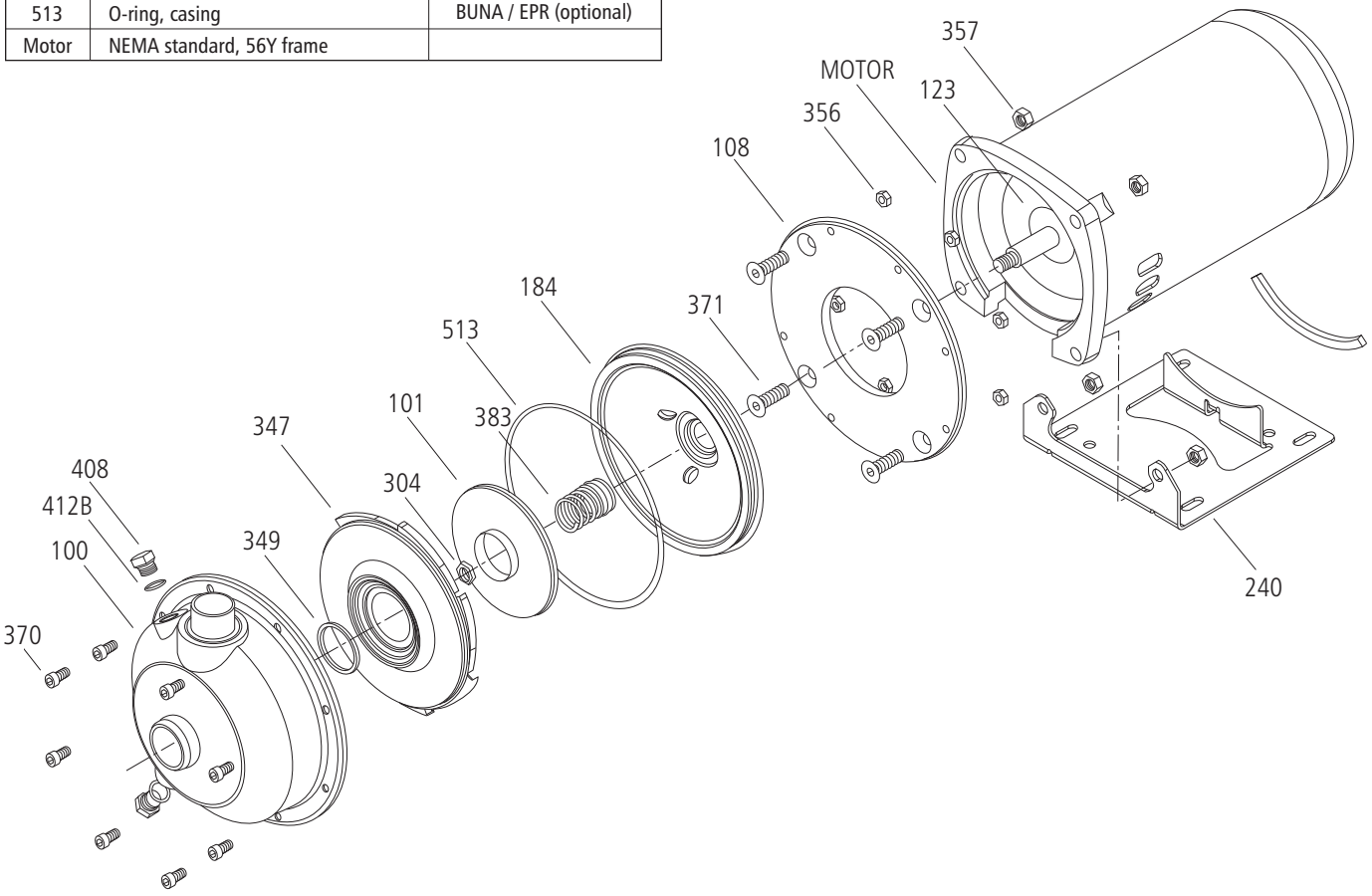

GOULDS PUMPS LIMITED WARRANTY

This warranty applies to all water systems pumps manufactured by Goulds Pumps.

Any part or parts found to be defective within the warranty period shall be replaced at no charge to the dealer during the warranty period. The warranty period shall exist for a period of twelve (12) months from date of installation or eighteen (18) months from date of manufacture, whichever period is shorter.

A dealer who believes that a warranty claim exists must contact the authorized Goulds Pumps distributor from whom the pump was purchased and furnish complete details regarding the claim. The distributor is authorized to adjust any warranty claims utilizing the Goulds Pumps Customer Service Department.

The warranty excludes:

(a) Labor, transportation and related costs incurred by the dealer;
(b) Reinstallation costs of repaired equipment;
(c) Reinstallation costs of replacement equipment;
(d) Consequential damages of any kind; and,
(e) Reimbursement for loss caused by interruption of service.

For purposes of this warranty, the following terms have these definitions:

(1) "Distributor" means any individual, partnership, corporation, association, or other legal relationship that stands between Goulds Pumps and the dealer in purchases, consignments or contracts for sale of the subject pumps.
(2) "Dealer" means any individual, partnership, corporation, association, or other legal relationship which engages in the business of selling or leasing pumps to customers.
(3) "Customer" means any entity who buys or leases the subject pumps from a dealer. The "customer" may mean an individual, partnership, corporation, limited liability company, association or other legal entity which may engage in any type of business.

THIS WARRANTY EXTENDS TO THE DEALER ONLY.

GOULDS PUMPS

Goulds Pumps, G&L and the ITT Engineered Blocks Symbol are registered trademarks and tradenames of ITT Industries Inc.

SPECIFICATIONS ARE SUBJECT TO CHANGE WITHOUT NOTICE.

IM052R03 February, 2006

© 2006 ITT Water Technology, Inc.

Engineered for life

CARBTROL®

AIR PURIFICATION CANISTERS 140-200 LB. ACTIVATED CARBON

G-1
G-2
G-3

The CARBTROL "G" Canisters handles flows up to 500 CFM.

FEATURES

- High activity carbon.
- Epoxy lined steel or polyethylene construction.
- Acceptable for transport of hazardous spent carbon.
- Side drain for removal of accumulated condensate.
- Low pressure drop.
- PVC internal piping.
- High temperature (180°F) steel units available.

APPLICATIONS

- Soil vapor remediation
- Air stripper exhausts
- Tank vents
- Exhaust hoods
- Work area purification
- Sewage plant odor control

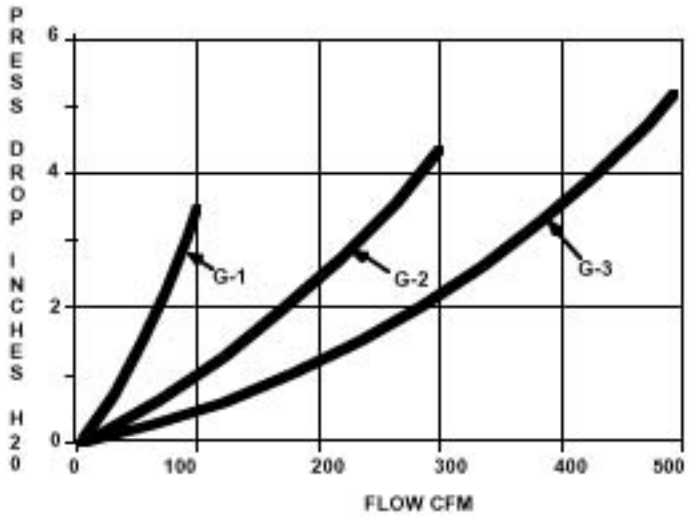

© Copyright 1991 Carbtrol Corporation - 10/4/02

AT-116/#1

CARBTROL®
CORPORATION

955 Connecticut Ave., Suite 5202
Bridgeport, CT 06607

800-242-1150 Fax: 203-337-4347
www.carbtrol.com info@carbtrol.com

CARBTROL®

AIR PURIFICATION CANISTERS
140-200 LB. ACTIVATED CARBON

G-1
G-2
G-3

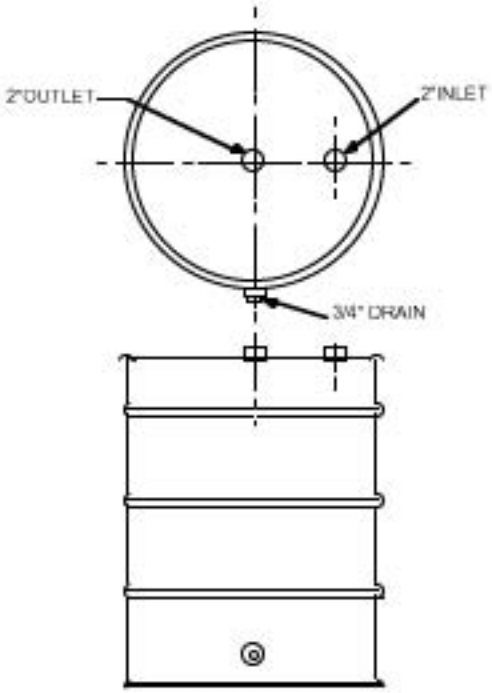

MODEL G-1

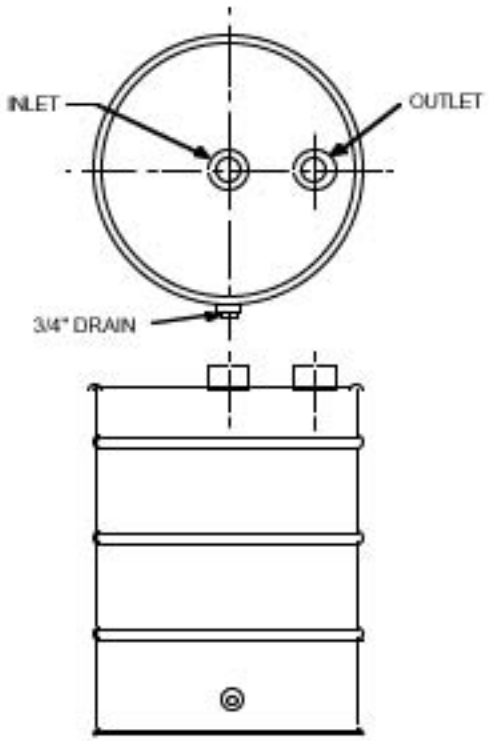

MODEL G-2,G-3

SPECIFICATIONS

MODEL	DIAMETER/HEIGHT	CARBON WEIGHT	INLET/OUTLET	MAXIMUM RATED FLOW	APPROXIMATE SHIP WEIGHT
G-1*	24"/36"	200 lbs.	2"/2"	100 CFM	250 lbs.
G-2*	24"/36"	170 lbs.	4"/4"	300 CFM	220 lbs.
G-3P	24"/36"	140 lbs.	6"/6"	500 CFM	190 lbs.
G-3S	24"/34"	140 lbs.	4"/4"	500 CFM	180 lbs.

* Specify: Polyethylene (P) or Epoxy Lined Steel (S)

SAFETY

Certain chemical compounds in the presence of activated carbon may oxidize, decompose or polymerize. This could result in temperature increases sufficient to cause ignition of the activated carbon or adsorbed material. If a compounds reaction with activated carbon is unknown, appropriate tests should be considered.

CARBTROL®
CORPORATION

955 Connecticut Ave., Suite 5202
Bridgeport, CT 06607

800-242-1150 Fax: 203-337-4347
www.carbtrol.com info@carbtrol.com

2. Soil Vapor Extraction Instrumentation/Switches

EnviroTrac

Vacuum Gauges (0-100” H2O)
Model#25-200-100-In.H2O Vac

Pressure Gauges (0-100” H2O)
Model#40-200-30-In.H2O

GENERAL INFORMATION

NOSHOK 200 Series Diaphragm Gauges are designed for extremely low pressure or vacuum measurement. The ultra sensitive diaphragm capsules are rated for pressure (or vacuum) as low as 0-10 **inches of water** and as high as 0-10 **psi**.

The cases are constructed of black painted steel on the 2 ½" size and 304 Stainless Steel on the 4" size. The lenses are molded plexiglass on the 2½" size and instrument glass on the 4" size for strength and clarity. The diaphragm capsules are phosphor bronze and when coupled to the precision all-brass movements, provide extremely accurate indication over the service life of the gauge.

Available options include a recalibrator on the 2½" size (accessible through the front of the dial) and overpressure protection of up to 200% of the dial range. Mounting options include 304 stainless steel or black steel triangular bezels and U-Clamps in addition to chrome or black steel front flanges.

Applications for **NOSHOK 200 Series Gauges** include medical, biomedical, heating-ventilating and air conditioning, gas distribution, filtration, burner and gas combustion service, waste water treatment and everywhere low pressure and vacuum measurement is required.

Installation

Prior to pressure gauge installation, the following conditions should be considered: temperature, humidity, vibration, pulsation, shock, and other climatic and environmental conditions of the application, as well as the potential need for protective accessories and/or special installation requirements.

Always use a wrench on the gauge socket when installing a NOSHOK pressure gauge into position; never use force on the gauge case to tighten into position. This may result in a loss of accuracy, excessive friction and/or mechanical damage to the measuring element and case of the NOSHOK pressure gauge. When surface or panel mounting a gauge, be sure the surface is flat and the panel cutout and/or the mounting hole configuration is correct (please refer to the NOSHOK Pressure Gauge catalog NK95G for these specifications). If the surface is uneven or the panel cutout is larger than the gauges diameter, use an adapter ring to remove mounting strain and/or adapt the gauge to the larger diameter panel cutout. When connecting a gauge to a rigid pipe service, use flexible tubing where possible as a connector to eliminate plumbing strain. Rapid pressure pulsation and extreme mechanical vibration may be damaging to some NOSHOK pressure gauge movement gearing, bushings, and linkage. In extreme cases, steps should be taken to dampen these forces. In pressure ranges over 600 psi, a NOSHOK orifice is recommended for pulsation dampening, but in extreme pulsation applications a NOSHOK Piston Type Pressure Snubber may be required.

When installing a gauge into a corrosive situation be sure to select a pressure gauge or pressure gauge and diaphragm seal combination suitable for your application. Gauges to be used on high temperature service should have a five foot or longer leg of pipe or tubing connecting the gauge to dissipate heat and protect the gauge measuring element from damage.

A gauge to be used on steam pressure service should be installed with a water filled NOSHOK pigtail steam siphon between the gauge and the steam line.

Maintenance

Apart from occasional calibration, NOSHOK pressure gauges require little or no maintenance. Some applications may be more aggressive than others, resulting in an increased frequency in the need for calibration. The environmental limitations for the specific NOSHOK pressure gauge series should be observed in all cases, and gauges applied in situations outside these requirements may result in premature wear and/or failure of the gauge.

Warranty

All NOSHOK pressure gauges carry a one or three year warranty. NOSHOK warrants for three years our 300, 500, 600, 700 and 900 series liquid filled pressure gauges to be free from defects in materials and workmanship, to remain within the cataloged accuracy and performance specifications, and to maintain the integrity of the hermetically sealed case preventing leakage. NOSHOK warrants for one year our 100, 200, 400, 600, 700, and 800 series non-liquid filled pressure gauge. Certain limitations do apply; for more information please consult page three of the NOSHOK Pressure Gauges catalog (NK95G).

Please do not hesitate to contact us with any additional questions.

The Instrumentation Company
NOSHOK INCORPORATED

1010 WEST BAGLEY ROAD
BEREA, OHIO 44017
440/243-0888 FAX 440/243-3472
E-MAIL: noshok@noshok.com
WEBSITE: www.noshok.com

Bulletin P-616W

Series 616W Differential Pressure Transmitter

Specifications - Installation and Operating Instructions

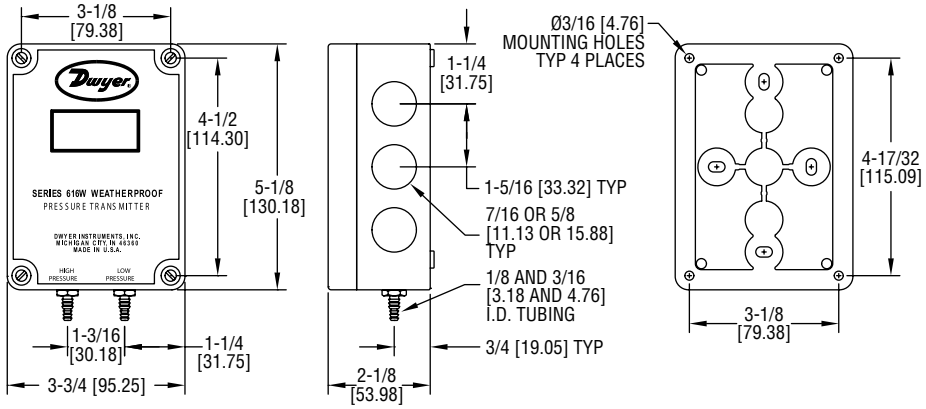

The **SERIES 616W** Differential Pressure Transmitter senses the pressure of air and non-combustible, compatible gases and sends a standard 4 to 20 mA or selectable 0 to 5/0 to 10 VDC output signal. All models, including those featuring an LCD, are factory calibrated to specific ranges. Positive, negative, and differential pressures can be measured within a full scale accuracy of ±0.25%. This weatherproof unit is enclosed in a polycarbonate case, rated IP66/NEMA 4X. The span and zero controls are for use when checking calibration, and are not intended for re-ranging.

Series 616W Transmitter Models & Ranges

MODEL CHART			
Model	**Range**	**Max. Pressure**	**Digital Display**
616W-2	0 to 6 in w.c.	10 psig	–
616W-3	0 to 10 in w.c.	10 psig	–
616W-4	0 to 20 in w.c.	20 psig	–
616W-5	0 to 40 in w.c.	20 psig	–
616W-6	0 to 100 in w.c.	15 psig	–
616W-7	0 to 200 in w.c.	45 psig	–
616W-2-LCD	0 to 6 in w.c.	10 psig	0 to 6.00
616W-3-LCD	0 to 10 in w.c.	10 psig	0 to 10.00
616W-4-LCD	0 to 20 in w.c.	20 psig	0 to 20.0
616W-5-LCD	0 to 40 in w.c.	20 psig	0 to 40.0
616W-6-LCD	0 to 100 in w.c.	15 psig	0 to 100.0
616W-7-LCD	0 to 200 in w.c.	45 psig	0 to 200.0
616W-6B-LCD	3-0-3 in w.c.	10 psig	-3.00-0-3.00
616W-10B-LCD	5-0-5 in w.c.	10 psig	-5.00-0-5.00
616W-20B-LCD	10-0-10 in w.c.	10 psig	-10.00-0-10.00
616W-2M-LCD	0 to 1.5 kPa	68.9 kPa	0 to 1.50
616W-3M-LCD	0 to 2.5 kPa	68.9 kPa	0 to 2.50
616W-4M-LCD	0 to 5 kPa	137.8 kPa	0 to 5.00
616W-5M-LCD	0 to 10 kPa	103.4 kPa	0 to 10.0

Table 1

SPECIFICATIONS

Service: Air and non-combustible, compatible gases.
Wetted Materials: Consult factory.
Accuracy: 0.25% FS @ 77°F (25°C), display accuracy ±0.5%.
Thermal Effect: ±0.02% FS/°F (±0.036% FS/°C).
Stability: ±1% FS/yr.
Temperature Limits: 14 to 185°F (-10 to 85°C).
Pressure Limits: See chart.
Power Requirements: 10 to 35 VDC (2-wire), 17 to 36 VDC, or isolated 21.6 to 33 VAC (3-wire).
Output Signal: 4 to 20 mA (2-wire), 0 to 5 VDC, or 0 to 10 VDC (3-wire)
Zero and Span Adjustments: Push buttons.
Loop Resistance: Current Output: 0 to 1250 Ω (max); Voltage Output: Load resistance 1 kΩ (min).
Current Consumption: 40 mA max.
Electrical Connections: 3-wire removable European style terminal block for 16 to 26 AWG.
Process Connections: Barbed, dual size to fit 1/8" and 3/16" (3.12 and 4.76 mm) I.D. rubber or vinyl tubing.
Enclosure Rating: NEMA 4X (IP66).
Mounting Orientation: Any orientation.
Weight: Without LCD: 8.8 oz (249 g); With LCD: 9.6 oz (272 g).
Agency Approvals: CE.

DWYER INSTRUMENTS, INC.
P.O. BOX 373 • MICHIGAN CITY, INDIANA 46360, U.S.A.
Phone: 219/879-8000 **www.dwyer-inst.com**
Fax: 219/872-9057 **e-mail: info@dwyermail.com**

INSTALLATION

1. Location: Select a clean, dry mounting location free from excess vibration where the temperature will remain between 14 to 185°F (-10 to 85°C). Distance from the receiver is limited only by total loop resistance. See Electrical Connections below. The tubing supplying pressure to the instrument can be practically any length required, but long lengths will increase response time slightly.

2. Position: A vertical position, with the pressure connection pointing down, is recommended. That is the position in which all standard models are spanned and zeroed at the factory. They can be used at other angles, but final spanning and zeroing must be done while the transmitter is in that alternate position.

3. Pressure Connections: Two integral barbed tubing connections are provided. They are dual-sized to fit both 1/8" and 3/16" (3.12 and 4.76 mm) I.D. tubing. Be sure the pressure rating of the tubing exceeds that of the operating range. On ranges over 20 psi, we recommend use of a suitable hose clamp to assure the integrity of the connection.

ELECTRICAL CONNECTIONS

CAUTION Do not exceed specified supply voltage ratings. Permanent damage not covered by warranty will result. This unit is not designed for 120 or 240 VAC line operation.

Electrical connections are made to the terminal block located on the inside of the transmitter. Determine which of the following circuit drawings best applies to your application and wire accordingly.

Electrical Connection

The Series 616W simultaneously transmits a 2-wire 4 to 20 mA current output and a 3-wire 0 to 5 V / 0 to 10 V voltage output via a removable European-style three conductor terminal block. The transmitter can be wired in one of the following three ways to utilize the current and/or voltage output.

Power Supply

Refer to Table 2 for the required supply rating.

MODEL CHART	
Output Type	**Power Supply Rating**
2-wire current	10 to 35 VDC (40 mA min)
3-wire current	17 to 36 VDC or 21.6 to 33 VAC (40 mA min)
Simultaneous current and voltage	17 to 35 VDC (40 mA min)

Table 2

Choose a power supply with a voltage and current rating sufficient to meet the power specifications under all operating conditions. If the supply is unregulated, make sure that the output voltage remains within the required voltage range under all power line conditions. Ripple on the supply should not exceed 100 mV.

AC/DC Jumper Selection

NOTICE The jumper is factory set to AC. If DC power is applied while the jumper is set to AC, no damage will occur. However, the accuracy of the unit may be temporarily affected.

CAUTION Powering the unit with AC power while the jumper is set to DC may permanently damage the transmitter.

Refer to Figure 1 for the location of the AC/DC jumper. Place the shorting jumper across either the two pins marked AC or the two pins marked DC.

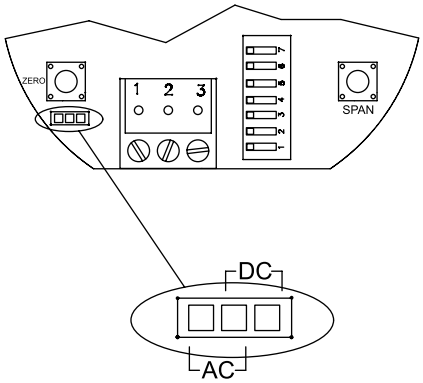

Figure 1: AC/DC Jumper

2-Wire 4 to 20 mA Current Operation

CAUTION Do not exceed specified supply voltage ratings. Permanent damage not covered by warranty will result. Simultaneous outputs are not designed for AC voltage operation.

The connections to the transmitter are made through terminals 2 and 3 on the terminal block as shown in Figure 2. The terminal block is removable and each of the terminals are labeled underneath the terminal block on the circuit board. Polarity is indicated by terminals 2 (+IOUT) and 3 (–IOUT). The AC/DC selection jumper should be set for DC operation.

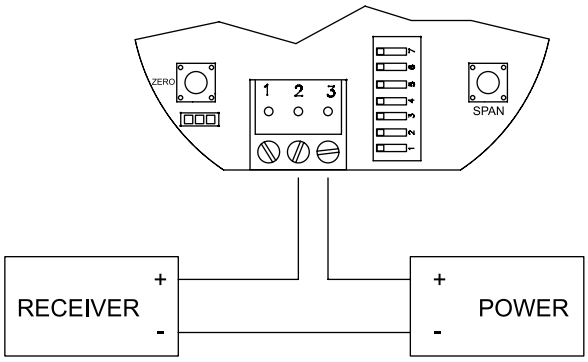

Figure 2: Current Output Wiring

The range of appropriate receiver load resistances (RL) for power supply voltage available is given by the formula listed below. Shielded 2-wire cable is recommended for control loop wiring. Ground the shield at the power supply end.

NOTICE The receiver may be connected to either the negative or positive side of the loop, whichever is most convenient. Should the polarity of the transmitter or receiver be inadvertently reversed, the loop will not function properly, but no damage will be done to the transmitter.

$$R_L = \frac{V_{PS} - 10.0}{20\ mA\ DC}$$

The maximum length of connecting wire between the transmitter and the receiver is a function of wire size and receiver resistance. That portion of the total current loop resistance represented by the resistance of the connecting wires themselves should not exceed 10% of the receiver resistance. For extremely long runs (over 1,000 ft/305 m), it is desirable to select receivers with lower resistances in order to keep the size and cost of the connecting leads as low as possible. In installations where the connecting run is no more than 100 ft (30.5 m), connecting lead wire as small as No. 22 ga. can be used.

3-Wire 0 to 10 V and 0 to 5 V Voltage Operation

CAUTION Do not exceed specified supply voltage ratings. Permanent damage not covered by warranty will result.

The connections to the transmitter are made to Terminals 1, 2, and 3 on the terminal block as shown in Figure 3. The terminal block is removable and each of the terminals are labeled underneath the terminal block on the circuit board. Polarity is indicated by 1, 2, and 3. When connecting using a DC power source, make sure the AC/DC selection jumper is set for DC. If the polarity of the transmitter is inadvertently reversed, the unit will not function properly, but no damage will be done to the transmitter. When connecting to an AC power source, make sure the AC/DC selection jumper is set for AC. Either lead of the supply power may be connected to terminals 1 and 2 without affecting the operation of the transmitter or causing damage to the transmitter.

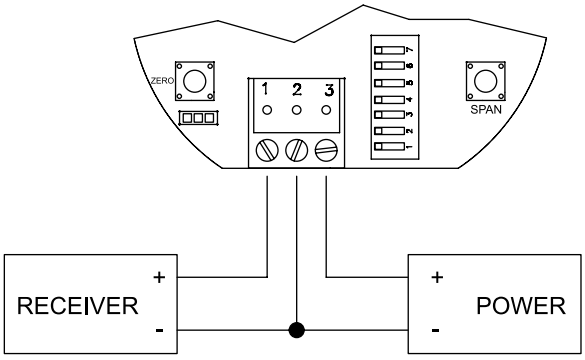

Figure 3: Voltage Output Wiring

The minimum receiver load is 1 kΩ. The resistance due to the wire should be low compared to the receiver load resistance. While the voltage at the terminal block remains unchanged with a 10 mA current flow, resistive losses in the wiring do cause errors in the voltage delivered to the receiver. For a 1% accuracy gauge, the resistance of the wires should be less than 0.1% of the value of the receiver load resistance. This will keep the error caused by the current flow below 0.1%.

Simultaneous Current and Voltage Operation

CAUTION Do not exceed specified supply voltage ratings. Permanent damage not covered by warranty will result. Simultaneous outputs are not designed for AC voltage operation.

The connections to the transmitter are made to Terminals 1, 2, and 3 on the terminal block as shown in Figure 4. The terminal block is removable and each of the terminals are labeled underneath the terminal block on the circuit board. Polarity is indicated by terminals 1, 2, and 3. The AC/DC selection jumper should be set for DC operation. The voltage output and the power supply must have separate wire leads that are only joined at terminal 2 of the transmitter. Additional error may occur for the voltage output if a single wire is used or if the wires are joined at the power supply or receiver.

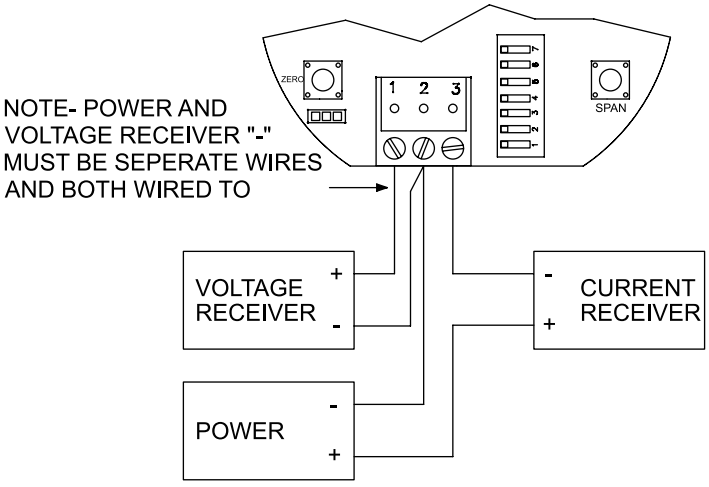

Figure 4: Simultaneous Current and Voltage Output Wiring

For the current output, the maximum allowable loop resistance (wiring + receiver resistance) is dependent on the power supply. The maximum loop voltage drop must not reduce the transmitter voltage below 17 V. The maximum loop resistance can be calculated using the following equation:

$$R_{MAX} = \frac{V_{PS} - 17.0}{20 \text{ mA DC}}$$

(where V_{PS} is the power supply voltage)

The equation uses 17.0 instead of 10.0 used in the current only equation. This represents the minimum voltage supply which is higher on the simultaneous output configuration due to the requirements of the voltage outputs.

Shielded 4-wire cable is recommended for control loop wiring. Ground the shield at the power supply end only. Should the polarity of the transmitter or receiver be inadvertently reversed, the unit will not function properly, but no damage will be done to the transmitter.

For voltage outputs, the minimum receiver load is 1 kΩ. The resistance due to the wire should be low compared to the receiver load resistance. While the voltage at the terminal block remains unchanged with a 10 mA current flow, resistive losses in the wiring do cause errors in the voltage delivered to the receiver. For a 1% accuracy gauge, the resistance of the wires should be less than 0.1% of the value of the receiver load resistance. This will keep the error caused by the current flow below 0.1%.

CALIBRATION

NOTICE There is a 5 second delay from the time the zero or span calibration button is released until the time that the change in the calibration takes place. This delay is used to prevent stress related offsets on the lower range.

Zero Calibration

The zero calibration can be set by applying zero pressure to both the pressure ports and pressing the zero button for 3 seconds. If either the remote or local LCD is present, the display will read ZEro and then sequence back to the home display.

Span Calibration

The span calibration can be adjusted only after setting the zero adjustment. It must be completed within 5 minutes of the last zero calibration. The span calibration button will be ignored until the zero calibration is completed. Apply pressure to the ports of the transmitter that are associated with the maximum output of the transmitter (20 mA, 5 V, or 10 V, depending on the output being used). Press and hold the span button for 3 seconds. If either the remote or local LCD are present, the display will read SPAn and then sequence back to the home display. If the span calibration is attempted before adjusting the zero calibration, the FAiL error message will flash on the display. On bi-directional models, separate spans can be performed on the positive and negative sides of the range.

ZERO DEADBAND

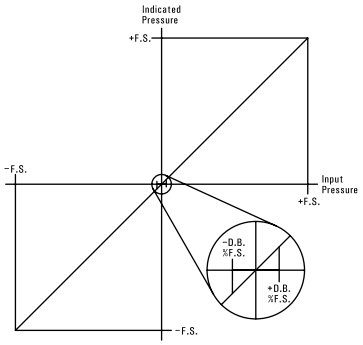

Figure 5

MAINTENANCE/REPAIR

Upon final installation of the Series 616W Differential Pressure Transmitter, no routine maintenance is required. The Series 616W is not field serviceable and is not possible to repair the unit. Field repair should not be attempted and may void warranty.

WARRANTY/RETURN

Refer to “Terms and Conditions of Sale” in our catalog and on our website. Contact customer service to receive a Return Goods Authorization number before shipping the product back for repair. Be sure to include a brief description of the problem plus any additional application notes.

©Copyright 2017 Dwyer Instruments, Inc.
Printed in U.S.A. 1/17

FR# 444343-10 Rev. 3

DWYER INSTRUMENTS, INC.
P.O. BOX 373 • MICHIGAN CITY, INDIANA 46360, U.S.A.

Phone: 219/879-8000 **www.dwyer-inst.com**
Fax: 219/872-9057 **e-mail: info@dwyermail.com**

Temperature transmitters for system enclosure, control panel, and GAC influent.
#TTW-104

Dwyer

SERIES TTW

WEATHERPROOF IMMERSION TEMPERATURE TRANSMITTER

Pt100 RTD, PC Programmable Transmitter

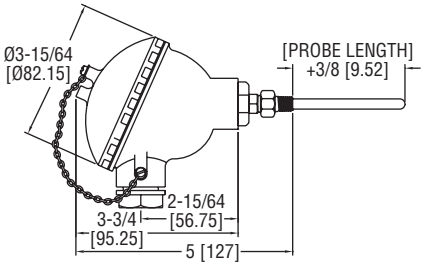

The **SERIES TTW** Immersion Temperature Transmitter offers a field adjustable temperature transmitter pre-assembled with an RTD sensor and weatherproof enclosure.

FEATURES/BENEFITS

- Preset to 32 to 212°F (0 to 100°C) output range
- USB port for easy output scale adjustment in the field

APPLICATIONS

- Immersion temperature sensing in HVAC systems

MODEL CHART	
Model	**Probe Length**
TTW-104	4″
TTW-106	6″
TTW-108	8″
TTW-112	12″
TTW-118	18″

SPECIFICATIONS	
TEMPERATURE SENSOR **Accuracy:** ±3°F (±1.7°C). **Temperature Limits:** Operating: -40 to 302°F (-40 to 150°C). **Sensor Curves:** Pt100 RTD (TE Series Curve D). **TEMPERATURE TRANSMITTER** **Input Range:** -328 to 986°F (-200 to 530°C). **Output:** Two-wire 4 to 20 mA. **Output Impedance:** 600 Ω @ 24 VDC.	**Power Requirements:** 12 to 35 VDC. **Accuracy:** ±0.2% FS. **Temperature Limits:** -40 to 185°F (-40 to 85°C). **Response Time:** <100 ms. **ENCLOSURE** **Temperature Limits:** -40 to 212°F (-40 to 100°C). **Rating:** NEMA 4X (IP65). **Material:** Painted aluminum housing.

No. A-709 RTD Transmitter Enclosure

Specifications - Installation and Operating Instructions

Shown with optional Series
RTD Temperature Transmitter

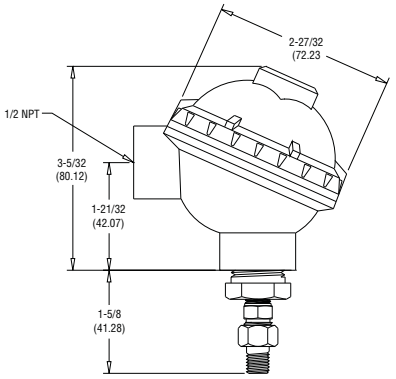

PARTS LIST
(1) Enclosure
(1) Enclosure Cover
(1) 1/8″ male NPT x 7/16-24 male Adapter
(1) 1/8″ male NPT x 7/16 female Adapter
(1) 1/2″ male NPT x 1/8″ female Bushing
(2) M4x8 Socket Cap Screws
(1) 1/4″ I.D. x 3/8″ O.D. O-ring

ENCLOSURE ASSEMBLY
1. Insert 1/2″ male NPT x 1/8″ female adapter into enclosure from bottom.

2. Place o-ring inside 7/16-24 female fitting and loosely assemble it to the 7/16-24 male x 1/8″ NPT adapter, then assemble to adapter noted in step #1 as shown in Figure 1.

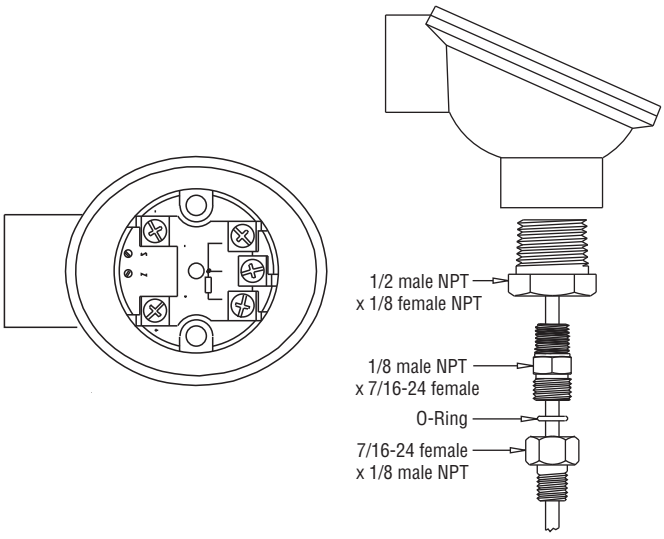

Figure 1

INSTALLING SERIES 651 RTD TRANSMITTER
1. Use M4x8 screws to attach RTD to enclosure.

2. Feed wiring through 1/2″ NPT opening.

3. Connect wiring to appropriate terminals on transmitter.

INSTALLING SERIES RTD SENSOR
1. From inside of enclosure, feed tip of RTD sensor through transmitter (if included) and fitting assembly.

2. Make sure wiring will clear all metal surfaces when cover is replaced.

3. Lock RTD sensor in place by tightening the two hex fittings outside the enclosure.

4. Use 1/8″ NPT threads to mount assembled unit in place. Optional A-345 1/8″ NPT flange includes a gasket and two self tapping screws for convenient installation on sheet metal ducts, etc.

5. Attach RTD sensor wires to transmitter terminals if it is installed within enclosure, if using a remotely located transmitter, route wiring between sensor and transmitter to inside through the 1/2″ NPT opening.

6. Replace cover and tighten screws when wiring is complete.

©Copyright 2008 Dwyer Instruments, Inc.
Printed in U.S.A. 5/08 FR# 71-440727-10

DWYER INSTRUMENTS, INC.
P.O. BOX 373 • MICHIGAN CITY, INDIANA 46361, U.S.A.
Phone: 219/879-8000 **www.dwyer-inst.com**
Fax: 219/872-9057 **e-mail: info@dwyer-inst.com**

We Measure, We Control, We Record

TxBlock-USB Transmitter

TEMPERATURE TRANSMITTER - OPERATING MANUAL – V1.0x H

INTRODUCTION

The **TxBlock-USB** is a 4-20 mA 2-wire temperature transmitter for head mount, powered by the current loop. The output current is linearized and adjusted in fuction of the input sensor type and range configured.

Its configuration is accomplished by connecting the transmitter to a PC USB port without the need of any dedicated interface. The configuration does not require that the transmitter be powered.

SPECIFICATIONS

Sensor input: User defined. The supported sensors are listed in **Table 1**, along with their maximum ranges.

Thermocouples: Types J, K, R, S, T, N, E and B accoding to IEC 60584 (ITS-90). Impedance >> 1 MΩ

Pt100: Type 3-wire, Excitation 0.8 mA, α= 0.00385, according IEC 60751 (ITS-90).
For 2-wire sensors, tie terminals 3 and 4 together.

Pt1000: Type 3-wire, Excitation 0.65 mA, α= 0.00385, according IEC 60751 (ITS-90).
For 2-wire sensors, tie terminals 3 and 4 together.

NTC $R_{25°C}$: 10 kΩ ±1 %, $B_{25/85}$ = 3435

Voltage: 0 to 50 mVdc. Impedance >> 1 MΩ

Sensor Type	Maximum Measurement Range	Minimum Measurement Range
Voltage	0 to 50 mV	5 mV
Thermocouple K	-150 to 1370 °C	100 °C
Thermocouple J	-100 to 760 °C	100 °C
Thermocouple R	-50 to 1760 °C	400 °C
Thermocouple S	-50 to 1760 °C	400 °C
Thermocouple T	-160 to 400 °C	100 °C
Thermocouple N	-270 to 1300 °C	100 °C
Thermocouple E	-90 to 720 °C	100 °C
Thermocouple B	500 to 1820 °C	400 °C
Pt100	-200 to 650 °C	40 °C
Pt1000	-200 to 650 °C	40 °C
NTC	-30 to 120°C	40 °C

Table 1 – Sensors accepted by the transmitter

Switch-on delay: < 2.5 s. The accuracy is only guaranteed after 15 min.

Terms of reference: ambient: 25 ° C; voltage: 24 Vdc, load: 250 Ω; settling time: 10 minutes.

Temperature Effect: < ±0.16 % / 25 °C

Response time: typical 1.6 s.

Maximum voltage allowed at input terminals no sensor: 3 V.

RTD current: 800 μA.

RTD cable resistance effect: 0.005 °C / Ω

Maximum allowable cable resistance for RTD: 25 Ω.

Sensor Type	Typical Accuracy	Minimun Accuracy
Pt100 / Pt1000 (-150 to 400 °C)	0.10 %	0.12 %
Pt100 / Pt1000 (-200 to 650 °C)	0.13 %	0.19 %
mV, K, J, T, E, N, R, S, B	0.1 % (*)	0.15 % (*)
NTC	0.3 °C	0.7 °C

Table 2 – Calibration error, percentage of the full measurement range

(*) Add cold junction compensation: < ± 1 °C.

Power supply influence: 0.006 % / V typical (percentage of the full measure range).

Output: 4-20 mA or 20-4 mA current, 2-wired; linear in relation to the temperature measurement by the selected sensor.

Output Resolution: 2 μA.

Power supply: 10 to 35 Vdc, across the transmitter;

Maximum load (RL): RL (max.) = (Vdc – 10) / 0.02 [Ω]
Where: Vdc= Power supply voltage (10-35 Vdc)

Operating Temperature: -40 to 85 °C

Humidity: 0 to 90 % RH

Electromagnetic Compatibility: EN 61326-1:2006

No electrical isolation between input and output.

Internal protection against polarity inversion.

Cold junction compensation for thermocouples.

Dimensions: 43.5 mm (diameter) x 20.5 mm (height)

Connection Wire Cross Section: 0.14 a 1.5 mm²

Screw Tightening: 0.8 Nm.

Housing: ABS UL94-HB.

CONFIGURATION

When the trasmitter is used with the factory setting, no further action is required and the transmitter is ready to be installed. Changes to the configuration are possible through the **TxConfig II** software, provided free of charge.

The **TxBlock-USB** Setup Kit consisting of the Txconfig II software and USB cable can be purchased from the manufacturer or any authorized distributor. The Txconfig II software is continuously updated and new versions can be downloaded at no charge from the manufacturer's website. To install, execute the ***TxConfigIISetup.exe*** file and follow the instructions.

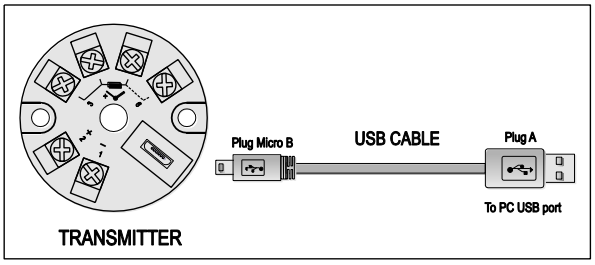

Fig. 1 – USB cable connection

During the setup, the transmitter is powered by the USB, not requiring an external power supply.

The transmitter setup can also be made by connecting it to the loop, using the *loop* power supply. There is no electrical insulation between the transmitter and the communication port (interface), therefore it is not recommended to configure it with the sensor inlet connected to the process. See **Fig. 2**.

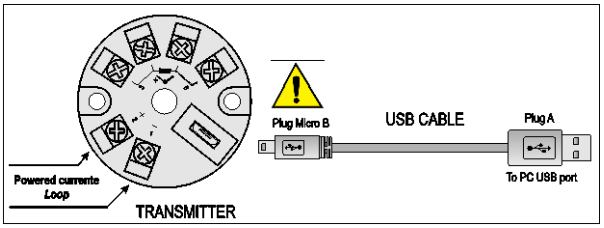

Fig. 2 – USB cable connections – *Loop* powered

After these connections, the user must run the ***TxConfig II*** software and, if necessary, consult the *Help* topic to help using the software.

⚠	**The USB communication port (interface) of the TxBlock-USB is not electrically insulated from the transmitter's input.**

SOFTWARE CONFIGURATION:

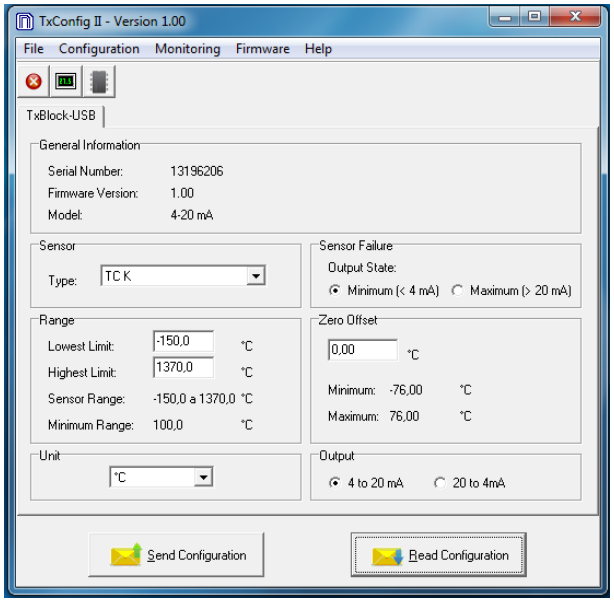

Fig. 3 – ***TxConfig II*** software main screen

The fields in the screen mean:

1. **General Information**: This field shows information that identifying the transmitter. This information should be sent to the manufacturer in an eventual request for technical assistance.
2. **Sensor**: Select the type of sensor to be used. See **Table 1**.
3. **Measuring Range**: Sets de measurement range of the transmitter.

   Lower Range Limit: equivalent temperature for a current of 4 mA.

   Upper Range Limit: equivalent temperature for a current of 20 mA.

   Sensor Range

   The values chosen cannot exceed the **range of sensor** shown in this field. See **Table 1** of this manual.

   Minimum Range

   Do not set a lower band (span) that the **Minimum Range** indicated below in this same field. See **Table 1** of this manual.
4. **Sensor Failure**: It establishes the output behavior, when the transmitter indicates a failure:

   Minimum: output current goes to < 3.6 mA (down-scale), typically used for refrigeration.

   Maximum: output current goes to > 22.0 mA (up-scale), typically used for heating.
5. **Zero Correction**: It corrects small deviations presented in the transmitter output, for example, when the sensor is replaced.
6. **Send Configuration**: It applies the new setup. Once sent, the setup will be immediately adopted by the transmitter.
7. **Read Configuration**: Reads the current setup in the transmitter connected. The screen now presents the current setup that may be changed by the user.

FACTORY SETTING:

- Sensor: Pt100 3-wire, range 0 to 100 °C
- Sensor failure: upscale (maximum).
- 0 °C zero correction.
- Unit: °C;
- Output: 4-20 mA.

Upon purchase order, the user can define a specific setup.

MECHANICAL INSTALLATION

The **TxBlock-USB** transmitter is suitable to be installed in heads. Vibrations, moisture and extreme temperatures, electro-magnetic interference, high voltage and other interferences can permanently damage the unit, and could cause error in the measured value.

DIMENSIONS:

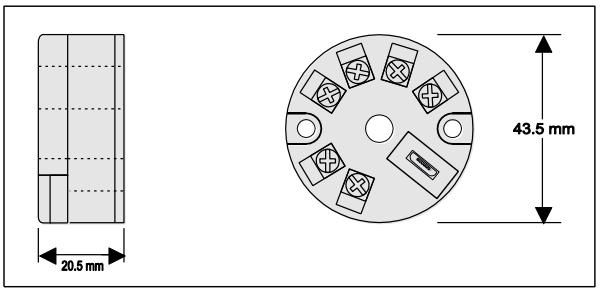

Fig. 4 – Transmitter dimensions

ELECTRICAL INSTALLATION

- Section of the cable used: 0.14 to 1.5 mm ²
- Recommended torque in the terminal: 0.8 Nm.

RECOMMENDATIONS FOR INSTALLATION

- Sensor signals conductors must go through the plant system separate from power leads (loop), if possible in grounded conduits.
- The instruments must be powered from the instrumentation power supply circuit.
- In control and monitoring applications is essential to consider what can happen when any part of the system fails.
- It is recommended the use of suppressors in contact coils, solenoids and any inductive load.

ELECTRICAL CONNECTIONS

The figures below show the electrical connections required. The terminals 3, 4, 5 and 6 are dedicated to the sensor connection. **LOAD** represents the 4-20 mA current measuring device (indicator, controller, recorder, etc.).

PT100 2-WIRE

Note: When the Pt100 2-wire the terminals 3 and 4 must be interconnected, according to the figure below.

The Pt100 wire length **should be less than 30 cm** to maintain the measurement error within specifications (electrical resistance).

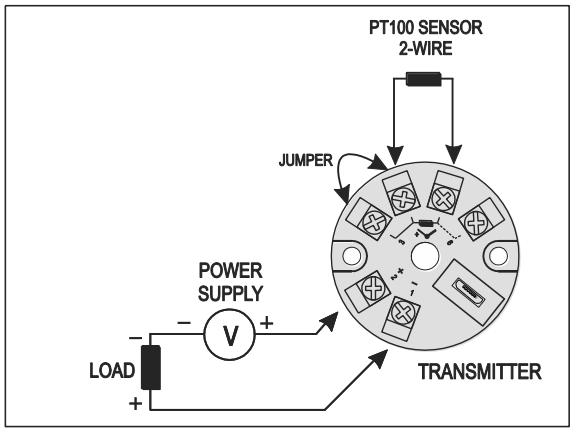

Fig. 5 – Transmitter electrical connections (Pt100 2-wire)

PT100 3-WIRE

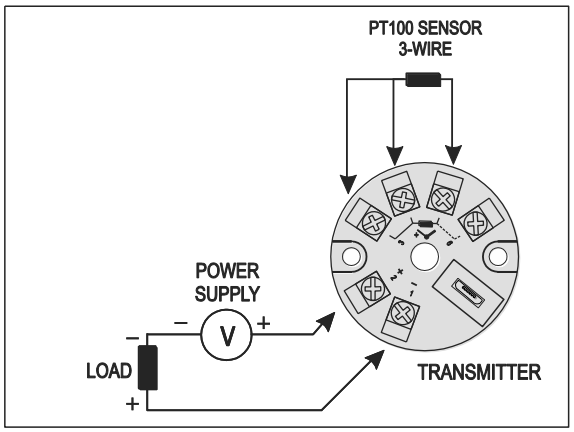

Fig. 6 – Transmitter electrical connections (Pt100 3-wire)

PT100 4-WIRE

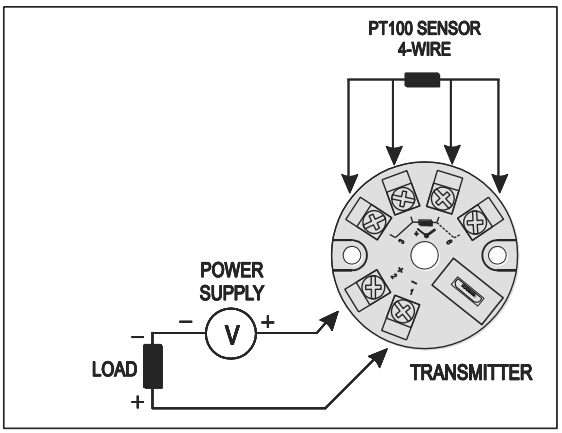

Fig. 7 – Transmitter electrical connections (Pt100 4-wire)

Pt1000 3-wire / Pt100 3-wire and 4-wire: For appropriate cable resistance compensation they should be equal for all legs. Maximum wire resistance is 25 Ω per wire leg. Usage of a 3 or 4 wire with conductors of equal length and gauge is recommended.

NTC 2-WIRE

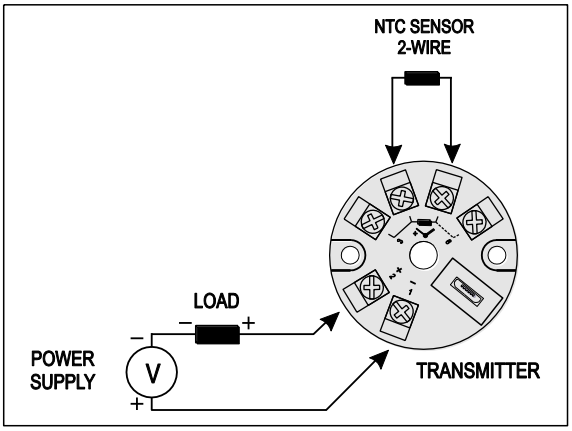

Fig. 8 – Transmitter electrical connections (NTC 2-wire)

THERMOCOUPLES

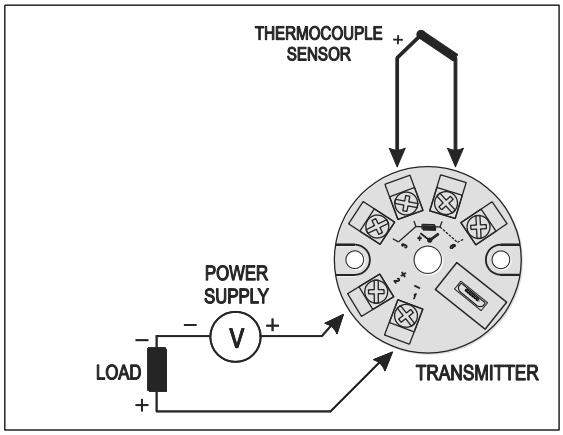

Fig. 9 – Transmitter electrical connections (Thermocouple)

VOLTAGE (0-50 mV)

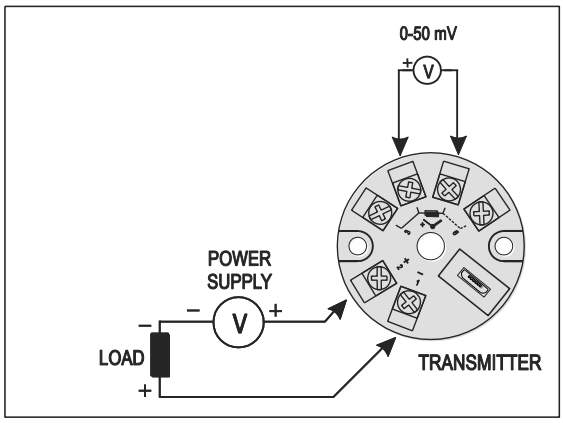

Fig. 10 – Transmitter electrical connections (0-50 mV)

OPERATION

The sensor offset can be changed through the ***TxConfig II*** software. The USB cable may be connected to the transmitter without causing any measurement errors. See item *Zero Correction* in the chapter **CONFIGURATION** of this manual.

The uer must choose the most suitable sensor and range to the process. The chosen range must not exceed the maximum range of measurement defined for the sensor and should not be smaller than the minimum range for the same sensor.

It is important to note that the transmitter accuracy is based on the maximum range of the sensor used, even when a narrower range is programmed.

Example:

- The Pt100 sensor in the range 0 to 100 °C and accuracy of 0.12 %, the maximum error will be 1.02 °C (0.12 % de 850 °C).
- The Pt100 sensor in the range 500 to 600 °C and accuracy of 0.19 %, the maximum error will be 1.61 °C (0.19 % of the 850 °C).

Note: When measurements are made at the transmitter, see if the Pt100 excitation current required by the calibrator is compatible with the Pt100 excitation current used in the transmitter: 0.8 mA.

SAFETY INFORMATION

Any control system design should take into account that any part of the system has the potential to fail. This product is not a protection or safety device and its alarms are not intended to protect against product failures. Independent safety devices should be always provided if personnel or property are at risk.

Product performance and specifications may be affected by its environment and installation. It's user's responsibility to assure proper grounding, shielding, cable routing and electrical noise filtering, in accordance with local regulations, EMC standards and good installation practices.

SUPPORT AND MAINTENANCE

This product contains no serviceable parts inside. Contact our local distributor in case you need authorized service. For troubleshooting, visit our FAQ at www.novusautomation.com.

LIMITED WARRANTY AND LIMITATION OF LIABILITY

NOVUS warrants to the original purchaser that this product is free from defects in material and workmanship under normal use and service within one (1) year from the date of shipment from factory or from its official sales channel to the original purchaser.

NOVUS liability under this warranty shall not in any case exceed the cost of correcting defects in the product or of supplying replacement product as herein provided and upon the expiration of the warranty period all such liability shall terminate.

For complete information on warranty and liability limitations, check appropriate section in our web site: www.novusautomation.com/warranty.

Bimetal Thermometer
Model TI.20, All Stainless Steel Construction

Application

- Suitable fluid medium which does not corrode 304 stainless steel

Special features

- Back connection without external reset
- Industrial design
- All Stainless steel construction

Thermometer TI.20

Standard version

Size
2" (50.8 mm) - Type TI.20

Accuracy
± 1.0% full scale value (ASME B40.3)

Min. / Max. Ranges
-100 °F to 1000 °F (and equivalent Celsius)

Working Range
Steady: full scale value
Short time: 110% of full scale value

Under / Over Range Protection
Temporary over or under range tolerance of 50% of scale up to 500 °F (260°C). For ranges above 500°F, maximum over range is 800°F; continous. 1000°F intermittent.

Connection
Material: 304 stainless steel
Center back mount (CBM)
¼" NPT

Stem
Material: 304 stainless steel
Diameter: ¼" (6.35 mm)
Length: 2 ½" to 24" (63.5 mm to 609.6 mm)

Measuring Element
Bi-metal helix

Case
Material: 304 stainless steel; hermetically sealed per ASME B40.3 standard

Dial
White aluminum, dished, with black markings

Pointer
Black aluminum

Standard Scales
Single: Fahrenheit or Celsius
Dual: Fahrenheit (outer) and Celsius (inner)

Window
Flat instrument glass

Weight
2" - 5 oz.; Add 1 oz. for every 2" of stem length

Dampening
Inert gel to minimize pointer oscillation

Order Options (min. order may apply)
Special scales and dial markings; Acrylic windows
Calibration certification traceable to NIST

Warranty
Limited one year warranty as stated in WIKA's Terms & Conditions of Sale.

WIKA
Part of your business

STANDARD RANGES		
Fahrenheit Single Scale	Dual Scale F & C F Outer, C Inner	Celsius Single Scale
-100/150 F	-100/150 F & -70/70 C	-50/50 C
-40/120 F-	40/120 F & -40/50 C	-20/120 C
0/140 F	0/140 F & -20/60 C	0/50 C
0/200 F	0/200 F & -15/90 C	0/100 C
0/250 F	0/250 F & -20/120 C	0/150 C
20/240 F	20/240 F & -5/115 C	0/200 C
25/125 F	25/125 F & -5/50 C[1]	0/250 C
50/300 F	50/300 F & 10/150 C	0/300 C
50/400 F	50/400 F & 10/200 C	0/450 C[1]
50/550 F	50/500 F & 10/260 C	100/550 C[1]
150/750 F	150/750 F & 65/400 C	
200/1000 F[1]	200/1000 F & 100/540 C[1]	

[1]Not recommended for continous service over 800°F (425°C)

Dimensions

Standard versions

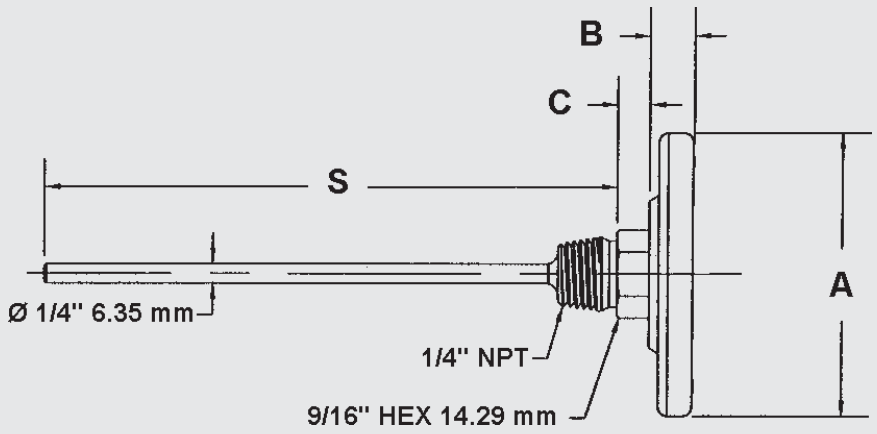

WIKA TYPE	DIAL SIZE	A	B	C	S (Stem Length)
20	2" (50.8 mm)	2- 1/16" (52.4 mm)	7/16" (11.1 mm)	1/4" (6.4 mm)	As Specified

STEM LENGTH
2½" (63.5 mm)
4" (101.6 mm)
6" (152.4 mm)
9" (228.6 mm)
12" (304.8 mm)
15" (381.0 mm)
18" (457.2 mm)
24" (609.6 mm)

Note: Thermowells for temperature instruments are recommended for all process systems where pressure, velocity, or viscous, abrasive and corrosive materials are present individually or in combination. A properly selected thermowell protects the temperature instrument from possible damage resulting from these process variables. Furthermore, a thermowell permits removal of the temperature instrument for replacement, repair or testing without effecting the process media or the system.

Ordering information
State computer part number (if available) /type number/size/range/connection size and locations/options required. WIKA reserves the right to make changes without prior notice.

WIKA Instrument Corporation
1000 Wiegand Boulevard
Lawrenceville, GA 30043
1-888-WIKA-USA /770-513-8200 (in GA)
Fax 770-338-5118
info@wika.com www.wika.com

SVE Manifold Flow Meters #FR5A75PL

Series FR5500 Acrylic Flowmeters

KEY INSTRUMENTS

250 Andrews Road, Trevose, PA 19053

800.356.7483 • 215.357.0893
Fax:215.357.9239

www.keyinstruments.com
e-mail:sales@keyinstruments.com

SERIES FR5500 ACRYLIC FLOWMETERS

SPECIFICATIONS	
ACCURACY	+/-5% OF FULL SCALE
METER BODY	MACHINED ACRYLIC METERING TUBE
FLOAT	STAINLESS STEEL
FITTINGS	1-1/2" OR 2" FNPT UNION FITTINGS MADE OF PVC OR STAINLESS STEEL
O-RINGS	VITON®
PRESSURE	100 PSIG MAXIMUM OPERATING PRESSURE
TEMPERATURE	150°F/65°C MAXIMUM OPERATING TEMPERATURE

FEATURES

- Easy-to-read scales for GPM or LPM H_20 and SCFM or LPM air
- Durable one-piece clear acrylic construction
- Stable, easy-to-read stainless steel floats
- Integrated union fittings for easy installation
- PVC or stainless steel fitting options
- Easy disassembly and assembly for maintenance
- Superior quality

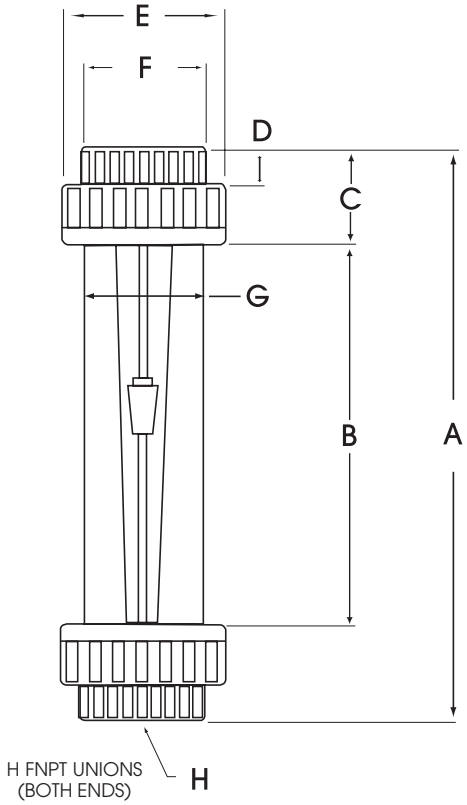

SERIES FR5500 FLOW RATES- 1-1/2" MODELS			
Model	SCFM AIR*	Model	LPM AIR*
5A75	10-110	5A87	300-3000
5A76	15-160	5A88	450-4600
5A77	20-200	5A89	550-5500
Model	GPM H_2O	Model	LPM H_2O
5L78	3-30	5L90	10-120
5L79	4-40	5L91	15-150
5L80	5-50	5L92	20-200

*Air Ranges-Stainless Steel Fittings Only

SERIES FR5500 FLOW RATES- 2" MODELS			
Model	SCFM AIR*	Model	LPM AIR*
5A81	25-250	5A93	700-7000
5A82	30-330	5A94	800-9000
5A83	40-400	5A95	1000-11000
Model	GPM H_2O	Model	LPM H_2O
5L84	6-60	5L96	25-230
5L85	8-80	5L97	30-300
5L86	10-100	5L98	40-400

VITON® IS A REGISTERED TRADEMARK of E.I. DUPONT.

ORDERING EXAMPLE

FR	MODEL CODE	FITTINGS
	5A81	SI

SAMPLE: FR5A81SI
25-250 SCFM AIR with 2" SI UNIONS

FITTINGS:
PI=PVC
SI=Stainless steel

	FR5500 Dimensions Inches						
H	A	B	C	D	E	F	G
1-1/2" PVC	13-1/4	9	2-1/4	7/8	3-1/2	2-1/2	2-1/2
1-1/2" S.S.	13-3/8	9-1/8	2-1/8	7/8	3-1/2	2-1/2	2-1/2
2" PVC	13-7/8	8-15/16	2-1/2	1	4-1/8	3-1/16	3
2" S.S.	13-1/2	9-3/16	2-5/32	15/16	4	3	3

KEY INSTRUMENTS

250 Andrews Road, Trevose, PA 19053

800.356.7483 • 215.357.0893
Fax:215.357.9239

www.keyinstruments.com
e-mail:sales@keyinstruments.com

Sept. 2001

Total System Flow Meter #FM40C450Q

Measurement Accessories

Blower Connection Key
NPT – American National Standard Taper Pipe Thread (Male)
NPSC – American National Standard Straight Pipe Thread for Coupling (Female)
SO – Slip On (Smooth – No Threads)

Air Flow Meter

FEATURES

- Direct reading in SCFM
- Low pressure drop (2-4" typical) across the flow meter
- Non-clogging, low impedance air stream
- Light weight aluminum
- No moving parts
- Large easy-to-read dial
- Accurate within 2% at standard conditions
- Good repeatability
- Available in 2", 3" and 4" sizes
- Factory configured for quick installation
- .048" Allen key supplied for gauge adjustment

OPTIONS

- Corrosion-resistant version with Chem-Tough™ or in stainless steel
- FDA-approved Food Tough™ surface conversion

BENEFITS

- OPTIMIZE SYSTEM EFFICIENCY
  Measuring the correct air flow can assist you in fine-tuning to your system's optimal efficiency.
- BALANCE MULTI-PIPING SYSTEMS
  When evacuating CFM from more than one pipe, different run lengths or end system impedance can cause one pipe to handle more CFM than the other. With an accurate CFM reading, piping can be balanced by bleeding air in/out or by creating an extra impedance.
- DETECT CHANNELING OR PLUGGING
  For systems in which channeling or plugging can occur, a change in the CFM measured can help indicate the unseen changes in your system.

Current Models		Flow Range (SCFM)	B Threads	C Length	D Width	E	F
Model	Part #						
FM20C030Q	550599	6-30	2" - 11.5 NPSC	7.18"	7.0"	2.0"	3.75"
FM20C045Q	550600	9-45					
FM20C065Q	550601	13-65					
FM20C125Q	550602	25-125			5.6"		
FM20C175Q	550603	35-175					
FM20C225Q	550604	45-225					
FM30C250Q	550605	50-250	3" - 8 NPSC	7.52"	7.4"	2.5"	4.43"
FM30C350Q	550606	70-350					
FM30C475Q	550607	95-475					
FM40C450Q	550608	90-450	4" - 8 NPSC	8.00"	7.7"	2.7"	5.43"
FM40C600Q	550609	120-600					
FM40C850Q	550610	170-850					

Rev. 2/04

SectionG 2004.qxd 6/26/04 12:19 PM Page G-6

Blower Model Reference Key	
A = SPIRAL	E = DR/EN/CP 656, 6, 623, S7
B = DR/EN/CP 068, 083, 101, 202	F = DR/EN/CP 707, 808, 858, S9, P9 (Inlet Only)
C = DR/EN/CP 303, 312, 313, 353	G = DR/EN/CP 823, S13, P13 (Inlet Only)
D = DR/EN/CP 404, 454, 513, 505, 555, 523	H = DR/EN/CP 909, 979, 1223, 14, S15, P15 (Inlet Only)

Measurement Accessories

TYPICAL FLOW METER ARRANGEMENT

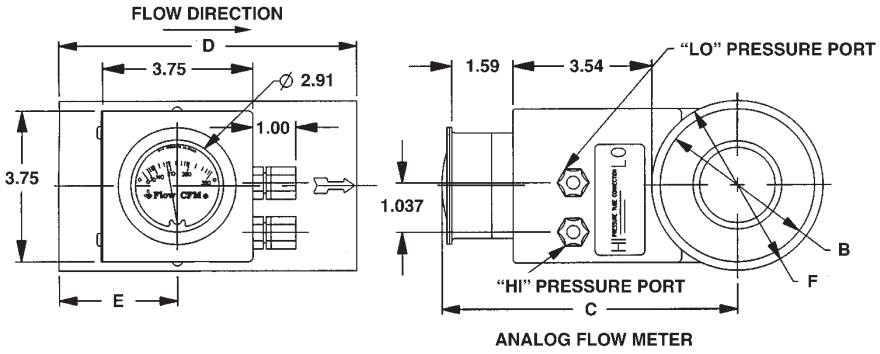

ANALOG FLOW METER

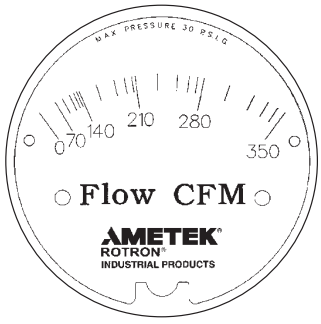

TYPICAL GAUGE FACE

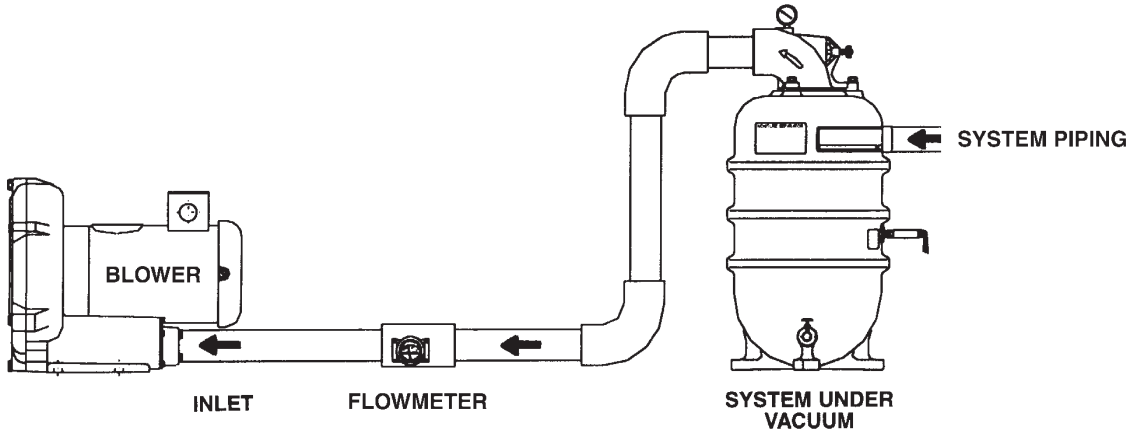

HIGH TEMPERATURE/PRESSURE CORRECTION

$$SCFM_2 = \frac{SCFM_1}{\sqrt{\left(\frac{14.7}{Pf_2}\right) \times \left(\frac{530}{Tf_2 + 460}\right)}}$$

Pf_2 = Absolute Pressure in PSIA

Tf_2 = Temperature in °F

- Use on inlet to limit need to correct for high pressure or elevated outlet temperature
- Standard model limits = 140°F and 30 PSIG

HOW IT WORKS

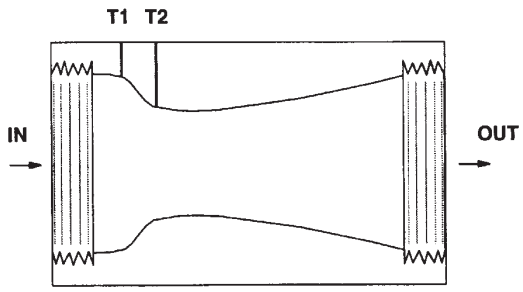

Rotron's flow meter is a venturi style design. After air enters the inlet, the pressure is measured in the T1 tap. The second tap, T2, measures the pressure at the throat. The differential between T1 and T2 registers across a special calibrated CFM gauge to provide accurate readings. The throat is then expanded back to the original size to keep pressure loss to under 2-4 IWG.

OPERATION & MAINTENANCE MANUAL

ROTRON® INDUSTRIAL PRODUCTS
75 North Street, Saugerties, NY 12477 U.S.A.
Telephone: 845 -246-3401 Fax: 845-246-3802
e-mail: rotronindustrial@ametek.com website: www.rotronindustrial.com

Air Flow Meter

Thank you for purchasing an AMETEK Rotron Flow Meter. When matched with the correct Rotron blower, and properly installed and maintained, this meter will quickly and accurately measure the pipe flow. To ensure good results, please take the time to read these instructions before starting the installation of your air flow meter.

Sizing for Optimal Efficiency

Current Models		Flow Range (SCFM)	Threads	Length	Width	Gauge Part #	Body Style	Prior Models	
Model	Part #							Model	Part #
FM20C030Q	550599	6-30	2.0" 11.5 NPSC	6.94"	5.49"	550321	A	FM20A030Q	550312
FM20C045Q	550600	9-45				550322		FM20A045Q	550313
FM20C065Q	550601	13-65				550323		FM20A065Q	550314
FM20C125Q	550602	25-125	2.0" 11.5 NPSC	5.34"	5.49"	550290	B	FM20A125Q	550256
FM20C175Q	550603	35-175				550291		FM20A175Q	550255
FM20C225Q	550604	45-225				550292		FM20A225Q	550254
FM30C250Q	550605	50-250	3.0" 8.0 NPSC	7.38"	7.62"	550293	C	FM30A250Q	550259
FM30C350Q	550606	70-350				550294		FM30A350Q	550258
FM30C475Q	550607	95-475				550295		FM30A475Q	550257
FM40C450Q	550608	90-450	4.0" 8.0 NPSC	7.68"	8.62"	550296	D	FM40A450Q	550262
FM40C600Q	550609	120-600				550297		FM40A600Q	550261
FM40C850Q	550610	170-850				550298		FM40A850Q	550260

Installation

1. **Piping** – The flow meter should be installed horizontally on the inlet side of the blower. Since this device is directional, please observe the flow direction arrow. Rotron suggests using a length of straight pipe equivalent to three to five pipe diameters prior to the meter for any elbows, valves, etc., unless there is a tee. If there is a tee, the suggested equivalent length is eight to ten pipe diameters. The flow meter should have two pipe diameters of straight pipe after the flow exits the meter before any elbows, tees, valves, etc.

2. **Continuous Service** – Moisture and debris should not be allowed to enter the tubes leading into the gauge, as it may affect the gauge. Orient the gauge between 10 o'clock and 2 o'clock when viewed from end. (See Figure 1).

   If the gauge does not read zero, gently press down on gauge cover while turning counterclockwise to remove cover. Zero the gauge with the Allen wrench and reattach cover.

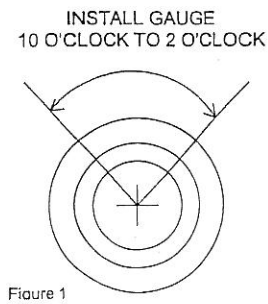

Figure 1

3. Interchangeability – Gauges within a body style are interchangeable to better match your systems actual flow rate to the Gauge Scale. For example:

Body Style	*Gauges Available*	*Flow Range Available*
A	550599	6-30 SCFM
A	550600	9-45 SCFM
A	550601	13-65 SCFM

Similar options for each body style are available **Gauges** may be purchased separately and field installed without removing the flow meter from the piping.

Typical Arrangement

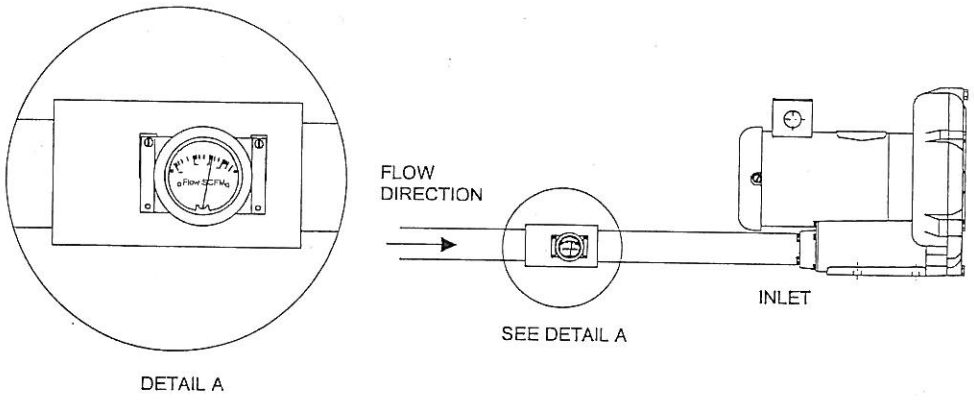

Operation

Rotron's Flow Meter is a venturi style design. After air enters the inlet, the pressure is measured in the high-pressure tap. The second tap measures the pressure at the throat. The differential between the taps registers across a specially calibrated gauge to provide accurate readings. The throat is then expanded back to the original size to keep pressure loss to under 2-4 IWG.

Maintenance

This air flow meter has been designed to require minimal maintenance. During normal operation, little maintenance is required. Care should be taken to ensure no debris enters the meter.

If the tubes become plugged, remove and clean. Do not switch the low and high hoses. Note proper orientation of hoses.

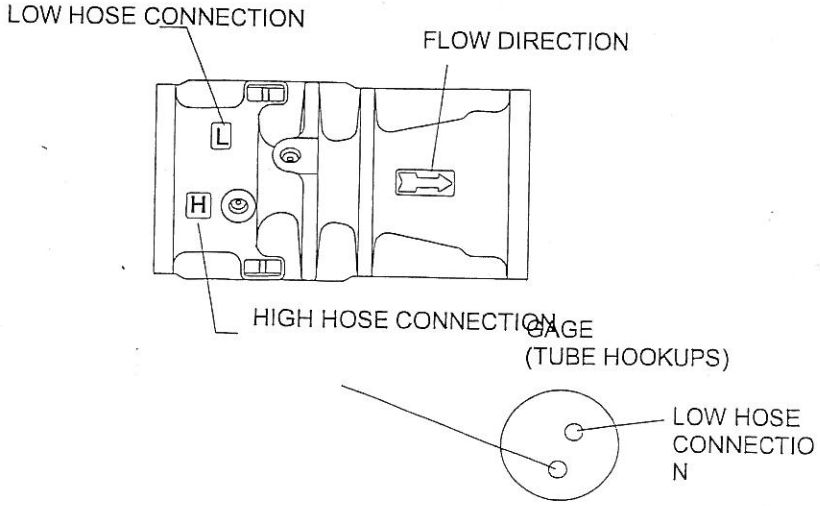

Bourdon Tube Pressure Gauges
Dry or Liquid Filled Gauge with SAE Connection
Type 212.53S - Dry Case
Type 213.53S - Liquid-filled Case

Applications

- Intended for adverse service conditions where pulsating or vibration exists (with liquid filling)
- Hydraulics & compressors
- Suitable for gaseous or liquid media that will not obstruct the pressure system

Special features

- Vibration and shock resistant (with liquid filling)
- 7/16” -20 SAE connection
- Pressure ranges up to 15,000 psi

Bourdon Tube Pressure Gauge Model 213.53S

Description

Design
ASME B40.100 & EN 837-1

Sizes
2½” (63 mm)

Accuracy class
± 2/1/2% of span (ASME B40.100 Grade A)

Ranges
Vacuum / Compound to 200 psi
Pressure from 15 psi to 15,000 psi
or other equivalent units of pressure or vacuum

Working pressure
Steady: 3/4 scale value
Fluctuating: 2/3 full scale value
Short time: full scale value

Operating temperature
Ambient: -40°F to +140°F (-40°C to +60°C) - dry
-4°F to +140°F (-20°C to +60°C) - glycerine filled
-40°F to +140°F (-40°C to +60°C) - silicone filled
Medium: +140°F (+60°C) maximum

Temperature error
Additional error when temperature changes from reference temperature of 68°F (20°C) ±0.4% for every 18°F (10°C) rising or falling. Percentage of span.

Weather protection
Weather tight (NEMA 4X / IP 65)

Pressure connection
Material: copper alloy
Lower mount (LM)
7/16” - 20 SAE with o-ring, washer and lock nut

Bourdon tube
Material: copper alloy
≤ 1,000 PSI: C-type
≥ 1,500 PSI: helical type

Movement
Copper alloy

Dial
White ABS with stop pin and with black lettering

Pointer
Black aluminum

WIKA
Part of your business

Case
304 stainless steel with vent plug and stainless steel crimp ring. Suitable for liquid filling. Case connection sealed with EPDM o-ring (glycerine filled) or Viton o-ring (dry or silicone filled).

Window
Polycarbonate with Buna-N gasket

Case fill
Glycerine 99.7% - Type 213.53S

Optional extras
- Brass restrictor
- External zero adjustment (2½" only)
- Red drag pointer or mark pointer
- Silicone or Fluorolube case filling
- Custom dial layout
- Other pressure scales available
  bar, kPa, MPa, kg/cm² and dual scales

Dimensions

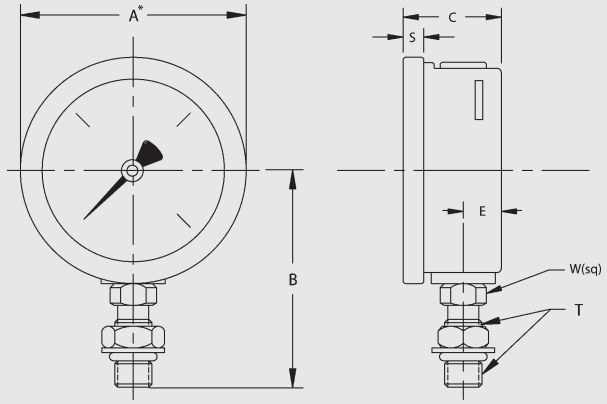

Size		A	B	C	E	S	T	W	Weight
2.5"	mm	69	61.2	31	13	6		14	0.38 lb. dry
	in	2.69	2.41	1.23	0.51	0.24	7/16-20	0.55	0.46 lb. filled

Ordering information
Pressure gauge model / Nominal size / Scale range / Size of connection / Optional extras required
Specifications and dimensions given in this leaflet represent the state of engineering at the time of printing.
Modifications may take place and materials specified may be replaced by others without prior notice.

WIKA Instrument Corporation
1000 Wiegand Boulevard
Lawrenceville, GA 30045
Tel (770) 513-8200 Toll-free 1-888-WIKA-USA
Fax (770) 338-5118
E-Mail info@wika.com
www.wika.com

3. Heating/Ventilation/Lighting

EnviroTrac

Dayton®

Utility Shutter-Mounted Exhaust Fans

Models: 1HKL9C, 1HLA1C, 1HLA2C, 1HLA3C, 1HLA4C, 1HLA5C, 1HLA7C, 1HLA8C, 1HLA9C, 1HLB1C, 1HLB2C, 1HLB3C, 1HLB4C, 1HLB5C and 1HLB6C

Dayton®

PLEASE READ AND SAVE THESE INSTRUCTIONS. READ CAREFULLY BEFORE ATTEMPTING TO ASSEMBLE, INSTALL, OPERATE OR MAINTAIN THE PRODUCT DESCRIBED.

PROTECT YOURSELF AND OTHERS BY OBSERVING ALL SAFETY INFORMATION. FAILURE TO COMPLY WITH INSTRUCTIONS COULD RESULT IN PERSONAL INJURY AND/OR PROPERTY DAMAGE! RETAIN INSTRUCTIONS FOR FUTURE REFERENCE.

PLEASE REFER TO BACK COVER FOR INFORMATION REGARDING DAYTON'S WARRANTY AND OTHER IMPORTANT INFORMATION.

Model #: _____

Serial #: _____

Purch. Date: _____

Form 5S7662 / Printed in China
PUC200 Version 1 06/2015
© 2015 Dayton Electric Manufacturing Co.
All Rights Reserved

BEFORE YOU BEGIN

⚠ WARNING ***Installation, troubleshooting and parts replacement are to be performed only by qualified personnel.***

Electrical Requirements:

- The motor amperage and voltage ratings must be checked for compatibility to supply voltage prior to final electrical connection. Please refer to the motor's nameplate label.

  Wiring must conform to local and national codes.

Tools / Materials Needed:

- Mounting Fasteners (8)
- Sealant or Caulk
- Regular Screw Driver Set

Recommended Accessories:

- Speed control (48C172) for 1HKL9C, 1HLA1C, 1HLA2C, 1HLA3C, 1HLA4C, 1HLA9C & 1HLB3C. 2 - Speed Fan Switch(1DGZ9) for 1HLB1C.

UNPACKING

Contents:

- Dayton® Utility Shutter-Mounted Exhaust Fans(1)
- Operating Instructions and Parts Manual (1)

Inspect:

- After unpacking unit, inspect carefully for any damage that may have occurred during transit. Check for loose, missing, or damaged parts. Shipping damage claim must be filed with carrier.
- Check all bolts, screws, set-screws, etc. for looseness that may have occurred during transit. Retighten as required. Rotate propeller by hand to be sure it turns freely.

- **See General Safety Instructions on page 4, and Cautions and Warnings as shown.**

Dayton®

GENERAL SAFETY INSTRUCTIONS

Fans are UL/cUL Listed, Standard 705.

⚠ DANGER ***Do not depend on any switch as the sole means of disconnecting power when installing or servicing the fan. Always disconnect, lock-out and tag-out power source before installing or servicing. Failure to disconnect power source can result in fire, shock or serious injury. Motor will restart without warning after thermal protector trips. Do not touch operating motor, it may be hot enough to cause injury.***

⚠ DANGER ***Do not place body parts or objects in fan or motor openings while motor is connected to the power source.***

⚠ CAUTION ***All electrical connections should be made by a qualified electrician.***

⚠ WARNING ***These utility exhaust fans are for general purpose exhaust applications only. Do not use these exhaust fans in explosive or corrosive atmospheres.***

1. Follow all local electrical and safety codes in the United States and Canada, as well as the National Electrical Code (NEC) and the Occupational Safety and Health Act (OSHA) in the United States, and the Canadian Electric Code (CEC) in Canada.
2. Always disconnect power source before working on or near a motor or its connected load.
3. Protect the power cable from coming in contact with sharp objects.
4. Do not kink or create tight bends in the power cable and never allow the cable to come in contact with oil, grease, hot surfaces, or chemicals.
5. Make certain that the power source conforms to the requirements of your specific exhaust fan model.
6. The fan frame and motor must be electrically grounded to a suitable electrical ground, such as a grounded water pipe or ground wire system.

⚠ CAUTION ***To reduce the risk of injury to persons, observe the following:***

In United States to reduce the risk of injury to persons, OSHA complying guards are required when fan is installed within 7 feet of floor or working level.

In Canada to reduce the risk of injury to persons, CSA complying guards are required when fan is installed below 2.5 meters (8.2 feet) above floor or grade level.

GENERAL SPECIFICATIONS

Power source	115V, 60Hz
Mounting Position	Vertical
Frame Material	Galvanized Steel
Shutter Blade Material	Aluminum Alloy
Propeller Material	Aluminum Alloy and Galvanized Steel
Agency Compliance	UL/cUL 705

Dimensions(Inches)

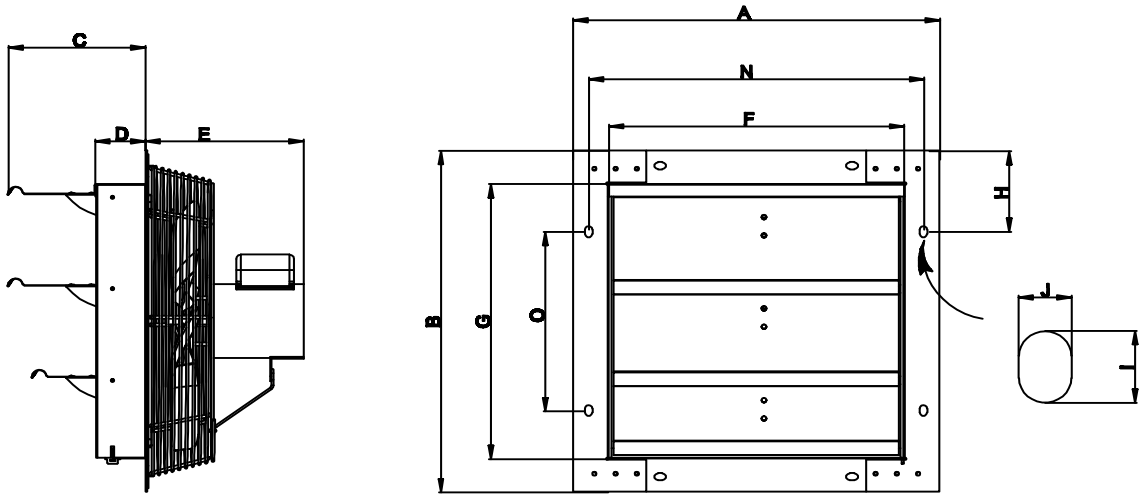

Figure 1

MODEL	Prop. Dia.	A	B	C	D	E	N	G	F	O	H	J	I	Suggested wall opening (Sq)
1HKL9C	7”	11”	11”	5 3/4”	2”	5 7/8”	9 21/32”	8 1/8”	8 1/8”	4 1/16”	3 17/32”	9/32”	1/2”	8 1/2"
1HLA1C	10”	13”	13”	4 17/32”	2”	5 7/8”	11 21/32”	10 1/8”	10 1/8”	6”	3 17/32”	9/32”	1/2”	10 1/2"
1HLA2C	12”	15”	15”	5 3/4”	2”	6 5/32”	13 5/8”	12 1/8”	12 1/8”	8”	3 1/2”	9/32”	1/2”	13”
1HLA3C	16”	18 29/32”	18 29/32”	5 3/4”	2”	7 7/8”	17 3/4”	16”	16”	11 29/32”	3 17/32”	9/32”	1/2”	17”
1HLA4C	18”	21”	21”	5 3/4”	2”	8 3/4”	19 11/16”	18”	18”	14”	3 17/32”	9/32”	1/2”	19”
1HLA5C	18”	21”	21”	5 3/4”	2”	10 13/16”	19 11/16”	18”	18”	14”	3 17/32”	9/32”	1/2”	19”
1HLA7C	20”	23”	23”	5 3/4”	2”	11”	21 25/32”	20”	20”	16”	3 17/32”	9/32”	1/2”	21”
1HLA8C	20”	23”	23”	5 3/4”	2”	11”	21 25/32”	20”	20”	16”	3 17/32”	9/32”	1/2”	21”
1HLA9C	20”	23”	23”	5 3/4”	2”	11”	21 25/32”	20”	20”	16”	3 17/32”	9/32”	1/2”	21”
1HLB1C	24”	27”	27”	5 3/4”	2”	11 1/2”	25 21/32”	24 1/8”	24 1/8”	20 1/32”	3 17/32”	9/32”	1/2”	25”
1HLB2C	24”	27”	27”	5 3/4”	2”	11”	25 21/32”	24 1/8”	24 1/8”	20 1/32”	3 17/32”	9/32”	1/2”	25”
1HLB3C	24”	27”	27”	5 3/4”	2”	11”	25 21/32”	24 1/8”	24 1/8”	20 1/32”	3 17/32”	9/32”	1/2”	25”
1HLB4C	24”	27”	27”	5 3/4”	2”	11 1/2”	25 21/32”	24 1/8”	24 1/8”	20 1/32”	3 17/32”	9/32”	1/2”	25”
1HLB5C	30”	33”	33”	5 3/4”	3”	13 3/32”	31 5/8”	30 1/8”	30 1/8”	26”	3 17/32”	9/32”	1/2”	31”
1HLB6C	36”	39”	39”	5 3/4”	3”	13 11/16”	37 21/32”	36 5/32”	36 5/32”	32”	3 17/32”	9/32”	1/2”	37”

Dayton®

PERFORMANCE

MODEL	Prop. Dia.	Nom. HP	Amps	Nom. RPM	Bearing Type	Sones @ 0.0" SP @ 5'	CFM Air Delivery @ Static Pressure Shown			Recommended Speed Control
							0.00"	0.125"	0.25"	
1HKL9C	7"	1/25	0.40	1550	Sleeve	5.37	242	N/A	N/A	48C172
1HLA1C	10"	1/25	0.55	1550	Sleeve	6.19	600	354	N/A	48C172
1HLA2C	12"	1/20	0.60	1625	Sleeve	5.9	772	418	N/A	48C172
1HLA3C	16"	1/20	0.85	1550	Ball	6.39	1200	416	180	48C172
1HLA4C	18"	1/15	0.85	1075	Ball	7.4	1736	1108	N/A	48C172
1HLA5C	18"	1/4	3.50	1725	Ball	7.28	3852	2836	2172	
1HLA7C	20"	1/3	4.00	1725	Ball	8.1	4700	3068	2388	
1HLA8C	20"	1/4	3.50	1725	Ball	7.01	3948	2444	1732	
1HLA9C	20"	1/4	2.75	1075	Ball	6.67	3368	2312	1868	48C172
1HLB1C	24"	1/3	3.30	1075/945	Ball	7.42/6.91	4608/3483	3524/1800	3020/0	1DGZ9
1HLB2C	24"	1/4	2.75	1075	Ball	7.0	4244	2676	2220	
1HLB3C	24"	1/4	2.75	1075	Ball	7.0	4244	2676	2220	48C172
1HLB4C	24"	1/3	3.30	1075	Ball	7.42	4600	3040	2260	
1HLB5C	30"	1/3	3.30	825	Ball	7.01	5088	3432	1552	
1HLB6C	36"	1/2	6.00	825	Ball	8.24	6128	4380	2620	

INSTALLATION INSTRUCTION

1. The unit should be securely mounted in a rigid framework.

NOTE: Allowing the fan frame to flex or move will result in undue vibrations and possible premature motor, propeller, or shutter failure.

2. Install any auxiliary components such as thermostats, switches, or speed controls.

3. Connect power to the motor, using an approved wiring method.

Refer to the following wiring diagrams: Figures 2 through 4.

⚠ WARNING ***Fan frame and motor must be securely and adequately grounded to a suitable electrical ground, such as a ground water pipe or ground wiring system.***

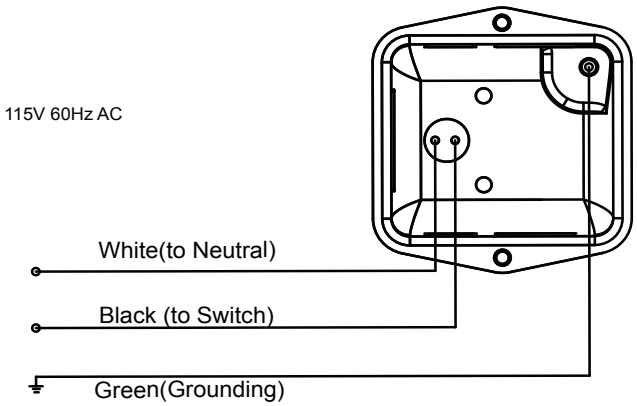

Figure 2 - Wiring Diagram Single speed. 115 volts connection.

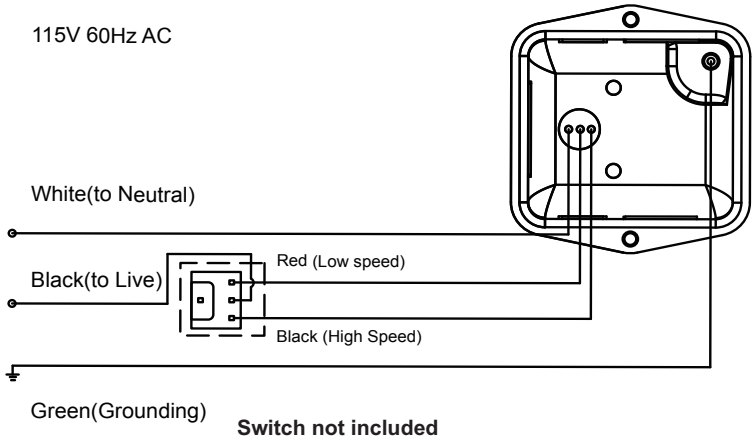

Figure 3 - Wiring Diagram Two speed. 115 volts connection.

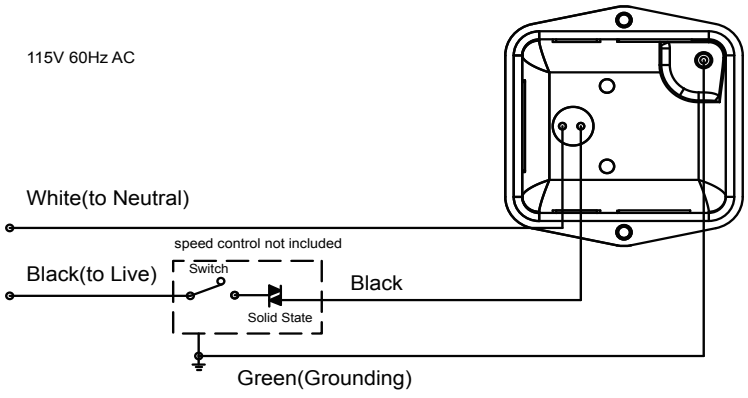

Figure 4 - Wiring Diagram - Speed Controllable . 115 volts connection.

OPERATION

1. Keep the area free of objects that could impede air flow on both the intake and exhaust side of fan.
2. For proper exhaust operation, a window, door, or louver should be opened for fresh air intake on the opposite side of the area to be ventilated.
3. Turn the fan ON, the shutter will open automatically. When the unit is turned OFF, the shutter will close.
4. Speed controllable units are designed to operate at a minimum of fifty percent line voltage.

MAINTAINANCE

1. Disconnect power source before servicing.
2. Periodically clean the propeller, guard, motor, and shutter of any accumulated dirt.

⚠ DANGER ***Do not depend on any switch as sole means of disconnecting power when installing or servicing. If power disconnect is not visible utilize OSHA Lock out/Tag out procedure.***

Failure to do so may result in fatal electrical shock.

Employ proper lock-out/tag-out procedures when performing maintenance.

REPAIR PARTS AND DISASSEMBLY

1. Disconnect power before servicing.
2. Refer to illustration of parts placement (Figure 5).
3. Remove the four screws holding the guard to the venturi panel. Remove the guard/motor/propeller assembly.
4. Loosen the set screw on propeller hub and remove the propeller.

TROUBLESHOOTING GUIDE

Symptom	Possible Cause(s)	Corrective Action
Excessive noise	1. Dry motor bearings	1. Relubricate motor bearings as per instructions or replace motor.
	2. Loose propeller	2. Tighten set screws on propeller hub.
	3. Bent or damaged propeller	3. Replace propeller
	4. Loose guard assembly or motor fasteners.	4. Tighten as required to 15-20 inch lbs.
Fan inoperative	1. Blown fuse or open circuit breaker	1. Replace fuse or reset circuit breaker
	2. Defective motor	2. Replace motor (see Figure 5)
	3. Speed control off or too low or inoperative	3. Turn controller on. if not working replace Speed controller
Insufficient air flow	1. Blocked intake or exhaust opening	1. Clear intake and exhaust openings of any obstructions. Clean, motor, guard, propeller, and shutter assembly. Increase fresh air intake opening size.
	2. Low voltage	2. Determine cause and correct
	3. Speed control set too low	3. Increase speed with controller

Dayton®

REPAIR PARTS ILLUSTRATION FOR Models 1HKL9C, 1HLA1C, 1HLA2C, 1HLA3C, 1HLA4C, 1HLA5C, 1HLA7C, 1HLA8C, 1HLA9C, 1HLB1C, 1HLB2C, 1HLB3C, 1HLB4C, 1HLB5C and 1HLB6C

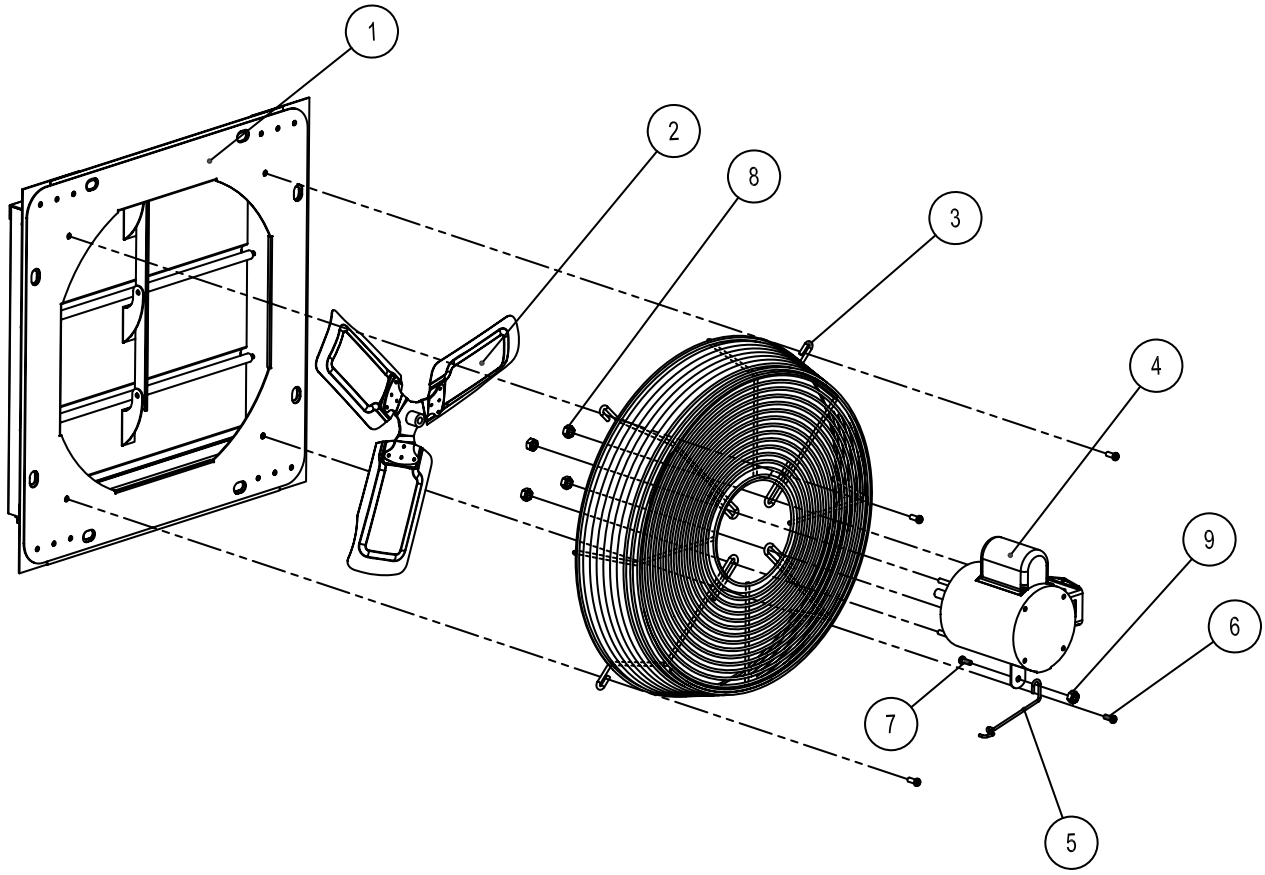

Figure 5 - Repair Parts Illustration

For Repair Parts, call 1-800-Grainger

24 hours a day – 365 days a year

Please provide following information:
-Model number
-Serial number (if any)
-Part description and number as shown in parts list

REPAIR PARTS LIST FOR Models 1HKL9C, 1HLA1C, 1HLA2C, 1HLA3C, 1HLA4C, 1HLA5C, 1HLA7C, 1HLA8C, 1HLA9C, 1HLB1C, 1HLB2C, 1HLB3C, 1HLB4C, 1HLB5C and 1HLB6C

Ref. No.	Description	Part Number for Models: 1HKL9C	1HLA1C	1HLA2C	1HLA3C	Qty.
1	Shutter	22YH75C	22YH76C	22YH77C	22YH78C	1
2	Propeller	41NC15	41NL09	41NL08	41NC16	1
3	Guard	42CW73	41NL12	41NL11	41NL13	1
4	Motor	41NL02	41NL02	41NL07	41NL03	1
5	Yoke Brace	*	*	*	*	*
6	Screw	M6 x 16mm	M6 x 16mm	M6 x 16mm	M6 x 16mm	4
7	Brace bolts	*	*	*	*	*
8	Motor nuts	M4 Std. Nut	M4 Std. Nut	M4 Std. Nut	M4 Std. Nut	4
9	Brace nuts	*	*	*	*	*

Ref. No.	Description	Part Number for Models: 1HLA4C	1HLA5C	1HLA7C	1HLA8C	Qty.
1	Shutter	22YH79C	22YH79C			1
2	Propeller	42LD29	41NL10	42LD28	41NC17	1
3	Guard	41NL19	41NL14	41NL18	41NL18	1
4	Motor	41NL06	41NL04	42EM85	41NL04	1
5	Yoke Brace	*	42CW81	42CW81	42CW81	1
6	Screws	M6 x 16mm	M6 x 16mm	M6 x 16mm	M6 x 16mm	4
7	Brace bolts	*	M8 X 16mm	M8 X 16mm	M8 X 16mm	1
8	Motor nuts	M4 Std. Nut	M5 Std. Nut	M5 Std. Nut	M5 Std. Nut	4
9	Brace nuts	*	M8 Nut w Flange	M8 Nut w Flange	M8 Nut w Flange	1

Ref. No.	Description	Part Number for Models: 1HLA9C	1HLB1C	1HLB2C	1HLB3C	Qty.
1	Shutter		22YH85C	22YH85C	22YH85C	1
2	Propeller	42LD30	42CW76	42LD31	42LD31	1
3	Guard	41NL17	41NL16	41NL15	41NL15	1
4	Motor	42EM86	42EM87	42EM86	42EM86	1
5	Yoke Brace	42CW81	42CW83	42CW83	42CW83	1
6	Screws	M6 x 16mm	M6 x 16mm	M6 x 16mm	M6 x 16mm	4
7	Brace bolts	M8 X 16mm	M8 X 16mm	M8 X 16mm	M8 X 16mm	1
8	Motor nuts	M5 Std. Nut	M5 Std. Nut	M5 Std. Nut	M5 Std. Nut	4
9	Brace nuts	M8 Nut w Flange	M8 Nut w Flange	M8 Nut w Flange	M8 Nut w Flange	1

Ref. No.	Description	Part Number for Models: 1HLB4C	1HLB5C	1HLB6C	Qty.
1	Shutter	22YH85C	22YH82C	22YH83C	1
2	Propeller	42CW76	42CW77	42CW78	1
3	Guard	41NL16	41NA92	41NA93	1
4	Motor	41NL05	42CW79	42CW80	1
5	Yoke Brace	42CW83	42CW83	42CW83	1
6	Screws	M6 x 16mm	M6 x 16mm	M6 x 16mm	4
7	Brace bolts	M8 X 16mm	M8 X 16mm	M8 X 16mm	1
8	Motor nuts	M5 Std. Nut	M5 Std. Nut	M5 Std. Nut	4
9	Brace nuts	M8 Nut w Flange	M8 Nut w Flange	M8 Nut w Flange	1

DAYTON ONE-YEAR LIMITED WARRANTY

DAYTON ONE-YEAR LIMITED WARRANTY. *All Dayton® product models covered in this manual are warranted by Dayton Electric Mfg. Co. ("Dayton") to the original user against defects in workmanship or materials under normal use for one year after date of purchase. If the Dayton product is part of a set, only the portion that is defective is subject to this warranty. Any product or part which is determined to be defective in material or workmanship and returned to an authorized service location, as Dayton or Dayton's designee designates, shipping costs prepaid, will be, as the exclusive remedy, repaired or replaced with a new or reconditioned product or part of equal utility or a full refund given, at Dayton's or Dayton's designee's option, at no charge. For limited warranty claim procedures, see "Warranty Service" below. This warranty is void if there is evidence of misuse, mis-repair, mis-installation, abuse or alteration. This warranty does not cover normal wear and tear of Dayton products or portions of them, or products or portions of them which are consumable in normal use. This limited warranty gives purchasers specific legal rights, and you may also have other rights which vary from jurisdiction to jurisdiction.*

WARRANTY DISCLAIMERS AND LIMITATIONS OF LIABILITY RELATING TO ALL CUSTOMERS FOR ALL PRODUCTS

LIMITATION OF LIABILITY. *TO THE EXTENT ALLOWABLE UNDER APPLICABLE LAW, DAYTON'S LIABILITY FOR CONSEQUENTIAL AND INCIDENTAL DAMAGES IS EXPRESSLY DISCLAIMED. DAYTON'S LIABILITY IN ALL EVENTS IS LIMITED TO AND SHALL NOT EXCEED THE PURCHASE PRICE PAID.*

WARRANTY DISCLAIMER. *A DILIGENT EFFORT HAS BEEN MADE TO PROVIDE PRODUCT INFORMATION AND ILLUSTRATE THE PRODUCTS IN THIS LITERATURE ACCURATELY; HOWEVER, SUCH INFORMATION AND ILLUSTRATIONS ARE FOR THE SOLE PURPOSE OF IDENTIFICATION, AND DO NOT EXPRESS OR IMPLY A WARRANTY THAT THE PRODUCTS ARE MERCHANTABLE, OR FIT FOR A PARTICULAR PURPOSE, OR THAT THE PRODUCTS WILL NECESSARILY CONFORM TO THE ILLUSTRATIONS OR DESCRIPTIONS. EXCEPT AS PROVIDED BELOW, NO WARRANTY OR AFFIRMATION OF FACT, EXPRESSED OR IMPLIED, OTHER THAN AS STATED IN THE "LIMITED WARRANTY" ABOVE IS MADE OR AUTHORIZED BY DAYTON.*

PRODUCT SUITABILITY. *MANY JURISDICTIONS HAVE CODES AND REGULATIONS GOVERNING SALES, CONSTRUCTION, INSTALLATION, AND/OR USE OF PRODUCTS FOR CERTAIN PURPOSES, WHICH MAY VARY FROM THOSE IN NEIGHBORING AREAS. WHILE ATTEMPTS ARE MADE TO ASSURE THAT DAYTON PRODUCTS COMPLY WITH SUCH CODES, DAYTON CANNOT GUARANTEE COMPLIANCE, AND CANNOT BE RESPONSIBLE FOR HOW THE PRODUCT IS INSTALLED OR USED. BEFORE PURCHASE AND USE OF A PRODUCT, REVIEW THE SAFETY/SPECIFICATIONS, AND ALL APPLICABLE NATIONAL AND LOCAL CODES AND REGULATIONS, AND BE SURE THAT THE PRODUCT, INSTALLATION, AND USE WILL COMPLY WITH THEM.*

CONSUMERS ONLY. *CERTAIN ASPECTS OF DISCLAIMERS ARE NOT APPLICABLE TO CONSUMER PRODUCTS SOLD TO CONSUMERS; (A) SOME JURISDICTIONS DO NOT ALLOW THE EXCLUSION OR LIMITATION OF INCIDENTAL OR CONSEQUENTIAL DAMAGES, SO THE ABOVE LIMITATION OR EXCLUSION MAY NOT APPLY TO YOU; (B) ALSO, SOME JURISDICTIONS DO NOT ALLOW A LIMITATION ON HOW LONG AN IMPLIED WARRANTY LASTS, SO THE ABOVE LIMITATION MAY NOT APPLY TO YOU; AND (C) BY LAW, DURING THE PERIOD OF THIS LIMITED WARRANTY, ANY IMPLIED WARRANTIES OF MERCHANTABILITY OR FITNESS FOR A PARTICULAR PURPOSE APPLICABLE TO CONSUMER PRODUCTS PURCHASED BY CONSUMERS, MAY NOT BE EXCLUDED OR OTHERWISE DISCLAIMED.*

THIS LIMITED WARRANTY ONLY APPLIES TO UNITED STATES PURCHASERS FOR DELIVERY IN THE UNITED STATES.

WARRANTY SERVICE

To obtain warranty service if you purchased the covered product directly from W.W. Grainger, Inc. ("Grainger"), (i) write or call or visit the local Grainger branch from which the product was purchased or another Grainger branch near you (see www.grainger.com for a listing of Grainger branches); or (ii) contact Grainger by going to www.grainger.com and clicking on the "Contact Us" link at the top of the page, then clicking on the "Email us" link; or (iii) call Customer Care (toll free) at 1-888-361-8649. To obtain warranty service if you purchased the covered product from another distributor or retailer, (i) go to www.grainger.com for Warranty Service; (ii) write or call or visit a Grainger branch near you; or (iii) call Customer Care (toll free) at 1-888-361-8649. In any case, you will need to provide, to the extent available, the purchase date, the original invoice number, the stock number, a description of the defect, and anything else specified in this Dayton One-Year Limited Warranty. You may be required to send the product in for inspection at your cost. You can follow up on the progress of inspections and corrections in the same ways. Title and risk of loss pass to buyer on delivery to common carrier, so if product was damaged in transit to you, file claim with carrier, not retailer, Grainger or Dayton. For warranty information for purchasers and/or delivery outside the United States, please use the following applicable contact information:

Dayton Electric Mfg. Co.,
100 Grainger Parkway, Lake Forest, IL 60045 U.S.A.
or call **+1-888-361-8649**

DAYTON

Line Volt Mechanical Tstat for Heating and Cooling, 120 to 277VAC

Item# **2E816** Mfr. Model# **2E816** Catalog Page# **3781** UNSPSC# **41112209**

How can we improve our **Product Images**?

Compare

Shipping Weight **1.05 lbs.**

Country of Origin **China** | *Country of Origin is subject to change.*

Note: Product availability is real-time updated and adjusted continuously. The product will be reserved for you when you complete your order. More

PRODUCT DETAILS

The Dayton® line volt mechanical thermostat is designed for automatic control of line voltage systems. The bimetal sensing element provides accurate control for heating or cooling systems. Snap-action dustproof contact assures closer temperature control and longer life without radio and television

View More

TECHNICAL SPECS

Item	**Line Volt Mechanical Tstat**
Switch Type	**SPDT**
Switch Action	**Open/Close on Rise**
Number of Switches	**1**
Control Range	**-10 Degrees to 100 Degrees F**
Differential	**6 to 8 Degrees F**
Height	**5-1/2"**
Width	**2"**
Depth	**2"**
Sensor Type	**Bi-Metal**
Features	**Ventilation Control**

For Use With	**Agricultural, Commercial and Industrial Applications**
Color	**Gray**
Application	**Heating and Cooling**
Voltage Range	**120 to 277VAC**
Inductive Amps @ 120V	**13.8A**
Inductive Amps @ 240V	**10A**
Full Load Amps @ 120V	**15A**
Full Load Amps @ 240VAC	**10A**
Contact Rating Resistive @ 120V	**22A**
Contact Rating Resistive @ 240V	**22A**
Standards	**UL**

Please read and save these instructions. Read carefully before attempting to assemble, install, operate or maintain the product described. Protect yourself and others by observing all safety information. Failure to comply with instructions could result in personal injury and/or property damage! Retain instructions for future reference.

Dayton® Fan Forced Wall Heaters

Description

Great heat response, contemporary design and very quiet operation make this fan-forced wall register heater ideal for bedrooms, dens, basements, breezeways, bathrooms, small offices, and workshops. This heater is for wall mounting only. Do not install heater behind towel rack, behind doors, in the floor or closet where airflow may be obstructed. These heaters come with a multi-wattage selection board that allows installer to permanently change wattage during installation.

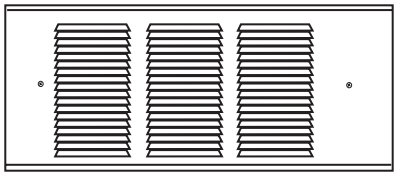

Figure 1

Specifications

Model Number	Volts	Watts/Amps	Watts/Amps	Watts/Amps	Watts/Amps
3UG15E	120	1500W/12.5A	1125W/9.4A	750W/6.3A	375W/3.1A
3UG16E	120	1500W/12.5A	1125W/9.4A	750W/6.3A	375W/3.1A
3UG17E	240*	2000W/8.3A	1500W/6.3A	1000W/4.2A	500W/2.1A
3UG18E	240*	2000W/8.3A	1500W/6.3A	1000W/4.2A	500W/2.1A
3UG19E	240*	2400W/10.0A	1800W/7.5A	1200W/5.0A	600W/2.5A
3UG20E	240*	2400W/10.0A	1800W/7.5A	1200W/5.0A	600W/2.5A

(*) Will operate on 208V at 75% wattage.

Dimensions

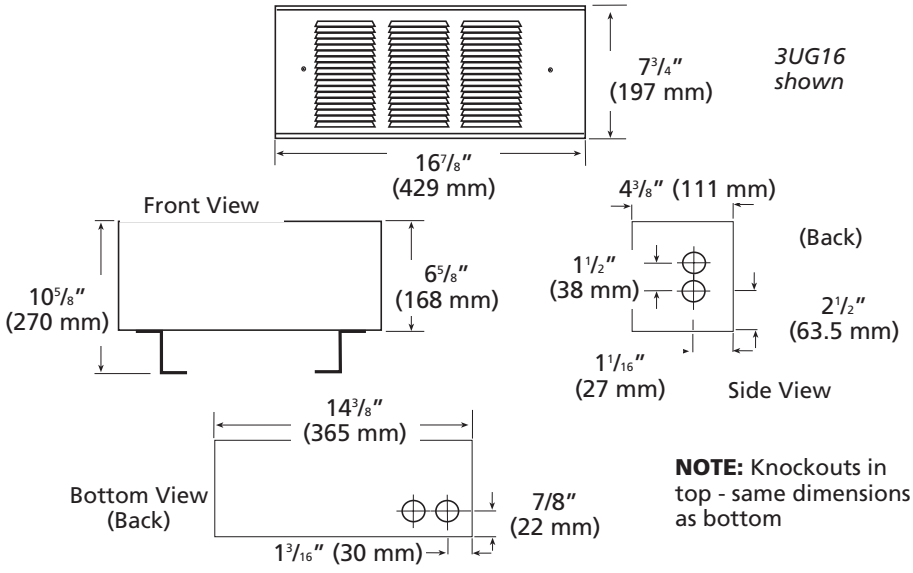

NOTE: Knockouts in top - same dimensions as bottom

General Safety Information

⚠ WARNING ***When using electrical appliances, basic precautions should always be followed to reduce the risk of fire, electric shock, and injury to persons, including the following:***

1. Read all instructions before installing or using this heater.
2. This heater is hot when in use. To avoid burns, do not let bare skin touch hot surfaces. Keep combustible materials, such as furniture, pillows, bedding, papers, clothes, etc. and curtains at least 3 feet (0.9 m) from the front of the heater.
3. Extreme caution is necessary when any heater is used by or near children or invalids and whenever the heater is left operating and unattended.
4. Do not operate any heater after it malfunctions. Disconnect power at service panel and have heater inspected by a reputable electrician before using.
5. Do not use outdoors.
6. To disconnect heater, turn controls to off, and turn off power to heater circuit at main disconnect panel.
7. Do not insert or allow foreign objects to enter any ventilation or exhaust opening as this may cause an electric shock, fire, or damage to the heater.

ENGLISH

ESPAÑOL

FRANÇAIS

Form 5S5350

Printed in China
09663
Version 1
05/2013

05/13
5200-11102-000
ECR 39441

Dayton® Fan Forced Wall Heaters

ENGLISH

General Safety Information (Continued)

8. To prevent a possible fire, do not block air intake or exhaust in any manner.
9. A heater has hot and arcing or sparking parts inside. Do not use it in areas where gasoline, paint, or flammable liquids are used or stored.
10. Use this heater only as described in this manual. Any other use not recommended by the manufacturer may cause fire, electric shock, or injury to persons.
11. This heater is provided with a red alarm light that will illuminate only if the heater has turned off as a result of overheating. If you see the light on, immediately turn the heater off and inspect for any objects on or adjacent to the heater that may have blocked the airflow or otherwise caused high temperatures to have occurred. **DO NOT OPERATE THE HEATER WITH THE ALARM LIGHT ILLUMINATING.**
12. This heater is intended for comfort heating applications and not intended for use in special environments. Do not use in damp or wet locations such as marine or greenhouse or in areas where corrosive or chemical agents are present.
13. When installing, see INSTALLATION INSTRUCTIONS for additional warnings and precautions.
14. For safe and efficient operation, and to extend the life of your heater, keep your heater clean. See MAINTENANCE INSTRUCTIONS.

SAVE THESE INSTRUCTIONS

Installation Instructions

⚠ WARNING ***To prevent a possible fire, injury to persons or damage to the heater, adhere to the following:***

1. Disconnect all power coming to heater at main service panel before wiring or servicing.
2. All wiring procedures and connections must be in accordance with the National and Local Codes having jurisdiction and the heater must be grounded.
3. Power supply must enter back box through the knockouts in the LEFT side of box. Do not use the knockouts in the right side of the box (see Figure 2). See also TOP marking on the back box for proper orientation.
4. Verify the power supply voltage coming to heater matches the ratings as shown on the heater nameplate.

⚠ CAUTION ***Energizing heater at a voltage greater than the voltage printed on the name-plate will damage the heater and void the warranty and could cause a fire.***

⚠ CAUTION ***High temperature, risk of fire, keep electrical cords, drapery, furnishings, and other combustibles at least 3 feet (0.9 m) from front of heater. Do not install heater behind doors, below towel racks, or in an area where it is subject to being blocked by furniture, curtains or storage materials. Hot air from the heater may damage certain fabrics and plastics.***

5. To reduce the risk of fire, do not store or use gasoline or other flammable vapors and liquids in the vicinity of the heater.
6. This heater is to be wall mounted only using back box provided. Do not install sideways, upside down, in the ceiling or floor.
7. The following minimum clearances must be maintained: Heater to floor - 4" (102 mm); Heater to any adjacent wall - 6" (152 mm); heater to ceiling - 36" (915 mm).
8. Do not operate the heater without the grille installed.
9. Do not use this heater for dry out, as the paint, plaster, sawdust and drywall sanding dust will permanently damage the heater and must be kept out of the heater.

Heaters are designed for recessed installation in standard 2 x 4 (50 mm x 100 mm) or larger stud walls with the back box mounted as shown in either Figure 2, or Figure 3.

NOTE: Heater should be controlled by either built-in thermostat or remote wall thermostat. Models 3UG16E, 3UG18E and 3UG20E are equipped with built-in thermostat.

This heater may be wired with standard building wiring (rated minimum 60°C). Refer to Table 1 for appropriate wire size for the heater to be used.

TO INSTALL BACK BOX IN NEW CONSTRUCTION – WALL STUDS 16" O.C.

(Refer to Figure 2)

1. Locate back box and back box support brackets (2). Back box must be installed with mounting rails to the top (see Figure 2B).

Models 3UG15E thru 3UG20E

ENGLISH

Installation Instructions (Continued)

2. Install back box support brackets with foot tabs directed towards the center of the back box as shown in Figure 2A and 2B. It may be necessary to bend up slightly the tab on the back box support bracket to allow insertion under the mounting lances on the bottom of the back box.

Total Amps	Wire Size* (Copper)	Circuit Breaker or Fuse Size
0 thru 12	#14	15 Amps
12.1 thru 16	#12	20 Amps
16.1 thru 24	#10	30 Amps

(*) Refer to NEC (National Electrical Code) for maximum run length to minimize voltage drop to 3% max. Circuit runs exceeding 100ft may require larger conductor size.

Table 1

3. Determine which knockout in back box will be used for field wiring and remove (see "Dimensions", page 1). Install strain relief (field supplied).
4. Fish field wiring through strain relief leaving 6" of wire inside box.
5. Insert back box assembly into wall, aligning rear of back box with back side of studs (see Figure 2C). The back box support brackets should be resting on the sole plate of the stud wall to insure proper spacing and leveling (see Figure 2B).
6. Using four (4) wood screws or drywall screws or four (4) nails (field supplied), secure back box to studs (see Figure 2B). Back box support brackets can now be removed. If not removed, secure to sole plate.

TO INSTALL BACK BOX IN NEW CONSTRUCTION – WALL STUDS SPACING GREATER THAN 16" O.C.

(Refer to Figure 3)

NOTE: Figure 3 depicts the back box installed with the left side adjoining stud. For a box with the right side adjoining a stud, reverse the directions shown below.

1. Locate back box and back box support brackets (2). Back box must be installed with mounting rails to the top (see Figure 3B).

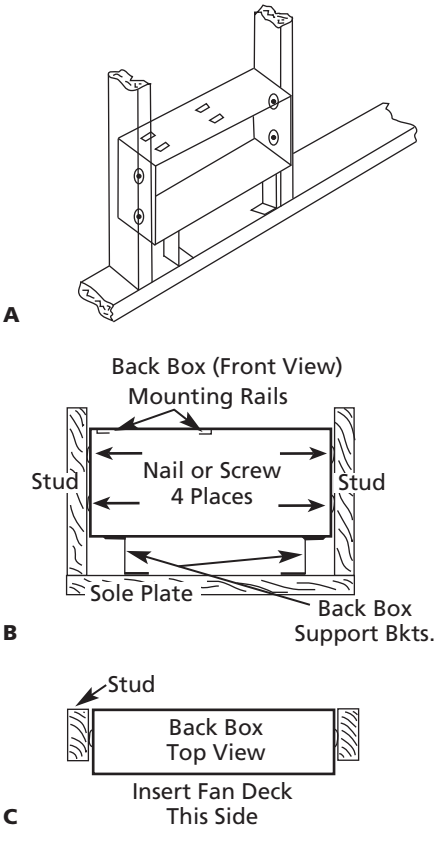

Figure 2

2. Determine which side of the back box will adjoin stud and insert back box support bracket on that side with foot tab directed towards center of back box. On the side of the back box that will not adjoin stud, install back box support bracket on that side with foot tab directed towards end of box and secure to box with 3/8" long sheet metal screw (provided).
3. Determine which knockout in back box will be used for field wiring and remove (see "Dimensions", page 1). Install strain relief (field supplied).
4. Fish field wiring through strain relief leaving 6" of wire inside box.

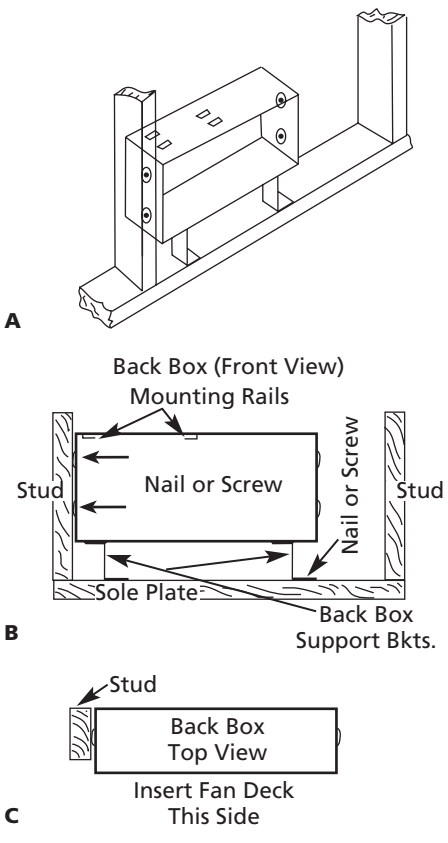

Figure 3

Dayton® Fan Forced Wall Heaters

ENGLISH

Installation Instructions (Continued)

5. Insert back box assembly into wall, aligning rear of back box with back side of stud (see Figure 3C). The back box support brackets should be resting on the sole plate of the stud wall to insure proper spacing and leveling (see Figure 3B).
6. Use two (2) wood screws or drywall screws or two (2) nails (field supplied) to secure the side of the back box that adjoins a stud. Use one (1) wood screw or drywall screw or one (1) nail (field supplied) to secure the foot tab of the back box support bracket (that is on the end opposite the stud) to the sole plate (see Figure 3B).

TO INSTALL BACK BOX IN EXISTING CONSTRUCTION

1. Locate wall studs to be sure that entire cut-out can be made between studs. At least one side of the cut-out must be flush with side of the stud. Bottom of cut-out must be 4" above finished floor minimum. Make a cut-out in wall 14½" wide x 6¾" high (368 mm x 171 mm) (see Figure 4).

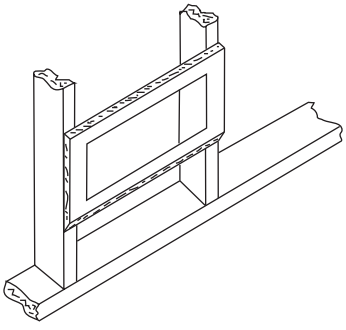

Figure 4

2. Determine which knockout in back box will be used for field wiring and remove (see "Dimensions", page 1). Install strain relief (field supplied).
3. Fish field wiring through strain relief leaving 6" of wire inside box.
4. Insert back box into cut-out. Rear of back box should be flush with back of stud wall.
5. Using four (4) wood screws or drywall screws (field supplied) or four (4) nails (field supplied), secure back box to studs (see Figure 2B). If wall studs are greater than 16"o.c., use only 2 fasteners and on the opposite end of the back box drive a 1" sheet metal screw (provided) through hole in end cap. This will draw the back box tight with drywall when grille is installed (see Figure 5).

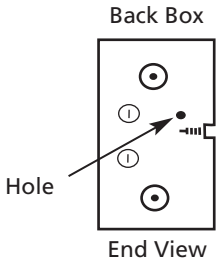

Figure 5

TO INSTALL THERMOSTAT ASSEMBLY (3UG16E, 3UG18E, 3UG20E ONLY)

NOTE: Thermostat assembly should not be installed until after the drywall phase of construction is complete. Dust from drywall installation and joint compound can be harmful if it gets inside thermostat assembly components.

1. The thermostat must be installed in right end of the heater.
2. Position thermostat above slot in right end of back box. Push tab on thermostat bracket through slot in top, right end of back box until the bracket locks in place (see Figure 6).

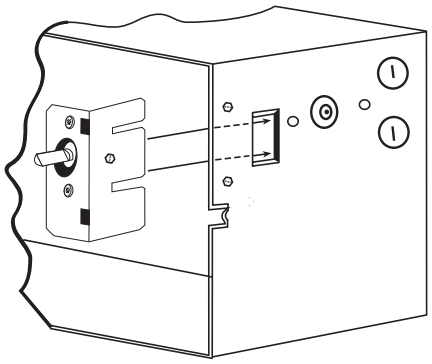

Figure 6

3. If the thermostat is controlling more than one heater, the total of all heater amperage ratings (see "Specifications") cannot exceed 25 amps at 120 volts AC thru 240 volts AC. Refer to Table 1 for correct wire, circuit breaker, or fuse sizing.
4. Connect one red and one black thermostat lead to power wiring per wiring diagram (Figure 7) using properly sized listed wirenuts (provided).
5. Fold wires back into wiring compartment behind thermostat to clear fan deck.

TO INSTALL FAN DECK ASSEMBLY

NOTE: Fan deck assembly should not be installed until after the drywall phase of construction is complete. Dust from drywall installation and joint compound can be harmful if it gets inside fan deck components.

1. Locate fan deck and mounting rails in top of back box.

Models 3UG15E thru 3UG20E

Installation Instructions (Continued)

2. Insert flanges on fan deck into mounting rails and slide back until fan deck stops (see Figure 8).
3. Make wiring connections, attaching one red and one black thermostat lead to two (2) black heater leads for 240V or to black and white heater leads for 120V with wirenuts (provided). Connect field ground lead to bare ground wire with wirenut (provided) (see Figure 7).

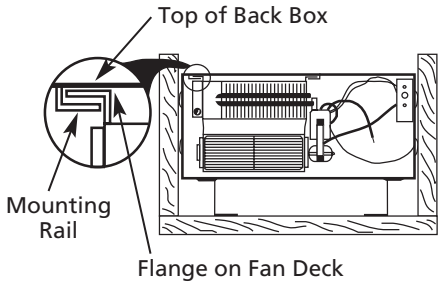

Figure 8

4. Remove 1/2" knockout from grille and install grille using two oval head screws. Push thermostat knob on thermostat shaft.
5. Reconnect power at main fuse or circuit breaker distribution panel.

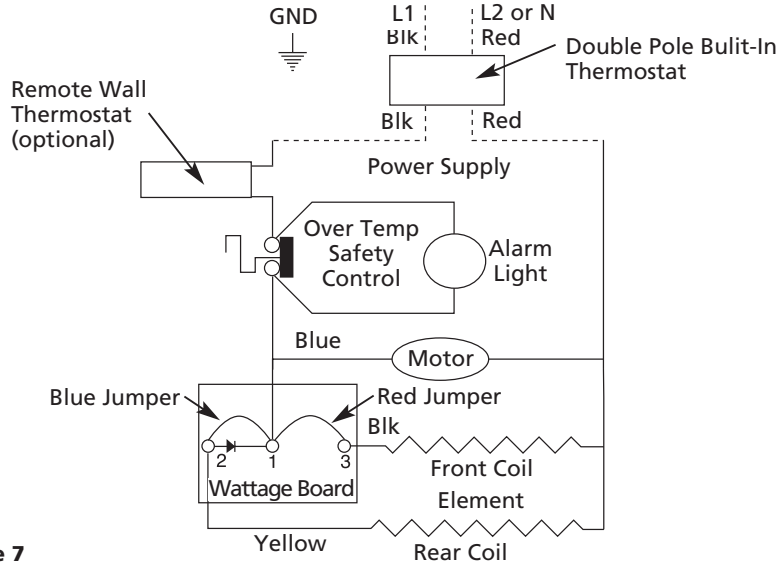

Figure 7

TO CHANGE WATTAGE OUTPUT

The chart below shows the wattages available by model. Each heater is factory wired for its maximum wattage. The last two columns in the chart refer to the jumpers on the wattage board. To change wattage, clip out Jumper 1 and/or Jumper 2 as shown in the chart below. Completely remove jumpers by clipping at both ends as close to the board as possible.

NOTE TO INSTALLER

When making wattage changes, the installer must circle the wattage on the white label located on the heat deck before installing the heat deck.

Operation Instructions

FOR MODELS 3UG16E, 3UG18E AND 3UG20 WITH BUILT IN THERMOSTAT

NOTE: For models using remote mounted thermostat, refer to the instructions included with the thermostat.

1. Heater must be properly installed before operation.
2. After heater is completely assembled, rotate thermostat knob counter-clockwise until control stops. This is the minimum heat setting.

Wattage					Jumper 1	Jumper 2
3UG19E & 3UG20E		3UG17E & 3UG18E		3UG15E & 3UG16E		
@240V	@208V	@240V	@208V	@120V	Blue Jumper	Red Jumper
2400	1800	2000	1500	1500	Leave in	Leave in
1800	1350	1500	1125	1125	Clip out	Leave in
1200	900	1000	750	750	Leave in	Clip out
600	450	500	375	375	Clip out	Clip out

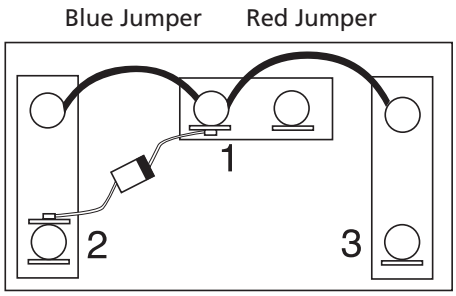

Wattage Board

Dayton® Fan Forced Wall Heaters

ENGLISH

Operation Instructions (Continued)

3. Turn power supply to heater "ON" at main switch panel.
4. Heater should not operate. If it operates disconnect power and recheck wiring.
5. Rotate thermostat clockwise until it stops (maximum heat setting).
6. Heater and fan should come on. If heater and fan do not come on, disconnect power and check wiring.
7. Allow heater to continue to operate until room temperature reaches desired comfort level. Then rotate thermostat knob counterclockwise slowly until thermostat clicks off.
8. It may be necessary to readjust thermostat a time or so until exact comfort level is attained. Rotation in the clockwise direction will increase the amount of time the heater will produce heat. Rotation in the counterclockwise direction will reduce the amount of time the heater is on.

NOTE: For best results, the heater should be left "ON" constantly during the heating season as the thermostat, when properly set, will maintain the desired temperature. In the full counter-clockwise position the heater will remain off until the room temperature drops well below freezing.

HOW TO RESET OVER-TEMPERATURE SAFETY CONTROL

This heater is provided with an over-temperature safety control that will turn the heater off if the heater overheats. If this control operates, a red alarm light, visible through the front of the grille, will illuminate to alert the owner that the heater is off and requires attention.

⚠ WARNING ***Do not tamper with or bypass any safety limits inside heater.***

1. Turn the heater off at the thermostat AND disconnect power at the circuit breaker for at least 10 minutes to allow the heater to cool and the safety control to reset.
2. When the heater has cooled, check to see if the heater is blocked or excessively dirty as these conditions may cause overheating. Remove any blockages and /or refer to the **User Cleaning Instructions** in the **Maintenance Instructions** section for cleaning instructions if dirty.
3. Turn circuit breaker on, reset thermostat to desired setpoint, and verify the heater is operating normally.
4. If the heater malfunctions again and the red light illuminates, disconnect power at the circuit breaker and have the heater inspected by a qualified electrician.

⚠ CAUTION ***Do not continue to attempt to use the heater if the safety control repeatedly operates after being reset. To do so could permanently damage the heater or create a fire or safety hazard.***

Maintenance Instructions

It is important to keep this heater clean. Your heater will give you years of service and comfort with only minimum care. To assure efficient operation follow the simple instructions below.

⚠ WARNING ***All servicing beyond simple cleaning that requires disassembly should be performed by qualified service personnel.***

⚠ WARNING ***To reduce the risk of fire and electric shock or injury, disconnect all power coming to heater at main service panel and check that the element is cool before servicing or performing maintenance.***

USER CLEANING INSTRUCTIONS

1. After the heater has cooled, a vacuum cleaner with brush attachment may be used to remove dust and lint from exterior surfaces of the heater including the grille openings.
2. With a damp cloth, wipe dust and lint from grille and exterior surfaces.
3. Return power to heater and check to make sure it is operating properly.

MAINTENANCE CLEANING INSTRUCTIONS

(To be performed only by Qualified Service Personnel)

At least annually, the heater should be cleaned and serviced by a qualified service person to assure safe and efficient operation. This should include the removal of the grille and, as necessary, the heater from the back box to clean residue from the unit. After completing the cleaning and servicing, the heater should be fully reassembled and checked for proper operation.

For Repair Parts, call 1-800-323-0620

24 hours a day – 365 days a year

Please provide following information:
-Model number
-Serial number (if any)
-Part description and number as shown in parts list

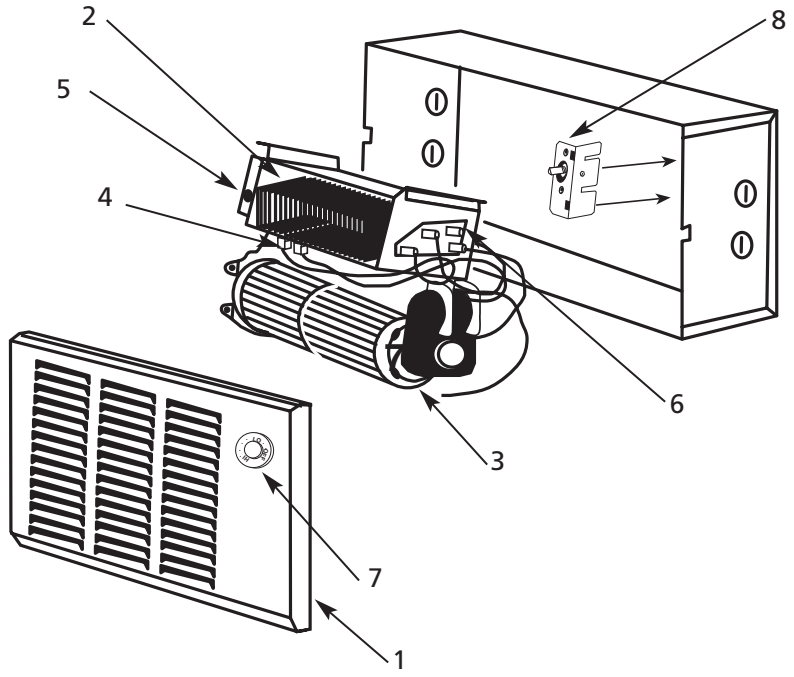

Figure 9 – Repair Parts Illustration for Fan Forced Wall Heaters

Repair Parts List for Fan Forced Wall Heaters

Reference Number	Description	Part Number for Models: 3UG15E & 3UG16E	3UG17E & 3UG18E	3UG19E & 3UG20E	Quantity
1	Grille	2501-2046-000	2501-2046-000	2501-2046-000	1
2	Element	302023802	302023805	302023809	1
3	Blower Assembly	1225-2001-000	1225-2001-001	1225-2002-001	1
4	Wattage Board	1249-2005-000	1249-2005-000	1249-2005-000	1
5	Light	3510-2010-000	3510-2010-001	3510-2010-001	1
6	High Limit	4520-11010-000	4520-11010-001	4520-11010-001	1
7	Knob	3301-2014-004	3301-2014-004	3301-2014-004	1
8	Thermostat (Double pole)	410130001	410130001	410130001	1
	Thermostat (Single pole)	410129001	410129001	410129001	1
*	Limit Control	410143000	410143000	4520-2029-000	1

(*) Not Shown.

Dayton® Fan Forced Wall Heaters

ENGLISH

LIMITED WARRANTY

DAYTON ONE-YEAR LIMITED WARRANTY. *DAYTON® FAN FORCED WALL HEATERS, MODELS COVERED IN THIS MANUAL, ARE WARRANTED BY DAYTON ELECTRIC MFG. CO. (DAYTON) TO THE ORIGINAL USER AGAINST DEFECTS IN WORKMANSHIP OR MATERIALS UNDER NORMAL USE FOR ONE YEAR AFTER DATE OF PURCHASE. ANY PART WHICH IS DETERMINED TO BE DEFECTIVE IN MATERIAL OR WORKMANSHIP AND RETURNED TO AN AUTHORIZED SERVICE LOCATION, AS DAYTON DESIGNATES, SHIPPING COSTS PREPAID, WILL BE, AS THE EXCLUSIVE REMEDY, REPAIRED OR REPLACED AT DAYTON'S OPTION. FOR LIMITED WARRANTY CLAIM PROCEDURES, SEE "PROMPT DISPOSITION" BELOW. THIS LIMITED WARRANTY GIVES PURCHASERS SPECIFIC LEGAL RIGHTS WHICH VARY FROM JURISDICTION TO JURISDICTION.*

LIMITATION OF LIABILITY. *TO THE EXTENT ALLOWABLE UNDER APPLICABLE LAW, DAYTON'S LIABILITY FOR CONSEQUENTIAL AND INCIDENTAL DAMAGES IS EXPRESSLY DISCLAIMED. DAYTON'S LIABILITY IN ALL EVENTS IS LIMITED TO AND SHALL NOT EXCEED THE PURCHASE PRICE PAID.*

WARRANTY DISCLAIMER. *A DILIGENT EFFORT HAS BEEN MADE TO PROVIDE PRODUCT INFORMATION AND ILLUSTRATE THE PRODUCTS IN THIS LITERATURE ACCURATELY; HOWEVER, SUCH INFORMATION AND ILLUSTRATIONS ARE FOR THE SOLE PURPOSE OF IDENTIFICATION, AND DO NOT EXPRESS OR IMPLY A WARRANTY THAT THE PRODUCTS ARE MERCHANTABLE, OR FIT FOR A PARTICULAR PURPOSE, OR THAT THE PRODUCTS WILL NECESSARILY CONFORM TO THE ILLUSTRATIONS OR DESCRIPTIONS. EXCEPT AS PROVIDED BELOW, NO WARRANTY OR AFFIRMATION OF FACT, EXPRESSED OR IMPLIED, OTHER THAN AS STATED IN THE "LIMITED WARRANTY" ABOVE IS MADE OR AUTHORIZED BY DAYTON.*

Technical Advice and Recommendations, Disclaimer. *Notwithstanding any past practice or dealings or trade custom, sales shall not include the furnishing of technical advice or assistance or system design. Dayton assumes no obligations or liability on account of any unauthorized recommendations, opinions or advice as to the choice, installation or use of products.*

Product Suitability. *Many jurisdictions have codes and regulations governing sales, construction, installation, and/or use of products for certain purposes, which may vary from those in neighboring areas. While attempts are made to assure that Dayton products comply with such codes, Dayton cannot guarantee compliance, and cannot be responsible for how the product is installed or used. Before purchase and use of a product, review the product applications, and all applicable national and local codes and regulations, and be sure that the product, installation, and use will comply with them.*

Certain aspects of disclaimers are not applicable to consumer products; e.g., (a) some jurisdictions do not allow the exclusion or limitation of incidental or consequential damages, so the above limitation or exclusion may not apply to you; (b) also, some jurisdictions do not allow a limitation on how long an implied warranty lasts, consequently the above limitation may not apply to you; and (c) by law, during the period of this Limited Warranty, any implied warranties of implied merchantability or fitness for a particular purpose applicable to consumer products purchased by consumers, may not be excluded or otherwise disclaimed.

Prompt Disposition. *A good faith effort will be made for prompt correction or other adjustment with respect to any product which proves to be defective within limited warranty. For any product believed to be defective within limited warranty, first write or call dealer from whom the product was purchased. Dealer will give additional directions. If unable to resolve satisfactorily, write to Dayton at address below, giving dealer's name, address, date, and number of dealer's invoice, and describing the nature of the defect. Title and risk of loss pass to buyer on delivery to common carrier. If product was damaged in transit to you, file claim with carrier.*

Manufactured for Dayton Electric Mfg. Co., 100 Grainger Parkway, Lake Forest, Illinois 60045-5201 U.S.A.

LINE VOLTAGE WALL MOUNTED THERMOSTATS

SERIES 2000 THERMOSTATS

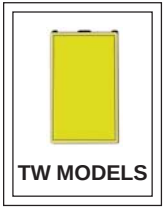

- 120V to 277V Operating Voltage
- Heat Only
- Single & Double Pole designs
- Wire leads
- Double pole models incorporate positive off
- 50ºF to 90ºF Temperature Range

UPC 686334	MODEL	COLOR	DESCRIPTION	LIST
502849	S2022H10AA	White	Single Pole with leads, 22 amp	27
502436	S2022H10AB	Ivory		
502856	D2022H10BA	White	Double pole with leads, 22 amp	36
502443	D2022H10BB	Ivory		
502917	S2025H10AA	White	Single Pole with leads, 25 amp	42
502924	D2025H10DA	White	Double pole with leads, 25 amp	48
504515	TW145	Beige	Single Pole with leads, 22 amp, 18 amp @ 277v, Tamper Resistant	47
505512	TW146	Beige	Double Pole version of above	55

MASTER PACK: 25 Pieces / 12 lbs.

Please read and save these instructions. Read through this owner's manual carefully before using product. Protect yourself and others by observing all safety information, warnings, and cautions. Failure to comply with instructions could result in personal injury and/or damage to product or property. Please retain instructions for future reference.

VAPOR TIGHT FIXTURE

Description

The LumaPro Vapor Tight fixture is designed for heavy-duty non-explosive environments. Vapor resistant for use in weather, exposed high traffic areas whenever dust or moisture are present. Applications include processing plants, cold storage, foundries, factories, loading docks. railways, tunnels, bridges, and walkways. UL listed for wet locations if installation has a weatherproof outlet box.

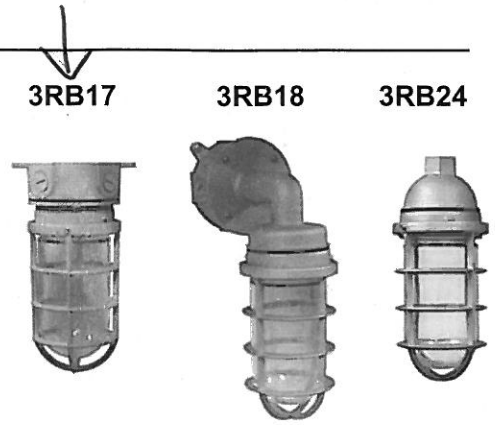

Unpacking

After unpacking unit, inspect carefully for any damage that may have occurred during transit. Check for loose, missing, or damaged parts. Shipping damage claim must be filed with carrier.

Specifications and Dimensions

Model	Volts	Watts	Housing Dimensions (in) H	W
3RB17	**120**	**200**	**9 ¾**	**5 ⅝**
3RB18	**120**	**200**	**12 ½**	**7**
3RB24	**120**	**200**	**10 ¼**	**4 ¼**

Wiring Diagrams

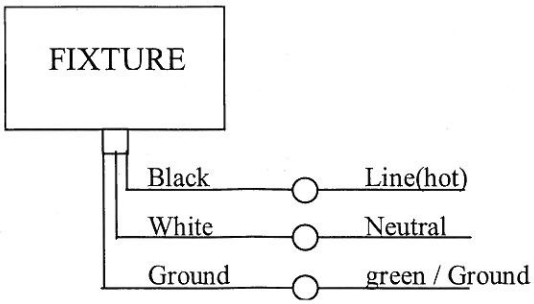

General Safety Information

1. Failure to comply with the instructions and safety information could result in malfunction of unit, fire hazard of unit, fire hazard or electrical shock.

⚠ CAUTION ***Make sure power supply line is 120 volts.***

LumaPro

Vapor Tight Fixture

General Safety Information (continued)

⚠WARNING ***Potential fatal shock hazard! Do not handle an energized fixture or energize any fixture with wet hands or when standing on a wet or damp surface, or in water.***

⚠WARNING ***Use only with grounded cover plates or boxes.***

⚠ CAUTION ***This fixture is not suitable for Hazardous or Classified locations.***

2. This fixture must be installed in accordance with all electrical and safety codes and ordinances and the most recent National electrical Code (NEC) and the Occupational Safety and Health Act (OSHA) . (Refer to Volume 1 on General Industry Standards and Interpretations (OSHA).)
3. All commercial installations should be performed by a qualified electrician.
4. Make certain the power conforms to the requirements of this fixture.
5. Disconnect power before installing or servicing. If the power disconnect switch is out of sight, lock it in the open position and tag it to prevent unexpected application of power.

Installation

⚠WARNING ***Model 3RB24 must be installed with a weatherproof outlet box if used in wet location. Models 3RB17 and 3RB18 are furnished with UL approved weatherproof outlet boxes.***

1. Remove guard and globe for ease of installation.
2. When using model 3RB17 or 3RB18 for wet locations use an approved caulking compound between mounting surface and back of fixture.
3. Secure fixture to mounting surface, fixture 3RB24 requires ¾" conduit or adapt to ½" conduit using reducer (supplied).
4. Use UL approved connectors (not furnished) to connect wires to power supply. Connect black fixture wire to black supply wire. Connect white fixture wire to white supply wire. Connect ground wire.
5. Screw 200 watt max incandescent lamp into lamp socket. Rough service or industrial lamps are recommended.
   ⚠ CAUTION ***DO NOT OVERTIGHTEN.***
6. Replace globe and guard, securing guard with set screw provided.

Maintenance

⚠WARNING ***Be sure all power to the fixture is disconnected before attempting any service or repair!***

Troubleshooting Chart

Symptom	Possible Causes	Corrective Action
Lamp will not operate	1. Loose bulb	1. Check bulb installation
	2. ON/OFF switch in OFF position	2. Put ON/OFF switch in ON position
	3. Loose wire	3. Check connections.

LumaPro

Vapor Tight Fixture

For Repair Parts, call 1-800-323-0620

24 hours a day – 365 days a year

Please provide the following:
- Model Number
- Serial Number (if any)
- Part description and number as shown on parts list

Address parts correspondence to:
Grainger Parts
P.O. Box 3074
1657 Shermer Road
Northbrook, IL 60065-3074 U.S.A.

Figure1– Repair Parts Illustration for Model 3RB17, 3RB18, 3RB24

3RB17 **3RB18** **3RB24**

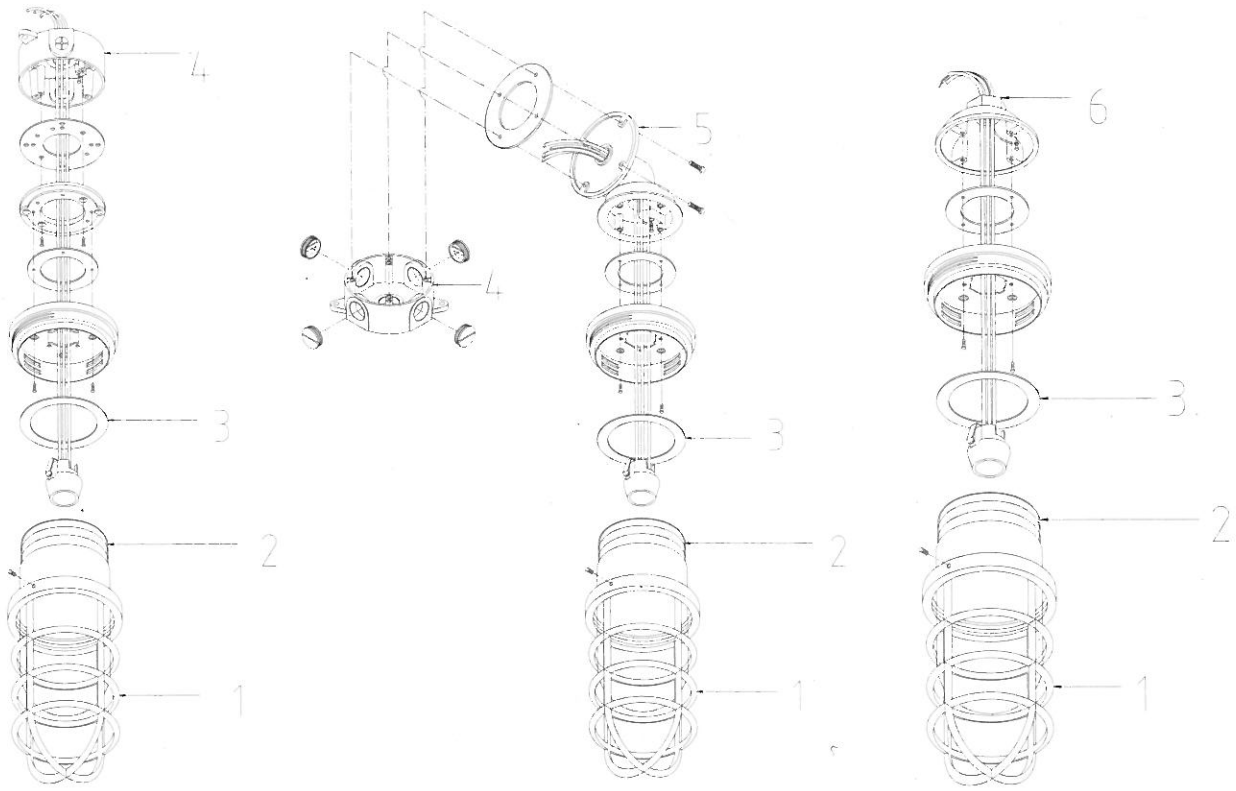

LumaPro

Vapor Tight Fixture

Repair Parts List 3RB17, 3RB18, 3RB24

Reference Number	Description	Part No. 3RB17	Part No. 3RB18	Part No. 3RB24	QTY
1	GUARD	3VGRD2	3VGRD2	3VGRD2	1
2	GLOBE	VG20	VG20	VG20	1
3	GASKET FOR GLOBE/GUARD	3VGKGL2	3VGKGL2	3VGKGL2	1
4	ELECTRICAL BOX	CPRB3	CPRB3	--	1
5	WALL ADAPTER	--	3VWAD	--	1
6	PENDANT ADAPTER	--	--	3VPEN3	1

Warranty

LIMITED ONE-YEAR WARRANTY

Should this product fail to perform satisfactorily due to a defect or poor workmanship within ONE YEAR from the date of purchase, return it to the place of purchase and it will be replaced, free of charge. Incidental or consequential damages are excluded from this warranty.

QSS004
Printed in China
06/09/04

Manufactured for Grainger International, Inc.
100 Grainger Pkwy., Lake Forest IL 60045 U.S.A.

LumaPro

4. Control Panel Materials

EnviroTrac

CyberPower

CP350COM Standy UPS

Offers energy savings, battery backup and surge protection.

The CyberPower Standby CP350COM uninterruptible power supply (UPS) safeguards PCs and other electronics (monitors, cable DSL/ modems, VoIP routers, fax machines, and home theater equipment) from blackouts, brownouts, surges, spikes, sags, and other power abnormalities.

This UPS system is ENERGY STAR® qualified with patented GreenPower UPS™ Bypass circuitry to save on energy costs by reducing energy consumption and heat buildup.

A Three-Year Warranty ensures that this UPS has passed our highest quality standards in design, assembly, material and workmanship, further protection is offered by a $75,000 Connected Equipment Guarantee.

Typical Applications

- Desktop Computers
- Personal Electronics

Features

- 350VA / 225W
- Standby Topology
- GreenPower UPS™
- ENERGY STAR® Qualified
- Full-time Surge Protection and Battery Backup
- Compact Form Factor
- 6 Outlets with RJ11 Protection
- EMI/RFI Filters
- 3-Year Warranty

CP350COM Standy UPS

Offers energy savings, battery backup and surge protection.

GENERAL	
UPS Topology	Standby
Energy Saving	GreenPower UPS™ High Efficiency
ENERGY STAR® Qualified	Yes
INPUT	
Voltage	96Vac - 140Vac
Frequency	47Hz - 63Hz
Surge Protection	10 Amp
Plug Type	NEMA 5-15P
Plug Style	Right Angle, 45 Degree Offset Right
Cord Length	5′
OUTPUT	
VA	350
Watts	255
On Battery Voltage	120Vac ± 5.0%
On Battery Frequency	50/60Hz ± 1%
On Battery Waveform	Simulated Sine Wave
Outlet Type	NEMA 5-15R
Outlets - Total	6
Outlets - Battery & Surge Protected	3
Outlets - Surge-Only Protected	3
Outlets - Widely Spaced	2
Overload Protection	Internal circuitry limiting / circuit breaker
Transfer Time	4ms
BATTERY	
Runtime at Half Load (min)	8
Runtime at Full Load (min)	2
Battery Type	Sealed Lead-Acid
Battery Size	12V/3.6AH
Battery Quantity	1
User Replaceable	No
Typical Recharge Time	8 Hours
SURGE PROTECTION & FILTERING	
Surge Suppression	810 Joules
Phone Protection RJ11	1-In, 1-Out
EMI/RFI Filtration	Yes

MANAGEMENT & COMMUNICATIONS	
HID Compliant USB Port	No
Serial Port	No
Cable Management	None
LED Indicators	Power On, Wiring Fault
Audible Alarms	Battery Mode, Battery Low, Overload, UPS Fault, Replace Battery
Software	None
PHYSICAL	
Form Factor	Compact
Keyhole Mounting Slots	No
Dimensions (WxHxD) (in.)	7.1 x 4.3 x 3.2
Weight (lbs.)	3.5
ENVIRONMENTAL	
Operating Temperature	32°F to 104°F / 0°C to 40°C
Operating Relative Humidity	0% - 80% non-condensing
CERTIFICATIONS	
Safety	UL1778, cUL 107.3, FCC DOC Class B
Environmental	RoHS Compliant
WARRANTY	
Product Warranty	3 Years Limited
Connected Equipment Guarantee	Lifetime
CEG Amount	$75,000

©2016 Cyber Power Systems (USA), Inc. All rights reserved. CyberPower reserves the right to change, without prior notice, product offerings or specifications.

ETR202

ETR202F

ZR011

- Two thermostats in one unit
  – one Normally Closed (NC) and one Normally Open (NO)
  – or two Normally Open (NO)
- Each with wide adjustable temperature range
- Available with °F or °C scale
- DIN rail mountable

Industry Standards
UL Recognized Component
cUL Recognized Component
CE Recognized
CSA Rated

FEATURES-SPECIFICATIONS

Applications
ETR202C and ETR202F

- Designed to provide air temperature control and monitoring in switch gear enclosures that are set up to operate with heaters, fans, filter ventilators, heat exchangers, and/or signal transmitters.
- When the enclosure reaches the pre-determined set point, temperature contacts in the thermostat are activated and the fan or heater automatically begins to operate.
- Thermostats prolong the life expectancy of heaters and fans by curtailing their operating hours and also increase the working efficiency of electrical components by exposing them to fewer contaminants from the surrounding environment.

ZR011

- The ZR011 houses two separate thermostats, allowing the independent control of heating and cooling or other equipment. Both thermostats offer wide adjustment ranges and are color coded for easy function recognition.
- Switching capacity:
  NC: 10A resistive/2A inductive @ 250 VAC
  NO: 5A resistive/2A inductive @ 250 VAC DC 30W

Features

- Normally Closed Thermostat—For the control of fan heaters and heaters
- Normally Open Thermostat—For the control of cooling units, fans, filter ventilators or switching, or signal transmitters in the event of overheating
- Available in Fahrenheit or Celsius scale
- Thermostatic bi-metallic sensor element
- Easily installed by clip mounting on 35mm or 38mm DIN rails
- Housing made from gray flame retardant UL94-VO plastic
- Connection: 2 pole terminal for max. 14 AWG
- Switching Difference (hysteresis): 12°F (7°C)
- Switching Capacity: 15 A (2) AC 120V, 10 A (2) AC 250V, 10A 12V DC, 5A 24V DC

ETR & ZR SERIES THERMOSTATS

CATALOG NUMBER	TEMP. SCALE	TEMP. RANGE	SWITCHING	FOR PRODUCT TYPE	DIMENSIONS H X W X D
ETR202F	Fahrenheit	32-140°F	Normally Closed	Heating	2.40x1.30x1.40 (60x33x35)
ETR202	Celsius	0-60°C	Normally Closed	Heating	2.40x1.30x1.40 (60x33x35)
ETR201F	Fahrenheit	32-140°F	Normally Open	Cooling	2.40x1.30x1.40 (60x33x35)
ETR201	Celsius	0-60°C	Normally Open	Cooling	2.40x1.30x1.40 (60x33x35)
ZR011F	Fahrenheit	32-140°F	Normally Closed/ Normally Open	Heating/Cooling	2.60x2.00x1.80 (67x50x46)
ZR011C	Celsius	0-60°C	Normally Closed/ Normally Open	Heating/Cooling	2.60x2.00x1.80 (67x50x46)

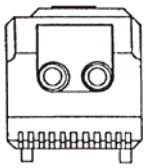

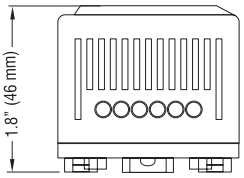

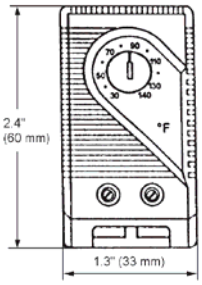

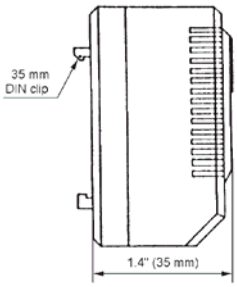

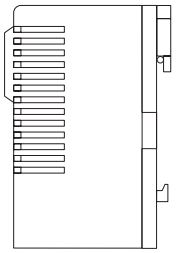

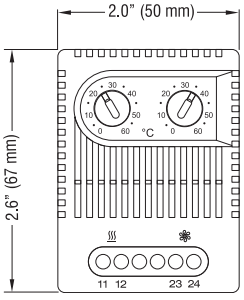

W-Series
WDU 4

Weidmüller Interface GmbH & Co. KG
Klingenbergstraße 16
D-32758 Detmold
Germany
Fon: +49 5231 14-0
Fax: +49 5231 14-292083
www.weidmueller.com

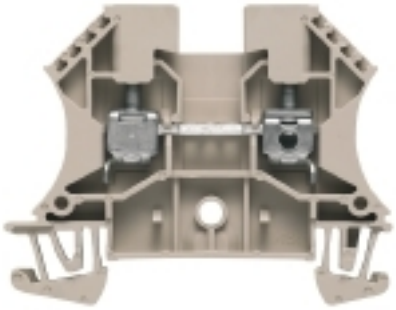

The versatile and extensive range of products - from 0.05 mm² to 300 mm² - means that you have diverse options for your applications at your disposal.
Hardened steel for mechanical strength and high-quality tinned copper for optimum conductivity. All materials comply with RoHS requirements and have been tested to current environment guidelines.

General ordering data

Type	WDU 4
Order No.	1020100000
Version	W-Series, Feed-through terminal, Rated cross-section: 4 mm², Screw connection
GTIN (EAN)	4008190150617
Qty.	100 pc(s).

Weidmüller

W-Series
WDU 4

Weidmüller Interface GmbH & Co. KG
Klingenbergstraße 16
D-32758 Detmold
Germany
Fon: +49 5231 14-0
Fax: +49 5231 14-292083
www.weidmueller.com

Technical data

Dimensions and weights

Width	6.1 mm	Height	60 mm
Height of lowest version	47 mm	Depth	46.5 mm
Weight	9 g	Net weight	9.57 g

Temperatures

Continuous operating temp., min.	-50 °C	Continuous operating temp., max.	120 °C

Rated data IECEx/ATEX

Certificate No. (ATEX)	KEMA98ATEX1683U	ATEX certificate	KEMA98ATEX1683U_d.pdf
ATEX certificate	KEMA98ATEX1683U_e.pdf	IEC Ex certificate	IECEXULD05.0008U_e.pdf
Max. voltage (ATEX)	690 V	Current (ATEX)	28 A
Wire cross section max. (ATEX)	4 mm²	Voltage, cross-connection	CrossConnectionGuide.pdf
Operating temperature range	For operating temperature range see EC Design Test Certificate / IEC Ex-Certificate of Conformity	Marking EN 60079-7	Ex e II
Marking ATEX Directive 94/9/EC	II 2 G D		

2 clampable wires (H05V/H07V) same cross-section (rated connection)

Wire connection cross section, finely stranded, two clampable wires, min.	0.5 mm²	Wire cross-section, finely stranded, two clampable wires, max.	1.5 mm²
Wire connection cross section, finely stranded with wire-end ferrules DIN 46228/1, 2 clampable wires, min.	0.5 mm²	Wire connection cross section, finely stranded with wire-end ferrules DIN 46228/1, 2 clampable wires, max.	1.5 mm²

Additional technical data

Explosion-tested version	Yes	Number of similar terminals	1
Open sides	right	Type of mounting	Snap-on
Version	Screw connection, for plug-in cross-connector, for screwable cross-connection, One end without connector		

CSA ratings data

Certificate No. (CSA)	200039-1057876	Voltage size C (CSA)	600 V
Current size B (CSA)	35 A	Current size C (CSA)	35 A
Wire cross section max. (CSA)	10 AWG	Wire cross section min. (CSA)	26 AWG

Weidmüller

W-Series
WDU 4

Weidmüller Interface GmbH & Co. KG
Klingenbergstraße 16
D-32758 Detmold
Germany
Fon: +49 5231 14-0
Fax: +49 5231 14-292083
www.weidmueller.com

Technical data

Clampable wires (rated connection)

Type of connection	Screw connection	Stripping length	10 mm
Blade size	0.6 x 3.5 mm	Connection direction	on side
Number of connections	2	Clamping range, rated connection, min.	0.13 mm²
Clamping range, rated connection, max.	6 mm²	Clamping screw	M 3
Tightening torque, min.	0.5 Nm	Tightening torque, max.	1 Nm
Torque level with DMS electric screwdriver	2	Gauge to IEC 60947-1	A4
Wire connection cross section, solid core, min. rated connection	0.5 mm²	Wire connection cross section, solid core max. rated connection	6 mm²
Wire connection cross section, stranded, rated connection, min.	1.5 mm²	Wire connection cross section, stranded, rated connection, max.	6 mm²
Wire connection cross section, finely stranded, max.	6 mm²	Wire connection cross-section, finely stranded, min.	0.5 mm²
Wire connection cross section, finely stranded with wire-end ferrules DIN 46228/1, rated connection, min.	0.5 mm²	Wire connection cross section, finely stranded with wire-end ferrules DIN 46228/1, rated connection, max.	4 mm²
Cross-section for connected conductor, finely stranded with wire-end ferrules and plastic collars DIN 46228/4, rated connection, min.	0.5 mm²	Wire connection cross-section, finely stranded with wire-end ferrules and plastic collars DIN 46228/4, rated connection, max.	4 mm²
Twin wire-end ferrules, min.	0.5 mm²	Twin wire-end ferrules, max.	2.5 mm²
Wire connection cross section AWG, min.	AWG 26	Wire connection cross section AWG, max.	AWG 10

Rated data

Rated cross-section	4 mm²	Rated voltage	800 V
Rated impulse withstand voltage	8 kV	Rated current	32 A
Current at maximum wires	41 A	Standards	IEC 60947-7-1
Pollution severity	3		

UL ratings data

Certificate No. (UR)	E60693	Voltage size C (UR)	600 V
Current size C (UR)	35 A	Conductor size Factory wiring max. (UR)	10 AWG
Conductor size Factory wiring min. (UR)	26 AWG	Conductor size Field wiring max. (UR)	10 AWG

Material data

Material	Wemid	Colour	Dark Beige
UL 94 flammability rating	V-0		

System specifications

Product family	W-Series	Type of connection	Screw connection
Connection direction	on side	Number of levels	1
Number of connections	2	No. of clamping points per level	2
Number of potentials per level	1	Levels cross-connected internally	No
Mounting rail	TS 35	End cover plate required	Yes
PE connection	No		

Classifications

ETIM 3.0	EC000897	UNSPSC	30-21-18-11
eClass 5.1	27-14-11-20	eClass 6.2	27-14-11-20
eClass 7.1	27-14-11-20		

Ordering information

S8VK-G series

Type	Power ratings	Input voltage	Output voltage	Output current	Boost current	Size (W × H × D) [mm]	Order code
Power supply Single phase	15 W	100 to 240 VAC, 90 to 350 VDC	5 V	3 A	3.6 A	22.5 × 90 × 90	S8VK-G01505
			12 V	1.2 A	1.44 A		S8VK-G01512
			24 V	0.65 A	0.78 A		S8VK-G01524
	30 W		5 V	5 A	6 A	32 × 90 × 90	S8VK-G03005
			12 V	2.5 A	3 A		S8VK-G03012
			24 V	1.3 A	1.56 A		S8VK-G03024
	60 W		12 V	4.5 A	5.4 A	32 × 90 × 110	S8VK-G06012
			24 V	2.5 A	3 A		S8VK-G06024
	120 W		24 V	5 A	6 A	40 × 125 × 112.2	S8VK-G12024
	240 W		24 V	10 A	12 A	60 × 125 × 140	S8VK-G24024
			48 V	5 A	6 A		S8VK-G24048
	480 W		24 V	20 A	24 A	95 × 125 × 140	S8VK-G48024
			48 V	10 A	12 A		S8VK-G48048

S8VK-C series

Type	Power ratings	Input voltage	Output voltage	Output current	Boost current	Size (W × H × D) [mm]	Order code
Power supply Single phase	60 W	100 to 240 VAC, 90 to 350 VDC	24 V	2.5 A	-	32 × 90 × 110	S8VK-C06024
	120 W		24 V	5 A	-	40 × 125 × 112.2	S8VK-C12024
	240 W		24 V	10 A	-	60 × 125 × 140	S8VK-C24024
	480 W		24 V	20 A	-	95 × 125 × 140	S8VK-C48024

S8VK-T series

Type	Power ratings	Input voltage	Output voltage	Output current	Boost current	Size (W × H × D) [mm]	Order code
Power supply Three phase	120 W	380 to 480 VAC, 450 to 600 VDC	24 V	5 A	6 A	40 × 125 × 112.2	S8VK-T12024
	240 W		24 V	10 A	12 A	60 × 125 × 140	S8VK-T24024
	480 W		24 V	20 A	24 A	95 × 125 × 140	S8VK-T48024
	960 W	380 to 480 VAC	24 V	40 A	48 A	135 × 125 × 170	S8VK-T96024

S8VK-R series

Type	Current ratings	Input voltage	Output current	Size (W × H × D) [mm]	Order code
Redundancy Module	10 A	5 to 30 VDC	10 A	32 × 90 × 110	S8VK-R10
	20 A	10 to 60 VDC	20 A	40 × 125 × 112.2	S8VK-R20

S8VK-G Nomenclature

15-W Models	30-W / 60-W / 120-W / 240-W Models	480-W Models
S8VK-G015□□	S8VK-G030□□/S8VK-G060□□/S8VK-G12024/S8VK-G240□□	S8VK-G480□□

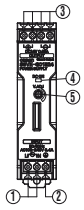

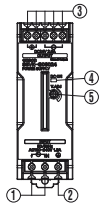

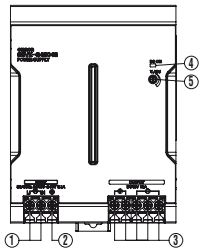

Note: The S8VK-G06024 is shown above.

No.	Name	Function
1	Input terminals (L), (N)	Connect the input lines to these terminals. *1
2	Protective Earth terminal (PE)	Connect the ground line to this terminal. *2
3	DC Output terminals (-V), (+V)	Connect the load lines to these terminals.
4	Output indicator (DC ON: Green)	Lights while a direct current (DC) output is ON.
5	Output voltage adjuster (V.ADJ)	Use to adjust the voltage.

*1. The fuse is located on the (L) side. It is not user-replaceable. For a DC input, connect the positive voltage to the L terminal.
*2. This is the protective earth terminal specified in the safety standards. Always ground this terminal.

S8VK-G Dimensions

S8VK-G015□□ (15 W)

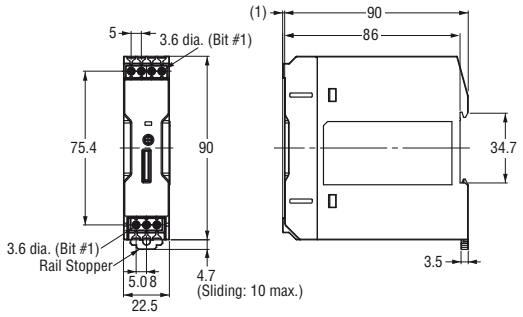

S8VK-G12024 (120 W)

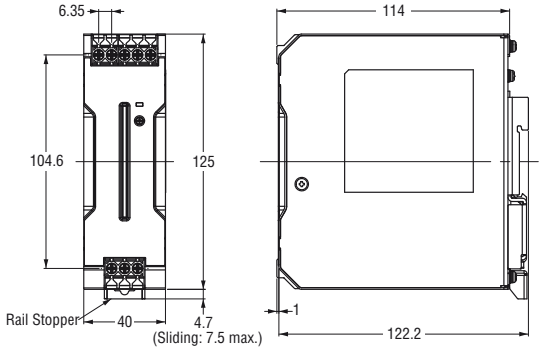

S8VK-G030□□ (30 W)

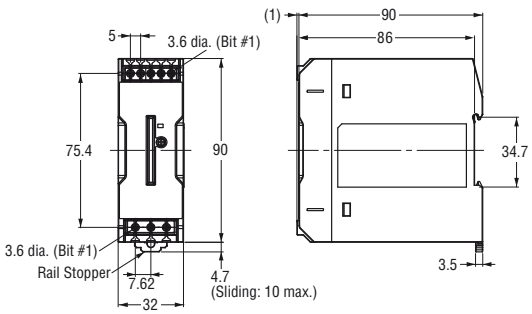

S8VK-G240□□ (240 W)

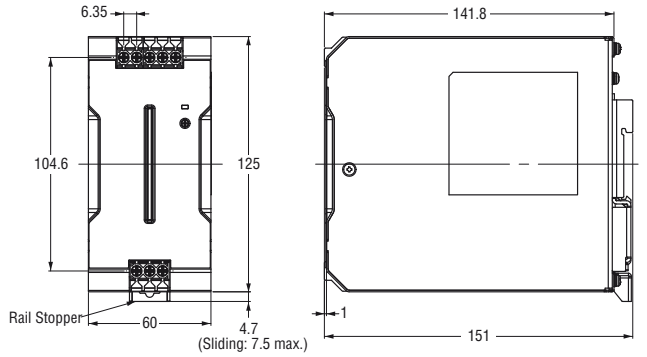

S8VK-G060□□ (60 W)

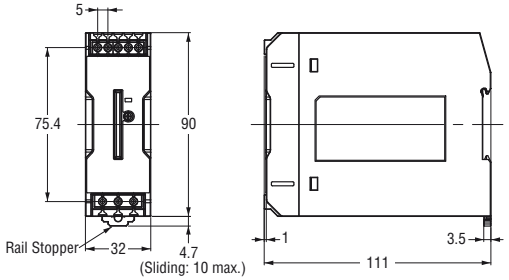

S8VK-G480□□ (480 W)

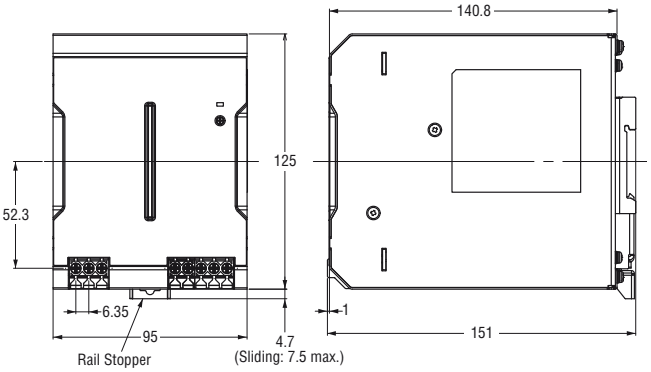

1P - 10kA
1 module

P1 MB 1P...

Order code	Curve	IEC In	IEC Icn	N° of DIN module	Qty per pkg	Wt
	Type	[A]	[kA]	n°	n°	[kg]
Single pole, thermal and magnetic trip type, B-curve characteristic.						
P1 MB 1P B01	B	1	10	1	12	0.115
P1 MB 1P B02	B	2	10	1	12	0.115
P1 MB 1P B04	B	4	10	1	12	0.115
P1 MB 1P B06	B	6	10	1	12	0.115
P1 MB 1P B10	B	10	10	1	12	0.115
P1 MB 1P B13	B	13	10	1	12	0.115
P1 MB 1P B16	B	16	10	1	12	0.115
P1 MB 1P B20	B	20	10	1	12	0.115
P1 MB 1P B25	B	25	10	1	12	0.115
P1 MB 1P B32	B	32	10	1	12	0.115
P1 MB 1P B40	B	40	10	1	12	0.115
P1 MB 1P B50	B	50	10	1	12	0.115
P1 MB 1P B63	B	63	10	1	12	0.115
Single pole, thermal and magnetic trip type, C-curve characteristic.						
P1 MB 1P C01	C	1	10	1	12	0.115
P1 MB 1P C02	C	2	10	1	12	0.115
P1 MB 1P C04	C	4	10	1	12	0.115
P1 MB 1P C06	C	6	10	1	12	0.115
P1 MB 1P C10	C	10	10	1	12	0.115
P1 MB 1P C13	C	13	10	1	12	0.115
P1 MB 1P C16	C	16	10	1	12	0.115
P1 MB 1P C20	C	20	10	1	12	0.115
P1 MB 1P C25	C	25	10	1	12	0.115
P1 MB 1P C32	C	32	10	1	12	0.115
P1 MB 1P C40	C	40	10	1	12	0.115
P1 MB 1P C50	C	50	10	1	12	0.115
P1 MB 1P C63	C	63	10	1	12	0.115
Single pole, thermal and magnetic trip type, D-curve characteristic.						
P1 MB 1P D01	D	1	10	1	12	0.115
P1 MB 1P D02	D	2	10	1	12	0.115
P1 MB 1P D04	D	4	10	1	12	0.115
P1 MB 1P D06	D	6	10	1	12	0.115
P1 MB 1P D10	D	10	10	1	12	0.115
P1 MB 1P D13	D	13	10	1	12	0.115
P1 MB 1P D16	D	16	10	1	12	0.115
P1 MB 1P D20	D	20	10	1	12	0.115
P1 MB 1P D25	D	25	10	1	12	0.115
P1 MB 1P D32	D	32	10	1	12	0.115
P1 MB 1P D40	D	40	10	1	12	0.115
P1 MB 1P D50	D	50	10	1	12	0.115
P1 MB 1P D63	D	63	10	1	12	0.115

General characteristics

These devices are used to protect against short circuits and overloads of wiring installations and loads in panel boards, office buildings, stores and similar applications. Their purpose is circuit protection, circuit isolation and load operation controls. They have instantaneous trip characteristics defined as follows:
- B-curve: instantaneous trip 3…5 times In for non-inductive or low inductive loads (heating resistors, generators, very long wire lines)
- C-curve: instantaneous trip 5…10 times In for inductive loads (mixed and inductive resistive loads with low inrush current)
- D-curve: instantaneous trip 10…14 times In for highly inductive loads (loads with high inrush and current such as motors).

Main features include:
- IEC rated current In: 1…63A
- Pole width: 17.5mm / 0.69”
- Contact status with flag indicator
- Trip characteristic: Curve type B, C and D
- Auxiliary contacts and trip releases mounted on MCB left side
- Fixing on 35mm DIN rail (IEC/EN 60715).

Operational characteristics
- Dissipation per pole: 3…13W
- IEC rated insulation voltage Ui: 440V
- IEC rated impulse voltage Uimp: 4kV
- IEC rated operational voltage Ue: 230/400VAC.

Certifications and compliance

Certifications obtained: TÜV – Rheinland; UL Recognized for USA and Canada (cURus – File E359585) as “Supplementary Protectors”, designated as Overcurrent type, for general industrial use, suitable for factory wiring only with 125-135% tripping current of amp rating. Products having this type of marking are intended for use as components of complete workshop- assembled equipment.
Compliant with standards: IEC/EN 60898-1, IEC/EN 60947-2, UL 1077, CSA C22.2 n°235.

3P - 10kA
3 modules

P1 MB 3P...

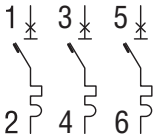

Order code	Curve	IEC In	IEC Icn	N° of DIN module	Qty per pkg	Wt
	Type	[A]	[kA]	n°	n°	[kg]
Three pole, thermal and magnetic trip type, B-curve characteristic.						
P1 MB 3P B01	B	1	10	3	4	0.345
P1 MB 3P B02	B	2	10	3	4	0.345
P1 MB 3P B04	B	4	10	3	4	0.345
P1 MB 3P B06	B	6	10	3	4	0.345
P1 MB 3P B10	B	10	10	3	4	0.345
P1 MB 3P B13	B	13	10	3	4	0.345
P1 MB 3P B16	B	16	10	3	4	0.345
P1 MB 3P B20	B	20	10	3	4	0.345
P1 MB 3P B25	B	25	10	3	4	0.345
P1 MB 3P B32	B	32	10	3	4	0.345
P1 MB 3P B40	B	40	10	3	4	0.345
P1 MB 3P B50	B	50	10	3	4	0.345
P1 MB 3P B63	B	63	10	3	4	0.345
Three pole, thermal and magnetic trip type, C-curve characteristic.						
P1 MB 3P C01	C	1	10	3	4	0.345
P1 MB 3P C02	C	2	10	3	4	0.345
P1 MB 3P C04	C	4	10	3	4	0.345
P1 MB 3P C06	C	6	10	3	4	0.345
P1 MB 3P C10	C	10	10	3	4	0.345
P1 MB 3P C13	C	13	10	3	4	0.345
P1 MB 3P C16	C	16	10	3	4	0.345
P1 MB 3P C20	C	20	10	3	4	0.345
P1 MB 3P C25	C	25	10	3	4	0.345
P1 MB 3P C32	C	32	10	3	4	0.345
P1 MB 3P C40	C	40	10	3	4	0.345
P1 MB 3P C50	C	50	10	3	4	0.345
P1 MB 3P C63	C	63	10	3	4	0.345
Three pole, thermal and magnetic trip type, D-curve characteristic.						
P1 MB 3P D01	D	1	10	3	4	0.345
P1 MB 3P D02	D	2	10	3	4	0.345
P1 MB 3P D04	D	4	10	3	4	0.345
P1 MB 3P D06	D	6	10	3	4	0.345
P1 MB 3P D10	D	10	10	3	4	0.345
P1 MB 3P D13	D	13	10	3	4	0.345
P1 MB 3P D16	D	16	10	3	4	0.345
P1 MB 3P D20	D	20	10	3	4	0.345
P1 MB 3P D25	D	25	10	3	4	0.345
P1 MB 3P D32	D	32	10	3	4	0.345
P1 MB 3P D40	D	40	10	3	4	0.345
P1 MB 3P D50	D	50	10	3	4	0.345
P1 MB 3P D63	D	63	10	3	4	0.345

General characteristics

These devices are used to protect against short circuits and overloads of wiring installations and loads in panel boards, office buildings, stores and similar applications. Their purpose is circuit protection, circuit isolation and load operation controls. They have characteristics of instantaneous trip defined as follows:
- B-curve: instantaneous trip 3…5 times In for non-inductive or low inductive loads (heating resistors, generators, very long wire lines)
- C-curve: instantaneous trip 5…10 times In for inductive loads (mixed loads, resistive and inductive with low inrush current)
- D-curve: instantaneous trip 10…14 times In for highly inductive loads (loads with high inrush and current such as motors).

Main features include:
- IEC rated current In: 1…63A
- Pole width: 17.5mm / 0.69”
- Contact status with flag indicator
- Trip characteristic: Curve type B, C and D
- Auxiliary contacts and trip releases mounted on left side
- Fixing on 35mm DIN rail (IEC/EN 60715).

Operational characteristics
- Dissipation per pole: 3…13W
- IEC rated insulation voltage Ui: 440V
- IEC rated impulse voltage Uimp: 4kV
- IEC rated operational voltage Ue: 230/400VAC.

Certifications and compliance

Certifications obtained: TÜV – Rheinland; UL Recognized for USA and Canada (cURus – File E359585) as “Supplementary Protectors”, designated as Overcurrent type, for general industrial use, suitable for factory wiring only with 125-135% tripping current of amp rating. Products having this type of marking are intended for use as components of complete workshop- assembled equipment.
Compliant with standards: IEC/EN 60898-1, IEC/EN 60947-2, UL 1077, CSA C22.2 n°235.

Product data sheet
Characteristics

ATV312HD15M3
variable speed drive ATV312 - 15kW - 28.5kVA - 628W - 200..240 V- 3-phase supply

Product availability : Stock - Normally stocked in distribution facility

Price* : 1721.00 USD

Main

Range of product	Altivar 312
Product or component type	Variable speed drive
Product destination	Asynchronous motors
Product specific application	Simple machine
Assembly style	With heat sink
Component name	ATV312
Motor power kW	15 kW
Motor power hp	20 hp
[Us] rated supply voltage	200...240 V (- 15...10 %)
Supply frequency	50...60 Hz (- 5...5 %)
Phase	3 phases
Line current	82.1 Afor 200 V, 22 kA 71.9 Afor 240 V
EMC filter	Without EMC filter
Apparent power	28.5 kVA
Maximum transient current	99 Afor 60 s
Power dissipation in W	628 W at nominal load
Speed range	1...50
Asynchronous motor control profile	Factory set : constant torque Sensorless flux vector control with PWM type motor control signal
Electrical connection	L1, L2, L3, U, V, W, PA, PB, PA/+, PC/- terminal 0.04 in² (25 mm²) AWG 3 AI1, AI2, AI3, AOV, AOC, R1A, R1B, R1C, R2A, R2B, LI1...LI6 terminal 0 in² (2.5 mm²) AWG 14
Supply	Internal supply for logic inputsat 19...30 V, <= 100 mAfor overload and short-circuit protection Internal supply for reference potentiometer (2.2 to 10 kOhm)at 10...10.8 V, <= 10 mAfor overload and short-circuit protection
Communication port protocol	CANopen Modbus
IP degree of protection	IP20 on upper part without cover plate

Disclaimer: This documentation is not intended as a substitute for and is not to be used for determining suitability or reliability of these products for specific user applications

	IP21 on connection terminals IP31 on upper part IP41 on upper part
Option card	CANopen daisy chain communication card DeviceNet communication card Fipio communication card Modbus TCP communication card Profibus DP communication card

Complementary

Supply voltage limits	170...264 V
Network frequency	47.5...63 Hz
Prospective line Isc	22 kA
Continuous output current	66 Aat 4 kHz
Output frequency	0...500 kHz
Nominal switching frequency	4 kHz
Switching frequency	2...16 kHz adjustable
Transient overtorque	170...200 % of nominal motor torque
Braking torque	100 % with braking resistor continuously 150 % without braking resistor 150 % with braking resistor for 60 s
Regulation loop	Frequency PI regulator
Motor slip compensation	Adjustable Automatic whatever the load Suppressable
Output voltage	<= power supply voltage
Tightening torque	39.82 lbf.in (4.5 N.m) L1, L2, L3, U, V, W, PA, PB, PA/+, PC/- 5.31 lbf.in (0.6 N.m) AI1, AI2, AI3, AOV, AOC, R1A, R1B, R1C, R2A, R2B, LI1...LI6
Insulation	Electrical between power and control
Analogue input number	3
Analogue input type	AI1 configurable voltage 0...10 V, input voltage 30 V max, impedance 30000 Ohm AI2 configurable voltage +/- 10 V, input voltage 30 V max, impedance 30000 Ohm AI3 configurable current 0...20 mA, impedance 250 Ohm
Sampling duration	AI1, AI2, AI3 8 ms analog LI1...LI6 4 ms discrete
Response time	AOV, AOC 8 ms analog R1A, R1B, R1C, R2A, R2B 8 ms discrete
Linearity error	+/- 0.2 % output
Analogue output number	1
Analogue output type	AOC configurable current 0...20 mA, impedance 800 Ohm, resolution 8 bits AOV configurable voltage 0...10 V, impedance 470 Ohm, resolution 8 bits
Discrete input logic	(LI1...LI4) logic input not wired, < 13 V (state 1) (LI1...LI6) negative logic (source), > 19 V (state 0) (LI1...LI6) positive logic (source), < 5 V (state 0), > 11 V (state 1)
Discrete output number	2
Discrete output type	(R1A, R1B, R1C) configurable relay logic 1 NO + 1 NC, electrical durability 100000 cycles (R2A, R2B) configurable relay logic NC, electrical durability 100000 cycles
Minimum switching current	R1-R2 10 mAat 5 V DC
Maximum switching current	R1-R2 on inductive load, 2 A at 250 V AC, (cos phi = 0.4, and L/R = 7 ms) R1-R2 on inductive load, 2 A at 30 V DC, (cos phi = 0.4, and L/R = 7 ms) R1-R2 on resistive load, 5 A at 250 V AC, (cos phi = 1, and L/R = 0 ms) R1-R2 on resistive load, 5 A at 30 V DC, (cos phi = 1, and L/R = 0 ms)
Discrete input number	6
Discrete input type	(LI1...LI6) programmable, 24 V 0...100 mA with PLC, impedance 3500 Ohm
Acceleration and deceleration ramps	Linear adjustable separately from 0.1 to 999.9 s S, U or customized
Braking to standstill	By DC injection
Protection type	Input phase breaks drive Line supply overvoltage and undervoltage safety circuits drive Line supply phase loss safety function, for three phases supply drive Motor phase breaks drive

	Overcurrent between output phases and earth (on power up only) drive Overheating protection drive Short-circuit between motor phases drive Thermal protection motor
Insulation resistance	>= 500 mOhmat 500 V DC for 1 minute
Local signalling	1 LED red drive voltage Four 7-segment display units CANopen bus status
Time constant	5 ms for reference change
Frequency resolution	Analog input 0.1...100 Hz Display unit 0.1 Hz
Type of connector	1 RJ45 Modbus/CANopen
Physical interface	RS485 multidrop serial link
Transmission frame	RTU
Transmission rate	10, 20, 50, 125, 250, 500 kbps or 1 Mbps CANopen 4800, 9600 or 19200 bps Modbus
Number of addresses	1...247 Modbus 1...127 CANopen
Number of drive	127 CANopen 31 Modbus
Marking	CE
Operating position	Vertical +/- 10 degree
Outer dimension	330 x 245 x 190 mm
Height	12.97 in (329.5 mm)
Width	9.65 in (245 mm)
Depth	7.56 in (192 mm)
Product weight	23.15 lb(US) (10.5 kg)

Environment

Dielectric strength	2040 V DC between earth and power terminals 2880 V AC between control and power terminals
Electromagnetic compatibility	Electrical fast transient/burst immunity test conforming to IEC 61000-4-4 level 4 Electrostatic discharge immunity test conforming to IEC 61000-4-2 level 3 Radiated radio-frequency electromagnetic field immunity test conforming to IEC 61000-4-3 level 3 1.2/50 µs - 8/20 µs surge immunity test conforming to IEC 61000-4-5 level 3
Standards	IEC 61800-3 IEC 61800-5-1
Product certifications	CSA C-Tick DNV GOST NOM UL
Pollution degree	2
Protective treatment	TC
Vibration resistance	1.5 mm (f = 3...13 Hz) conforming to EN/IEC 60068-2-6 1 gn (f = 13...150 Hz) conforming to EN/IEC 60068-2-6
Shock resistance	15 gn 11 ms conforming to EN/IEC 60068-2-27
Relative humidity	5...95 % without condensation conforming to IEC 60068-2-3 5...95 % without dripping water conforming to IEC 60068-2-3
Ambient air temperature for storage	-13...158 °F (-25...70 °C)
Ambient air temperature for operation	14...122 °F (-10...50 °C) without derating with protective cover on top of the drive 14...140 °F (-10...60 °C) with derating factor without protective cover on top of the drive
Operating altitude	<= 3280.84 ft (1000 m) without derating 3280.84...9842.52 ft (1000...3000 m) with current derating 1 % per 100 m

Ordering and shipping details

Category	22153 - ATV312 / ATV32 (10 THRU 30 HP)
Discount Schedule	CP4B
GTIN	00785901689386

Nbr. of units in pkg.	1
Package weight(Lbs)	25.960000000000001
Returnability	Y
Country of origin	ID

Offer Sustainability

Sustainable offer status	Green Premium product
RoHS (date code: YYWW)	Compliant - since 0913 - Schneider Electric declaration of conformity Schneider Electric declaration of conformity
REACh	Reference contains SVHC above the threshold - Go to CaP for more details Go to CaP for more details
Product environmental profile	Available Product Environmental Profile
Product end of life instructions	Available End of life manual

Contractual warranty

Warranty period	18 months

Altivar 312

Variable speed drives for asynchronous motors

Installation manual

04/2009

BBV46391

www.schneider-electric.com

Schneider Electric

Contents

Important Information 4
Before you begin 5
Documentation structure 7
Steps for setting up 8
Setup - Preliminary recommendations 9
Drive ratings 10
Dimensions and weights 12
Mounting 14
Wiring 17
Check list 29
Maintenance 30
Short-circuit rating and branch circuit protection 31

Important Information

NOTICE

Read these instructions carefully, and look at the equipment to become familiar with the device before trying to install, operate, or maintain it. The following special messages may appear throughout this documentation or on the equipment to warn of potential hazards or to call attention to information that clarifies or simplifies a procedure.

The addition of this symbol to a Danger or Warning safety label indicates that an electrical hazard exists, which will result in personal injury if the instructions are not followed.

This is the safety alert symbol. It is used to alert you to potential personal injury hazards. Obey all safety messages that follow this symbol to avoid possible injury or death.

⚠ DANGER

DANGER indicates an imminently hazardous situation, which, if not avoided, **will result** in death or serious injury.

⚠ WARNING

WARNING indicates a potentially hazardous situation, which, if not avoided, **can result** in death, serious injury or equipment damage.

⚠ CAUTION

CAUTION indicates a potentially hazardous situation, which, if not avoided, **can result** in injury or equipment damage.

CAUTION

CAUTION, used without the safety alert symbol, indicates a potentially hazardous situation which, if not avoided, **can result** in equipment damage.

PLEASE NOTE

The word "drive" as used in this manual refers to the controller portion of the adjustable speed drive as defined by NEC.

Electrical equipment should be installed, operated, serviced, and maintained only by qualified personnel. No responsibility is assumed by Schneider Electric for any consequences arising out of the use of this product.

© 2009 Schneider Electric. All Rights Reserved

Before you begin

Read and understand these instructions before performing any procedure with this drive.

⚠ ⚠ DANGER

HAZARD OF ELECTRIC SHOCK, EXPLOSION, OR ARC FLASH

- Read and understand this manual before installing or operating the Altivar 312 drive. Installation, adjustment, repair, and maintenance must be performed by qualified personnel.
- The user is responsible for compliance with all international and national electrical code requirements with respect to grounding of all equipment.
- Many parts of this drive, including the printed circuit boards, operate at the line voltage. DO NOT TOUCH. Use only electrically insulated tools.
- DO NOT touch unshielded components or terminal strip screw connections with voltage present.
- DO NOT short across terminals PA/+ and PC/– or across the DC bus capacitors.
- Before servicing the drive:
  - Disconnect all power, including external control power that may be present.
  - Place a “DO NOT TURN ON” label on all power disconnects.
  - Lock all power disconnects in the open position.
  - WAIT 15 MINUTES to allow the DC bus capacitors to discharge. Then follow the “Bus Voltage Measurement Procedure” page 16 to verify that the DC voltage is less than 42 V. The drive LEDs are not indicators of the absence of DC bus voltage.
- Install and close all covers before applying power or starting and stopping the drive.

Failure to follow these instructions will result in death or serious injury.

⚠ DANGER

UNINTENDED EQUIPMENT OPERATION

- Read and understand this manual before installing or operating the Altivar 312 drive.
- Any changes made to the parameter settings must be performed by qualified personnel.

Failure to follow these instructions will result in death or serious injury.

⚠ WARNING

DAMAGED DRIVE EQUIPMENT

Do not operate or install any drive or drive accessory that appears damaged.

Failure to follow these instructions can result in death, serious injury, or equipment damage.

⚠ WARNING

LOSS OF CONTROL

- The designer of any control scheme must consider the potential failure modes of control paths and, for certain critical control functions, provide a means to achieve a safe state during and after a path failure. Examples of critical control functions are emergency stop and overtravel stop.
- Separate or redundant control paths must be provided for critical control functions.
- System control paths may include communication links. Consideration must be given to the implications of unanticipated transmission delays or failures of the link.[a]

Failure to follow these instructions can result in death, serious injury, or equipment damage.

a. For additional information, refer to NEMA ICS 1.1 (latest edition), “Safety Guidelines for the Application, Installation, and Maintenance of Solid State Control” and to NEMA ICS 7.1 (latest edition), “Safety Standards for Construction and Guide for Selection, Installation and Operation of Adjustable-Speed Drive Systems.”

⚠ CAUTION

INCOMPATIBLE LINE VOLTAGE

Before turning on and configuring the drive, ensure that the line voltage is compatible with the supply voltage range shown on the drive nameplate. The drive may be damaged if the line voltage is not compatible.

Failure to follow these instructions can result in injury or equipment damage.

CAUTION

RISK OF DAMAGE TO THE MOTOR

The use of external overload protection is required under the following conditions:
- Repowering up the product since there is no motor thermal state memory.
- Running multiple motors.
- Running motors rated at less than 0.2 times the nominal drive current.
- Using motor switching.

Failure to follow these instructions can result in equipment damage

Documentation structure

The following Altivar 312 technical documents are available on the Schneider Electric website (www.schneider-electric.com) as well as on DVD-ROM (reference VW3A8200).

Installation manual

This manual describes how to install and wire the drive.

Programming manual

This manual describes the functions, parameters and use of the drive terminal (integrated display terminal, optional graphic display terminal and optional remote terminal).

Simplified manual

This manual is an extract from programming and installation manual. This manual is delivered with the drive.

Quick Start

The Quick Start describes how to wire and configure the drive to start motor quickly and simply for simple applications. This document is delivered with the drive.

Communication manuals: Modbus, CANopen, ...

These manual describes the assembly, connection to the bus or network, signaling, diagnostics, and configuration of the communication-specific parameters.
They also describe the protocol communication services.

Communication variables guide

The Communication variables manual defines the drive control processes and the drive variables which can be accessed by the communication buses: Modbus, CANopen, ...

INSTALLATION

1. Receive and inspect the drive

- ☐ Check that the catalog number printed on the label is the same as that on the purchase order.
- ☐ Remove the Altivar from its packaging and check that it has not been damaged in transit.

2. Check the line voltage

- ☐ Check that the voltage range of the drive is compatible with the line voltage (see pages 10 and 11).

Steps **2** to **4** must be performed with the **power off**.

3. Mount the drive

- ☐ Mount the drive in accordance with the instructions in this document (see page 14).
- ☐ Install any options required (see option documentation).

4. Wire the drive (see page 17)

- ☐ Connect the motor, ensuring that its connections correspond to the voltage.
- ☐ Connect the line supply, after making sure that the power is off.
- ☐ Connect the control part.

PROGRAMMING

5. Please refer to the programming manual.

Prior to switching on the drive

⚠ DANGER

UNINTENDED EQUIPMENT OPERATION

Ensure that all logic inputs are inactive to help prevent an accidental startup.

Failure to follow these instructions will result in death or serious injury.

Prior to configuring the drive

⚠ DANGER

UNINTENDED EQUIPMENT OPERATION

- Read and understand this manual before installing or operating the Altivar 312 drive.
- Any changes made to the parameter settings must be performed by qualified personnel.
- Ensure that all logic inputs are inactive to help prevent an accidental startup when modifying parameters.

Failure to follow these instructions will result in death or serious injury.

Line contactor

CAUTION

RISK OF DAMAGE TO THE DRIVE

- Avoid operating the contactor frequently to avoid premature aging of the filter capacitors.
- Power cycling must be more than 60 seconds.

Failure to follow these instructions can result in equipment damage.

Drive ratings

Single phase supply voltage: 200…240 V 50/60 Hz

For three phase output 200/240 V motors

Motor		Line supply (input)					Drive (output)		Reference	Size
Power indicated on plate (1)		Max. current line (2)		Apparent power	Max. inrush current (3)	Power dissipated at nominal current	Nominal current (1)	Max. transient current (1) (4)		
		at 200 V	at 240 V							
kW	HP	A	A	kVA	A	W	A	A		
0.18	0.25	3.0	2.5	0.6	10	24	1.5	2.3	ATV312H018M2(5)	3
0.37	0.5	5.3	4.4	1.0	10	41	3.3	5.0	ATV312H037M2(5)	3
0.55	0.75	6.8	5.8	1.4	10	46	3.7	5.6	ATV312H055M2(5)	4
0.75	1	8.9	7.5	1.8	10	60	4.8	7.2	ATV312H075M2(5)	4
1.1	1.5	12.1	10.2	2.4	19	74	6.9	10.4	ATV312HU11M2(5)	6
1.5	2	15.8	13.3	3.2	19	90	8.0	12.0	ATV312HU15M2(5)	6
2.2	3	21.9	18.4	4.4	19	123	11.0	16.5	ATV312HU22M2(5)	7

Three phase supply voltage: 200…240 V 50/60 Hz

For three phase output 200/240 V motors

Motor		Line supply (input)					Drive (output)		Reference	Size
Power indicated on plate (1)		Max. current line (2)		Apparent power	Max. inrush current (3)	Power dissipated at nominal current	Nominal current (1)	Max. transient current (1) (4)		
		at 200 V	at 240 V							
kW	HP	A	A	kVA	A	W	A	A		
0.18	0.25	2.1	1.9	0.7	10	23	1.5	2.3	ATV312H018M3	1
0.37	0.5	3.8	3.3	1.3	10	38	3.3	5.0	ATV312H037M3	1
0.55	0.75	4.9	4.2	1.7	10	43	3.7	5.6	ATV312H055M3	2
0.75	1	6.4	5.6	2.2	10	55	4.8	7.2	ATV312H075M3	2
1.1	1.5	8.5	7.4	3.0	10	71	6.9	10.4	ATV312HU11M3	5
1.5	2	11.1	9.6	3.8	10	86	8.0	12.0	ATV312HU15M3	5
2.2	3	14.9	13.0	5.2	10	114	11.0	16.5	ATV312HU22M3	6
3	3	19.1	16.6	6.6	19	146	13.7	20.6	ATV312HU30M3	7
4	5	24	21.1	8.4	19	180	17.5	26.3	ATV312HU40M3	7
5.5	7.5	36.8	32.0	12.8	23	292	27.5	41.3	ATV312HU55M3	8
7.5	10	46.8	40.9	16.2	23	388	33.0	49.5	ATV312HU75M3	8
11	15	63.5	55.6	22.0	93	477	54.0	81.0	ATV312HD11M3	9
15	20	82.1	71.9	28.5	93	628	66.0	99.0	ATV312HD15M3	9

(1) These power ratings and currents are for a maximum ambient temperature of 50°C and a switching frequency of 4 kHz in continuous operation.The switching frequency is adjustable from 2 to 16 kHz.
Above 4 kHz, the drive will reduce the switching frequency in the event of excessive temperature rise. The temperature rise is controlled by a sensor in the power module. Nonetheless, the nominal drive current should be derated if operation above 4 kHz needs to be continuous.
Derating curves are shown on page 15 as a function of switching frequency, ambient temperature and mounting conditions.
(2) Current on a line supply with the "Max. prospective line Isc" indicated.
(3) Peak current on power-up, for the max. voltage (240 V + 10%).
(4) For 60 seconds.
(5) These references can be ordered without terminal board in order to integrate an optionnal communication board. Add a B at the end of the reference. For example, ATV312HU11M2 becomes ATV312HU11M2B.

Three phase supply voltage: 380…500 V 50/60 Hz

For three phase output 380/500 V motors

Motor		Line supply (input)					Drive (output)		Reference	Size
Power indicated on plate (1)		Max. current line (2)		Apparent power	Max. inrush current (3)	Power dissipated at nominal current	Nominal current (1)	Max. transient current (1) (4)		
		at 380 V	at 500 V							
kW	HP	A	A	kVA	A	W	A	A		
0.37	0.5	2.2	1.7	1.5	10	32	1.5	2.3	ATV312H037N4(5)	6
0.55	0.75	2.8	2.2	1.8	10	37	1.9	2.9	ATV312H055N4(5)	6
0.75	1	3.6	2.7	2.4	10	41	2.3	3.5	ATV312H075N4(5)	6
1.1	1.5	4.9	3.7	3.2	10	48	3.0	4.5	ATV312HU11N4(5)	6
1.5	2	6.4	4.8	4.2	10	61	4.1	6.2	ATV312HU15N4(5)	6
2.2	3	8.9	6.7	5.9	10	79	5.5	8.3	ATV312HU22N4(5)	7
3	3	10.9	8.3	7.1	10	125	7.1	10.7	ATV312HU30N4(5)	7
4	5	13.9	10.6	9.2	10	150	9.5	14.3	ATV312HU40N4(5)	7
5.5	7.5	21.9	16.5	15.0	30	232	14.3	21.5	ATV312HU55N4(5)	8
7.5	10	27.7	21.0	18.0	30	269	17.0	25.5	ATV312HU75N4(5)	8
11	15	37.2	28.4	25.0	97	397	27.7	41.6	ATV312HD11N4(5)	9
15	20	48.2	36.8	32.0	97	492	33.0	49.5	ATV312HD15N4(5)	9

Three phase supply voltage: 525…600 V 50/60 Hz

For three phase output 525/600 V motors

Motor		Line supply (input)					Drive (output)		Reference	Size
Power indicated on plate (1)		Max. current line (2)		Apparent power	Max. inrush current (3)	Power dissipated at nominal current	Nominal current (1)	Max. transient current (1) (4)		
		at 525 V	at 600 V							
kW	HP	A	A	kVA	A	W	A	A		
0.75	1	2.8	2.4	2.5	12	36	1.7	2.6	ATV312H075S6(6)	6
1.5	2	4.8	4.2	4.4	12	48	2.7	4.1	ATV312HU15S6(6)	6
2.2	3	6.4	5.6	5.8	12	62	3.9	5.9	ATV312HU22S6(6)	7
4	5	10.7	9.3	9.7	12	94	6.1	9.2	ATV312HU40S6(6)	7
5.5	7.5	16.2	14.1	15.0	36	133	9.0	13.5	ATV312HU55S6(6)	8
7.5	10	21.3	18.5	19.0	36	165	11.0	16.5	ATV312HU75S6(6)	8
11	15	27.8	24.4	25.0	117	257	17.0	25.5	ATV312HD11S6(6)	9
15	20	36.4	31.8	33.0	117	335	22.0	33.0	ATV312HD15S6(6)	9

(1) These power ratings and currents are for a maximum ambient temperature of 50°C and a switching frequency of 4 kHz in continuous operation. The switching frequency is adjustable from 2 to 16 kHz.
Above 4 kHz, the drive will reduce the switching frequency in the event of excessive temperature rise. The temperature rise is controlled by a sensor in the power module. Nonetheless, the nominal drive current should be derated if operation above 4 kHz needs to be continuous.
Derating curves are shown on page 15 as a function of switching frequency, ambient temperature and mounting conditions.
(2) Current on a line supply with the "Max. prospective line Isc" indicated.
(3) Peak current on power-up, for the max. voltage (500 V + 10%, 600 V + 10%).
(4) For 60 seconds.
(5) These references can be ordered without terminal board in order to integrate an optionnal communication board. Add a B at the end of the reference. For example, ATV312H037N4 becomes ATV312H037N4B.
(6) The use of an AC choke, which must be ordered separately (please refer to the catalog), is mandatory on these drives

Dimensions and weights

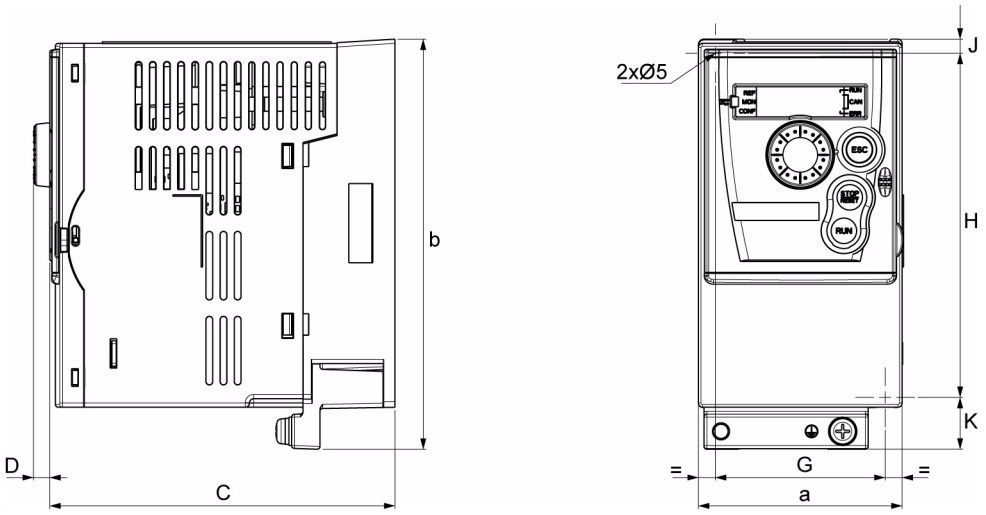

ATV312H	a mm (in.)	b mm (in.)	C mm (in.)	D mm (in.)	G mm (in.)	H mm (in.)	J mm (in.)	K mm (in.)	Ø mm (in.)	Weight kg (lb)
018M3, 037M3	72 (2.83)	145 (5.70)	122 (4.80)	6 (0.24)	60 (2.36)	121.5 (4.76)	2 x 5 (2x0.2)	18.5 (0.73)	2 x 5 (2x0.2)	0.9 (1.98)
055M3, 075M3	72 (2.83)	145 (5.70)	132 (5.19)	6 (0.24)	60 (2.36)	121.5 (4.76)	2 x 5 (2x0.2)	18.5 (0.73)	2 x 5 (2x0.2)	0.9 (1.98)
018M2, 037M2	72 (2.83)	145 (5.70)	132 (5.19)	6 (0.24)	60 (2.36)	121.5 (4.76)	2 x 5 (2x0.2)	18.5 (0.73)	2 x 5 (2x0.2)	1.05 (2.31)
055M2, 075M2	72 (2.83)	145 (5.70)	142 (5.59)	6 (0.24)	60 (2.36)	121.5 (4.76)	2 x 5 (2x0.2)	18.5 (0.73)	2 x 5 (2x0.2)	1.05 (2.31)

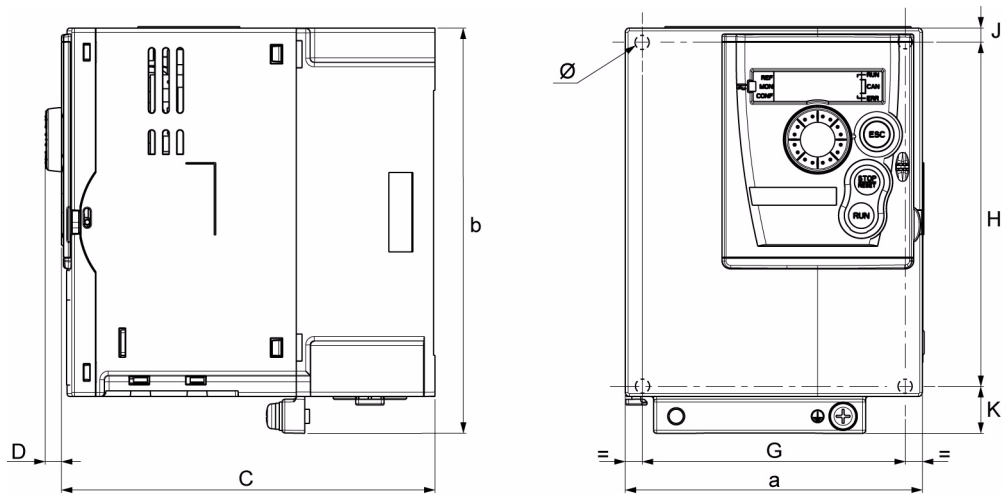

ATV312H	a mm (in.)	b mm (in.)	C mm (in.)	D mm (in.)	G mm (in.)	H mm (in.)	J mm (in.)	K mm (in.)	Ø mm (in.)	Weight kg (lb)
U1●M3	105 (4.13)	143 (5.63)	132 (5.19)	6 (0.24)	93 (3.66)	121.5 (4.76)	5 (0.2)	16.5 (0.65)	2 x 5 (2x0.2)	1.25 (2.76)
U1●M2, U22M3, 037N4 to U15N4 075S6, U15S6●	107 (4.21)	143 (5.63)	152 (5.98)	6 (0.24)	93 (3.66)	121.5 (4.76)	5 (0.2)	16.5 (0.65)	2 x 5 (2x0.2)	1.35 (2.98)
U22M2, U●0M3, U22N4 to U40N4, U22S6, U40S6	142 (5.59)	184 (7.24)	152 (5.98)	6 (0.24)	126 (4.96)	157 (6.18)	6.5 (0.26)	20.5 (0.81)	4 x 5 (4x0.2)	2.35 (5.18)

Dimensions and weights (continued)

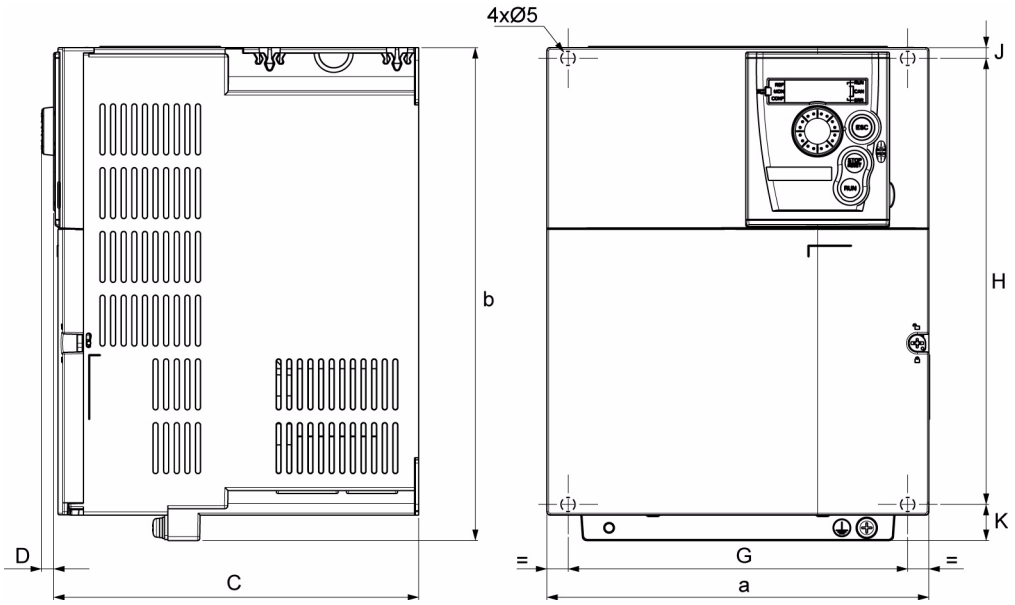

ATV312H	a mm (in.)	b mm (in.)	C mm (in.)	D mm (in.)	G mm (in.)	H mm (in.)	J mm (in.)	K mm (in.)	Ø mm (in.)	Weight kg (lb)
U55M3, U75M3, U55N4, U75N4, U55S6, U75S6	180 (7.09)	232 (9.13)	172 (6.77)	6 (0.24)	160 (6.30)	210 (8.27)	5 (0.2)	17 (0.67)	4 x 5 (4x0.2)	4.70 (10.36)

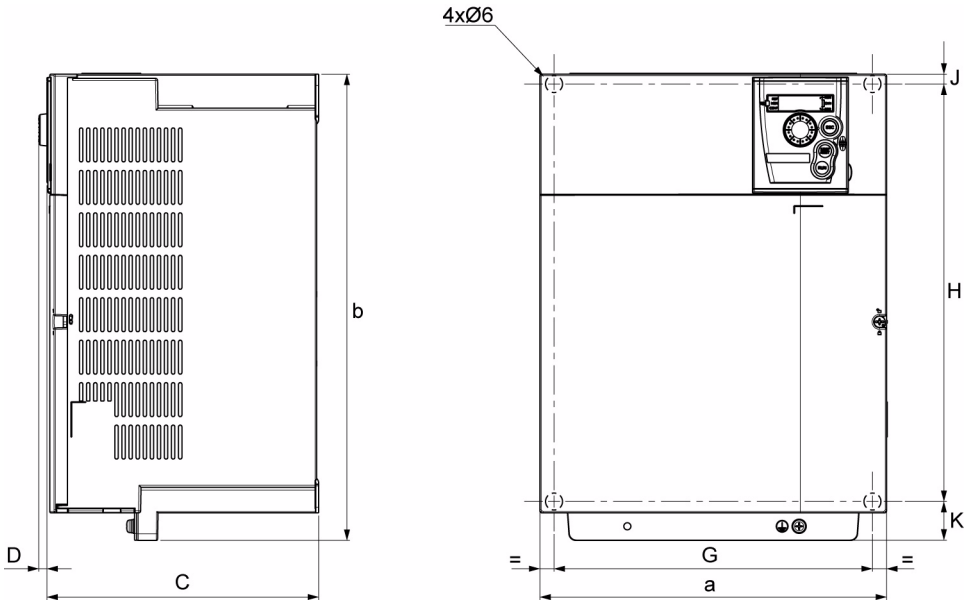

ATV312H	a mm (in.)	b mm (in.)	C mm (in.)	D mm (in.)	G mm (in.)	H mm (in.)	J mm (in.)	K mm (in.)	Ø mm (in.)	Weight kg (lb)
D1●M3, D1●N4, D1●S6	245 (9.65)	329.5 (12.97)	192 (7.56)	6 (0.24)	225 (8.86)	295 (11.61)	7 (0.28)	27.5 (1.08)	4 x 6 (4x0.24)	9 (19.84)

Mounting

Mounting and temperature conditions

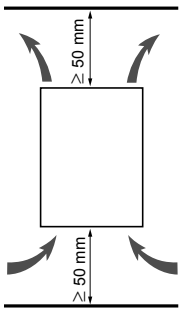

Install the unit vertically, at ± 10°.
Do not place it close to heating elements.
Leave sufficient free space so that the air required for cooling purposes can circulate from the bottom to the top of the unit.

Free space in front of unit: 10 mm (0.39 in.) minimum.

When IP20 protection is adequate, we recommend that the vent cover on the top of the drive be removed, as shown below.

Removing the vent cover

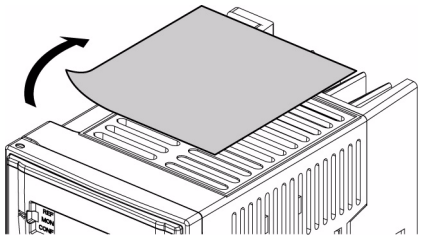

Example ATV312HU11M3

Mounting types

3 types of mounting are possible:

Type A mounting:

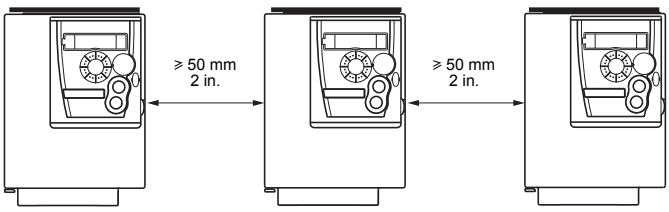

Free space ≥ 50 mm (2 in.) on each side, with vent cover fitted. Mounting type A is suitable for drive operation at surrounding air temperature less or equal to 50°C (122°F).

Type B mounting:

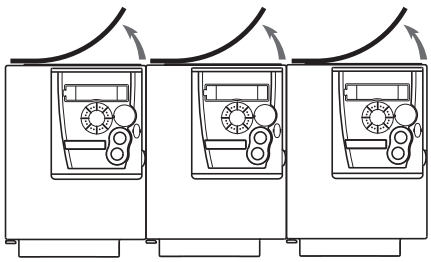

Drives mounted side-by-side, vent cover should be removed (the degree of protection becomes IP20).

Type C mounting:

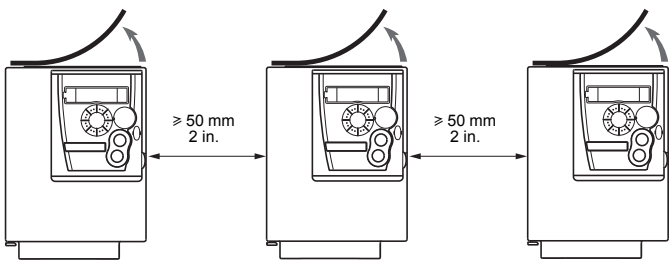

Free space ≥ 50 mm (2 in.) on each side. Vent cover should be removed for operation at surrounding air temperature above 50°C (122°F). The degree of protection becomes IP20

Note: For switching frequencies above 4 kHz and derating conditions, please refer to the derating curves for guidelines.

Derating curves

Derating curves for the drive current In as a function of the temperature, switching frequency and type of mounting.

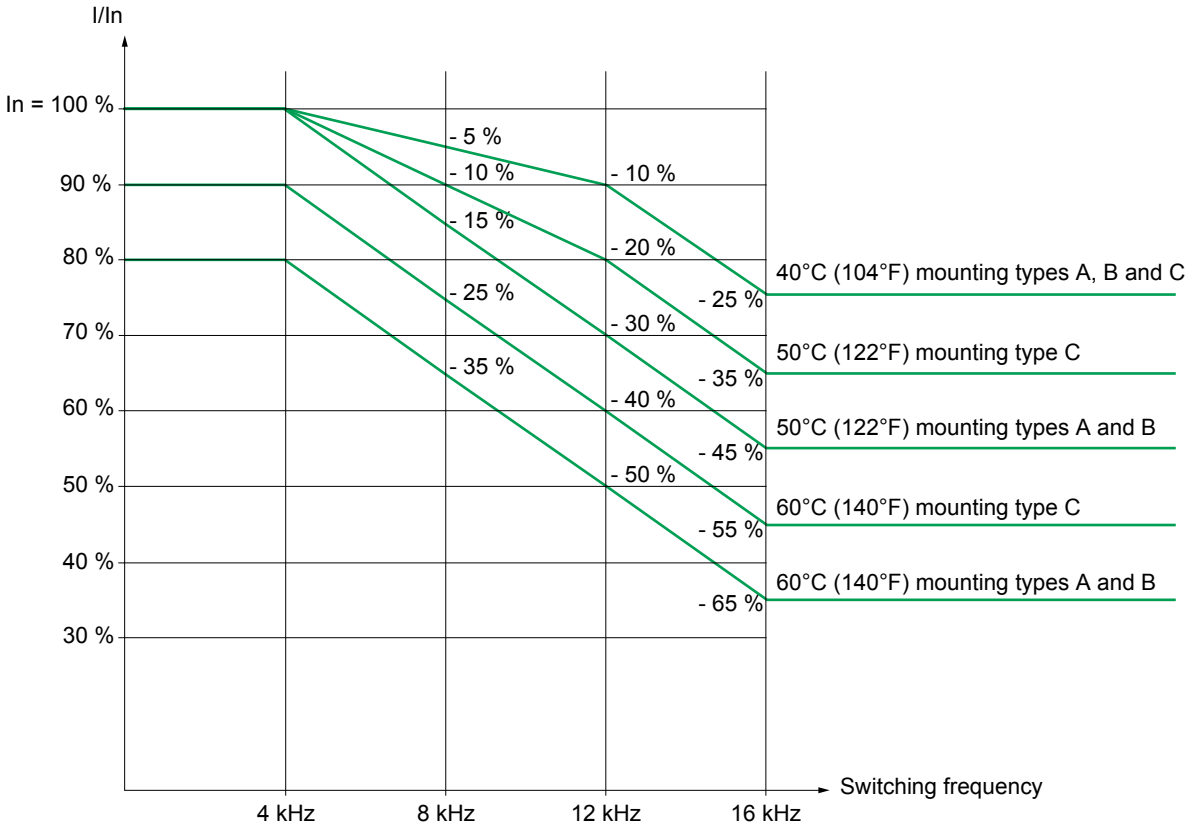

For intermediate temperatures (e.g. 55°C; 131 °F), interpolate between 2 curves.

Flow of air

If you are installing the drives in enclosures, make provision for a flow of air at least equal to the value given in the table below for each drive.

ATV312H	Flow rate	
	m^3/hour	ft^3/min
018M2, 037M2, 055M2, 018M3, 037M3, 055M3, 037N4, 055N4, 075N4, U11N4 075S6, U15S6	18	11
075M2, U11M2, U15M2 075M3, U11M3, U15M3 U15N4, U22N4 U22S6, U40S6	33	19
U22M2, U22M3, U30M3, U40M3 U30N4, U40N4 U55S6, U75S6	93	55
U55M3 U55N4, U75N4 D11S6	102	60
U75M3, D11M3, D11N4, D15N4 D15S6	168	99
D15M3	216	127

Installing the EMC plates

EMC mounting plate: Supplied with the drive

Fix the EMC equipotentiality mounting plate to the holes in the ATV312 heatsink using the 2 screws supplied, as shown in the drawings below.

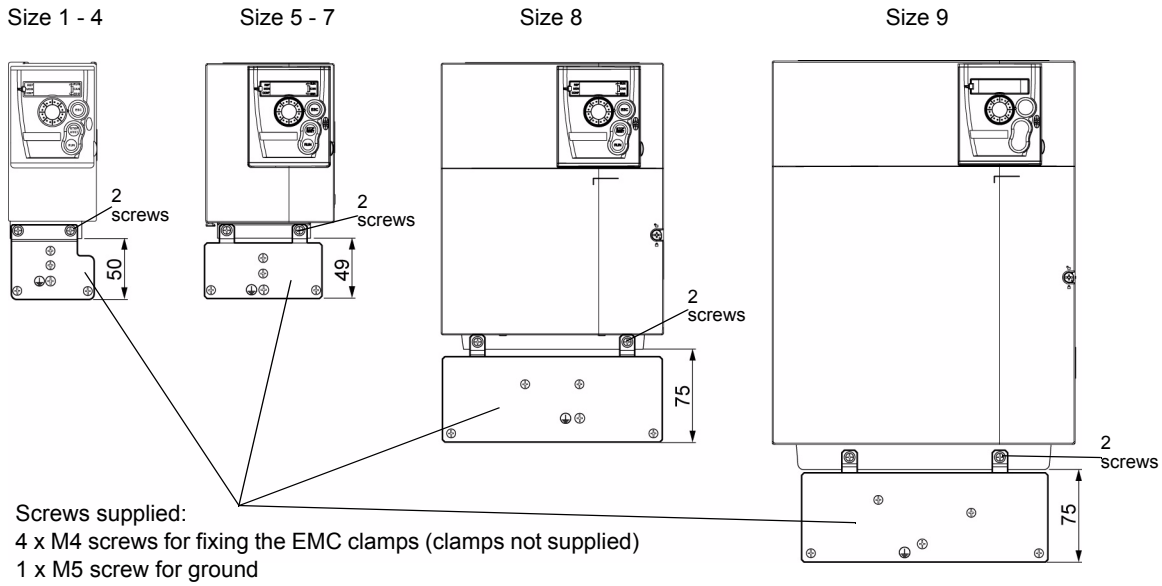

Screws supplied:
4 x M4 screws for fixing the EMC clamps (clamps not supplied)
1 x M5 screw for ground

ATV312H	Size
018M3, 037M3	1
055M3, 075M3	2
018M2, 037M2	3
055M2, 075M2	4
U11M3, U15M3	5
U11M2, U15M2, U22M3, 037N4, 055N4, 075N4, U11N4, U15N4, 075S6, U15S6	6

ATV312H	Size
U22M2, U30M3, U40M3, U22N4, U30N4, U40N4, U22S6, U40S6	7
U55M3, U75M3, U55N4, U75N4, U55S6, U75S6	8
D11M3, D15M3, D11N4, D15N4, D11S6, D15S6	9

Bus voltage measurement procedure

⚠ ⚠ DANGER

HAZARD OF ELECTRIC SHOCK, EXPLOSION, OR ARC FLASH

Read and understand the precautions in “Before you begin” page 5 before performing this procedure.

Failure to follow these instructions will result in death or serious injury.

The DC bus voltage can exceed 933 Vdc. Use a properly rated voltage-sensing device when performing this procedure. To measure the DC bus voltage:

1. Disconnect all power.
2. Wait 15 minutes to allow the DC bus to discharge.
3. Measure the voltage of the DC bus between the PA/+ and PC/– terminals to ensure that the voltage is less than 42 Vdc.
4. If the DC bus capacitors do not discharge completely, contact your local Schneider Electric representative. Do not repair or operate the drive.

Recommendations

Power and circuit protection

The drive must be grounded to conform with the regulations concerning high leakage currents (over 3.5 mA).

Where local and national codes require upstream protection by means of a residual current device, use a type A device for single-phase drives and a type B device for three-phase drives as defined in the IEC Standard 60755.
Choose a suitable model integrating:

- High frequency current filtering,
- A time delay that helps to prevent tripping caused by the load from stray capacitance on power-up.
  The time delay is not possible for 30 mA devices; in this case, choose devices with immunity against nuisance tripping.

If the installation includes several drives, provide one "residual current device" per drive.

Keep the power cables separate from circuits in the installation with low-level signals (detectors, PLCs, measuring apparatus, video, telephone).

If you are using cables longer than 50 m (164 ft) between the drive and the motor, add output filters (please refer to the catalogue).

Control

Keep the control circuits away from the power cables. For control and speed reference circuits, we recommend using shielded twisted cables with a pitch of between 25 and 50 mm (1 and 2 in.), connecting the shielding to ground at each end.

Equipment Grounding

Ground the drive according to local and national code requirements. A minimum wire size of 10 mm² (6 AWG) may be required to meet standards limiting leakage current.

⚠ ⚠ DANGER

HAZARD OF ELECTRIC SHOCK, EXPLOSION, OR ARC FLASH

- The drive panel must be properly grounded before power is applied.
- Use the provided ground connecting point as shown in the figure below.

Failure to follow these instructions will result in death or serious injury.

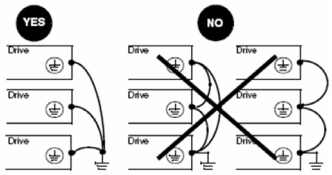

- Ensure that the resistance of the ground is one ohm or less.
- When grounding several drives, you must connect each one directly, as shown in the figure to the left.
- Do not loop the ground cables or connect them in series.

⚠ WARNING

IMPROPER WIRING PRACTICES

- The ATV312 drive will be damaged if input line voltage is applied to the output terminals (U/T1,V/T2,W/T3).
- Check the power connections before energizing the ATV312 drive.
- If replacing another drive, verify that all wiring connections to the ATV312 drive comply with wiring instructions in this manual page 29.

Failure to follow these instructions can result in death, serious injury, or equipment damage.

⚠ WARNING

INADEQUATE OVERCURRENT PROTECTION

- Overcurrent protective devices must be properly coordinated.
- The Canadian Electrical Code and the National Electrical Code require branch circuit protection. Use the fuses recommended in the installation manual.
- Do not connect the drive to a power feeder whose short-circuit capacity exceeds the drive short-circuit current rating listed in this manual page 29.

Failure to follow these instructions can result in death, serious injury, or equipment damage.

General wiring diagram

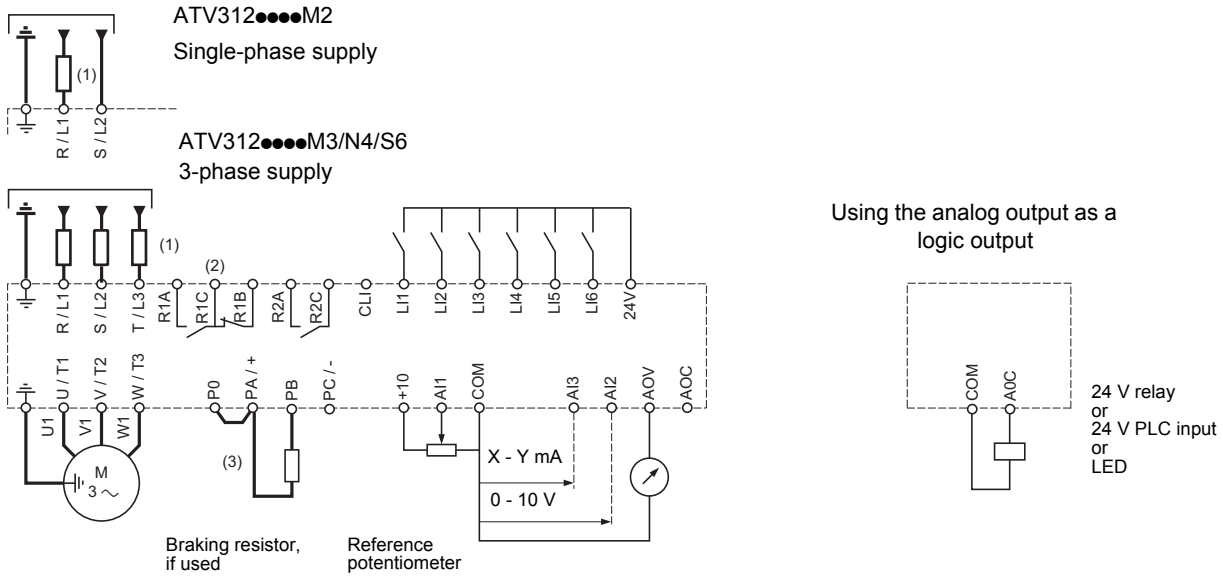

(1) Line choke, if used (single phase or 3-phase)
(2) Fault relay contacts, for remote indication of the drive status
(3) If a braking resistor is connected, set [Dec ramp adapt.] (brA) parameter to yes (refer to the progamming manual).

Note 1: Use interference suppressors on all inductive circuits near the drive or coupled to the same circuit (relays, contactors, solenoid valves, etc).

Note 2: This diagram is for the standard ATV312 products. Optional communication cards may change the control wiring of the product. Please see the associated documentation for the option cards for details.

Choice of associated components:
Please refer to the catalogue.

Logic input switch

This switch (1) assigns the link to 0V, 24 V or "floating":

Using volt-free contacts

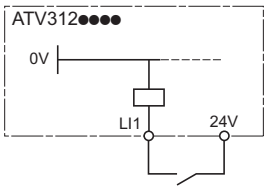

Switch in «Source» position (factory setting)

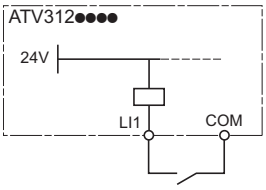

Switch in «Sink» position

Using PLC transistor output

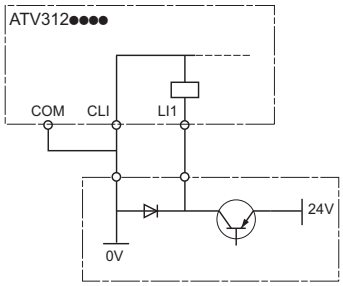

Switch in CLI position

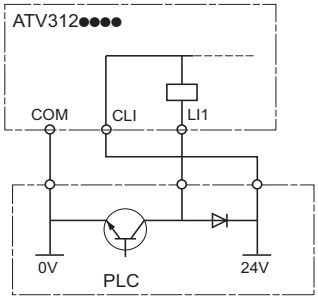

(1) See page 24 to locate the switch on the terminal board.

⚠ DANGER

UNINTENDED EQUIPMENT OPERATION

- Prevent accidental grounding of logic inputs configured for sink logic. Accidental grounding can result in unintended activation of drive functions.
- Protect the signal conductors against damage that could result in unintentional conductor grounding.
- Follow NFPA 79 and EN 60204 guidelines for proper control circuit grounding practices.

Failure to follow these instructions will result in death or serious injury.

Power terminals

Access to the power terminals

To access the terminals, open the cover as shown in the example below.

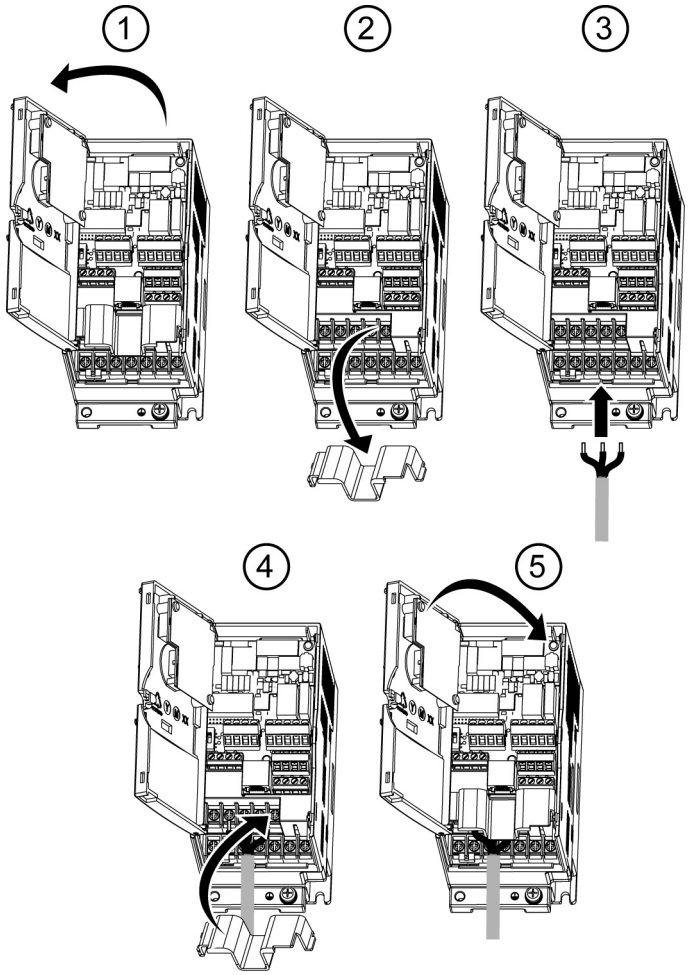

⚠ ⚠ DANGER

HAZARD OF ELECTRIC SHOCK, EXPLOSION, OR ARC FLASH.

Replace the cover plate on the terminals and close the door before applying power.

Failure to follow these instructions will result in death or serious injury.

Functions of the power terminals

Terminal	Function	For Altivar 312
⏚	Ground terminal	All ratings
R/L1 - S/L2	Power supply	ATV312●●●●M2
R/L1 - S/L2 - T/L3		ATV312●●●●M3 ATV312●●●●N4 ATV312●●●●S6
PO	DC bus + polarity	All ratings
PA/+	Output to braking resistor (+ polarity)	All ratings
PB	Output to braking resistor	All ratings
PC/-	DC bus - polarity	All ratings
U/T1 - V/T2 - W/T3	Outputs to the motor	All ratings

Arrangement and caracteristics of the power terminals

CAUTION

RISK OF DAMAGE TO THE DRIVE

- Never remove the link between PO and PA/+.
- The PO and PA/+ terminal screws must always be fully tightened as a high current flows through the link.

Failure to follow these instructions can result in equipment damage

ATV312H 018M3 ... 075M3

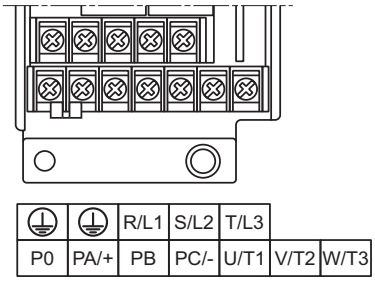

ATV312H	Applicable wire size (1) mm² (AWG)	Recommended wire size (2) mm² (AWG)	Tightening torque N·m (lb.in)
018M3, 037M3 055M3, 075M3	2.5 (14)	2.5 (14)	0.8 (7.1)

ATV312H 018M2 ...075M2

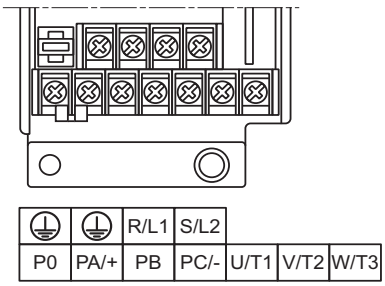

ATV312H	Applicable wire size (1) mm² (AWG)	Recommended wire size (2) mm² (AWG)	Tightening torque N·m (lb.in)
018M2, 037M2 055M2, 075M2	2.5 (14)	2.5 (14)	0.8 (7.1)

(1) The value in bold corresponds to the minimum wire gauge to permit secureness.
(2) 75°C (167 °F) copper cable (minimum wire size for rated use).

ATV312H U11M3 ...U40M3
ATV312H 037N4 ... U40N4
ATV312H 075S6 ... U40S6

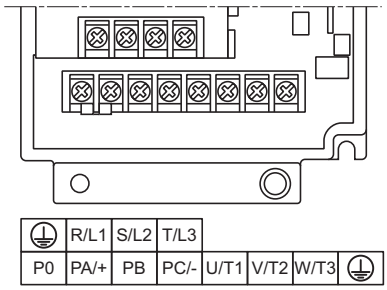

ATV312H	Applicable wire size (1) mm² (AWG)	Recommended wire size (2) mm² (AWG)	Tightening torque N·m (lb.in)
U11M3, U15M3 037N4, 055N4, 075N4, U11N4, U15N4 075S6, U15S6	**2.5** to 6 (**14** to 10)	2.5 (14)	0.8 (7.1)
U22M3	**2.5** to 6 (**12** to 10)	3.5 (12)	1.2 (10.7)
U30M3, U40M3	6 (10)	6 (10)	1.2 (10.7)
U22N4, U30N4 U22S6, U40S6	**2.5** to 6 (**14** to 10)	2.5 (14)	1.2 (10.7)
U40N4	**4** to 6 (**12** to 10)	4 (12)	1.2 (10.7)

ATV312H U11M2 ... U22M2

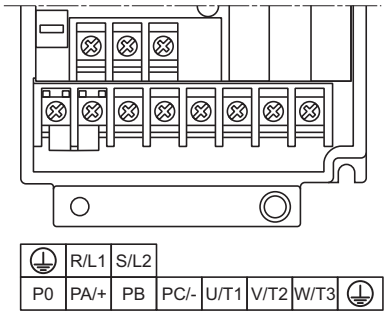

ATV312H	Applicable wire size (1) mm² (AWG)	Recommended wire size (2) mm² (AWG)	Tightening torque N·m (lb.in)
U11M2, U15M2	**2.5** to 6 (**12** to 10)	3.5 (12)	1.2 (10.7)
U22M2	**4** to 6 (**12** to 10)	4 (12)	1.2 (10.7)

ATV312H U55M3, U75M3
ATV312H U55N4, U75N4
ATV312H U55S6, U75S6

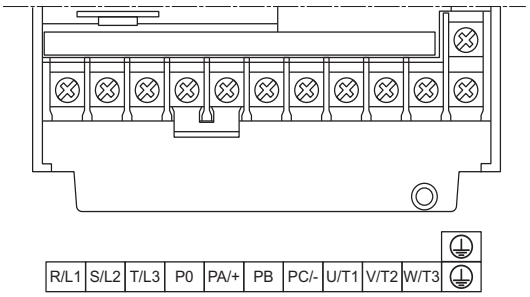

ATV312H	Applicable wire size (1) mm² (AWG)	Recommended wire size (2) mm² (AWG)	Tightening torque N·m (lb.in)
U55M3	**10** to 16 (**8** to 6)	10 (8)	2.5 (22.3)
U75M3	16 (6)	16 (6)	2.5 (22.3)
U55N4, U55S6, U75S6	**6** to 16 (**10** to 6)	6 (10)	2.5 (22.3)
U75N4	**10** to 16 (**8** to 6)	16 (8)	2.5 (22.3)

(1) The value in bold corresponds to the minimum wire gauge to permit secureness.
(2) 75°C (167 °F) copper cable (minimum wire size for rated use).

ATV312H D11M3, D15M3
ATV312H D11N4, D15N4
ATV312H D11S6, D15S6

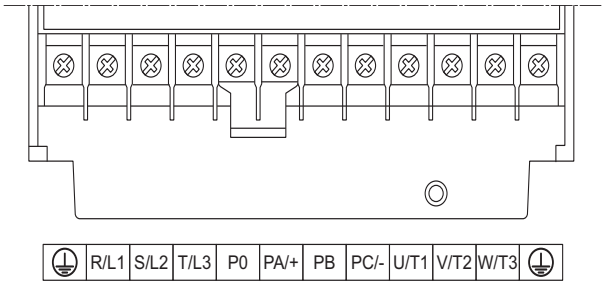

ATV312H	Applicable wire size (1) mm² (AWG)	Recommended wire size (2) mm² (AWG)	Tightening torque N·m (lb.in)
D11M3	**10** to 25 (**8** to 4)	25 (4)	4.5 (40.1)
D15M3, D15N4	**10** to 25 (**8** to 4)	16 (6)	4.5 (40.1)
D11N4, D11S6, D15S6	**10** to 25 (**8** to 4)	10 (8)	4.5 (40.1)

(1) The value in bold corresponds to the minimum wire gauge to permit secureness.
(2) 75°C (167 °F) copper cable (minimum wire size for rated use).

Control terminals

Access to the control terminals

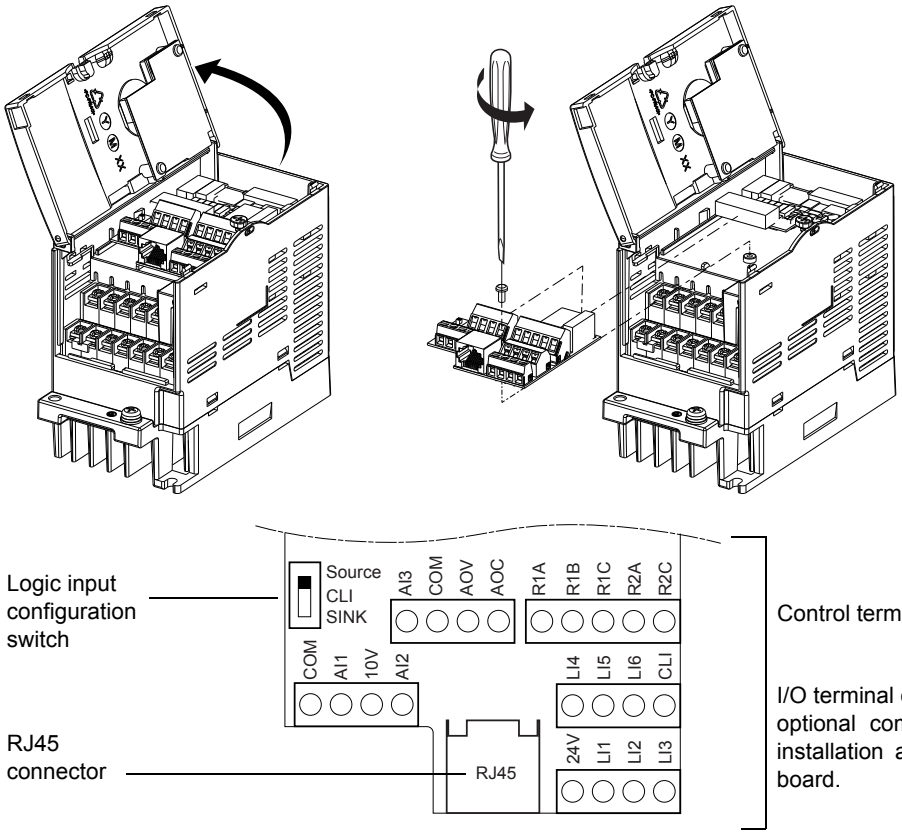

⚠ DANGER

UNINTENDED EQUIPMENT OPERATION

- Do not plug or unplug the terminal board while drive is powered.
- Check the tightening of the fixing screw after any manipulation on the terminal board.

Failure to follow these instructions will result in death or serious injury.

⚠⚠ DANGER

HAZARD OF ELECTRIC SHOCK, EXPLOSION, OR ARC FLASH

Do not touch the terminal board before :

- removing power on the drive,
- removing any voltage on input and output terminals.

Failure to follow these instructions will result in death or serious injury.

Arrangement of the control terminals

ATV312 Control terminals	Applicable wire size (1) mm² (AWG)	Tightening torque (2) N·m (lb.in)
R1A, R1B, R1C, R2A, R2C	**0.75** to 2.5 (**18** to 14)	0.5 to 0.6 (4.4 to 5.3)
Other terminals	**0.14** to 2.5 (**26** to 16)	

(1) The value in bold corresponds to the minimum wire gauge to permit secureness.
(2) Recommended to maximum value.

Characteristics and functions of the control terminals

Terminal	Function	Electrical characteristics
R1A R1B R1C	Common point C/O contact (R1C) of programmable relay R1	• Min. switching capacity: 10 mA for 5 V ⎓ • Max. switching capacity on resistive load (cos φ = 1 and L/R = 0 ms): 5 A for 250 V ∿ and 30 V ⎓ • Max. switching capacity on inductive load (cos φ = 0.4 and L/R = 7 ms): 1.5 A for 250 V ∿ and 30 V ⎓ • Sampling time 8 ms • Service life: 100,000 operations at max. switching power 1,000,000 operations at min. switching power
R2A R2C	N/O contact of programmable relay R2	
COM	Analog I/O common	0 V
AI1	Analog input voltage	Analog input 0 + 10 V (max. safe voltage 30 V) • Impedance 30 kΩ • Resolution 0.01 V, 10-bit converter • Precision ± 4.3%, linearity ± 0.2%, of max. value • Sampling time 8 ms • Operation with shielded cable 100 m max.
10 V	Power supply for reference potentiometer	+10 V (+ 8% - 0%), 10 mA max, protected against short-circuits and overloads
AI2	Analog input voltage	Bipolar analog input 0 ± 10 V (max. safe voltage ± 30 V) **The + or - polarity of the voltage on AI2 affects the direction of the setpoint and therefore the direction of operation.** • Impedance 30 kΩ • Resolution 0.01 V, 10-bit + sign converter • Precision ± 4.3%, linearity ± 0.2%, of max. value • Sampling time 8 ms • Operation with shielded cable 100 m max.
AI3	Analog input current	Analog input X - Y mA. X and Y can be programmed from 0 to 20 mA • Impedance 250 Ω • Resolution 0.02 mA, 10-bit converter • Precision ± 4.3%, linearity ± 0.2%, of max. value • Sampling time 8 ms
COM	Analog I/O common	0 V
AOV AOC	Analog output voltage AOV or Analog output current AOC or Logic output voltage AOC AOV or AOC can be assigned (either, but not both)	Analog output 0 to 10 V, min. load impedance 470 Ω or Analog output X - Y mA. X and Y can be programmed from 0 to 20 mA, max. load impedance 800 Ω • Resolution 8 bits (1) • Precision ± 1% (1) • Linearity ± 0.2% (1) • Sampling time 8 ms This analog output can be configured as a 24 V logic output on AOC, min. load impedance 1.2 kΩ. (1) Characteristics of digital/analog converter.
24 V	Logic input power supply	+ 24 V protected against short-circuits and overloads, min. 19 V, max. 30 V Max. customer current available 100 mA
LI1 LI2 LI3 LI4 LI5 LI6	Logic inputs	Programmable logic inputs • + 24 V power supply (max. 30 V) • Impedance 3.5 kΩ • State 0 if < 5 V, state 1 if > 11 V (voltage difference between LI- and CLI) • Sampling time 4 ms
CLI	Logic input common	See page 19.
RJ45	Communication port	Connection for SoMove software, Modbus and CANopen network, remote display, configuration loader tools,

Electromagnetic compatibility (EMC)

IMPORTANT: The high frequency equipotential ground connection between the drive, motor, and cable shielding does not eliminate the need to connect the ground (PE) conductors (green-yellow) to the appropriate terminals on each unit.

Principle and precautions

- Grounds between the drive, motor, and cable shielding must have high frequency equipotentiality.
- When using shielded cable for the motor, use a 4-conductor cable so that one wire will be the ground connection between the motor and the drive. Size of the ground conductor must be selected in compliance with local and national codes. The shield can then be grounded at both ends. Metal ducting or conduit can be used for part or all of the shielding length, provided there is no break in continuity.
- When using shielded cable for Dynamic Brake (DB) resistors, use a 3-conductor cable so that one wire will be the ground connection between the DB resistor assembly and the drive. The size of the ground conductor must be selected in compliance with local and national codes. The shield can then be grounded at both ends. Metal ducting or conduit can be used for part or all of the shielding length, provided there is no break in continuity.
- When using shielded cable for control signals, if the cable is connecting equipment that is close together and the grounds are bonded together, then both ends of the shield can be grounded. If the cable is connected to equipment that may have a different ground potential, then ground the shield at one end only to prevent large currents from flowing in the shield. The shield on the ungrounded end may be tied to ground with a capacitor (for example: 10 nF, 100 V or higher) in order to provide a path for the higher frequency noise. Keep the control circuits away from the power circuits. For control and speed reference circuits, we recommend using shielded twisted cables with a pitch of between 25 and 50 mm (1 and 2 in.) Keep the control circuits away from the power circuits. For control and speed reference circuits, we recommend using shielded twisted cables with a pitch of between 25 and 50 mm (1 and 2 in.)
- Ensure maximum separation between the power supply cable (line supply) and the motor cable.
- The motor cables must be at least 0.5 m (20 in.) long.
- Do not use surge arresters or power factor correction capacitors on the variable speed drive output.
- If using an additional input filter, it should be mounted as closed as possible to the drive and connected directly to the line supply via an unshielded cable. Link 1 on the drive is via the filter output cable.
- For installation of the optional EMC plate and instructions for meeting IEC 61800-3 standard, refer to the section entitled “Installing the EMC plates” and the instructions provided with the EMC plates.

⚠ ⚠ DANGER

HAZARD OF ELECTRIC SHOCK, EXPLOSION OR ARC FLASH

- Do not expose cable shielding except where connected to ground at the metal cable glands and underneath the grounding clamps.
- Ensure that there is no risk of the shielding coming into contact with live components.

Failure to follow these instructions will result in death or serious injury.

Optional EMC plate installation diagram and instructions (examples)

Installation depends on the drive size. The table below gives the size according to the reference.

Size 1	Size 2	Size 3	Size 4	Size 5	Size 6	Size 7	Size 8	Size 9
H018M3, H037M3	H055M3, H075M3	H018M2, H037M2	H055M2, H075M2	HU11M3, HU15M3	HU11M2, HU15M2, HU22M3, H037N4, H055N4, H075N4, HU11N4, HU15N4, H075S6, HU15S6	HU22M2, HU30M3, HU40M3, HU22N4, HU30N4, HU40N4, HU22S6, HU40S6	HU55M3, HU75M3, HU55N4, HU75N4, HU55S6, HU75S6	HD11M3, HD15M3, HD11N4, HD15N4, HD11S6, HD15S6

Sizes 1 to 4 Size 5 to 7 Size 8 Size 9

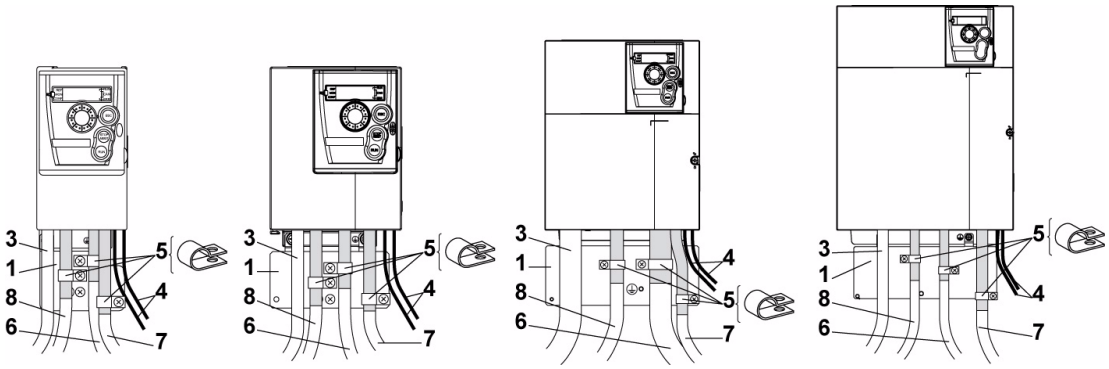

1. EMC plate supplied with the drive, to be installed as indicated on the diagram.
2. Altivar 312
3. Non-shielded power supply wires or cable
4. Non-shielded wires for relay contacts
5. Attach and ground the shielding of cables **6**, **7** and **8** as close as possible to the drive:
- Strip the shielding.
- Use stainless steel cable clamps of an appropriate size on the parts from which the shielding has been stripped, to attach them to the plate **1**.
The shielding must be clamped tightly to the metal plate to improve electrical contact.

6. Shielded cable for motor connection with shielding connected to ground at both ends.
The shielding must be continuous and intermediate terminals must be in EMC shielded metal boxes.
For 0.18 to 1.5 kW drives, if the switching frequency is higher than 12 kHz, use cables with low linear capacitance: max. 130 pF (picoFarads) per meter.

7. Shielded cable for connecting the control/signalling wiring.
For applications requiring several conductors, use cables with a small cross-section (0.5 mm^2, 20 AWG).
The shielding must be connected to ground at both ends. The shielding must be continuous and intermediate terminals must be in EMC shielded metal boxes.

8. Shielded cable for connecting braking resistor (if used).
The shielding must be continuous and intermediate terminals must be in EMC shielded metal boxes.

Note:
- If using an additional input filter, it should be mounted under the drive and connected directly to the line supply via an unshielded cable. Link 3 on the drive is then via the filter output cable.
- The HF equipotential ground connection between the drive, motor and cable shielding does not remove the need to connect the PE ground conductors (green-yellow) to the appropriate terminals on each unit.

Operation on an IT system

IT system: Isolated or impedance earthed neutral.

ATV312●●●●M2 and ATV312●●●●N4 drives have a built-in EMC filter. As a result they exhibit leakage current to ground. If the leakage current creates compatibility problems with your installation (residual current device or other), then you can reduce the leakage current by opening the IT jumper. In this configuration EMC compliance is not guaranteed.

Use a permanent insulation monitor compatible with non-linear loads (for example Merlin Gerin type XM200).

ATV312H 018M2 to U22M2 and ATV312H 037N4 to U40N4:

Pull out the jumper on the left of the ground terminal as illustrated below.

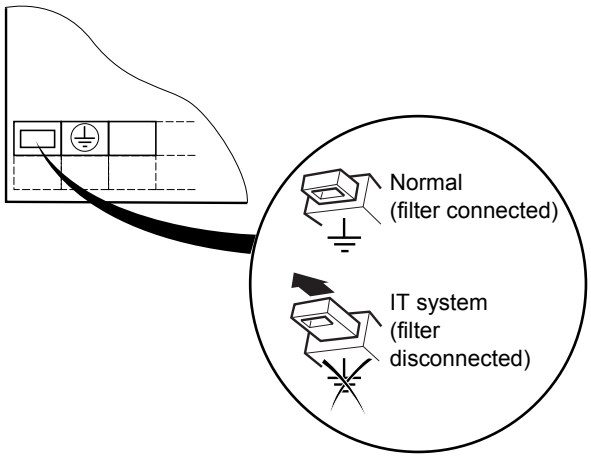

ATV312H U55N4 to D15N4:

Move the cable tag on the top left of the power terminals as illustrated below (example: ATV312HU55N4):

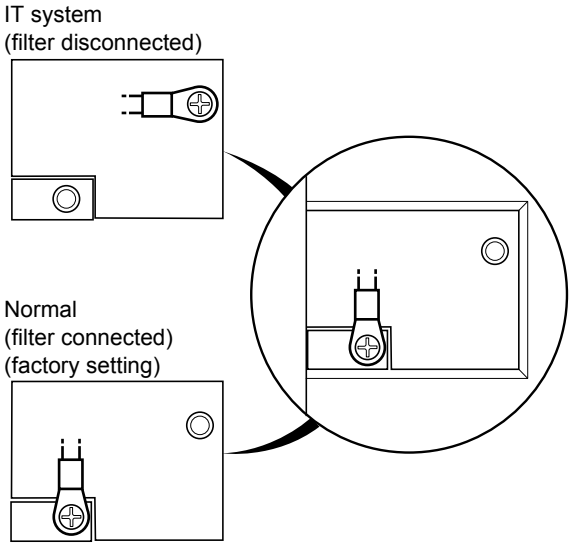

Check list

Read carefully the safety information in programming, installation, simplified manuals and the catalogue. Before starting up the drive, please check the following points regarding mechanical and electrical installations, then use and run the drive.
For complete documentation, refer to www.schneider-electric.com.

1. Mechanical installation

- For drive mounting types and recommendations on the ambient temperature (see the Mounting instructions on page 14).
- Mount the drive vertically as specified (see the Mounting instructions on page 14).
- The use of the drive must be in agreement with the environments defined by the standard 60721-3-3 and according to the levels defined in the catalogue.
- Mount the options required for your application (see catalogue).

2. Electrical installation

- Connect the drive to the ground (see Equipment Grounding on page 17).
- Ensure that the input power voltage corresponds to the drive nominal voltage and connect the line supply as shown on the drawing on page 18.
- Ensure to use appropriate input power fuses and circuit breaker.
- Wire the control terminals as required (see Control terminals on page 24). Separate the power cable and the control cable according to EMC compatibility rules.
- The range ATV312●●●●M2 and ATV312●●●●N4 integrates EMC filter. The leakage current can be reduced using the IT jumper as explained in the paragraph Operating on an IT system on page 28.
- Ensure that motor connections correspond to the voltage (star, delta).

3. Use and run the drive (see programming manual)

- Start the drive and you will see [Standard mot. freq] (bFr) at the first power on. Check that the frequency defined by the frequency bFr (the factory setting is 50 Hz) is in accordance with the frequency of the motor.
- On first power-up parameters [Ref.1 channel] (Fr1) and [2/3 wire control] (tCC) appear after bFr. These parameters should be set if you want to control the drive locally, see page «How to control the drive locally» in the programming manual.
- On subsequent power-up, rdy will be displayed on the HMI.
- The [Restore config.] (FCS) function, permits you to reset the drive with factory settings.

Maintenance

Servicing

The Altivar 312 does not require any preventive maintenance. However, it is advisable to perform the following checks regularly:

- The condition and tightness of connections.
- Ensure that the temperature around the unit remains at an acceptable level and that ventilation is effective. Average service life of fans: 10 years.
- Remove any dust from the drive.
- Ensure proper fan operation.
- Physical damage to covers.

Assistance with maintenance, detected fault display

If a problem arises during setup or operation, ensure that the recommendations relating to the environment, mounting and connections have been observed.

The first fault detected is stored and displayed, flashing, on the screen: the drive locks and the status relay (R1) contact opens.

Clearing the detected fault

Disconnect the drive power supply in the event of a non-resettable fault.
Wait for the display to go off completely.
Find the cause of the detected fault and correct it.
Restore power to the drive.
The detected fault will no longer be present if it's cause has been corrected.
In the event of a non resettable detected fault:

- Remove/cut the power to the drive.
- WAIT 15 MINUTES to allow the DC bus capacitors to discharge. Then follow the “Bus Voltage Measurement Procedure” page 16 to verify that the DC voltage is less than 42 V. The drive LEDs are not indicators of the absence of DC bus voltage.
- Find and correct the detected fault.
- Restore power to the drive to confirm the detected fault has been rectified.

Certain detected faults can be programmed for automatic restart after the cause has disappeared.
These detected faults can also be reset by cycling power to the drive or by means of a logic input or control bit.

Display menu

Use the display menu to show the status of the drive and it's current values as an aid for finding the causes of detected faults.

Spares and repairs

Serviceable product: replacement of spares following the catalog.

Procedure after a long time storage

⚠ WARNING

RISK OF EXPLOSION AT THE POWER UP

The capacitors after a long time storage can have issues. Following a storage time between 2 and 3 years:

- Use one AC supply variable connected between L1, L2 and L3
- Increase AC supply voltage to have:
  - 25% of rated voltage during 30mn
  - 50% of rated voltage during 30mn
  - 75% of rated voltage during 30mn
  - 100% of rated voltage during 30mn

Failure to follow these instructions can result in death, serious injury, or equipment damage.

Short-circuit rating and branch circuit protection

Recommended fuse ratings for UL and CSA requirements

Reference	Voltage (Y)	Input withstand rating (1)	Output interrupt rating (X)(2)	Enclosure Containment rating (3) (Type 1)	Branch Circuit protection (Z1)	Rating (Z2)
ATV312H018M2	200-240	1	22		Class J Fuse	6
ATV312H037M2	200-240	1	22		Class J Fuse	10
ATV312H055M2	200-240	1	22		Class J Fuse	10
ATV312H075M2	200-240	1	22		Class J Fuse	15
ATV312HU11M2	200-240	1	22		Class J Fuse	20
ATV312HU15M2	200-240	1	22		Class J Fuse	20
ATV312HU22M2	200-240	1	22		Class J Fuse	30
ATV312H018M3X	200-240	5	22	22	Class J Fuse	3
ATV312H037M3X	200-240	5	22	22	Class J Fuse	6
ATV312H055M3X	200-240	5	22	22	Class J Fuse	10
ATV312H075M3X	200-240	5	22	22	Class J Fuse	10
ATV312HU11M3X	200-240	5	22	22	Class J Fuse	15
ATV312HU15M3X	200-240	5	22	22	Class J Fuse	15
ATV312HU22M3X	200-240	5	22	22	Class J Fuse	20
ATV312HU30M3X	200-240	5	22	22	Class J Fuse	25
ATV312HU40M3X	200-240	5	22	22	Class J Fuse	35
ATV312HU55M3X	200-240	22	22	22	Class J Fuse	50
ATV312HU75M3X	200-240	22	22	22	Class J Fuse	60
ATV312HD11M3X	200-240	22	22	22	Class J Fuse	80
ATV312HD15M3X	200-240	22	22	22	Class J Fuse	110
ATV312H037N4	380-500	5	22	100	Class J Fuse	3
ATV312H055N4	380-500	5	22	100	Class J Fuse	6
ATV312H075N4	380-500	5	22	100	Class J Fuse	6
ATV312HU11N4	380-500	5	22	100	Class J Fuse	10
ATV312HU15N4	380-500	5	22	100	Class J Fuse	10
ATV312HU22N4	380-500	5	22	100	Class J Fuse	15
ATV312HU30N4	380-500	5	22	100	Class J Fuse	15
ATV312HU40N4	380-500	5	22	100	Class J Fuse	20
ATV312HU55N4	380-500	22	22	100	Class J Fuse	30
ATV312HU75N4	380-500	22	22	100	Class J Fuse	35
ATV312HD11N4	380-500	22	22	100	Class J Fuse	50
ATV312HD15N4	380-500	22	22	100	Class J Fuse	70
ATV312H075S6X	575-600	5	22	22	Class J Fuse	6
ATV312HU15S6X	575-600	5	22	22	Class J Fuse	6
ATV312HU22S6X	575-600	5	22	22	Class J Fuse	10
ATV312HU40S6X	575-600	5	22	22	Class J Fuse	15
ATV312HU55S6X	575-600	22	22	22	Class J Fuse	20
ATV312HU75S6X	575-600	22	22	22	Class J Fuse	25
ATV312HD11S6X	575-600	22	22	22	Class J Fuse	35
ATV312HD15S6X	575-600	22	22	22	Class J Fuse	45

Suitable For Use On A Circuit Capable Of Delivering Not More Than ___X____ rms Symmetrical Amperes, ___Y____ Volts Maximum, When Protected by __Z 1____ with a Maximum rating of__Z 2___.

(1) Input withstand rating is that for which the product has been designed thermally. Installation on a supply greater than this level will require additional inductance to satisfy this level.

(2) Output interrupt rating relies on Integral solid state short circuit protection. This does not provide branch circuit protection. Branch circuit protection must be provided in accordance with the National Electrical Code and any additional local codes. This is dependant on the type of installation.

(3) Enclosure Containment Rating is the maximum input short-circuit current at the drive input terminals with the specific branch Circuit Protection present for which any internal component breakdown, will not create a shock, flame, fire or expulsion hazard outside a specific enclosure structure. The various combinations are indicated in supplementary documents.

BBV46391
ATV312_installation_manual_V1
04/2009

Altivar 312

Variable speed drives for asynchronous motors

Programming manual

07/2014

BBV46385

www.schneider-electric.com

Schneider Electric

The information provided in this documentation contains general descriptions and/or technical characteristics of the performance of the products contained herein. This documentation is not intended as a substitute for and is not to be used for determining suitability or reliability of these products for specific user applications. It is the duty of any such user or integrator to perform the appropriate and complete risk analysis, evaluation, and testing of the products with respect to the relevant specific application or use thereof. Neither Schneider Electric nor any of its affiliates or subsidiaries shall be responsible or liable for misuse of the information contained herein. If you have any suggestions for improvements or amendments or have found errors in this publication, please notify us.

No part of this document may be reproduced in any form or by any means, electronic, or mechanical, including photocopying, without express written permission of Schneider Electric.

All pertinent state, regional, and local safety regulations must be observed when installing and using this product. For reasons of safety and to help ensure compliance with documented system data, only the manufacturer should perform repairs to components.

When devices are used for applications with technical safety requirements, the relevant instructions must be followed.

Failure to use Schneider Electric software or approved software with our hardware products may result in injury, harm, or improper operating results.

Failure to observe this information can result in injury or equipment damage.
© 2013 Schneider Electric. All rights reserved.

Contents

Important information 4
Before you begin 5
Documentation structure 7
Software enhancements 8
Steps for setting up the drive 9
Setup - Preliminary Recommendations 10
Factory configuration 11
Basic functions 12
Remote display terminal option, ATV31 14
Remote graphic display terminal option, ATV61/ATV71 15
Remote display terminal option, ATV12 19
Structure of the parameter tables 20
Compatibility of functions 21
List of functions that can be assigned to inputs/outputs 23
List of functions that can be assigned to the Network and Modbus control word bits 25
Checklist 26
Programming 27
[SPEED REFERENCE] (rEF-) menu 31
[SETTINGS] (SEt-) menu 32
[MOTOR CONTROL] (drC-) menu 41
[INPUTS / OUTPUTS CFG] (I-O-) menu 47
[COMMAND] (CtL-) menu 50
[COMMAND] (CtL-) menu 61
[APPLICATION FUNCT.] (FUn-) menu 62
[FAULT MANAGEMENT] (FLt-) menu 91
[COMMUNICATION] (COM-) menu 98
[MONITORING] (SUP-) menu 100
Migration ATV31 - ATV312 105
Diagnostics and troubleshooting 106
Index of functions 111
Index of parameter codes and customer settings 112

Important information

NOTICE

Read these instructions carefully, and look at the equipment to become familiar with the device before trying to install, operate, or maintain it. The following special messages may appear throughout this documentation or on the equipment to warn of potential hazards or to call attention to information that clarifies or simplifies a procedure.

The addition of this symbol to a Danger or Warning safety label indicates that an electrical hazard exists, which will result in personal injury if the instructions are not followed.

This is the safety alert symbol. It is used to alert you to potential personal injury hazards. Obey all safety messages that follow this symbol to avoid possible injury or death.

⚠ DANGER

DANGER indicates an imminently hazardous situation which, if not avoided, will result in death, serious injury or equipment damage.

⚠ WARNING

WARNING indicates a potentially hazardous situation which, if not avoided, can result in death, serious injury or equipment damage.

⚠ CAUTION

CAUTION indicates a potentially hazardous situation which, if not avoided, can result in injury or equipment damage.

CAUTION

CAUTION, used without the safety alert symbol, indicates a potentially hazardous situation which, if not avoided, can result in equipment damage.

PLEASE NOTE

The word "drive" as used in this manual refers to the "controller portion" of the adjustable speed drive as defined by NEC.

Electrical equipment should be installed, operated, serviced, and maintained only by qualified personnel. No responsibility is assumed by Schneider Electric for any consequences arising out of the use of this documentation.

© 2013 Schneider Electric. All rights reserved.

Before you begin

Read and understand these instructions before performing any procedure with this drive.

⚠ ⚠ DANGER

HAZARD OF ELECTRIC SHOCK, EXPLOSION, OR ARC FLASH

- Only appropriately trained persons who are familiar with and understand the contents of this manual and all other pertinent product documentation and who have received safety training to recognize and avoid hazards involved are authorized to work on and with this drive system. Installation, adjustment, repair and maintenance must be performed by qualified personnel.
- The system integrator is responsible for compliance with all local and national electrical code requirements as well as all other applicable regulations with respect to grounding of all equipment.
- Many components of the product, including the printed circuit boards, operate with mains voltage. Do not touch. Use only electrically insulated tools.
- Do not touch unshielded components or terminals with voltage present.
- Motors can generate voltage when the shaft is rotated. Prior to performing any type of work on the drive system, block the motor shaft to prevent rotation.
- AC voltage can couple voltage to unused conductors in the motor cable. Insulate both ends of unused conductors of the motor cable.
- Do not short across the DC bus terminals or the DC bus capacitors or the braking resistor terminals.
- Before performing work on the drive system:
  - Disconnect all power, including external control power that may be present.
  - Place a "Do Not Turn On" label on all power switches.
  - Lock all power switches in the open position.
  - Wait 15 minutes to allow the DC bus capacitors to discharge. The DC bus LED is not an indicator of the absence of DC bus voltage that can exceed 800 Vdc.
  - Measure the voltage on the DC bus between the DC bus terminals using a properly rated voltmeter to verify that the voltage is < 42 Vdc.
  - If the DC bus capacitors do not discharge properly, contact your local Schneider Electric representative.
- Install and close all covers before applying voltage.

Failure to follow these instructions will result in death or serious injury.

⚠ DANGER

UNINTENDED EQUIPMENT OPERATION

- Read and understand this manual before installing or operating the Altivar 312 drive.
- Any changes made to the parameter settings must be performed by qualified personnel.

Failure to follow these instructions will result in death or serious injury.

⚠ WARNING

DAMAGED EQUIPMENT

Do not install or operate any drive that appears damaged.

Failure to follow these instructions can result in death, serious injury, or equipment damage.

⚠ WARNING

LOSS OF CONTROL

- The designer of any control scheme must consider the potential failure modes of control paths and, for critical control functions, provide a means to achieve a safe state during and after a path failure. Examples of critical control functions are emergency stop, overtravel stop, power outage, and restart.
- Separate or redundant control paths must be provided for critical control functions.
- System control paths may include communication links. Consideration must be given to the implications of unanticipated transmission delays or failures of the link.
- Observe all accident prevention regulations and local safety guidelines.[a]
- Each implementation of the product must be individually and thoroughly tested for proper operation before being placed into service.

Failure to follow these instructions can result in death, serious injury, or equipment damage.

a. For USA: Additional information, refer to NEMA ICS 1.1 (latest edition), “Safety Guidelines for the Application, Installation, and Maintenance of Solid State Control” and to NEMA ICS 7.1 (latest edition), “Safety Standards for Construction and Guide for Selection, Installation and Operation of Adjustable Speed Drive Systems.”

Documentation structure

The following Altivar 312 technical documents are available on the Schneider Electric website (www.schneider-electric.com).

Installation Manual

This manual describes how to install and connect the drive.

Programming manual

This manual describes the functions and parameters of the drive's terminals and how to use them.

Quick Start

This document describes how to connect and configure the drive so that the motor can be started both quickly and easily for basic applications. This document is supplied with the drive.

Manuals for Modbus®, CANopen®, etc.

These manuals describe the installation process, the bus or network connections, signaling, diagnostics and the configuration of parameters specific to communication.
They also describe the communication services of the protocols.

Software enhancements

Since it was first marketed, the Altivar ATV 312 has been equipped with additional functions. Software version V5.1 IE 50 has now been updatedto V5.1 IE 54. This documentation relates to version V5.1 IE 54.
The software version appears on the rating plate attached to the side of the drive.

Enhancements made to version V5.1 IE 54 in comparison to V5.1 IE 50

New possible configuration

- Local configuration : By pressing the MODE button during 3 seconds, the drive switches automatically to Local configuration. The embedded Jog Dial works as a potentiometer (Fr1 = AIV1) and embedded RUN button is activated.

- Remote configuration : This is the factory configuration.

INSTALLATION

1. Please refer to the Installation Manual.

PROGRAMMING

Tips:

- Before beginning programming, complete the customer setting tables, page 112.
- Use the [Restore config.] (FCS) parameter, page 46, to return to the factory settings at any time.
- To locate the description of a function quickly, use the index of functions on page 111.
- Before configuring a function, read carefully the "Function compatibility" section on pages 21 and 22.
- **Note:**
  The following operations must be performed for optimum drive performance in terms of accuracy and response time:
  - Enter the values indicated on the (motor) rating plate in the [MOTOR CONTROL] (drC-) menu, page 41.
  - Perform auto-tuning with the motor cold and connected using the [Auto-tuning] (tun) parameter, page 43.
  - Adjust the [FreqLoopGain] (FLG) parameter, page 33 and the [Fr.Loop.Stab] (StA) parameter, page 34.

2. Apply input power to the drive, but do not give a run command.

3. Configure:

- ☐ The nominal frequency of the motor [Standard mot. freq] (bFr) page 41 if this is not 50 Hz,
- ☐ The motor parameters in the [MOTOR CONTROL] (drC-) menu, page 41, only if the factory configuration of the drive is not suitable,
- ☐ The application functions in the [INPUTS / OUTPUTS CFG] (I-O-) menu, page 47, the [COMMAND] (CtL-) menu, page 50, and the [APPLICATION FUNCT.] (FUn-) menu, page 62, only if the factory configuration of the drive is not suitable.

4. In the [SETTINGS] (SEt-) menu, adjust the following parameters:

- ☐ [Acceleration] (ACC), page 32 and [Deceleration], (dEC) page 32,
- ☐ [Low speed] (LSP), page 33 and [High speed] (HSP), page 33,
- ☐ [Mot. therm. current] (ItH), page 33.

5. Start the drive.

Setup - Preliminary Recommendations

Before powering up the drive

⚠ DANGER

UNINTENDED EQUIPMENT OPERATION

Make sure that all logic inputs are inactive to avoid any unintended operation.

Failure to follow these instructions will result in death or serious injury.

Before configuring the drive

⚠ DANGER

UNINTENDED EQUIPMENT OPERATION

- Read and understand this manual before installing or operating the ATV312 drive.
- Any changes made to the parameter settings must be performed by qualified personnel.
- Make sure that all logic inputs are inactive to avoid any unintended operation when parameters are being changed.

Failure to follow these instructions will result in death or serious injury.

Start-up

Note: When factory settings apply and during power-up/manual reset or after a stop command, the motor can only be powered once the "forward", "reverse" and "DC injection stop" commands have been reset. If they have not been reset, the drive will display [Freewheel stop] (nSt) but will not start. If the automatic restart function has been configured ([Automatic restart] (Atr) parameter in the [FAULT MANAGEMENT] (FLt-) menu, page 91), these commands are taken into account without a reset (to zero) being necessary.

Line contactor

CAUTION

RISK OF DAMAGE TO DRIVE

- Frequent use of the contactor will cause premature ageing of the filter capacitors.
- Do not have cycle times less than 60 seconds.

Failure to follow these instructions can result in equipment damage.

Using a motor with a lower rating or dispensing with a motor altogether

- With the factory settings, motor output phase loss detection is active ([Output Phase Loss] (OPL) = [YES] (YES), page 94). To avoid having to use a motor with the same rating as the drive when testing the drive or during a maintenance phase, deactivate motor output phase loss detection ([Output Phase Loss] (OPL) = [No] (nO)). This can prove particularly useful if very powerful drives are being used.
- Set the [U/F mot 1 selected] (UFt) parameter, page 44, on [Cst. torque] (L) in the [MOTOR CONTROL] (drC-) menu.

CAUTION

RISK OF DAMAGE TO MOTOR

Motor thermal protection will not be provided by the drive if the motor 's nominal current is 20% lower than that of the drive. Find an alternative source of thermal protection.

Failure to follow these instructions can result in equipment damage.

Factory configuration

Factory settings

The Altivar 312 is factory-set for the most common operating conditions:

- Display: drive ready [Ready] (rdY) with motor stopped, and motor frequency with motor running.
- The LI5 and LI6 and logic inputs, AI3 analog input, AOC analog output, and R2 relay are unaffected.
- Stop mode when fault detected: freewheel

Code	Description	Value	Page
bFr	[Standard mot. freq]	[50Hz IEC]	41
tCC	[2/3 wire control]	[2 wire] (2C): 2-wire control	30
uFt	[U/F mot 1 selected]	[SVC] (n): Sensorless flux vector control for constant torque applications	44
ACC dEC	[Acceleration] [Deceleration]	3.00 seconds	63
LSP	[Low speed]	0 Hz	33
HSP	[High speed]	50 Hz	33
ItH	[Mot. therm. current]	Nominal motor current (value depending on drive rating)	33
SdC1	[Auto DC inj. level 1]	0.7 x nominal drive current, for 0.5 seconds	35
SFr	[Switching freq.]	4 kHz	40
rrS	[Reverse assign.]	[LI2] (LI2): Logic input LI2	48
PS2	[2 preset speeds]	[LI3] (LI3): Logic input LI3	72
PS4	[4 preset speeds]	[LI4] (LI4): Logic input LI4	72
Fr1	[Ref.1 channel]	[AI1] (AI1) - Analog input AI1	29
SA2	[Summing ref. 2]	[AI2] (AI2) - Analog input AI2	70
r1	[R1 Assignment]	[No drive flt] (FLt): The contact opens when a fault is detected or when the drive has been switched off	49
brA	[Dec ramp adapt.]	[Yes] (YES): Function active (automatic adaptation of deceleration ramp)	64
Atr	[Automatic restart]	[No] (nO): Function inactive	91
Stt	[Type of stop]	[Ramp stop] (rMP): On ramp	65
CFG	[Macro configuration]	[Factory set.] (Std) (1)	45

Check whether the values above are compatible with the application. If necessary, the drive can be used without changing the settings.

(1) If you want to keep the drive's presettings to a minimum, select the macro configuration [Macro configuration] (CFG) = [Start/stop] (StS) followed by [Restore config.] (FCS) = [Factory Set.] (InI) (page 46).

The [Start/stop] (StS) macro configuration is the same as the factory configuration, apart from the I/O assignment:

- Logic inputs:
  - LI1, LI2 (reversing): 2-wire transition detection control, LI1 = run forward, LI2 = run reverse.
  - LI3 to LI6: Inactive (not assigned).
- Analog inputs:
  - AI1: Speed reference 0-10 V.
  - AI2, AI3: Inactive (not assigned).
- Relay R1: The contact opens in the event of a detected fault (or drive off).
- Relay R2: Inactive (not assigned).
- Analog output AOC: 0-20 mA, inactive (not assigned).

Drive thermal protection

Functions:

Thermal protection by PTC probe fitted on the heatsink or integrated in the power module.
Indirect protection of the drive against overloads by tripping in the event of an overcurrent. Typical tripping values:

- Motor current = 185% of nominal drive current: 2 seconds
- Motor current = 150% of nominal drive current: 60 seconds

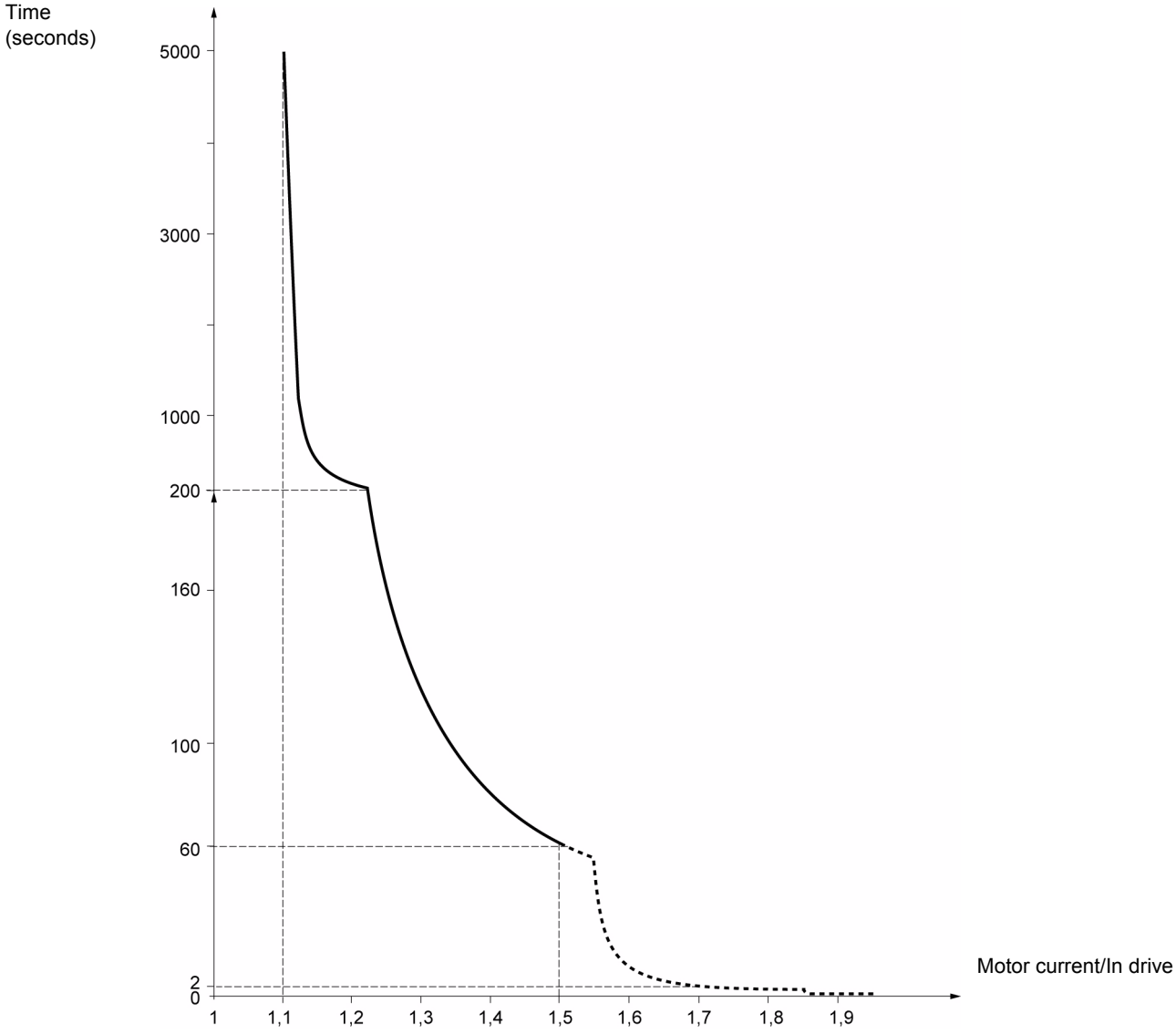

Drive ventilation

The fan starts up when the drive is powered up then shuts down after 10 seconds if a run command has not been received.
The fan is powered automatically when the drive is unlocked (direction of operation + reference). It is powered down a few seconds after the drive is locked (motor speed < 0.2 Hz and injection braking completed).

Motor thermal protection

Function:

Thermal protection by calculating the I^2t.
The protection takes account of self-cooled motors.

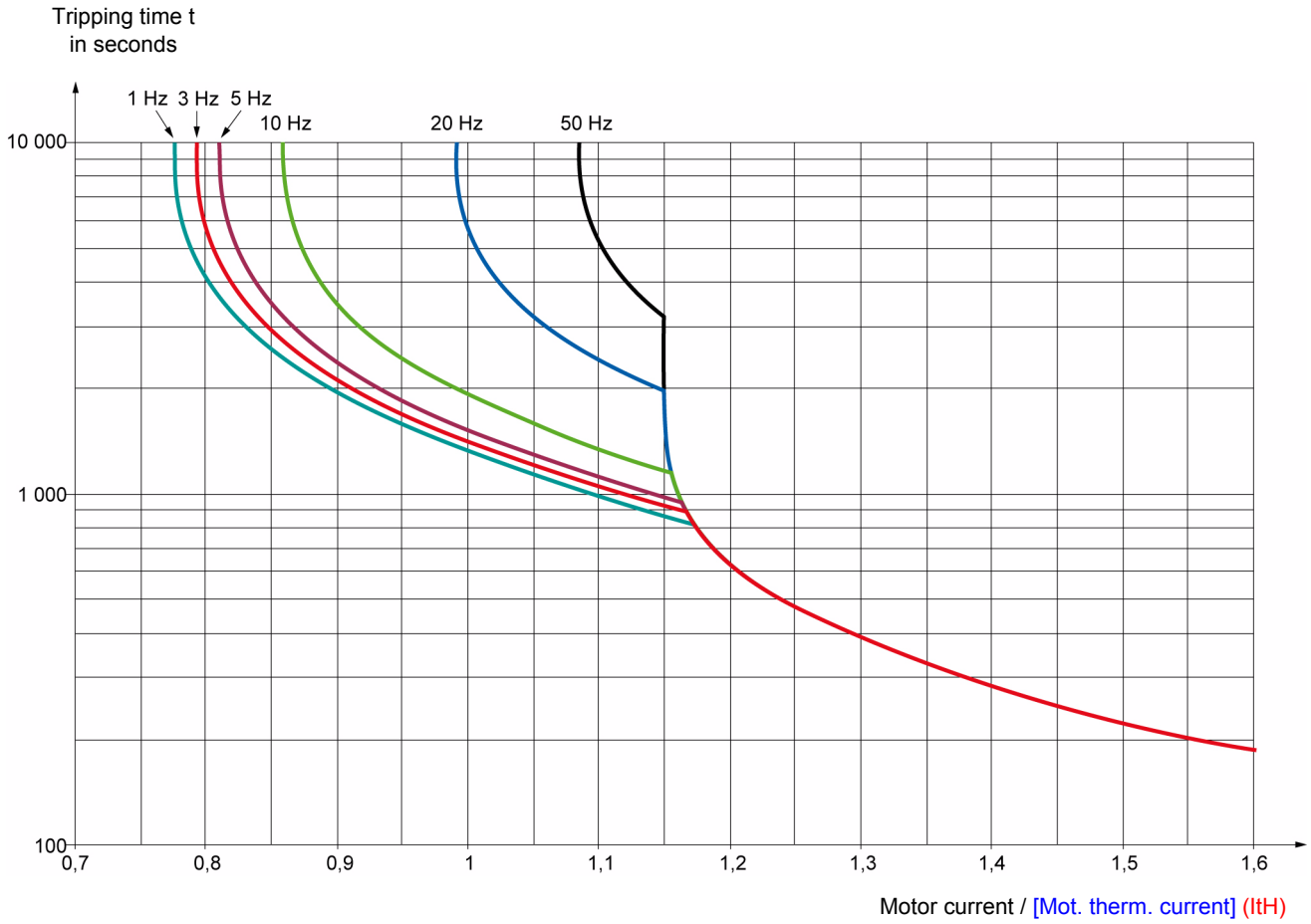

CAUTION
RISK OF DAMAGE TO MOTOR External protection against overloads is required under the following circumstances: • When the product is being switched on again, as there is no memory to record the motor thermal state • When supplying more than one motor • When supplying motors with ratings less than 0.2 times the nominal drive current • When using motor switching **Failure to follow these instructions can result in equipment damage.**

Remote display terminal option, ATV31

This terminal is a local control unit which can be mounted on the door of the wall-mounted or floor-standing enclosure. It has a cable with connectors, which is connected to the drive serial link (see the manual supplied with the terminal). Its display capabilities are practically identical to those of the Altivar 312. With this terminal, however, up and down arrows are used for navigation rather than a jog dial. There is also an access locking switch for the menus. There are three buttons for controlling the drive (1):

- FWD/REV: Reversal of the direction of rotation
- RUN: Motor run command
- STOP/RESET: Motor stop command or reset

Pressing the button a first time stops the motor, and if DC injection standstill braking is configured, pressing it a second time stops this braking.

View of the front panel::

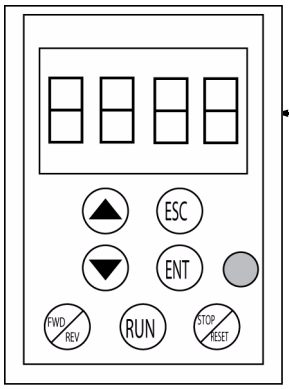

View of the rear panel :

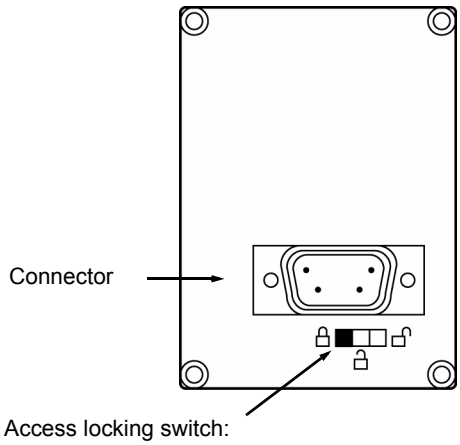

- Position: [MONITORING] (SUP-) and [SPEED REFERENCE] (rEF-) menus can be accessed.
- Position: [SETTINGS] (SEt-), [MONITORING] (SUP-) and [SPEED REFERENCE] (rEF-) can be accessed.
- Position: All menus can be accessed

Note: Protection via customer confidential code has priority over the switch.

Note:

- The remote terminal access locking switch also locks access by the drive keys.
- When the remote display terminal is disconnected, any locking remains active for the drive keys.
- The remote display terminal will only be active if the [Modbus baud rate] (tbr) parameter in the [COMMUNICATION] (COM-) menu, page 98, still has its factory setting: [19.2 Kbps] (19.2).

(1) To activate the buttons on the remote display terminal, you first have to configure [HMI command] (LCC) = [Yes] (YES), page 61.

Saving and loading configurations

Up to four complete configurations for ATV312 drives without an option card can be stored on the remote display terminal. These configurations can be saved, transported and transferred from one drive to another of the same rating. 4 different operations for the same device can also be stored on the terminal.
See the [Saving config.] (SCS) and [Restore config.] (FCS) parameters in the [MOTOR CONTROL] (drC-) menu, pages 45 and 46, the [INPUTS / OUTPUTS CFG] (I-O-) menu, pages 49 and 49, the [COMMAND] (CtL-) menu, pages 61 and 61, and the [APPLICATION FUNCT.] (FUn-) menu, pages 90 and 90.

To transfer a configuration between an ATV31 and an ATV32, follow the procedure on page 90.

Description of the terminal

Thanks to the screen size of this graphic display terminal, which works with FLASH V1.1IE19 or higher and is part of the ATV71, it is possible to display more detailed information than can be shown on an on-board display. It is connected in the same way as the ATV31 remote display terminal.

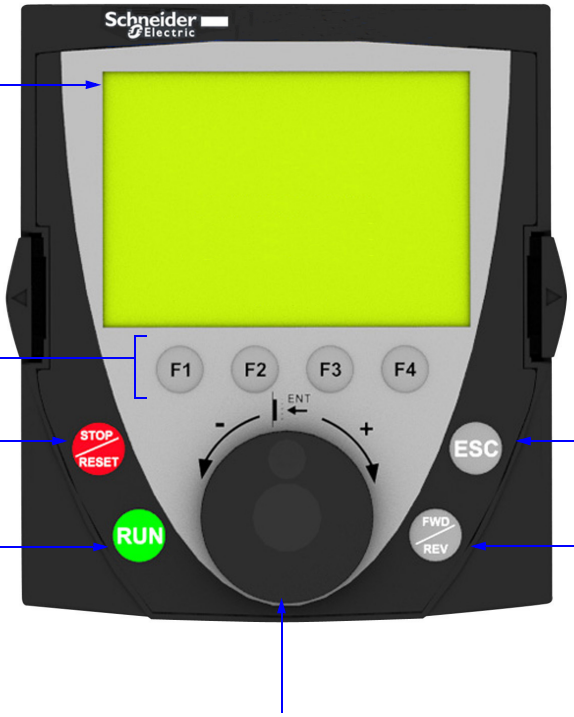

1 Graphic display

2 Function keys:
F1: CODE
F2, F3: not used
F4: MODE

3 Button to stop/reset

4 Run button

7 ESC button:cancels a value, a parameter or a menu to return to the previous selection

6 Button for reversing the direction of rotation of the motor

5 Navigation button:

- Press (ENT): - To save the current value
  - To enter the selected menu or parameter
- Turn CW/CCW: - To increase or decrease a value
  - To go to the next or previous line
  - To increase or decrease the reference if control via the display terminal is activated

Note: Keys **3**, **4**, **5** and **6** can be used to control the drive directly, if control via the terminal is activated.

To activate the buttons on the remote display terminal, you first have to configure [HMI command] (LCC) = [Yes] (YES), page 61.

Powering up the graphic display terminal for the first time

When powering up the graphic display terminal for the first time, the user has to select the required language.

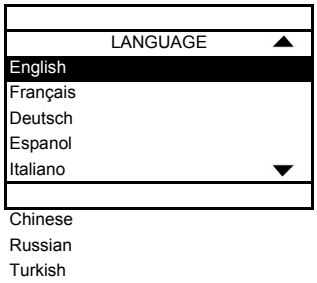

Display after the graphic display terminal has been powered up for the first time.
Select the language and press ENT.

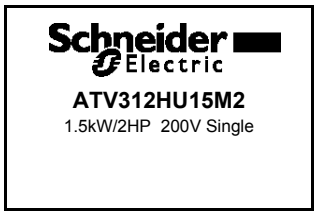

The drive's rating details will now appear.

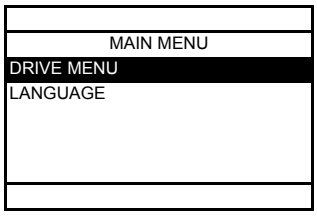

The [MAIN MENU] follows automatically.

3 seconds or ENT

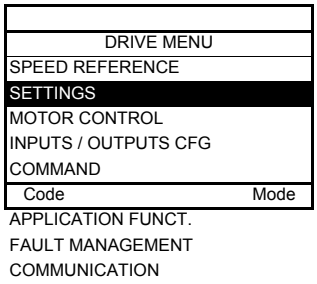

Automatically switches to the [DRIVE MENU] menu after 3 seconds.
Select the menu and press ENT.

Powering up the drive for the first time

When powering up the drive for the first time, the user immediately accesses the 3 parameters below: [Standard mot. freq] (bFr), [Ref.1 channel] (Fr1), and [2/3 wire control] (tCC), page 30. .

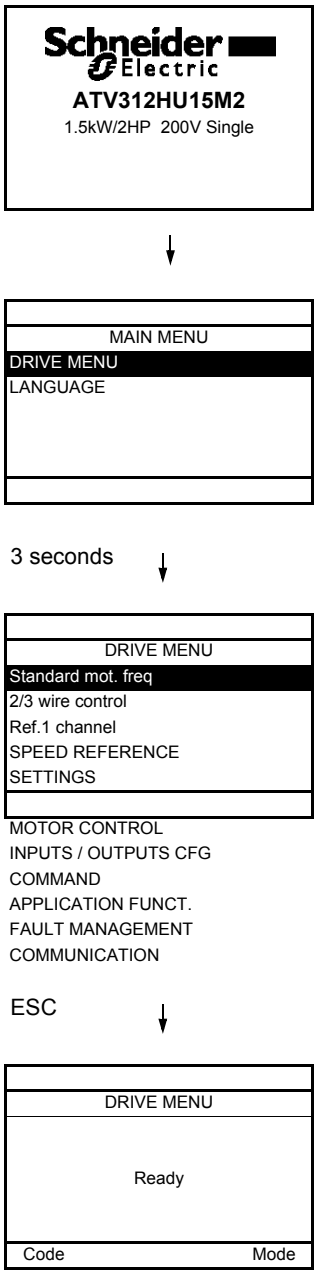

Display after the drive has been powered up for the first time.

The [MAIN MENU] follows automatically.

Automatically switches to the [DRIVE MENU] menu after 3 seconds.
Select the menu and press ENT.

The word "Ready" appears on the graphic display terminal if you press the ESC key when in the [DRIVE MENU].

Subsequent power-ups

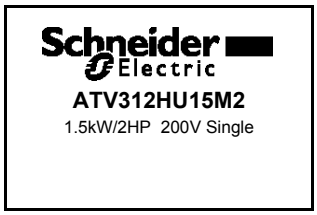

Display after powering up.

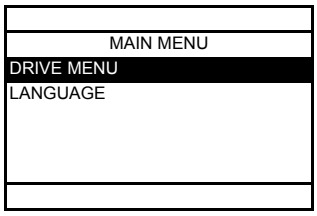

The [MAIN MENU] follows automatically.

3 seconds

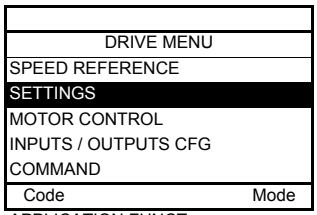

APPLICATION FUNCT.
FAULT MANAGEMENT
COMMUNICATION

Automatically switches to the [DRIVE MENU] menu after 3 seconds.
Select the menu and press ENT.

ESC

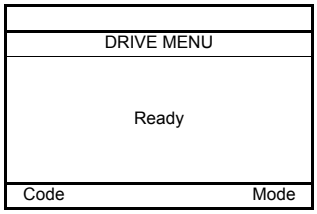

The word "Ready" appears on the graphic display terminal if you press the ESC key when in the [DRIVE MENU].

Description of the terminal

This terminal is a local control unit which can be mounted on the door of the wall-mounted or floor-standing enclosure. It has a cable with connectors, which is connected to the drive serial link (see the manual supplied with the terminal). Its display capabilities are practically identical to those of the Altivar 312. With this terminal, up and down arrows are used for navigation rather than a jog dial.

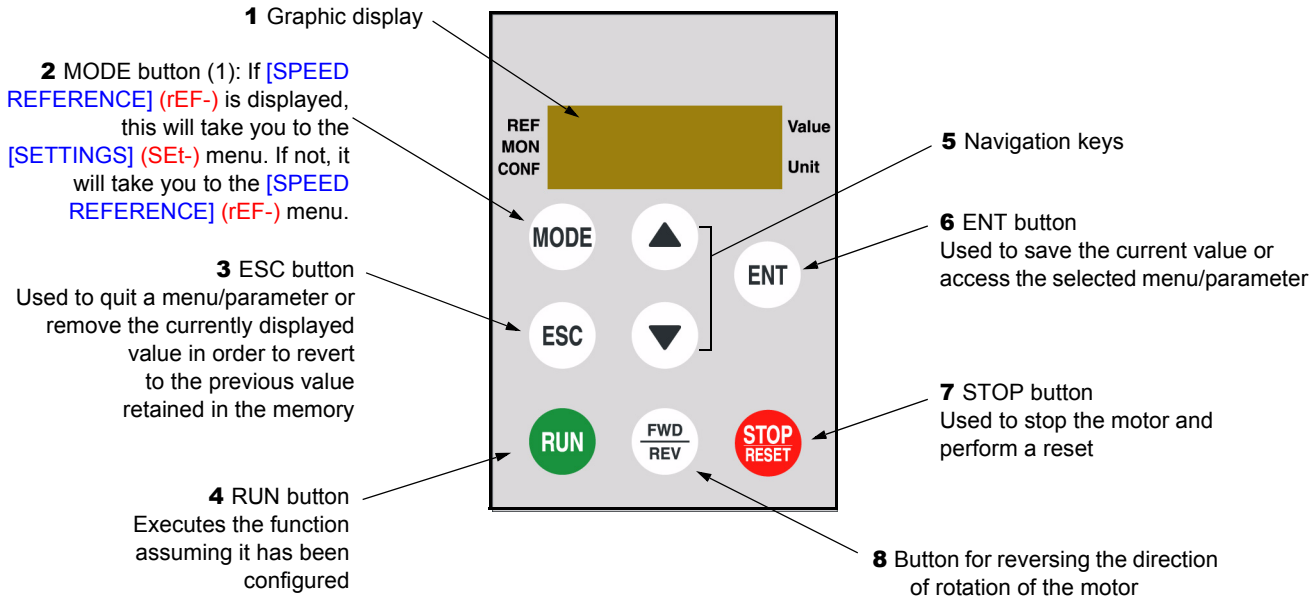

(1) If the drive is locked by a code ([PIN code 1] (COd), page 103), pressing the Mode key enables you to switch from the [MONITORING] (SUP-) menu to the [SPEED REFERENCE] (rEF-) menu and vice versa.

To activate the buttons on the remote display terminal, you first have to configure [HMI command] (LCC) = [Yes] (YES), page 61.

Structure of the parameter tables

The parameter tables contained in the descriptions of the various menus are organized as follows.

Example :

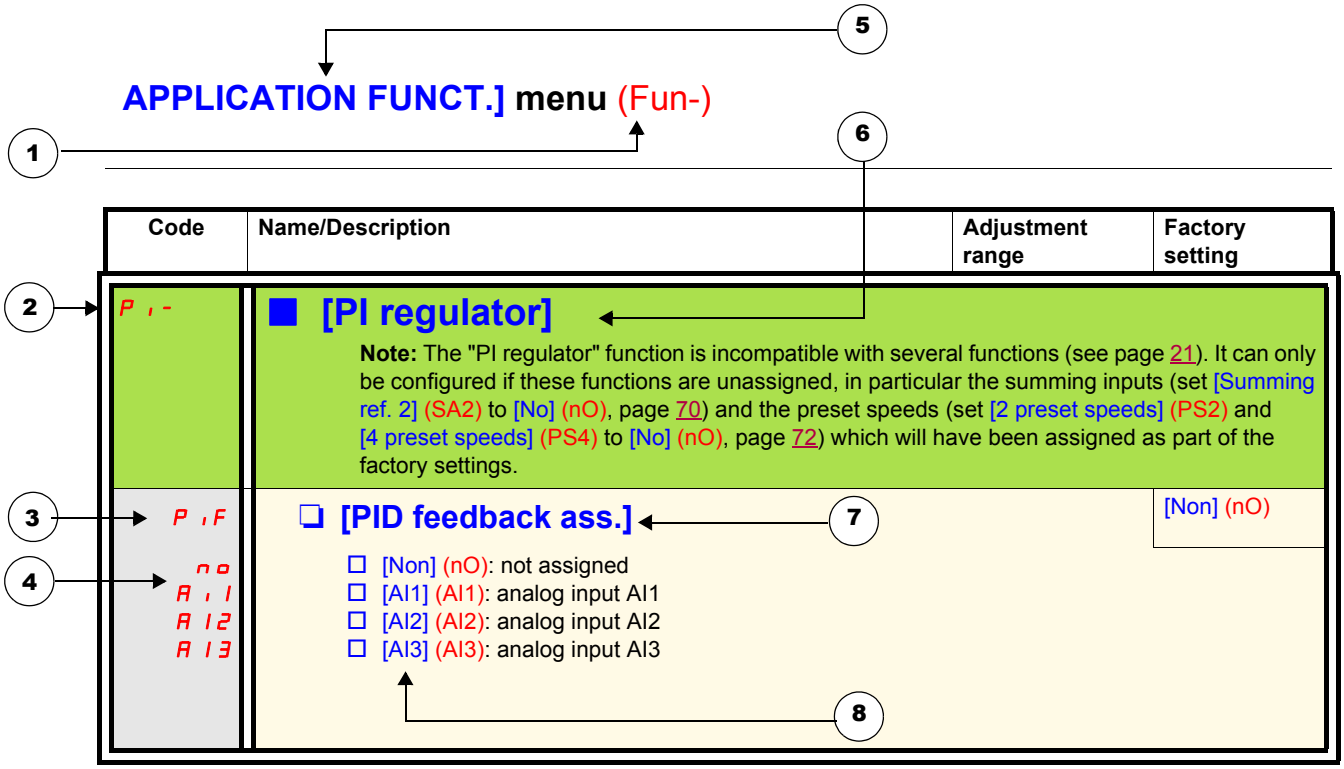

1. Name of menu on 4-digit 7-segment display
2. Submenu code on 4-digit 7-segment display
3. Parameter code on 4-digit 7-segment display
4. Parameter value on 4-digit 7-segment display
5. Name of menu on ATV61/ATV71 graphic display terminal
6. Name of submenu on ATV61/ATV71 graphic display terminal
7. Name of parameter on ATV61/ATV71 graphic display terminal
8. Value of parameter on ATV61/ATV71 graphic display terminal

Compatibility of functions

Incompatible functions

The following functions will be inaccessible or deactivated in the cases described below:

Automatic restart

This is only possible for the 2-wire level control type ([2/3 wire control] (tCC) = [2 wire] (2C) and [2 wire type] (tCt) = [Level] (LEL) or [Fwd priority] (PFO)).

Catch on the fly

This is only possible for the 2-wire level control type ([2/3 wire control] (tCC) = [2 wire] (2C) and [2 wire type] (tCt) = [Level] (LEL) or [Fwd priority] (PFO)).
This function is locked if automatic standstill injection has been configured as DC ([Auto DC injection] (AdC) = [Continuous] (Ct)).

Function compatibility table

The choice of application functions may be limited by the number of I/O and by the fact that some functions are incompatible with one another. Functions which are not listed in this table are compatible.
If there is an incompatibility between functions, the first function configured will prevent the others being configured.

To configure a function, first check that functions which are incompatible with it are unassigned, especially those which are assigned in the factory settings.

	Summing inputs (factory setting)	+/- speed (1)	Management of limit switches	Preset speeds (factory setting)	PI regulator	Jog operation	Brake control	DC injection stop	Fast stop	Freewheel stop
Summing inputs (factory setting)		●		↑	●	↑				
+/- speed (1)	●			●	●	●				
Management of limit switches					●					
Preset speeds (factory setting)	←	●			●	↑				
PI regulator	●	●	●	●		●	●			
Jog operation	←	●		←	●		●			
Brake control					●	●		●		
DC injection stop							●			↑
Fast stop										↑
Freewheel stop								←	←	

(1) Excluding special application with reference channel [Ref.2 channel] (Fr2) (see diagrams 53 and 55)

● Incompatible functions Compatible functions Not applicable

Priority functions (functions which cannot be active at the same time):
← ↑ The function marked with the arrow takes priority over the other.

Stop functions take priority over run commands.
Speed references via logic command take priority over analog references.

Compatibility of functions

Logic and analog input application functions

Each of the functions on the following pages can be assigned to one of the inputs.
A single input can activate several functions at the same time (reverse and 2nd ramp for example). **The user must therefore ensure that these functions can be used at the same time**.
The [MONITORING] (SUP-) menu ([[LOGIC INPUT CONF.]] (LIA-) parameter, page 104, and [[ANALOG INPUTS IMAGE]] (AIA-) parameter, page 104) can be used to display the functions assigned to each input in order to check their compatibility.

Before assigning a reference, command or function to a logic or analog input, the user must check that this input has not already been assigned in the factory settings and that no other input has been assigned to an incompatible or unwanted function.

- Example of incompatible function to be unassigned:
  In order to use the "+speed/-speed" function, the preset speeds and summing input 2 must first be unassigned.

The table below lists the factory-set input assignments and the procedure for unassigning them.

Assigned input	Function	Code	To unassign, set to:	Page
LI2	Run reverse	rrS	nO	48
LI3	2 preset speeds	PS2	nO	72
LI4	4 preset speeds	PS4	nO	72
AI1	Reference 1	Fr1	Anything but AI1	58
LI1	Run forward	tCC	2C or 3C	47
AI2	Summing input 2	SA2	nO	70

List of functions that can be assigned to inputs/outputs

Logic inputs	Page	Code	Factory setting
Not assigned	-	-	LI5 - LI6
Run forward	-	-	LI1
2 preset speeds	72	PS2	LI3
4 preset speeds	72	PS4	LI4
8 preset speeds	72	PS8	
16 preset speeds	73	PS16	
2 preset PI references	80	Pr2	
4 preset PI references	81	Pr4	
+ speed	77	USP	
- speed	77	dSP	
Jog operation	75	JoG	
Ramp switching	64	rPS	
2nd current limit switching	86	LC2	
Fast stop via logic input	65	FSt	
DC injection via logic input	66	dC1	
Freewheel stop via logic input	67	nSt	
Run reverse	48	rrS	LI2
External fault	93	EtF	
RESET	92	rSF	
Forced local mode	99	FLo	
Reference switching	59	rFC	
Control channel switching	60	CCS	
Motor switching	87	CHP	
Forward limit switch	89	LAF	
Reverse limit switch	89	LAr	
Fault inhibition	96	inH	

Analog inputs	Page	Code	Factory setting
Not assigned	-	-	AI3
Reference 1	58	Fr1	AI1
Reference 2	58	Fr2	
Summing input 2	70	SA2	AI2
Summing input 3	70	SA3	
PI regulator feedback	80	PIF	

List of functions that can be assigned to inputs/outputs

Analog/logic output	Page	Code	Factory setting
Not assigned	-	-	AOC/AOV
Motor current	48	oCr	
Motor frequency	48	oFr	
Motor torque	48	otr	
Power supplied by the drive	48	oPr	
Drive detected fault (logic data)	48	FLt	
Drive running (logic data)	48	run	
Frequency threshold reached (logic data)	48	FtA	
High speed (HSP) reached (logic data)	48	FLA	
Current threshold reached (logic data)	48	CtA	
Frequency reference reached (logic data)	48	SrA	
Motor thermal threshold reached (logic data)	48	tSA	
Brake sequence (logic data)	48	bLC	

Relay	Page	Code	Factory setting
Not assigned	-	-	R2
Detected fault	49	FLt	R1
Drive running	49	run	
Frequency threshold reached	49	FtA	
High speed (HSP) reached	49	FLA	
Current threshold reached	49	CtA	
Frequency reference reached	49	SrA	
Motor thermal threshold reached	49	tSA	
Brake sequence	49	bLC	
Copy of the logic input	49	LI1 to LI6	

List of functions that can be assigned to the Network and Modbus control word bits

Bits 11 to 15 of the control word	Page	Code
2 preset speeds	72	PS2
4 preset speeds	72	PS4
8 preset speeds	72	PS8
16 preset speeds	73	PS16
2 preset PI references	80	Pr2
4 preset PI references	81	Pr4
Ramp switching	64	rPS
2nd current limit switching	86	LC2
Fast stop via logic input	65	FSt
DC injection	66	dC1
External fault	93	EtF
Reference switching	59	rFC
Control channel switching	60	CCS
Motor switching	87	CHP

Checklist

Carefully read the information contained in the programming, installation and simplified manuals, as well as the information in the catalog. Before starting to use the drive, please check the following points relating to mechanical and electrical installations.
For the full range of documentation, please visit www.schneider-electric.com.

1. Mechanical installation (see the simplified and installation manuals)

- For details of the different installation types and recommendations concerning ambient temperature, please refer to the installation instructions in the simplified or installation manuals.
- Install the drive vertically in accordance with the specifications. Please refer to the installation instructions in the simplified or installation manuals.
- When using the drive, both the environmental conditions defined under standard 60721-3-3 and the levels defined in the catalog must be respected.
- Install the required options for your application. Refer to the catalog for details.

2. Electrical installation (see the simplified and installation manuals)

- Ground the drive. See the sections on how to ground equipment in the simplified and installation manuals.
- Make sure the input supply voltage matches the nominal drive voltage and connect the line supply in accordance with the simplified and installation manuals.
- Make sure you use appropriate input line fuses and circuit breakers. See the simplified and installation manuals.
- Arrange the cables for the control terminals as required (see the simplified and installation manuals). Separate the supply and control cables in accordance with EMC compatibility rules.
- The ATV312●●●●M2 and ATV312●●●●N4 ranges include an EMC filter Using an IT jumper helps reduce leakage current. This is explained in the paragraph about the internal EMC filter on the ATV312●●●●M2 and the ATV312●●●●N4 in the installation manual.
- Make sure the motor connections are right for the voltage (star, delta).

3. Using and starting up the drive

- Start the drive. [Standard mot. freq] (bFr), page 29, is displayed the first time the drive is powered up. Make sure the frequency defined by frequency bFr (the factory setting is 50 Hz) matches the motor's frequency.
- When the drive is powered up for the first time, the [Ref.1 channel] (Fr1) parameter, page 29, and the [2/3 wire control] (tCC) parameter, page 30, are displayed after [Standard mot. freq] (bFr). These parameters will need to be adjusted if you wish to control the drive locally.
- When the drive is powered up subsequently, [Ready] (rdY) is displayed on the HMI.
- The [Restore config.] (FCS) function, page 46, is used to reinitialize the drive with the factory settings.

Description of the HMI

Functions of the display and the keys

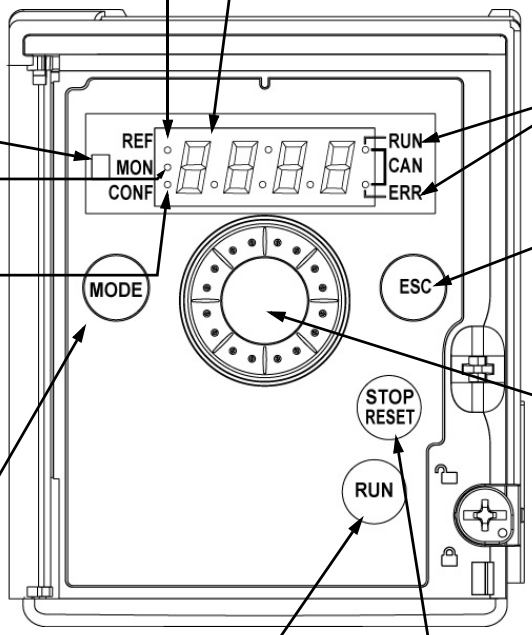

- REF LED, illuminated if [SPEED REFERENCE] (rEF-) menu is active
- Load LED
- MON LED, illuminated if [MONITORING] (SUP-) menu is active
- CONF LED, illuminated if the [SETTINGS] (SEt-), [MOTOR CONTROL] (drC-),[INPUTS / OUTPUTS CFG] (I-O-), [COMMAND] (CtL-), [APPLICATION FUNCT] (FUn-), [FAULT MANAGEMENT] (FLt-) or [COMMUNICATION] (COM-) menus are active
- 4 x 7 segment display
- 2 CANopen status LEDs
- Used to quit a menu or parameter or to clear the value displayed in order to revert to the value in the memory
- In LOCAL configuration, 2s press on ESC button switches between the control/ programming modes
- Jog dial - can be used for navigation by turning it clockwise or counter-clockwise - pressing the jog dial enables the user to make a selection or confirm information. = *ENT*

Functions as a potentiometer in LOCAL configuration and in REMOTE configuration if [Ref.1 channel] (Fr1-) in the [COMMAND] (CtL-) menu is set to [Image input AIV1] (AIV1)

MODE button (1): 3s press on MODE button switches between the REMOTE/LOCAL configurations. If [SPEED REFERENCE] (rEF-) is displayed, this will take you to the [SETTINGS] (SEt-) menu. If not, it will take you to the [SPEED REFERENCE] (rEF-) menu.

RUN button: Controls powering up of the motor for forward running in LOCAL configuration and in REMOTE configuration if the [2/3 wire control] (tCC) parameter in the [INPUTS /OUTPUTS CFG] (I-O-) menu is set to [Local] (LOC), page 47 (could be hidden by door if function disabled)

STOP/RESET button
- Enables detected fault to be reset
- Can be used to control motor stopping
  - If [2/3 wire control] (tCC) is not set to [Local] (LOC), freewheel stop
  - If [2/3 wire control] (tCC) is set to [Local] (LOC), stop on ramp or freewheel stop during DC injection braking

Note1: In LOCAL configuration, the three Leds REF, MON,and CONF are blinking simultaneously in programming mode and are working as a Led chaser in control mode.

Normal display, with no fault code displayed and no startup:

- 43.0 : Displays the parameter selected in the [MONITORING] (SUP-) menu (default: motor frequency). If the current is limited, the display flashes. In such cases, CLI will appear at the top left if an ATV61/ATV71 graphic display terminal is connected to the drive.
- init: Initialization sequence
- rdy: Drive ready
- dCb: DC injection braking in progress
- nSt: Freewheel stop
- FSt: Fast stop
- tun : Auto-tuning in progress

In the event of a detected fault, the display will flash to notify the user accordingly. If an ATV61/ATV71 graphic display terminal is connected, the name of the detected fault will be displayed.

(1) If the drive is locked by a code ([PIN code 1] (COd), page 103), pressing the Mode key enables you to switch from the [MONITORING] (SUP-) menu to the [SPEED REFERENCE] (rEF-) menu and vice versa. It is no longer possible to switch between LOCAL and REMOTE configurations.

Easy REMOTE and LOCAL configuration

The LOCAL configuration allows to activate automatically the embedded RUN button and the jog dial as a potentiometer.
In that configuration, the speed adjustment will also be effective on remote keypads. MODE button on ATV12 remote display terminal and on ATV61/71 graphic display terminal (function key F4) is also active to switch from one configuration to another.

[Ref.1 channel] (Fr1) is set to [AI Virtual 1] (AIV1) and [2/3 wire control] (tCC) are set to [Local] (LOC) when switching to LOCAL configuration.
Choose the configuration (REMOTE or LOCAL) before starting the parameters adjustment of the drive.
For parameters interdependencies reasons, switching from one configuration to another will change other parameters (for example : Input/Output assignment will return to their factory value).

⚠ DANGER

UNINTENDED EQUIPMENT OPERATION

When switching from REMOTE to LOCAL configuration, all the assignments involving the logic inputs will revert to their default values.

- Check that this change is compatible with the wiring diagram used.

Failure to follow these instructions will result in death or serious injury.

Structure of the menus

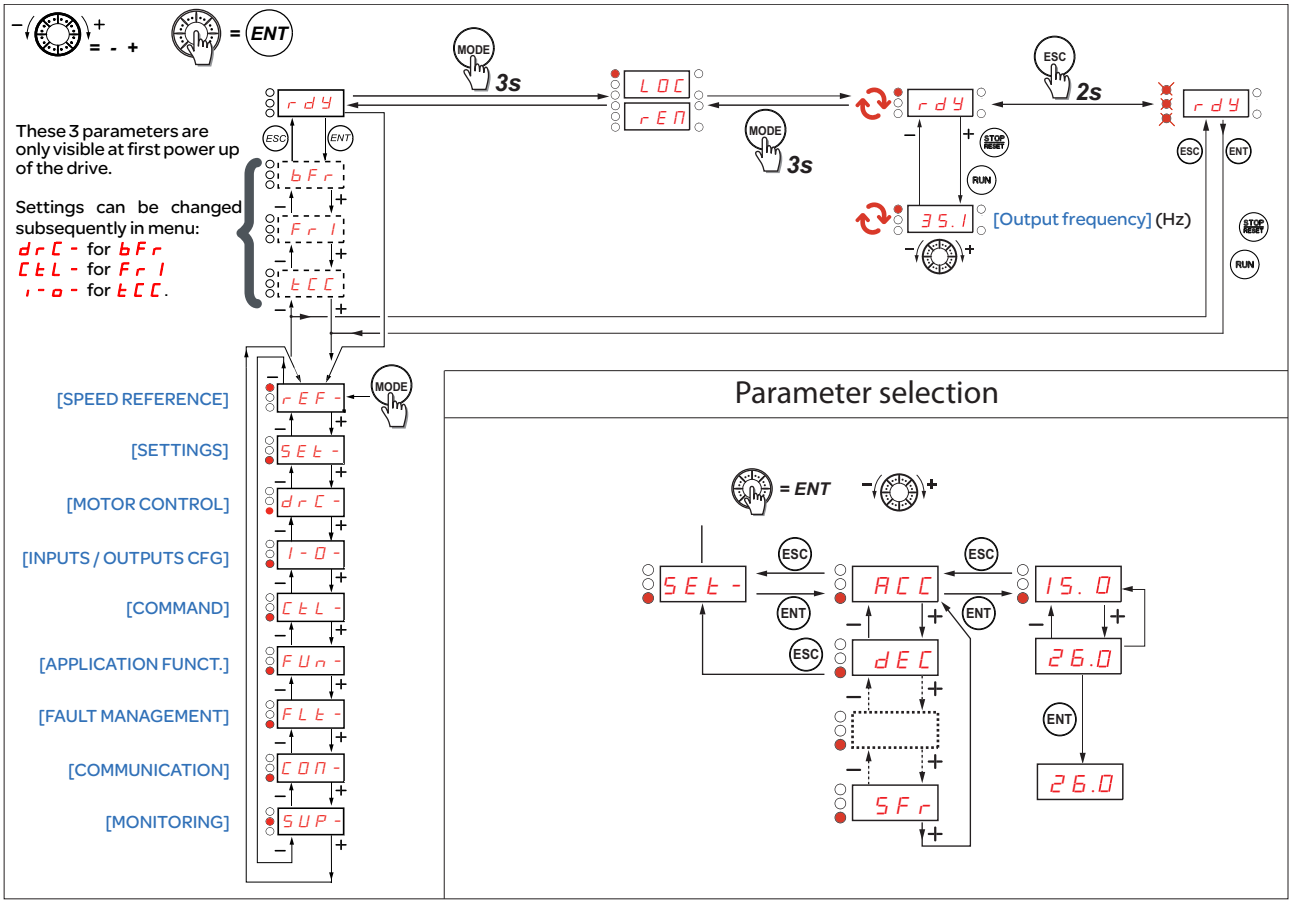

Configuring the [Standard mot. freq] (bFr), [2/3 wire control] (tCC), and [Ref.1 channel] (Fr1) parameters

These parameters can only be modified when the drive is stopped and no run command is present.

Code	Description	Adjustment range	Factory setting
bFr	❏ **[Standard mot. freq]** This parameter is only visible the first time the drive is powered up. It can be modified at any time in the [MOTOR CONTROL] (drC-) menu. 50 [50Hz IEC] (50): 50 Hz 60 [60Hz NEMA] (60): 60 Hz This parameter modifies the presets of the following parameters: [High speed] (HSP), page 33, [Freq. threshold] (Ftd), page 39, [Rated motor freq.] (FrS), page 41, and [Max frequency] (tFr), page 44		[50Hz IEC] (50)
Fr1	❏ **[Ref.1 channel]** AI1 ☐ [AI1] (AI1) - Analog input AI1 AI2 ☐ [AI2] (AI2) - Analog input AI2 AI3 ☐ [AI3] (AI3) - Analog input AI3 AIU1 ☐ [AI Virtual 1] (AIV1) - In terminal control mode, the jog dial functions as a potentiometer. If [ACCESS LEVEL] (LAC) = [Level 2] (L2) or [Level 3] (L3), the following additional assignments are possible: UPdt ☐ [+/- SPEED] (UPdt): +/- speed reference via LI. See configuration page 77. UPdH ☐ [+/-spd HMI] (UPdH): +/- speed reference by turning the jog dial on the ATV312 keypad. To use, display the frequency [Output frequency] (rFr), page 101. The +/- speed function via the keypad or the terminal is controlled from the [MONITORING] (SUP-) menu by selecting the [Output frequency] (rFr) parameter. If [ACCESS LEVEL] (LAC) = [Level 3] (L3), the following additional assignments are possible: LCC ☐ [HMI] (LCC) reference via the remote display terminal, [HMI Frequency ref.] (LFr) parameter in the [SETTINGS] (SEt-) menu, page 32 Mdb ☐ [Modbus] (Mdb): Reference via Modbus nEt ☐ [Com. card] (nEt): Reference via network communication protocol		[AI1] (AI1)

Code	Description	Adjustment range	Factory setting
tCC	❑ [2/3 wire control]		[2 wire] (2C)

⚠ DANGER

UNINTENDED EQUIPMENT OPERATION

When the [2/3 wire control] (tCC) parameter is changed, the [Reverse assign.] (rrS) parameter, page 48, and the [2 wire type] (tCt) parameter, page 47, and all the assignments involving the logic inputs will revert to their default values.
Check that this change is compatible with the wire diagram used.

Failure to follow these instructions will result in death or serious injury.

Control configuration:

- ☐ 2C [2 wire] (2C): 2-wire control
- ☐ 3C [3 wire] (3C): 3-wire control
- ☐ LoC [Local] (LOC): Local control (RUN/STOP/RESET drive) (invisible if [ACCESS LEVEL] (LAC) = [Level 3] (L3), page 58)

2-wire control: The open or closed state of the input controls running or stopping.
Wiring example:
LI1: Forward
LIx: Reverse

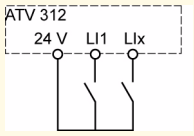

2 s

3-wire control (pulse control): A "forward" or "reverse" pulse is sufficient to control startup, a "stop" pulse is sufficient to control stopping.
Wiring example:
LI1: Stop
LI2: Forward
LIx: Reverse

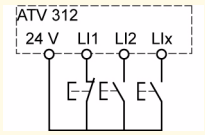

2 s The jog dial (ENT) needs to be pressed and held down (for 2 s) to change the assignment for this parameter.

[SPEED REFERENCE] (rEF-) menu

The [SPEED REFERENCE] (rEF-) menu displays [HMI Frequency ref.] (LFr), [Image input AIV1] (AIV1) or [Frequency ref.] (FrH) depending on which control channel is active.

During local control, the HMI's jog dial functions as a potentiometer, making it possible to increase or reduce the reference value within limits defined by the [Low speed] (LSP) and [High speed] (HSP) parameters.

When local control is deactivated, by the [Ref.1 channel] (Fr1) parameter, only the reference values are displayed. The value will be read-only and can only be changed via the jog dial (the speed reference is supplied by an AI or another source).

The reference displayed will depend on how the drive has been configured.

Code	Description	Factory setting
LFr	❑ **[HMI Frequency ref.]** This parameter only appears if the function has been enabled. It is used to change the speed reference from the remote control. ENT does not have to be pressed to enable a change of reference.	0 to 500 Hz
AIuI	❑ **[Image input AIV1]** Used to amend the speed reference via the jog dial	0 to 100%
FrH	❑ **[Frequency ref.]** This parameter is read-only. It enables you to display the speed reference applied to the motor, regardless of which reference channel has been selected.	LSP to HSP Hz

[SETTINGS] (SEt-) menu

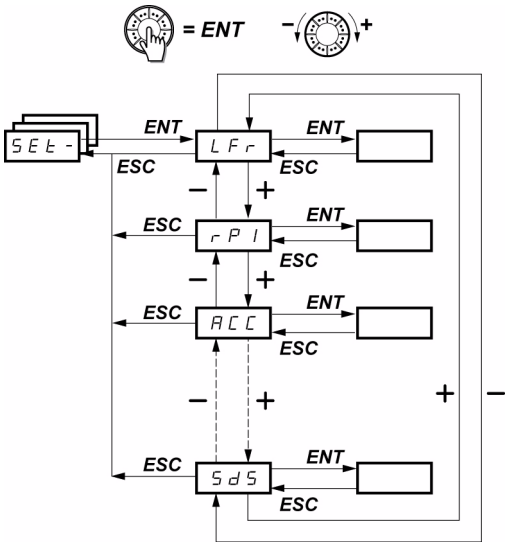

Speed reference via the display terminal

Scaling factor for the [Cust. output value] (SPd1) parameter

The adjustment parameters can be modified with the drive running or stopped.
Note: Changes should preferably be made with the drive stopped.

Code	Description	Adjustment range	Factory setting
LFr ★	❑ **[HMI Frequency ref.]** This parameter is displayed if [HMI command] (LCC) = [Yes] (YES), page 61 or if [Ref.1 channel] (Fr1)/[Ref.2 channel] (Fr2) = [HMI] (LCC) page 58, and if a remote display terminal is connected. In such cases, [HMI Frequency ref.] (LFr) can also be accessed via the drive's keypad. [HMI Frequency ref.] (LFr) is reinitialized to 0 when power is switched off.	0 to HSP	-
rPI ★	❑ **[Internal PID ref.]** Parameter is only visible if [PID feedback ass.] (PIF) is not set to [No] (nO), page 80.	0.0 to 100%	0%
ACC	❑ **[Acceleration]** Defined to accelerate from 0 to the nominal frequency [Rated motor freq.] (FrS) in the [MOTOR CONTROL] (drC-) menu.	In accordance with inr, page 63	3 s
AC2 ★	❑ **[Acceleration 2]** Parameter can be accessed if [Ramp 2 threshold] (Frt) > 0, page 64, or if [Ramp switch ass.] (rPS) is assigned, page 64.	In accordance with inr, page 63	5 s
dE2 ★	❑ **[Deceleration 2]** Parameter can be accessed if [Ramp 2 threshold] (Frt) > 0, page 64, or if [Ramp switch ass.] (rPS) is assigned, page 64.	In accordance with inr, page 63	5 s
dEC	❑ **[Deceleration]** Defined to decelerate from the nominal frequency [Rated motor freq.] (FrS) (parameter in the [MOTOR CONTROL] (drC-)) menu to 0. Check that the value for [Deceleration] (dEC) is not too low in relation to the load to be stopped.	In accordance with inr, page 63	3 s

★ These parameters only appear if the corresponding function has been selected in another menu. When the parameters can also be accessed and set from within the configuration menu for the corresponding function, their description is detailed in these menus, on the pages indicated, to aid programming.

[SETTINGS] (SEt-) menu

Code	Description	Adjustment range	Factory setting
tA1 ★	❑ **[Begin Acc round]** Parameter can be accessed if the [Ramp type] (rPt) = [Customized] (CUS), page 62.	0 to 100	10
tA2 ★	❑ **[End Acc round]** Parameter can be accessed if the [Ramp type] (rPt) = [Customized] (CUS), page 62.	0 to (100-tA1)	10
tA3 ★	❑ **[Begin Dec round]** Parameter can be accessed if the [Ramp type] (rPt) = [Customized] (CUS), page 62.	0 to 100	10
tA4 ★	❑ **[End Dec round]** Parameter can be accessed if the [Ramp type] (rPt) = [Customized] (CUS), page 62.	0 to (100-tA3)	10
LSP	❑ **[Low speed]** Motor frequency at min. reference	0 to HSP	0
HSP	❑ **[High speed]** Motor frequency at max. reference: Ensure that this setting is appropriate for the motor and the application.	LSP to tFr	bFr
ItH	❑ **[Mot. therm. current]** Set [Mot. therm. current] (ItH) to the nominal current indicated on the motor's rating plate. If you wish to suppress thermal protection, see [Overload fault mgt] (OLL), page 94.	0.2 to 1.5 In (1)	In accordance with the drive rating
UFr	❑ **[IR compensation]** - For [U/F mot 1 selected] (UFt) = [SVC] (n) or [Energy sav.] (nLd), page 44: IR compensation - For [U/F mot 1 selected] (UFt) = [Cst. torque] (L) or [Var. torque] (P), page 44: Voltage boost Used to optimize the torque at very low speed (increase [IR compensation] (UFr) if the torque is insufficient). Check that the value for [IR compensation] (UFr) is not too high when the motor is in a hot state otherwise some instabilities can occur. **Note:** Changing [U/F mot 1 selected] (UFt), page 44, will cause [IR compensation] (UFr) to return to its factory setting (20%).	0 to 100%	20%
FLG ★	❑ **[FreqLoopGain]** Parameter can only be accessed if [U/F mot 1 selected] (UFt) = [SVC] (n) or [Energy sav.] (nLd), page 44. The FLG parameter adjusts the drive's ability to follow the speed ramp on the basis of the inertia of the machine being driven. Too high a gain may result in operating instability. 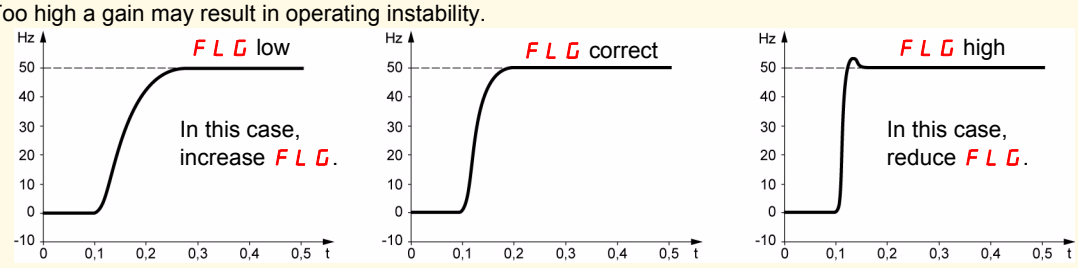	1 to 100%	20%

(1) In corresponds to the nominal drive current indicated in the Installation Manual and on the drive nameplate.

★ These parameters only appear if the corresponding function has been selected in another menu. When the parameters can also be accessed and set from within the configuration menu for the corresponding function, their description is detailed in these menus, on the pages indicated, to aid programming.

Code	Description	Adjustment range	Factory setting
StA ★	❑ **[Fr.Loop.Stab]** Parameter can only be accessed if [U/F mot 1 selected] (UFt) = [SVC] (n) or [Energy sav.] (nLd), page 44. Used to adapt the return to steady state after a speed transient (acceleration or deceleration), according to the dynamics of the machine. Gradually increase the stability to avoid any overspeed. 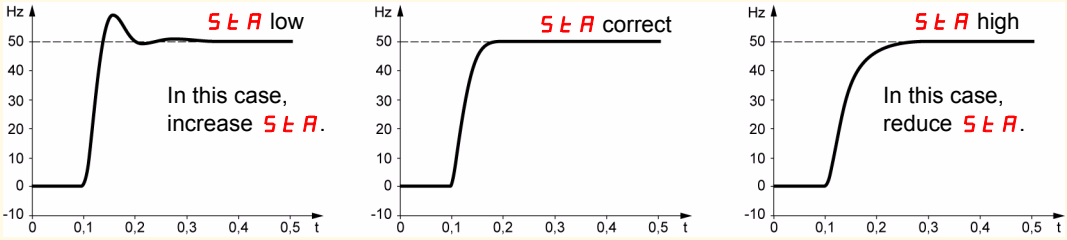	1 to 100%	20%
SLP ★	❑ **[Slip compensation]** Parameter can only be accessed if [U/F mot 1 selected] (UFt) = [SVC] (n) or [Energy sav.] (nLd), page 44. Adjusts the slip compensation around the value set by the nominal motor speed. The speeds given on motor rating plates are not necessarily exact. • If slip setting < actual slip: the motor is not rotating at the correct speed in steady state. • If slip setting > actual slip: the motor is overcompensated and the speed is unstable.	0 to 150%	100%
IdC ★	❑ **[DC inject. level 1]** (2) **CAUTION** **RISK OF DAMAGE TO THE MOTOR** • Check that the motor will withstand this current without overheating.. **Failure to follow these instructions can result in equipment damage.** Parameter can be accessed if [Type of stop] (Stt) = [DC injection] (dCI), page 65, or if [DC injection assign.] (dCI) is not set to [No] (nO), page 66. After 5 seconds, the injection current is limited to 0.5 [Mot. therm. current] (ItH) if set to a higher value.	0 to In (1)	0.7 In (1)
tdC ★	❑ **[DC injection time 2]** (2) **CAUTION** **RISK OF DAMAGE TO THE MOTOR** • Long periods of DC injection braking can cause overheating and damage the motor. • Protect the motor by avoiding long periods of DC injection braking. **Failure to follow these instructions can result in equipment damage.** Parameter can be accessed if [Type of stop] (Stt) = [DC injection] (dCI) , page 65.	0.1 to 30 s	0.5 s
tdC1 ★	❑ **[Auto DC inj. time 1]** **CAUTION** **RISK OF DAMAGE TO THE MOTOR** • Long periods of DC injection braking can cause overheating and damage the motor. • Protect the motor by avoiding long periods of DC injection braking. **Failure to follow these instructions can result in equipment damage.** Parameter can be accessed if [Auto DC injection] (AdC) is not set to [No] (nO), page 68.	0.1 to 30 s	0.5 s

(1) In corresponds to the nominal drive current indicated in the Installation Manual and on the drive nameplate.
(2) **Note:** These settings are not related to the "automatic standstill DC injection" function.

★ These parameters only appear if the corresponding function has been selected in another menu. When the parameters can also be accessed and set from within the configuration menu for the corresponding function, their description is detailed in these menus, on the pages indicated, to aid programming.

Code	Description	Adjustment range	Factory setting
SdC 1	❑ [Auto DC inj. level 1]	0 to 1.2 In (1)	0.7 In (1)

CAUTION

RISK OF DAMAGE TO THE MOTOR

- Check that the motor will withstand this current without overheating.

Failure to follow these instructions can result in equipment damage.

★ Parameter can be accessed if [Auto DC injection] (AdC) is not set to [No] (nO), page 68.
Note: Check that the motor will withstand this current without overheating.

tdC2	❑ [Auto DC inj. time 2]	0 to 30 s	0 s

CAUTION

RISK OF DAMAGE TO THE MOTOR

- Long periods of DC injection braking can cause overheating and damage the motor.
- Protect the motor by avoiding long periods of DC injection braking.

Failure to follow these instructions can result in equipment damage.

★ Parameter can be accessed if [Auto DC injection] (AdC) is not set to [No] (nO), page 68.

SdC2	❑ [Auto DC inj. level 2]	0 to 1.2 In (1)	0.5 In (1)

CAUTION

RISK OF DAMAGE TO THE MOTOR

- Check that the motor will withstand this current without overheating.

Failure to follow these instructions can result in equipment damage.

★ Parameter can be accessed if [Auto DC injection] (AdC) is not set to [No] (nO), page 68.
Note: Check that the motor will withstand this current without overheating.

(1) In corresponds to the nominal drive current indicated in the Installation Manual and on the drive nameplate.
(2) **Note:** These settings are not related to the "automatic standstill DC injection" function.

★ These parameters only appear if the corresponding function has been selected in another menu. When the parameters can also be accessed and set from within the configuration menu for the corresponding function, their description is detailed in these menus, on the pages indicated, to aid programming.

Code	Description	Adjustment range	Factory setting
JPF	❑ **[Skip Frequency]**	0 to 500 Hz	0 Hz
	Helps to prevent prolonged operation at a frequency range of ± 1 Hz around [Skip Frequency] (JPF). This function helps to prevent a critical speed which leads to resonance. Setting the function to 0 renders it inactive.		
JF2	❑ **[Skip Frequency 2]**	1 to 500 Hz	0 Hz
	Helps to prevent prolonged operation at a frequency range of ± 1 Hz around [Skip Frequency 2] (JF2). This function helps to prevent a critical speed which leads to resonance. Setting the function to 0 renders it inactive.		
JGF ★	❑ **[Jog frequency]**	0 to 10 Hz	10 Hz
	Parameter can be accessed if [JOG] (JOG) is not set to [No] (nO), page 75.		
rPG ★	❑ **[PID prop. gain]**	0.01 to 100	1
	Parameter is only visible if [PID feedback ass.] (PIF) is not set to [No] (nO), page 80. It provides dynamic performance when PI feedback is changing quickly.		
rIG ★	❑ **[PID integral gain]**	0.01 to 100/s	1
	Parameter is only visible if [PID feedback ass.] (PIF) is not set to [No] (nO), page 80. It provides static precision when PI feedback is changing slowly.		
FbS ★	❑ **[PID fbk scale factor]**	0.1 to 100	1
	Parameter is only visible if [PID feedback ass.] (PIF) is not set to [No] (nO), page 80. For adapting the process.		
PIC nO / YES ★	❑ **[PID correct. reverse]**		[No] (nO)
	Parameter is only visible if [PID feedback ass.] (PIF) is not set to [No] (nO), page 80. ☐ [No] (nO): Normal ☐ [Yes] (YES): Reverse		
rP2 ★	❑ **[Preset ref. PID 2]**	0 to 100%	30%
	Parameter is only visible if [PID feedback ass.] (PIF) is not set to [No] (nO), page 80, and if [2 preset PID ref.] (Pr2), page 80, has been enabled by the input selection.		
rP3 ★	❑ **[Preset ref. PID 3]**	0 to 100%	60%
	Parameter is only visible if [PID feedback ass.] (PIF) is not set to [No] (nO), page 80, and if [4 preset PID ref.] (Pr4), page 81, has been enabled by the input selection.		
rP4 ★	❑ **[Preset ref. PID 4]**	0 to 100%	90%
	Parameter is only visible if [PID feedback ass.] (PIF) is not set to [No] (nO), page 80, and if [4 preset PID ref.] (Pr4), page 81, has been enabled by the input selection.		
SP2 ★	❑ **[Preset speed 2]**	0 to 500 Hz	10 Hz
	See page 73.		

★ These parameters only appear if the corresponding function has been selected in another menu. When the parameters can also be accessed and set from within the configuration menu for the corresponding function, their description is detailed in these menus, on the pages indicated, to aid programming.

[SETTINGS] (SEt-) menu

Code	Description	Adjustment range	Factory setting
SP3 ★	❑ [Preset speed 3] See page 73.	0 to 500 Hz	15 Hz
SP4 ★	❑ [Preset speed 4] See page 73.	0 to 500 Hz	20 Hz
SP5 ★	❑ [Preset speed 5] See page 73.	0 to 500 Hz	25 Hz
SP6 ★	❑ [Preset speed 6] See page 73.	0 to 500 Hz	30 Hz
SP7 ★	❑ [Preset speed 7] See page 73.	0 to 500 Hz	35 Hz
SP8 ★	❑ [Preset speed 8] See page 73.	0 to 500 Hz	40 Hz
SP9 ★	❑ [Preset speed 9] See page 73.	0 to 500 Hz	45 Hz
SP10 ★	❑ [Preset speed 10] See page 73.	0 to 500 Hz	50 Hz
SP11 ★	❑ [Preset speed 11] See page 74.	0 to 500 Hz	55 Hz
SP12 ★	❑ [Preset speed 12] See page 74.	0 to 500 Hz	60 Hz
SP13 ★	❑ [Preset speed 13] See page 74.	0 to 500 Hz	70 Hz
SP14 ★	❑ [Preset speed 14] See page 74.	0 to 500 Hz	80 Hz
SP15 ★	❑ [Preset speed 15] See page 74.	0 to 500 Hz	90 Hz
SP16 ★	❑ [Preset speed 16] See page 74.	0 to 500 Hz	100 Hz

★ These parameters only appear if the corresponding function has been selected in another menu. When the parameters can also be accessed and set from within the configuration menu for the corresponding function, their description is detailed in these menus, on the pages indicated, to aid programming.

Code	Description	Adjustment range	Factory setting
CL1	❑ [Current Limitation]	0.25 to 1.5 In (1)	1.5 In (1)

CAUTION

RISK OF DAMAGE TO THE MOTOR AND THE DRIVE

- Check that the motor will withstand this current, particularly in the case of permanent magnet synchronous motors, which are susceptible to demagnetization.
- Check that the profile mission complies with the derating curve given in the installation manual.

Failure to follow these instructions can result in equipment damage.

Used to limit the torque and the temperature rise of the motor.

CL2	❑ [I Limit. 2 value]	0.25 to 1.5 In (1)	1.5 In (1)

CAUTION

RISK OF DAMAGE TO THE MOTOR AND THE DRIVE

- Check that the motor will withstand this current, particularly in the case of permanent magnet synchronous motors, which are susceptible to demagnetization.
- Check that the profile mission complies with the derating curve given in the installation manual.

Failure to follow these instructions can result in equipment damage.

★ Parameter is only visible if [Current limit 2] (LC2) is not set to [No] (nO), page 86.

tLS	❑ [Low speed time out]	0 to 999.9 s	0 (no time limit)

After operating at [Low speed] (LSP) for a given time, the motor is stopped automatically. The motor restarts if the frequency reference is greater than the [Low speed] (LSP) and if a run command is still present.
Note: Value 0 corresponds to an unlimited period.

rSL	❑ [PID wake up thresh.]	0 to 100%	0%

⚠ DANGER

UNINTENDED EQUIPMENT OPERATION

- Check that unintended restarts will not present any danger.

Failure to follow these instructions will result in death or serious injury

★ Parameter is only visible if [PID feedback ass.] (PIF) is not set to [No] (nO), page 80.
If the "PI" and "Low speed operating time" [Low speed time out] (tLS) functions, page 38, are configured at the same time, the PI regulator may attempt to set a speed lower than [Low speed] (LSP).
This results in unsatisfactory operation, which consists of starting, operating at [Low speed] (LSP), then stopping, and so on.
The [PID wake up thresh.] (rSL) parameter (restart error threshold) is used to set a minimum PID error threshold for restarting after a stop at prolonged [Low speed] (LSP).
The function is inactive if [Low speed time out] (tLS) = 0.

(1) In corresponds to the nominal drive current indicated in the Installation Manual and on the drive nameplate.

★ These parameters only appear if the corresponding function has been selected in another menu. When the parameters can also be accessed and set from within the configuration menu for the corresponding function, their description is detailed in these menus, on the pages indicated, to aid programming.

Code	Description	Adjustment range	Factory setting
uFr2 ★	❑ **[IR compensation 2]** For [U/F mot.2 selected] (UFt2) = [SVC] (n) or [Energy sav.] (nLd): IR compensation. For [U/F mot.2 selected] (UFt2) = [Cst. torque] (L) or [Var. torque] (P): voltage boost. Used to optimize the torque at very low speed (increase [IR compensation 2] (UFr2) if the torque is insufficient). Check that the value for [IR compensation 2] (UFr2) is not too high when the motor is in a hot state otherwise some instabilities can occur. Changing [U/F mot.2 selected] (UFt2) will cause [IR compensation 2] (UFr2) to return to its factory setting (20%).	0 to 100%	20%
FLG2 ★	❑ **[FreqLoopGain 2]** Parameter can only be accessed if [U/F mot.2 selected] (UFT2) = [SVC] (n) or [Energy sav.] (nLd), page 88. The [FreqLoopGain 2] (FLG2) parameter adjusts the drive's ability to follow the speed ramp on the basis of the inertia of the machine being driven. Too high a gain may result in operating instability. 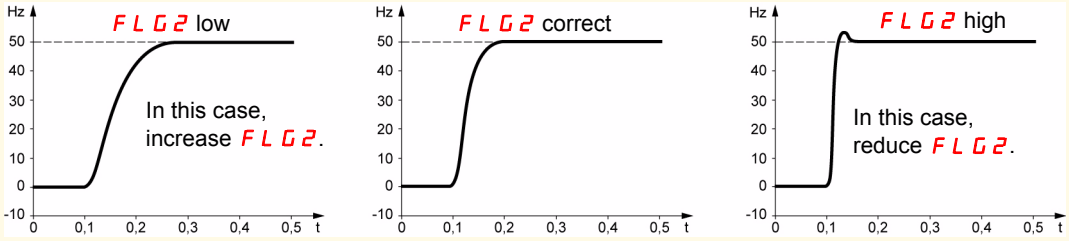	0 to 100%	20%
StA2 ★	❑ **[Freq. loop stability 2]** Parameter can only be accessed if [U/F mot.2 selected] (UFT2) = [SVC] (n) or [Energy sav.] (nLd), page 88. Used to adapt the return to steady state after a speed transient (acceleration or deceleration), according to the dynamics of the machine. Gradually increase the stability to avoid any overspeed. 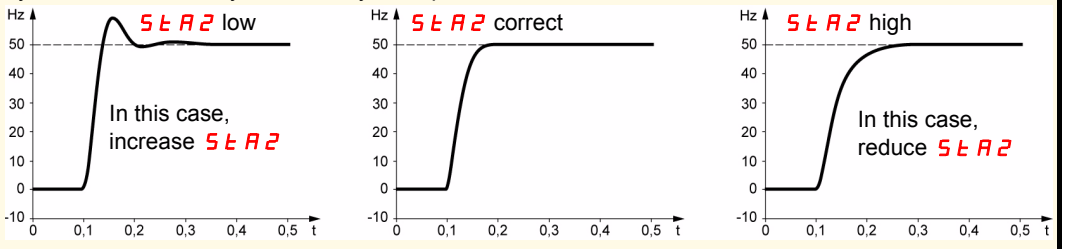	0 to 100%	20%
SLP2 ★	❑ **[Slip compensation 2]** Parameter can only be accessed if [U/F mot.2 selected] (UFT2) = [SVC] (n) or [Energy sav.] (nLd), page 88. Adjusts the slip compensation around the value set by the nominal motor speed. The speeds given on motor rating plates are not necessarily exact. • If slip setting < actual slip: The motor is not rotating at the correct speed in steady state. • If slip setting > actual slip: The motor is overcompensated and the speed is unstable.	0 to 150%	100%
Ftd	❑ **[Freq. threshold]** Threshold beyond which the contact on the relay ([R1 Assignment] (r1) or [R2 Assignment] (r2) = [Freq.Th.att.] (FtA)) closes or output AOV = 10 V ([Analog./logic output] (dO) = [Freq. limit] (FtA)).	0 to 500 Hz	bFr
ttd	❑ **[Motor therm. level]** Threshold beyond which the contact on the relay ([R1 Assignment] (r1) or [R2 Assignment] (r2) = [Th.mot. att.] (tSA)) closes or output AOV = 10 V ([Analog./logic output] (dO) = [Drv thermal] (tSA)).	1 to 118%	100%
Ctd	❑ **[Current threshold]** Threshold beyond which the contact on the relay ([R1 Assignment] (r1) or [R2 Assignment] (r2) = [I attained] (CtA)) closes or output AOV = 10 V ([Analog./logic output] (dO) = [Current limit] (CtA)).	0 to 1.5 In (1)	In (1)

(1) In corresponds to the nominal drive current indicated in the Installation Manual and on the drive nameplate.

★ These parameters only appear if the corresponding function has been selected in another menu. When the parameters can also be accessed and set from within the configuration menu for the corresponding function, their description is detailed in these menus, on the pages indicated, to aid programming.

Code	Description	Adjustment range	Factory setting
SdS	❑ **[Scale factor display]** Used to display a value in proportion to the output frequency [Output frequency] (rFr): the machine speed, the motor speed, etc. • If [Scale factor display] (SdS) ⩽ 1, [Cust. output value] (SPd1) is displayed (possible definition = 0.01) • If 1 < [Scale factor display] (SdS) ⩽ 10, [Cust. output value] (SPd2) is displayed (possible definition = 0.1) • If [Scale factor display] (SdS) > 10, [Cust. output value] (SPd3) is displayed (possible definition = 1) • If [Scale factor display] (SdS) > 10 and [Scale factor display] (SdS) x [Output frequency] (rFr) > 9,999: the display will show [Cust. output value] (SPd3) = $\frac{\text{[Scale factor display] (SdS) x [Output frequency] (rFr)}}{1000}$ to 2 decimal places example: for 24,223, display will show 24.22 - If [Scale factor display] (SdS) > 10 and [Scale factor display] (SdS) x [Output frequency] (rFr) > 65,535, display locked at 65.54 Example: Display motor speed for 4-pole motor, 1,500 rpm at 50 Hz (synchronous speed): [Scale factor display] (SdS) = 30 [Cust. output value] (SPd3) = 1,500 at [Output frequency] (rFr) = 50 Hz	0.1 to 200	30
SFr	❑ **[Switching freq.]** (1) Parameter can also be accessed in the [MOTOR CONTROL] (drC-) menu. The frequency can be adjusted to reduce the noise generated by the motor. If the frequency has been set to a value higher than 4 kHz, in the event of excessive temperature rise, the drive will automatically reduce the switching frequency and increase it again once the temperature has returned to normal.	2.0 to 16 kHz	4 kHz

(1) Parameter can also be accessed in the [MOTOR CONTROL] (drC-) menu.

[MOTOR CONTROL] (drC-) menu

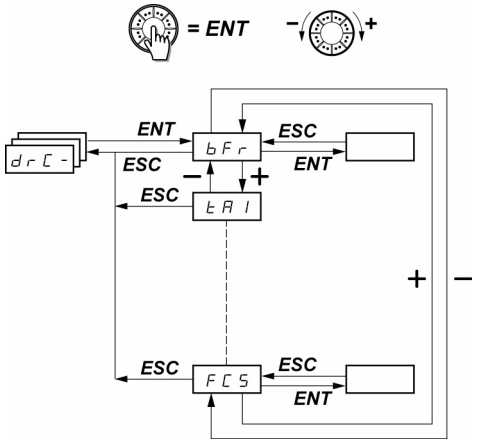

Standard motor frequency

Return to factory settings/Restore configuration

With the exception of [Auto tuning] (tUn), which can power up the motor, parameters can only be changed in stop mode, with no run command present.

On the optional ATV31 remote display terminal, this menu can be accessed with the switch in the position.

Drive performance can be optimized by:
- Entering the values given on the motor rating plate in the Drive menu
- Performing an auto-tune operation (on a standard asynchronous motor)

Code	Description	Adjustment range	Factory setting
bFr 50 60	❑ **[Standard mot. freq]** [50Hz IEC] (50): 50 Hz: IEC [60Hz NEMA] (60): 60 Hz: NEMA This parameter modifies the presets of the following parameters: [High speed] (HSP), page 33, [Freq. threshold] (Ftd), page 39, [Rated motor freq.] (FrS), page 41, and [Max frequency] (tFr), page 44.		[50Hz IEC] (50)
UnS	❑ **[Rated motor volt.]** Nominal motor voltage given on the rating plate. When the line voltage is lower than the nominal motor voltage, set [Rated motor volt.] (UnS) to the same value as the line voltage for the drive terminals. ATV312●●●M2: 100 to 240 V ATV312●●●M3: 100 to 240 V ATV312●●●N4: 100 to 500 V ATV312●●●S6: 100 to 600 V	In accordance with the drive rating	In accordance with the drive rating
FrS	❑ **[Rated motor freq.]** Nominal motor frequency marked on the rating plate. The factory setting is 50 Hz, or 60 Hz if [Standard mot. freq] (bFr) is set to 60 Hz. **Note:** The ratio $\frac{\text{[Rated motor volt.] (UnS) (in volts)}}{\text{[Rated motor freq.] (FrS) (in Hz)}}$ must not exceed the following values: ATV312●●●M2: 7 max. ATV312●●●M3: 7 max. ATV312●●●N4: 14 max. ATV312●●●S6: 17 max. The factory setting is 50 Hz, or preset to 60 Hz if [Standard mot. freq] (bFr) is set to 60 Hz.	10 to 500 Hz	50 Hz
nCr	❑ **[Rated mot. current]** Nominal motor current given on the rating plate.	0.25 to 1.5 In (1)	In accordance with the drive rating

(1) In corresponds to the nominal drive current indicated in the Installation Manual and on the drive nameplate.

Code	Description	Adjustment range	Factory setting
nSP	❑ **[Rated motor speed]** 0 to 9,999 rpm then 10.00 to 32.76 krpm If, rather than the nominal speed, the nameplate indicates the synchronous speed and the slip in Hz or as a %, calculate the nominal speed as follows: • Nominal speed = synchronous speed x $\frac{100 - \text{slip as a \%}}{100}$ or • Nominal speed = synchronous speed x $\frac{50 - \text{slip in Hz}}{50}$ (50 Hz motors) or • Nominal speed = synchronous speed x $\frac{60 - \text{slip in Hz}}{60}$ (60 Hz motors)	0 to 32,760 rpm	In accordance with the drive rating
CoS	❑ **[Motor 1 Cosinus Phi]** Motor Cos Phi given on the motor rating plate	0.5 to 1	In accordance with the drive rating
rSC nO InIt 8888	❑ **[Cold stator resist.]** ☐ [No] (nO): function inactive. For applications which do not require high performance or do not tolerate automatic auto-tuning (passing a current through the motor) each time the drive is powered up. ☐ [Init] (InIt): activates the function. To improve low-speed performance whatever the thermal state of the motor. ☐ Value of cold state stator resistance used, in mΩ. **Note:** • **It is strongly recommended that this function is activated for mechanical handling applications.** • The function should only be activated [Init] (InIt) when the motor is cold. • When [Cold stator resist.] (rSC) = [Init] (InIt), the [Auto-tuning] (tUn) parameter is forced to [Power on] (POn). At the next run command the stator resistance is measured with an auto-tune. The [Cold stator resist.] (rSC) then changes to a value of (8888) and maintains it, [Auto-tuning] (tUn) is still forced to [Power on] (POn). The [Cold stator resist.] (rSC) parameter remains at [Init] (InIt) as long as the measurement has not been performed. • Value 8888 can be forced or changed using the jog dial (1).		[No] (nO)

(1) Procedure:
- Check that the motor is cold.
- Disconnect the cables from the motor terminals.
- Measure the resistance between 2 of the motor terminals (U. V. W.) without modifying its connection.
- Use the jog dial to enter half the measured value.
- Increase the factory setting of [IR compensation] (UFr), page 33, to 100% rather than 20%.

Note: Do not use [Cold stator resist.] (rSC) if it is not set to [No] (nO) or = [Power on] (POn) with catch on the fly ([CATCH ON THE FLY] (FLr-), page 93).

Code	Description	Adjustment range	Factory setting
tUn	❑ **[Auto tuning]**		[No] (nO)

⚠ ⚠ DANGER

HAZARD OF ELECTRIC SHOCK, EXPLOSION, OR ARC FLASH

- During auto-tuning the motor operates at nominal current.
- Do not work on the motor during auto-tuning.

Failure to follow these instructions will result in death or serious injury.

⚠ WARNING

LOSS OF CONTROL

- It is essential that the **[Rated motor volt.] (UnS)**, **[Rated motor freq.] (FrS)**, **[Rated motor freq.] (nCr)**, **[Rated motor speed] (nSP)** , **[Motor 1 Cosinus Phi.] (COS)** parameters are configured correctly before starting auto-tuning.
- When one or more parameters have been changed after auto-tuning has been performed, **[Auto-tuning] (tUn)** will return **[No] (nO)** and the procedure will have to be repeated.

Failure to follow these instructions can result in death, serious injury, or equipment damage.

nO [No] (nO): Auto-tuning not performed

YES [Yes] (YES): Auto-tuning is performed as soon as possible, then the parameter automatically changes to [Done] (dOnE) or [No] (nO) in the event that Auto-tuning is not successful [AUTO TUNING FAULT] (tnF) is displayed if [Autotune fault mgt] (tnL) = [Yes] (YES), page 95).

donE [Done] (dOnE): Use of the values given the last time auto-tuning was performed

run [Drv running] (rUn): Auto-tuning is performed every time a run command is sent.

Pon [Power on] (POn): Auto-tuning is performed on every power-up.

LI1 to LI6 [LI1] to [LI16] (LI1) to (LI6): Auto-tuning is performed on the transition from 0 → 1 of a logic input assigned to this function.

⚠ ⚠ DANGER

HAZARD OF ELECTRIC SHOCK OR ARC FLASH

When **[Auto tuning] (tUn)** is set **[Power on] (POn)**, Auto tune will be performed every time the power will be switched on.

- Check this action will not endanger personnel or equipment in any way.

Failure to follow these instructions will result in death or serious injury.

Note:
[Auto-tuning] (tUn) is forced to [Power on] (POn) if [Cold stator resist.] (rSC) = [Init] (InIt).
Auto-tuning is only performed if no command has been activated. If a "freewheel stop" or "fast stop" function is assigned to a logic input, this input must be set to 1 (active at 0).
Auto-tuning may take 1 to 2 seconds. Do not interrupt the process. Wait for the display to change to [Done] (dOnE) or [No] (nO).

tUS	❑ **[Auto tuning state]**		[Not done] (tAb)

(For information only, cannot be modified)

tAb [Not done] (tAb): The default stator resistance value is used to control the motor.

PEnd [Pending] (PEnd): Auto-tuning has been requested but not yet performed.

PrOG [In Progress] (PrOG): Auto-tuning in progress.

FAIL [Failed] (FAIL): Auto-tuning was unsuccessful.

donE [Done] (dOnE): The stator resistance measured by the auto-tuning function is used to control the motor.

Strd [Entered R1] (Strd): The cold state stator resistance ([Cold stator resist.] (rSC) which is not set to [No] (nO)) is used to control the motor.

CUS [Customized] (CUS): The value of [Cold stator resist.] (rSC) is set manually.

Code	Description	Adjustment range	Factory setting
uFt	❑ **[U/F mot 1 selected]**		[SVC] (n)
L P n nLd	☐ [Cst. torque] (L): Constant torque for motors connected in parallel or special motors. ☐ [Var. torque] (P): Variable torque for pump and fan applications. ☐ [SVC] (n): Sensorless flux vector control for constant torque applications. ☐ [Energy sav.] (nLd): Energy saving, for variable torque applications not requiring high dynamics (behaves in a similar way to the [Var. torque] (P) ratio with no load and the [SVC] (n) ratio on load). Voltage 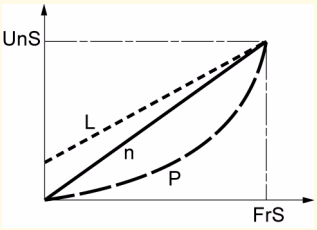 		
nrd	❑ **[Noise reduction]**		[Yes] (YES)
YES no	☐ [Yes] (YES): Frequency with random modulation. ☐ [No] (nO): Fixed frequency. Random frequency modulation helps to prevent any resonance which may occur at a fixed frequency.		
SFr	❑ **[Switching freq.]** (1)	2.0 to 16 kHz	4 kHz
	The frequency can be adjusted to reduce the noise generated by the motor. If the frequency has been set to a value higher than 4 kHz, in the event of excessive temperature rise, the drive will automatically reduce the switching frequency and increase it again once the temperature has returned to normal.		
tFr	❑ **[Max frequency]**	10 to 500 Hz	60 Hz
	The factory setting is 60 Hz, or preset to 72 Hz if [Standard mot. freq] (bFr) is set to 60 Hz.		
SrF	❑ **[Speed loop filter]**		[No] (nO):
no YES	☐ [No] (nO): The speed loop filter is active (helps to prevent the reference being exceeded). ☐ [Yes] (YES): The speed loop filter is suppressed (in position control applications, this reduces the response time and the reference may be exceeded). 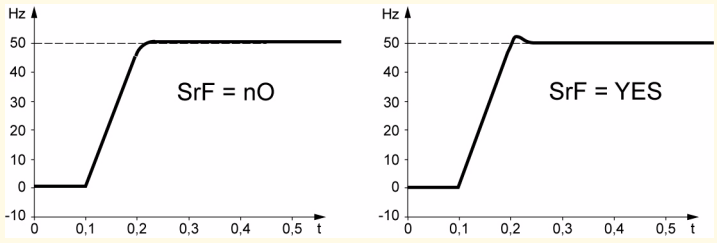 		

(1) Parameter can also be accessed in the [SETTINGS] (SEt-) menu.

Code	Description	Adjustment range	Factory setting
SCS no Str1 2 s	❑ **[Saving config.]** ☐ [No] (nO): Function inactive ☐ [Config 1] (Str1): Saves the current configuration (but not the result of auto-tuning) to EEPROM. [Saving config.] (SCS) automatically switches to [No] (nO) as soon as the save has been performed. This function is used to keep another configuration in reserve, in addition to the current configuration. When drives leave the factory the current configuration and the backup configuration are both initialized with the factory configuration. • If the ATV31 remote display terminal option is connected to the drive, the following additional selection options will appear: [File 1] (FIL1), [File 2] (FIL2), [File 3] (FIL3), [File 4] (FIL4) (files available in the remote display terminal's EEPROM memory for saving the current configuration). They can be used to store between 1 and 4 different configurations which can also be stored on or even transferred to other drives of the same rating. [Saving config.] (SCS) automatically switches to [No] (nO) as soon as the save has been performed.	(1)	[No] (nO)
CFG 2 s	❑ **[Macro configuration]** **⚠ DANGER** **UNINTENDED EQUIPMENT OPERATION** Check that the selected macro configuration is compatible with the wiring diagram used. **Failure to follow these instructions will result in death or serious injury.** Choice of source configuration. ☐ [Start/Stop] (StS): Start/stop configuration Identical to the factory configuration apart from the I/O assignments: • Logic inputs: - LI1, LI2 (reversing): 2-wire transition detection control, LI1 = run forward, LI2 = run reverse - LI3 to LI6: Inactive (not assigned) • Analog inputs: - AI1: Speed reference 0-10 V - AI2, AI3: Inactive (not assigned) • Relay R1: The contact opens in the event of a detected fault (or drive off). • Relay R2: Inactive (not assigned) • Analog output AOC: 0-20 mA, inactive (not assigned) ☐ [Factory set.] (Std): Factory configuration (see page 11). **Note:** The assignment of [Macro configuration] (CFG) results directly in a return to the selected configuration.	(1)	[Factory set.] (Std)
StS Std			

(1) [Saving config.] (SCS), [Macro configuration] (CFG), and [Restore config.] (FCS) can be accessed from several configuration menus, but they apply to all menus and parameters.
(2) Parameter can also be accessed in the [SETTINGS] (SEt-) menu.

2 s The jog dial (ENT) needs to be pressed and held down (for 2 s) to change the assignment for this parameter.

Code	Description	Adjustment range	Factory setting
FCS	❑ [Restore config.]	(1)	[No] (nO)

2 s

⚠ DANGER

UNINTENDED EQUIPMENT OPERATION

Check that the changes made to the current configuration are compatible with the wiring diagram used.

Failure to follow these instructions will result in death or serious injury.

- nO ☐ [No] (nO): Function inactive.
- rEC1 ☐ [Internal 1] (rEC1): The current configuration becomes identical to the backup configuration previously saved by [Saving config.] (SCS) = [Config 1] (Str1).
  [Internal 1] (rEC1) is only visible if the backup has been carried out. [Restore config.] (FCS) automatically switches to [No] (nO) as soon as this action has been performed.
- InI ☐ [Factory Set.] (InI): The current configuration is replaced by the configuration selected by the [Macro configuration] (CFG) parameter (2). [Restore config.] (FCS) automatically switches to [No] (nO) as soon as this action has been performed.
  If the ATV31 remote display terminal option is connected to the drive (3), the following additional selection options appear, as long as the corresponding files in the remote display terminal's EEPROM memory have been loaded (0 to 4 files): [File 1] (FIL1), [File 2] (FIL2), [File 3] (FIL3), [File 4] (FIL4). They enable the current configuration to be replaced with one of the 4 configurations that may be loaded on the remote display terminal.
  [Restore config.] (FCS) automatically switches to [No] (nO) as soon as this action has been performed.
  Note: If nAd appears on the display briefly before the parameter switches to [No] (nO), this means that the configuration transfer is not possible and has not been performed (different drive ratings, for example). If ntr appears on the display briefly before the parameter switches to [No] (nO), this means that an invalid configuration transfer has occurred and that the factory settings will need to be restored using [Factory Set.] (InI).
  In both cases, check the configuration to be transferred before trying again.

(1) [Saving config.] (SCS), [Macro configuration] (CFG), and [Restore config.] (FCS) can be accessed from several configuration menus, but they apply to all menus and parameters.

(2) The following parameters are not modified by this function; they retain their configuration:
- [Standard mot. freq] (bFr), page 41
- [HMI command] (LCC), page 61
- [PIN code 1] (COd), (terminal access code), page 103
- The parameters in the [COMMUNICATION] (COM-) menu
- The parameters in the [MONITORING] (SUP-) menu

(3) Options [File 1] (FIL1) to [File 4] (FIL4) continue to be displayed on the drive, even after the ATV31 remote terminal has been disconnected.

2 s The jog dial (ENT) needs to be pressed and held down (for 2 s) to change the assignment for this parameter.

[INPUTS / OUTPUTS CFG] (I-O-) menu

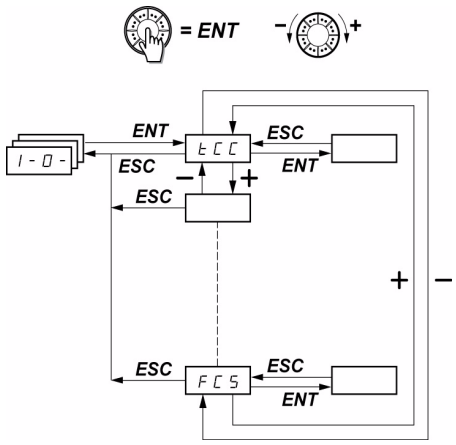

2-wire/3-wire control

Return to factory settings/Restore configuration

The parameters can only be modified when the drive is stopped and no run command is present.
On the optional ATV31 remote display terminal, this menu can be accessed with the switch in the position.

Code	Description	Adjustment range	Factory setting
tCC 2 s	❑ **[2/3 wire control]** See page 30.		[2 wire] (2C)
tCt	❑ **[2 wire type]** **⚠ DANGER** **UNINTENDED EQUIPMENT OPERATION** Check that the changes made to 2-wire control are compatible with the wiring diagram used. **Failure to follow these instructions will result in death or serious injury.** Parameter can be accessed if [2/3 wire control] (tCC) = [2 wire] (2C), page 47. LEL ☐ [Level] (LEL): State 0 or 1 is taken into account for run or stop. trn ☐ [Transition] (trn): A change of state (transition or edge) is necessary to initiate operation, in order to help prevent accidental restarts after a break in the power supply. PFo ☐ [Fwd priority] (PFO): State 0 or 1 is taken into account for run or stop, but the "forward" input takes priority over the "reverse" input.		[Transition] (trn)

2 s The jog dial (ENT) needs to be pressed and held down (for 2 s) to change the assignment for this parameter.

[INPUTS / OUTPUTS CFG] (I-O-) menu

rEF-
SEt-
drC-
I-O-
CtL-
Fun-
FLt-
CoM-
SuP-

Code	Description	Adjustment range	Factory setting
rrS	❑ **[Reverse assign.]**		[LI2] (LI2)
	If [Reverse assign.] (rrS) = [No] (nO), run reverse remains active by means of negative voltage on AI2, for example.		
nO	☐ [No] (nO): Not assigned		
LI1	☐ [LI1] (LI1): Logic input LI1		
LI2	☐ [LI2] (LI2): Logic input LI2 can be accessed if [2/3 wire control] (tCC) = [2 wire] (2C), page 47.		
LI3	☐ [LI3] (LI3): Logic input LI3		
LI4	☐ [LI4] (LI4): Logic input LI4		
LI5	☐ [LI5] (LI5): Logic input LI5		
LI6	☐ [LI6] (LI6): Logic input LI6		
CrL3	❑ **[AI3 min. value]**	0 to 20 mA	4 mA
CrH3	❑ **[AI3 max. value]**	4 to 20 mA	20 mA
	These two parameters are used to configure the input for 0-20 mA, 4-20 mA, 20-4 mA, etc.		
	Frequency 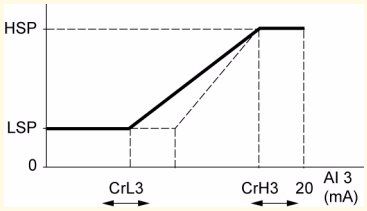	Example: 20 - 4 mA Frequency 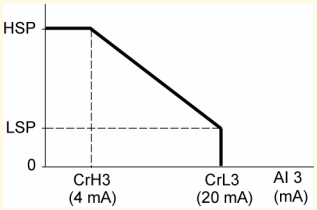	
AO1t	❑ **[AO1 Type]**		[Current](0A)
	This parameter is not visible when a communication card is connected to the product.		
0A	☐ [Current] (0A): 0 - 20 mA configuration (use terminal AOC)		
4A	☐ [Cur. 4-20] (4A): 4 - 20 mA configuration (use terminal AOC)		
10U	☐ [Voltage] (10U): 0 - 10 V configuration (use terminal AOV)		
do	❑ **[Analog./logic output]**		[No] (nO)
	This parameter is not visible when a communication card is connected to the product.		
nO	☐ [No] (nO): Not assigned		
oCr	☐ [I motor] (OCr): Motor current. 20 mA or 10 V corresponds to twice the nominal drive current.		
oFr	☐ [Motor freq.] (OFr): Motor frequency. 20 mA or 10 V corresponds to the maximum frequency [Max frequency] (tFr), page 44.		
otr	☐ [Motor torq.] (Otr): Motor torque. 20 mA or 10 V corresponds to twice the nominal motor torque.		
oPr	☐ [P. supplied] (OPr): Power supplied by the drive. 20 mA or 10 V corresponds to twice the nominal drive power.		
	Making the following assignments (1) will transform the analog output to a logic output (see diagram in the Installation Manual):		
FLt	☐ [Drive fault] (FLt): Fault detected		
run	☐ [Drv running] (rUn): Drive running		
FtA	☐ [Freq. limit] (FtA): Frequency threshold reached ([Freq. threshold] (Ftd) parameter in the [SETTINGS] (SEt-) menu, page 39)		
FLA	☐ [HSP limit] (FLA): [High speed] (HSP) reached		
CtA	☐ [I attained] (CtA): Current threshold reached ([Current threshold] (Ctd) parameter in the [SETTINGS] (SEt-) menu, page 39)		
SrA	☐ [Freq. ref.] (SrA): Frequency reference reached		
tSA	☐ [Drv thermal] (tSA): Motor thermal threshold reached ([Motor therm. level] (ttd) parameter in the [SETTINGS] (SEt-) menu, page 39)		
bLC	☐ [Brake seq] (bLC): Brake sequence (for information, as this assignment can only be activated or deactivated from the [APPLICATION FUNCT.] (FUn-) menu, page 84)		
APL	☐ [No 4-20mA] (APL): Loss of 4-20 mA signal, even if [4-20mA loss] (LFL) = [No] (nO), page 95		
	The logic output is in state 1 (24 V) when the selected assignment is active, with the exception of [Drive fault] (FLt) (state 1 if the drive operation is normal).		
	Note: (1) With these assignments, **configure** [AO1 Type] (AO1t) **=** [Current] (OA)**.**		

[INPUTS / OUTPUTS CFG] (I-O-) menu

Code	Description	Adjustment range	Factory setting
r1	❑ **[R1 Assignment]** This parameter is not visible when a communication card is connected to the product. ☐ [No] (nO): Not assigned ☐ [No drive flt] (FLt): No drive detected fault ☐ [Drv running] (rUn): Drive running ☐ [Freq.Th.att.] (FtA): Frequency threshold reached ([Freq. threshold] (Ftd) parameter in the [SETTINGS] (SEt-) menu, page 39) ☐ [HSP attain.] (FLA): [High speed] (HSP) reached ☐ [I attained] (CtA): Current threshold reached ([Current threshold] (Ctd) parameter in the [SETTINGS] (SEt-) menu, page 39) ☐ [Freq.ref.att] (SrA): Frequency reference reached ☐ [Th.mot. att.] (tSA): Motor thermal threshold reached ([Motor therm. level] (ttd) parameter in the [SETTINGS] (SEt-) menu, page 39) ☐ [4-20mA] (APL): Loss of 4-20 mA signal, even if [4-20mA loss] (LFL) = [No] (nO), page 95 ☐ [LI1] to [LI6] (LI1) to (LI6): Returns the value of the selected logic input The relay is energized when the selected assignment is active, with the exception of [No drive flt] (FLt) (energized if the drive has not detected a fault).		[No drive flt] (FLt)
r2	❑ **[R2 Assignment]** ☐ [No] (nO): Not assigned ☐ [No drive flt] (FLt): No drive detected fault ☐ [Drv running] (rUn): Drive running ☐ [Freq.Th.att.] (FtA): Frequency threshold reached ([Freq. threshold] (Ftd) parameter in the [SETTINGS] (SEt-) menu, page 39) ☐ [HSP attain.] (FLA): [High speed] (HSP) reached ☐ [I attained] (CtA): Current threshold reached ([Current threshold] (Ctd) parameter in the [SETTINGS] (SEt-) menu, page 39) ☐ [Freq.ref.att] (SrA): Frequency reference reached ☐ [Th.mot. att.] (tSA): Motor thermal threshold reached ([Motor therm. level] (ttd) parameter in the [SETTINGS] (SEt-) menu, page 39) ☐ [Brk control] (bLC): Brake sequence (for information, as this assignment can only be activated or deactivated from the [APPLICATION FUNCT.] (FUn-) - menu, page 84) ☐ [4-20mA] (APL): Loss of 4-20 mA signal, even if [4-20mA loss] (LFL) = [No] (nO), page 95 ☐ [LI1] to [LI6] (LI1)to (LI6): Returns the value of the selected logic input The relay is energized when the selected assignment is active, with the exception of [No drive flt] (FLt) (energized if the drive has not detected a fault).		[No] (nO)
SCS 2 s	❑ **[Saving config.]** (1) See page 45.		nO
CFG 2 s	❑ **[Macro configuration]** (1) See page 45.		Std
FCS 2 s	❑ **[Restore config.]** (1) See page 46.		nO

(1) [Saving config.] (SCS), [Macro configuration] (CFG), and [Restore config.] (FCS) can be accessed from several configuration menus, but they apply to all menus and parameters.

2 s The jog dial (ENT) needs to be pressed and held down (for 2 s) to change the assignment for this parameter.

[COMMAND] (CtL-) menu

rEF-
SEt-
drC-
I-O-
CtL-
Fun-
FLt-
CoM-
SuP-

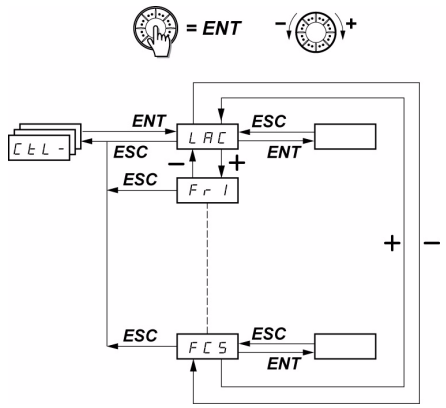

Function access level

Return to factory settings/Restore configuration

The parameters can only be modified when the drive is stopped and no run command is present.
On the optional remote display terminal, this menu can be accessed with the switch in the position.

Control and reference channels

Run commands (forward, reverse, etc.) and references can be sent using the following channels:

Command CMD	Reference rFr
tEr: Terminals (LI.)	AIx: Terminals
LCC: Remote display terminal (RJ45 socket)	LCC: ATV312 keypad or remote display terminal
LOC: Control via the keypad	AIV1: Jog dial
Mdb: Modbus (RJ45 socket)	Mdb: Modbus (RJ45 socket)
nEt: Network	nEt: Network

The [ACCESS LEVEL] (LAC) parameter in the [COMMAND] (CtL-) menu, page 58, can be used to select priority modes for the control and reference channels. It has 3 function levels:

- [ACCESS LEVEL] (LAC) [Level 1] (L1): = Basic functions. The channels are managed in order of priority.
- [ACCESS LEVEL] (LAC) [Level 2] (L2): = Provides the option of additional functions compared with [Level 1] (L1):
  - +/- speed (motorized jog dial)
  - Brake control
  - 2nd current limit switching
  - Motor switching
  - Management of limit switches
- [ACCESS LEVEL] (LAC) [Level 3] (L3): = Same functions as with [Level 2] (L2). Management of the control and reference channels is configurable.

[COMMAND] (CtL-) menu

These channels can be combined in order of priority if [ACCESS LEVEL] (LAC) = [Level 1] (L1) or [Level 2] (L2).

Highest priority to lowest priority: Forced local mode, Network, Modbus, Remote display terminal, Terminals/Keypad (from right to left in the diagram below)

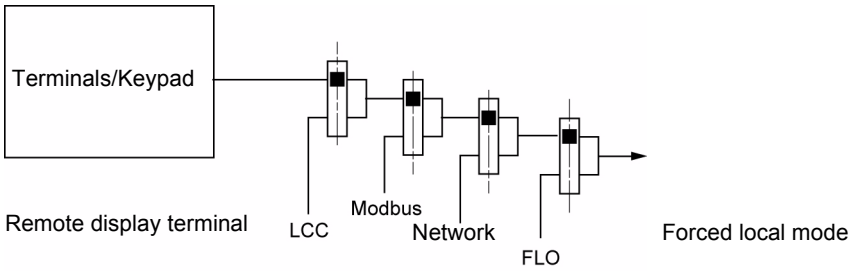

See the detailed block diagrams on pages 53 and 54.

- On ATV312 drives, in factory settings mode, control and reference are managed by the terminals.
- With a remote terminal display, if [HMI command] (LCC) = [Yes] (YES) ([COMMAND] (CtL-) menu), control and reference are managed by the remote terminal display (reference via [HMI Frequency ref.] (LFr) in the [SETTINGS] (SEt-) menu).

The channels can be combined by configuration if [ACCESS LEVEL] (LAC) = [Level 3] (L3).

Combined control and reference ([Profile] (CHCF) parameter = [Not separ.] (SIM)):

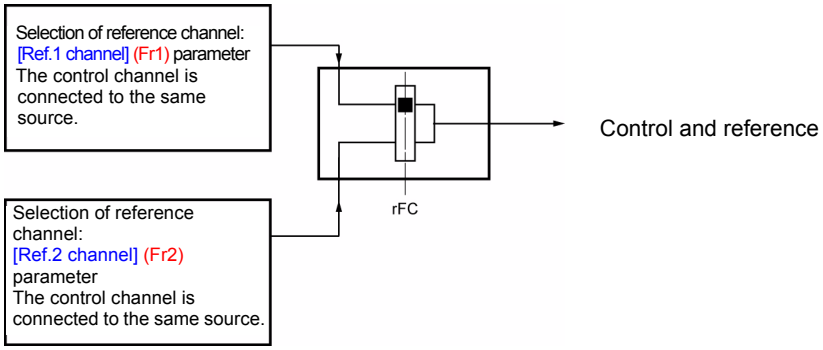

The [Ref. 2 switching] (rFC) parameter can be used to select the [Ref.1 channel] (Fr1) or [Ref.2 channel] (Fr2) channel, or to configure a logic input or a control word bit for remote switching of either one.
See the detailed block diagrams on pages 55 and 57.

Separate control and reference ([Profile] (CHCF) parameter = [Separate] (SEP)):

Reference

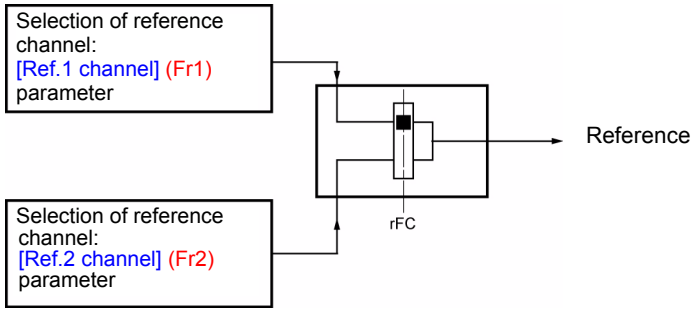

The [Ref. 2 switching] (rFC) parameter can be used to select the [Ref.1 channel] (Fr1) or [Ref.2 channel] (Fr2) channel, or to configure a logic input or a control word bit for remote switching of either one.

Control

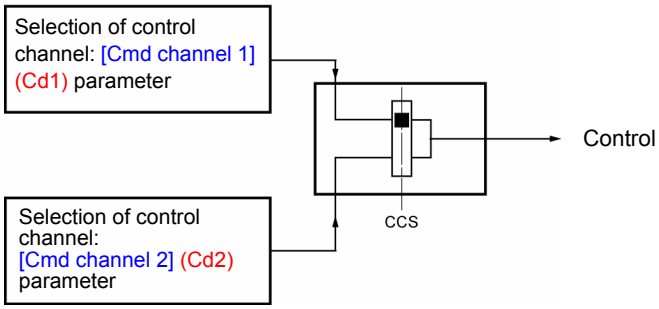

The [Cmd switching] (CCS) parameter, page 60, can be used to select the [Cmd channel 1] (Cd1) or [Cmd channel 2] (Cd2) channel, or to configure a logic input or a control bit for remote switching of either one.

See the detailed block diagrams on pages 55 and 56.

Reference channel for [ACCESS LEVEL] (LAC) = [Level 1] (L1) or [Level 2] (L2)

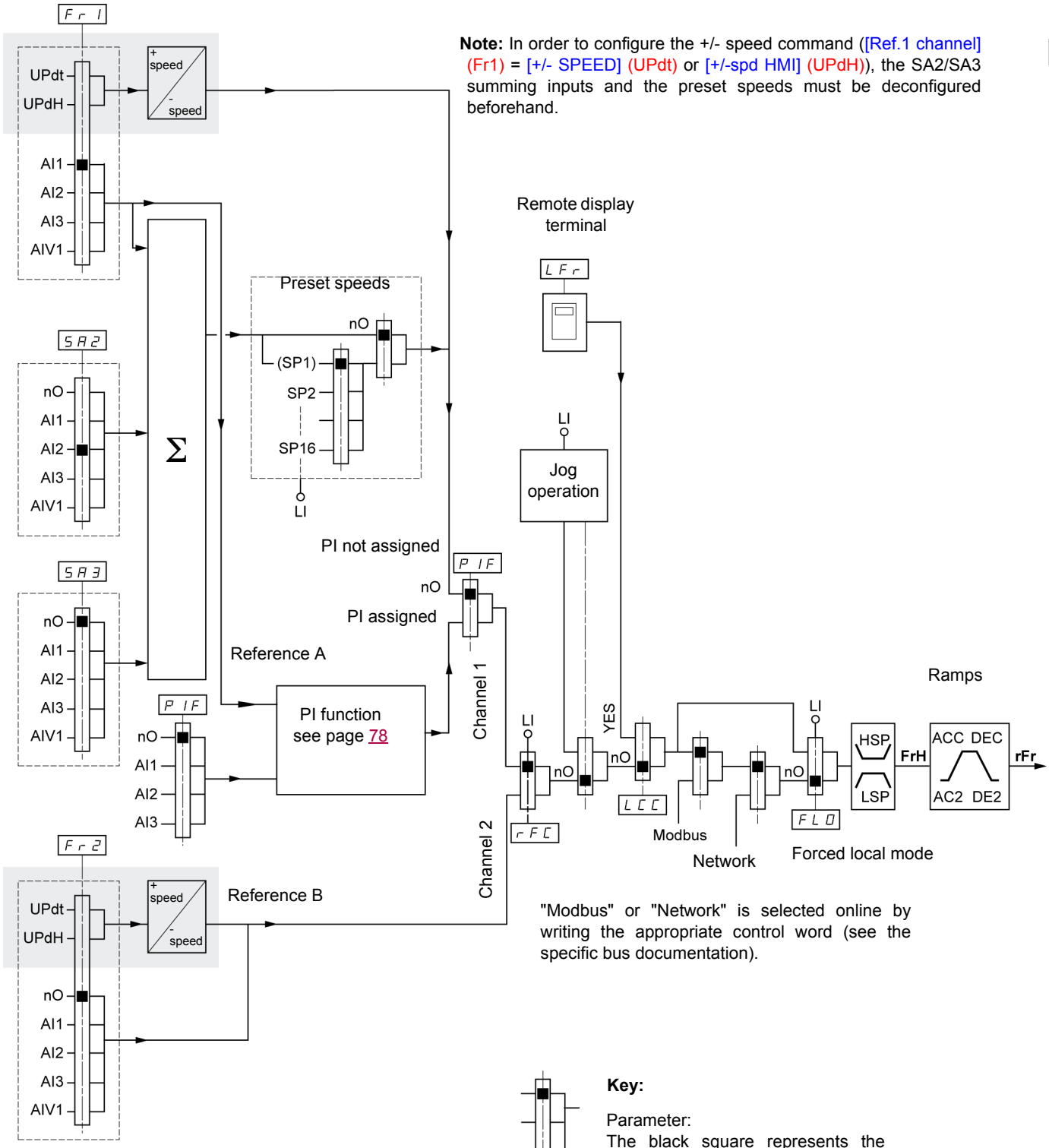

Note: In order to configure the +/- speed command ([Ref.1 channel] (Fr1) = [+/- SPEED] (UPdt) or [+/-spd HMI] (UPdH)), the SA2/SA3 summing inputs and the preset speeds must be deconfigured beforehand.

"Modbus" or "Network" is selected online by writing the appropriate control word (see the specific bus documentation).

Key:

Parameter:
The black square represents the factory setting assignment.

Function can be accessed for [ACCESS LEVEL] (LAC) = [Level 2] (L2)

rEF-
SEt-
drC-
I-O-
CtL-
Fun-
FLt-
CoM-
SuP-

Control channel for [ACCESS LEVEL] (LAC) = [Level 1] (L1) or [Level 2] (L2)

The [Forced local assign.] (FLO) parameter, page 99, the [HMI command] (LCC) parameter, page 61, and the selection of the Modbus bus or network are common to the reference and control channels.
Example: If [HMI command] (LCC) = [Yes] (YES), the command **and** reference are given by the remote display terminal.

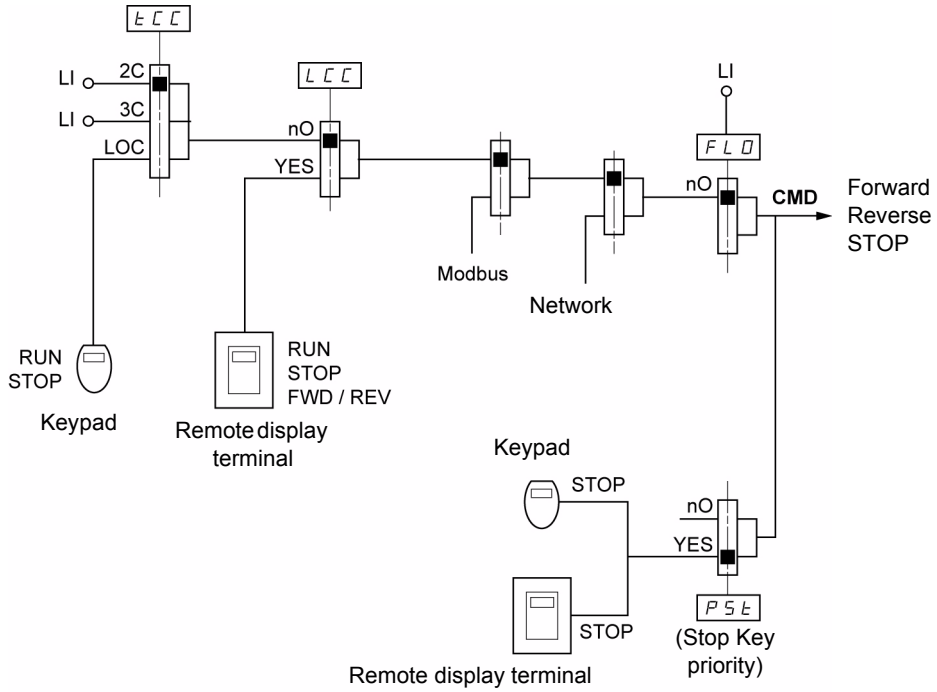

Key:

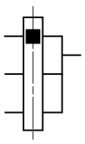

Parameter:
The black square represents the factory setting assignment

Reference channel for [ACCESS LEVEL] (LAC) = [Level 3] (L3)

Note: In order to configure the +/- speed command ([Ref.1 channel] (Fr1) = [+/- SPEED] (UPdt) or [+/-spd HMI] (UPdH)), the SA2/SA3 summing inputs and the preset speeds must be deconfigured beforehand.

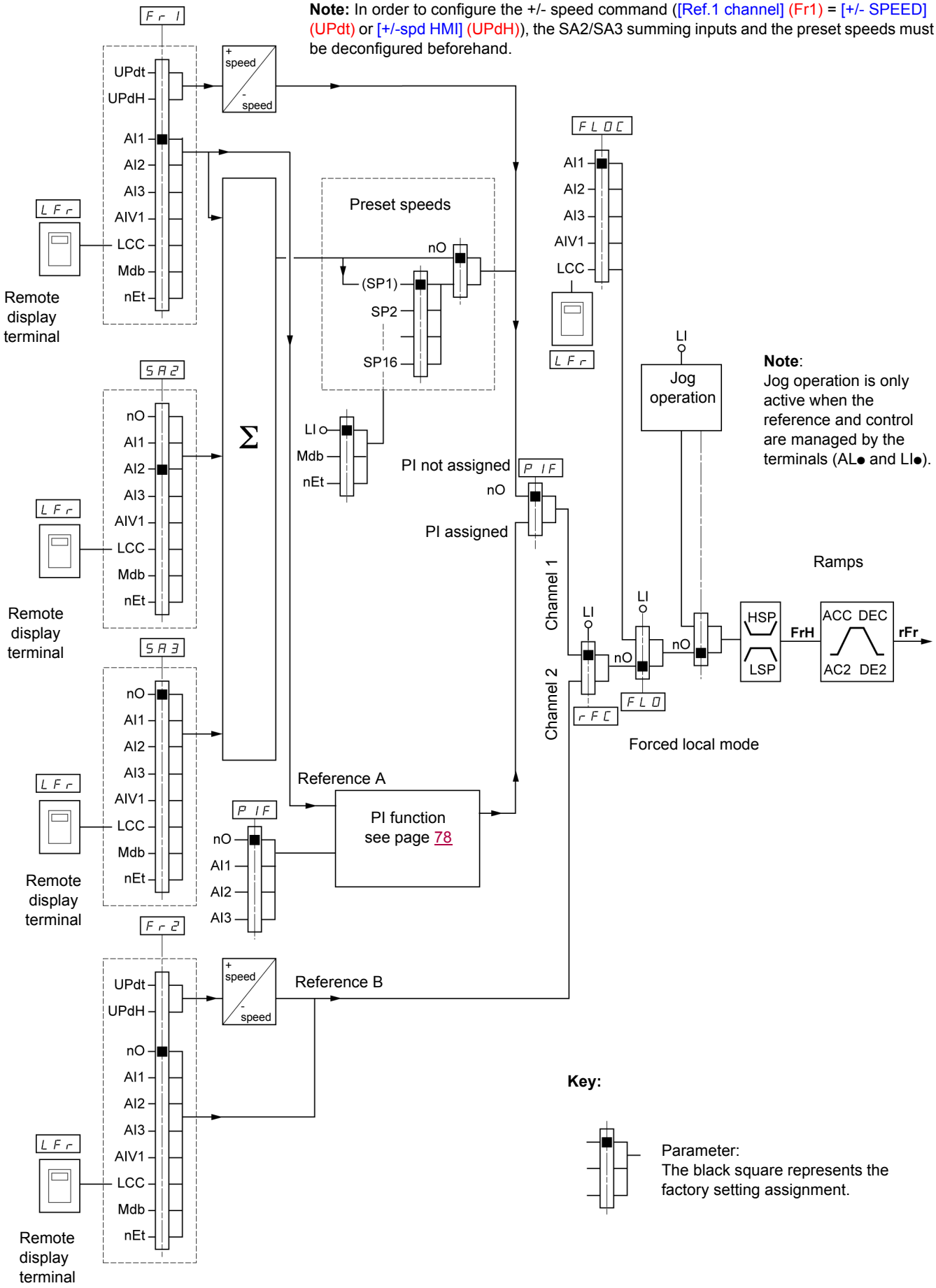

Control channel for [ACCESS LEVEL] (LAC) = [Level 3] (L3)

Combined reference and control

The [Ref.1 channel] (Fr1) parameter, page 58, the [Ref.2 channel] (Fr2) parameter, page 58, the [Ref. 2 switching] (rFC) parameter, page 59, the [Forced local assign.] (FLO) parameter, page 99, and the [Forced local Ref.] (FLOC) parameter, page 99, are common to reference and control. The control channel is therefore determined by the reference channel.

Example: If the [Ref.1 channel] (Fr1) reference = [AI1] (AI1) (analog input at the terminals), control is via LI (logic input at the terminals).

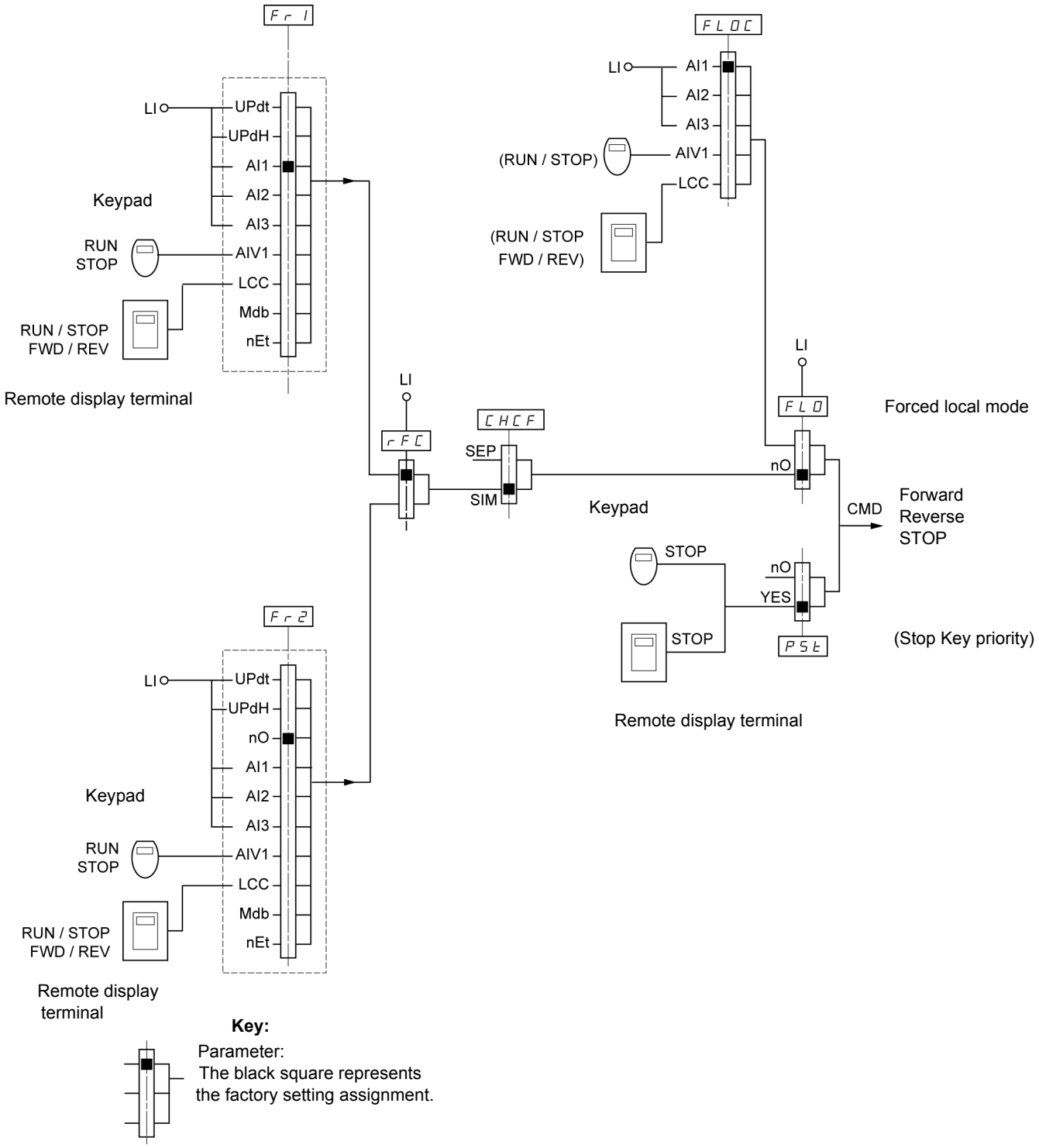

Control channel for [ACCESS LEVEL] (LAC) = [Level 3] (L3)

Mixed mode (separate reference and control)

The [Forced local assign.] (FLO) parameter, page 99, and the [Forced local Ref.] (FLOC) parameter, page 99, are common to reference and control.
Example: If the reference is in forced local mode via [AI1] (AI1) (analog input at the terminals), control in forced local mode is via LI (logic input at the terminals).

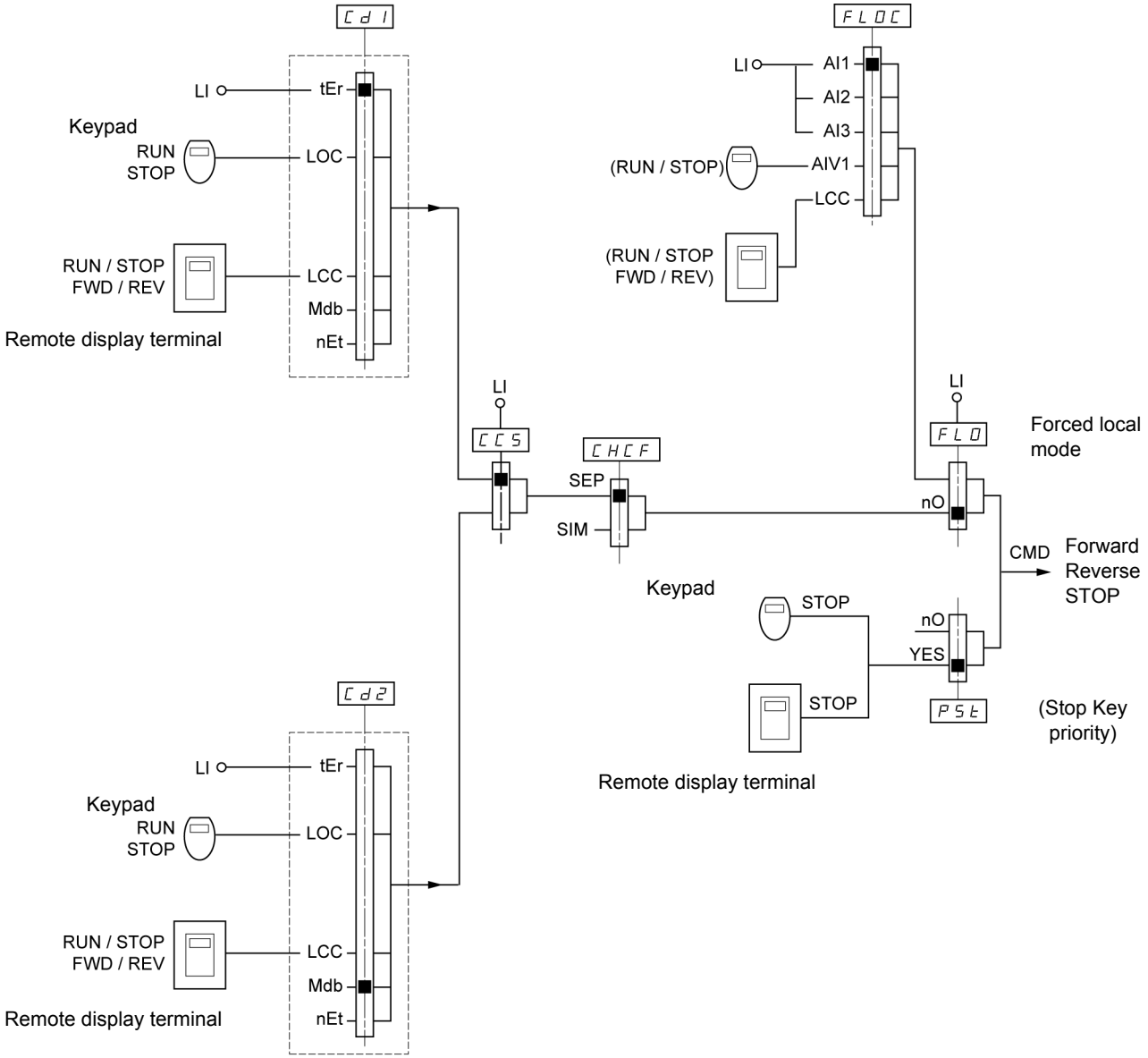

Key:

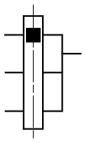

Parameter:
The black square represents
the factory setting assignment.

[COMMAND] (CtL-) menu

rEF-
SEt-
drC-
I-O-
CtL-
Fun-
FLt-
CoM-
SuP-

Note: There may be an incompatibility between functions (see the incompatibility table, page 21). In this case, the first function configured will prevent the remainder being configured.

Code	Description	Adjustment range	Factory setting
LAC	❑ **[ACCESS LEVEL]**		[Level 1] (L1)

⚠ DANGER

UNINTENDED EQUIPMENT OPERATION

- Assigning **[ACCESS LEVEL] (LAC)** to **[Level 3] (L3)** will restore the factory settings of the **[Ref.1 channel] (Fr1)** parameter, page 58, the **[Cmd channel 1] (Cd1)** parameter, page 59, the **[Profile] (CHCF)** parameter, page 59, and the **[2/3 wire control] (tCC)** parameter, page 47.
- **[Level 3] (L3)** can only be restored to **[Level 2] (L2)** or **[Level 1] (L1)**, and **[Level 2] (L2)** can only be restored to **[Level 1] (L1)** by means of a "factory setting" via **[Restore config.] (FCS)**, page 46.
- Check that this change is compatible with the wiring diagram used.

Failure to follow these instructions will result in death or serious injury.

2 s

L1 ☐ [Level 1] (L1): Access to standard functions and channel management in order of priority.

L2 ☐ [Level 2] (L2):Access to advanced functions in the [APPLICATION FUNCT.] (FUn-) menu:
- - +/- speed (motorized jog dial)
- Brake control
- 2nd current limit switching
- Motor switching
- Management of limit switches

L3 ☐ [Level 3] (L3): Access to advanced functions and management of mixed control modes

Fr1	❑ **[Ref.1 channel]** See page 29.		[AI1] (AI1)
Fr2	❑ **[Ref.2 channel]**		[No] (nO)

nO ☐ [No] (nO): Not assigned
AI1 ☐ [AI1] (AI1): Analog input AI1
AI2 ☐ [AI2] (AI2): Analog input AI2
AI3 ☐ [AI3] (AI3): Analog input AI3
AIU1 ☐ [AI Virtual 1] (AIV1): Jog dial

If [ACCESS LEVEL] (LAC) = [Level 2] (L2) or [Level 3] (L3), the following additional assignments are possible:

UPdt ☐ [+/-Speed] (UPdt): (1) +/- speed reference via LI. See configuration page 77.
UPdH ☐ [+/-spd HMI] (UPdH): (1) +/- speed reference via the jog dial on the ATV312 keypad.
To use, display the frequency [Output frequency] (rFr), page 101. The +/- speed function via the keypad or the terminal is controlled from the [MONITORING] (SUP-) menu by selecting the [Output frequency] (rFr) parameter.
If [ACCESS LEVEL] (LAC) = [Level 3] (L3), the following additional assignments are possible:

LCC ☐ [HMI] (LCC): Reference via the remote display terminal, [HMI Frequency ref.] (LFr) parameter in the [SETTINGS] (SEt-) menu, page 32.
Mdb ☐ [Modbus] (Mdb): Reference via Modbus
nEt ☐ [Com. card] (nEt): Reference via network

(1) NOTE:

- It is not possible to simultaneously assign [+/- SPEED] (UPdt) to [Ref.1 channel] (Fr1) or [Ref.2 channel] (Fr2), and [+/-spd HMI] (UPdH) to [Ref.1 channel] (Fr1) or [Ref.2 channel] (Fr2). Only one of the [+/- SPEED] (UPdt)/[+/-spd HMI] (UPdH) assignments is permitted on each reference channel.
- The +/- speed function in [Ref.1 channel] (Fr1) is incompatible with several functions (see page 21). It can only be configured if these functions are unassigned, in particular the summing inputs (set [Summing ref. 2] (SA2) to [No] (nO), page 70) and the preset speeds (set [2 preset speeds] (PS2) and [4 preset speeds] (PS4) to [No] (nO), page 72) which will have been assigned as part of the factory settings.
- In [Ref.2 channel] (Fr2), the +/- speed function is compatible with the preset speeds, summing inputs, and the PI regulator.

2 s The jog dial (ENT) needs to be pressed and held down (for 2 s) to change the assignment for this parameter.

Code	Description	Adjustment range	Factory setting
rFC	**❑ [Ref. 2 switching]**		[ch1 active] (Fr1)
	The [Ref. 2 switching] (rFC) parameter can be used to select the [Ref.1 channel] (Fr1) or [Ref.2 channel] (Fr2) channel, or to configure a logic input or a control word bit for remote switching of [Ref.1 channel] (Fr1) or [Ref.2 channel] (Fr2). Fr1 ☐ [ch1 active] (Fr1): Reference = reference 1 Fr2 ☐ [ch1 active] (Fr2): Reference = reference 2 LI1 ☐ [LI1] (LI1): Logic input LI1 LI2 ☐ [LI2] (LI2): Logic input LI2 LI3 ☐ [LI3] (LI3): Logic input LI3 LI4 ☐ [LI4] (LI4): Logic input LI4 LI5 ☐ [LI5] (LI5): Logic input LI5 LI6 ☐ [LI6] (LI6): Logic input LI6 If [ACCESS LEVEL] (LAC) = [Level 3] (L3), the following additional assignments are possible: C111 ☐ [C111] (C111): Bit 11 of Modbus control word C112 ☐ [C112] (C112): Bit 12 of Modbus control word C113 ☐ [C113] (C113): Bit 13 of Modbus control word C114 ☐ [C114] (C114): Bit 14 of Modbus control word C115 ☐ [C115] (C115): Bit 15 of Modbus control word C211 ☐ [C211] (C211): Bit 11 of network control word C212 ☐ [C212] (C212): Bit 12 of network control word C213 ☐ [C213] (C213): Bit 13 of network control word C214 ☐ [C214] (C214): Bit 14 of network control word C215 ☐ [C215] (C215): Bit 15 of network control word The reference can be switched with the drive running. [Ref.1 channel] (Fr1) is active when the logic input or control word bit is at state 0. [Ref.2 channel] (Fr2) is active when the logic input or control word bit is at state 1.		
CHCF	**❑ [Profile]** (control channels separated from reference channels)		[Not separ.] (SIM)
	Parameter can be accessed if [ACCESS LEVEL] (LAC) = [Level 3] (L3), page 58. Sim ☐ [Not separ.] (SIM): Combined SEP ☐ [Separate] (SEP): Separate		
Cd1 ★	**❑ [Cmd channel 1]**		[Terminal] (tEr)
	Parameter can be accessed if [Profile] (CHCF) = [Separate] (SEP), page 59, and [ACCESS LEVEL] (LAC) = [Level 3] (L3), page 58. tEr ☐ [Terminal] (tEr): Control via terminals LoC ☐ [Local] (LOC): Control via keypad LCC ☐ [Remot. HMI] (LCC): Control via remote display terminal ndb ☐ [Modbus] (Mdb): Control via Modbus nEt ☐ [Com. card] (nEt): Control via the network		

★ These parameters only appear if the corresponding function has been selected in another menu. When the parameters can also be accessed and set from within the configuration menu for the corresponding function, their description is detailed in these menus, on the pages indicated, to aid programming.

[COMMAND] (CtL-) menu

rEF-
SEt-
drC-
I-O-
CtL-
Fun-
FLt-
CoM-
SuP-

Code	Description	Adjustment range	Factory setting
Cd2 ★ tEr LoC LCC ndb nEt	**❑ [Cmd channel 2]** Parameter can be accessed if [Profile] (CHCF) = [Separate] (SEP), page 59, and [ACCESS LEVEL] (LAC) = [Level 3] (L3), page 58. ☐ [Terminal] (tEr): Control via terminals ☐ [Local] (LOC): Control via keypad ☐ [Remot. HMI] (LCC): Control via remote display terminal ☐ [Modbus] (Mdb): Control via Modbus ☐ [Com. card (nEt): Control via the network		[Modbus] (Mdb)
CCS ★ Cd1 Cd2 LI1 LI2 LI3 LI4 LI5 LI6 C111 C112 C113 C114 C115 C211 C212 C213 C214 C215	**❑ [Cmd switching]** Parameter can be accessed if [Profile] (CHCF) = [Separate] (SEP), page 59, and [ACCESS LEVEL] (LAC) = [Level 3] (L3), page 58. The [Cmd switching] (CCS) parameter can be used to select the [Cmd channel 1] (Cd1) or [Cmd channel 2] (Cd2) channel, or to configure a logic input or a control word bit for remote switching of [Cmd channel 1] (Cd1) or [Cmd channel 2] (Cd2). ☐ [ch1 active] (Cd1): Control channel = channel 1 ☐ [ch2 active] (Cd2): Control channel = channel 2 ☐ [LI1] (LI1): Logic input LI1 ☐ [LI2] (LI2): Logic input LI2 ☐ [LI3] (LI3): Logic input LI3 ☐ [LI4] (LI4): Logic input LI4 ☐ [LI5] (LI5): Logic input LI5 ☐ [LI6] (LI6): Logic input LI6 ☐ [C111] (C111): Bit 11 of Modbus control word ☐ [C112] (C112): Bit 12 of Modbus control word ☐ [C113] (C113): Bit 13 of Modbus control word ☐ [C114] (C114): Bit 14 of Modbus control word ☐ [C115] (C115): Bit 15 of Modbus control word ☐ [C211] (C211): Bit 11 of network control word ☐ [C212] (C212): Bit 12 of network control word ☐ [C213] (C213): Bit 13 of network control word ☐ [C214] (C214): Bit 14 of network control word ☐ [C215] (C215): Bit 15 of network control word Channel 1 is active when the input or control word bit is at state 0, Channel 2 is active when the input or control word bit is at state 1.		[ch1 active] (Cd1)
CoP no SP Cd ALL	**❑ [Copy channel 1<>2]** (copy only in this direction) **⚠ DANGER** **UNINTENDED EQUIPMENT OPERATION** Copying the command and/or reference can change the direction of rotation. • Check that this is safe. **Failure to follow these instructions will result in death or serious injury.** Parameter can be accessed if [ACCESS LEVEL] (LAC) = [Level 3] (L3), page 58. ☐ [No] (nO): No copy ☐ [Reference] (SP): Copy reference ☐ [Command] (Cd): Copy control ☐ [Cmd + ref.] (ALL): Copy control and reference • If channel 2 is controlled via the terminals, channel 1 control is not copied. • If the channel 2 reference is set via AI1, AI2, AI3 or AIU1, the channel 1 reference is not copied. • The reference copied is [Frequency ref.] (FrH) (before ramp), unless the channel 2 reference is set via +/- speed. In this case, the reference copied is [Output frequency] (rFr) (after ramp). **Note:** Copying the control and/or reference can change the direction of rotation.		[No] (nO)

★ These parameters only appear if the corresponding function has been selected in another menu. When the parameters can also be accessed and set from within the configuration menu for the corresponding function, their description is detailed in these menus, on the pages indicated, to aid programming.

[COMMAND] (CtL-) menu

Code	Description	Adjustment range	Factory setting
LCC nO YES	❑ **[HMI command]** Parameter can only be accessed using a remote display terminal, and for [ACCESS LEVEL] (LAC) = [Level 1] (L1) or [Level 2] (L2), page 58. ☐ [No] (nO): Function inactive ☐ [Yes] (YES): Enables control of the drive using the STOP/RESET, RUN and FWD/REV buttons on the display terminal. Here, the speed reference is given by the [HMI Frequency ref.] (LFr) parameter in the [SETTINGS] (SEt-) menu. Only the freewheel stop, fast stop and DC injection stop commands remain active on the terminals. If the drive/terminal connection is cut or if the terminal has not been connected, the drive detects a fault and locks in [MODBUS FAULT] (SLF).		[No] (nO)
PSt 2 s nO YES	❑ **[Stop Key priority]** This parameter can be used to activate or deactivate the stop button on the drive and the remote terminals. The stop button will be deactivated if the active control channel is different from that on the integrated display terminal or remote terminals. **⚠ WARNING** **LOSS OF CONTROL** You are going to disable the stop button located on the drive and remote display Do not select "**nO**" unless exterior stopping methods exist. **Failure to follow these instructions can result in death, serious injury, or equipment damage.** ☐ [No] (nO): Function inactive ☐ [Yes] (YES): STOP key priority		[Yes] (YES)
rot dFr drS bot	❑ **[Rotating direction]** This parameter is only visible if [Ref.1 channel] (Fr1), page 29, or [Ref.2 channel] (Fr2), page 58, are assigned to LCC or AIU1. Direction of operation authorized for the RUN key on the keypad or the RUN key on the remote display terminal. ☐ [Forward] (dFr): Forward ☐ [Reverse] (drS): Reverse ☐ [Both] (bOt): Both directions are authorized.		[Forward] (dFr)
SCS 2 s	❑ **[Saving config.]** See page 45.	(1)	nO
CFG 2 s	❑ **[Macro configuration]** See page 45.	(1)	Std
FCS 2 s	❑ **[Restore config.]** See page 46.	(1)	nO

2 s The jog dial (ENT) needs to be pressed and held down (for 2 s) to change the assignment for this parameter.

(1) [Saving config.] (SCS), [Macro configuration] (CFG), and [Restore config.] (FCS) can be accessed from several configuration menus, but they apply to all menus and parameters.

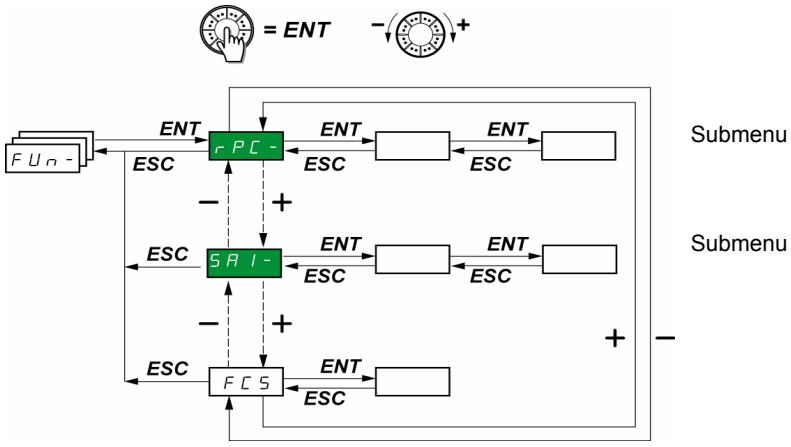

The parameters can only be modified when the drive is stopped and no run command is present.
On the optional remote display terminal, this menu can be accessed with the switch in the position.

Some functions have numerous parameters. In order to clarify programming and avoid having to scroll through endless parameters, these functions have been grouped in submenus.
Like menus, submenus are identified by a dash after their code: PSS- for example.

Note: There may be an incompatibility between functions (see the incompatibility table, page 21). In this case, the first function configured will prevent the remainder being configured.

Code	Name/Description	Adjustment range	Factory setting
rPC-	**[RAMPS]**		
rPt	**[Ramp type]**		[Linear] (LIn)

Defines the shape of the acceleration and deceleration ramps

- LIn: [Linear] (LIn): Linear
- S: [S ramp] (S): S ramp
- U: [U ramp] (U): U ramp
- CUS: [Customized] (CUS): Customized

S ramps

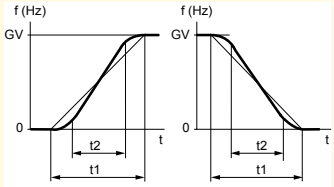

The rounding coefficient is fixed,
where t2 = 0.6 x t1
and t1 = set ramp time.

U ramps

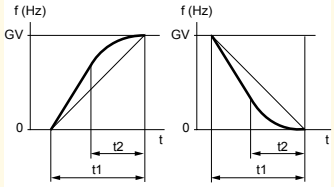

The rounding coefficient is fixed,
where t2 = 0.5 x t1
and t1 = set ramp time.

Customized ramps

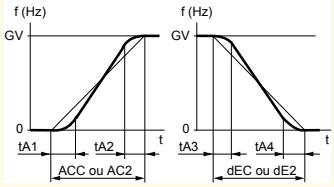

tA1: Adjustable from 0 to 100% (of ACC or AC2)
tA2: Adjustable from 0 to (100% - tA1) (of ACC or AC2)
tA3: Adjustable from 0 to 100% (of dEC or dE2)
tA4: Adjustable from 0 to (100% - tA3) (of dEC or dE2)

[APPLICATION FUNCT.] (FUn-) menu

Code	Name/Description	Adjustment range	Factory setting
rPC-	**[RAMPS]** (continued)		
tA1 ★	**[Begin Acc round]** Parameter can be accessed if the [Ramp type] (rPt) = [Customized] (CUS), page 62.	0 to 100	10
tA2 ★	**[End Acc round]** Parameter can be accessed if the [Ramp type] (rPt) = [Customized] (CUS), page 62.	0 to (100-tA1)	10
tA3 ★	**[Begin Dec round]** Parameter can be accessed if the [Ramp type] (rPt) = [Customized] (CUS), page 62.	0 to 100	10
tA4 ★	**[End Dec round]** Parameter can be accessed if the [Ramp type] (rPt) = [Customized] (CUS), page 62.	0 to (100-tA3)	10
inr 0.01 0.1 1	**[Ramp increment]** ☐ [0.01] (0.01): Ramp can be set between 0.05 s and 327.6 s. ☐ [0.1] (0.1): Ramp can be set between 0.1 s and 3,276 s. ☐ [1] (1): Ramp can be set between 1 s and 32,760 s (1). This parameter applies to the [Acceleration] (ACC), [Deceleration] (dEC), [Acceleration 2] (AC2), and [Deceleration 2] (dE2) parameters. **Note:** Changing the [Ramp increment] (Inr) parameter causes the settings for the [Acceleration] (ACC), [Deceleration] (dEC), [Acceleration 2] (AC2), and [Deceleration 2] (dE2) parameters to be modified as well.	0.01 - 0.1 - 1	0.1
ACC dEC	**[Acceleration]** (2) **[Deceleration]** Defined to accelerate/decelerate between 0 and the nominal frequency [Rated motor freq.] (FrS) (parameter in the [MOTOR CONTROL] (drC-) menu). Check that the value for [Deceleration] (dEC) is not too low in relation to the load to be stopped.	In accordance with inr, page 63	3 s 3 s

(1) When values higher than 9,999 are displayed on the drive or on the remote display terminal, a point is inserted after the thousands digit.
Note:
This type of display can lead to confusion between values which have two digits after a decimal point and values higher than 9,999. Check the value of the [Ramp increment] (Inr) parameter.
Example:
- If [Ramp increment] (Inr) = 0.01, the value 15.65 corresponds to a setting of 15.65 s.
- If [Ramp increment] (Inr) = 1, the value 15.65 corresponds to a setting of 15,650 s.

(2) Parameter can also be accessed in the [SETTINGS] (SEt-) menu.

★ These parameters only appear if the corresponding function has been selected in another menu. When the parameters can also be accessed and set from within the configuration menu for the corresponding function, their description is detailed in these menus, on the pages indicated, to aid programming.

Code	Name/Description	Adjustment range	Factory setting
rPC-	**[RAMPS]** (continued)		
rPS	**[Ramp switch ass.]**		[No] (nO)
	This function remains active regardless of the control channel. ☐ [No] (nO): Not assigned ☐ [LI1] (LI1): Logic input LI1 ☐ [LI2] (LI2): Logic input LI2 ☐ [LI3] (LI3): Logic input LI3 ☐ [LI4] (LI4): Logic input LI4 ☐ [LI5] (LI5): Logic input LI5 ☐ [LI6] (LI6): Logic input LI6 If [ACCESS LEVEL] (LAC) = [Level 3] (L3), the following assignments are possible: ☐ [CD11] (CD11): Bit 11 of the control word from a communication network ☐ [CD12] (CD12): Bit 12 of the control word from a communication network ☐ [CD13] (CD13): Bit 13 of the control word from a communication network ☐ [CD14] (CD14): Bit 14 of the control word from a communication network ☐ [CD15] (CD15): Bit 15 of the control word from a communication network [Acceleration] (ACC) and [Deceleration] (dEC) are enabled when the logic input or control word bit is at state 0. [Acceleration 2] (AC2) and [Deceleration 2] (dE2) are enabled when the logic input or control word bit is at state 1.		
Frt	**[Ramp 2 threshold]**	0 to 500 Hz	0 Hz
	The 2nd ramp is switched if [Ramp 2 threshold]] (Frt) is not 0 (the value 0 corresponds to the inactive function) and the output frequency is higher than [Ramp 2 threshold]] (Frt). Threshold ramp switching can be combined with switching via LI or bit as follows: 0 / <Frt / ACC, dEC 0 / >Frt / AC2, dE2 1 / <Frt / AC2, dE2 1 / >Frt / AC2, dE2		
AC2 ★	**[Acceleration 2]** (1)	In accordance with inr, page 63	5
	Parameter can be accessed if [Ramp 2 threshold] (Frt) > 0, page 64, or if [Ramp switch ass.] (rPS) is assigned, page 64.		
dE2 ★	**[Deceleration 2]** (1)	In accordance with inr, page 63	5
	Parameter can be accessed if [Ramp 2 threshold] (Frt) > 0, page 64, or if [Ramp switch ass.] (rPS) is assigned, page 64.		
brA	**[Dec ramp adapt.]**		[Yes] (YES)
	Activating this function automatically adapts the deceleration ramp, if this has been set at too low a value for the inertia of the load. ☐ [No] (nO): Function inactive ☐ [Yes] (YES): Function active. The function is incompatible with applications requiring: • Positioning on a ramp • The use of a braking resistor (the resistor would not operate correctly) [Dec ramp adapt.] (brA) is forced to [No] (nO) if brake control [Brake assignment] (bLC) is assigned, page 84.		

(1) Parameter can also be accessed in the [SETTINGS] (SEt-) menu.

★ These parameters only appear if the corresponding function has been selected in another menu. When the parameters can also be accessed and set from within the configuration menu for the corresponding function, their description is detailed in these menus, on the pages indicated, to aid programming.

Code	Name/Description	Adjustment range	Factory setting
StC-	**[STOP MODES]** (continued)		
Stt	**[Type of stop]**		[Ramp stop] (rMP)
	Stop mode on disappearance of the run command or appearance of a stop command. ☐ [Ramp stop] (rMP): On ramp ☐ [Fast stop] (FSt): Fast stop ☐ [Freewheel] (nST): Freewheel stop ☐ [DC injection] (dCI): DC injection stop		
FSt	**[Fast stop]**		[No] (nO)
	☐ [No] (nO): Not assigned ☐ [LI1] (LI1): Logic input LI1 ☐ [LI2] (LI2): Logic input LI2 ☐ [LI3] (LI3): Logic input LI3 ☐ [LI4] (LI4): Logic input LI4 ☐ [LI5] (LI5): Logic input LI5 ☐ [LI6] (LI6): Logic input LI6 If [ACCESS LEVEL] (LAC) = [Level 3] (L3), the following assignments are possible: ☐ [CD11] (CD11): Bit 11 of the control word from a communication network ☐ [CD12] (CD12): Bit 12 of the control word from a communication network ☐ [CD13] (CD13): Bit 13 of the control word from a communication network ☐ [CD14] (CD14): Bit 14 of the control word from a communication network ☐ [CD15] (CD15): Bit 15 of the control word from a communication network The stop is activated when the logic state of the input changes to 0 and the control word bit changes to 1. The fast stop is a stop on a reduced ramp via the [Ramp divider] (dCF) parameter. If the input falls back to state 1 and the run command is still active, the motor will only restart if 2-wire level control has been configured [2/3 wire control] (tCC) = [2 wire] (2C), and [2 wire type] (tCt) = [Level] (LEL) or [Fwd priority] (PFO), page 47). In other cases, a new run command must be sent.		
dCF ★	**[Ramp divider]**	0 to 10	4
	Parameter can be accessed where [Type of stop] (Stt) = [Fast stop] (FSt), page 65, and where [Fast stop] (FSt) is not [No] (nO), page 65. Ensure that the reduced ramp is not too low in relation to the load to be stopped. The value 0 corresponds to the minimum ramp.		

★ These parameters only appear if the corresponding function has been selected in another menu. When the parameters can also be accessed and set from within the configuration menu for the corresponding function, their description is detailed in these menus, on the pages indicated, to aid programming.

Code	Name/Description	Adjustment range	Factory setting
StC-	**[STOP MODES]** (continued)		
dC I	**❑ [DC injection assign.]**		[No] (nO)

⚠ WARNING

NO HOLDING TORQUE

- DC injection braking does not provide any holding torque at zero speed.
- DC injection braking does not work when there is a loss of power or when the drive detects a fault.
- Where necessary, use a separate brake to maintain torque levels.

Failure to follow these instructions can result in death, serious injury, or equipment damage.

Note1: This function is incompatible with the "Brake control" function (see page 21).
Note2: The DC injection stop is not effective when the drive is stopped with the JOG function activated.

- nO ☐ [No] (nO): Not assigned
- LI1 ☐ [LI1] (LI1): Logic input LI1
- LI2 ☐ [LI2] (LI2): Logic input LI2
- LI3 ☐ [LI3] (LI3): Logic input LI3
- LI4 ☐ [LI4] (LI4): Logic input LI4
- LI5 ☐ [LI5] (LI5): Logic input LI5
- LI6 ☐ [LI6] (LI6): Logic input LI6

If [ACCESS LEVEL] (LAC) = [Level 3] (L3), the following assignments are possible:

- CD11 ☐ [CD11] (CD11): Bit 11 of the control word from a communication network
- CD12 ☐ [CD12] (CD12): Bit 12 of the control word from a communication network
- CD13 ☐ [CD13] (CD13): Bit 13 of the control word from a communication network
- CD14 ☐ [CD14] (CD14): Bit 14 of the control word from a communication network
- CD15 ☐ [CD15] (CD15): Bit 15 of the control word from a communication network

Braking is activated when the logic state of the input or control word bit is at 1.

IdC	**❑ [DC inject. level 1]**	(1)(3)	0 to In (2)	0.7 In (2)

CAUTION

RISK OF DAMAGE TO MOTOR

- Check that the motor will withstand this current without overheating.

Failure to follow these instructions can result in equipment damage.

★ Parameter can be accessed if [Type of stop] (Stt) = [DC injection] (dCI), page 65, or if [DC injection assign.] (dCI) is not set to [No] (nO), page 66.
After 5 seconds, the injection current is limited to 0.5 [Mot. therm. current] (ItH) if set to a higher value.

(1) Parameter can also be accessed in the [SETTINGS] (SEt-) menu.
(2) In corresponds to the nominal drive current indicated in the Installation Manual and on the drive nameplate.
(3) **Note:** These settings are not related to the "automatic standstill DC injection" function.

★ These parameters only appear if the corresponding function has been selected in another menu. When the parameters can also be accessed and set from within the configuration menu for the corresponding function, their description is detailed in these menus, on the pages indicated, to aid programming.

Code	Name/Description	Adjustment range	Factory setting
StC-	**[STOP MODES]** (continued)		
tdC	**[DC injection time 2]** (1)(3)	0.1 to 30 s	0.5 s
★	**CAUTION** **RISK OF DAMAGE TO MOTOR** • Long periods of DC injection braking can cause overheating and damage the motor. • Protect the motor by avoiding long periods of DC injection braking. **Failure to follow these instructions can result in equipment damage.** Parameter can be accessed if [Type of stop] (Stt) = [DC injection] (dCI) , page 65.		
nSt	**[Freewheel stop ass.]**		[No] (nO)
nO LI1 LI2 LI3 LI4 LI5 LI6	☐ [No] (nO): Not assigned ☐ [LI1] (LI1): Logic input LI1 ☐ [LI2] (LI2): Logic input LI2 ☐ [LI3] (LI3): Logic input LI3 ☐ [LI4] (LI4): Logic input LI4 ☐ [LI5] (LI5): Logic input LI5 ☐ [LI6] (LI6): Logic input LI6 The stop is activated when the logic state of the input is at 0. If the input falls back to state 1 and the run command is still active, the motor will only restart if 2-wire level control has been configured. In other cases, a new run command must be sent.		

(1) Parameter can also be accessed in the [SETTINGS] (SEt-) menu.
(2) In corresponds to the nominal drive current indicated in the Installation Manual and on the drive nameplate.
(3) **Note:** These settings are not related to the "automatic standstill DC injection" function.

★ These parameters only appear if the corresponding function has been selected in another menu. When the parameters can also be accessed and set from within the configuration menu for the corresponding function, their description is detailed in these menus, on the pages indicated, to aid programming.

Code	Name/Description	Adjustment range	Factory setting
AdC-	**[AUTO DC INJECTION]**		
AdC	**❑ [Auto DC injection]**		[Yes] (YES)

If set to [Continuous] (Ct), this parameter causes injection current to be generated, even when there is no run command. This is not compatible with [Auto tuning] (tUn) = [Drv running] (rUn). this parameter can be changed at any time.

⚠ ⚠ DANGER

HAZARD OF ELECTRIC SHOCK, EXPLOSION, OR ARC FLASH

When **[Auto DC injection] (AdC)** = **[Continuous] (Ct),** the injection of current is done even if a run command has not been sent.

- Check this action will not endanger personnel or equipment in any way

Failure to follow these instructions will result in death or serious injury.

⚠ WARNING

NO HOLDING TORQUE

- DC injection braking does not provide any holding torque at zero speed.
- DC injection braking does not work when there is a loss of power or when the drive detects a fault.
- Where necessary, use a separate brake to maintain torque levels.

Failure to follow these instructions can result in death, serious injury, or equipment damage.

nO ☐ [No] (nO): No injection
YES ☐ [Yes] (YES): Standstill injection for adjustable period
Ct ☐ [Continuous] (Ct): Continuous standstill injection

tdC1	**❑ [Auto DC inj. time 1]**	(1)	0.1 to 30 s	0.5 s

CAUTION

RISK OF DAMAGE TO MOTOR

- Long periods of DC injection braking can cause overheating and damage the motor.
- Protect the motor by avoiding long periods of DC injection braking.

Failure to follow these instructions can result in equipment damage.

★ Parameter can be accessed if [Auto DC injection] (AdC) is not set to [No] (nO), page 68.

SdC1	**❑ [Auto DC inj. level 1]**	(1)	0 to 1.2 In (2)	0.7 In (2)

CAUTION

RISK OF DAMAGE TO MOTOR

- Check that the motor will withstand this current without overheating.

Failure to follow these instructions can result in equipment damage.

★ Parameter can be accessed if [Auto DC injection] (AdC) is not set to [No] (nO), page 68.
Note: Check that the motor will withstand this current without overheating.

(1) Parameter can also be accessed in the [SETTINGS] (SEt-) menu.
(2) In corresponds to the nominal drive current indicated in the Installation Manual and on the drive nameplate.

★ These parameters only appear if the corresponding function has been selected in another menu. When the parameters can also be accessed and set from within the configuration menu for the corresponding function, their description is detailed in these menus, on the pages indicated, to aid programming.

Code	Name/Description		Adjustment range	Factory setting
AdC-	**[AUTO DC INJECTION] (continued)**			
tdC2	❑ **[Auto DC inj. time 2]**	(1)	0 to 30 s	0 s

CAUTION

RISK OF DAMAGE TO MOTOR

- Long periods of DC injection braking can cause overheating and damage the motor.
- Protect the motor by avoiding long periods of DC injection braking.

Failure to follow these instructions can result in equipment damage.

★ Parameter can be accessed if [Auto DC injection] (AdC) is not set to [No] (nO), page 68.

SdC2	❑ **[Auto DC inj. level 2]**	(1)	0 to 1.2 In (2)	0.5 In (2)

CAUTION

RISK OF DAMAGE TO MOTOR

- Check that the motor will withstand this current without overheating.

Failure to follow these instructions can result in equipment damage.

★ Parameter can be accessed if [Auto DC injection] (AdC) is not set to [No] (nO), page 68.

AdC	SdC2	Operation
YES	x	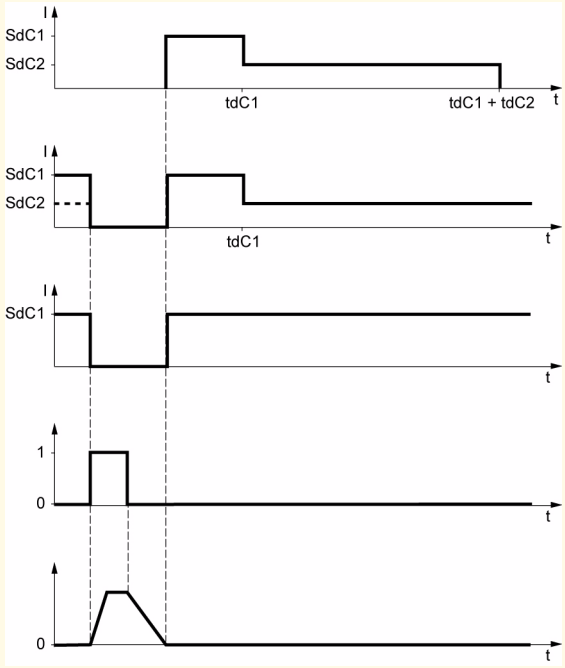
Ct	≠ 0	
Ct	= 0	
Run command		
Speed		

(1) Parameter can also be accessed in the [SETTINGS] (SEt-) menu.
(2) In corresponds to the nominal drive current indicated in the Installation Manual and on the drive nameplate.

★ These parameters only appear if the corresponding function has been selected in another menu. When the parameters can also be accessed and set from within the configuration menu for the corresponding function, their description is detailed in these menus, on the pages indicated, to aid programming.

Code	Name/Description	Adjustment range	Factory setting
SA1-	**[SUMMING INPUTS]** Can be used to sum one or two inputs to the [Ref.1 channel] (Fr1) reference only. **Note:** The "Summing inputs" function may be incompatible with other functions (see page 21).		
SA2	**[Summing ref. 2]**		[AI2] (AI2)
no	☐ [No] (nO): Not assigned		
AI1	☐ [AI1] (AI1): Analog input AI1		
AI2	☐ [AI2] (AI2): Analog input AI2		
AI3	☐ [AI3] (AI3): Analog input AI3		
AIV1	☐ [AI Virtual 1] (AIV1): Jog dial		
	If [ACCESS LEVEL] (LAC) = [Level 3] (L3), the following assignments are possible:		
LCC	☐ [HMI] (LCC): Reference via the remote display terminal, [HMI Frequency ref.] (LFr) parameter in the [SETTINGS] (SEt-) menu, page 32.		
Mdb	☐ [Modbus] (Mdb): Reference via Modbus		
nEt	☐ [Com. card] (nEt): Reference via network		
SA3	**[Summing ref. 3]**		[No] (nO)
no	☐ [No] (nO): Not assigned		
AI1	☐ [AI1] (AI1): Analog input AI1		
AI2	☐ [AI2] (AI2): Analog input AI2		
AI3	☐ [AI3] (AI3): Analog input AI3		
AIV1	☐ [AI Virtual 1] (AIV1): Jog dial		
	If [ACCESS LEVEL] (LAC) = [Level 3] (L3), the following assignments are possible:		
LCC	☐ [HMI] (LCC): Reference via the remote display terminal, [HMI Frequency ref.] (LFr) parameter in the [SETTINGS] (SEt-) menu, page 32.		
Mdb	☐ [Modbus] (Mdb): Reference via Modbus		
nEt	☐ [Com. card] (nEt): Reference via network		

Summing inputs

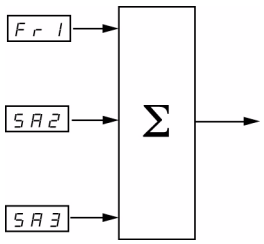

Note:
AI2 is a ± 10 V input which can be used for subtraction by summing a negative signal.

See the complete block diagrams on pages 53 and 55.

Preset speeds

2, 4, 8 or 16 speeds can be preset, requiring 1, 2, 3 or 4 logic inputs respectively.

The following assignment order must be observed: [2 preset speeds] (PS2), then [4 preset speeds] (PS4), then [8 preset speeds] (PS8), then [16 preset speeds] (PS16).

Combination table for preset speed inputs

16 speeds LI (PS16)	8 speeds LI (PS8)	4 speeds LI (PS4)	2 speeds LI (PS2)	Speed reference
0	0	0	0	Reference (1)
0	0	0	1	SP2
0	0	1	0	SP3
0	0	1	1	SP4
0	1	0	0	SP5
0	1	0	1	SP6
0	1	1	0	SP7
0	1	1	1	SP8
1	0	0	0	SP9
1	0	0	1	SP10
1	0	1	0	SP11
1	0	1	1	SP12
1	1	0	0	SP13
1	1	0	1	SP14
1	1	1	0	SP15
1	1	1	1	SP16

(1) See the block diagrams on page 53 and page 55: Reference 1 = (SP1).

Note: If Fr1 = LCC and rPI= nO, then PI reference (%) = 10 * AI (Hz) / 15

Code	Name/Description	Adjustment range	Factory setting
PSS-	**[PRESET SPEEDS]** **Note:** The "Preset speeds" function may be incompatible with other functions (see page 21).		
PS2	**[2 preset speeds]** Selecting the assigned logic input activates the function.		[LI3] (LI3)
nO	☐ [No] (nO): Not assigned		
LI1	☐ [LI1] (LI1): Logic input LI1		
LI2	☐ [LI2] (LI2): Logic input LI2		
LI3	☐ [LI3] (LI3): Logic input LI3		
LI4	☐ [LI4] (LI4): Logic input LI4		
LI5	☐ [LI5] (LI5): Logic input LI5		
LI6	☐ [LI6] (LI6): Logic input LI6		
	If [ACCESS LEVEL] (LAC) = [Level 3] (L3), the following assignments are possible:		
CD11	☐ [CD11] (CD11): Bit 11 of the control word from a communication network		
CD12	☐ [CD12] (CD12): Bit 12 of the control word from a communication network		
CD13	☐ [CD13] (CD13): Bit 13 of the control word from a communication network		
CD14	☐ [CD14] (CD14): Bit 14 of the control word from a communication network		
CD15	☐ [CD15] (CD15): Bit 15 of the control word from a communication network		
PS4	**[4 preset speeds]** Selecting the assigned logic input activates the function. Ensure that [2 preset speeds] (PS2) has been assigned before assigning [4 preset speeds] (PS4).		[LI4] (LI4)
nO	☐ [No] (nO): Not assigned		
LI1	☐ [LI1] (LI1): Logic input LI1		
LI2	☐ [LI2] (LI2): Logic input LI2		
LI3	☐ [LI3] (LI3): Logic input LI3		
LI4	☐ [LI4] (LI4): Logic input LI4		
LI5	☐ [LI5] (LI5): Logic input LI5		
LI6	☐ [LI6] (LI6): Logic input LI6		
	If [ACCESS LEVEL] (LAC) = [Level 3] (L3), the following assignments are possible:		
CD11	☐ [CD11] (CD11): Bit 11 of the control word from a communication network		
CD12	☐ [CD12] (CD12): Bit 12 of the control word from a communication network		
CD13	☐ [CD13] (CD13): Bit 13 of the control word from a communication network		
CD14	☐ [CD14] (CD14): Bit 14 of the control word from a communication network		
CD15	☐ [CD15] (CD15): Bit 15 of the control word from a communication network		
PS8	**[8 preset speeds]** Selecting the assigned logic input activates the function. Ensure that [4 preset speeds] (PS4) has been assigned before assigning [8 preset speeds] (PS8).		[No] (nO)
nO	☐ [No] (nO): Not assigned		
LI1	☐ [LI1] (LI1): Logic input LI1		
LI2	☐ [LI2] (LI2): Logic input LI2		
LI3	☐ [LI3] (LI3): Logic input LI3		
LI4	☐ [LI4] (LI4): Logic input LI4		
LI5	☐ [LI5] (LI5): Logic input LI5		
LI6	☐ [LI6] (LI6): Logic input LI6		
	If [ACCESS LEVEL] (LAC) = [Level 3] (L3), the following assignments are possible:		
CD11	☐ [CD11] (CD11): Bit 11 of the control word from a communication network		
CD12	☐ [CD12] (CD12): Bit 12 of the control word from a communication network		
CD13	☐ [CD13] (CD13): Bit 13 of the control word from a communication network		
CD14	☐ [CD14] (CD14): Bit 14 of the control word from a communication network		
CD15	☐ [CD15] (CD15): Bit 15 of the control word from a communication network		

Code	Name/Description		Adjustment range	Factory setting
PSS-	**[PRESET SPEEDS]** (continued)			
PS16	❑ **[16 preset speeds]** Selecting the assigned logic input activates the function. Ensure that [8 preset speeds] (PS8) has been assigned before assigning [16 preset speeds] (PS16). ☐ [No] (nO): Not assigned ☐ [LI1] (LI1): Logic input LI1 ☐ [LI2] (LI2): Logic input LI2 ☐ [LI3] (LI3): Logic input LI3 ☐ [LI4] (LI4): Logic input LI4 ☐ [LI5] (LI5): Logic input LI5 ☐ [LI6] (LI6): Logic input LI6 If [ACCESS LEVEL] (LAC) = [Level 3] (L3), the following assignments are possible: ☐ [CD11] (CD11): Bit 11 of the control word from a communication network ☐ [CD12] (CD12): Bit 12 of the control word from a communication network ☐ [CD13] (CD13): Bit 13 of the control word from a communication network ☐ [CD14] (CD14): Bit 14 of the control word from a communication network ☐ [CD15] (CD15): Bit 15 of the control word from a communication network			[No] (nO)
SP2 ★	❑ **[Preset speed 2]**	(1)	0.0 to 500.0 Hz (2)	10 Hz
SP3 ★	❑ **[Preset speed 3]**	(1)	0.0 to 500.0 Hz (2)	15 Hz
SP4 ★	❑ **[Preset speed 4]**	(1)	0.0 to 500.0 Hz (2)	20 Hz
SP5 ★	❑ **[Preset speed 5]**	(1)	0.0 to 500.0 Hz (2)	25 Hz
SP6 ★	❑ **[Preset speed 6]**	(1)	0.0 to 500.0 Hz (2)	30 Hz
SP7 ★	❑ **[Preset speed 7]**	(1)	0.0 to 500.0 Hz (2)	35 Hz
SP8 ★	❑ **[Preset speed 8]**	(1)	0.0 to 500.0 Hz (2)	40 Hz
SP9 ★	❑ **[Preset speed 9]**	(1)	0.0 to 500.0 Hz (2)	45 Hz
SP10 ★	❑ **[Preset speed 10]**	(1)	0.0 to 500.0 Hz (2)	50 Hz

(1) Parameter can also be accessed in the [SETTINGS] (SEt-) menu. This parameter will depend on how many speeds have been configured.

(2) Reminder: The speed remains limited by the [High speed] (HSP) parameter, page 33.

★ These parameters only appear if the corresponding function has been selected in another menu. When the parameters can also be accessed and set from within the configuration menu for the corresponding function, their description is detailed in these menus, on the pages indicated, to aid programming.

Code	Name/Description		Adjustment range	Factory setting
PSS-	■ [PRESET SPEEDS] (continued)			
SP11 ★	❑ [Preset speed 11]	(1)	0.0 to 500.0 Hz (2)	55 Hz
SP12 ★	❑ [Preset speed 12]	(1)	0.0 to 500.0 Hz (2)	60 Hz
SP13 ★	❑ [Preset speed 13]	(1)	0.0 to 500.0 Hz (2)	70 Hz
SP14 ★	❑ [Preset speed 14]	(1)	0.0 to 500.0 Hz (2)	80 Hz
SP15 ★	❑ [Preset speed 15]	(1)	0.0 to 500.0 Hz (2)	90 Hz
SP16 ★	❑ [Preset speed 16]	(1)	0.0 to 500.0 Hz (2)	100 Hz

(1) Parameter can also be accessed in the [SETTINGS] (SEt-) menu. This parameter will depend on how many speeds have been configured.

(2) Reminder: The speed remains limited by the [High speed] (HSP) parameter, page 33.

★ These parameters only appear if the corresponding function has been selected in another menu. When the parameters can also be accessed and set from within the configuration menu for the corresponding function, their description is detailed in these menus, on the pages indicated, to aid programming.

Code	Name/Description	Adjustment range	Factory setting
JoG-	**[JOG]** **Note:** The "Jog operation" function may be incompatible with other functions (see page 21).		
JoG	❑ **[JOG]** Selecting the assigned logic input activates the function. ☐ [No] (nO): Not assigned ☐ [LI1] (LI1): Logic input LI1 ☐ [LI2] (LI2): Logic input LI2 ☐ [LI3] (LI3): Logic input LI3 ☐ [LI4] (LI4): Logic input LI4 ☐ [LI5] (LI5): Logic input LI5 ☐ [LI6] (LI6): Logic input LI6 Example: 2-wire control operation ([2/3 wire control] (tCC) = [2 wire] (2C)) 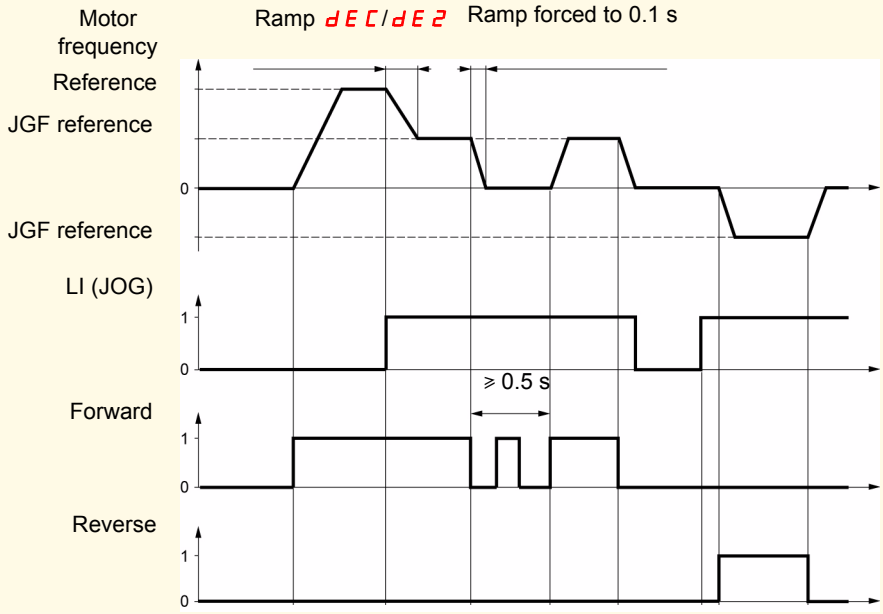 	[No] (nO)	
nO LI1 LI2 LI3 LI4 LI5 LI6			
JGF ★	❑ **[Jog frequency]** (1) Parameter can be accessed if [JOG] (JOG) is not set to [No] (nO), page 75.	0 to 10 Hz	10 Hz

(1) Parameter can also be accessed in the [SETTINGS] (SEt-) menu.

★ These parameters only appear if the corresponding function has been selected in another menu. When the parameters can also be accessed and set from within the configuration menu for the corresponding function, their description is detailed in these menus, on the pages indicated, to aid programming.

+/- speed

Function can only be accessed if [ACCESS LEVEL] (LAC) = [Level 2] (L2) or [Level 3] (L3), page 58.
Two types of operation are available.

1. **Use of single action buttons:** Two logic inputs are required in addition to the direction(s) of operation.
   The input assigned to the "+ speed" command increases the speed, the input assigned to the "- speed" command decreases the speed.
   Note:
   If the "+ speed" and "- speed" commands are activated at the same time, "- speed" will be given priority.

2. **Use of double action buttons:** Only one logic input assigned to "+ speed" is required.

+/- speed with double action buttons:

Description: 1 button pressed twice for each direction of rotation. Each action closes a contact.

	Released (- speed)	1st press (speed maintained)	2nd press (+ speed)
Forward button	–	a	a and b
Reverse button	–	c	c and d

Wiring example:

LI1: Forward
LIx: Reverse
LIy: + speed

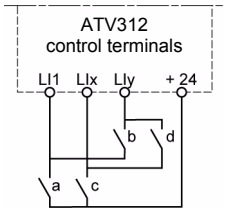

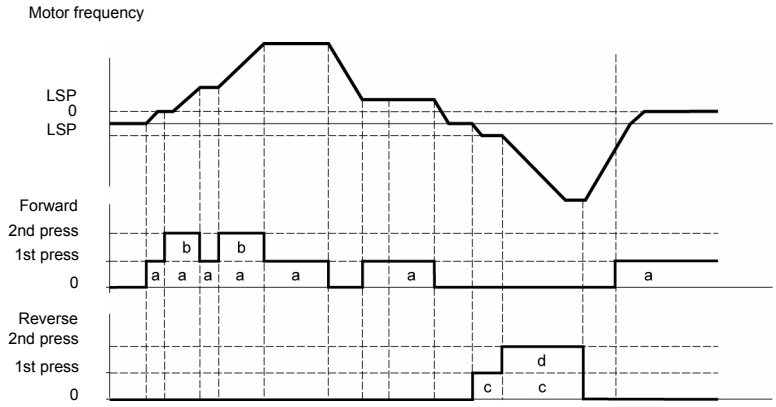

This type of +/- speed is incompatible with 3-wire control.

Whichever type of operation is selected, the max. speed is set by the [High speed] (HSP) parameter, page 33.

Note:
If the reference is switched via [Ref. 2 switching] (rFC), page 59, from one reference channel to any other reference channel with "+/- speed", the value of the [Output frequency] (rFr) reference (after ramp) is copied at the same time. This prevents the speed being incorrectly reset to zero when switching takes place.

[APPLICATION FUNCT.] (FUn-) menu

Code	Name/Description	Adjustment range	Factory setting
uPd-	**[+/- SPEED]** **(motorized jog dial)** Function can only be accessed if [ACCESS LEVEL] (LAC) = [Level 2] (L2) or [Level 3] (L3), and [+/-spd HMI] (UPdH) or [+/- SPEED] (UPdt) selected, page 58. **Note:** The "+/- speed" function is incompatible with several functions (see page 21). It can only be configured if these functions are unassigned, in particular the summing inputs (set [Summing ref. 2] (SA2) to [No] (nO), page 70) and the preset speeds (set [2 preset speeds] (PS2) and [4 preset speeds] (PS4) to [No] (nO), page 72) which will have been assigned as part of the factory settings.		
uSP ★ nO LI1 LI2 LI3 LI4 LI5 LI6	**[+ speed assignment]** Parameter accessible for [+/- SPEED] (UPdt) only. Selecting the assigned logic input activates the function. ☐ [No] (nO): Not assigned ☐ [LI1] (LI1): Logic input LI1 ☐ [LI2] (LI2): Logic input LI2 ☐ [LI3] (LI3): Logic input LI3 ☐ [LI4] (LI4): Logic input LI4 ☐ [LI5] (LI5): Logic input LI5 ☐ [LI6] (LI6): Logic input LI6		[No] (nO)
dSP ★ nO LI1 LI2 LI3 LI4 LI5 LI6	**[-Speed assignment]** Parameter accessible for [+/- SPEED] (UPdt) only. Selecting the assigned logic input activates the function. ☐ [No] (nO): Not assigned ☐ [LI1] (LI1): Logic input LI1 ☐ [LI2] (LI2): Logic input LI2 ☐ [LI3] (LI3): Logic input LI3 ☐ [LI4] (LI4): Logic input LI4 ☐ [LI5] (LI5): Logic input LI5 ☐ [LI6] (LI6): Logic input LI6		[No] (nO)
Str ★ nO rAn EEP	**[Reference saved]** Associated with the "+/- speed" function, this parameter can be used to save the reference: • When the run commands disappear (saved to RAM) • When the line supply or the run commands disappear (saved to EEPROM) Therefore, the next time the drive starts up, the speed reference is the last reference saved. ☐ [No] (nO): No saving ☐ [RAM] (rAM): Saving in RAM ☐ [EEprom] (EEP): Saving in EEPROM		[No] (nO)

★ These parameters only appear if the corresponding function has been selected in another menu. When the parameters can also be accessed and set from within the configuration menu for the corresponding function, their description is detailed in these menus, on the pages indicated, to aid programming.

PI regulator

Block diagram

The function is activated by assigning an analog input to the PI feedback (measurement).

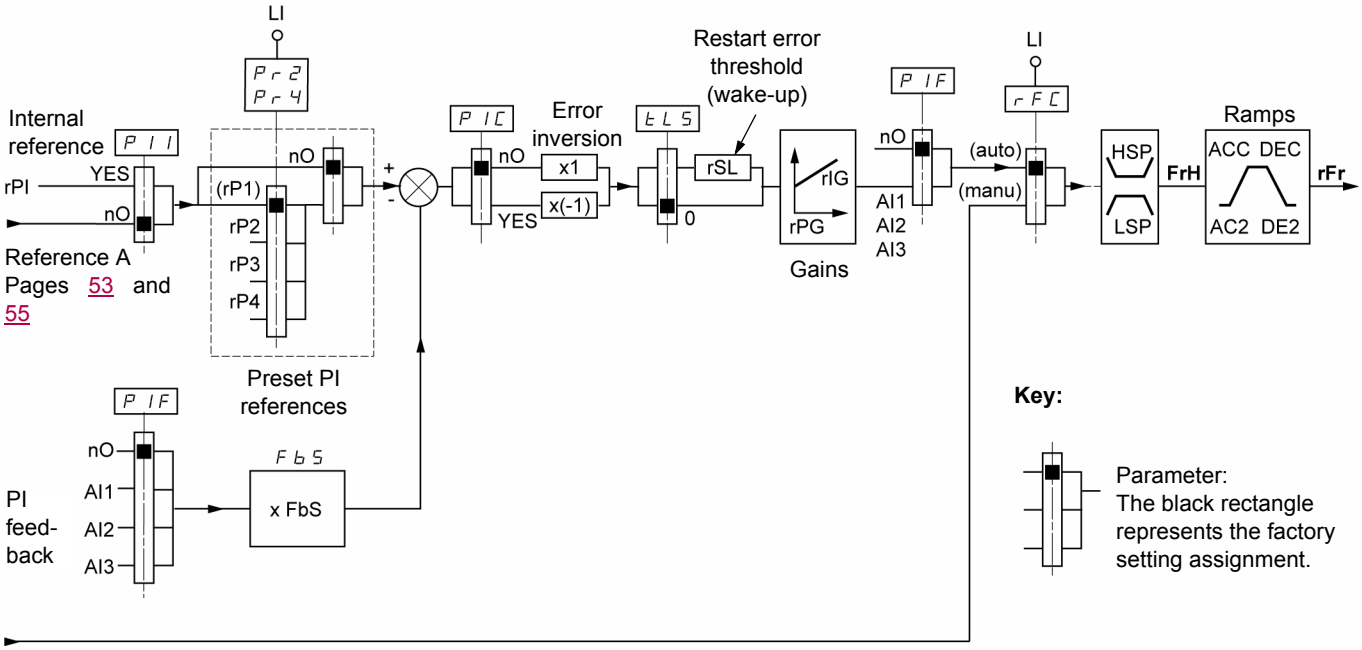

Reference B
Pages 53 and 55

PI feedback:

PI feedback must be assigned to one of these analog inputs, AI1, AI2, or AI3.

PI reference:

The PI reference can be assigned to the following parameters in order of priority:

- Preset references via logic inputs, [Preset ref. PID 2] (rP2), [Preset ref. PID 3] (rP3), and [Preset ref. PID 4] (rP4), page 81
- Internal reference [Internal PID ref.] (rPI), page 82
- Reference [Ref.1 channel] (Fr1), page 58

Combination table for preset PI references

LI (Pr4)	LI (Pr2)	Pr2 = nO	Reference
			rPI or Fr1
0	0		rPI or Fr1
0	1		rP2
1	0		rP3
1	1		rP4

Parameters can also be accessed in the [SETTINGS] (SEt-) menu:

- [Internal PID ref.] (rPI), page 32
- [Preset ref. PID 2] (rP2), [Preset ref. PID 3] (rP3), and [Preset ref. PID 4] (rP4), page 36
- [PID prop. gain] (rPG), page 36
- [PID integral gain] (rIG), page 36
- [PID fbk scale factor] (FbS), page 36:
  The [PID fbk scale factor] (FbS) parameter can be used to scale the reference according to the variation range for PI feedback (sensor rating).
  Example: Regulating pressure
  PI reference (process) 0-5 bar (0-100%)
  Rating of pressure sensor 0-10 bar
  [PID fbk scale factor] (FbS) = max. sensor scaling/max. process
  [PID fbk scale factor] (FbS) = 10/5= 2
- [PID wake up thresh.] (rSL), page 38:
  Can be used to set the PI error threshold above which the PI regulator will be reactivated (wake-up) after a stop due to the max. time threshold being exceeded at low speed [Low speed time out] (tLS)
- [PID correct. reverse] (PIC), page 36: If [PID correct. reverse] (PIC) = [No] (nO), the speed of the motor will increase when the error is positive (example: pressure control with a compressor). If [PID correct. reverse] (PIC) = [Yes] (YES), the speed of the motor will decrease when the error is positive (example: temperature control using a cooling fan).

"Manual - Automatic" operation with PI

This function combines the PI regulator and [Ref. 2 switching] (rFC) reference switching, page 59. The speed reference is given by [Ref.2 channel] (Fr2) or by the PI function, depending on the state of the logic input.

Setting up the PI regulator

1. **Configuration in PI mode**
   See the block diagram on page 78.
2. **Perform a test in factory settings mode (in most cases, this will be sufficient)**.
   To optimize the drive, adjust [PID prop. gain.] (rPG) or [PID integral gain] (rIG) gradually and independently, and observe the effect on the PI feedback in relation to the reference.
3. **If the factory settings are unstable or the reference is incorrect:**

Perform a test with a speed reference in manual mode (without PI regulator) and with the drive on load for the speed range of the system:
- In steady state, the speed must be stable and comply with the reference, and the PI feedback signal must be stable.
- In transient state, the speed must follow the ramp and stabilize quickly, and the PI feedback must follow the speed.

If this is not the case, see the settings for the drive and/or sensor signal and cabling.

Switch to PI mode.
Set [Dec ramp adapt.] (brA) to no (no auto-adaptation of the ramp).
Set the [Acceleration] (ACC) and [Deceleration] (dEC) speed ramps to the minimum level permitted by the mechanics without triggering an [OVERBRAKING] (ObF) fault.
Set the integral gain [PID integral gain] (rIG) to the minimum level.
Observe the PI feedback and the reference.
Switch the drive ON/OFF repeatedly or quickly vary the load or reference a number of times.
Set the proportional gain [PID prop. gain] (rPG) in order to ascertain a good compromise between response time and stability in transient phases (slight overshoot and 1 to 2 oscillations before stabilizing).
If the reference varies from the preset value in steady state, gradually increase the integral gain [PID integral gain] (rIG), reduce the proportional gain [PID prop. gain] (rPG) in the event of instability (pump applications), and find a compromise between response time and static precision (see diagram).
Perform in-production tests over the whole reference range.

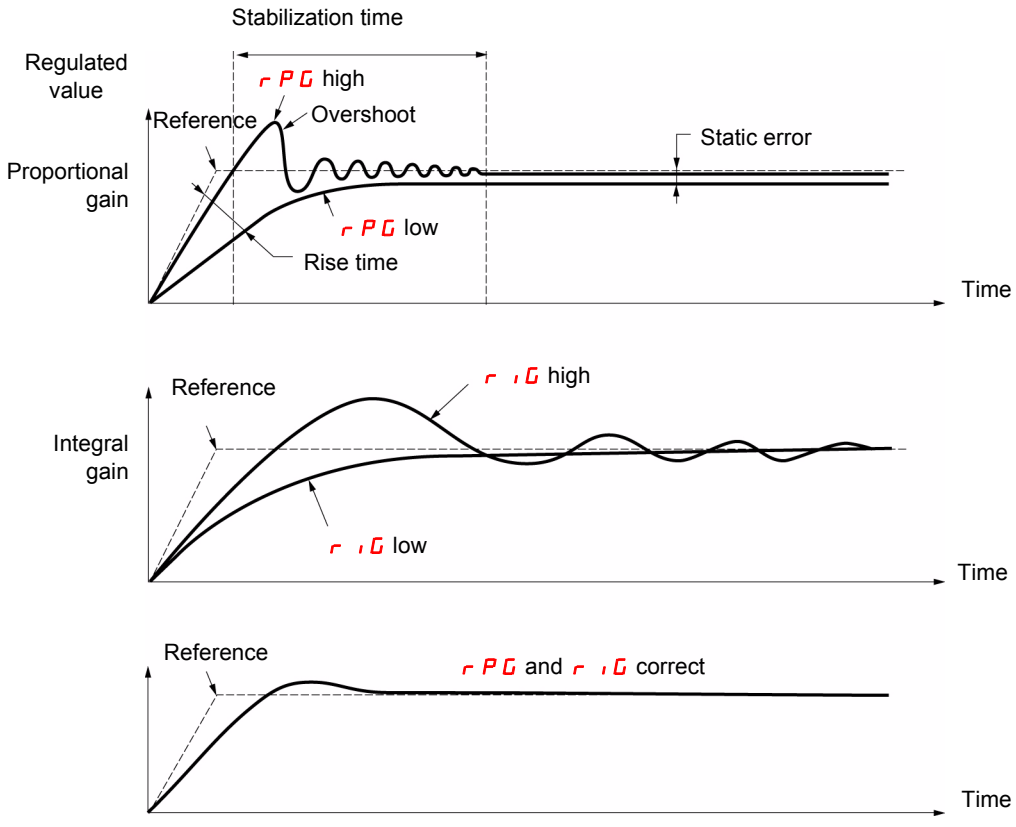

The oscillation frequency depends on the system dynamics.

Parameter	Rise time	Overshoot	Stabilization time	Static error
[PID prop. gain] (rPG) ↗	↘↘	↗	=	↘
[PID integral gain] (rIG) ↗	↘	↗↗	↗	↘↘

[APPLICATION FUNCT.] (FUn-) menu

Code	Name/Description	Adjustment range	Factory setting
PI-	**[PI REGULATOR]** **Note:** The "PI regulator" function is incompatible with several functions (see page 21). It can only be configured if these functions are unassigned, in particular the summing inputs (set [Summing ref. 2] (SA2) to [No] (nO), page 70) and the preset speeds (set [2 preset speeds] (PS2) and [4 preset speeds] (PS4) to [No] (nO), page 72) which will have been assigned as part of the factory settings.		
PIF	**[PID feedback ass.]** ☐ [No] (nO): Not assigned ☐ [AI1] (AI1): Analog input AI1 ☐ [AI2] (AI2): Analog input AI2 ☐ [AI3] (AI3): Analog input AI3		[No] (nO)
rPG ★	**[PID prop. gain]** (1) Parameter is only visible if [PID feedback ass.] (PIF) is not set to [No] (nO), page 80. It provides dynamic performance when PI feedback is changing quickly.	0.01 to 100	1
rIG ★	**[PID integral gain]** (1) Parameter is only visible if [PID feedback ass.] (PIF) is not set to [No] (nO), page 80. It provides static precision when PI feedback is changing slowly.	0.01 to 100	1
FbS ★	**[PID fbk scale factor]** (1) Parameter is only visible if [PID feedback ass.] (PIF) is not set to [No] (nO), page 80. For adapting the process.	0.1 to 100	1
PIC ★	**[PID correct. reverse]** Parameter is only visible if [PID feedback ass.] (PIF) is not set to [No] (nO), page 80. ☐ [No] (nO): Normal ☐ [Yes] (YES): Reverse		[No] (nO)
Pr2 ★	**[2 preset PID ref.]** Parameter is only visible if [PID feedback ass.] (PIF) is not set to [No] (nO), page 80. Selecting the assigned logic input activates the function. ☐ [No] (nO): Not assigned ☐ [LI1] (LI1): Logic input LI1 ☐ [LI2] (LI2): Logic input LI2 ☐ [LI3] (LI3): Logic input LI3 ☐ [LI4] (LI4): Logic input LI4 ☐ [LI5] (LI5): Logic input LI5 ☐ [LI6] (LI6): Logic input LI6 If [ACCESS LEVEL] (LAC) = [Level 3] (L3), the following assignments are possible: ☐ [CD11] (CD11): Bit 11 of the control word from a communication network ☐ [CD12] (CD12): Bit 12 of the control word from a communication network ☐ [CD13] (CD13): Bit 13 of the control word from a communication network ☐ [CD14] (CD14): Bit 14 of the control word from a communication network ☐ [CD15] (CD15): Bit 15 of the control word from a communication network		[No] (nO)

(1) Parameter(s) can also be accessed in the [SETTINGS] (SEt-) menu.

★ These parameters only appear if the corresponding function has been selected in another menu. When the parameters can also be accessed and set from within the configuration menu for the corresponding function, their description is detailed in these menus, on the pages indicated, to aid programming.

[APPLICATION FUNCT.] (FUn-) menu

Code	Name/Description		Adjustment range	Factory setting
P i -	**[PI REGULATOR]** (continued)			
P r 4 ★	**❑ [4 preset PID ref.]** Parameter is only visible if [PID feedback ass.] (PIF) is not set to [No] (nO), page 80. Selecting the assigned logic input activates the function. Make sure that [2 preset PID ref.] (Pr2), page 80, has been assigned before assigning [4 preset PID ref.] (Pr4). ☐ [No] (nO): Not assigned ☐ [LI1] (LI1): Logic input LI1 ☐ [LI2] (LI2): Logic input LI2 ☐ [LI3] (LI3): Logic input LI3 ☐ [LI4] (LI4): Logic input LI4 ☐ [LI5] (LI5): Logic input LI5 ☐ [LI6] (LI6): Logic input LI6 If [ACCESS LEVEL] (LAC) = [Level 3] (L3), the following assignments are possible: ☐ [CD11] (CD11): Bit 11 of the control word from a communication network ☐ [CD12] (CD12): Bit 12 of the control word from a communication network ☐ [CD13] (CD13): Bit 13 of the control word from a communication network ☐ [CD14] (CD14): Bit 14 of the control word from a communication network ☐ [CD15] (CD15): Bit 15 of the control word from a communication network			[No] (nO)
r P 2 ★	**❑ [Preset ref. PID 2]** See page 36.	(1)	0 to 100%	30%
r P 3 ★	**❑ [Preset ref. PID 3]** See page 36.	(1)	0 to 100%	60%
r P 4 ★	**❑ [Preset ref. PID 4]** See page 36.	(1)	0 to 100%	90%

(1) Parameter(s) can also be accessed in the [SETTINGS] (SEt-) menu.

★ These parameters only appear if the corresponding function has been selected in another menu. When the parameters can also be accessed and set from within the configuration menu for the corresponding function, their description is detailed in these menus, on the pages indicated, to aid programming.

Code	Name/Description	Adjustment range	Factory setting
PI-	**[PI REGULATOR]** (continued)		
rSL ★	**[PID wake up thresh.]** (1) **⚠ DANGER** **UNINTENDED EQUIPMENT OPERATION** • Check that unintended restarts will not present any danger. **Failure to follow these instructions will result in death or serious injury.** If the "PI" and "Low speed operating time" [Low speed time out] (tLS) (page 38) are configured at the same time, the PI regulator may attempt to set a speed lower than[Low speed] (LSP). This results in unsatisfactory operation, which consists of starting, operating at [Low speed] (LSP), then stopping, and so on. The rSL (restart error threshold) parameter can be used to set a minimum PI error threshold for restarting after a stop at prolonged [Low speed] (LSP). The function is inactive if [Low speed time out] (tLS) = 0.	0 to 100%	0%
PII ★ nO YES	**[Act. internal PID ref.]** ☐ [No] (nO): The reference for the PI regulator is [Ref.1 channel] (Fr1), except for [+/-spd HMI] (UPdH) and [+/- SPEED] (UPdt) (+/- speed cannot be used as a reference for the PI regulator). ☐ [Yes] (YES): The reference for the PI regulator is provided internally via the [Internal PID ref.] (rPI) parameter.		[No] (nO)
rPI ★	**[Internal PID ref.]** (1) Parameter is only visible if [PID feedback ass.] (PIF) is not set to [No] (nO), page 80.	0 to 100%	0%

(1) Parameter(s) can also be accessed in the [SETTINGS] (SEt-) menu.

★ These parameters only appear if the corresponding function has been selected in another menu. When the parameters can also be accessed and set from within the configuration menu for the corresponding function, their description is detailed in these menus, on the pages indicated, to aid programming.

Brake control

Function can only be accessed if [ACCESS LEVEL] (LAC) = [Level 2] (L2) or [Level 3] (L3) (page 53).
This function, which can be assigned to relay R2 or logic output AOC, enables the drive to manage an electromagnetic brake.

Principle

Synchronize brake release with the build-up of torque during startup and brake engage at zero speed on stopping, to help prevent jolting.

Brake sequence

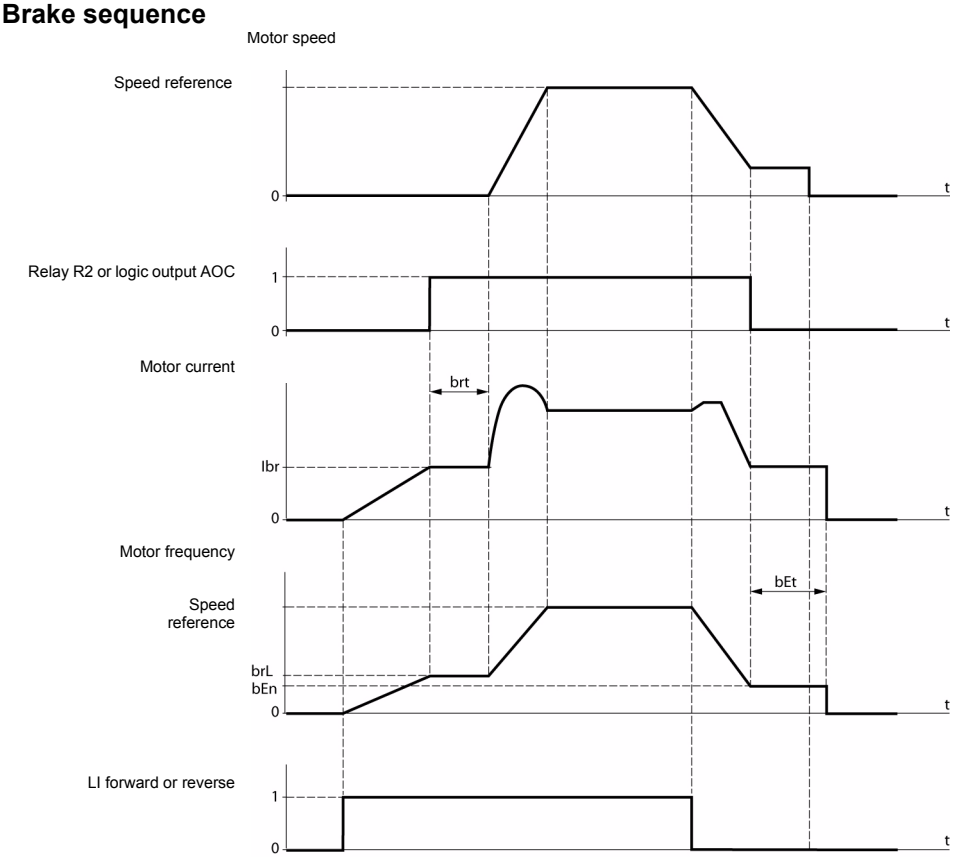

State of brake	Engaged	Released	Engaged

Settings which can be accessed in the application functions [APPLICATION FUNCT.] (FUn-) menu:

- Brake release frequency [Brake release freq] (brL)
- Brake release current [Brake release I FW] (Ibr)
- Brake release time delay [Brake Release time] (brt)
- Brake engage frequency [Brake engage freq] (bEn)
- Brake engage time delay [Brake engage time] (bEt)
- Brake release pulse [Brake impulse] (bIP)

Recommended brake control settings:

1. [Brake release freq] (brL), page 84:
   - Horizontal movement: Set to 0.
   - Vertical movement: Set to a frequency equal to the nominal motor slip in Hz.

2. [Brake release I FW] (Ibr), page 84:
   - Horizontal movement: Set to 0.
   - Vertical movement: Preset the nominal current of the motor then adjust it in order to help prevent jolting on start-up, making sure that the maximum load is held when the brake is released.

3. [Brake Release time] (brt), page 84:
   Adjust according to the type of brake. It is the time required for the mechanical brake to release.

4. [Brake engage freq] (bEn), page 84:
   - Horizontal movement: Set to 0.
   - Vertical movement: Set to a frequency equal to the nominal motor slip in Hz. **Note:** Max. [Brake engage freq] (bEn) **=** [Low speed] (LSP)**; this means an appropriate value must be set in advance for** [Low speed] (LSP).

5. [Brake engage time] (bEt), page 85:
   Adjust according to the type of brake. It is the time required for the mechanical brake to engage.

6. [Brake impulse] (bIP), page 85:
   - Horizontal movement: Set to [No] (nO).
   - Vertical movement: Set to [Yes] (YES) and check that the motor torque direction for "run forward" control corresponds to the upward direction of the load. If necessary, reverse two motor phases. This parameter generates motor torque in an upward direction regardless of the direction of operation commanded in order to maintain the load whilst the brake is releasing.

Code	Name/Description	Adjustment range	Factory setting
bLC-	**[BRAKE LOGIC CONTROL]** Function can only be accessed if [ACCESS LEVEL] (LAC) = [Level 2] (L2) or [Level 3] (L3), page 58. **Note:** This function may be incompatible with other functions (see page 21).		
bLC no r2 dO	**❑ [Brake assignment]** ☐ [No] (nO): Not assigned ☐ [R2] (r2): Relay R2 ☐ [DO] (dO): Logic output AOC If [Brake assignment] (bLC) is assigned, the [Catch on the fly] (FLr) parameter, page 93, and the [Dec ramp adapt.] (brA) parameter, page 64, are forced to [No] (nO), and the [Output Phase Loss] (OPL) parameter, page 94, is forced to [Yes] (YES). [Brake assignment] (bLC) is forced to [No] (nO) if [Output Phase Loss] (OPL) = [Output cut] (OAC), page 94.		[No] (nO)
brL ★	**❑ [Brake release freq]** Brake release frequency.	0.0 to 10.0 Hz	In accordance with the drive rating
Ibr ★	**❑ [Brake release I FW]** Brake release current threshold for ascending or forward movement. If the value of the current [brake release I FW] (Ibr) is lower than that the fluxing current of the motor, an output phase disconnection may not be detected before releasing the brake and the load may drop. **⚠ WARNING** **UNEXPECTED EQUIPMENT OPERATION** In applications involving vertical movement, the value of the current [brake release I FW] (Ibr) must be set above the value of the fluxing current of the motor. If this condition is not satisfied, a drive with encoder feedback must be used. **Failure to follow these instructions can result in death, serious injury, or equipment damage.** The fluxing current of a motor is equal to In * Square (1 - Cos² φ) with Cos φ indicated on the nameplate of the motor.	0 to 1.36 In (1)	In accordance with the drive rating
brt ★	**❑ [Brake Release time]** Brake release time delay.	0 to 5 s	0.5 s
LSP ★	**❑ [Low speed]** Motor frequency at min. reference. This parameter can also be changed in the [SETTINGS] (SEt-) menu, page 33.	0 to HSP (page 33)	0 LSP
bEn ★ no 0 to LSP	**❑ [Brake engage freq]** ☐ Not set ☐ Adjustment range in Hz If [Brake assignment] (bLC) is assigned and [Brake engage freq] (bEn) remains set to [No] (nO), the drive will lock in [BRAKE CONTROL FAULT] (bLF) mode on the first run command.	nO - 0 to LSP	[No] (nO)

(1) In corresponds to the nominal drive current indicated in the Installation Manual and on the drive nameplate.

★ These parameters only appear if the corresponding function has been selected in another menu. When the parameters can also be accessed and set from within the configuration menu for the corresponding function, their description is detailed in these menus, on the pages indicated, to aid programming.

Code	Name/Description	Adjustment range	Factory setting
bLC-	**[BRAKE LOGIC CONTROL]** (continued)		
bEt ★	**[Brake engage time]** Brake engage time (brake response time).	0 to 5 s	0.5 s
biP	**[Brake impulse]**		[No] (nO)
nO	☐ [No] (nO): Whilst the brake is releasing, the motor torque direction corresponds to the direction of rotation commanded.		
YES ★	☐ [Yes] (YES): Whilst the brake is releasing, the motor torque direction is forward, regardless of the direction of operation commanded. **Note:** Check that the motor torque direction for "run forward" control corresponds to the upward direction of the load. If necessary, reverse two motor phases.		

★ These parameters only appear if the corresponding function has been selected in another menu. When the parameters can also be accessed and set from within the configuration menu for the corresponding function, their description is detailed in these menus, on the pages indicated, to aid programming.

rEF-
SEt-
drC-
I-O-
CtL-
Fun-
FLt-
CoM-
SuP-

Code	Name/Description	Adjustment range	Factory setting
LC2-	**[CURRENT LIMITATION 2]** Function can only be accessed if [ACCESS LEVEL] (LAC) = [Level 2] (L2) or [Level 3] (L3), page 58.		
LC2	**❑ [Current limit 2]** Selecting the assigned logic input activates the function. ☐ [No] (nO): Not assigned ☐ [LI1] (LI1): Logic input LI1 ☐ [LI2] (LI2): Logic input LI2 ☐ [LI3] (LI3): Logic input LI3 ☐ [LI4] (LI4): Logic input LI4 ☐ [LI5] (LI5): Logic input LI5 ☐ [LI6] (LI6): Logic input LI6 If [ACCESS LEVEL] (LAC) = [Level 3] (L3), the following assignments are possible: ☐ [CD11] (CD11): Bit 11 of the control word from a communication network ☐ [CD12] (CD12): Bit 12 of the control word from a communication network ☐ [CD13] (CD13): Bit 13 of the control word from a communication network ☐ [CD14] (CD14): Bit 14 of the control word from a communication network ☐ [CD15] (CD15): Bit 15 of the control word from a communication network [Current Limitation] (CLI) is enabled when the logic input or control word bit is at state 0 ([SETTINGS] (SEt-) menu, page 38). [I Limit. 2 value] (CL2) is enabled when the logic input or control word bit is at state 1.		[No] (nO)
CL2 ★	**❑ [I Limit. 2 value]** (1) See page 38.	0.25 to 1.5 In (2)	1.5 In (2)

(1) Parameter can also be accessed in the [SETTINGS] (SEt-) menu.
(2) In corresponds to the nominal drive current indicated in the Installation Manual and on the drive nameplate.

★ These parameters only appear if the corresponding function has been selected in another menu. When the parameters can also be accessed and set from within the configuration menu for the corresponding function, their description is detailed in these menus, on the pages indicated, to aid programming.

Code	Name/Description	Adjustment range	Factory setting
CHP-	**[SWITCHING MOTOR]** Function can only be accessed if [ACCESS LEVEL] (LAC) = [Level 2] (L2) or [Level 3] (L3), page 58.		
CHP	**[Motor switching]** ☐ [No] (nO): Not assigned ☐ [LI1] (LI1): Logic input LI1 ☐ [LI2] (LI2): Logic input LI2 ☐ [LI3] (LI3): Logic input LI3 ☐ [LI4] (LI4): Logic input LI4 ☐ [LI5] (LI5): Logic input LI5 ☐ [LI6] (LI6): Logic input LI6 If [ACCESS LEVEL] (LAC) = [Level 3] (L3), the following assignments are possible: ☐ [CD11] (CD11): Bit 11 of the control word from a communication network ☐ [CD12] (CD12): Bit 12 of the control word from a communication network ☐ [CD13] (CD13): Bit 13 of the control word from a communication network ☐ [CD14] (CD14): Bit 14 of the control word from a communication network ☐ [CD15] (CD15): Bit 15 of the control word from a communication network LI or bit = 0: Motor 1 LI or bit = 1: Motor 2 **Note:** • If this function is used, the auto-tuning function, page 43, is not active on motor 2. • Changes to parameters are only taken into account when the drive is locked. **CAUTION** **RISK OF DAMAGE TO MOTOR** The motor switching function disables motor thermal protection. The use of external overload protection is required when using motor switching. **Failure to follow these instructions can result in equipment damage.**		[No] (nO)
UnS2 ★	**[Nom. mot. 2 volt.]** ATV312●●●M2: 100 to 240 V ATV312●●●M3: 100 to 240 V ATV312●●●N4: 100 to 500 V ATV312●●●S6: 100 to 600 V	In accordance with the drive rating	In accordance with the drive rating
FrS2 ★	**[Nom. motor 2 freq.]** **Note:** The ratio [Rated motor volt.] (UnS) (in volts) / [Rated motor freq.] (FrS) (in Hz) must not exceed the following values: ATV312●●●M2: 7 max. ATV312●●●M3: 7 max. ATV312●●●N4: 14 max. ATV312●●●S6: 17 max. The factory setting is 50 Hz, or preset to 60 Hz if [Standard mot. freq] (bFr) is set to 60 Hz.	10 to 500 Hz	50 Hz

★ These parameters only appear if the corresponding function has been selected in another menu. When the parameters can also be accessed and set from within the configuration menu for the corresponding function, their description is detailed in these menus, on the pages indicated, to aid programming.

Code	Name/Description	Adjustment range	Factory setting
CHP-	■ [SWITCHING MOTOR] (continued)		
nCr2 ★	❑ [Nom. mot. 2 current] Nominal motor 2 current given on the rating plate.	0.25 to 1.5 In (2)	In accordance with the drive rating
nSP2 ★	❑ [Nom. mot. 2 speed] 0 to 9,999 rpm then 10.00 to 32.76 krpm If, rather than the nominal speed, the nameplate indicates the synchronous speed and the slip in Hz or as a %, calculate the nominal speed as follows: • Nominal speed = synchronous speed x $\frac{100 - \text{slip as a \%}}{100}$ or • Nominal speed = synchronous speed x $\frac{50 - \text{slip in Hz}}{50}$ (50 Hz motors) or • Nominal speed = synchronous speed x $\frac{60 - \text{slip in Hz}}{60}$ (60 Hz motors)	0 to 32,760 rpm	In accordance with the drive rating
CoS2 ★	❑ [Motor 2 Cosinus Phi] Cos Phi given on the rating plate of motor 2.	0.5 to 1	In accordance with the drive rating
uFt2 ★	❑ [U/F mot.2 selected] L ☐ [Cst. torque] (L): Constant torque for motors connected in parallel or special motors P ☐ [Var. torque] (P): Variable torque for pump and fan applications n ☐ [SVC] (n): Sensorless flux vector control for constant torque applications nLd ☐ [Energy sav.] (nLd): Energy saving, for variable torque applications not requiring high dynamics (behaves in a similar way to the P ratio at no load and the n ratio on load) Voltage 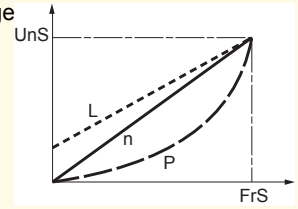 Frequency		[SVC] (n)
uFr2 ★	❑ [IR compensation 2] (1) See page 39.	0 to 100%	20%
FLG2 ★	❑ [FreqLoopGain 2] (1) See page 39.	1 to 100%	20%
StA2 ★	❑ [Freq. loop stability 2] (1) See page 39.	1 to 100%	20%
SLP2 ★	❑ [Slip compensation 2] (1) See page 39.	0 to 150%	100%

(1) Parameter can also be accessed in the [SETTINGS] (SEt-) menu.
(2) In corresponds to the nominal drive current indicated in the Installation Manual and on the drive nameplate.

★ These parameters only appear if the corresponding function has been selected in another menu. When the parameters can also be accessed and set from within the configuration menu for the corresponding function, their description is detailed in these menus, on the pages indicated, to aid programming.

Management of limit switches

Function can only be accessed if [ACCESS LEVEL] (LAC) = [Level 2] (L2) or [Level 3] (L3), page 58.
This function can be used to manage the operation of one or two series limit switches (non-reversing or reversing).

- Assignment of one or two logic inputs (forward limit switch, reverse limit switch)
- Selection of the stop type (on ramp, fast or freewheel)
  Following a stop, the motor is permitted to restart in the opposite direction only.
- The stop is performed when the input is in state 0. The direction of operation is authorized in state 1.

Restarting after stop caused by a limit switch

- Send a run command in the other direction (when control is via the terminals, if [2/3 wire control] (tCC) = [2 wire] (2C) and [2 wire type] (tCt) = [Transition] (trn), first remove all the run commands).

or

- Invert the reference sign, remove all the run commands then send a run command in the same direction as before the stop caused by a limit switch.

Code	Name/Description	Adjustment range	Factory setting
LSt-	**[LIMIT SWITCHES]** Function can only be accessed if [ACCESS LEVEL] (LAC) = [Level 2] (L2) or [Level 3] (L3), page 58. **Note:** This function is incompatible with the "PI regulator" function (see page 21).		
LAF	**[Stop FW limit sw.]**		[No] (nO)
nO	☐ [No] (nO): Not assigned		
LI1	☐ [LI1] (LI1): Logic input LI1		
LI2	☐ [LI2] (LI2): Logic input LI2		
LI3	☐ [LI3] (LI3): Logic input LI3		
LI4	☐ [LI4] (LI4): Logic input LI4		
LI5	☐ [LI5] (LI5): Logic input LI5		
LI6	☐ [LI6] (LI6): Logic input LI6		
LAr ★	**[Stop RV limit sw.]**		[No] (nO)
nO	☐ [No] (nO): Not assigned		
LI1	☐ [LI1] (LI1): Logic input LI1		
LI2	☐ [LI2] (LI2): Logic input LI2		
LI3	☐ [LI3] (LI3): Logic input LI3		
LI4	☐ [LI4] (LI4): Logic input LI4		
LI5	☐ [LI5] (LI5): Logic input LI5		
LI6	☐ [LI6] (LI6): Logic input LI6		
LAS ★	**[Stop type]** Parameter can be accessed if [Stop FW limit sw.] (LAF), page 89, or [Stop RV limit sw.] (LAr), page 89, is assigned.		[Freewheel] (nSt)
rMP	☐ [Ramp stop] (rMP): On ramp		
FSt	☐ [Fast stop] (FSt): Fast stop		
nSt	☐ [Freewheel] (nSt): Freewheel stop		

★ These parameters only appear if the corresponding function has been selected in another menu. When the parameters can also be accessed and set from within the configuration menu for the corresponding function, their description is detailed in these menus, on the pages indicated, to aid programming.

[APPLICATION FUNCT.] (FUn-) menu

Code	Name/Description	Adjustment range	Factory setting
ArE	❏ **[Select ATV31 conf.]** This parameter is invisible if a communication option is present. It is only used to transfer a configuration via a loader tool or an ATV31 remote terminal. [Select ATV31 conf.] (ArE) can be used during a transfer between an ATV31 and ATV312 to specify the type of ATV31 (ATV31 or ATV31●●●●●●A). See page 105 **Configuration transfer between an ATV31 and an ATV312** for more details about compatible loader tools. Note : The transfer can't be done from an ATV31 to an ATV312 with a communication option board		[No] (nO)
nO	☐ [No] (nO): Transfer between two ATV312 **Note1**: PC Software is only compatible with ATV312 using the standard input/output control board. **Note2**: Transfer between 2 drives is only possible if they have the same communication board.		
31E	☐ [ATV31 std] (31E): Transfer from an ATV31 to an ATV312. Set ARE = 31E to download a configuration from a European ATV31.		
31A	☐ [ATV31...A] (31A): Transfer from an ATV31●●●●●●A to an ATV312. Set ARE = 31A to download a configuration from an Asian ATV31. Procedure for transferring a configuration: • Set [Select ATV31 conf.] (ArE) to the required value. • Perform the configuration transfer. • Once the transfer is complete, turn the drive off. • Power the drive up again to initialize the configuration. • The parameter is restored to its factory setting.		
SCS 2 s	❏ **[Saving config.]** See page 45.	(1)	[No] (nO)
CFG 2 s	❏ **[Macro configuration]** See page 45.	(1)	[Factory set.] (Std)
FCS 2 s	❏ **[Restore config.]** See page 46.	(1)	[No] (nO)

(1) [Saving config.] (SCS), [Macro configuration] (CFG), and [Restore config.] (FCS) can be accessed from several configuration menus, but they apply to all menus and parameters.

2 s The jog dial (ENT) needs to be pressed and held down (for 2 s) to change the assignment for this parameter.

[FAULT MANAGEMENT] (FLt-) menu

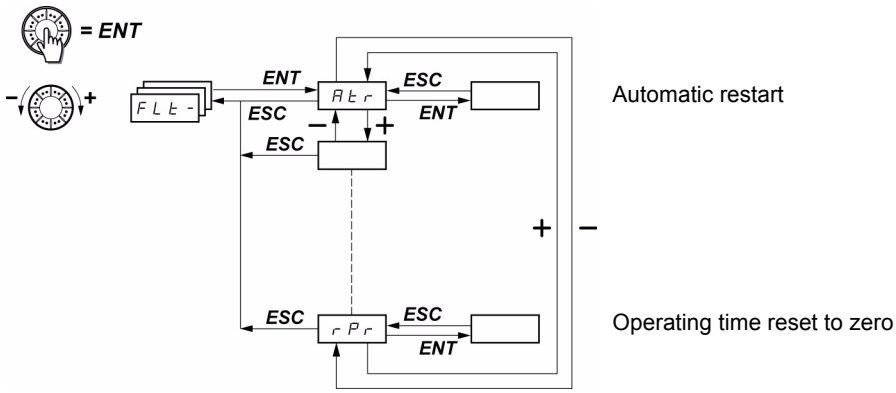

The parameters can only be modified when the drive is stopped and no run command is present.
On the optional remote display terminal, this menu can be accessed with the switch in the position.

Code	Description	Adjustment range	Factory setting
Atr	❑ [Automatic restart]		[No] (nO)

⚠ DANGER

UNINTENDED EQUIPMENT OPERATION

- The automatic restart can only be used on machines or installations which do not pose any danger to either personnel or equipment.
- If the automatic restart is activated, R1 will only indicate a fault has been detected once the time-out period for the restart sequence has expired.
- The equipment must be used in compliance with national and regional safety regulations.

Failure to follow these instructions will result in death or serious injury.

The motor's automatic restart function will only be active in 2-wire level control ([2/3 wire control] (tCC) = [2 wire] (2C), and [2 wire type] (tCt) = [Level] (LEL) or [Fwd priority] (PFO)).

nO ☐ [No] (nO): Function inactive

YES ☐ [Yes] (YES): Automatic restart if the fault has been cleared and the other operating conditions permit the restart. The restart is performed by a series of automatic attempts separated by increasingly longer waiting periods: 1 s, 5 s, 10 s, then 1 min for subsequent ones.
If the restart has not taken place once the [Max. restart time] (tAr) configurable time has elapsed, the procedure is aborted and the drive remains locked until it is turned off and then on again.
This function is possible with the following conditions:
[NETWORK FAULT] (CnF): Communication detected fault on the communication card
[CANopen com.] (COF): CANopen communication detected fault
[External] (EPF): External fault
[4-20mA] (LFF): 4-20 mA loss
[Overbraking] (ObF): DC bus overvoltage
[Drive overheat] (OHF): Drive overheating
[Motor overload] (OLF): Motor overload
[Mot. phase] (OPF): Motor phase loss
[Mains overvoltage] (OSF): Line supply overvoltage
[Mains phase loss] (PHF): Line phase loss
[MODBUS FAULT] (SLF): Modbus communication

Relay R1 remains activated if this function is active. The speed reference and the operating direction must be maintained.

[FAULT MANAGEMENT] (FLt-) menu

Code	Description	Adjustment range	Factory setting
tAr ★ 5 10 30 1h 2h 3h Ct	❑ **[Max. restart time]** Parameter is only visible if [Automatic restart] (Atr) = [Yes] (YES). It can be used to limit the number of consecutive restarts in the event of a recurrent detected fault. ☐ [5 min] (5): 5 minutes ☐ [10 min] (10): 10 minutes ☐ [30 min] (30): 30 minutes ☐ [1 hour] (1h): 1 hour ☐ [2 hours] (2h): 2 hours ☐ [3 hours] (3h): 3 hours ☐ [Unlimited] (Ct): Unlimited (except for [MOTOR PHASE LOSS] (OPF) and [INPUT PHASE LOSS] (PHF); the max. duration of the restart process is limited to 3 hours)		[5 min] (5)
rSF nO LI1 LI2 LI3 LI4 LI5 LI6	❑ **[Fault reset]** ☐ [No] (nO): Not assigned ☐ [LI1] (LI1): Logic input LI1 ☐ [LI2] (LI2): Logic input LI2 ☐ [LI3] (LI3): Logic input LI3 ☐ [LI4] (LI4): Logic input LI4 ☐ [LI5] (LI5): Logic input LI5 ☐ [LI6] (LI6): Logic input LI6		[No] (nO)

★ These parameters only appear if the corresponding function has been selected in another menu. When the parameters can also be accessed and set from within the configuration menu for the corresponding function, their description is detailed in these menus, on the pages indicated, to aid programming.

[FAULT MANAGEMENT] (FLt-) menu

Code	Description	Adjustment range	Factory setting
FLr	**❑ [Catch on the fly]**		[No] (nO)
	Used to enable a smooth restart if the run command is maintained after the following events: - Loss of line supply or simple power off - Reset of current drive or automatic restart - Freewheel stop The speed given by the drive resumes from the estimated speed of the motor at the time of the restart, then follows the ramp to the reference speed. This function requires 2-wire control ([2/3 wire control] (tCC) = [2 wire] (2C)) with [2 wire type] (tCt) = [Level] (LEL) or [Fwd priority] (PFO).		
nO	☐ [No] (nO): Function inactive		
YES	☐ [Yes] (YES): Function active When the function is operational, it activates at each run command, resulting in a slight delay (1 second max.). [Catch on the fly] (FLr) is forced to [No] (nO) if brake control [Brake assignment] (bLC) is assigned, page 84.		
EtF	**❑ [External fault ass.]**		[No] (nO)
nO	☐ [No] (nO): Not assigned		
LI1	☐ [LI1] (LI1): Logic input LI1		
LI2	☐ [LI2] (LI2): Logic input LI2		
LI3	☐ [LI3] (LI3): Logic input LI3		
LI4	☐ [LI4] (LI4): Logic input LI4		
LI5	☐ [LI5] (LI5): Logic input LI5		
LI6	☐ [LI6] (LI6): Logic input LI6		
	If [ACCESS LEVEL] (LAC) = [Level 3] (L3), the following assignments are possible:		
CD11	☐ [CD11] (CD11): Bit 11 of the control word from a communication network		
CD12	☐ [CD12] (CD12): Bit 12 of the control word from a communication network		
CD13	☐ [CD13] (CD13): Bit 13 of the control word from a communication network		
CD14	☐ [CD14] (CD14): Bit 14 of the control word from a communication network		
CD15	☐ [CD15] (CD15): Bit 15 of the control word from a communication network		
LEt	**❑ [External fault config]**		[Active high] (HIG)
LO	☐ [Active low] (LO): The external fault is detected when the logic input assigned to [External fault ass.] (EtF) changes to state 0. **Note:** In this case, [External fault ass.] (EtF) cannot be assigned to a control word bit from a communication network.		
HIG	☐ [Active high] (HIG): The external fault is detected when the logic input or the bit assigned to [External fault ass.] (EtF) changes to state 1. **Note:** Where [External fault config] (LEt) = [Active high] (HIG), [External fault ass.] (EtF) is assigned to a control word bit from a communication network, and where there is no [External fault ass.] (EtF) fault detection, switching to [External fault config] (LEt) = [Active low] (LO) triggers [External fault ass.] (EtF) fault detection. In this case, it is necessary to turn the drive off and then back on again.		
EPL	**❑ [External fault mgt]**		[Freewheel] (YES)
nO	☐ [Ignore] (nO): Ignore		
YES	☐ [Freewheel] (YES): Detected fault management with freewheel stop		
rMP	☐ [Ramp stop] (rMP): Detected fault management with stop on ramp		
FSt	☐ [Fast stop] (FSt): Detected fault management with fast stop		

Code	Description	Adjustment range	Factory setting
oPL	❑ [Output Phase Loss]		[Yes] (YES)

⚠⚠DANGER

HAZARD OF ELECTRIC SHOCK, EXPLOSION, OR ARC FLASH

If **[Output Phase Loss] (OPL)** is set to **nO** loss of cable is not detected
- Check this action will not endanger personnel or equipment in any way

Failure to follow these instructions will result in death or serious injury.

- nO ☐ [No] (nO): Function inactive
- YES ☐ [Yes] (YES): Tripping on the [MOTOR PHASE LOSS] (OPF)
- oAC ☐ [Output cut] (OAC): No tripping on a [MOTOR PHASE LOSS] (OPF), but management of the output voltage in order to avoid an overcurrent when the link with the motor is re-established and catch on the fly performed even if [Catch on the fly] (FLr) = [No] (nO). To be used with output contactor.
  [Output Phase Loss] (OPL) is forced to [Yes] (YES) if [Brake assignment] (bLC) is not set to [No] (nO), page 84.

iPL	❑ [Input phase loss]		[Yes] (YES)

This parameter is only accessible on 3-phase drives.
- nO ☐ [No] (nO): Ignore
- YES ☐ [Yes] (YES): Stop mode when fault detected: freewheel

oHL	❑ [Overtemp fault mgt]		[Freewheel] (YES)

CAUTION

RISK OF DAMAGE TO THE MOTOR

Inhibiting drive overheating fault detection results in the drive not being protected. This invalidates the warranty.
- Check that the possible consequences do not present any risk.

Failure to follow these instructions can result in equipment damage.

- nO ☐ [Ignore] (nO): Ignore
- YES ☐ [Freewheel] (YES): Detected fault management with freewheel stop
- rnP ☐ [Ramp stop] (rMP): Detected fault management with stop on ramp
- FSt ☐ [Fast stop] (FSt): Detected fault management with fast stop

oLL	❑ [Overload fault mgt]		[Freewheel] (YES)

CAUTION

RISK OF DAMAGE TO THE MOTOR

If **[Overload fault mgt]** is set to **nO**, motor thermal protection is no longuer provided by the drive. Provide an alternative means of thermal protection.

Failure to follow these instructions can result in equipment damage.

- nO ☐ [Ignore] (nO): Ignore
- YES ☐ [Freewheel] (YES): Detected fault management with freewheel stop
- rnP ☐ [Ramp stop] (rMP): Detected fault management with stop on ramp
- FSt ☐ [Fast stop] (FSt): Detected fault management with fast stop

[FAULT MANAGEMENT] (FLt-) menu

Code	Description	Adjustment range	Factory setting
SLL	❑ **[Modbus fault mgt]**		[Freewheel] (YES)

⚠ WARNING

LOSS OF CONTROL

If **[Modbus fault mgt] (SLL)** = **[Ignore] (n0)**, communication control will be inhibited. For safety reasons, inhibiting the communication fault detection should be restricted to the debug phase or to special applications.

Failure to follow these instructions can result in death, serious injury, or equipment damage.

- nO: ☐ [Ignore] (nO): Ignore
- YES: ☐ [Freewheel] (YES): Detected fault management with freewheel stop
- rMP: ☐ [Ramp stop] (rMP): Detected fault management with stop on ramp
- FSt: ☐ [Fast stop] (FSt): Detected fault management with fast stop

This parameter does not apply to PC-Software.

Code	Description	Adjustment range	Factory setting
CoL	❑ **[CANopen fault mgt]**		[Freewheel] (YES)

⚠ WARNING

LOSS OF CONTROL

If **[CANopen fault mgt] (COL)** = **[Ignore] (n0)**, communication control will be inhibited. For safety reasons, inhibiting the communication fault detection should be restricted to the debug phase or to special applications.

Failure to follow these instructions can result in death, serious injury, or equipment damage.

- nO: ☐ [Ignore] (nO): Ignore
- YES: ☐ [Freewheel] (YES): Detected fault management with freewheel stop
- rMP: ☐ [Ramp stop] (rMP): Detected fault management with stop on ramp
- FSt: ☐ [Fast stop] (FSt): Detected fault management with fast stop

Code	Description	Adjustment range	Factory setting
tnL	❑ **[Autotune fault mgt]**		[Yes] (YES)

This parameter can be used to manage drive behavior in the event that auto-tuning is unsuccessful [AUTO TUNING FAULT] (tnF)

- nO: ☐ [No] (nO): Ignored (the drive reverts to the factory settings)
- YES: ☐ [Yes] (YES): Detected fault management with drive locked

If [Cold stator resist.] (rSC), page 42, is not set to [No] (nO), [Autotune fault mgt] (tnL) is forced to [Yes] (YES).

Code	Description	Adjustment range	Factory setting
LFL	❑ **[4-20mA loss]**		[Freewheel] (YES)

- nO: ☐ [Ignore] (nO): Ignored (only possible value if [AI3 min. value] (CrL3) ⩽ 3 mA, page 48)
- YES: ☐ [Freewheel] (YES): Detected fault management with freewheel stop
- LFF: ☐ [fallback spd] (LFF): The drive switches to the fallback speed ([fallback spd] (LFF) parameter).
- rLS: ☐ [Spd maint.] (rLS): The drive maintains the speed at which it was operating when the loss was detected. This speed is saved and stored as a reference until the fault has disappeared.
- rMP: ☐ [Ramp stop] (rMP): Detected fault management with stop on ramp
- FSt: ☐ [Fast stop] (FSt): Detected fault management with fast stop

Note: Before setting [4-20mA loss] (LFL) to [fallback spd] (LFF) check the connection of input AI3.
If [4-20mA loss] (LFL) = [fallback spd] (LFF) or [Spd maint.] (rLS), no code is displayed.

Code	Description	Adjustment range	Factory setting
LFF	❑ **[Fallback speed]**	0 to 500 Hz	10 Hz

Fallback speed setting in the event of a [4-20mA loss] (LFL).

Code	Description	Adjustment range	Factory setting
drn 2 s nO YES	❏ **[Derated operation]** Lowers the tripping threshold of [Undervoltage] (USF): in order to operate on line supplies with 50% voltage drops. ☐ [No] (nO): Function inactive ☐ [Yes] (YES): Function active In this case, drive performance is derated. **CAUTION** **RISK OF DAMAGE TO DRIVE** When **[Derated operation] (drn)** = **[Yes] (YES)**, use a line choke (see catalog). **Failure to follow these instructions can result in equipment damage.**		[No] (nO)
StP nO nnS rMP FSt	❏ **[UnderV. prevention]** This function can be used to control the type of stop where there is a loss of line supply. ☐ [No] (nO): Locking of the drive and freewheel stopping of the motor ☐ [DC Maintain] (MMS): This stop mode uses the inertia to maintain the drive power supply as long as possible. ☐ [Ramp stop] (rMP): Stop according to the valid ramp ([Deceleration] (dEC) or [Deceleration 2] (dE2)) ☐ [Fast stop] (FSt): Fast stop, the stopping time depends on the inertia and the braking ability of the drive.		[No] (nO)
inH 2 s nO LI1 LI2 LI3 LI4 LI5 LI6	❏ **[Fault inhibit assign.]** **⚠ DANGER** **LOSS OF PERSONNEL AND EQUIPMENT PROTECTION** • Enabling the fault inhibition parameter **[Fault inhibit assign.] (inH)** will disable the drive controller protection features. • InH should not be enabled for typical applications of this equipment. • InH should be enabled only in extraordinary situations where a thorough risk analysis demonstrates that the presence of adjustable speed drive protection poses a greater risk than personnel injury or equipment damage. **Failure to follow these instructions will result in death or serious injury.** This function disables drive protection for the following detected faults: SLF, CnF, EPF, CrF, LFF, OHF, OBF, OLF, OSF, OPF, PHF, SOF, tnF, COF, bLF ☐ [No] (nO): Not assigned ☐ [LI1] (LI1): Logic input LI1 ☐ [LI2] (LI2): Logic input LI2 ☐ [LI3] (LI3): Logic input LI3 ☐ [LI4] (LI4): Logic input LI4 ☐ [LI5] (LI5): Logic input LI5 ☐ [LI6] (LI6): Logic input LI6 The logic inputs are active in the high state.		[No] (nO)

2 s The jog dial (ENT) needs to be pressed and held down (for 2 s) to change the assignment for this parameter.

Code	Description	Adjustment range	Factory setting
rPr nO rtH	❏ [Operating t. reset] ☐ [No] (nO): No ☐ [rst. runtime] (rtH): Operating time reset to zero The [Operating t. reset] (rPr) parameter automatically returns to [No] (nO) after resetting to 0.		[No] (nO)
rP 2 s nO YES	❏ [Product reset] **⚠ DANGER** **UNINTENDED EQUIPMENT OPERATION** You are going to reset the drive. • Check this action will not endanger personnel or equipment in any way. **Failure to follow these instructions will result in death or serious injury.** ☐ [No] (nO): No ☐ [Yes] (YES): Yes		[No] (nO)

2 s The jog dial (ENT) needs to be pressed and held down (for 2 s) to change the assignment for this parameter.

[COMMUNICATION] (COM-) menu

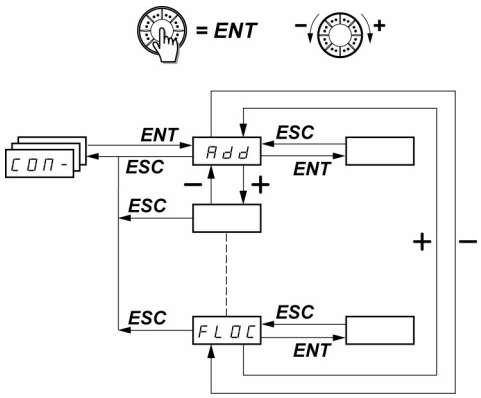

The parameters can only be modified when the drive is stopped and no run command is present. Modifications to the [Modbus Address] (Add), [Modbus baud rate] (tbr), [Modbus format] (tFO), [CANopen address] (AdCO), and [CANopen bit rate] (bdCO) parameters are not taken into account until the drive has been switched off and back on again.
On the optional ATV31 remote display terminal, this menu can be accessed with the switch in the position.

Code	Description	Adjustment range	Factory setting
Add	❑ **[Modbus Address]** Modbus address for the drive.	1 to 247	1
tbr	❑ **[Modbus baud rate]** Modbus transmission speed		19,200 bps
4.8	☐ [4.8 Kbps] (4.8): 4,800 bits/second		
9.6	☐ [9.6 Kbps] (9.6): 9,600 bits/second		
19.2	☐ [19.2 Kbps] (19.2): 19,200 bits/second (**Note:** This is the only value which supports the use of the remote display terminal.)		
tFo	❑ **[Modbus format]**		[8-E-1] (8E1)
8o1	☐ [8-O-1] (8O1): 8 data bits, odd parity, 1 stop bit		
8E1	☐ [8-E-1] (8E1): 8 data bits, even parity, 1 stop bit (**Note:** This is the only value which supports the use of the remote display terminal.)		
8n1	☐ [8-N-1] (8n2): 8 data bits, no parity, 1 stop bit		
8n2	☐ [8-N-2] (8n2): 8 data bits, no parity, 2 stop bits		
tto	❑ **[Modbus time out]**	0.1 to 30 s	10 s
AdCo	❑ **[CANopen address]** CANopen address for the drive.	0 to 127	0
bdCo	❑ **[CANopen bit rate]** Modbus transmission speed		125 bps
10.0	☐ [10 kbps] (10.0): 10 kbps		
20.0	☐ [20 kbps] (20.0): 20 kbps		
50.0	☐ [50 kbps] (50.0): 50 kbps		
125.0	☐ [125 kbps] (125.0): 125 kbps		
250.0	☐ [250 kbps] (250.0): 250 kbps		
500.0	☐ [500 kbps] (500.0): 500 kbps		
1000	☐ [1 Mbps] (1000): 1000 kbps		
ErCo	❑ **[Error code]**		-
0	☐ No error		
1	☐ Bus off		
2	☐ Life time		
3	☐ CAN overrun		
4	☐ Heartbeat		

[COMMUNICATION] (COM-) menu

Code	Description	Adjustment range	Factory setting
FLo	❑ **[Forced local assign.]**		[No] (nO)
nO	☐ [No] (nO): Not assigned		
LI1	☐ [LI1] (LI1): Logic input LI1		
LI2	☐ [LI2] (LI2): Logic input LI2		
LI3	☐ [LI3] (LI3): Logic input LI3		
LI4	☐ [LI4] (LI4): Logic input LI4		
LI5	☐ [LI5] (LI5): Logic input LI5		
LI6	☐ [LI6] (LI6): Logic input LI6		
	In forced local mode, the terminals and the display terminal regain control of the drive.		
FLoC	❑ **[Forced local Ref.]**		[AI1] (AI1)
★	Parameter can only be accessed if [ACCESS LEVEL] (LAC) = [Level 3] (L3), page 58. In forced local mode, only the speed reference is taken into account. PI functions, summing inputs, etc. are not active. See the diagrams on pages 55 to 57.		
AI1	☐ [AI1] (AI1): Analog input AI1, logic inputs LI		
AI2	☐ [AI2] (AI2): Analog input AI2, logic inputs LI		
AI3	☐ [AI3] (AI3): Analog input AI3, logic inputs LI		
AIU1	☐ [AI Virtual 1] (AIV1): Jog dial, RUN/STOP buttons		
LCC	☐ [HMI] (HMI): Remote display terminal: [HMI Frequency ref.] (LFr) reference, page 32, RUN/STOP/FWD/REV buttons		

★ These parameters only appear if the corresponding function has been selected in another menu. When the parameters can also be accessed and set from within the configuration menu for the corresponding function, their description is detailed in these menus, on the pages indicated, to aid programming.

[MONITORING] (SUP-) menu

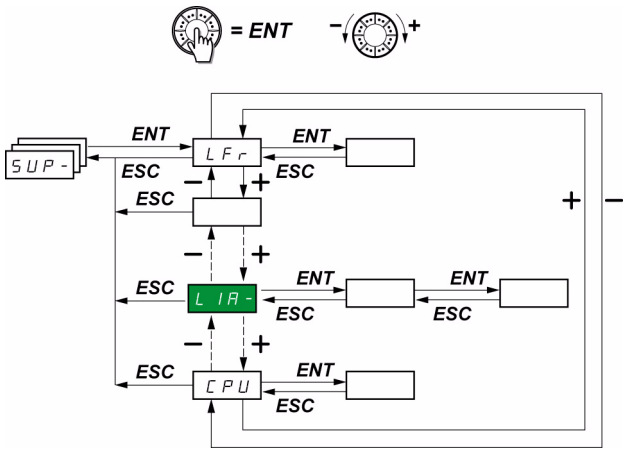

Submenu

The parameters can be accessed with the drive running or stopped.
On the optional remote display terminal, this menu can be accessed with the switch in any position.

Some functions have numerous parameters. In order to clarify programming and avoid having to scroll through endless parameters, these functions have been grouped in submenus.
Like menus, submenus are identified by a dash after their code: LIA- for example.

When the drive is running, the value displayed is that of one of the monitoring parameters. By default, the value displayed is the output frequency applied to the motor ([Output frequency] (rFr) parameter).
While the value of the new monitoring parameter required is being displayed, press and hold down the jog dial (ENT) again (for 2 seconds) to confirm the change of monitoring parameter and store it. From then on, it is the value of this parameter that will be displayed during operation (even after powering down).
"Unless the new choice is confirmed by pressing and holding down ENT again, the display will revert to the previous parameter after powering down.

Note: After the drive has been turned off or following a loss of line supply, the parameter displayed is the drive status ([Ready] (rdY), for example).
The selected parameter is displayed following a run command.

[MONITORING] (SUP-) menu

Code	Description	Variation range
LFr ★	❑ **[HMI Frequency ref.]** Frequency reference for control via built-in display terminal or remote display terminal.	0 to 500 Hz
rPI ★	❑ **[Internal PID ref.]** Internal PID reference Parameter is only visible if [PID feedback ass.] (PIF) is not set to [No] (nO), page 80.	0 to 100%
FrH	❑ **[Frequency ref.]** Frequency reference before ramp (absolute value).	0 to 500 Hz
rFr	❑ **[Output frequency]** This parameter is also used for the +/- speed function using the jog dial on the keypad or display terminal. It displays and validates operation (see page 58). In the event of a loss of line supply, [Output frequency] (rFr) is not stored and the +/- speed function must be re-enabled in [MONITORING] (SUP-) and [Output frequency] (rFr).	- 500 Hz to + 500 Hz
SPd1 or SPd2 or SPd3	❑ **[Cust. output value]** [Cust. output value] (SPd1), [Cust. output value] (SPd2) or [Cust. output value] (SPd3) depending on the [Scale factor display] (SdS) parameter, page 40 ([Cust. output value] (SPd3) in the factory setting)	
LCr	❑ **[Motor current]** Estimation of current in the motor	
oPr	❑ **[Motor power]** 100% = nominal motor power, calculated using the parameters entered in the [MOTOR CONTROL] (drC-) menu	
uLn	❑ **[Mains voltage]** This parameter gives the line voltage via the DC bus, both in motor mode or when the motor is stopped.	
tHr	❑ **[Motor thermal state]** 100% = nominal thermal state 118% = "OLF" threshold (drive overload)	
tHd	❑ **[Drv. Therm att.]** 100% = nominal thermal state 118% = "OHF" threshold (drive overheating)	

★ These parameters only appear if the corresponding function has been selected in another menu. When the parameters can also be accessed and set from within the configuration menu for the corresponding function, their description is detailed in these menus, on the pages indicated, to aid programming.

[MONITORING] (SUP-) menu

rEF-
SEt-
drC-
I-O-
CtL-
Fun-
FLt-
CoM-
SuP-

Code	Description	Variation range
LFt	❑ [Last fault occurred]	
bLF	☐ [Brake control] (bLF): Brake control detected fault	
CFF	☐ [Incorrect config.] (CFF): Incorrect configuration (parameters)	
CFI	☐ [Invalid config.] (CFI): Invalid configuration (parameters)	
CnF	☐ [NETWORK FAULT] (CnF): Communication detected fault on the communication card	
CoF	☐ [CANopen com.] (COF): Communication detected fault line 2 (CANopen)	
CrF	☐ [Capa.charg] (CrF): Capacitor precharge detected fault	
EEF	☐ [EEPROM] (EEF): EEPROM memory detected fault	
EPF	☐ [External] (EPF): External fault	
ILF	☐ [internal com. link] (ILF): Option internal link detected fault	
IF1	☐ [INTERNAL FAULT] (IF1): Unknown rating	
IF2	☐ [INTERNAL FAULT] (IF2): HMI card not recognized or incompatible/display absent	
IF3	☐ [INTERNAL FAULT] (IF3): EEPROM detected fault	
IF4	☐ [INTERNAL FAULT] (IF4): Industrial EEPROM detected fault	
LFF	☐ [4-20mA] (LFF): 4-20 mA loss	
nOF	☐ [No fault] (nOF): No fault code saved	
obF	☐ [Overbraking] (ObF): DC bus overvoltage	
oCF	☐ [Overcurrent] (OCF): Overcurrent	
oHF	☐ [Drive overheat] (OHF): Drive overheating	
oLF	☐ [Motor overload] (OLF): Motor overload	
oPF	☐ [Mot. phase] (OPF): Motor phase loss	
oSF	☐ [Mains overvoltage] (OSF): Line supply overvoltage	
PHF	☐ [Mains phase loss] (PHF): Line phase loss	
SCF	☐ [Mot. short circuit] (SCF): Motor short-circuit (phase, ground)	
SLF	☐ [Modbus] (SLF): Modbus communication detected fault	
SOF	☐ [Overspeed] (SOF): Motor overspeed	
tnF	☐ [Auto-tuning] (tnF): Auto-tuning detected fault	
USF	☐ [Undervoltage] (USF): Line supply undervoltage	
otr	❑ [Motor torque] 100% = nominal motor torque, calculated using the parameters entered in the [MOTOR CONTROL] (drC-) menu.	
rtH	❑ [Run time] Total time the motor has been powered up: 0 to 9,999 (hours), then 10.00 to 65.53 (kilo-hours). Can be reset to zero by the [Operating t. reset] (rPr) parameter in the [FAULT MANAGEMENT] (FLt-) menu, page 97.	0 to 65,530 hours

Code	Description	Variation range
CodE	❏ **[PIN code 1]** Enables the drive configuration to be protected using an access code. When access is locked by means of a code, only the parameters in the [MONITORING] (SUP-) and [SPEED REFERENCE] (rEF-) menus can be accessed. The MODE button can be used to switch between menus. **Note: Before entering a code, do not forget to make a careful note of it.** OFF ☐ [OFF] (OFF): No access locking codes • To lock access, enter a code (2 to 9,999). The display can be incremented using the jog dial. Then press ENT. [ON] (On) appears on the screen to indicate that access has been locked. On ☐ [ON] (On): A code is locking access (2 to 9,999). • **To unlock access**, enter the code (incrementing the display using the jog dial) and press ENT. The code remains on the display and access is unlocked until the next time the drive is turned off. Access will be locked again the next time the drive is turned on. • **If an incorrect code is entered**, the display changes to [ON] (On), and access remains locked. 8888 ☐ Access is unlocked (the code remains on the screen). • **To reactivate locking with the same code** when access has been unlocked, return to [ON] (On) using the jog dial and then press ENT. [ON] (On) remains on the screen to indicate that access has been locked. • **To lock access with a new code** when access has been unlocked, enter the new code (increment the display using the jog dial) and then press ENT. On appears on the screen to indicate that access has been locked. • **To clear locking** when access has been unlocked, return to [OFF] (OFF) using the jog dial and then press ENT. [OFF] (OFF) remains on the display. Access is unlocked and will remain so until the next restart.	
tUS	❏ **[Auto tuning state]** tAb ☐ [Not done] (tAb): The default stator resistance value is used to control the motor. PEnd ☐ [Pending] (PEnd): Auto-tuning has been requested but not yet performed. PrOG ☐ [In Progress] (PrOG): Auto-tuning in progress. FAIL ☐ [Failed] (FAIL): Auto-tuning was unsuccessful. donE ☐ [Done] (dOnE): The stator resistance measured by the auto-tuning function is used to control the motor. Strd ☐ [Entered R1] (Strd): The cold state stator resistance ([Cold stator resist.] (rSC) which is not set to [No] (nO)) is used to control the motor. CUS ☐ [Customized] (CUS): The value of [Cold stator resist.] (rSC), page 43 is set manually.	
UdP	❏ **[Drv.Soft.Ver]** This parameter gives the software version for the drive. Example: 1102 = V1.1 IE02	
oICt	❏ **[OPT1 card type]** This parameter is only visible if an option card is present. It is used to visualize the name of the option currently present. no No card, CANopen card or DaisyChain card (these cards are unable to send their names to the ATV312) dnt DeviceNet card PbS Profibus card	
CnF	❏ **[Network fault]** Option card fault code This parameter is read-only and is only visible if an option card is present. The fault code remains saved in the parameter, even if the cause disappears. The parameter is reset after the drive is disconnected and then reconnected. The values of this parameter depend on the network card. Consult the manual for the corresponding card.	

Code	Name/Description	Adjustment range	Factory setting
L IA-	**[LOGIC INPUT CONF.]**		
L I1A L I2A L I3A L I4A L I5A L I6A	Can be used to display the functions assigned to each input. If no functions have been assigned, [No] (nO) is displayed. The jog dial can be used to scroll through all the functions. If a number of functions have been assigned to the same input, check that they are compatible.		
L IS	Can be used to display the state of logic inputs (display segment assignment: high = 1, low = 0) State 1 State 0 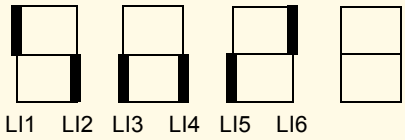 LI1 LI2 LI3 LI4 LI5 LI6 Example above: LI1 and LI6 are at 1; LI2 to LI5 are at 0.		
A IA-	**[ANALOG INPUTS IMAGE]**		
A I1A A I2A A I3A	Can be used to display the functions assigned to each input. If no functions have been assigned, [No] (nO) is displayed. The jog dial can be used to scroll through all the functions. If a number of functions have been assigned to the same input, check that they are compatible.		

Migration ATV31 - ATV312

The ATV312 is compatible with the ATV31.
To retrieve the configuration of the ATV31, simply transfer the configuration from the ATV31 to the ATV312. See below **Configuration transfer between an ATV31 and an ATV312**

Dimensions

For all sizes, the ATV312 is 6 mm less deep than the ATV31●●●●●●A.

Replacing an ATV31●●●●●●A with an ATV312

Note: Position of the logic input switch
On the ATV31●●●●●●A, the logic input switch was set to "**Sink**" in the factory setting.
On the ATV312, it is set to "**Source**" in the factory setting.
Set the switch to match the setting on the product being replaced. For more information, see the "Control terminals" chapter in the Installation Manual.

Note: Position of the IT jumper
There was no integrated EMC filter on the ATV31●●●●●●A. For details on how to deactivate the integrated EMC filter on the ATV312, see the "Operation with IT connection" chapter in the Installation Manual.

ATV312 used in LOCAL configuration (see page 27) uses the Jog Dial as a potentiometer and RUN button is activated. This is a similar way of working than ATV31●●●●●●A. When the drive is powered up for the first time, the two parameters shown below appear after [Standard mot. freq] (bFr). They need to be set as follows:
[Ref.1 channel] (Fr1), page 29, to [AI Virtual 1] (AIV1)
[2/3 wire control] (tCC), page 30, to [Local] (LOC)

The following parameters can be used subsequently to return to the other HMI version:
[Ref.1 channel] (Fr1) in the [COMMAND] (CtL-) menu
[2/3 wire control] (tCC) in the [INPUTS / OUTPUTS CFG] (I-O-) menu

Factory settings
As well as the differences in terms of control by potentiometer, the following differences apply between the factory settings for the ATV31●●●●●●A and those of the ATV312:

Parameter	ATV31●●●●●●A	ATV312
[2/3 wire control] (tCC)	Local control LOC	[2 wire] (2C)
[Ref.1 channel] (Fr1)	Analog input AIP	AI1
[Cmd channel 1] (Cd1)	Local control LOC	tEr
[Reverse assign.] (rrS)	[No] (nO) (if [2/3 wire control] (tCC) = [Local] (LOC))	LI2
[Forced local Ref.] (FLOC)	AIP jog dial	AIU1
[Select ATV31 conf.] (ArE)	Parameter does not exist on the ATV31	[No] (nO)

Configuration transfer between an ATV31 and an ATV312 (using the ATV31 remote terminal or a loader tool)

Compatible loader tools are :
- Multi-Loader V1.10 and higher,
- Simple-Loader V1.3 and higher,
- SoMove V1.1.11.1 and higher,
- SoMove Mobile V2.0 and higher,
- PC software.

Note: The transfer can't be done from an ATV31 to an ATV312 with a communication option board.

A new [Select ATV31 conf.] (ArE) parameter has been added to the [APPLICATION FUNCT.] (FUn-) menu.
It can be used to specify the ATV31 type (ATV31 or ATV31●●●●●●A) during transfers between an ATV31 and ATV312.

Values of the [Select ATV31 conf.] (ArE) parameter:
- [No] (nO), factory setting, transfer between two ATV312
- [ATV31...A] (31A), transfer from ATV31●●●●●●A to ATV312
- [ATV31 std] (31E), transfer from ATV31 to ATV312

To perform a configuration transfer, see the procedure on page 90.

Drive does not start, no code displayed

- If the display does not light up, check the power supply to the drive and check the wiring of inputs AI1 and AI2 and the connection to the RJ45 connector.
- The assignment of the "Fast stop" or "Freewheel stop" functions will prevent the drive from starting if the corresponding logic inputs are not powered up. The ATV312 then displays [Freewheel stop] (nSt) or [Fast stop] (FSt). This is normal since these functions are active at zero so that the drive will be stopped if there is a wire break.
- Check that the run command input(s) have been actuated in accordance with the chosen control mode (the [2/3 wire control] (tCC) parameter in the [INPUTS / OUTPUTS CFG] (I-O-) menu, page 47).
- If an input is assigned to the limit switch function and this input is at zero, the drive can only be started up by sending a command for the opposite direction (see page 89).
- If the reference channel (page 53) or the control channel (page 54) is assigned to a communication network, when the power supply is connected, the drive will display [Freewheel stop] (nSt) and remain in stop mode until the communication bus sends a command.
- If the LED on the DC bus is lit and nothing appears on the display, check that there is no short-circuit on the 10 V power supply.
- If the drive displays [Ready] (rdy) and refuses to start, check that there is no short-circuit on the 10 V power supply and check the wiring of inputs AI1 and AI2 and the connection to the RJ45 connector.
- In the factory setting, the "RUN" button is inactive. Set the [Ref.1 channel] (Fr1) parameter, page 29 , and the [Cmd channel 1] (Cd1) parameter, page 59, to control the drive locally.

Fault detection codes which require a power reset after the fault is cleared

The cause of the fault must be removed before resetting by cycling power to the drive.
[PRECHARGE FAULT] (CrF), [OVERSPEED] (SOF), [AUTO-TUNING FAULT] (tnF), and [BRAKE CONTROL FAULT] (bLF) can also be reset remotely using a logic input (the [Fault reset] (rSF) parameter in the [FAULT MANAGEMENT] (FLt-) menu, page 92).

Code	Name	Probable cause	Remedy
bLF	[BRAKE CONTROL FAULT]	• Brake release current not reached • Brake engage frequency threshold [Brake engage freq] (bEn) = [No] (nO) (not set) whereas the brake control [Brake assignment] (bLC) is assigned • Loss of one phase at drive output • Output contactor open	• Check the drive/motor connection. • Check the motor windings. • Check the [Brake release I FW] (Ibr) setting in the [APPLICATION FUNCT.] (FUn-) menu, page 84. • Apply the recommended settings for [Brake engage freq] (bEn), pages 83 and 84.
CrF	[PRECHARGE FAULT]	• Precharge relay control or damaged precharge resistor	• Replace the drive.
EEF	[EEPROM FAULT]	• Internal memory	• Check the environment (electromagnetic compatibility) • Replace the drive.
iF1	[INTERNAL FAULT]	• Unknown rating	• Replace the drive. • Restart the drive. • Contact a Schneider Electric representative.
iF2	[INTERNAL FAULT]	• HMI card not recognized • HMI card incompatible • No display present	
iF3	[INTERNAL FAULT]	• EEPROM	
iF4	[INTERNAL FAULT]	• Industrial EEPROM	

Fault detection codes which require a power reset after the fault is cleared (continued)

Code	Name	Probable cause	Remedy
oCF oA.CF oAC.F	[OVERCURRENT]	• Parameters in the [SETTINGS] (SEt-) and [MOTOR CONTROL] (drC-) menus are incorrect. • Inertia or load too high • Mechanical locking • Phase/Ground Motor short-circuit • Impedant short-circuit	• Check the parameters in [SETTINGS] (SEt-), page 32, and [MOTOR CONTROL] (drC-) page 41 • Check the size of the motor/drive/load • Check the state of the mechanism
SCF	[MOTOR SHORT CIRCUIT]	• Short-circuit at the drive output • Significant ground leakage current at the drive output if several motors are connected in parallel • Grounding at the drive output	• Check the cables connecting the drive to the motor, and the motor insulation. • Reduce the switching frequency • Connect chokes in series with the motor
SOF	[OVERSPEED]	• Instability or • Driving load too high	• Check the motor, gain and stability parameters • Add a braking resistor • Check the size of the motor/drive/load

Fault detection codes that can be reset with the automatic restart function after the cause has disappeared

See the [Automatic restart] (Atr) function, page 91.
These detected faults can also be reset by turning the drive off then on again or by means of a logic input (the [Fault reset] (rSF) parameter, page 92, in the [FAULT MANAGEMENT] (FLt-) menu, page 91).

Code	Name	Probable cause	Remedy
CnF	[NETWORK FAULT]	• Communication detected fault on the communication card	• Check the environment (electromagnetic compatibility) • Check the wiring. • Check the time out. • Replace the option card. • See the [CANopen fault mgt] (COL) parameter page 95 to define the stop mode with a (CnF).
CoF	[CANopen FAULT]	• Interruption in communication on the CANopen bus	• Check the communication bus • Refer to the relevant product documentation.
EPF	[EXTERNAL FAULT]	• Depending on user	• Depending on user
ILF	[INTERNAL LINK FAULT]	• Identification detected fault of the communication card by the drive	• Check that the option card is compatible with the drive • Replace the option card.
LFF	[4-20mA LOSS]	• Loss of the 4-20 mA reference on input AI3	• Check the connection on input AI3.
obF	[OVERBRAKING]	• Braking too sudden or driving load	• Increase the deceleration time • Install a braking resistor if necessary. • Activate the [Dec ramp adapt.] (bra) function, page 64, if it is compatible with the application.
oHF	[DRIVE OVERHEAT]	• Drive temperature too high	• Check the motor load, the drive ventilation and the environment. Wait for the drive to cool before restarting.

Fault detection codes that can be reset with the automatic restart function after the cause has disappeared (continued)

Code	Name	Probable cause	Remedy
oLF	[MOTOR OVERLOAD]	• Triggered by excessive motor current • [Cold stator resist.] (rSC) parameter value incorrect	• Check the [Mot. therm. current] (ItH) setting, page 33, of the motor thermal protection, check the motor load. Wait for the drive to cool before restarting. • Remeasure [Cold stator resist.] (rSC), page 42.
oPF	[MOTOR PHASE LOSS]	• Loss of one phase at drive output • Output contactor open • Motor not connected or motor power too low • Instantaneous instability in the motor current	• Check the connections from the drive to the motor. • If an output contactor is being used, set [Output Phase Loss] (OPL) to [Output cut] (OAC) ([FAULT MANAGEMENT] (FLt-) menu, page 94). • Test on a low-power motor or without a motor: In factory settings mode, motor output phase loss detection is active ([Output Phase Loss] (OPL) = [Yes] (YES)). To check the drive in a test or maintenance environment without having to switch to a motor with the same rating as the drive (particularly useful in the case of high-power drives), deactivate motor phase loss detection ([Output Phase Loss] (OPL) = [No] (nO)). • Check and optimize the [IR compensation] (UFr), [Rated motor volt.] (UnS), and [Rated mot. current] (nCr) parameters, and perform an [Auto tuning] (tUn) operation, page 43.
oSF	[MAINS OVERVOLTAGE]	• Line voltage is too high. • Disturbed line supply	• Check the line voltage.
PHF	[INPUT PHASE LOSS]	• Drive incorrectly supplied or a fuse blown • Failure of one phase • Three-phase ATV312 used on a single-phase line supply • Unbalanced load This protection only operates with the drive on load	• Check the power connection and the fuses. • Reset • Use a three-phase line supply. • Disable the detection by setting [Input phase loss] (IPL) = [No] (nO) ([FAULT MANAGEMENT] (FLt-) menu, page 94).
SLF	[MODBUS FAULT]	• Interruption in communication on the Modbus bus • Remote display terminal enabled ([HMI command] (LCC) = [Yes] (YES), page 61) and terminal disconnected.	• Check the communication bus • Refer to the relevant product documentation. • Check the link with the remote display terminal.
tnF	[AUTO TUNING FAULT]	• Special motor or motor whose power is not suitable for the drive • Motor not connected to the drive	• Use the L ratio or the [Var. torque] (P) ratio (see [U/F mot 1 selected] (UFt), page 44). • Check that the motor is present during auto-tuning. • If an output contactor is being used, close it during auto-tuning.

Fault detection codes that are reset as soon as their cause disappears

Code	Name	Probable cause	Remedy
CFF	[INCORRECT CONFIG.]	• The current configuration is inconsistent. • Addition or removal of an option	• Return to factory settings or retrieve the backup configuration, if it is valid. See the [Restore config.] (FCS) parameter, page 46.
CFI	[INVALID CONFIG]	• Invalid configuration The configuration loaded in the drive via the serial link is inconsistent	• Check the configuration loaded previously. • Load a consistent configuration.
USF	[UNDERVOLTAGE]	• Insufficient line supply • Transient voltage dip • Damaged precharge resistor	• Check the voltage and the voltage parameter. Tripping threshold in [UNDERVOLTAGE] (USF) ATV312●●●●M2: 160 V ATV312●●●●M3: 160 V ATV312●●●●N4: 300 V ATV312●●●●S6: 430 V • Replace the drive.

Fault detection codes displayed on the ATV12 remote display terminal

Code	Name	Description
init	Initialization in progress	• The microcontroller is initializing. • Search underway for communication configuration
CoM.E (1)	Communication error	• Time out detected fault (50 ms) • This message is displayed after 20 attempts at communication.
A - 17 (1)	Alarm button	• A button has been held down for more than 10 seconds. • The keypad is disconnected. • The "keypad" wakes up when a button is pressed.
clr (1)	Confirmation of detected fault reset	• This is displayed when the STOP button is pressed once during a remote terminal detected fault.
dEu.E (1)	Drive disparity	• The drive brand does not match that of the remote terminal.
roM.E (1)	ROM anomaly	• The remote terminal detects a ROM anomaly on the basis of checksum calculation.
rAM.E (1)	RAM anomaly	• The remote terminal detects a RAM anomaly.
CPu.E (1)	Other detected faults	• Other detected faults

(1) Flashing

Index of functions

[+/- SPEED]	76
[2/3 wire control]	47
[ACCESS LEVEL]	58
[Analog./logic output]	48
[Auto DC injection]	68
[Automatic restart]	91
[Auto tuning]	43
Brake control	83
[CANopen address]	98
[Catch on the fly]	93
[Cmd switching]	60
Control and reference channels	50
[Current limit 2]	86
[Current Limitation]	38
[DC injection assign.]	66
[Dec ramp adapt.]	64
Drive thermal protection	12
Drive ventilation	12
[Fast stop]	65
[Fault reset]	92
[Forced local assign.]	99
[Freewheel stop ass.]	67
[JOG]	75
Management of limit switches	89
[Modbus Address]	98
[Mot. therm. current]	33
Motor thermal protection	13
PI regulator	78
Preset speeds	71
[R1 Assignment]	49
[R2 Assignment]	49
[RAMPS]	62
[Ramp switch ass.]	64
[Ref. 2 switching]	59
Return to factory settings/Restore configuration	46
Saving the configuration	45
[Skip Frequency]	36
[STOP MODES](continued)	65
[SUMMING INPUTS]	70
[Switching freq.]	40
[SWITCHING MOTOR]	87
[U/F mot 1 selected]	44

Index of parameter codes and customer settings

Code	Page	Name	Unit	Value/Possible function		Factory setting	Customer setting
AC2	32 64	[Acceleration 2]	s	In accordance with inr	-	5	
ACC	32 63	[Acceleration]	s	In accordance with inr	-	3	
AdC	68	[Auto DC injection]	-	no YES Ct	[No]: No injection [Yes]: Standstill injection for adjustable period [Continuous]: Continuous standstill injection	YES	
AdCo	98	[CANopen address]	-	0 to 127	-	0	
Add	98	[Modbus Address]	-	1 to 247	-	1	
AI1A	104	[AI1 assignment]	-	-	-	-	
AI2A	104	[AI2 assignment]	-	-	-	-	
AI3A	104	[AI3 assignment]	-	-	-	-	
AIuI	31	[Image input AIV1]	%	0 to 100	-	-	
AoIt	48	[AO1 Type]	-	0A 4A 10u	[Current]: Configuration 0 - 20 mA [Cur. 4-20]: Configuration 4 - 20 mA [Voltage]: Configuration 0 - 10 V	0	
ArE	90	[Select ATV31 conf.]		no 31A 31E	[No]: Transfer between two ATV312 [ATV31...A]: Transfer from an ATV31●●●●●●A to an ATV312 [ATV31 std] : Transfer from an ATV31 to an ATV312	no	
Atr	91	[Automatic restart]	-	no YES	[No]: Function inactive [Yes]: Automatic restart	no	
bdCo	98	[CANopen bit rate]	kbps	10.0 20.0 50.0 125.0 250.0 500.0 1000	[10 kbps]: 10 kbps [20 kbps]: 20 kbps [50 kbps]: 50 kbps [125 kbps]: 125 kbps [250 kbps]: 250 kbps [500 kbps]: 500 kbps [1 Mbps]: 1000 kbps	125.0	
bEn	84	[Brake engage freq]	-	no 0 to LSP	Not set Adjustment range in Hz	no	
bEt	85	[Brake engage time]	s	0 to 5	-	0.5	
bFr	29 41	[Standard mot. freq]	Hz	50 60	[50Hz IEC] [60Hz NEMA]	50	
bIP	85	[Brake impulse]	-	no YES	[No]: Motor torque during brake release in the direction of rotation requested [Yes]: Motor torque during brake release in forward rotation	no	
bLC	84	[Brake assignment]	-	no r2 do	[No]: Not assigned [R2]: Relay R2 [DO]: Logic output AOC	no	
brA	64	[Dec ramp adapt.]	-	no YES	[No]: Function inactive [Yes]: Function active	YES	
brL	84	[Brake release freq]	Hz	0.0 to 10.0	-	In accordance with the drive rating	
brt	84	[Brake Release time]	s	0 to 5	-	0.5	

Index of parameter codes and customer settings

Code	Page	Name	Unit	Value/Possible function		Factory setting	Customer setting
CCS	60	[Cmd switching]	-	Cd1 Cd2 LI1 LI2 LI3 LI4 LI5 LI6 C111 C112 C113 C114 C115 C211 C212 C213 C214 C215	[ch1 active] : Control channel = channel 1 [ch2 active] : Control channel = channel 2 [LI1]: Logic input LI1 [LI2]: Logic input LI2 [LI3]: Logic input LI3 [LI4]: Logic input LI4 [LI5]: Logic input LI5 [LI6]: Logic input LI6 [C111]: Bit 11 of Modbus control word [C112]: Bit 12 of Modbus control word [C113]: Bit 13 of Modbus control word [C114]: Bit 14 of Modbus control word [C115]: Bit 15 of Modbus control word [C211]: Bit 11 of network control word [C212]: Bit 12 of network control word [C213]: Bit 13 of network control word [C214]: Bit 14 of network control word [C215]: Bit 15 of network control word	Cd1	
Cd1	59	[Cmd channel 1]	-	tEr LoC LCC Mdb nEt	[Terminal]: Control via terminals [Local]: Control via keypad [Remot. HMI]: Control via remote display terminal [Modbus]: Control via Modbus [Network]: Control via the network	tEr	
Cd2	60	[Cmd channel 2]	-	tEr LoC LCC Mdb nEt	[Terminal]: Control via terminals [Local]: Control via keypad [Remot. HMI]: Control via remote display terminal [Modbus]: Control via Modbus [Network]: Control via the network	Mdb	
CFG	45 49 61 90	[Macro configuration]	-	StS Std	[Start/Stop]: Start/stop configuration [Factory set.]: Factory configuration	Std	
CHCF	59	[Profile]	-	SIM SEP	[Not separ.]: Combined [Separate]: Separate	SIM	
CHP	87	[Motor switching]	-	no LI1 LI2 LI3 LI4 LI5 LI6 CD11 CD12 CD13 CD14 CD15	[No]: Not assigned [LI1]: Logic input LI1 [LI2]: Logic input LI2 [LI3]: Logic input LI3 [LI4]: Logic input LI4 [LI5]: Logic input LI5 [LI6]: Logic input LI6 [CD11]: Bit 11 of the control word from a communication network [CD12]: Bit 12 of the control word from a communication network [CD13]: Bit 13 of the control word from a communication network [CD14]: Bit 14 of the control word from a communication network [CD15]: Bit 15 of the control word from a communication network	no	
CLI	38	[Current Limitation]	In	0.25 to 1.5	-	1.5	
CL2	38 86	[I Limit. 2 value]	In	0.25 to 1.5	-	1.5	
CnF	103	[Network fault]	-	-	-	-	
Cod	103	[PIN code 1]	-	OFF on 8888	[OFF]: No code is locking access [ON]: A code is locking access. Access is unlocked.	-	

Index of parameter codes and customer settings

Code	Page	Name	Unit	Value/Possible function		Factory setting	Customer setting
CoL	95	[CANopen fault mgt]	-	no YES rnP FSt	[Ignore]: Ignore [Freewheel]: Detected fault management with freewheel stop [Ramp stop]: Detected fault management with stop on ramp [Fast stop]: Detected fault management with fast stop	YES	
CoP	60	[Copy channel 1<>2]	-	no SP Cd ALL	[No]: No copy [Reference]: Copy reference [Command]: Copy command [Cmd + ref.] : Copy command and reference	no	
CoS	42	[Motor 1 Cosinus Phi]	-	0.5 to 1	-	In accordance with the drive rating	
CoS2	88	[Motor 2 Cosinus Phi]	-	0.5 to 1	-	In accordance with the drive rating	
CrH3	48	[AI3 max. value]	mA	4 to 20	-	20	
CrL3	48	[AI3 min. value]	mA	0 to 20	-	4	
Ctd	39	[Current threshold]	In	0 to 1.5	-	1	
dCF	65	[Differential current fault]	-	0 to 10	-	4	
dCI	66	[DC injection assign.]	-	no LI1 LI2 LI3 LI4 LI5 LI6 Cd11 Cd12 Cd13 Cd14 Cd15	[No]: Not assigned [LI1]: Logic input LI1 [LI2]: Logic input LI2 [LI3]: Logic input LI3 [LI4]: Logic input LI4 [LI5]: Logic input LI5 [LI6]: Logic input LI6 [CD11]: Bit 11 of the control word from a communication network [CD12]: Bit 12 of the control word from a communication network [CD13]: Bit 13 of the control word from a communication network [CD14]: Bit 14 of the control word from a communication network [CD15]: Bit 15 of the control word from a communication network	no	
dE2	32 64	[Deceleration 2]	s	In accordance with inr	-	5	
dEC	32 63	[[Deceleration]	s	In accordance with inr	-	3	
do	48	[Analog./logic output]	-	no oCr oFr otr oPr FLt run FtA FLA CtA SrA tSA bLC APL	[No]: Not assigned [I motor]: Motor current [Motor freq.]: Motor frequency [Motor torq.]: Motor torque [P. supplied]: Power supplied by the drive [Drive fault]: Detected fault. [Drv running]: Drive running [Freq. limit]: Frequency threshold reached [HSP limit]: High speed reached [Brake seq.]: Current threshold reached [Freq. ref.]: Frequency reference reached [Drv thermal]: Motor thermal threshold reached [Brake seq.]: Brake sequence [No 4-20mA]: Loss of 4-20 mA signal	no	
drn	96	[Derated operation]	-	no YES	[No]: Function inactive [Yes]: Function active	no	

Index of parameter codes and customer settings

Code	Page	Name	Unit	Value/Possible function		Factory setting	Customer setting
dSP	77	[-Speed assignment]	-	no LI1 LI2 LI3 LI4 LI5 LI6	[No]: Not assigned [LI1]: Logic input LI1 [LI2]: Logic input LI2 [LI3]: Logic input LI3 [LI4]: Logic input LI4 [LI5]: Logic input LI5 [LI6]: Logic input LI6	no	
EPL	93	[External fault mgt]	-	no YES rnP FSt	[Ignore]: Ignore [Freewheel]: Detected fault management with freewheel stop [Ramp stop]]: Detected fault management with stop on ramp [Fast stop]: Detected fault management with fast stop	YES	
ErCo	98	[Error code]	-	0 1 2 3 4	No error Bus off Life time CAN overrun Heartbeat	-	
EtF	93	[External fault ass.]	-	no LI1 LI2 LI3 LI4 LI5 LI6 Cd11 Cd12 Cd13 Cd14 Cd15	[No]: Not assigned [LI1]: Logic input LI1 [LI2]: Logic input LI2 [LI3]: Logic input LI3 [LI4]: Logic input LI4 [LI5]: Logic input LI5 [LI6]: Logic input LI6 [CD11]: Bit 11 of the control word from a communication network [CD12]: Bit 12 of the control word from a communication network [CD13]: Bit 13 of the control word from a communication network [CD14]: Bit 14 of the control word from a communication network [CD15]: Bit 15 of the control word from a communication network	no	
FbS	36 80	[PID fbk scale factor]	-	0.1 to 100	-	1	
FCS	46 49 61 90	[Restore config.]	-	no rEC1 in1	[NO]: Function inactive [Internal]: The current configuration becomes identical to the backup configuration previously saved by SCS = Str1. [Factory Set.]: Current configuration replaced by the configuration selected by the CFG parameter.	no	
FLG	33	[FreqLoopGain]	%	1 to 100	-	20	
FLG2	39 88	[FreqLoopGain 2]	%	1 to 100	-	20	
FLo	99	[Forced local assign.]	-	no LI1 LI2 LI3 LI4 LI5 LI6	[No]: Not assigned [LI1]: Logic input LI1 [LI2]: Logic input LI2 [LI3]: Logic input LI3 [LI4]: Logic input LI4 [LI5]: Logic input LI5 [LI6]: Logic input LI6	no	
FLoC	99	[Forced local Ref.]	-	AI1 AI2 AI3 AIU1 LCC	[AI1]: Analog input AI1, logic inputs LI [AI2]: Analog input AI2, logic inputs LI [AI3]: Analog input AI3, logic inputs LI [Network AI]: Jog dial, RUN/STOP buttons [HMI]: Remote display terminal, RUN/STOP/FWD/REV buttons	AI1	
FLr	93	[Catch on the fly]	-	no YES	[No]: Function inactive [Yes]: Function active	no	

Index of parameter codes and customer settings

Code	Page	Name	Unit	Value/Possible function		Factory setting	Customer setting
Fr1	29 58	[Ref.1 channel]	-	AI1 AI2 AI3 AIU1 UPdt UPdH LCC ndb nEt	[AI1]: Analog input AI1 [AI2]: Analog input AI2 [AI3]: Analog input AI3 [Network AI]: Jog dial [+/-Speed]: +/- speed reference via L1 [+/-spd HMI]: +/- speed reference using the jog dial on the ATV312 keypad [HMI]: Reference via the remote display terminal [Modbus]: Reference via Modbus [Network]: Reference via network	AI1	
Fr2	58	[Ref.2 channel]	-	no AI1 AI2 AI3 AIU1 UPdt UPdH LCC ndb nEt	[No]: Not assigned [AI1]: Analog input AI1 [AI2]: Analog input AI2 [AI3]: Analog input AI3 [Network AI]: Jog dial [+/-Speed]: +/- speed reference via L1 [+/-spd HMI]: +/- speed reference using the jog dial on the ATV312 keypad [HMI]: Reference via the remote display terminal [Modbus]: Reference via Modbus [Network]: Reference via network	no	
FrH	101	[Frequency ref.]	Hz	0 to 500	-	-	
FrS	41	[Rated motor freq.]	Hz	10 to 500	-	50	
FrS2	87	[Nom. motor 2 freq.]	Hz	10 to 500	-	50	
Frt	64	[Ramp 2 threshold]	Hz	0 to 500	-	0	
FSt	65	[Fast stop]	-	no LI1 LI2 LI3 LI4 LI5 LI6 Cd11 Cd12 Cd13 Cd14 Cd15	[No]: Not assigned [LI1]: Logic input LI1 [LI2]: Logic input LI2 [LI3]: Logic input LI3 [LI4]: Logic input LI4 [LI5]: Logic input LI5 [LI6]: Logic input LI6 [CD11]: Bit 11 of the control word from a communication network [CD12]: Bit 12 of the control word from a communication network [CD13]: Bit 13 of the control word from a communication network [CD14]: Bit 14 of the control word from a communication network [CD15]: Bit 15 of the control word from a communication network	no	
Ftd	39	[Freq. threshold]	Hz	0 to 500	-	bFr	
HSP	33	[High speed]	Hz	LSP to tFr	-	bFr	
Ibr	84	[Brake release I FW]	In	0 to 1.36	-	In accordance with the drive rating	
IdC	34 66	[DC inject. level 1]	In	0 to In	-	0.7	
InH	96	[Fault inhibit assign.]	-	no LI1 LI2 LI3 LI4 LI5 LI6	[No]: Not assigned [LI1]: Logic input LI1 [LI2]: Logic input LI2 [LI3]: Logic input LI3 [LI4]: Logic input LI4 [LI5]: Logic input LI5 [LI6]: Logic input LI6	no	

Index of parameter codes and customer settings

Code	Page	Name	Unit	Value/Possible function		Factory setting	Customer setting
inr	63	[Ramp increment]	-	0.01 0.1 1	[0.01]: Ramp can be set between 0.05 s and 327.6 s. [0.1]: Ramp can be set between 0.1 s and 3,276 s. [1]: Ramp can be set between 1 s and 32,760 s.	0.1	
IPL	94	[Input phase loss]	-	no YES	[No]: Ignore [Yes]: Detected fault management with freewheel stop	YES	
ItH	33	[Mot. therm. current]	In	0.2 to 1.5	-	In accordance with the drive rating	
JF2	36	[Skip Frequency 2]	Hz	1 to 500	-	0	
JGF	36 75	[Jog frequency]	Hz	0 to 10	-	10	
JoG	75	[JOG]	-	no LI1 LI2 LI3 LI4 LI5 LI6	[No]: Not assigned [LI1]: Logic input LI1 [LI2]: Logic input LI2 [LI3]: Logic input LI3 [LI4]: Logic input LI4 [LI5]: Logic input LI5 [LI6]: Logic input LI6	no	
JPF	36	[Skip Frequency]	Hz	0 to 500	-	0	
LAC	58	[ACCESS LEVEL]	-	L1 L2 L3	[Level 1]: Access to standard functions [Level 2]: Access to advanced functions in the Fun- menu [Level 3]: Access to advanced functions and management of mixed control modes	L1	
LAF	89	[Stop FW limit sw.]	-	no LI1 LI2 LI3 LI4 LI5 LI6	[No]: Not assigned [LI1]: Logic input LI1 [LI2]: Logic input LI2 [LI3]: Logic input LI3 [LI4]: Logic input LI4 [LI5]: Logic input LI5 [LI6]: Logic input LI6	no	
LAr	89	[Stop RV limit sw.]	-	no LI1 LI2 LI3 LI4 LI5 LI6	[No]: Not assigned [LI1]: Logic input LI1 [LI2]: Logic input LI2 [LI3]: Logic input LI3 [LI4]: Logic input LI4 [LI5]: Logic input LI5 [LI6]: Logic input LI6	no	
LAS	89	[Stop type]	-	rMP FSt nSt	[Ramp stop]: On ramp [Fast stop]: Fast stop [Freewheel]: Freewheel stop	nSt	
LC2	86	[Current limit 2]	-	no LI1 LI2 LI3 LI4 LI5 LI6 Cd11 Cd12 Cd13 Cd14 Cd15	[No]: Not assigned [LI1]: Logic input LI1 [LI2]: Logic input LI2 [LI3]: Logic input LI3 [LI4]: Logic input LI4 [LI5]: Logic input LI5 [LI6]: Logic input LI6 [CD11]: Bit 11 of the control word from a communication network [CD12]: Bit 12 of the control word from a communication network [CD13]: Bit 13 of the control word from a communication network [CD14]: Bit 14 of the control word from a communication network [CD15]: Bit 15 of the control word from a communication network	no	
LCC	61	[HMI command]	-	no YES	[No]: Function inactive [Yes]: Enables control of the drive using the STOP/RESET, RUN and FWD/REV buttons on the display terminal	no	
LCr	101	[Motor current]	A	-	-	-	

Index of parameter codes and customer settings

Code	Page	Name	Unit	Value/Possible function		Factory setting	Customer setting
LEt	93	[External fault config]	-	LO HIG	[Active low]: The external fault is detected when the logic input assigned to EtF changes to state 0. [Active high]: The external fault is detected when the logic input or bit assigned to EtF changes to state 1.	HIG	
LFF	95	[Fallback speed]	Hz	0 to 500	-	10	
LFL	95	[4-20mA loss]	-	nO YES LFF rLS rnP FSt	[Ignore]: Ignore [Freewheel]: Detected fault management with freewheel stop [fallback spd]: The drive switches to the fallback speed. [Spd maint.]: The drive maintains the speed at which it was operating when the fault occurred. [Ramp stop]: Detected fault management with stop on ramp [Fast stop] : Detected fault management with fast stop	YES	
LFr	32 101	[HMI Frequency ref.]	-	0 to HSP	-	-	
LFt	102	[Last fault occurred]	-	bLF CFF CFI CnF CoF CrF EEF EPF IF1 IF2 IF3 IF4 LFF noF obF oCF oHF oLF oPF oSF PHF SCF SLF SoF tnF uSF	[Brake control]: Brake control detected fault [Incorrect config.]: Incorrect configuration [Invalid config.]: Invalid configuration [NETWORK FAULT]: Communication detected fault on the communication card [CANopen com.]: Communication detected fault line 2 (CANopen) [Capa.charg]: Capacitor precharge detected fault [EEPROM]: EEPROM memory detected fault [External]: External fault [INTERNAL FAULT]: Unknown rating [INTERNAL FAULT]: HMI card not recognized or incompatible/display absent [INTERNAL FAULT]: EEPROM detected fault [INTERNAL FAULT]: Industrial EEPROM detected fault [4-20mA]: 4-20 mA loss [No fault]: No fault code saved [Overbraking]: DC bus overvoltage [Overcurrent]: Overcurrent [Drive overheat]: Drive overheating [Motor overload]: Motor overload [Mot. phase]: Motor phase loss [Mains overvoltage]: Line supply overvoltage [Mains phase loss]: Line phase loss [Mot. short circuit]: Motor short-circuit (phase, ground) [Modbus]: Modbus communication detected fault [Overspeed]: Motor overspeed [Auto-tuning]: Auto-tuning detected fault [Undervoltage]: Line supply undervoltage		
LI1A	104	[Config.LI1]	-	-			
LI2A	104	[Config.LI2]	-	-			
LI3A	104	[Config.LI3]	-	-			
LI4A	104	[Config.LI4]	-	-			
LI5A	104	[Config.LI5]	-	-			
LI6A	104	[Config.LI6]	-	-			
LSP	33 84	[Low speed]	Hz	0 to HSP	-	0	
nCr	41	[Rated mot. current]	In	0.25 to 1.5	-	In accordance with the drive rating	
nCr2	88	[Nom. mot. 2 current]	In	0.25 to 1.5	-	In accordance with the drive rating	
nrd	44	[Noise reduction]	-	YES nO	[Yes]: Frequency with random modulation [No]: Fixed frequency	YES	

Index of parameter codes and customer settings

Code	Page	Name	Unit	Value/Possible function		Factory setting	Customer setting
nSP	42	[Rated motor speed]	rpm	0 to 32,760	-	In accordance with the drive rating	
nSP2	88	[Nom. mot. 2 speed]	rpm	0 to 32,760	-	In accordance with the drive rating	
nSt	67	[Freewheel stop ass.]	-	nO LI1 LI2 LI3 LI4 LI5 LI6	[No]: Not assigned [LI1]: Logic input LI1 [LI2]: Logic input LI2 [LI3]: Logic input LI3 [LI4]: Logic input LI4 [LI5]: Logic input LI5 [LI6]: Logic input LI6	nO	
oICt	103	[OPT1 card type]	-			YES	
oHL	94	[Overtemp fault mgt]	-	nO YES rnP FSt	[Ignore]: Ignore [Freewheel]: Detected fault management with freewheel stop [Ramp stop]: Detected fault management with stop on ramp [Fast stop]: Detected fault management with fast stop	YES	
oLL	94	[Overload fault mgt]	-	nO YES rnP FSt	[Ignore]: Ignore [Freewheel]: Detected fault management with freewheel stop [Ramp stop]: Detected fault management with stop on ramp [Fast stop]: Detected fault management with fast stop	YES	
oPL	94	[Output Phase Loss]	-	nO YES oAC	[No]: Function inactive [Yes]: Tripping on oPF [Output cut]: No tripping on [MOTOR PHASE LOSS] (OPF), but output voltage is managed	YES	
oPr	101	[Motor power]	%	-	-	-	
otr	102	[Motor torque]	%	-	-	-	
PIC	36 80	[PID correct. reverse]	-	nO YES	[No]: Normal [Yes]: Reverse	nO	
PIF	80	[PID feedback ass.]	-	nO AI1 AI2 AI3	[No]: Not assigned [AI1]: Analog input AI1 [AI2]: Analog input AI2 [AI3]: Analog input AI3	nO	
PII	82	[Act. internal PID ref.]	-	nO YES	[No]: The reference for the PI regulator is Fr1, except for uPdH and uPdt. [Yes]: The reference for the PI regulator is provided internally via the rPI parameter.	nO	
Pr2	80	[2 preset PID ref.]	-	nO LI1 LI2 LI3 LI4 LI5 LI6 Cd11 Cd12 Cd13 Cd14 Cd15	[No]: Not assigned [LI1]: Logic input LI1 [LI2]: Logic input LI2 [LI3]: Logic input LI3 [LI4]: Logic input LI4 [LI5]: Logic input LI5 [LI6]: Logic input LI6 [CD11]: Bit 11 of the control word from a communication network [CD12]: Bit 12 of the control word from a communication network [CD13]: Bit 13 of the control word from a communication network [CD14]: Bit 14 of the control word from a communication network [CD15]: Bit 15 of the control word from a communication network	nO	

Index of parameter codes and customer settings

Code	Page	Name	Unit	Value/Possible function	Factory setting	Customer setting
Pr4	81	[4 preset PID ref.]	-	no: [No]: Not assigned LI1: [LI1]: Logic input LI1 LI2: [LI2]: Logic input LI2 LI3: [LI3]: Logic input LI3 LI4: [LI4]: Logic input LI4 LI5: [LI5]: Logic input LI5 LI6: [LI6]: Logic input LI6 CD11: [CD11]: Bit 11 of the control word from a communication network CD12: [CD12]: Bit 12 of the control word from a communication network CD13: [CD13]: Bit 13 of the control word from a communication network CD14: [CD14]: Bit 14 of the control word from a communication network CD15: [CD15]: Bit 15 of the control word from a communication network	no	
PS16	73	[16 preset speeds]	-	no: [No]: Not assigned LI1: [LI1]: Logic input LI1 LI2: [LI2]: Logic input LI2 LI3: [LI3]: Logic input LI3 LI4: [LI4]: Logic input LI4 LI5: [LI5]: Logic input LI5 LI6: [LI6]: Logic input LI6 CD11: [CD11]: Bit 11 of the control word from a communication network CD12: [CD12]: Bit 12 of the control word from a communication network CD13: [CD13]: Bit 13 of the control word from a communication network CD14: [CD14]: Bit 14 of the control word from a communication network CD15: [CD15]: Bit 15 of the control word from a communication network	no	
PS2	72	[2 preset speeds]	-	no: [No]: Not assigned LI1: [LI1]: Logic input LI1 LI2: [LI2]: Logic input LI2 LI3: [LI3]: Logic input LI3 LI4: [LI4]: Logic input LI4 LI5: [LI5]: Logic input LI5 LI6: [LI6]: Logic input LI6 CD11: [CD11]: Bit 11 of the control word from a communication network CD12: [CD12]: Bit 12 of the control word from a communication network CD13: [CD13]: Bit 13 of the control word from a communication network CD14: [CD14]: Bit 14 of the control word from a communication network CD15: [CD15]: Bit 15 of the control word from a communication network	LI3	
PS4	72	[4 preset speeds]	-	no: [No]: Not assigned LI1: [LI1]: Logic input LI1 LI2: [LI2]: Logic input LI2 LI3: [LI3]: Logic input LI3 LI4: [LI4]: Logic input LI4 LI5: [LI5]: Logic input LI5 LI6: [LI6]: Logic input LI6 CD11: [CD11]: Bit 11 of the control word from a communication network CD12: [CD12]: Bit 12 of the control word from a communication network CD13: [CD13]: Bit 13 of the control word from a communication network CD14: [CD14]: Bit 14 of the control word from a communication network CD15: [CD15]: Bit 15 of the control word from a communication network	LI4	
PS8	72	[8 preset speeds]	-	no: [No]: Not assigned LI1: [LI1]: Logic input LI1 LI2: [LI2]: Logic input LI2 LI3: [LI3]: Logic input LI3 LI4: [LI4]: Logic input LI4 LI5: [LI5]: Logic input LI5 LI6: [LI6]: Logic input LI6 CD11: [CD11]: Bit 11 of the control word from a communication network CD12: [CD12]: Bit 12 of the control word from a communication network CD13: [CD13]: Bit 13 of the control word from a communication network CD14: [CD14]: Bit 14 of the control word from a communication network CD15: [CD15]: Bit 15 of the control word from a communication network	no	
PSt	61	[[Stop Key priority]]	-	no: [No]: Function inactive YES: [Yes]: STOP key priority	YES	

Index of parameter codes and customer settings

Code	Page	Name	Unit	Value/Possible function		Factory setting	Customer setting
r1	49	[R1 Assignment]	-	nO FLt run FtA FLA CtA SrA tSA APL LI1 to LI6	[No]: Not assigned [No drive flt]: No drive detected fault [Drv running] : Drive running [Freq.Th.att.]: Frequency threshold reached [HSP attain.] : High speed reached [I attained] : Current threshold reached [Freq.ref.att]: Frequency reference reached [Th.mot. att.]: Motor thermal threshold reached [4-20mA]: Loss of 4-20 mA signal [LI1] to [LI6]: Returns the value of the selected logic input	FLt	
r2	49	[R2 Assignment]		nO FLt run FtA FLA CtA SrA tSA bLC APL LI1 to LI6	[No]: Not assigned [No drive flt]: No drive detected fault [Drv running] : Drive running [Freq.Th.att.]: Frequency threshold reached [HSP attain.] : High speed reached [I attained] : Current threshold reached [Freq.ref.att]: Frequency reference reached [Th.mot. att.]: Motor thermal threshold reached [Brk control]: Brake sequence [4-20mA]: Loss of 4-20 mA signal [LI1] to [LI6]: Returns the value of the selected logic input	nO	
rFC	59	[Ref. 2 switching]	-	Fr1 Fr2 LI1 LI2 LI3 LI4 LI5 LI6 C111 C112 C113 C114 C115 C211 C212 C213 C214 C215	[ch1 active] : Reference 1 [ch2 active] : Reference 2 [LI1]: Logic input LI1 [LI2]: Logic input LI2 [LI3]: Logic input LI3 [LI4]: Logic input LI4 [LI5]: Logic input LI5 [LI6]: Logic input LI6 [C111]: Bit 11 of Modbus control word [C112]: Bit 12 of Modbus control word [C113]: Bit 13 of Modbus control word [C114]: Bit 14 of Modbus control word [C115]: Bit 15 of Modbus control word [C211]: Bit 11 of network control word [C212]: Bit 12 of network control word [C213]: Bit 13 of network control word [C214]: Bit 14 of network control word [C215]: Bit 15 of network control word	Fr1	
rFr	101	[Output frequency]	Hz	-500 to +500	-	-	
rIG	36 80	[PID integral gain]	-	0.01 to 100	-	1	
rot	61	[Rotating direction]	-	dFr drS bot	[Forward]: Forward [Reverse]: Reverse [Both]: Both directions are authorized.	dFr	
rP	97	[Product reset]	-	nO YES	[No]: No [Yes]: Yes	nO	
rP2	36 81	[Preset ref. PID 2]	%	0 to 100	-	30	
rP3	36 81	[Preset ref. PID 3]	%	0 to 100	-	60	
rP4	36 81	[Preset ref. PID 4]	%	0 to 100	-	90	
rPG	36 80	[PID prop. gain]	-	0.01 to 100	-	1	
rPI	32 82 101	[Internal PID ref.]	%	0 to 100	-	0	
rPr	97	[Operating t. reset]	-	nO rtH	[No]: No [rst. runtime]: Operating time reset to zero	nO	

Index of parameter codes and customer settings

Code	Page	Name	Unit	Value/Possible function		Factory setting	Customer setting
rPS	64	[Ramp switch ass.]	-	nO LI1 LI2 LI3 LI4 LI5 LI6 Cd11 Cd12 Cd13 Cd14 Cd15	[No]: Not assigned [LI1]: Logic input LI1 [LI2]: Logic input LI2 [LI3]: Logic input LI3 [LI4]: Logic input LI4 [LI5]: Logic input LI5 [LI6]: Logic input LI6 [CD11]: Bit 11 of the control word from a communication network [CD12]: Bit 12 of the control word from a communication network [CD13]: Bit 13 of the control word from a communication network [CD14]: Bit 14 of the control word from a communication network [CD15]: Bit 15 of the control word from a communication network	nO	
rPt	62	[Ramp type]	-	LIn S U CuS	[Linear]: Linear [S ramp]: S ramp [U ramp]: U ramp [Customized]: Customized	LIn	
rrS	48	[Reverse assign.]	-	nO LI1 LI2 LI3 LI4 LI5 LI6	[No]: Not assigned [LI1]: Logic input LI1 [LI2]: Logic input LI2 can be accessed if tCC = 2C. [LI3]: Logic input LI3 [LI4]: Logic input LI4 [LI5]: Logic input LI5 [LI6]: Logic input LI6	LI2	
rSC	42	[Cold stator resist.]	-	nO InIt 8888	[NO]: Function inactive [Init]: Activates the function Value of cold state stator resistance used	nO	
rSF	92	[Fault reset]	-	nO LI1 LI2 LI3 LI4 LI5 LI6	[No]: Not assigned [LI1]: Logic input LI1 [LI2]: Logic input LI2 [LI3]: Logic input LI3 [LI4]: Logic input LI4 [LI5]: Logic input LI5 [LI6]: Logic input LI6	nO	
rSL	38 82	[PID wake up thresh.]	%	0 to 100	-	0	
rtH	102	[Run time]	Time	-	-	-	
SA2	70	[Summing ref. 2]	-	nO AI1 AI2 AI3 AIU1 LCC ndb nEt	[No]: Not assigned [AI1]: Analog input AI1 [AI2]: Analog input AI2 [AI3]: Analog input AI3 [Network AI]: Jog dial [HMI]: Reference via the remote display terminal [Modbus]: Reference via Modbus [Network]: Reference via network	AI2	
SA3	70	[Summing ref. 3]	-	nO AI1 AI2 AI3 AIU1 LCC ndb nEt	[No]: Not assigned [AI1]: Analog input AI1 [AI2]: Analog input AI2 [AI3]: Analog input AI3 [Network AI]: Jog dial [HMI]: Reference via the remote display terminal [Modbus]: Reference via Modbus [Network]: Reference via network	nO	
SCS	45 49 61 90	[Saving config.]	-	nO Str1	[No]: Function inactive [Config 1] : Saves the current configuration to EEPROM	nO	
SdC1	35 68	[Auto DC inj. level 1]	In	0 to 1.2	-	0.7	
SdC2	35 69	[Auto DC inj. level 2]	In	0 to 1.2	-	0.5	
SdS	40	[Scale factor display]	-	0.1 to 200	-	30	

Index of parameter codes and customer settings

Code	Page	Name	Unit	Value/Possible function		Factory setting	Customer setting
SFr	40 44	[Switching freq.]	kHz	2.0 to 16	-	4	
SLL	95	[Modbus fault mgt]	-	nO YES rnP FSt	[Ignore]: Ignore [Freewheel]: Detected fault management with freewheel stop. [Ramp stop]: Detected fault management with stop on ramp [Fast stop]: Detected fault management with fast stop	YES	
SLP	34	[Slip compensation]	%	0 to 150	-	100	
SLP2	39 88	[Slip compensation 2]	%	0 to 150	-	100	
SP10	37 73	[Preset speed 10]	Hz	0 to 500	-	50	
SP11	37 74	[Preset speed 11]	Hz	0 to 500	-	55	
SP12	37 74	[Preset speed 12]	Hz	0 to 500	-	60	
SP13	37 74	[Preset speed 13]	Hz	0 to 500	-	70	
SP14	37 74	[Preset speed 14]	Hz	0 to 500	-	80	
SP15	37 74	[Preset speed 15]	Hz	0 to 500	-	90	
SP16	37 74	[Preset speed 16]	Hz	0 to 500	-	100	
SP2	36 73	[Preset speed 2]	Hz	0 to 500	-	10	
SP3	37 73	[Preset speed 3]	Hz	0 to 500	-	15	
SP4	37 73	[Preset speed 4]	Hz	0 to 500	-	20	
SP5	37 73	[Preset speed 5]	Hz	0 to 500	-	25	
SP6	37 73	[Preset speed 6]	Hz	0 to 500	-	30	
SP7	37 73	[Preset speed 7]	Hz	0 to 500	-	35	
SP8	37 73	[Preset speed 8]	Hz	0 to 500	-	40	
SP9	37 73	[Preset speed 9]	Hz	0 to 500	-	45	
SPd1	101	[Cust. output value]	-	-	-	-	
SPd2	101	[Cust. output value]	-	-	-	-	
SPd3	101	[Cust. output value]	-	-	-	-	
SrF	44	[Speed loop filter]	-	nO YES	[No]: Filter remains active [Yes]: Filter suppressed	nO	
StA	34	[Fr.Loop.Stab]	%	1 to 100	-	20	
StA2	39 88	[Freq. loop stability 2]	%	0 to 100	-	20	

Index of parameter codes and customer settings

Code	Page	Name	Unit	Value/Possible function		Factory setting	Customer setting
StP	96	[UnderV. prevention]	-	nO nnS rMP FSt	[No]: Locking of the drive and freewheel stopping of the motor [DC Maintain]: Stop mode using inertia to maintain the drive power supply as long as possible [Ramp stop]: Stop according to the valid ramp [Fast stop]: Fast stop	nO	
Str	77	[Reference saved]	-	nO rAn EEP	[No]: No saving [RAM]: Saving in RAM [EEprom]: Saving in EEPROM	nO	
Stt	65	[Type of stop]	-	rMP FSt nSt dC I	[Ramp stop]: On ramp [Fast stop]: Fast stop [Freewheel]: Freewheel stop [DC injection]: DC injection stop	rMP	
tA1	33 63	[Begin Acc round]	%	0 to 100	-	10	
tA2	33 63	[End Acc round]	%	0 to (100 - tA1)	-	10	
tA3	33 63	[Begin Dec round]	%	0 to 100	-	10	
tA4	33 63	[End Dec round]	%	0 to (100 - tA3)	-	10	
tAr	92	[Max. restart time]	-	5 10 30 1h 2h 3h Ct	[5 minutes]: 5 minutes [10 minutes]: 10 minutes [30 minutes]: 30 minutes [1 hour]: 1 hour [2 hours]: 2 hours [3 hours]: 3 hours [Unlimited]: Unlimited	5	
tbr	98	[Modbus baud rate]	bps	4.8 9.6 19.2	[4.8 Kbps]: 4,800 bits/second [9.6 Kbps]: 9600 bits/second [19.2 Kbps]: 19,200 bits/second	19.2	
tCC	30 47	[2/3 wire control]	-	2C 3C LoC	[2 wire]: 2-wire control [3 wire]: 3-wire control [Local]: Local control (drive RUN/STOP/RESET)	2C	
tCt	47	[2 wire type]	-	LEL trn PFo	[Level]: State 0 or 1 [Transition]: Change of state (transition or edge) [Fwd priority]: State 0 or 1, "forward" input takes priority over the "reverse" input	trn	
tdC	34 67	[DC injection time 2]	s	0.1 to 30	-	0.5	
tdC1	34 68	[Auto DC inj. time 1]	s	0.1 to 30	-	0.5	
tdC2	35 69	[Auto DC inj. time 2]	s	0 to 30	-	0	
tFo	98	[Modbus format]	-	8o1 8E1 8n1 8n2	[8-O-1]: 8 data bits, odd parity, 1 stop bit [8-E-1]: 8 data bits, even parity, 1 stop bit [8-N-1]: 8 data bits, no parity, 1 stop bit [8-N-2]: 8 data bits, no parity, 2 stop bits	8E1	
tFr	44	[Max frequency]	Hz	10 to 500	-	60	
tHd	101	[Drv. Therm att.]	-	-	-	-	
tHr	101	[Motor thermal state]	-	-	-	-	
tLS	38	[Low speed time out]	s	0 to 999.9	-	0	

Index of parameter codes and customer settings

Code	Page	Name	Unit	Value/Possible function		Factory setting	Customer setting
tnL	95	[Autotune fault mgt]	-	nO YES	[No]: Ignore [Yes]: Detected fault management with drive locked	YES	
ttd	39	[Motor therm. level]	%	1 to 118	-	100	
tto	98	[Modbus time out]	s	0.1 to 30	-	10	
tun	43	[Auto tuning]	-	nO YES donE run Pon LI1 to LI6	[No]: Auto-tuning not performed [Yes]: Auto-tuning performed as soon as possible [Done]: Use of the values given the last time auto-tuning was performed [Drv running]: Auto-tuning performed every time a run command is sent [Power on]: Auto-tuning performed on every power-up [LI1] to [LI6]: Auto-tuning performed on the transition from 0 ➡ 1 of a logic input assigned to this function	nO	
tuS	43 103	[Auto tuning state]	-	tAb PEnd PrOG FAIL donE Strd CuS	[Not done]: Default stator resistance value used to control the motor [Pending]: Auto-tuning requested but not yet performed [In progress]: Auto-tuning in progress [Failed]: Auto-tuning failed [Done]: Stator resistance measured by the auto-tuning function used to control the motor [Entered R1]: Cold state stator resistance used to control the motor The value of [Cold stator resist.] (rSC) is set manually	tAb	
udP	103	[Drv.Soft.Ver]	-	-	-	-	
uFr	33	[IR compensation]	%	0 to 100	-	20	
uFr2	39 88	[IR compensation 2]	%	0 to 100	-	20	
uFt	44	[U/F mot 1 selected]	-	L P n nLd	[Cst. torque]: Constant torque [Var. torque] : Variable torque [SVC]: Flux vector control [Energy sav.]: Energy saving	n	
uFt2	88	[U/F mot.2 selected]	-	L P n nLd	[Cst. torque]: Constant torque [Var. torque] : Variable torque [SVC]: Flux vector control [Energy sav.]: Energy saving	n	
uLn	101	[Mains voltage]	V	-	-	-	
unS	41	[Rated motor volt.]	V	-	-	In accordance with the drive rating	
unS2	87	[Nom. mot. 2 volt.]	V	-	-	In accordance with the drive rating	

MultiModem® iCell

Intelligent Cellular Modems

The MultiModem® iCell family of intelligent cellular modems offers a broad range of options including 2G and 3G models as well as a full line of GSM and CDMA models. All MultiModem iCell modems are fully certified and carrier approved so you can get to market extremely fast allowing customers to start obtaining the benefits of M2M. MultiTech products are designed specifically for M2M applications thus they are durable, stable, reliable, and easy to deploy. In addition, the MultiModem iCell includes Universal IP® stack which allows users to implement enhanced M2M functions such as persistent connectivity, event monitoring, and others.

Features

- 3G and 2G models available
- GSM and CDMA models available
- Models with GPS tracking capability
- USB and Serial connectors
- GPIO connectivity
- Universal IP stack for enhanced M2M functionality
- FCC, PTCRB, Industry Canada, and R&TTE certified
- Carrier approved
- Two year warranty, upgradable to five years

Benefits

- Quick deployments to shorten time to market
- Long and stable lifecycles
- Certified and carrier approved

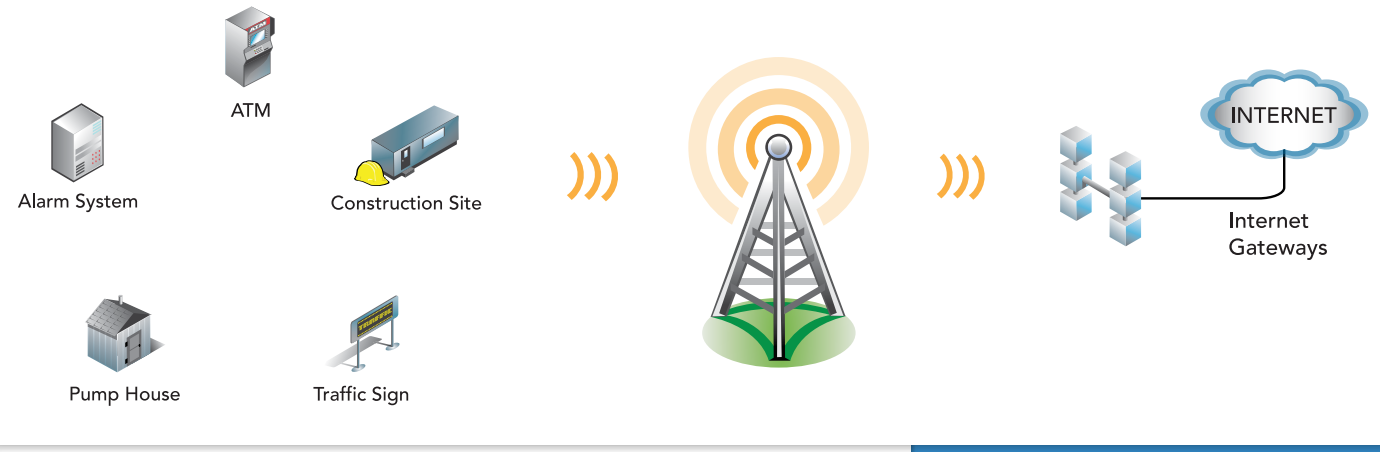

Specifications

Models	MTCMR-H5	MTCMR-EV2 MTCMR-EV3	MTCMR-E1
Technical Specifications			
Performance	HSPA+	EV-DO Rev A backwards compatible to EV-DO Rev 0 and CDMA2000 1xRTT	EDGE: E-GPRS Class 12 GPRS: Multislot Class 12
Frequency Band	Penta band 850/900/1700/1900/2100 MHz	Dual band 800/1900 MHz	Quad band 850/900/1800/1900 MHz
Packet Data*	HSDPA data service of up to 21.0 Mbps HSUPA data service of up to 5.76 Mbps	Up to 153.6K bps forward and reverse	EDGE: E-GPRS up to 240K bps, coding scheme MCS1-9, mobile station Class B, LLC layer, 4 time slots GPRS: Full PBCCH support, coding scheme 1-4, mobile station Class B
Circuit Switched Data	NA	IS-95A, IS-95B up to 14.4K bps forward and reverse	Up to 14.4 Kbps, non-transparent
SMS	Text & PDU, Point-to-Point, Cell broadcast		
Universal IP Features	TCP/IP Features: DNS resolve, FTP client, Ping, POP3 client, PPP (dial out), SMTP client, TCP RAW client & server, UDP RAW client and server, PAP, CHAP		
Voltage	9V to 32VDC		
Connectors			
RF Antenna Connector	50 ohm SMA (female connector)		
SIM Connector	Mini SIM; 1.8 and 3V	NA	Mini SIM; 1.8 and 3V
GPIO Connector	6 pin 2x3 style		
USB Connector	Type B		
RS-232 Connector	DE9		
Power Connector	2.5mm miniature (screw-on)		
Physical Description			
Physical Dimensions (L x W x H)	3.1" x 4.9" x 1.1" (7.9cm x 12.4cm x 2.8cm)		
Physical Weight	8 oz (227 g)		
Chassis Type	Aluminum		
Environmental			
Operating Temperature**	-22° to +167° F (-30° to +75° C)	-22° to +185° F (-30° to +85° C)	-31° to +167° F (-35° to +75° C)
Storage Temperature	-40° to +185° F (-40° to +85° C)		
Humidity	Relative humidity 20% to 90% noncondensing		
Certifications			
EMC Compliance Certifications	FCC Part 15 Class B, EN55022 Class B	FCC Part 15 Class B	FCC Part 15 Class B, EN55022 Class B
Radio Compliance Certifications	FCC Part 22, 24, RSS132, 133, EN301 489-1, EN489-3 (GPS models only), EN301 489-7, EN301 489-24, EN301 511, EN301 908, AS/ACIF S042.1, S042.3	FCC Part 22, 24	FCC Part 22, 24, RSS132, 133, EN301 489-1, EN489-3 (GPS models only), EN301 489-7, EN301 511, EN301 908, AS/ACIF S042.1, S042.3
Safety Certifications	UL/cUL 60950-1 2nd Ed, IEC60950-1 2nd Ed am.1	UL 60950-1 2nd Ed	UL/cUL 60950-1 2nd Ed, IEC60950-1 2nd Ed am.1
Network Certifications	PTCRB	Verizon, Sprint	PTCRB

Specifications

Models	MTCMR-G2	MTCMR-C2
Technical Specifications		
Performance	GPRS Class 10	CDMA2000 1xRTT
Frequency Band	Quad band 850/900/1800/1900 MHz	Dual band 800/1900 MHz
Packet Data*	Up to 85.6K bps, coding schemes CS1 to CS4	Up to 153.6K bps forward and reverse
Circuit Switched Data	Up to 14.4 Kbps transparent and non-transparent	IS-95A, IS-95B up to 14.4K bps forward and reverse
SMS	Text & PDU, Point-to-Point, Cell broadcast	
Universal IP Features	TCP/IP Features: DNS resolve, FTP client, Ping, POP3 client, PPP (dial out), SMTP client, TCP RAW client & server, UDP RAW client and server, PAP, CHAP	
Voltage	9V to 32V DC	
Connectors		
RF Antenna Connector	50 ohm SMA (female connector)	
SIM Connector	Mini SIM; 1.8 and 3V	NA
GPIO Connector	6 pin 2x3 style	
USB Connector	Type B	
RS-232 Connector	DE9	
Power Connector	2.5mm miniature (screw-on)	
Physical Description		
Physical Dimensions (L x W x H)	3.1" x 4.9" x 1.1" (7.9cm x 12.4cm x 2.8cm)	
Physical Weight	8 oz (227 g)	
Chassis Type	Aluminum	
Environmental		
Operating Temperature**	-40° to +185° F (-40° to +85° C)	
Storage Temperature	-40° to +185° F (-40° to +85° C)	
Humidity	Relative humidity 20% to 90% noncondensing	
Certifications		
EMC Compliance Certifications	FCC Part 15 Class B, EN55022 Class B	FCC Part 15 Class B
Radio Compliance Certifications	FCC Part 22, 24, RSS132, 133, EN301 489-1, EN489-3 (GPS models only), EN301 489-7, EN301 511, EN301 908, AS/ACIF S042.1, S042.3	FCC Part 22, 24
Safety Certifications	UL/cUL 60950-1 2nd Ed, IEC60950-1 2nd Ed am.1	UL 60950-1 2nd Ed
Network Certifications	PTCRB	Verizon, Sprint, Aeris

* Actual performance speeds may be affected by a variety of attributes such as cell tower distance, data loads, packet sizes, etc.

**UL Listed @ 40° C, limited by power supply. UL Certification does not apply or extend to an ambient above 40° C and has not been evaluated by UL for ambient greater that 40° C. "UL has evaluated this device for use in ordinary locations only. Installation in a vehicle or other outdoor locations has not been evaluated by UL. UL Certification does not apply or extend to use in vehicles or outdoor applications or in ambient above 40° C."

Specifications

GPS Specifications	
Accuracy	Position 2.5m CEP, Velocity 0.1 m/sec
Open Sky TTFF	Hot start 1 second Cold start 29 seconds Reacquistion <1s
Sensitivity Tracking	-161 dBm
Protocol	NMEA-0183, V3.01, GGA, GLL, GSA, GSV, RMC, VTG
GPIO Functions	
Pin 1	Digital input, 24V tolerance
Pin 2	Digital input, 24V tolerance
Pin 3	Configurable as either Digital input (5V tolerant TTL/CMOS levels) or Digital output (3.3V High) or as an ADC input (0 to 3.3V rail)
Pin 4	Configurable as either Digital input (5V tolerant TTL/CMOS levels) or Digital output (3.3V High) or as an ADC input (0 to 3.3V rail)
Pin 5	ADC input (0 to 3.3V rail)
Pin 6	Ground and must be connected to the ground of the attached device

Ordering Information

GSM Products

Product	Description	Bundle Available	Region
MTCMR-H5	Intelligent HSPA+ Modem	Yes*	Regional
MTCMR-H5-GP	Intelligent HSPA+ Modem with GPS	No	Regional
MTCMR-E1	Intelligent EDGE Modem	Yes*	Global
MTCMR-E1-GP	Intelligent EDGE Modem with GPS	No	Global
MTCMR-G2	Intelligent GPRS Modem	Yes*	Global
MTCMR-G2-GP	Intelligent GPRS Modem with GPS	No	Global

* Bundles include power supply, antenna, and cables and are noted as follows.

-NAM Includes US style power plug

-EU Includes Euro style power plug

-GB/IE Includes UK style power plug

CDMA Products

Product	Description	Bundle Available	Region
MTCMR-EV2-Nx**	Intelligent EV-DO Rev A Modem	Yes*	USA
MTCMR-EV2-GP-Nx**	Intelligent EV-DO Rev A Modem with GPS	No	USA
MTCMR-C2-Nx**	Intelligent 1xRTT Modem	Yes*	Regional
MTCMR-C2-GP-Nx**	Intelligent 1xRTT Modem with GPS	No	Regional

* Bundles include power supply, antenna, and cables and are noted as follows.

-NAM Includes US style power plug

** Nx signifies the specific Carrier that the product is approved for

-N2 For Sprint Networks (USA)

-N3 For Verizon Wireless Networks (USA)

-N16 For Aeris Communications Networks (USA)

Use ordering codes for specific build options. Go to www.multitech.com for detailed product model numbers.

Services & Warranty

MultiTech's comprehensive Support Services programs offer a full array of options to suit your specific needs. These services are aimed at protecting your investment, extending the life of your solution or product, and reducing total cost of ownership. Our seasoned technical experts, with an average tenure of more than 10 years, can walk you through smooth installations, troubleshoot issues and help you with configurations. Products include a 2-year warranty that can be extended up to 5 years via MultiTech's Extended Warranty program.

Extended Warranty

To give you peace-of-mind and protect your investment, our Extended Warranty Service Plans ensure your MultiTech products are covered for 1, 2, or 3 years beyond the manufacturer's warranty.

Installation Support

MultiTech's Installation Support Service delivers priority service with the ability to work one-on-one with an experienced MultiTech technical support engineer, to guide you through the installation process for our products.

Technical Support Services

At MultiTech, we're committed to providing you personalized attention and quality service while providing you a quick response to your product support needs. We have several options of support for you to choose from.

For additional information on Support Services as well as other service offerings, please contact your MultiTech representative or visit www.multitech.com/support.go.

World Headquarters
Multi-Tech Systems, Inc.
2205 Woodale Drive
Mounds View, MN 55112 U.S.A.
Tel: 763-785-3500
Toll-Free: 800-328-9717
Email: sales@multitech.com
www.multitech.com

EMEA Headquarters
Multi-Tech Systems (EMEA)
United Kingdom
Tel: +(44) 118 959 7774
Email: sales@multitech.co.uk

Produced in the U.S. of U.S. and non-U.S. components. Features and specifications are subject to change without notice.

Trademarks and Registered Trademarks: Multi-Tech and the Multi-Tech logo, MultiModem, Universal IP: Multi-Tech Systems, Inc. All other products and technologies are the trademarks or registered trademarks of their respective holders.

Two-4-One™ Power Transformers
Chassis Mount

Split Bobbin Construction Providing Superior Isolation.

Signal's 241 transformers use a split bobbin construction that provides superior isolation and low capacitive coupling.

General Specifications

- Power - 2.4 VA to 100 VA
- Dielectric Strength - 2500 Vrms Hipot
- Primaries - Single or dual primaries (115V or 115/230 V - 50/60 Hz)
- Secondary - Single center tapped secondary
- Terminals - Solder lug / quick connect type terminals
- Insulation - Class B (130º C) UL 1446 E66312

Agency Certifications

- UL recognized to UL 506 / UL 5085-1, File # E63829
- CSA certified to C22.2 #66.1, File # 221070

RoHS 2002/95/EC

Part Number		Secondary RMS Rating	Part Number		Secondary RMS Rating
Single 115V	Dual 115/230V		Single 115V	Dual 115/230V	
241-3-10	Not Available	10.0 VCT @ 0.25A	241-3-28	Not Available	28 VCT @ 0.085A
241-4-10	DP-241-4-10	10.0 VCT @ 0.60A	241-4-28	DP-241-4-28	28 VCT @ 0.20A
241-5-10	DP-241-5-10	10.0 VCT @ 1.2A	241-5-28	DP-241-5-28	28 VCT @ 0.42A
241-6-10	DP-241-6-10	10.0 VCT @ 3.0A	241-6-28	DP-241-6-28	28 VCT @ 1.1A
241-7-10	DP-241-7-10	10.0 VCT @ 5.0A	241-7-28	DP-241-7-28	28 VCT @ 2.0A
241-8-10	DP-241-8-10	10.0 VCT @ 10A	241-8-28	DP-241-8-28	28 VCT @ 3.6A
241-3-12	Not Available	12.6 VCT @ 0.20A	241-3-36	Not Available	36 VCT @ 0.065A
241-4-12	DP-241-4-12	12.6 VCT @ 0.50A	241-4-36	DP-241-4-36	36 VCT @ 0.17A
241-5-12	DP-241-5-12	12.6 VCT @ 1.0A	241-5-36	DP-241-5-36	36 VCT @ 0.35A
241-6-12	DP-241-6-12	12.6 VCT @ 2.5A	241-6-36	DP-241-6-36	36 VCT @ 0.85A
241-7-12	DP-241-7-12	12.6 VCT @ 4.0A	241-7-36	DP-241-7-36	36 VCT @ 1.5A
241-8-12	DP-241-8-12	12.6 VCT @ 8.0A	241-8-36	DP-241-8-36	36 VCT @ 2.8A
241-3-16	Not Available	16.0 VCT @ 0.15A	241-3-48	Not Available	48 VCT @ 0.05A
241-4-16	DP-241-4-16	16.0 VCT @ 0.40A	241-4-48	DP-241-4-48	48 VCT @ 0.125A
241-5-16	DP-241-5-16	16.0 VCT @ 0.80A	241-5-48	DP-241-5-48	48 VCT @ 0.25A
241-6-16	DP-241-6-16	16.0 VCT @ 2.0A	241-6-48	DP-241-6-48	48 VCT @ 0.63A
241-7-16	DP-241-7-16	16.0 VCT @ 3.5A	241-7-48	DP-241-7-48	48 VCT @ 1.2A
241-8-16	DP-241-8-16	16.0 VCT @ 6.25A	241-8-48	DP-241-8-48	48 VCT @ 2.0A
241-3-20	Not Available	20.0 VCT @ 0.12A	241-3-56	Not Available	56 VCT @ 0.045A
241-4-20	DP-241-4-20	20.0 VCT @ 0.30A	241-4-56	DP-241-4-56	56 VCT @ 0.11A
241-5-20	DP-241-5-20	20.0 VCT @ 0.60A	241-5-56	DP-241-5-56	56 VCT @ 0.22A
241-6-20	DP-241-6-20	20.0 VCT @ 1.5A	241-6-56	DP-241-6-56	56 VCT @ 0.54A
241-7-20	DP-241-7-20	20.0 VCT @ 2.8A	241-7-56	DP-241-7-56	56 VCT @ 1.00A
241-8-20	DP-241-8-20	20.0 VCT @ 5.0A	241-8-56	DP-241-8-56	56 VCT @ 1.8A
241-3-24	Not Available	24.0 VCT @ 0.10A	241-3-120	Not Available	120VCT @ 0.02A
241-4-24	DP-241-4-24	24.0 VCT @ 0.25A	241-4-120	DP-241-4-120	120VCT @ 0.05A
241-5-24	DP-241-5-24	24.0 VCT @ 0.50A	241-5-120	DP-241-5-120	120VCT @ 0.10A
241-6-24	DP-241-6-24	24.0 VCT @ 1.25A	241-6-120	DP-241-6-120	120VCT @ 0.25A
241-7-24	DP-241-7-24	24.0 VCT @ 2.4A	241-7-120	DP-241-7-120	120VCT @ 0.50A
241-8-24	DP-241-8-24	24.0 VCT @ 4.0A	241-8-120	DP-241-8-120	120VCT @ 0.85A

Custom versions available upon request.

©2015 Signal Transformer Inc. Specifications subject to change without notice. 07.15

signal TRANSFORMER a bel group
www.signaltransformer.com

500 Bayview Avenue, Inwood, NY 11096
Toll Free 866-239-5777 • Tel 516-239-5777 • Fax 516-239-7208
sales@signaltransformer.com • techhelp@signaltransformer.com

Two-4-One™ Power Transformers
Chassis Mount

Split Bobbin with High Isolation

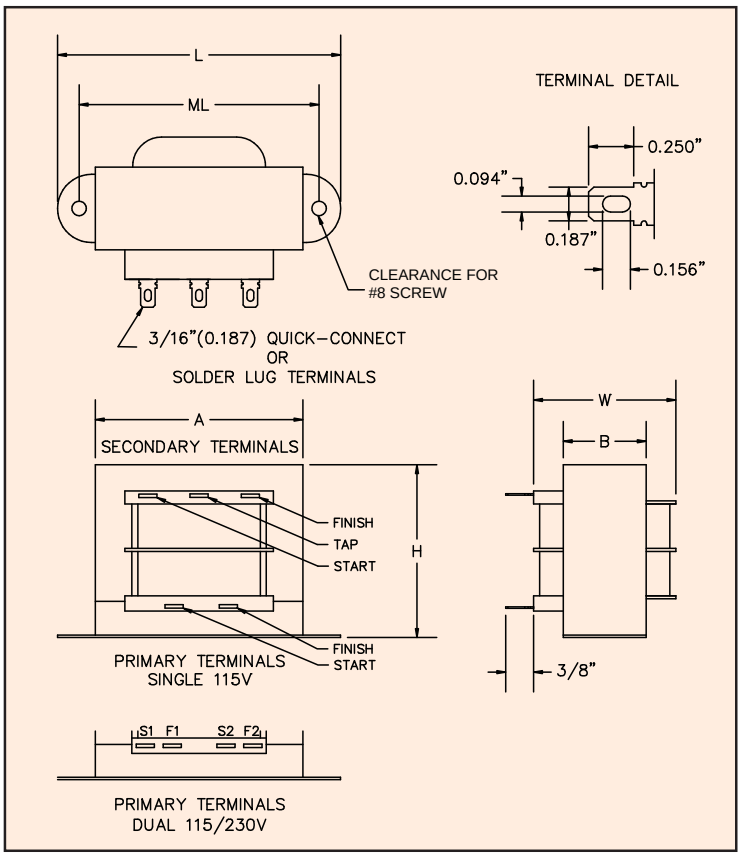

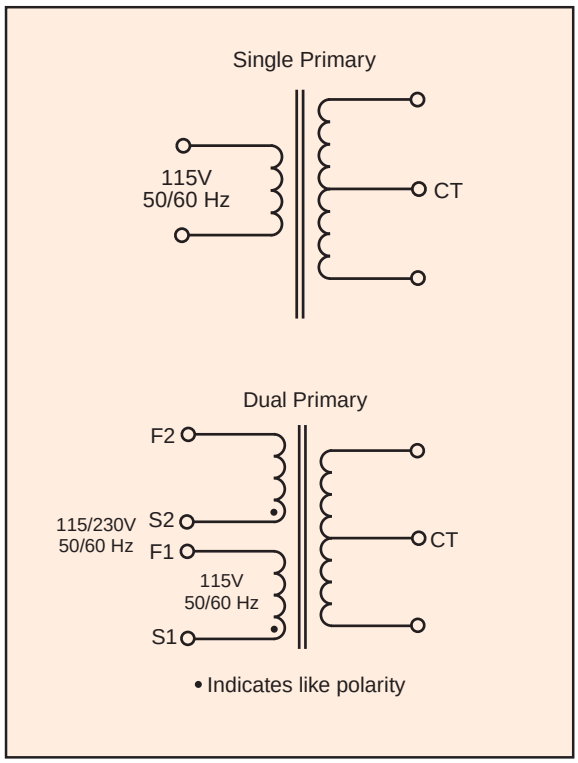

Note: Agency certified 241 Series transformers with standard length and color lead wires are readily available. See website for 241-L product series.

Size	VA	Dimensions						Weight
		L	W	H	A	B	ML typ	
		Inches (mm)						lbs (kg)
3	2.4	2.07 (52.6)	1.17 (29.6)	1.23 (31.2)	1.62 (41.3)	0.59 (15.0)	1.75 (44.5)	0.25 (0.11)
4	6	2.37 (60.3)	1.31 (33.3)	1.43 (36.2)	1.71 (43.4)	0.72 (18.3)	2.00 (50.8)	0.44 (0.20)
5	12	2.81 (71.4)	1.43 (36.3)	1.69 (42.8)	1.97 (49.9)	0.89 (22.6)	2.37 (60.3)	0.7 (0.32)
6	30	3.25 (82.6)	1.74 (44.3)	1.96 (49.8)	2.35 (59.7)	1.14 (28.9)	2.81 (71.4)	1.1 (0.50)
7	56	3.68 (93.5)	1.94 (49.2)	2.28 (57.8)	2.70 (68.4)	1.14 (28.9)	3.12 (79.4)	1.7 (0.77)
8	100	4.03 (102.4)	2.30 (58.5)	2.58 (65.5)	3.08 (78.2)	1.43 (36.2)	3.56 (90.4)	2.75 (1.25)

Custom versions available upon request.

©2015 Signal Transformer Inc. Specifications subject to change without notice. 07.15

www.signaltransformer.com

500 Bayview Avenue, Inwood, NY 11096
Toll Free 866-239-5777 • Tel 516-239-5777 • Fax 516-239-7208
sales@signaltransformer.com • techhelp@signaltransformer.com

PROCONTROL series 2 plus

TYPE B

Product Specification

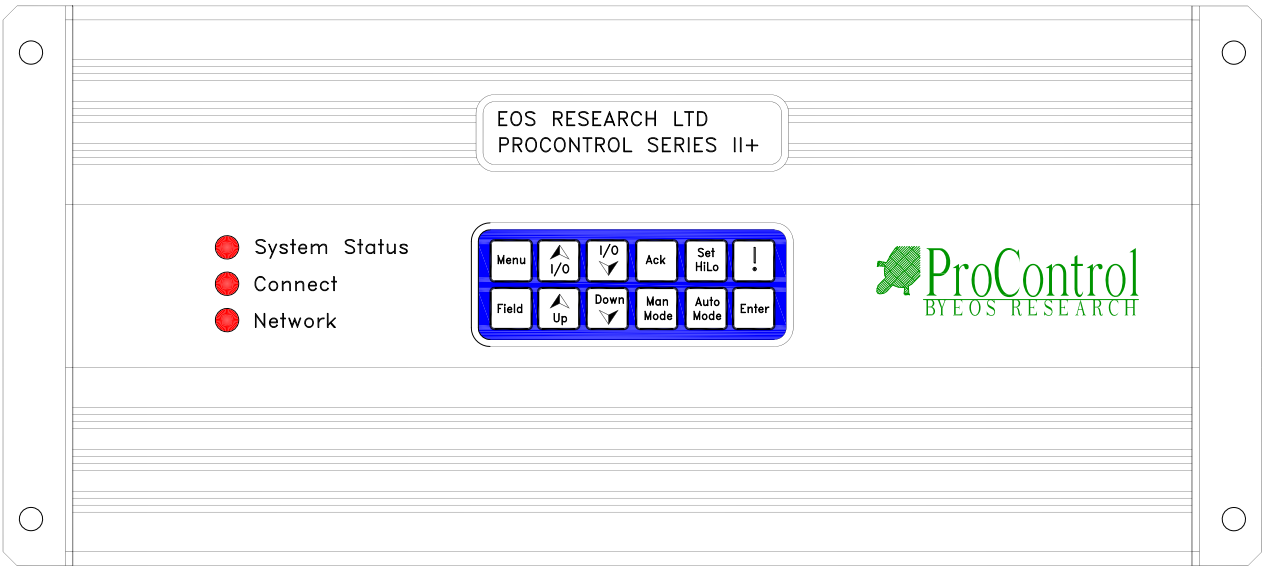

The next generation **Type B** ProControl features a capacity of up to 51 industrially-hardened inputs and outputs in a small and easy-to-use package. The **Series 2**^{plus} contains everything you need for the core of your control/monitoring system, including the ability to connect directly to 120V inputs, and to drive motor starters, solenoids and other devices directly from built-in relay outputs. The **Type B** includes expanded datalogging and reporting capability, a built-in power supply for your instruments and transducers, as well as pluggable connectors for all I/O. It's a truly capable SCADA system for your operation. Available with Ethernet, cellular data modem and analog phone modem communication options.

	Model B1	Model B2
INPUTS		
Discrete	Twelve (12) protected discrete inputs. Support for 4 flowmeters or pulse accumulators with rates to 200Hz.	Fourteen (14) protected discrete inputs. Eight (8) optically isolated inputs. Support for 6 flowmeters or pulse accumulators with rates to 200Hz.
Analog	Eight (8) 4-20ma inputs with built-in 24Vdc supply. Inputs are surge and short-circuit protected and may also be used as discrete inputs	Ten (10) 4-20ma inputs with built-in 24Vdc supply. Inputs are surge and short-circuit protected and may also be used as discrete inputs
OUTPUTS		
Discrete	Fourteen (14) relay outputs rated @ 1A, 120V	Fourteen (14) relay outputs rated @ 1A, 120V
Analog		Five (5) 4-20ma outputs. PID loop control.

Specifications subject to change without notice.

	Model B1	Model B2
DATALOGGING		
Discrete	2,000 points standard. 30,000 points optional. All logging occurs on change of state.	30,000 points standard. All logging occurs on change of state.
Analog	16,000 points standard (2000 per channel). 40,000 points optional.	20,000 points standard (2000 per channel). 50,000 points optional.
Event	2,000 points standard. 10,000 points optional.	2,000 points standard. 10,000 points optional.
Totalizer	50 points per channel	50 points per channel
COMMUNICATIONS		
Ethernet, cellular IP:	ProView™ Software, real-time monitoring from any broadband connection. Alarm and Status Emails, text messaging on alarm	
Analog phone modem:	ProView™ Software, real-time monitoring from any phone line. Alarm and Status fax reports, text/pager messages (email optional)	
ProControl Network:	Optional, can be linked via RS-485 for distributed control or higher I/O counts	
USER INTERFACE		
Display	Rugged LCD (Liquid Crystal Display) 2 x 20 character display	
Keypad	2 x 6 membrane keypad.	
LEDs	LEDs: System Status, Communications Link, Networking	
PROCESS CONTROL		
System	Up to 64 regular system processes total with 16 startup and 16 shutdown processes, specified by easy-to-understand Boolean (IF...THEN) logic	
Alarms	Generate shutdowns, emails, FAX reports and/or text messages.	
Loops	PID loop control (Type B2 only) with user control of setpoint, proportional, integral and derivative gains and max change per calculation. Also open loop proportional algorithm.	
POWER		
System	10VAC, 30VA, external transformer provided	
I/O Supply	24 VDC, 15V and 9V available for powering sensors/instruments.	
ENVIRONMENTAL		
Dimensions	13.5" long x 6" wide x 3.5" high.	
Weight	6 lbs.	
Power Dissipation	25W max.	
Operating Temperature	-20C to +50C	
Humidity	95% R.H. non-condensing	

Crafted in the USA by people who know how to build something to last.

E O S research

159 Walnut Street
Rochester, NH 03867
(603) 332-2099
(603) 332-2727 FAX
www.eosresearch.com

Specifications subject to change without notice.

PROCONTROL

SERIES 2*plus* USER MANUAL

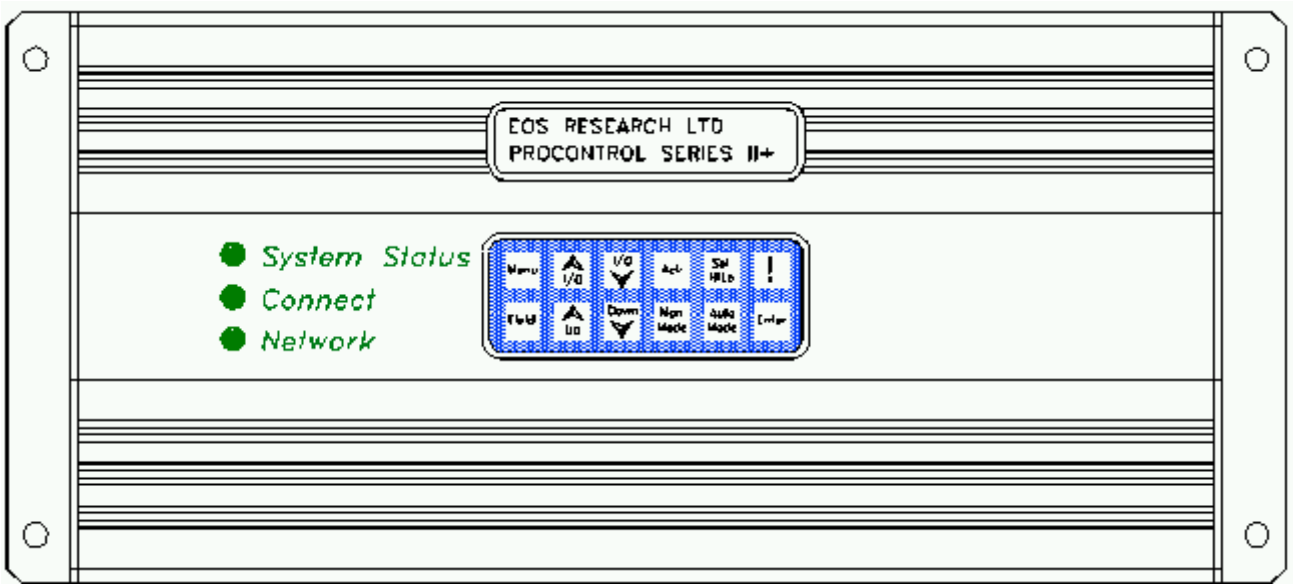

Version 2.X

LIMITED WARRANTY

EOS Research Ltd. (EOS) warrants its products to be free from defects in materials and workmanship for a period of one year from the date of purchase. Its obligation under this warranty is limited to repairing or replacing, at its sole option, any such defective products. This warranty includes parts and labor. This warranty does not apply to equipment which has been damaged by accident, negligence or misapplication or has been altered or modified in any way.

EXCEPT AS PROVIDED HEREIN, EOS RESEARCH LTD. MAKES NO WARRANTIES, EXPRESSED OR IMPLIED, INCLUDING WARRANTIES OF MECHANTABILITY AND FITNESS FOR A PARTICULAR PURPOSE. Some states do not permit limitation or exclusion of implied warranties, therefore the aforesaid limitation(s) or exclusion(s) may not apply to the purchaser.

This warranty gives you specific legal rights and you may also have other rights which vary from state to state.

IMPORTANT SAFETY PRECAUTIONS

Any complex hardware or software may be difficult to document, explain or understand. It is important to consider the consequences or unexpected or abnormal behavior which may be caused by a defect or human failure to comprehend. In order to protect people and property from damage, a thorough safety analysis should always be performed. When the consequences of a failure are serious, it is essential to protect life and property against such a failure with redundant backup systems or safety devices. It is agreed between the purchaser and EOS Research Ltd. that protection against and the consequences of any such failure are entirely the purchaser's responsibility.

This device is not approved for use in life support or medical systems.

As installed, this product may be part of a system which is required to meet various electrical, fire, safety or other codes and regulations. Compliance with these codes is the purchaser's responsibility.

Specifications subject to change without notice.

© 1996-2003 EOS Research Ltd.

EOS Research Ltd.
159 Walnut Street
Rochester, NH 03867
603.332.2099
Fax: 603.332.2727
procontrol@eosresearch.com

TABLE OF CONTENTS

1.0 SYSTEM OVERVIEW 1

1.1 General 1
1.2 Key Concepts 2
1.3 Control Basics 3

2.0 ON-SITE OPERATION 7

2.1 LCD Display 7
2.2 Keypad 9
2.3 Password 10
2.4 Operations Screen 10
2.5 I/O Keys 11
2.6 Digital Input Menu 11
2.7 Digital Output Menu 11
2.8 Analog Input Menu 12
2.9 Analog Output Menu 13
2.10 Menu Key 14
2.11 LED Indicators 17

3.0 REPORTING FEATURES 18

3.1 Fax Report 18
3.2 Page Alerts 23

APPENDIX A - Typical ProControl Wiring

Please see the ProView manual for operation of the remote access software which is supplied with the ProControl Series **2*plus***.

1.0 SYSTEM OVERVIEW

1.1 General

The *ProControl Series* **2**^{plus} is a small but powerful microprocessor based control/ telemonitoring system. By combining a control panel and remote monitor in one unit, the Series **2**^{plus} can act as a central supervisory and data management tool for any stand-alone operation. The *ProControl Series* **2**^{plus} can perform multiple tasks:

- **Stand-Alone Control:** The *ProControl Series* **2**^{plus} is a sophisticated programmable logic controller that will efficiently supervise and control your operation. It can interface with up to 70 electrical devices (float switches, pressure transducers, pH transmitters, flow meters, pumps, blowers, etc.), and execute numerous control functions simultaneously. Automatic shutdown routines can be programmed in to protect you operation during alarm conditions. It is extremely versatile in terms of the control algorithms it can execute.

- **Remote Control and Monitoring:** The *ProControl Series* **2**^{plus} gives you a window into your operation from any remote location, using the easy-to-use Windows-based software supplied with the system. You communicate with the ProControl over a modem link, which allows you to view all of your system's operating conditions, while also providing the same access to control functions that you would have if you were at the site (e.g., turning pumps on and off, adjusting alarm setpoints, etc.). No other telemonitoring device gives you the ProControl's level of remote control capability.

- **Reporting:** The *ProControl Series* **2**^{plus} will keep you informed. It will send you periodic fax status reports of your project operations on a schedule specified by you, and will alert you immediately either by fax or by numeric or alpha-numeric pager if an alarm condition warrants attention. No longer do you have to assume what's happening at your remote operation.....the ProControl will tell you exactly.

- **Datalogging:** The *ProControl Series* **2**^{plus} is your information manager. It is a powerful datalogger that automatically records all operating conditions in its battery-backed memory. You can access your logged data remotely at any time, and download it to your office computer for further processing. The datalogging capability is an invaluable tool for reporting purposes, troubleshooting, and trend graphing.

One or more of these features can be used in your installation; they are standard in every ProControl unit.

1.2 Key Concepts

The following are the building blocks of any Series **2**^{plus} monitoring and control system.

Inputs and Outputs (I/O's)

No system can be effective in the real world without communication and one of the principal ways the ProControl communicates is by responding to information collected by sensors and by issuing "commands" to other electronic or electrical devices. Sensor information constitutes an *Input* while a "command" to another device constitutes an *Output*. The Series **2**^{plus} works with all of the more important types of I/O devices in general use. Appendix A demonstrates how a variety of I/O devices are connected to the ProControl.

Digital Inputs

These inputs are designed to detect the closure of switch contacts such as those found on float switches or overpressure sensors. They can respond to any normally open or normally closed dry contact. The Series **2**^{plus} provides its own wetting (supply) voltage of 5 volts DC for each digital input circuit. The Series **2**^{plus} can respond to changes in state as fast as 4 Hz or 3 Hz (cycles per second) depending on the model purchased. Digital inputs are "debounced" for 125 or 150 milliseconds, respectively. This means that a switch or other input that changes state (becomes open or closed) must stay in that state for 125 or 150 milliseconds before the Series **2**^{plus} will respond to the change.

Eight high-speed digital inputs can also be used for traditional digital (pulse-output) flow meters. These inputs can detect signal changes at up to a 200/500 Hz rate. All high-speed digital inputs are "debounced" for 1250/500 microseconds. The faster rate applies only to those systems containing the 18.432 MHz processor.

Analog Inputs

These inputs are compatible with sensors which send out a 4 - 20 milliamp (mA) signal. Most analog sensors are available with this type of signal, examples being pressure transducers, pH transmitters, and many flow meters. These inputs allow the operator to read the actual "value" of a parameter, such as pressure, instead of an on/off signal.

Digital Outputs

Digital outputs turn things like pumps, solenoid valves, and alarm lights on and off. The Series **2**^{plus} digital outputs are relay outputs designed to switch small loads directly, such as motor starters, lamps, and solenoid valves.

Analog Outputs

Analog outputs are typically used in process control schemes where a controlled piece of equipment can accept a signal which is variable over a range. This output is expressed as a percentage (0 - 100%) and is used to control pump speeds, chemical dosing rates, etc., instead of conventional on/off operation. The equipment that the ProControl sends the analog output to must accept a 4 - 20 mA signal. Often, an analog output is used in conjunction with an analog input such as a pH transmitter to form a control scheme known as *feedback control*. In essence, the input and output will work together to maintain a user set input level. This concept is described further in the next section under *Analog Output Processes*.

Tagnames

Each input and output is given a descriptive *Tagname* by the user that uniquely identifies it to the system operator. For instance, a digital input could be called "TANKHI", an analog input could be called "AIRFLO" and a digital output could be called "PUMP_1". This tagname is used by the local LCD display, the FAX report and by the ProView software. The analog inputs are also given a *Units Tagname* which identifies the unit of measure associated with the input sensor. Each tagname can be up to six characters long and each units tagname can be up to three characters long ("PSI", for instance). The tagnames can include the uppercase letters A-Z, the numbers 0-9, a blank space, and the underscore (_) character.

1.3 Control Basics

The status of all inputs or outputs can easily be monitored both locally and remotely. What gives the Series **2*plus*** its real power, however, is the ability to automatically initiate actions based on the status of the inputs and your pre-programmed instructions (this is often called *Process Control*). These actions can include switching certain outputs, faxing back a report, sending an alphanumeric or numeric page, shutting down the entire system or sounding the local alarm. Process control functions are programmed into your ProControl by EOS Research or one of our technology partners according to your specifications.

Active State

Central to the use of control on the Series **2**^{plus} is the concept of *Active State*. Each input on the ProControl receives certain signals from a sensor which constitute "normal" operation and other signals which constitute an exception to normal operation.

A digital input can monitor only two states, ON or OFF (alternatively, CLOSED or OPEN). The *Active State* would be the state in which the controller would respond to the digital input, and perform certain actions or generate an alarm. For example, if a high level float switch in a tank is tripped (turned ON) by rising fluid level, we can say that its *Active State* correlates to a situation in which the fluid level is high. The active state of the float switch could cause the Series **2**^{plus} to trigger an alarm, turn off a pump, or initiate some other action. The Series **2**^{plus} can be set up so that either ON or OFF is the active state.

An analog input sensor can take on many states (or values) between the minimum and maximum of its measurement range. The ProControl operator, however, can set two threshold values which divide the total input span into two functional regions. These threshold values are more commonly called the *Low Alarm Limit* and the *High Alarm Limit*, although on the Series **2**^{plus} these thresholds are somewhat more flexible in use than those names imply. An analog input which has transcended either its Low Alarm Limit or High Alarm Limit is said to be in its active state.

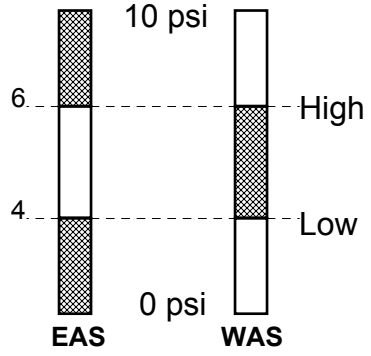

Figure 1. Active State

For instance, consider an analog input sensor which measures pressure from 0 to 10 PSI. The system operator could set the low limit to 4 PSI and the high limit to 6 PSI. In this case the *Active State* would usually be considered as the input state greater than 6 PSI or less than 4 PSI. This interpretation is called *Endpoint Active State* (EAS) on the Series **2**^{plus} because the endpoints of the range are the areas which need to trigger action or generate alarms. The opposite interpretation is also possible and is called *Window Active State* (WAS). Any input values between 4 PSI and 6 PSI would trigger action or generate alarms.

If the ProControl has *Alarms Set*, when any input enters its active state, a local beeper will sound on the ProControl. The word *Alarm* here applies only to the sounding of a local beeper and is not associated with any process control. The active state condition is indicated on the LCD display and can be acknowledged by the operator. The beeper is silenced when it has been acknowledged or after 30 seconds have elapsed. The beeper only operates when the system is operating in Manual mode.

Startup Sequence

The *Startup Sequence* is a series of control algorithms or steps which run in succession and which are designed to place the system in its normal operating mode. It can be as simple as turning all the outputs on simultaneously, or as complex as a multi-stage delay with many conditions. Up to 8 or 16 individual startup steps can be declared depending on the model of the controller. The ProControl can be configured to automatically run this sequence when the unit is powered up.

Process Tasks

A *Process Task* is an ongoing control algorithm which runs continuously. Think of each process task as an IF-THEN statement, in which an action is initiated if a certain condition or combination of conditions exists. Some examples are:

- IF Tank Level Sensor 2 is on, THEN turn Pump 2 off
- IF Air Flow Rate < 10 cfm AND Reactor Temperature > 250°, THEN open Bleed Valve 2

Up to 16 or 64 separate process tasks can be run simultaneously depending on the model of the controller. Process tasks can trigger FAX reports, pager alerts, and system shutdowns.

Shutdown Sequence

The *Shutdown Sequence* is a series of control steps which run in succession and which are designed to shut your system down in a manner which is best for the equipment or treatment processes involved. The shutdown sequence can be activated manually or automatically due to an alarm condition. Here is a typical shutdown sequence:

- Turn off Well Pumps 1 and 2
- Wait 5 minutes, then turn off Stripper Blower
- Open Bleed Valve 2
- When Oxidizer Temperature < 150°, turn off SVE Blower

Automatic Operation

The use of the startup sequence, process tasks, and the shutdown sequence constitutes *Automatic Operation* of your system with the ProControl Series $\mathbf{2}^{plus}$ (otherwise known as *Auto Mode*). The Series $\mathbf{2}^{plus}$ will be placed into auto mode (automatically) when your system has been started up using the programmed startup sequence. If one condition of the programmed startup sequence is not met during the startup process, your system will be completely shut down by the ProControl as a safety measure. Once the startup sequence has been successfully completed, the ProControl begins running the process tasks continuously. **PROCESS TASKS WILL RUN ONLY WHEN IN AUTO MODE**. Please note that the audible beeper will not sound even if the ProControl has *Alarms Set* when it is in Auto Mode, since the process tasks will control these situations as the user has specified.

Manual Operation

You can override the Series **2**^{plus} programmed control functions by operating in *Manual Mode*. In manual mode, your process will respond only to operator input from the keypad of the ProControl, or to commands issued from the ProView software. **PLEASE NOTE THAT PROCESS TASKS AND THEIR ERROR-CHECKING MECHANISMS DO NOT RUN DURING MANUAL MODE!** Manual mode is useful when you wish to troubleshoot your system, but none of the system safeguards built into auto mode are available. You can place your operation into auto mode any time by issuing the command from the keypad.

Analog Output Processes

In some cases, you may want to use an analog output to control equipment that maintains an analog input at a certain constant level. For example, you may wish to automatically maintain a pH of 8.5 in a reaction tank by varying the dosing rate of a chemical feed pump. The pH you wish to maintain (8.5) is called the *SetPoint* of the analog output process. An analog input to the ProControl (in this case, a pH transmitter) is said to provide *feedback* to the unit, and combined with an analog output, constitute *feedback control*.

PID Loops

A reliable type of feedback control can be obtained through a *PID Loop*. PID stands for *Proportional-Integral-Derivative*, and is a commonly-used process control technique. We'll skip the details of the mathematics involved, but suffice it to say that a PID loop is the favored control technique for most analog output processes. With only a *Proportional* term applied in the equation, the analog output is controlled based on an error signal generated from the difference between the SetPoint and the actual analog input. The PID loop can also improve its performance as it continues to run if an *Integral* term is used and can respond to quick changes in the controlling analog input if a *Derivative* term is used. EOS Research will configure your PID loops for you and can provide further information if necessary.

Proportional Outputs

In some cases, it may be desirable to base an analog output signal on an analog input value. In this situation, no specific SetPoint is used because there is a direct relationship between the output and input values. For example, if you wanted to base the output of a metering pump on some flow rate, you might use a proportional output to relate the amount of chemical metered to the flow rate.

2.0 ON-SITE OPERATION

2.1 LCD Display

If your unit did not come with an LCD display, the following sections *do not* apply.

The 2 line x 20 character LCD display is used to display and control system operations. The display is divided into separate areas or fields, as outlined below.

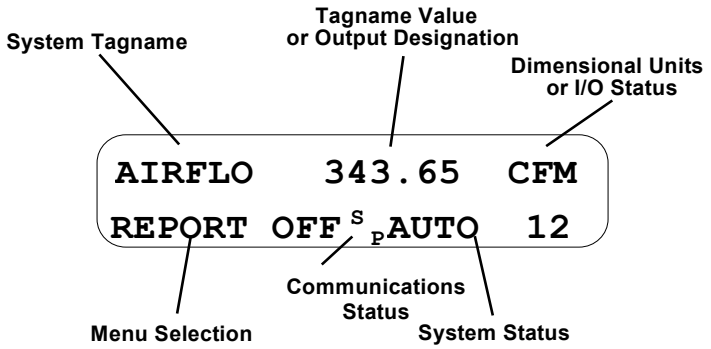

Figure 2. Display Fields

System Tagname This six-character field is used to identify the I/O point displayed. Descriptive names such as WELL1 or BLOWER are used.

Tagname Value For analog inputs, this field displays the value of the input, the high alarm limit, or the low alarm limit. For digital outputs, OUTPUT is displayed. For digital inputs, this field is unused. For analog outputs, this field displays the output percentage, the output level, or the associated input setpoint.

Dimensional Units or I/O Status For analog inputs, this three-character field displays the dimensional units associated with the input sensor, such as GPM or PSI. For digital inputs and outputs, this field displays either ON or OFF. For analog outputs, this field abbreviates percent with PCT. In the case of digital outputs, if the particular output displayed has been designated a lamp output (*see ProView manual*), and a lamp test is currently running, an asterisk (*) will appear before ON or OFF to indicate the lamp is illuminated despite the indicated output status (the output will return to this indicated status once the lamp test has been completed).

Menu Selection This field displays the current menu selection.

Communications Status This field displays one of five different descriptors which indicate any of several special functions of the ProControl. If no communications action is being taken, ">" will appear. Communications messages include: **SP** (Sending Page) - indicates that the unit is attempting to send either an alphanumeric or numeric page; **EF** (Encoding Fax) - indicates that the unit is presently encoding a facsimile report as a result of a request by either the operator or the unit itself; **SF** (Sending Fax) - indicates that the unit is attempting to send a fax report; and **DC** (Data Communications) - indicates that the unit is presently interfaced with ProView.

System Status This area displays the current system status: AUTO, MANUAL, START, or SHUTD and an associated process task number indicating the last successfully completed Auto process, current Startup process, or current Shutdown process.

2.2 Keypad

The Series 2^{plus} keypad contains 12 buttons which are used along with the LCD Display to control the operations of the system.

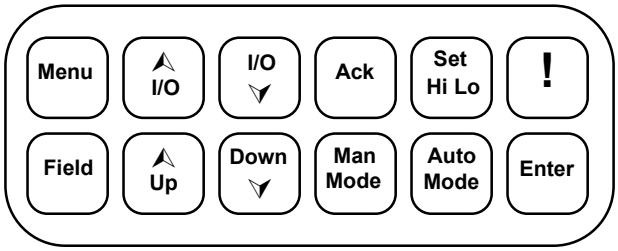

Figure 3. Series 2^{plus} Keypad

This key is used to scroll through a series of options which are displayed on the LCD screen, and which allow the user to configure various aspects of system behavior.

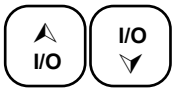

These keys are used to display information about particular I/O points on the LCD Screen. The keys allow the user to scroll through all of the system I/O points either forward or backward.

The Acknowledge key is used to silence the audible beeper or to acknowledge a memo sent from a remote ProView user.

The Set Hi Lo key allows the user to change the high and low alarm limits for analog inputs or to toggle the display in the I/O Summary.

The Emergency Shutdown key is used to turn off all outputs and return the system to manual mode. The programmed shutdown sequence is <u>not</u> executed using this key.

The Field key is used to select a character position to be edited. It is used in conjunction with any direct alphanumeric entry.

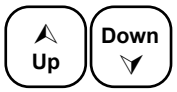

These keys are used to toggle system variables from one state to the next or to scroll through possible character entries when used in conjunction with the Field key.

This key is used to place the system in manual mode.

This key is used to place the system in auto mode.

The Enter key is used to initiate certain actions selected by other keys or to confirm alphanumeric editing done using other keys.

2.3 Password

When the system is first turned on the password screen is displayed and the user is prompted to enter the password to gain access to the system. "EOS" is the default password. The password on the Series **2**^{plus} was designed as a *low-level* security feature. It is not sufficient in and of itself to withstand a determined effort at system entry. The ProControl unit can be configured to bypass the password screen when the unit is powered up.

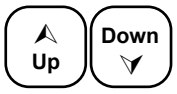


```
CUSTOMER ID TAGNAME
ENTER PASSWORD: BAA
```

Use the Up and Down keys to change the character displayed above the cursor.

```
CUSTOMER ID TAGNAME
ENTER PASSWORD: BAA
```

The Field key is used to move the cursor to the next character to be edited.

```
CUSTOMER ID TAGNAME
ENTER PASSWORD: EOS
```

The enter key submits the password for approval.

If the password was entered correctly, the following screen will be displayed for about a second before the operations screen is displayed:

```
Password Accepted
VER 2.XXX    : 1
```

ROM Version # — User Setup Version #

Otherwise, the following message will be displayed for a second and the user will be returned to the password menu:

```
Incorrect Password
```

2.4 Operations Screen

After the password has been entered correctly, the operations screen is displayed. The operations screen allows the user to set system parameters and to review the status of all system inputs and outputs.

```
WELL1              OFF
ALARMS SET >MANUAL
```

2.5 I/O Keys

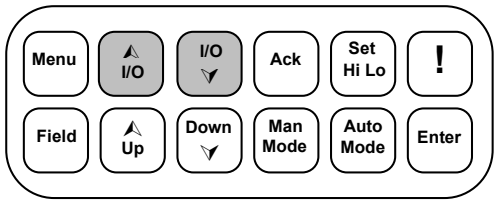

Pressing the I/O Up or I/O Down keys will scroll through the operational I/O points in the system. Data relevant to a particular I/O point will be displayed to right of the point's Tagname.

I/O

```
WELL2                ON
ALARMS SET >MANUAL
```

Forward scroll through I/O points

I/O

```
WELL3                OFF
ALARMS SET >MANUAL
```

Forward scroll through I/O points

I/O

```
WELL2                ON
ALARMS SET >MANUAL
```

Backward scroll through I/O points

2.6 Digital Input Menu

Input Tagname — Input Status

```
WELL2                ON
ALARMS SET >MANUAL
```

A digital input displayed in the operations screen will be displayed as shown. When the input is in its Active State "ON" will be displayed in the Input Status area. Otherwise, "OFF" will be displayed.

2.7 Digital Output Menu

Output Tagname — Lamp Status — Output Status

```
PUMP1     OUTPUT *OFF
ALARMS SET >MANUAL
```

A digital output displayed in the operations screen will appear as shown. When the output has been turned on, "ON" will be displayed in the Output Status area. Otherwise, "OFF" will be displayed. The cursor is displayed under the first character in the status field to indicate that it can be changed. The Lamp Status character (*) will be shown for a lamp output if a *lamp test* is running regardless of the output's true state.

Up Down

```
PUMP1     OUTPUT  ON
ALARMS SET >MANUAL
```

Pressing the Up or Down key will toggle the digital output state and turn the corresponding relay OFF or ON.

Field

```
PUMP1     OUTPUT  ON
ALARMS SET >MANUAL
```

Pressing the Field key will move the cursor to the Menu selection field.

2.8 Analog Input Menu

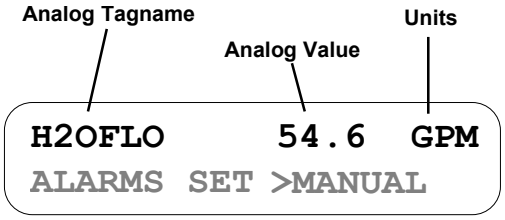

An analog input displayed in the operations screen will be displayed as shown to the left. The value of the analog input will be shown along with the dimensional units. In the case of a pulse accumulator (totalizer only), you will see only TOT where units is normally displayed.

Set Hi Lo

Use the Set Hi Lo key to set the low alarm limit.

Set Hi Lo

Press the Set Hi Lo key again to set the high alarm limit.

Set Hi Lo

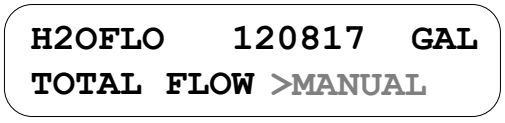

Press the Set Hi Lo key again to see the total flow on a flow type input, and once more to return.

Up Down

The Up and Down keys are used to change the value of the current character, as denoted by the cursor.

Field

The Field key is used to move to the next character to be edited.

Enter

To save the low alarm limit changes, press the enter key.

2.9 Analog Output Menu

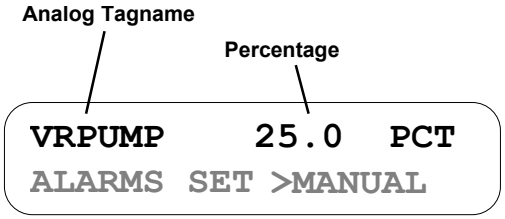

An analog output displayed in the operations screen will be displayed as shown to the left. The percentage of full scale output will be displayed as well.

Set Hi Lo

The Set Hi Lo key can be used to set the output percentage.

Set Hi Lo

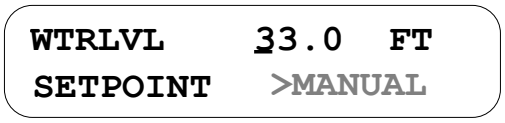

Press the Set Hi Lo key again to declare the SetPoint of an associated analog input. The SetPoint is used only if a PID control loop is in use as an analog output process.

Pressing Set Hi Lo again returns to the original menu.

Up Down

The Up and Down keys are used to change the value of the current character, as denoted by the cursor.

Field

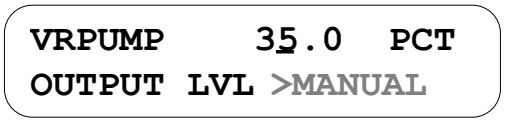

The Field key is used to move to the next character to be edited.

Enter

To save the output level changes, press the enter key.

2.10 Menu Key

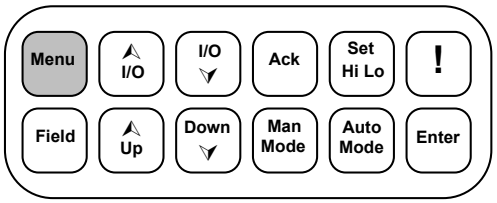

When pressed, the Menu key will scroll through a series of items which allow the user to configure various aspects of system behavior. A description of these items appear in a 10 character field at the bottom left of the display. Either the Up and Down keys or the Enter key is used to change the item.

ALARMS Use the Up and Down keys to enable or disable Alarms.

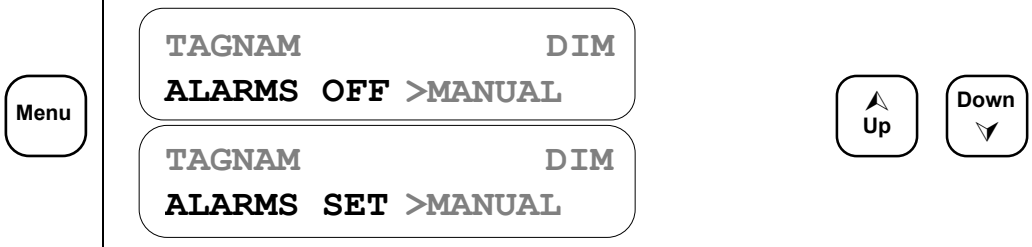

REPORT Use the Up and Down keys to enable or disable the unit's reporting capabilities (fax or page).

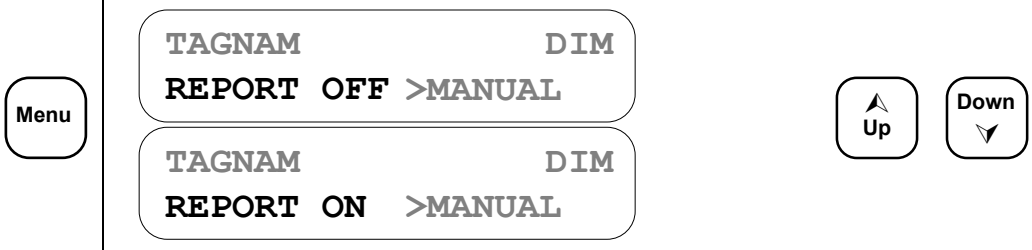

FAX NOW Use the Enter key to send a FAX report immediately.

STARTUP Use the Enter key to run the Startup Sequence.

SHUTDOWN Use the Enter key to run the Shutdown Sequence.

LAST SHUTDOWN This display item shows what input or output caused the last shutdown.

LOG OFF Use the Enter key to Log Off the system and return to the password menu.

LAST MEMO Use the Enter key to see the last memo sent from the remote ProView user. Up and Down are used to scroll through the message, and Ack is used to return to the ProControl menus. If you hit any other key you will see an informative message telling you which keys are valid. The message will be displayed for 3 seconds if no keys are pressed, but can be acknowledged before the 3-second period by pressing either the Ack or Enter keys.

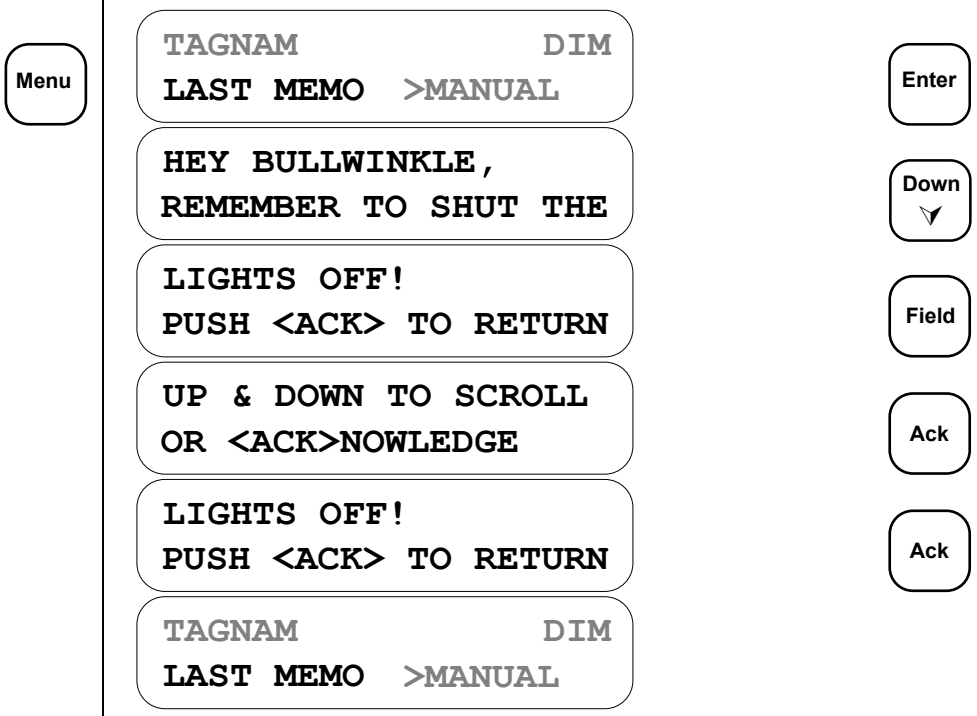

IO SUMMARY

Use the Enter key to enter the I/O summary. The analog input values 0-10 represent a percentage of full scale (i.e. 0 ≅ 4 mA, 5 ≅ 12 mA). Set HiLo is used to toggle between input/output summaries. An underscore represents an open input or an unswitched output. A block indicates a closed input or a switched output. An **x** or **X** is displayed when an output is not enabled and is unswitched or switched, respectively. An asterisk (*****) will be displayed if an output is declared as a lamp and a lamp test is currently being performed. The Field key can be used to move the blinking cursor through the outputs. The Up/Down keys can be used to toggle the state of the output whose position is covered by the blinking cursor. The Enter key will return the ProControl back to its standard menus. If you press any other keys you will see an informative message telling you which keys are valid. The message will be displayed for 3 seconds if no keys are pressed, but can be interrupted before the 3-second period by pressing the Enter key.

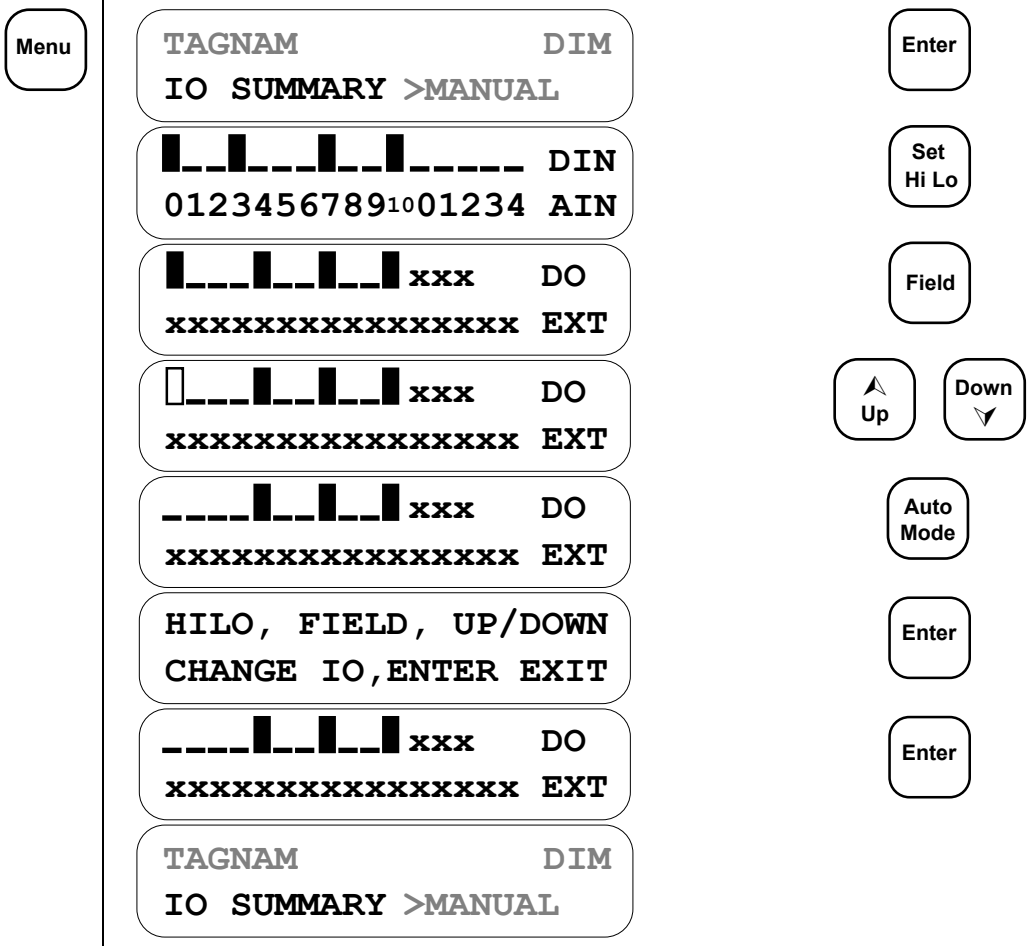

MODES Use the Up and Down keys to toggle an Analog Output from Manual control to PID control or Proportional control, depending on which analog output process is being used. This selection will only appear if an analog output tagname is displayed and the analog output is part of an analog output process.

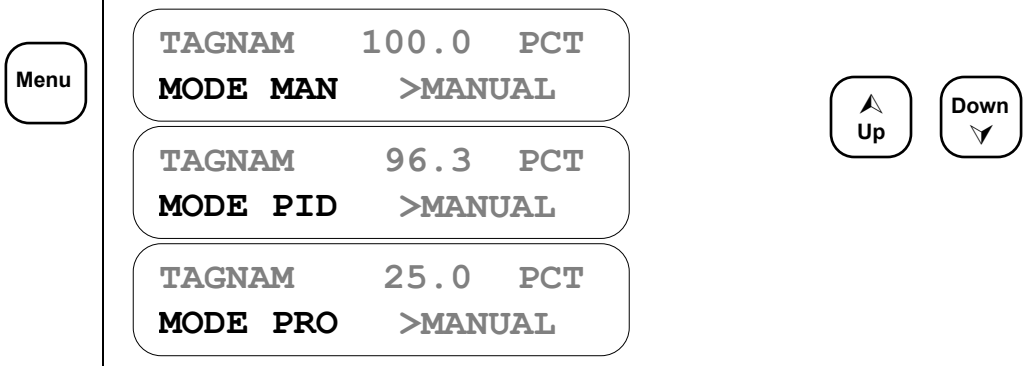

GROUP The ProControl allows outputs to be assigned to different *Groups* to allow greater process control flexibility. In some cases, you may wish to be able to specify alternate process tasks for a given output. For instance, you can have the operation of a pump be controlled by a series of level switches in a tank, or alternately, the pump can be run on a timed cycle. By selecting the appropriate process Group, you can change the control strategy for that piece of equipment. EOS Research will configure the groups for you according to your specifications

Use the Up and Down keys to select a Group for the displayed output. This menu item is displayed only for outputs that have been configured by EOS to have alternate process Groups.

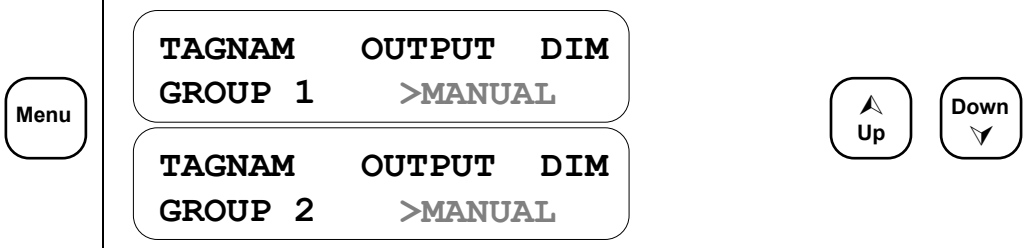

2.11 LED Indicators

Your ProControl unit has three status LEDs to the left of the keypad, which are used to indicate the following:

System Status: Normally ON when unit is powered.
One blink - The system has internally reset.
Two blinks - An internal error has occurred.

Connect: ON if user is remotely or locally connected.
ON if system is faxing or paging.
Slow blink - last fax or page failed, press ACK to clear.
Fast blink - local connect cable inadvertantly left plugged in, press ACK to clear.

Network: Rapid blinking indicates an active network connection.

3.0 REPORTING FEATURES

3.1 Fax Report

The ProControl unit will keep you informed of your system's operations with facsimile status reports. With the supplied ProView software you can configure the unit to send fax reports to up to two different numbers. You can also have these reports sent on a daily basis, at regular intervals during the day, or when triggered by specific process tasks. You can send one at any time by using the *Fax Now* option either from the menu on the ProControl's display, or through the ProView software.

The fax report you receive will contain several fields, each denoted by a shadow box. The number of fields will depend on the configuration of your system. For instance, you would not see a field indicating *Analog Outputs* if your system does not contain any of these.

The fields as you will see them are shown below. All information enclosed in brackets is variable and depends on your particular system configuration.

To:

```
<FAX RECIPIENT>
```

will indicate the intended fax recipient's name.

From:

```
THE <SYSTEM NAME>          SYSTEM IN <SITE LOCATION>    AT <TIME> ON <DATE>
SETUP VERSION X       :    ROM VERSION 2.x          :   MODEL B1
```

will indicate the name and location of your system, the date and time at which the fax report was initiated, your current ProView setup version, and the current on-board software version 2.X.

```
<MODE><PXX>  :   LAST SHUTDOWN AT <TIME> ON <DATE> BY <SHUTDOWN CAUSE>
                 FAX REPORT INITIATED BY <FAX CAUSE>
```

will indicate the current <MODE> of the controller and associated process. For example, if the controller is running the startup or shutdown sequence, you would see either START or SHUTD followed by the current algorithm. Similarly, in auto mode, you would see AUTO followed by the last successfully completed process task.

The LAST SHUTDOWN indicates when the system last initiated the shutdown sequence and what caused it to happen. For example, if the shutdown sequence were initiated by a key press, the cause you would see would be KEYPAD. Similarly, if the shutdown sequence were caused by a process task such as a high pressure sensor whose tagname was HIPRES, you would see HIPRES as the <SHUTDOWN CAUSE>. If multiple inputs or outputs caused the shutdown (i.e. a process task was dependent on more than one input being in the active state and/or multiple outputs being ON), the most recent one which changed will appear as the cause.

Similarly, the FAX REPORT INITIATED BY line will indicate the tagname of the I/O point which caused the fax to be sent, provided there was only one I/O point responsible. If multiple I/O points were responsible, the process itself will be indicated. Consider, for example, a process task where a shutdown was caused by HIPRES and BLOWER, and a fax was also generated. The <FAX CAUSE> would be PROCESS XX, where *XX* is the number from 1 - 64 of this process task. In the case where *Fax Now* was selected from the menu option on the LCD, the <FAX CAUSE> would be KEYPAD. The <FAX CAUSE> from a ProView generated *Fax Now* command would be REMOTE. This line will <u>not</u> appear on daily or interval scheduled fax reports.

Discrete Inputs:

```
<TAGNAME> is <STATE>   <TAGNAME> is <STATE> ...
```

will indicate the status of all of the digital inputs in four columns. Inputs which are in the active state will appear as ON and those which are in their normal state will appear as OFF.

Discrete Outputs:

```
<TAGNAME> is <STATE>   <TAGNAME> is <STATE> ...
```

will indicate the status of all of the digital outputs in four columns.

Analog Inputs:

```
<TAGNAME> is <VALUE> <DIM> LIMITS are L: <LO-LIM> <DIM> H: <HI-LIM> <DIM>
<TAGNAME> is <VALUE> <DIM> TOTAL FLOW is <FLOW>   <DIM>
<TAGNAME>                  TOTAL FLOW is <FLOW>   <DIM>
...
```

will indicate the current value, dimensional units, low alarm limit, and high alarm limit for all analog inputs which are not flow-type inputs. The precision of the values displayed can be selected through ProView. Any flow-type analog input which is responsible for maintaining a total flow will display that flow in place of the alarm limits. Any pulse-type digital input used for a digital flow meter will appear here since the information being obtained by that type of flow meter is analog in nature. In addition, pulse accumulators (volume totalizers) will appear here.

Analog Outputs:

```
<TAGNAME>   <PCT>  PCT  <MODE>      <TAGNAME>   <PCT>  PCT  <MODE>
...
```

will indicate the output percentage and mode of operation of all analog outputs. The precision is fixed to one decimal place and will range from 0.0 to 100.0, expressed as a percentage. The <MODE> of operation will be PID if the analog output is currently being used in a PID loop, or PRO if the analog output is currently being used in a Proportional scheme, otherwise it will be MAN indicating that the analog output is under manual control.

The next two pages contain examples of scheduled and alarm fax reports.

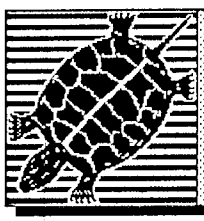

ProControl Series II+

EOS Research Ltd.

Fax Report

To:

BULLWINKLE J MOOSE

From:

THE NORTH WATER SUPPLY SYSTEM IN HAYBERRY USA @ 09:44:00 ON 12/10/1999
SETUP VERSION 1 : ROM VERSION 2.156 : MODEL B2

System Status:

AUTO P04 : NO PREVIOUS SHUTDOWN

Discrete Inputs:

WEL1LO is OFF	WEL2LO is OFF	TWR_HH is OFF	TNK_HH is OFF
RESET is OFF			

Discrete Outputs:

WLPMP1 is ON	WLPMP2 is ON	FINPMP is ON	CHLMET is ON
NAOMET is ON	PH_ALM is ON	CL_ALM is ON	TWRALM is OFF
WL1ALM is OFF	WL2ALM is OFF	TNKALM is OFF	

Analog Inputs:

TWRLVL is	59.2	FT	LIMITS are	L:	8.0	FT	H: 70.0	FT
TNKLVL is	0.00	FT	LIMITS are	L:	8.00	FT	H: 12.00	FT
FINFLO is	501.3	GPM	TOTAL FLOW is		14794	GAL		
FLOW_2 is	399.3	GPM	TOTAL FLOW is		12561	GAL		
FLOW_1 is	0.0	GPM	TOTAL FLOW is		0	GAL		
FIN_PH is	0.00	PH	LIMITS are	L:	6.00	PH	H: 8.00	PH
FIN_CL is	0.00	PPM	LIMITS are	L:	0.75	PPM	H: 2.00	PPM

Analog Outputs:

VSPMP1	86.8 PCT	PID	VSPMP2	100.0 PCT	PID
NAOHFD	100.0 PCT	PID	CHLRFD	20.0 PCT	PRO

ALARM Fax Report

EOS Research Ltd. — ProControl Series II+

To:

BULLWINKLE J MOOSE

From:

THE NORTH WATER SUPPLY SYSTEM IN MAYBERRY USA @ 09:34:12 ON 12/10/1999
SETUP VERSION 1 : ROM VERSION 2.156 : MODEL B2

System Status:

AUTO P04 : NO PREVIOUS SHUTDOWN
FAX REPORT INITIATED BY REMOTE

Discrete Inputs:

WEL1LO is OFF	WEL2LO is OFF	TWR_HH is OFF	TNK_HH is OFF
RESET is OFF			

Discrete Outputs:

WLPMP1 is ON	WLPMP2 is ON	FINPMP is ON	CHLMET is ON
NAOMET is ON	PH_ALM is ON	CL_ALM is ON	TWRALM is OFF
WL1ALM is OFF	WL2ALM is OFF	TNKALM is OFF	

Analog Inputs:

TWRLVL is 59.1	FT	LIMITS are	L: 8.0	FT	H: 70.0	FT
TNKLVL is 0.00	FT	LIMITS are	L: 8.00	FT	H: 12.00	FT
FINFLO is 203.5	GPM	TOTAL FLOW is	11348	GAL		
FLOW_2 is 399.6	GPM	TOTAL FLOW is	8671	GAL		
FLOW_1 is 0.0	GPM	TOTAL FLOW is	0	GAL		
FIN_PH is 0.00	PH	LIMITS are	L: 6.00	PH	H: 8.00	PH
FIN_CL is 0.00	PPM	LIMITS are	L: 0.75	PPM	H: 2.00	PPM

Analog Outputs:

VSPMP1	37.4 PCT	PID	VSPMP2	100.0 PCT	PID
NAOHFD	100.0 PCT	PID	CHLRFD	20.0 PCT	PRO

3.2 Page Alerts

The ProControl unit can alert you to important conditions at your site via a page alert. Any system that is not in manual mode, that is, executing process tasks or the startup or shutdown sequences, can send a message up to eighty characters in length to an alphanumeric pager or up to nineteen digits in length to a numeric pager. If you are out of the office and away from a fax machine, you will still be alerted to any trouble at your site. With ProView you can select up to two pager numbers to be called. Each process task or startup/shutdown algorithm is capable of sending a message to either or both of these pagers. The pager messages are configured by EOS Research according to your specifications.

An example message for an alphanumeric pager would be:

```
ANYTOWN SITE
High water level EQ Tank
System shut down!
Call Fred to fix: 555-6789
```

APPENDIX A

EXAMPLE WIRING DIAGRAM

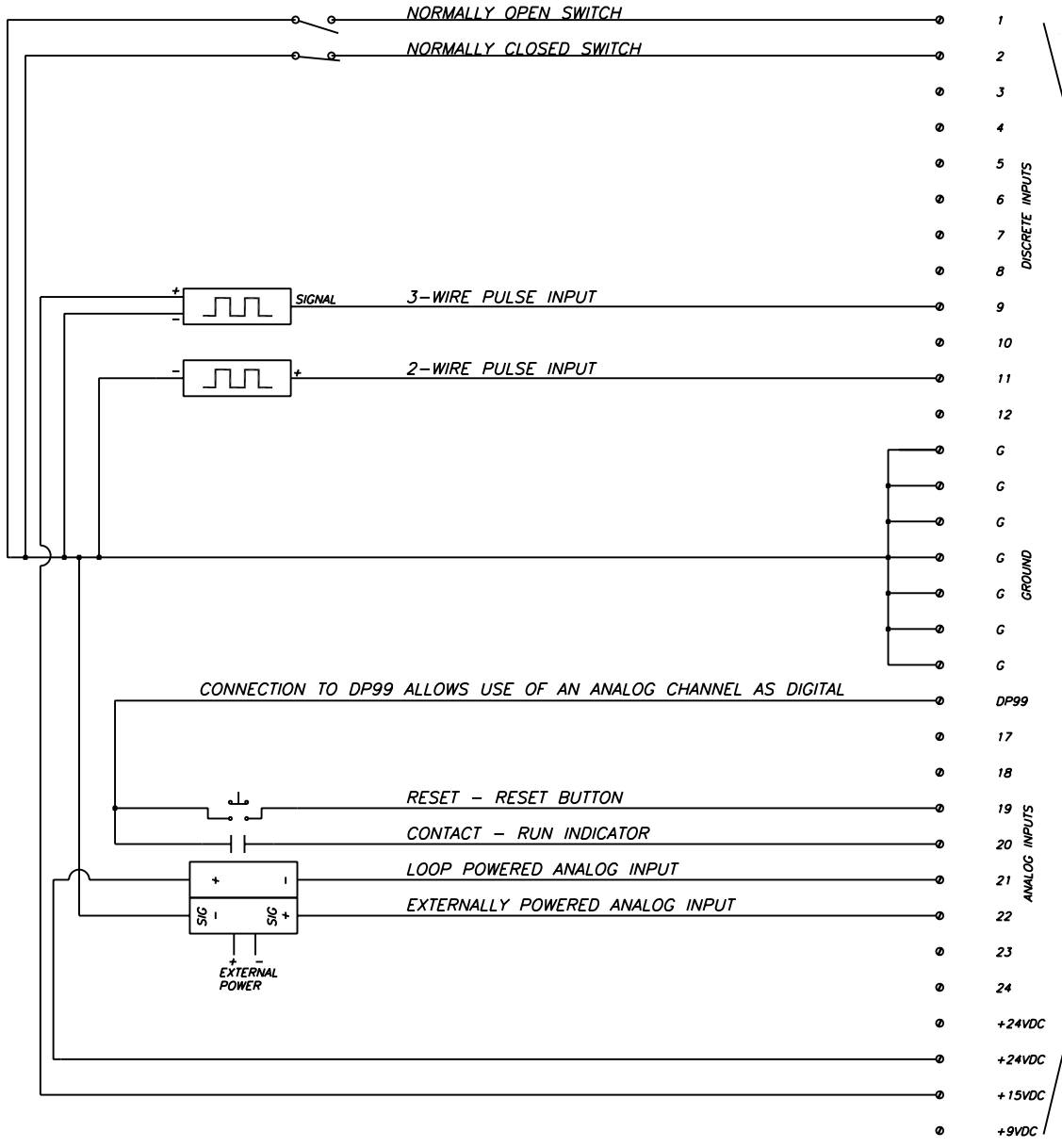

SERIES 2*plus* Type B1-B2, A1-A2

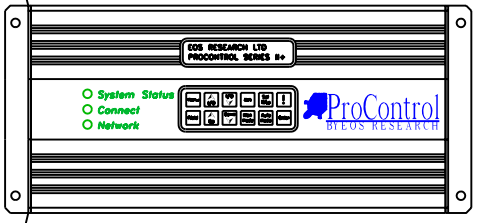

NOTES:
1. FOR ANALOG INPUTS, MAINTAIN VOLTAGE AND TOTAL LOOP RESISTANCE PER MFG. SPECIFICATIONS.
2. INPUT IMPEDANCE FOR SERIES 2Plus ANALOG INPUTS IS 135 OHMS.
3. ACTIVE DISCRETE INPUTS WILL SOURCE 1mA WHEN GROUNDED.
4. THE ProControl SOURCES 5VDC FOR DISCRETE INPUTS.
5. DISTRIBUTE ANALOG INSTRUMENTS EVENLY ACROSS +24VDC TERMINALS.

E O S
research
159 Walnut Street, Rochester, NH

TYPICAL ProControl WIRING
DIGITAL & ANALOG INPUTS - BOTTOM LEFT SIDE

EXAMPLE WIRING DIAGRAM

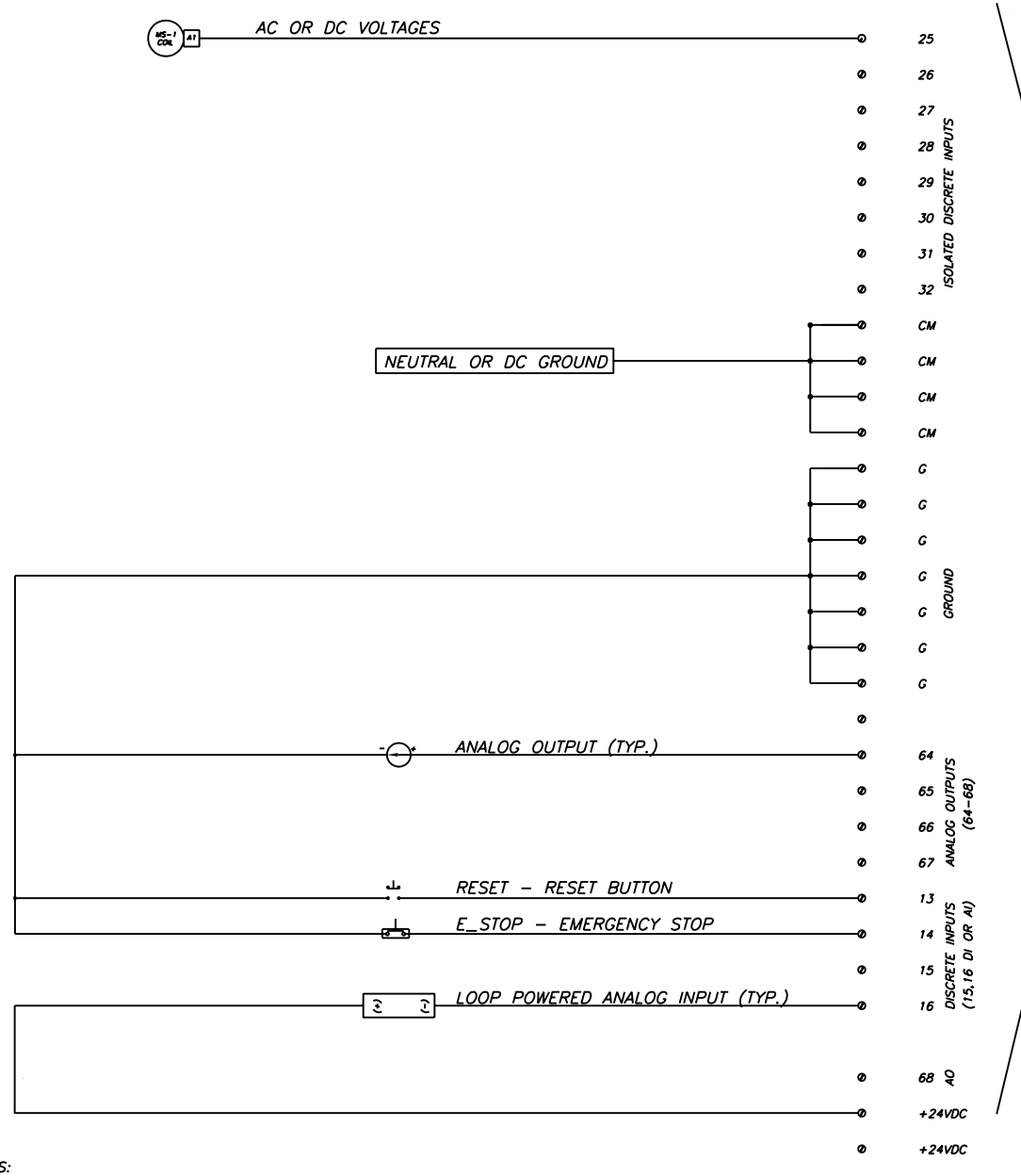

SERIES 2*plus* Type B2 ONLY

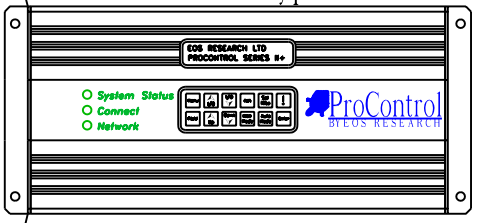

NOTES:
1. FOR ANALOG INPUTS, MAINTAIN VOLTAGE AND TOTAL LOOP RESISTANCE PER MFG. SPECIFICATIONS.
2. INPUT IMPEDANCE FOR SERIES 2Plus ANALOG INPUTS IS 135 OHMS.
3. MAXIMUM ISOLATED DISCRETE INPUT VOLTAGE 120V. ALL INPUTS MUST BE SAME VOLTAGE AND SHARE THE SAME COMMON OR NEUTRAL!
4. CM REPRESENTS COMMON FOR INPUTS 25-32. (ie. 120VAC, CM=NEUTRAL/ 24VDC, CM=DC GROUND)

E O S
research
159 Walnut Street, Rochester, NH

TYPICAL ProControl WIRING
DIGITAL INPUTS & ANALOG OUTPUTS
TYPE B2 - TOP LEFT SIDE

EXAMPLE WIRING DIAGRAM

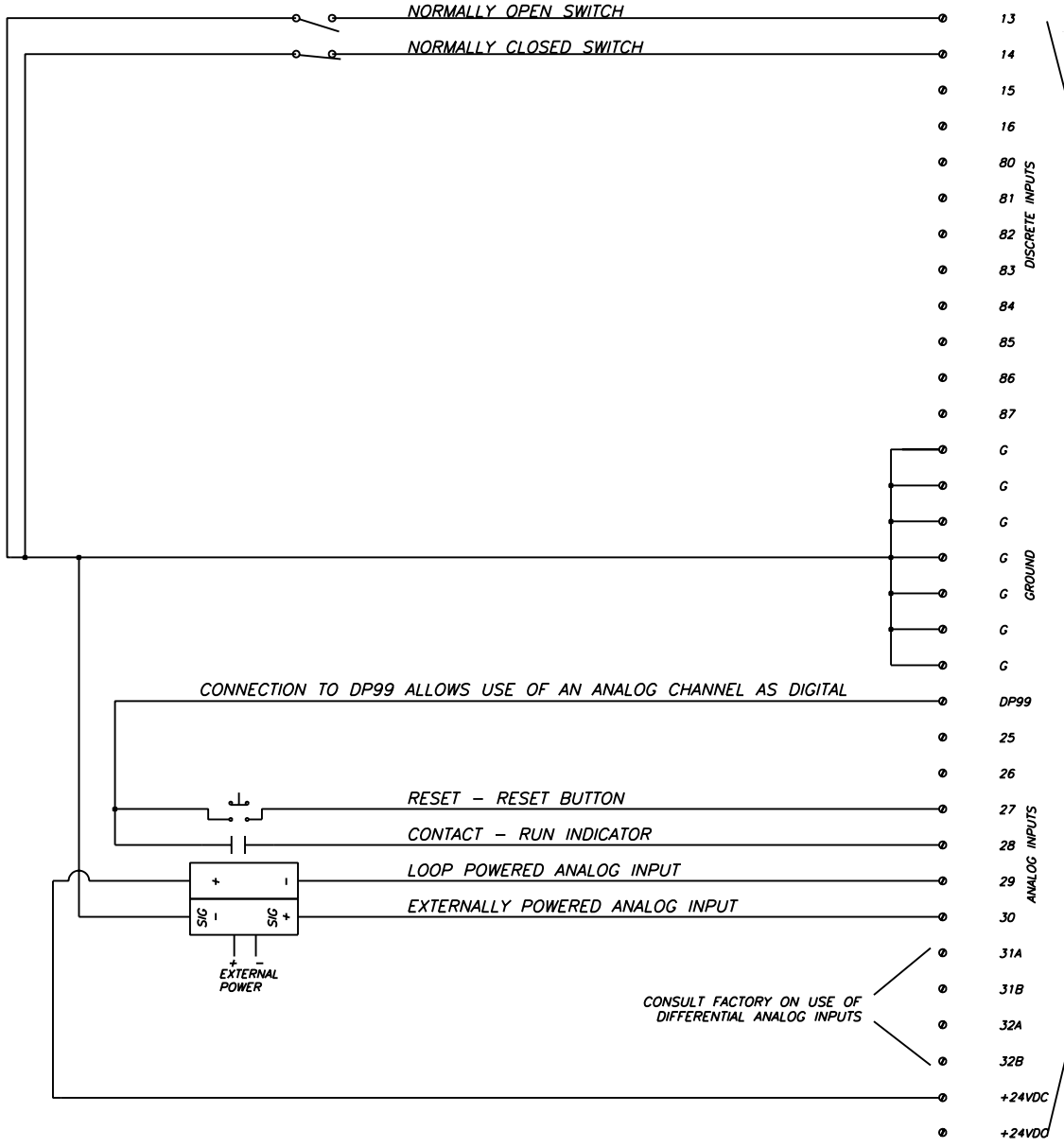

SERIES 2*plus* Type A1-A2

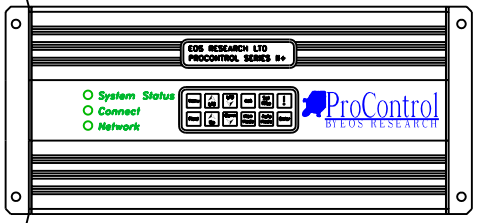

NOTES:
1. FOR ANALOG INPUTS, MAINTAIN VOLTAGE AND TOTAL LOOP RESISTANCE PER MFG. SPECIFICATIONS.
2. INPUT IMPEDANCE FOR SERIES 2Plus ANALOG INPUTS IS 135 OHMS.
3. ACTIVE DISCRETE INPUTS WILL SOURCE 1mA WHEN GROUNDED.
4. THE ProControl SOURCES 5VDC FOR DISCRETE INPUTS.
5. DISTRIBUTE ANALOG INSTRUMENTS EVENLY ACROSS +24VDC TERMINALS.

E O S
research
159 Walnut Street, Rochester, NH

TYPICAL ProControl WIRING
DIGITAL & ANALOG INPUTS -
TYPE A - TOP LEFT SIDE

EXAMPLE WIRING DIAGRAM

SERIES 2*plus* Type B1-B2, A1-A2

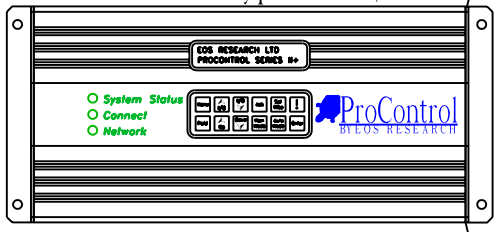

RS-232/SERIAL RJ-45 LOCAL CONNECTION PORT

TEL./RS-485 RJ-11 TELEPHONE/NETWORKING PORT

NEUTRAL LINE GROUND +24VDC

DISCRETE OUTPUTS

46
45 SLNVLV - SOLENOID VALVE
44 AIRCMP - AIR COMPRESSOR — MS-2 COIL
43 DISPMP - DISCHARGE PUMP — MS-1 COIL
42
41
40
CM2 COMMON FOR 40-46
39
38
37
36
35 VACALM - HIGH VACUUM ALARM — R
34 PRSALM - LOW PRESSURE ALARM — R
33 SMPALM - HIGH LEVEL ALARM — R
CM1 COMMON FOR 33-39

INPUT POWER 10VAC

10VAC TRANSFORMER SUPPLIED WITH ProControl UNIT. (REV 4 AND ABOVE)

NOTE: 20VAC-CT TRANSFORMER SUPPLIED PRIOR TO REV 4. DO NOT USE 20VAC TRANSFORMER ON REV 4 AND ABOVE!!

NOTES:
1. OUTPUT RELAYS RATED AT 125VAC/0.5A, 24VDC/0.5A
   UNITS SHIPPED AFTER 12/1/99 RATED AT 125VAC/1.0A, 24VDC/1.0A
2. CM1 IS SWITCHED TO 33-39 AND CM2 IS SWITCHED TO 40-46 WHEN OUTPUT IS ACTIVE.
3. DO NOT USE +24VDC FROM ProControl TO DRIVE OUTPUTS. FOR TRANSDUCER POWER ONLY.

E O S research
159 Walnut Street, Rochester, NH

TYPICAL ProControl WIRING
DIGITAL OUTPUTS - RIGHT SIDE

EXAMPLE WIRING DIAGRAM

SERIES 2*plus* Type A1-A2

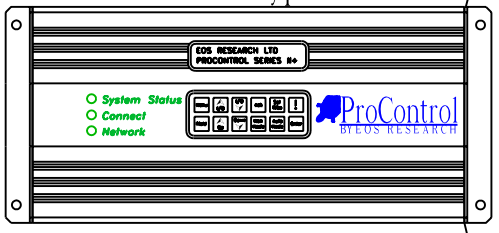

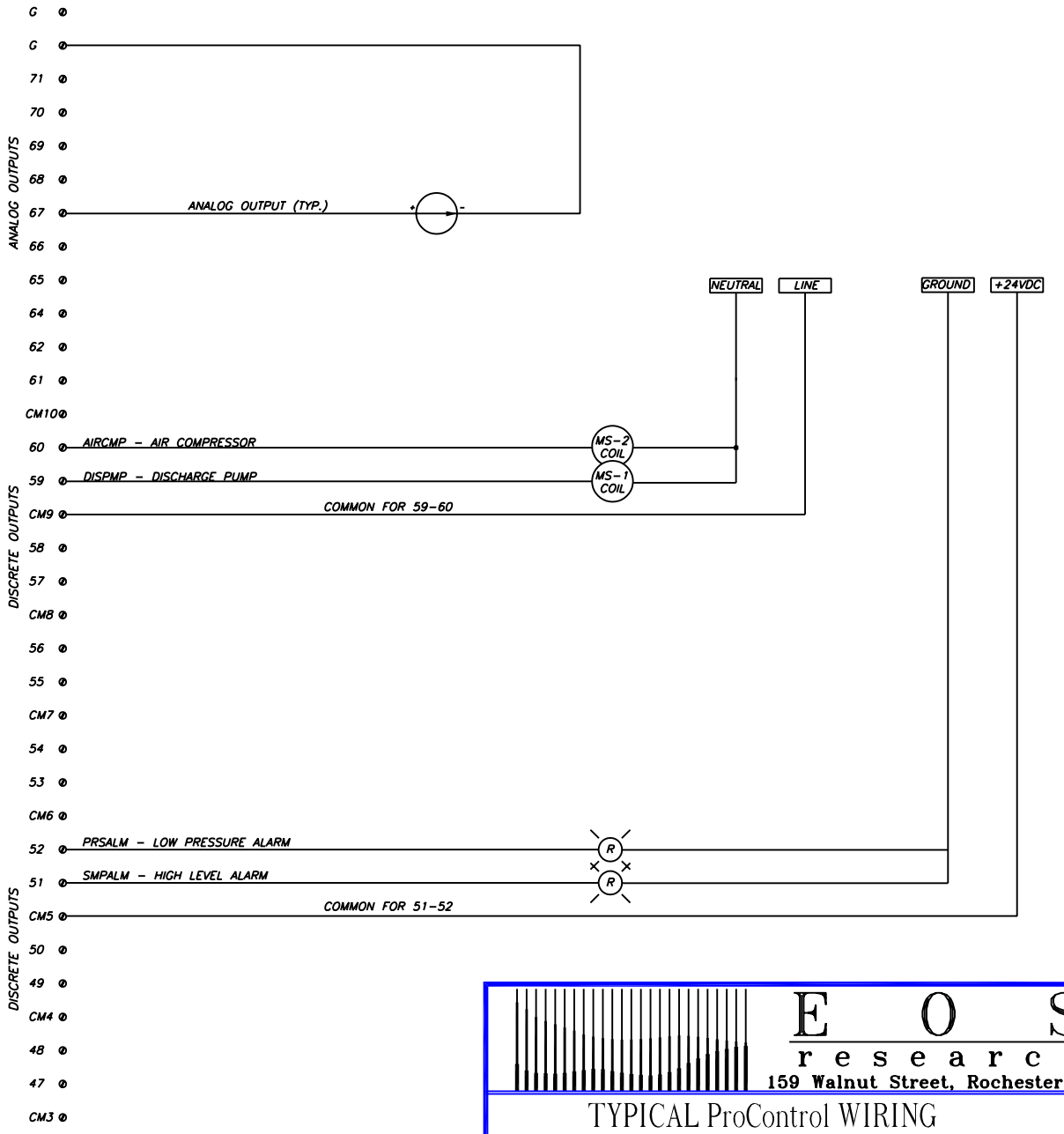

NOTES:
1. OUTPUT RELAYS ARE RATED AT 125VAC/0.5A, 24VDC/0.5A
2. CM3 IS SWITCHED TO 47-48, CM4 IS SWITCHED TO 49-50, ETC. WHEN OUTPUT IS ACTIVE.
3. DO NOT USE +24VDC FROM ProControl TO DRIVE OUTPUTS. FOR TRANSDUCER POWER ONLY.

E O S
research
159 Walnut Street, Rochester, NH

TYPICAL ProControl WIRING
DIGITAL & ANALOG OUTPUTS
TYPE A - TOP RIGHT SIDE

EXAMPLE WIRING DIAGRAM

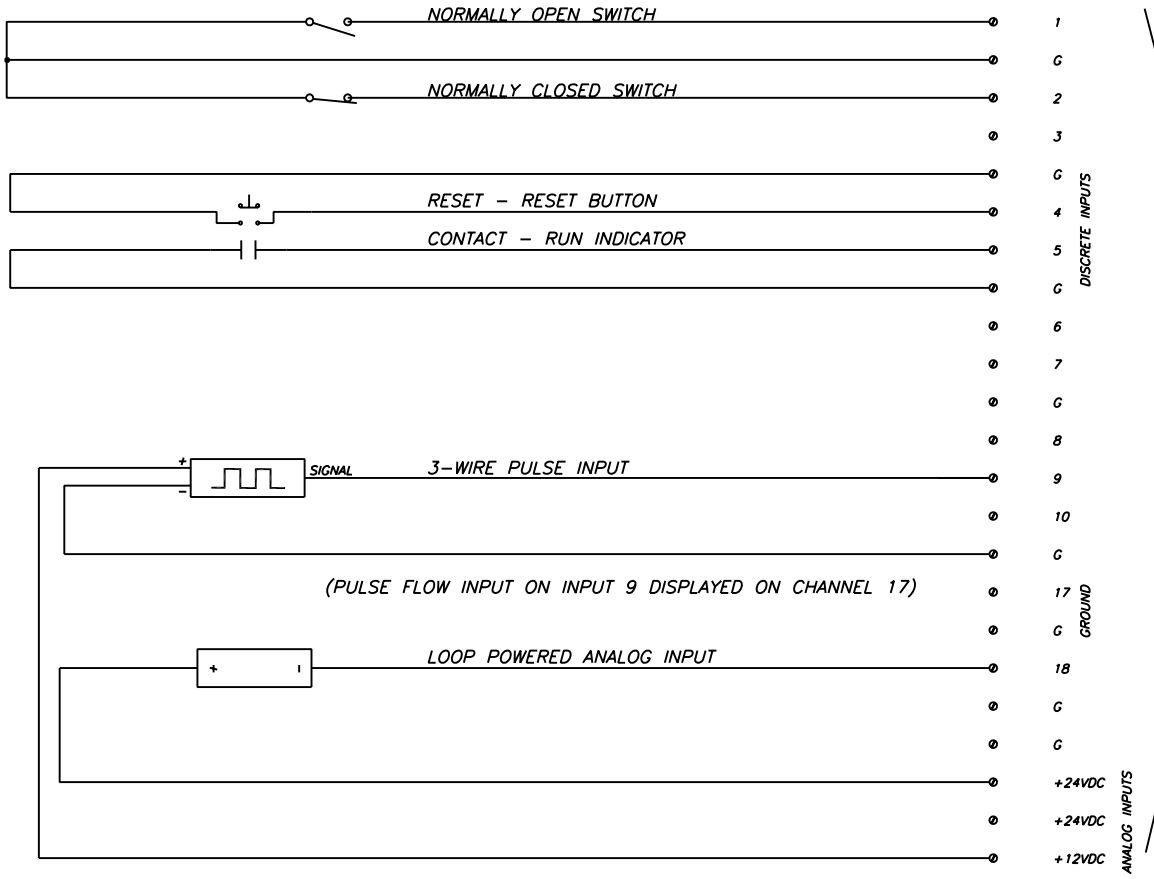

SERIES 2*plus* Type C1

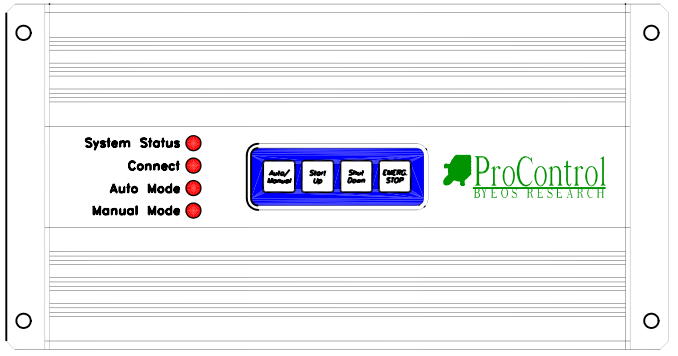

NOTES:
1. FOR ANALOG INPUTS, MAINTAIN VOLTAGE AND TOTAL LOOP RESISTANCE PER MFG. SPECIFICATIONS.
2. INPUT IMPEDANCE FOR SERIES 2Plus ANALOG INPUTS IS 135 OHMS.
3. ACTIVE DISCRETE INPUTS WILL SOURCE 1mA WHEN GROUNDED.
4. THE ProControl SOURCES 5VDC FOR DISCRETE INPUTS.
5. DISTRIBUTE ANALOG INSTRUMENTS EVENLY ACROSS +24VDC TERMINALS.

E O S
research
159 Walnut Street, Rochester, NH

TYPICAL ProControl Type C1 WIRING
DIGITAL & ANALOG INPUTS - BOTTOM LEFT SIDE

EXAMPLE WIRING DIAGRAM

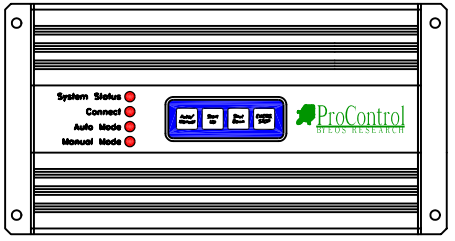

RS-232/SERIAL RJ-45 LOCAL CONNECTION PORT

TEL./RS-485 RJ-11 TELEPHONE/NETWORKING PORT

GROUND +24VDC NEUTRAL LINE

DISCRETE OUTPUTS

40 PRSALM - LOW PRESSURE ALARM (R)

39 SMPALM - HIGH LEVEL ALARM (R)

CM4 COMMON FOR 39-40

38

37

CM3 COMMON FOR 37-38

36

35 SLNVLV - SOLENOD VALVE (CR-1 COIL)

CM2 COMMON FOR 35-36

34 AIRCMP - AIR COMPRESSOR (MS-2 COIL)

33 RW_PMP - RECOVERY WELL PUMP (MS-1 COIL)

CM1 COMMON FOR 33-34

INPUT POWER 10VAC

10VAC TRANSFORMER SUPPLIED WITH ProControl UNIT.

NOTES:
1. OUTPUT RELAYS RATED AT 125VAC/1.0A, 24VDC/1.0A
2. CM1 IS SWITCHED TO 33-34 AND CM2 IS SWITCHED TO 35-36, CM3 IS SWITCHED TO 37-38, CM4 IS SWITCHED TO 39-40 WHEN OUTPUT IS ACTIVE.
3. DO NOT USE +24VDC FROM ProControl TO DRIVE OUTPUTS. FOR TRANSDUCER POWER ONLY.

E O S research
159 Walnut Street, Rochester, NH

TYPICAL ProControl TYPE C WIRING
DIGITAL OUTPUTS - RIGHT SIDE

T1

DUCT SERIES

Material
Rigid PVC,
self-extinguishing

Color
Light GREY RAL 7030
WHITE

Standard Length
6 Feet 6 3/4 Inches

Standard Unit
Duct complete
with cover

THE MOST COMPREHENSIVE RANGE

NOMINAL 1 ½"-2 ¼"-3"-4"

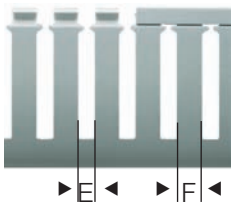

NOMINAL ⅝"-1"

All wiring ducts come complete with cover. Wiring duct covers can be sold separately: see page 8 and IBOCO Corp. Price List.

Catalog Number	Nominal Size (WxH)	Dimensions in inches (Actual) W	H	E	F	Dimensions WxH (in millimeters)	Standard Carton (Qty) Lengths (1)	Feet
T1-0506G	½ x ⅝	.60	.71	.20	.30	15 x 18	20	120
T1-0510G	½ x 1	.60	1.18	.20	.30	15 x 30	20	120
T1-0522G	½ x 2¼	.60	2.36	.20	.30	15 x 60	16	96
T1-1010*	1 x 1	1.00	1.18	.20	.30	25 x 30	18	108
T1-1015*	1 x 1½	1.00	1.57	.31	.47	25 x 40	18	108
T1-1022*	1 x 2¼	1.00	2.36	.31	.47	25 x 60	24	144
T1-1030*	1 x 3	1.00	3.15	.31	.47	25 x 80	24	144
T1-1040*	1 x 4	1.00	3.94	.31	.47	25 x 100	8	48
T1-1515*	1½ x 1½	1.57	1.57	.31	.47	40 x 40	20	120
T1-1522*	1½ x 2¼	1.57	2.36	.31	.47	40 x 60	18	108
T1-1530*	1½ x 3	1.57	3.15	.31	.47	40 x 80	16	96
T1-1540*	1½ x 4	1.57	3.94	.31	.47	40 x 100	8	48
T1-2215G	2¼ x 1½	2.36	1.57	.31	.47	60 x 40	12	72
T1-2222*	2¼ x 2¼	2.36	2.36	.31	.47	60 x 60	12	72
T1-2230*	2¼ x 3	2.36	3.15	.31	.47	60 x 80	12	72
T1-2240*	2¼ x 4	2.36	3.94	.31	.47	60 x 100	4	24
T1-3015G	3 x 1½	3.15	1.57	.31	.47	80 x 40	12	72
T1-3022*	3 x 2¼	3.15	2.36	.31	.47	80 x 60	12	72
T1-3030*	3 x 3	3.15	3.15	.31	.47	80 x 80	12	72
T1-3040*	3 x 4	3.15	3.94	.31	.47	80 x 100	4	24
T1-3050*	3 x 5	2.95	4.92	.31	.47	75 x 125	6	36
T1-4015G	4 x 1½	3.94	1.57	.31	.47	100 x 40	8	48
T1-4022G	4 x 2¼	3.94	2.36	.31	.47	100 x 60	8	48
T1-4030*	4 x 3	3.94	3.15	.31	.47	100 x 80	8	48
T1-4040*	4 x 4	3.94	3.94	.31	.47	100 x 100	4	24
T1-4050*	4 x 5	3.94	4.92	.31	.47	100 x 125	4	24
T1-6040*	6 x 4	5.91	3.94	.31	.47	150 x 100	4	24

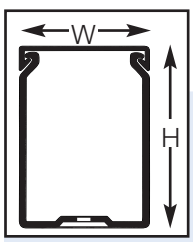

Example: T1-0510 G = 1/2"x 1"light GREY duct with cover

(1) Each standard length is actually 6'6 3/4" but is counted as 6 feet for packaging and pricing

* Color - add suffix "G" for light GREY "W" for WHITE

ADHESIVE BACKING - add suffix "A" to catalog number - contact sales office for pricing (see page 23)

Available in 1 meter length contact sales office

Non- slip cover design of minimun encumbrance and maximum grip.

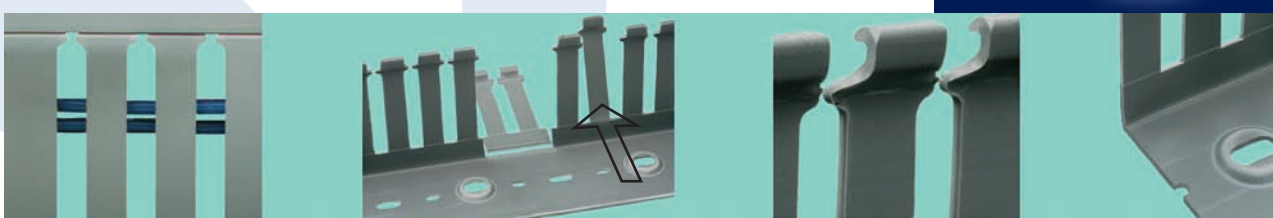

Restricted slot opening for wire retaining.

Two predetermined breaklines:
- for breaking off and removal of sidewall finger segments only.
- for removal of sidewall finger and base segments.

Burr-free edges.

Recess boss for rapid mounting of components.

For wire fill capacity and base perforation of the wiring duct, see page 18.

34 Series - Slim electromechanical PCB relays 6 A

Features

Ultra-slim 1 Pole - 6 A relay

Printed circuit mount
- direct or via PCB socket
35 mm rail mount
- via screw or screwless sockets

- 1 Pole changeover contacts or 1 Pole normally open contact
- Ultra slim, 5 mm, package
- Sensitive DC coil - 170 mW (Dual AC/DC coil drive possible using 93 series sockets)
- UL Listing (certain relay/socket combinations)
- Cadmium Free contact materials
- 8/8 mm clearance/creepage distance
- 6 kV (1.2/50 µs) insulation, coil-contacts

34.51

- 5 mm wide
- Low coil power
- PCB or 93 series sockets

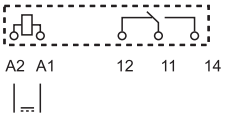

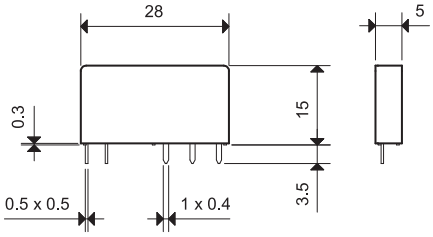

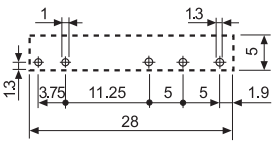

FOR UL RATINGS SEE:
"General technical information" page V

Copper side view

Contact specification		
Contact configuration		1 CO (SPDT)
Rated current/Maximum peak current	A	6/10
Rated voltage/Maximum switching voltage	V AC	250/400
Rated load AC1	VA	1,500
Rated load AC15 (230 V AC)	VA	300
Single phase motor rating (230 V AC)	kW	0.185
Breaking capacity DC1: 30/110/220 V	A	6/0.2/0.12
Minimum switching load	mW (V/mA)	500 (12/10)
Standard contact material		AgNi
Coil specification		
Nominal voltage (U_N)	V AC (50/60 Hz)	–
	V DC	5 - 12 - 24 - 48 - 60
Rated power AC/DC	VA (50 Hz)/W	–/0.17
Operating range	AC	–
	DC	(0.7...1.5)U_N
Holding voltage	AC/DC	–/0.4 U_N
Must drop-out voltage	AC/DC	–/0.05 U_N
Technical data		
Mechanical life AC/DC	cycles	–/10 · 10^6
Electrical life at rated load AC1	cycles	60 · 10^3
Operate/release time	ms	5/3
Insulation between coil and contacts (1.2/50 µs)	kV	6 (8 mm)
Dielectric strength between open contacts	V AC	1,000
Ambient temperature range	°C	–40...+85
Environmental protection		RT II
Approvals (according to type)		

Ordering information

Electromechanical relay (EMR)

Example: 34 series slim electromechanical relay, 1 CO (SPDT) 6 A contacts, 24 V sensitive DC coil.

3 4	.	5	1	.	7	.	0 2 4	.	A 0	B 0	C 1	D 0

Series

Type
5 = Electromechanical type

No. of poles
1 = 1 pole, 6 A

Coil version
7 = Sensitive DC

Coil voltage
See coil specifications

A: Contact material
0 = Standard AgNi
4 = $AgSnO_2$
5 = AgNi + Au (5 µm)

B: Contact circuit
0 = CO (SPDT)
3 = NO (SPST)

C: Options
1 = None

D: Special versions
0 = Flux proof (RT II)
9 = Flat version

Selecting features and options: only combinations in the same row are possible.
Preferred selections for best availability are shown in **bold.**

Type	Coil version	A	B	C	D
34.51	sens. DC	**0** - 4 - 5	**0** - 3	**1**	**0**
34.51	sens. DC	0 - 4 - 5	0	1	9

Flat pack version

Option = 34.51.7xxx.x019

Environmental protection RT I

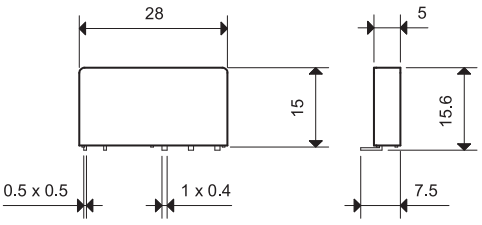

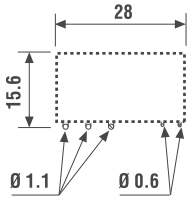

Copper side view

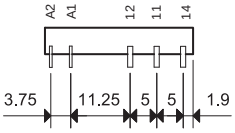

93 Series - Sockets and accessories for 34 series relays

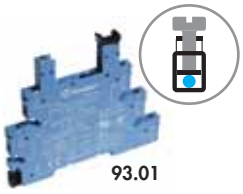

93.01

Approvals (according to type):

Certain relay/socket combinations

Screw terminal socket 35 mm (EN 60715) mounting

Supply voltage	Relay type	Socket type
12 V AC/DC	34.51.7.012.xx10	93.01.0.024
24 V AC/DC	34.51.7.024.xx10	93.01.0.024
48 V AC/DC	34.51.7.048.xx10	93.01.0.060
60 V AC/DC	34.51.7.060.xx10	93.01.0.060
(110...125)V AC/DC	34.51.7.060.xx10 or 34.81.7.060.xxxx	93.01.0.125
(220...240)V AC/DC	34.51.7.060.xx10 or 34.81.7.060.xxxx	93.01.0.240
(110...125)V AC/DC*	34.51.7.060.xx10 or 34.81.7.060.xxxx	93.01.3.125*
(220...240)V AC*	34.51.7.060.xx10 or 34.81.7.060.xxxx	93.01.3.240*
(220...240)V AC	34.51.7.060.xx10 or 34.81.7.060.xxxx	93.01.8.240
6 V DC	34.51.7.005.xx10 or 34.81.7.005.xxxx	93.01.7.024
12 V DC	34.51.7.012.xx10	93.01.7.024
24 V DC	34.51.7.024.xx10 or 34.81.7.024.xxxx	93.01.7.024
48 V DC	34.51.7.048.xx10	93.01.7.060
60 V DC	34.51.7.060.xx10 or 34.81.7.060.xxxx	93.01.7.060

Accessories	
20-way jumper link	093.20 (see specification next page)
Plastic separator	093.01 (see specification next page)
Sheet of marker tags	093.64 (see specification next page)

Technical data			
Rated values		6A - 250 V	
Dielectric strength		6 kV (1.2/50 µs) between coil and contacts	
Protection category		IP 20	
Ambient temperature		(–40...+70)°C ($U_N \leq$ 60 V), (–40...+55)°C ($U_N >$ 60 V)	
Screw torque	Nm	0.5	
Wire strip length	mm	10	
Max. wire size for 93.01 socket		solid wire	stranded wire
	mm²	1x2.5 / 2x1.5	1x2.5 / 2x1.5
	AWG	1x14 / 2x16	1x14 / 2x16

* Leakage current suppression.

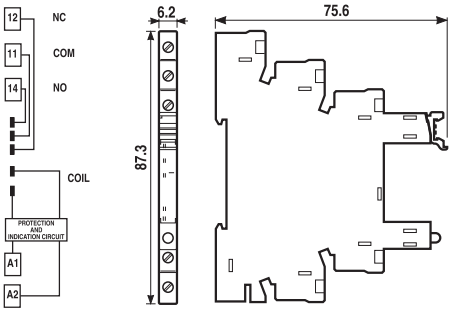

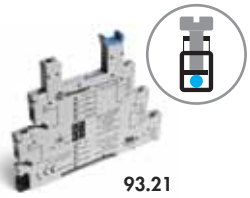

93.21

Approvals (according to type):

Slim timed socket for 34 series (refer to 38 series data sheet for technical data)

Output	Supply voltage	Type of relay	Type of socket
1 pole 6A, electromechanical relay	12 V AC/DC	34.51.7.012.0010	93.21.0.024
1 pole 6A, electromechanical relay	24 V AC/DC	34.51.7.024.0010	93.21.0.024
1 output 2A 24 V DC, solid state relay	24 V AC/DC	34.81.7.024.9024	93.21.0.024
1 output 2A 240 V AC, solid state relay	24 V AC/DC	34.81.7.024.8240	93.21.0.024

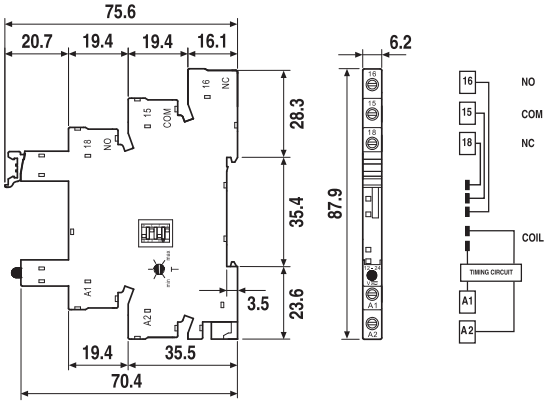

Compact All-in-One Solutions

Powering Business Worldwide

- Eliminate the overload relay with a manual motor protector or combination motor controller
- Get a disconnect, starter, and overload and motor protection in one compact device
- A complete motor protector and remote control solution easily assembled
- UL 508F ratings means no need for protection upstream when using a combination motor controller

Manual Motor Protectors & Controllers Product Overview

Description	**XTPB Pushbutton Manual Motor Protector**	**XTPR Rotary Manual Motor Protector**	**XTSC Manual Motor Controller**	**XTFC Combination Motor Controller**
Page	Page 42	Page 42	Page 49	Page 49
Operator Style	Pushbutton	Rotary	Rotary	Rotary
Components	Manual Motor Protector	Manual Motor Protector	Manual Motor Protector Contactor Connector Kit	Manual Motor Protector Contactor Connector Kit Line Side Adapter
UL 508 Type E	—	Yes, Line Side Adapter	—	—
UL 508 Type F	—	—	—	Yes, Line Side Adapter
Branch Motor Circuit Functions	Disconnect Controller (manual) Short Circuit Protection Motor Overload Protection	Disconnect Controller (manual) Short Circuit Protection Motor Overload Protection	Disconnect Controller (manual & remote) Short Circuit Protection Motor Overload Protection	Disconnect Controller (manual & remote) Short Circuit Protection Motor Overload Protection
FLA Range	0.1 – 25A	0.1 – 65A	0.1 – 65A	0.1 – 65A

Circuit & Motor Protection

Manual Motor Protectors & Controllers

CATALOG SELECTION

XT IEC Manual Motor Protectors — Catalog Numbering System

XT PR 2P5 B C1

Designation

XT = ***XT*** IEC Power Control

Type

PB = Manual Motor Protector — Pushbutton
PR = Manual Motor Protector — Rotary

Current Ratings

B Frame

P16 = 0.16A	**6P3** = 6.3A
P25 = 0.25A	**010** = 10A
P40 = 0.40A	**012** = 12A
P63 = 0.63A	**016** = 16A
001 = 1A	**020** = 20A
1P6 = 1.6A	**025** = 25A
2P5 = 2.5A	**032** = 32A
004 = 4A	

D Frame

016 = 16A	**050** = 50A
025 = 25A	**058** = 58A
032 = 32A	**063** = 63A
040 = 40A	

Frame Size

B = 45 mm
D = 55 mm

Trip Class

C1 = Class 10
Blank = Magnetic Only (No Thermal Trip)

For our complete product offering, see the Control Products Catalog **(CA08102001E)**.

XT IEC Manual Motor Protectors

XTPR Manual Self-Protected Motor Starters — North American Ratings, UL 508 Type E ①

Motor Protective Device with Thermal and Magnetic Trip

Rated Uninterrupted Current — I_u (Amps)	FLA Adjustment Range / Overload Release — I_r (Amps)	Short Circuit Release — I_{rm} (Amps)	Maximum Motor Ratings ②				Rated Short-Circuit Breaking Capacity (kA)			Line Side Adapter ①	Manual Motor Protector — Screw Terminals
			Maximum hp Rating — P (hp)								
			3-Phase								
			200V	240V	480V/ 277V	600V/ 247V	240V	480/ 277V	600/ 347V	Catalog Number	Catalog Number
Frame B											
0.16	0.1 – 0.16	2.2	③	③	1/2	1/2	50	50	50	**XTPAXLSA**	**XTPRP16BC1**
0.25	0.16 – 0.25	3.4	③	③	1/2	1/2	50	50	50	**XTPAXLSA**	**XTPRP25BC1**
0.4	0.25 – 0.4	5.6	③	③	1/2	1/2	50	50	50	**XTPAXLSA**	**XTPRP40BC1**
0.63	0.4 – 0.63	8.8	③	③	1/2	1/2	50	50	50	**XTPAXLSA**	**XTPRP63BC1**
1	0.63 – 1	14	③	③	1/2	1/2	50	50	50	**XTPAXLSA**	**XTPR001BC1**
1.6	1 – 1.6	22	③	③	3/4	3/4	50	50	50	**XTPAXLSA**	**XTPR1P6BC1**
2.5	1.6 – 2.5	35	1/2	1/2	1	1-1/2	50	50	50	**XTPAXLSA**	**XTPR2P5BC1**
4	2.5 – 4	56	3/4	1	2	3	50	50	50	**XTPAXLSA**	**XTPR004BC1**
6.3	4 – 6.3	88	1	1-1/2	3	5	50	50	50	**XTPAXLSA**	**XTPR6P3BC1**
10	6.3 – 11	140	3	3	7-1/2	10	50	50	50	**XTPAXLSA**	**XTPR010BC1**
12	8 – 12	168	3	3	7-1/2	—	42	42	—	**XTPAXLSA**	**XTPR012BC1**
16	10 – 16	224	3	5	10	—	42	42	—	**XTPAXLSA**	**XTPR016BC1**
20	16 – 20	280	5	5	—	—	42	42	—	**XTPAXLSA**	**XTPR020BC1**
25	20 – 25	350	5	7-1/2	15	—	18	18	—	**XTPAXLSA**	**XTPR025BC1**
32	25 – 32	448	7-1/2	10	25	—	18	18	—	**XTPAXLSA**	**XTPR032BC1**
Frame D											
16	10 – 16	224	3	5	10	10	50	50	50	**XTPAXLSAD**	**XTPR016DC1**
25	16 – 25	350	7-1/2	7-1/2	20	25	50	50	50	**XTPAXLSAD**	**XTPR025DC1**
32	25 – 32	448	10	10	25	30	50	50	50	**XTPAXLSAD**	**XTPR032DC1**
40	32 – 40	560	10	10	30	40	50	50	50	**XTPAXLSAD**	**XTPR040DC1**
50	40 – 50	700	10	15	30	—	65	65	—	**XTPAXLSAD**	**XTPR050DC1**
58	50 – 58	812	15	15	40	—	65	65	—	**XTPAXLSAD**	**XTPR058DC1**
65	55 – 65	882	15	15	40	—	65	65	—	**XTPAXLSAD**	**XTPR063DC1**

① UL 508 Type E starters are assembled from a standard XTPR and a special incoming terminal line side adapter (XTPAXLSA or XTPAXLSAD).

② Select manual motor protectors by full load amperes. Maximum motor ratings (kW, hp) are for reference only.

③ In this range, calculate motor rating according to rated current. Specified values to NEC 430.6(A)(1).

Note: A UL 508 Type E self-protected manual combination starter (XTPR) consists of a manual motor protector (XTPR) and a UL listed line side adapter (e.g., XTPAXLSA). The Type E self-protected manual combination starter alone is a legitimate short-circuit protective device and disconnect means for the downstream motor, while the contactor has been added to provide remote operation of the motor circuit.

Transfer Pump Contactor #XTCE007B10

Contents

Description	*Page*
Contactors and Starters	
Catalog Number Selection	**32**
Product Selection	
Non-reversing Contactors	**33**
Reversing Contactors	**36**
Non-reversing Starters, Bimetallic Overload	**38**
Reversing Starters, Bimetallic Overload	**39**
Non-reversing Starters, C396 Electronic Overload	**41**
Reversing Starters, C396 Electronic Overload	**41**
Star-Delta (Wye-Delta) Starters	**43**
Accessories	**48**
Renewal Parts	**58**
Technical Data and Specifications	**59**
Dimensions	**83**
Reference Data	**199**

XT Family of Contactors

Contactors and Starters

Product Description

Eaton's new line of ***XT*** Contactors and Starters includes non-reversing and reversing contactors, overload relays and a variety of related accessories. Because ***XT*** meets IEC, UL, CSA, CCC and CE standards, it is the perfect product solution for IEC applications all over the world. The compact, space saving, and easy to install ***XT*** line of IEC contactors and starters is the efficient and effective solution for customer applications from 7A to 2000A.

Features and Benefits

- AC control from 12V to 600V 50/60 Hz
- DC control from 12V to 220V
- Available with screw or spring cage terminals
- Reversing or non-reversing contactors and starters
- AC-3 contactor ratings to 1000A and AC-1 contactor ratings to 2000A
- Non-reversing starters to 650A
- Panel or DIN rail mounting to 65A
- IP20 finger and back-of-hand proof
- Large ambient temperature range, -25 to 50°C [-13 to 122°F]
- AC and DC controlled contactors in the same compact frame
- Low power consumption DC coils
- Built-in NO or NC auxiliary contacts to 32A
- Plug-in accessories for reduced installation time
- Coil replacement on Frames C – N (18 – 820A)
- Contact replacement on Frames D – N (40 – 820A)
- Integrated suppressor 7 – 150A DC operated contactors and 185 – 2000A AC and DC operated contactors

Standards and Certifications

- IEC EN 60947
- CE Approved
- UL
- CSA
- CCC
- ATEX
- RoHS

Note: For Type 2 Coordination, see **Page 199**.

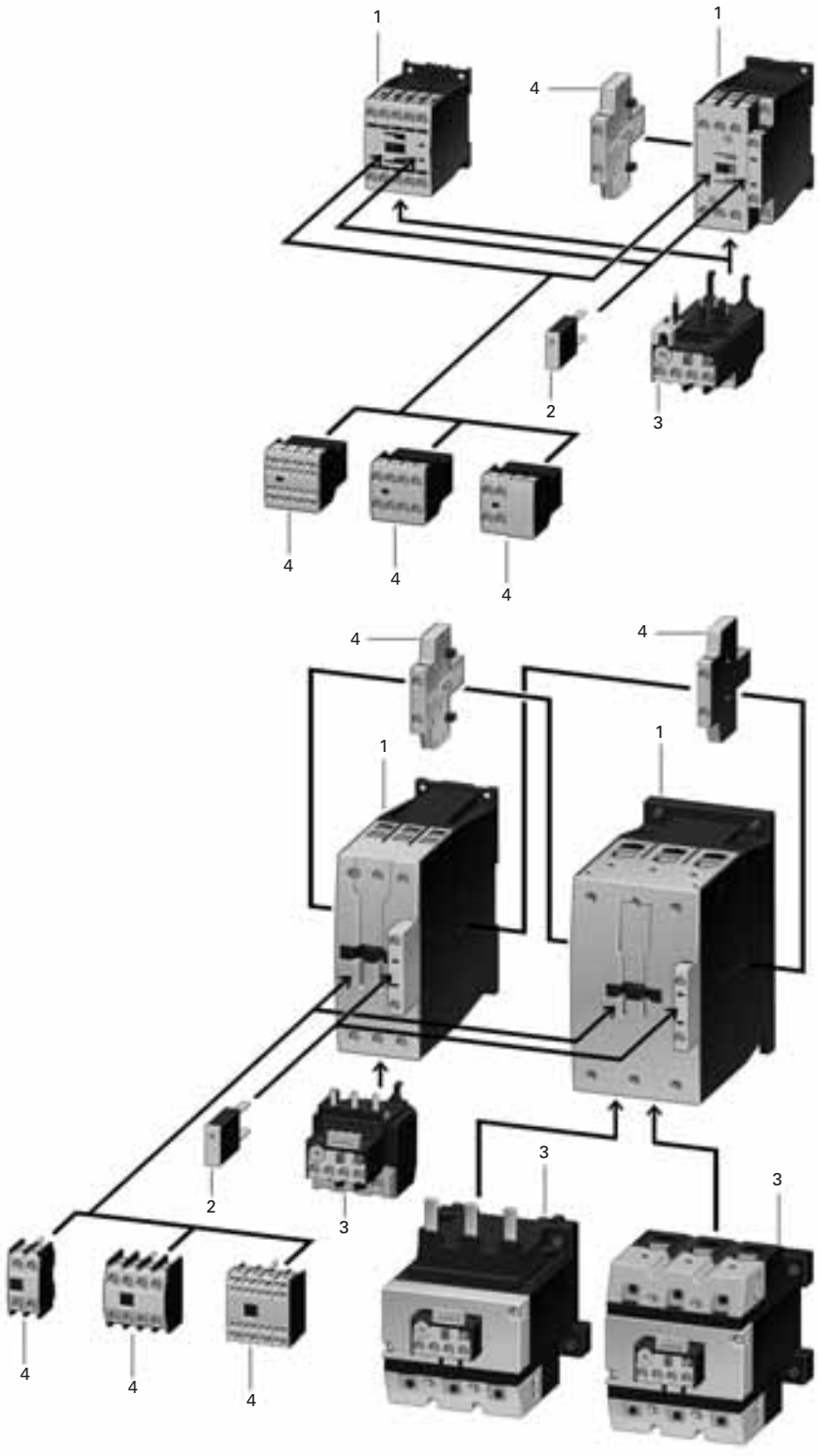

Table 46. Product Identification

No.	Description	Page
Contactor Up to 150A AC-3		
1	AC: ■ 12 – 600V, 50, 60, 50/60 Hz ■ 0.8 – 1.1 x U_c	**33**
	DC: ■ 12 – 250V ■ XTCE…B_ (7 – 15A): 0.8 – 1.1 x U_c ■ XTCE…C_ – XTCE…G_ (18 – 150A): 0.7 – 1.2 x U_c ■ 24V: 0.7 – 1.3 x U_c at 40°C without additional auxiliary contacts	
	Coils for Special Voltages	
	"Safe Isolation" to IEC 536 between coil and contacts	
Suppressors		
2	■ RC suppressor ■ Varistor suppressor ■ Free-wheel diode suppressor	**53**
Overload Relays		
3	■ Can be mounted directly ■ Separate mounting, possible ■ Protection of EEx e motors	**94**
Auxiliary Contact Modules		
4	■ 2-pole, plug-in type ■ 4-pole, plug-in type ■ Overlapping contacts ■ 2-pole, side mounting	**48**

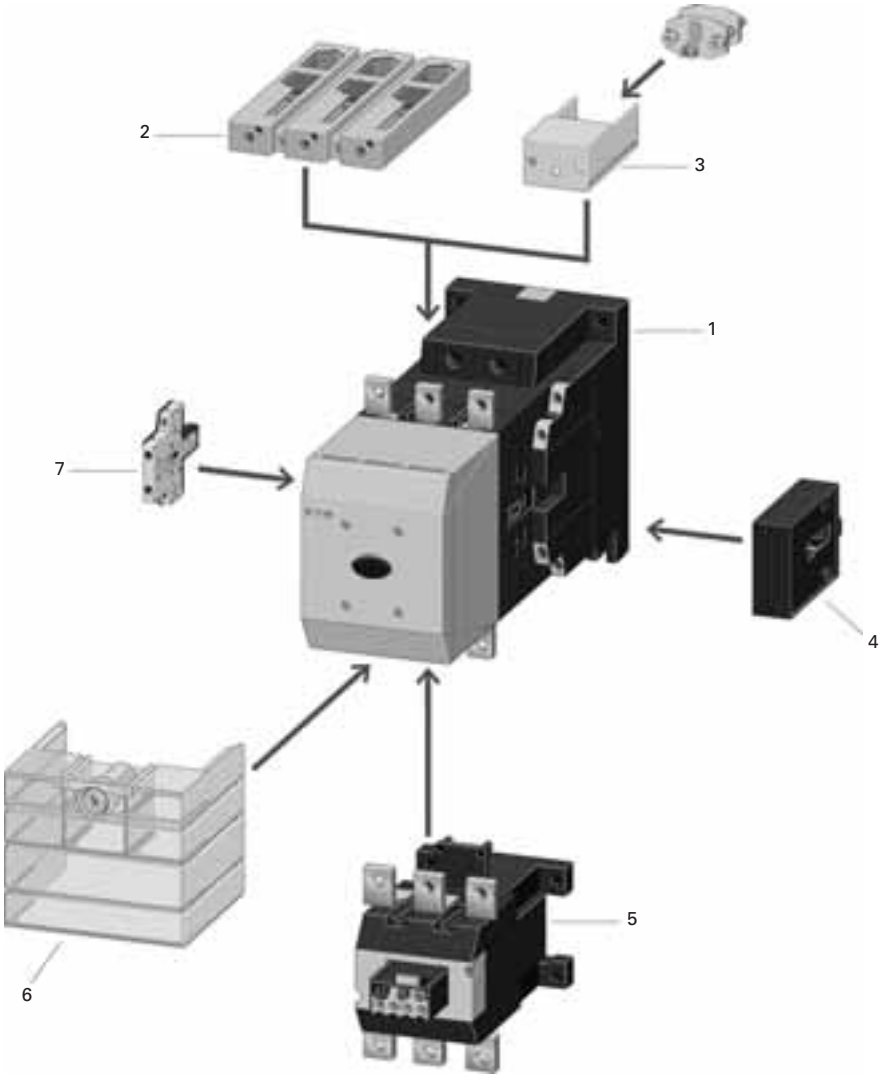

Table 47. XTCE185 – XTCEC20 Contactors

No.	Description	Page
XTCE Contactors for 185 – 2000A (AC-3)		
1	Multi-Voltage Coils: ■ 24 – 48V DC ■ 48 – 110V AC/DC ■ 110 – 250V AC/DC ■ 250 – 500V AC ■ 0.7 – 1.15 x U_c	**33**
	Actuation Options: ■ Directly ■ From the PLC ■ With low-consumption contact Minimized pick-up and sealing power.	
XTCS Contactors for 185 – 500A (AC-3)		
1	Control Voltages: ■ 110 – 120V 50/60 Hz ■ 220 – 240V 50/60 Hz Conventional operation.	**34**
Cable Terminal Block		
2	■ 1 or 2 conductors per phase ■ Round and flat conductor connectable ■ Finger-proof	**57**
Flat Strip Conductor Terminals		
3	■ 1 or 2 strips per phase ■ Control circuit terminal ■ Cover for fingerproofing	**57**
Mechanical Interlock		
4	■ Fits between contactors	**55**
Overload Relays		
5	■ Can be mounted directly ■ Separate mounting, possible ■ Protection of EEx e motors ■ PTB certificate	**94**
Terminal Shroud		
6	■ Finger-proof	**57**
Auxiliary Contact Modules		
7	■ 2-pole, side mounting	**48**

Catalog Number Selection

Table 48. *XT* IEC Contactors & Starters — Catalog Numbering System

XT **CE** **007** **B** **10**

Designation
XT = ***XT*** Line of IEC Control

Type
CE = 3-Pole FVNR IEC Contactor
CS = 3-Pole FVNR S Series IEC Contactor
CF = 4-Pole FVNR IEC Contactor
CR = 3-Pole FVR IEC Contactor
CC = IEC Capacitor Contactor
AE = FVNR IEC Starter
AS = FVNR S-Series IEC Starter
AR = FVR IEC Starter

Terminations
Blank = Screw Terminals (6 – 65A); 5 mm (80 – 150A); No Lugs (185 – 2000A)
C = Spring Cage Terminals (6 – 32A); Spring Cage Coil Terminals Only (185 – 500A)

Current Ratings, AC-3	Frame Size Designation	Built-In Auxiliary Contact
007 = 7A **009** = 9A **012** = 12A **015** = 15A	**B** = 45 mm	**01** = 1NC **10** = 1NO
018 = 18A **025** = 25A **032** = 32A	**C** = 45 mm	
040 = 40A **050** = 50A **065** = 65A	**D** = 55 mm	**00** = 0NO-0NC
080 = 80A **095** = 95A	**F** = 90 mm	
115 = 115A **150** = 150A	**G** = 90 mm	
185 = 185A **225** = 225A **250** = 250A	**L** = 140 mm	**22** = 2NO-2NC
300 = 300A **400** = 400A **500** = 500A	**M** = 160 mm	
580 = 580A **650 =** 650A **750** = 750A **820** = 820A **C10** = 1000A	**N** = 250 mm	
C14 = 1400A, AC-1	**P** = 260 mm	
C16 = 1600A, AC-3 **C20** = 2000A, AC-1	**R** = 515 mm	

Coil Codes
See **Table 57**.

XTAE, XTAS and XTAR Starters Only — Maximum Overload Relay

XTOB Maximum Overload Rating

Frame B	*Frame D*
P16 = 0.1 – 0.16A **P24** = 0.16 – 0.24A **P40** = 0.24 – 0.4A **P60** = 0.4 – 0.6A **001** = 0.6 – 1A **1P6** = 1.0 – 1.6A **2P4** = 1.6 – 2.4A **004** = 2.4 – 4A **006** = 4 – 6A **010** = 6 – 10A **012** = 9 – 12A **016** = 12 – 16A	**010** = 6 – 10A **016** = 10 – 16A **024** = 16 – 24A **040** = 24 – 40A **057** = 40 – 57A **065** = 50 – 65A
Frame C	*Frame F*
P16 = 0.1 – 0.16A **P24** = 0.16 – 0.24A **P40** = 0.24 – 0.4A **P60** = 0.4 – 0.6A **001** = 0.6 – 1A **1P6** = 1.0 – 1.6A **2P4** = 1.6 – 2.4A **004** = 2.4 – 4A **006** = 4 – 6A **010** = 6 – 10A **016** = 10 – 16A **024** = 16 – 24A **032** = 24 – 32A	**035** = 25 – 35A **050** = 35 – 50A **070** = 50 – 70A **100** = 70 – 100A
	Frame G
	035 = 25 – 35A **050** = 35 – 50A **070** = 50 – 70A **100** = 70 – 100A **125** = 95 – 125A **150** = 120 – 150A
	Frame L
	070 = 50 – 70A **100** = 70 – 100A **125** = 95 – 125A **160** = 120 – 160A **220** = 160 – 220A **250** = 200 – 250A

C396 Maximum Overload Rating

	Suffix
	Std. Class 5/10/20/30
Frame B	
0.1 – 0.5A =	**3EP05**
0.4 – 2.0A =	**3E002**
1 – 5A =	**3E005**
1.6 – 8A =	**3E008**
6.4 – 32 =	**3E032**
Frame C	
0.1 – 0.5A =	**3EP05**
0.4 – 2.0A =	**3E002**
1 – 5A =	**3E005**
1.6 – 8A =	**3E008**
6.4 – 32A =	**3E032**
Frame D	
6.4 – 32A =	**3E032**
9 – 45A =	**3E045**
15 – 75A =	**3E075**
Frame F	
22 – 110A =	**3E110**
Frame G	
30 – 150A =	**3E150**

Product Selection

Non-reversing Contactors

Frame B

Frame C

Frame D

Frame F – G

Table 49. Full Voltage Non-reversing 3-Pole Contactors, Frame B – Frame G

I_e (A)	$I_e = I_{th}$ (A)	Maximum kW Ratings AC-3				Maximum 3-Phase Motor Rating, UL/CSA							Aux. Contacts	Catalog Number — Screw Terminals ①②	Price U.S. $	
AC-3	AC-1 (60°C)	3-Phase Motors 50 – 60 Hz				1-Phase hp Ratings			3-Phase hp Ratings						AC Coil	DC Coil
		220/ 230V	380/ 400V	415V	660/ 690V	115V	200V	230V	200V	230V	460V	575V				
Frame B																
7	20	2.2	3	4	3.5	1/4	3/4	1	1-1/2	2	3	5	1NO	**XTCE007B10_**	97.	126.
7	20	2.2	3	4	3.5	1/4	3/4	1	1-1/2	2	3	5	1NC	**XTCE007B01_**	97.	126.
9	20	2.5	4	5.5	4.5	1/2	1	1-1/2	3	3	5	7-1/2	1NO	**XTCE009B10_**	105.	135.
9	20	2.5	4	5.5	4.5	1/2	1	1-1/2	3	3	5	7-1/2	1NC	**XTCE009B01_**	105.	135.
12	20	3.5	5.5	7	6.5	1	2	2	3	3	10 ③	10	1NO	**XTCE012B10_**	129.	165.
12	20	3.5	5.5	7	6.5	1	2	2	3	3	10 ③	10	1NC	**XTCE012B01_**	129.	165.
15.5	20	4	7.5	8	7	1	2	3	5	5	10 ③	10	1NO	**XTCE015B10_**	143.	172.
15.5	20	4	7.5	8	7	1	2	3	5	5	10 ③	10	1NC	**XTCE015B01_**	143.	172.
Frame C																
18	35	5	7.5	10	11	2	2	3	5	5	10 ③	15	1NO	**XTCE018C10_**	149.	180.
18	35	5	7.5	10	11	2	2	3	5	5	10 ③	15	1NC	**XTCE018C01_**	149.	180.
25	40	7.5	11	14.5	14	2	3	5	7-1/2	7-1/2	15	20	1NO	**XTCE025C10_**	179.	208.
25	40	7.5	11	14.5	14	2	3	5	7-1/2	7-1/2	15	20	1NC	**XTCE025C01_**	179.	208.
32	40	10	15	18	17	3	5	5	10	10	20	25	1NO	**XTCE032C10_**	223.	259.
32	40	10	15	18	17	3	5	5	10	10	20	25	1NC	**XTCE032C01_**	223.	259.
Frame D																
40	50	12.5	18.5	24	23	3	5	7-1/2	10	15	30	40	—	**XTCE040D00_**	259.	301.
50	65	15.5	22	30	30	3	7-1/2	10	15	20	40	50	—	**XTCE050D00_**	285.	357.
65	80	20	30	39	35	5	10	15	20	25	50	60	—	**XTCE065D00_**	302.	373.
Frame F																
80	90	25	37	48	63	7-1/2	15	15	25	30	60	75	—	**XTCE080F00_**	388.	485.
95	110	30	45	57	75	7-1/2	15	15	25	40	75	100	—	**XTCE095F00_**	468.	590.
Frame G																
115	130	37	55	70	90	10	25	25	40	50	100	125	—	**XTCE115G00_**	585.	720.
150	160	48	75	91	96	15	25	30	40	60	125	125	—	**XTCE150G00_**	940.	1,125.

① Underscore (_) indicates magnet coil suffix required. See **Table 57, Page 37**.

② For Spring Cage Terminals, insert **C** after the fourth digit of the Catalog Number. Example: XTCE**C**007B10A. For 7 – 12A XTCEC Contactors, the power, auxiliary and coil terminals are spring cage. For 18 – 32A XTCEC Contactors, the auxiliary and coil terminals are spring cage. For 40 – 150A XTCEC Contactors, the coil terminals only are spring cage.

③ For electrical life contactor application data, see **Table 51**, **Page 34**.

Notes:

The 7 – 32A XTCE Contactors have positively driven contacts between the integrated auxiliary contact and the auxiliary contact module as well as within the auxiliary contact modules.

The 40 – 65A XTCE Contactors have positively driven contacts within the auxiliary contact module. 6 auxiliary contacts are possible with a combination of side mounted and front mount auxiliary contacts.

DC operated contactors (Frames B – G, 7 – 150A) have a built-in suppressor circuit.

Frame B – C contactors with 1NC built-in auxiliary are mirror contacts (XTCE...B01_ – XTCE...C01_).

Contact Sequence (Circuit Symbols) ..... **Page 34**
Coil Voltage Chart ..... **Page 37**
Accessories ..... **Page 48**
Dimensions ..... **Page 83**
Overload Relays ..... **Page 94**
Discount Symbol **1CD7**

Circuit & Motor Protection

Manual Motor Protectors & Controllers

PRODUCT SELECTION

XT IEC Manual Motor Protectors — Accessories

Combination Connection Kits for Connection of XTPR MMP with XTCE Contactor

	For Use with...	Description	Std. Pack	Catalog Number
Non-Reversing Starters				
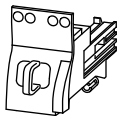	XTPR...B + XTCE...B	Comprised of: • Mechanical connection element for XTPR...B and contactor • Main current wiring between XTPR...B and contactor in tool-less plug connection • Cable guidance Use contactor auxiliary switch XTCEXFAT_. Control cable guidance: max. 6 cables up to 2.5 mm² external diameter or 4 cables up to 3.5 mm² external diameter.	1	**XTPAXTPCB**
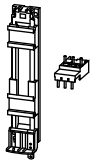	XTPR...B + XTCE...C	Comprised of: • DIN-Rail adapter plate • Main current wiring between XTPR and contactor	1	**XTPAXTPCC**
	XTPR...D + XTCE...D		1	**XTPAXTPCD**

Insulated Enclosures for Surface Mounting

	Degree of Protection	For Use with...	Description	Catalog Number
XTPB Pushbutton Manual Motor Protectors — North American Usage ①②				
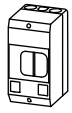	IP65 NEMA 3R, 4X, 12, 13	XTPB MMP Only or with: XTPAXFA..., XTPBXFAEM20, XTPAXSA..., XTPAXUVR..., XTPAXSR..., XTPAXCL	With actuating diaphragm	**XTPBXENAS65**
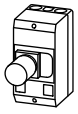	IP65 NEMA 3R, 4X, 12, 13	XTPB MMP Only or with: XTPAXFA..., XTPBXFAEM20, XTPAXUVR..., XTPAXSR..., XTPAXCL	With Emergency-Stop (E-Stop) pushbutton actuator, Red-Yellow	**XTPBXENASES65**
B-Frame (0.1 – 32A) XTPR Rotary Manual Motor Protectors — North American Usage ③				
	IP55 NEMA 1, 12, 3R	B-Frame XTPR Only or with: XTPAXSA... and XTPAXFA..., XTPAXUVR...and XTPAXFA..., XTPAXSR...and XTPAXFA..., XTPAXCL	With red/yellow rotary handle for use as Emergency-Stop switch to VDE 0113	**XTPAXENAS55RY**
D-Frame (10 – 65A) XTPR Rotary Manual Motor Protectors ④⑤				
	IP65 NEMA 1, 12, 3R, 4X	D-Frame XTPR Only or with: XTPAXFA..., XTPAXFAEM20, XTPAXSA..., XTPAXSATR..., XTPAXUVR..., XTPAXSR..., XTPAXCL	With red/yellow rotary handle for use as Emergency-Stop switches to IEC / EN 60204	**XTPAXENCSD65RY**

① Built-in terminal for PE(N).

② North American enclosures come with conduit adapters for use with 1/2" NPT.

③ Built-in N and PE terminal, lower part without knockouts.

④ Integrated terminal for PE(N) connection.

⑤ % Metric knockouts:
Top ÷ bottom: M25/M32
In backplate: M25/M32
Control cable entry: M20

TA75DU-52

General Information

Extended Product Type:	TA75DU-52
Product ID:	1SAZ321201R1004
EAN:	4013614216725
Catalog Description:	TA75DU-52 Thermal Overload Relay
Long Description:	The TA75DU-52 thermal overload relay is an economic electromechanical protection device for the main circuit. It offers reliable and fast protection for motors in the event of overload or phase failure. The device has trip class 10A. Further features are the temperature compensation, trip contact (NC), signal contact (NO), automatic- or manual reset selectable, trip-free mechanism, STOP- and Test function and a trip indication. The overload relays are connected directly to the block contactors. Single mounting kits are available as accessory.

Categories

Products » Low Voltage Products and Systems » Control Products » Contactors » Thermal Overload Relays

Ordering

Minimum Order Quantity:	1 piece
Customs Tariff Number:	85364900

Dimensions

Product Net Width:	58 mm
Product Net Height:	92 mm
Product Net Depth:	111 mm
Product Net Weight:	0.335 kg

Popular Downloads

Data Sheet, Technical Information:	1SBC100173C0201
Data Sheet, Technical Information (Part 2):	1SAZ300501F0004
Dimension Diagram:	1SAZ300402F0001

Technical

Setting Range:	36 ... 52 A
Rated Operational Voltage:	Auxiliary Circuit 440 V DC Auxiliary Circuit 500 V AC Main Circuit 690 V AC
Rated Operational Current (I_e):	52 A
Rated Operational Current AC-3 (I_e):	52 A
Rated Frequency (f):	Auxiliary Circuit 50 Hz Auxiliary Circuit 60 Hz Auxiliary Circuit DC Main Circuit 60 Hz Main Circuit 50 Hz Main Circuit DC
Rated Impulse Withstand Voltage (U_{imp}):	Auxiliary Circuit 6 kV Main Circuit 6 kV
Rated Insulation Voltage (U_i):	690 V
Number of Poles:	3
Number of Auxiliary Contacts NC:	1
Number of Auxiliary Contacts NO:	1
Number of Protected Poles:	3
Conventional Free-air Thermal Current (I_{th}):	Auxiliary Circuit NC 10 A Auxiliary Circuit NO 6 A
Rated Operational Current AC-15 (I_e):	(120 V) NC 3 A (120 V) NO 1.5 A (240 V) NC 3 A (240 V) NO 1.5 A (400 V) NC 1.9 A (400 V) NO 1 A (440 V) NC 1 A (440 V) NO 1 A (500 V) NC 1 A (500 V) NO 1 A
Rated Operational Current DC-13 (I_e):	(125 V) NC 0.25 A (125 V) NO 0.25 A

	(24 V) NC 1.25 A (24 V) NO 1.25 A (250 V) NC 0.12 A (250 V) NO 0.04 A (60 V) NC 0.25 A (60 V) NO 0.25 A
Degree of Protection:	Housing IP20 Main Circuit Terminals IP10
Pollution Degree:	3
Connecting Capacity Auxiliary Circuit:	Flexible with Ferrule 1/2x 0.75 ... 2.5 mm² Flexible 1/2x 0.75 ... 2.5 mm² Rigid 1/2x 0.75 ... 4 mm²
Connecting Capacity Main Circuit:	Flexible with Ferrule 1x 2.5 ... 25 mm² Flexible with Ferrule 2x 2.5 ... 10 mm² Rigid 1x 2.5 ... 25 mm² Rigid 2x 2.5 ... 16 mm²
Tightening Torque:	Auxiliary Circuit 1 ... 1.3 N·m Main Circuit 4.5 N·m
Wire Stripping Length:	Auxiliary Circuit 9 mm Main Circuit 14 mm
Recommended Screw Driver:	Main Circuit Pozidriv 2
Mounting Position:	Position 1 to 4
Power Loss:	at Rated Operating Conditions per Pole 1.7 ... 3.5 W
Suitable For:	A50 A63 A75 AE50 AE63 AE75
Standards:	IEC/EN 60947-1 IEC/EN 60947-4-1 IEC/EN 60947-5-1 UL 60947-1 UL 60947-4-1

Environmental

Ambient Air Temperature:	Operation -25 ... +55 °C Operation Compensated -25 ... +55 °C Storage -40 ... +70 °C
Ambient Air Temperature Compensation:	Yes
Maximum Operating Altitude Permissible:	2000 m
Resistance to Shock acc. to IEC 60068-2-27:	11 ms Pulse 12g

Technical UL/CSA

Maximum Operating Voltage UL/CSA:	Main Circuit 600 V AC
Ampere Rating UL/CSA:	52 A
Contact Rating UL/CSA:	(NC:) B600 (NO:) C300
Connecting Capacity Main Circuit UL/CSA:	Flexible 1/2x 8-1 AWG Stranded 1/2x 8-1 AWG
Connecting Capacity Auxiliary Circuit UL/CSA:	Flexible 1/2x 18-14 AWG Stranded 1/2x 18-14 AWG
Tightening Torque UL/CSA:	Auxiliary Circuit 12 in·lb Main Circuit 40 in·lb

Certificates and Declarations (Document Number)

ABS Certificate:	1SAA941000-0102
BV Certificate:	1SAA941000-0201
CB Certificate:	1SAA941001-2001
CCC Certificate:	1SAA941003-3805
cUL Certificate:	cUL_E48139
Declaration of Conformity - CE:	1SAD938513-0043
DNV Certificate:	1SAA941000-0303
EAC Certificate:	1SAA941002-2701
GL Certificate:	1SAA941000-0403 1SAA941006-0403
GOST Certificate:	1SAA941000-2704
Instructions and Manuals:	2CDC106049M6802

LR Certificate:	1SAA941000-0504
RMRS Certificate:	1SAA941000-0703
RoHS Information:	1SAA941002-4403
UL Certificate:	UL_E48139 1SAA938001-1604

Container Information

Package Level 1 Units:	1 piece
Package Level 1 Width:	92 mm
Package Level 1 Height:	109 mm
Package Level 1 Length:	61 mm
Package Level 1 Gross Weight:	0.36 kg
Package Level 1 EAN:	4013614216725
Package Level 2 Units:	24 piece
Package Level 2 Width:	280 mm
Package Level 2 Height:	210 mm
Package Level 2 Length:	395 mm
Package Level 2 Gross Weight:	8.786 kg
Package Level 2 EAN:	4013614493850

Classifications

Object Classification Code:	F
E-nummer:	3228656
ETIM 4:	EC000106 - Thermal overload relay
ETIM 5:	EC000106 - Thermal overload relay
ETIM 6:	EC000106 - Thermal overload relay
eClass:	7.0 27371501
UNSPSC:	39121521

DB80

Products Low Voltage Products and Systems Control Products Contactors Thermal Overload Relays Accessories

General Information

Extended Product Type:	DB80
Product ID:	1SAZ301110R0001
EAN:	4013614237751
Catalog Description:	DB80 Single Mounting Kit
Long Description:	DB80 Single mounting kit

Additional Information

ABS Certificate:	No Certificate Needed
Ambient Air Temperature:	Operation -25 … +55 °C Storage -40 … +70 °C
Ampere Rating UL/CSA:	80 A
Country of Origin:	Germany (DE)
Customs Tariff Number:	85389099
DNV Certificate:	No Certificate Needed
Data Sheet, Technical Information:	1SBC100173C0201
Declaration of Conformity - CE:	1SAD938513-0043
Dimension Diagram:	1SAZ300405F0001
E-nummer:	3229004
EAN:	4013614237751
EPLAN Catalog Tree:	Electrical engineering / General / General
ETIM 4:	EC002498 - Accessories for low-voltage switch technology
ETIM 5:	EC002498 - Accessories for low-voltage switch technology
ETIM 6:	EC002498 - Accessories for low-voltage switch technology
GL Certificate:	No Certificate Needed
GOST Certificate:	1SAA941000-2704
IIT Publishing Status:	Level 0 - Information enabled
Industrial IT Certification Level:	0
Instructions and Manuals:	2CDC106013M6802
Invoice Description:	DB80 Single mounting kit
LR Certificate:	No Certificate Needed
Maximum Operating Voltage UL/CSA:	Main Circuit 600 V AC
Minimum Order Quantity:	1 piece
Number of Poles:	3
Object Classification Code:	Q
Package Level 1 EAN:	4013614237751
Package Level 1 Gross Weight:	0.195 kg
Package Level 1 Height:	90 mm
Package Level 1 Length:	125 mm
Package Level 1 Units:	1 piece
Package Level 1 Width:	105 mm
Package Level 2 EAN:	4013614493713
Package Level 2 Gross Weight:	8.786 kg
Package Level 2 Height:	210 mm
Package Level 2 Length:	395 mm
Package Level 2 Units:	16 piece

Package Level 2 Width:	280 mm
Pollution Degree:	3
Product Main Type:	DB80
Product Name:	Single Mounting Kit
Product Net Depth:	117 mm
Product Net Height:	92 mm
Product Net Weight:	0.155 kg
Product Net Width:	60 mm
RINA Certificate:	No Certificate Needed
RMRS Certificate:	No Certificate Needed
Rated Frequency (f):	Main Circuit 50 Hz Main Circuit 60 Hz
Rated Impulse Withstand Voltage (U_{imp}):	Main Circuit 6 kV
Rated Insulation Voltage (U_i):	690 V
Rated Operational Current AC-3 (I_e):	80 A
Rated Operational Voltage:	Main Circuit 690 V AC
Selling Unit of Measure:	piece
Short Description:	DB80 Single mounting kit
Standards:	IEC/EN 60947-1 IEC/EN 60947-4-1 UL 508 CSA 22.2 No. 14
Suitable For:	TA42DU TA75DU TA75-M
Suitable for Product Class:	Thermal Overload Relays
Terminal Type:	Screw Terminals
UL Certificate:	UL_E48139
UNSPSC:	39120000
cUL Certificate:	cUL_E48139
eClass:	7.0 27379201

ALN4 SERIES ENCLOSURES
NEMA 4X SINGLE DOOR WALL-MOUNT

ALN4161206

Industry Standards
UL 508, Types 4, 4X, 12 & 13
CSA Certified, Types 4 & 12
NEMA/EEMAC Types 4, 12 & 13

UL File E64791

CSA File LL66078

FEATURES-SPECIFICATIONS

Applications
This lightweight enclosure provides long-lasting protection for housing electrical components in highly corrosive environments. It is used in both indoor and outdoor settings that are frequently wet or have constant exposure to water, other liquids, or contaminants. Suitable for use in petro-chemical plants, sewage plants, marine environments, and similar installations.

Construction
- Bodies and doors fabricated from .080-inch thick (2 millimeters) 5052-H32 aluminum
- Continuously welded seams ground smooth, no holes or knockouts
- Door and body stiffeners are provided in larger enclosures for extra rigidity
- Rolled lip on three sides of door and all sides of enclosure opening is provided to exclude liquids and contaminants
- Quick and easy to operate stainless steel door clamps are provided
- Doors are removable by pulling stainless steel continuous hinge pin
- Hasp and staple for padlocking
- Print pocket is provided
- Closed cell oil resistant neoprene gasket
- Collar studs provided for mounting optional sub panels
- External mounting feet for mounting enclosure
- Grounding provisions provided
- Optional back panels must be ordered separately

Finish
- All exterior surfaces of enclosures have a smooth grained finish
- Optional aluminum back panels are unpainted (See page I4)
- Optional steel back panels are white polyester powder (See page I4)

Accessories
- Back panels (reference tables)
- See pages J1-J22

ALN4 SERIES SINGLE DOOR ALUMINUM ENCLOSURES

CATALOG NUMBER	ENCLOSURE SIZE H X W X D	BACK PANEL CATALOG NUMBER*		BACK PANEL SIZE A X B	F	STIFFENER		E
		WHITE	ALUM.			DOOR	BODY	
ALN4161206	16.00x12.00x6.00 (406x305x152)	NP1612	ALNP1612	13.00x 9.00 (330x229)	1.25 (32)	No	No	—
ALN4201606	20.00x16.00x 6.00 (508x406x152)	NP2016	ALNP2016	17.00x13.00 (432x330)	3.00 (76)	No	No	—
ALN4202006	20.00x20.00x 6.00 (508x508x152)	NP2020	ALNP2020	17.00x17.00 (432x432)	3.00 (76)	No	No	—
ALN4242006	24.00x20.00x 6.00 (610x508x152)	NP2420	ALNP2420	21.00x17.00 (533x432)	3.00 (76)	No	No	4.313 (110)
ALN4161608	16.00x16.00x 8.00 (406x406x203)	NP1616	ALNP1616	13.00x13.00 (330x330)	3.00 (76)	No	No	—
ALN4242408	24.00x24.00x 8.00 (610x610x203)	NP2424	ALNP2424	21.00x21.00 (533x533)	3.00 (76)	No	No	4.313 (110)
ALN4302408	30.00x24.00x 8.00 (762x610x203)	NP3024	ALNP3024	27.00x21.00 (686x533)	3.00 (76)	No	No	5.813 (148)
ALN4362408	36.00x24.00x 8.00 (914x610x203)	NP3624	ALNP3624	33.00x21.00 (838x533)	3.00 (76)	No	No	7.313 (186)
ALN4363008	36.00x30.00x 8.00 (914x762x203)	NP3630	ALNP3630	33.00x27.00 (838x686)	3.00 (76)	No	Yes	7.313 (186)
ALN4483608	48.00x36.00x 8.00 (1219x914x203)	NP4836	ALNP4836	45.00x33.00 (1143x838)	3.00 (76)	Yes	Yes	—
ALN4201610	20.00x16.00x10.00 (508x406x254)	NP2016	ALNP2016	17.00x13.00 (432x330)	3.00 (76)	No	No	—
ALN4242010	24.00x20.00x10.00 (610x508x254)	NP2420	ALNP2420	21.00x17.00 (533x432)	3.00 (76)	No	No	4.313 (110)
ALN4242410	24.00x24.00x10.00 (610x610x254)	NP2424	ALNP2424	21.00x21.00 (533x533)	3.00 (76)	No	No	4.313 (110)
ALN4302412	30.00x24.00x12.00 (762x610x305)	NP3024	ALNP3024	27.00x21.00 (686x533)	3.00 (76)	No	No	5.813 (148)
ALN4363012	36.00x30.00x12.00 (914x762x305)	NP3630	ALNP3630	33.00x27.00 (838x686)	3.00 (76)	No	Yes	7.313 (186)
ALN4603612	60.00x36.00x12.00 (1524x914x305)	NP6036	ALNP6036	57.00x33.00 (1448x838)	3.00 (76)	Yes	Yes	6.656 (169)

**Back panels must be ordered separately.*

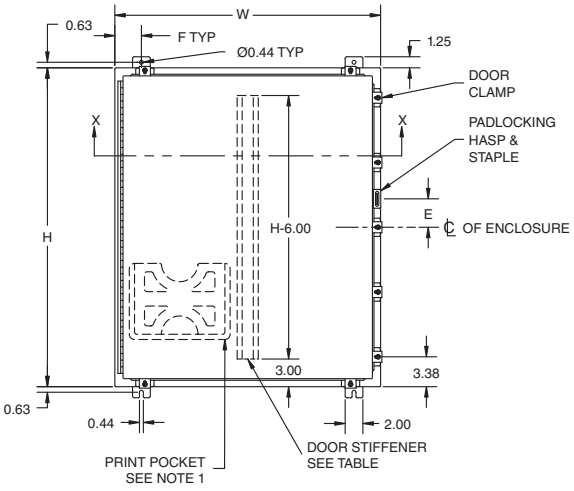

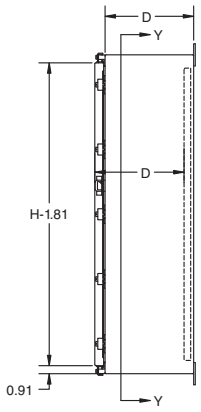

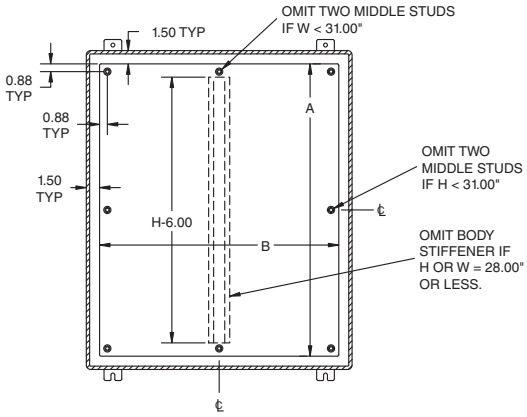

SECTION Y-Y

NOTES:

1. Large print pocket (8X10) is furnished if H = 20.00" or more and W = 20.00" or more. Otherwise small (6X6) print pocket is provided.
2. Panels made from 12 Ga. steel or 10 Ga. Aluminum.
3. Panels have flanges along all sides when either dimension exceeds 17".
4. The number of door clamps is dependent on size of enclosure. Clamps are furnished along three sides of door.
5. F = 3" when W is 16" or greater and 1-1/4" when W is 12" or less.

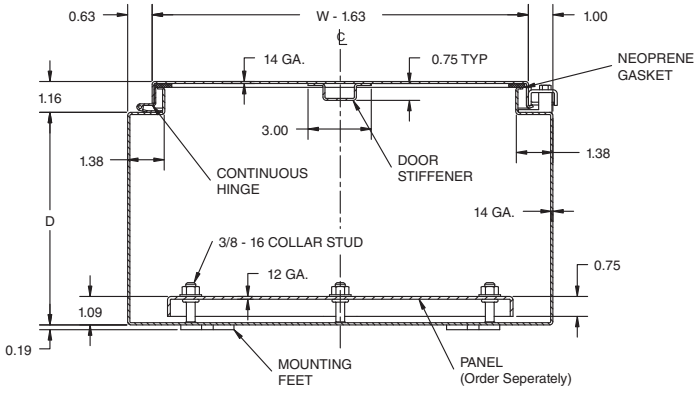

SECTION X-X

Please read and save these instructions. Read carefully before attempting to assemble, install, operate or maintain the product described. Protect yourself and others by observing all safety information. Failure to comply with instructions could result in personal injury and/or property damage! Retain instructions for future reference.

Dayton® AC Axial Fans

Description

Dayton AC Axial Fans are single speed units used for spot cooling where space is limited. They are widely used in computers, copy machines, electronic instrumentation, cabinet cooling, machine tool products, and solar systems. They are field interchangeable with most other axial fans. Ball bearing units are all position mount. Sleeve bearing units are horizontal shaft mount only. Optional finger guard and cord set are available as accessories (except 2RTD2, 3LE75, 4WT40 and 4WT41 have 12" leads) and can be ordered separately.

NOTE: Not for use with adjustable speed controls.

Figure 1

Specifications & Performance

Specifications							Performance				
Model	AC Volts Req'd	Overall Dimensions (in.) H & W	Overall Dimensions (in.) D	Mounting Hole Dimensions on Center (in.)	Motor Type	Bearing Type	CFM Air Delivery†	RPM	Watts	Amps	* SIL db
2RTD1	115	4 11/16	1 1/2	4 1/8	Shaded Pole	Sleeve	115	3100	20	0.25	49
2RTD2	230	3 1/8	1 1/2	2 13/16	Shaded Pole	Ball	31	2850	13.5	0.08	36.5
2RTD5	230	4 11/16	1 1/2	4 1/8	Shaded Pole	Sleeve	63	1800	10	0.05	32
2RTD7	230	4 11/16	1 1/2	4 1/8	Shaded Pole	Ball	72	2150	10	0.06	37
2RTD8	230	4 11/16	1 1/2	4 1/8	Shaded Pole	Ball	99	3000	15	0.10	49
2RTD9	230	4 11/16	1 1/2	4 1/8	Shaded Pole	Sleeve	115	3100	21	0.12	49
2RTE1	230	4 11/16	1 1/2	4 1/8	Shaded Pole	Ball	117	3150	21	0.12	50
2RTE2	230	6 15/16	3 1/2	6	Shaded Pole	Ball	335	3250	30	0.15	66
2RTK5	115	4 11/16	1 1/2	4 1/8	Shaded Pole	Sleeve	100	2900	20	0.22	47
2RTK6	115	4 11/16	1 1/2	4 1/8	Shaded Pole	Ball	124	2750	21	0.25	47
3LE74	230	4 11/16	1 1/2	4 1/8	Shaded Pole	Ball	107	3050	19	0.11	50
3LE75	115	3 1/8	1 1/2	2 13/16	Shaded Pole	Ball	31	2850	12	0.13	36.5
3LE76	115	4 11/16	1 1/2	4 1/8	Shaded Pole	Ball	78	2300	11	0.11	39
3LE77	115	4 11/16	1 1/2	4 1/8	Shaded Pole	Ball	75	2100	10	0.11	49
3VU64	230	4 11/16	1 1/2	4 1/8	Shaded Pole	Sleeve	62	1900	12	0.07	35
3VU65	115	4 11/16	1 1/2	4 1/8	Shaded Pole	Ball	102	3000	14	0.18	48
3VU66	115	6 15/16	3 1/2	6	PSC	Ball	355	3250	30	0.27	66
4WT33	230	4 11/16	1 1/2	4 1/8	Shaded Pole	Sleeve	105	2900	19	0.11	48
4WT40	115	3 1/8	1 1/2	2 13/16	Shaded Pole	Sleeve	30	2750	12	0.13	35
4WT41	230	3 1/8	1 1/2	2 13/16	Shaded Pole	Sleeve	30	2750	16	0.08	35
4WT46	115	4 11/16	1 1/2	4 1/8	Shaded Pole	Sleeve	115	3100	20	0.24	49
4WT47A	115	4 11/16	1 1/2	4 1/8	Shaded Pole	Sleeve	105	2900	18	0.18	48
4WT48	115	4 11/16	1 1/2	4 1/8	Shaded Pole	Sleeve	70	2000	11	0.13	36
4WT49	115	4 11/16	1 1/2	4 1/8	Shaded Pole	Sleeve	55	1750	11.3	0.12	33.5
6KD75	115	4 11/16	1 1/2	4 1/8	Shaded Pole	Ball	117	3150	20	0.24	50
6KD76	115	4 11/16	1 1/2	4 1/8	Shaded Pole	Ball	107	3050	18	0.18	50

NOTE: All data based on 60 Hz operation. When operated on 50 Hz, a decrease of approximately 20% will occur in flow rate performance.
(†) At free air.
(*) SIL db – Speech interference Level in decibels. This figure represents an average of the sound pressure levels in the 500, 1000, and 2000 Hz octave bands.

Dayton® AC Axial Fans

ENGLISH

General Safety Information

⚠ WARNING ***Disconnect power before installing or servicing.***

1. Follow all local electrical and safety codes, the National Electrical Code (NEC) and the Occupational Safety and Health Act (OSHA) in the United States.
2. Fan must be securely and adequately grounded. This can be accomplished by connecting a separate ground wire to the fan frame with a self-threading screw (not furnished) in the hole provided.
3. Lock and tag power disconnect to prevent unexpected application of power.
4. Guard all moving parts.
5. Protect the power cable from coming in contact with sharp objects.
6. Do not kink power cable and never allow the cable to come in contact with oil, grease, hot surfaces or chemicals.
7. Make certain that the power source conforms to the requirements of your equipment.

⚠ WARNING ***Do not use in explosive atmospheres.***

Installation

1. Mount fan in the position most desirable to your needs. Note mounting limitations under "Description."
2. Secure fan in place with screws and tinnerman clips or nuts and bolts. (Mounting hardware not included.)

WIRING

Refer to Grainger Catalog for a complete list of cord sets. Plug cord set into fan and connect to 115 volt or 230 volt power source, as noted on nameplate.

NOTE: 2RTD2, 3LE75, 4WT40 and 4WT41 do not accept a cord set.

⚠ CAUTION ***Exposed wires should not come in contact with the fan housing.***

1. Fan must be adequately grounded. This can be accomplished by connecting a separate ground wire to the fan housing with a #10 self-threading screw (not furnished) in the hole provided.

Operation

Dayton sleeve bearing axial fans are designed to operate optimally in horizontal airflow position. Arrows stamped on housing indicate direction of blade rotation and airflow. Ball Bearing Axial Fans are designed to mount in any position.

Maintenance

⚠ WARNING ***Always disconnect power supply before inspecting the axial fan or working with the unit for any reason.***

Axial fan cannot be field serviced. Replace entire unit if defective.

NOTE: No replacement parts available.

ACCESSORIES

Refer to Grainger Catalog for a complete list of axial fan accessories.

Por favor lea y guarde estas instrucciones. Léalas cuidadosamente antes de tratar de montar, instalar, operar o dar mantenimiento al producto aquí descrito. Protéjase usted mismo y a los demás observando toda la información de seguridad. ¡El no cumplir con las instrucciones puede ocasionar daños, tanto personales como a la propiedad! Guarde estas instrucciones para referencia en el futuro.

Ventiladores Axiales de CA Dayton®

Descripción

Los ventiladores axiales de CA Dayton son unidades de velocidad única para aplicaciones de enfriamiento parcial donde el espacio es limitado. Se utilizan generalmente en computadoras, máquinas copiadoras, instrumentación electrónica, enfriamiento dentro de gabinetes, máquinas-herramientas y sistemas solares. Se pueden intercambiar en campo con la mayoría de ventiladores axiales. Todas las unidades de rodamientos de bolas se montan en posición. Las unidades de rodamientos de manguito se instalan con el eje en posición horizontal únicamente. Se dispone de conjuntos de cordones y protecciones para los dedos opcionales como accesorios (salvo los modelos 2RTD2, 3LE75, 4WT40 y 4WT41 que incluyen conductores de 30.5 cm). Estos accesorios pueden pedirse por separado.

AVISO: han sido diseñados para uso con controles de velocidad ajustable.

Figura 1

Especificaciones y Desempeño

Especificaciones							Desempeño				
Modelo	Voltios de CA necesarios	Dimensiones generales (mm) Alt y A	P	Dimensiones del orificio de montaje en el centro (mm)	Tipo de motor	Tipo de rodamiento	Suministro de aire MCM†	RPM	Vatios	Amperios	* SIL db
2RTD1	115	119.1	38.1	104.8	Polo sombreado	Manguito	3.25	3100	20	0.25	49
2RTD2	230	79.4	38.1	71.4	Polo sombreado	Bola	0.87	2850	13.5	0.08	36.5
2RTD5	230	119.1	38.1	104.8	Polo sombreado	Manguito	1.78	1800	10	0.05	32
2RTD7	230	119.1	38.1	104.8	Polo sombreado	Bola	2.03	2150	10	0.06	37
2RTD8	230	119.1	38.1	104.8	Polo sombreado	Bola	2.80	3000	15	0.10	49
2RTD9	230	119.1	38.1	104.8	Polo sombreado	Manguito	3.25	3100	21	0.12	49
2RTE1	230	119.1	38.1	104.8	Polo sombreado	Bola	3.31	3150	21	0.12	50
2RTE2	230	176.2	88.9	152.4	Polo sombreado	Bola	9.48	3250	30	0.15	66
2RTK5	115	119.1	38.1	104.8	Polo sombreado	Manguito	2.83	2900	20	0.22	47
2RTK6	115	119.1	38.1	104.8	Polo sombreado	Bola	3.51	2750	21	0.25	47
3LE74	230	119.1	38.1	104.8	Polo sombreado	Bola	3.02	3050	19	0.11	50
3LE75	115	79.4	38.1	71.4	Polo sombreado	Bola	0.87	2850	12	0.13	36.5
3LE76	115	119.1	38.1	104.8	Polo sombreado	Bola	2.20	2300	11	0.11	39
3LE77	115	119.1	38.1	104.8	Polo sombreado	Bola	2.12	2100	10	0.11	49
3VU64	230	119.1	38.1	104.8	Polo sombreado	Manguito	1.75	1900	12	0.07	35
3VU65	115	119.1	38.1	104.8	Polo sombreado	Bola	2.97	3000	14	0.18	48
3VU66	115	176.2	88.9	152.4	CPD	Bola	10.05	3250	30	0.27	66
4WT33	230	119.1	38.1	104.8	Polo sombreado	Manguito	2.97	2900	19	0.11	48
4WT40	115	79.4	38.1	71.4	Polo sombreado	Manguito	0.84	2750	12	0.13	35
4WT41	230	79.4	38.1	71.4	Polo sombreado	Manguito	0.84	2750	16	0.08	35
4WT46	115	119.1	38.1	104.8	Polo sombreado	Manguito	3.25	3100	20	0.24	49
4WT47A	115	119.1	38.1	104.8	Polo sombreado	Manguito	2.97	2900	18	0.18	48
4WT48	115	119.1	38.1	104.8	Polo sombreado	Manguito	1.98	2000	11	0.13	36
4WT49	115	119.1	38.1	104.8	Polo sombreado	Manguito	1.55	1750	11.3	0.12	33.5
6KD75	115	119.1	38.1	104.8	Polo sombreado	Bola	3.31	3150	20	0.24	50
6KD76	115	119.1	38.1	104.8	Polo sombreado	Bola	3.02	3050	18	0.18	50

AVISO: Toda la información está basada en un funcionamiento a 60 Hz. En un funcionamiento a 50 Hz, el flujo disminuirá aproximadamente un 20%.

(†) Al aire libre.

(*) SIL db – Nivel de interferencia en conversación en decibeles. Esta cifra representa un promedio de los niveles de presión sonora en octavos de frecuencia de banda de 500, 1000 y 2000 Hz.

ESPAÑOL

Formulario 5S6148

Impreso en China
09670
0808/327/VCPVP

SUN100
09/11

Ventiladores Axiales de CA Dayton®

Información de Seguridad General

⚠ ADVERTENCIA ***Desconecte la alimentación eléctrica antes de instalar o dar mantenimiento.***

1. Observe todos los códigos eléctricos y de seguridad locales, el Código Eléctrico Nacional (NEC) y la Ley de Seguridad y Salud Ocupacional (OSHA) de EE.UU.
2. El ventilador debe conectarse a tierra de forma segura y adecuada. Esto se logra conectando un cable de puesta a tierra independiente al bastidor del ventilador con un tornillo autorroscante (no suministrado) en el orificio provisto.
3. Bloquee y coloque un aviso de advertencia en el punto de desconexión para evitar que el dispositivo sea encendido inesperadamente.
4. Proteja todas las partes móviles.
5. Evite que el cable de alimentación entre en contacto con objetos filudos.
6. No pliegue el cable de alimentación y nunca permita que éste entre en contacto con aceite, grasa, superficies calientes o productos químicos.
7. Asegúrese que la fuente de alimentación satisfaga los requisitos de su equipo.

⚠ ADVERTENCIA ***No utilice este producto en ambientes explosivos.***

Instalación

1. Instale el ventilador en la posición más indicada para sus necesidades. Observe las limitaciones de montaje bajo "Descripción".
2. Asegure el ventilador en posición con tornillos, y tuercas y pernos o sujetadores timmerman. (Herraje de montaje no suministrado).

CABLEADO

Consulte el catálogo de Grainger para obtener una lista completa de conjuntos de cordones. Enchufe el conjunto de cordones en el ventilador y conecte a una fuente de alimentación de 115 voltios o 230 voltios, según se indica en la placa del fabricante.

AVISO: Los modelos 2RTD2, 3LE75, 4WT40 y 4WT41 no funcionan con un conjunto de cordones.

⚠ PRECAUCION ***Los cables expuestos no deberán entrar en contacto con el alojamiento del ventilador.***

1. El ventilador debe estar debidamente conectado a tierra. Esto se logra conectando un cable de puesta a tierra independiente al alojamiento del ventilador con un tornillo autorroscante No. 10 (no suministrado) en el orificio provisto.

Operación

Los ventiladores axiales de rodamientos de manguito han sido diseñados para funcionar de manera óptima en posición de circulación de aire horizontal. Las flechas impresas en el alojamiento indican la dirección de la rotación del aspa y la circulación de aire. Los ventiladores axiales de rodamientos de bolas han sido diseñados para instalarse en cualquier posición.

Mantenimiento

⚠ ADVERTENCIA ***Desconecte siempre la fuente de alimentación antes de inspeccionar el ventilador axial o trabajar en la unidad por cualquier razón.***

El ventilador axial no puede recibir servicio en campo. Reemplace la unidad completa si se encuentra defectuosa.

AVISO: No hay partes de reemplazo disponibles.

ACCESORIOS

Consulte el catálogo de Grainger para obtener una lista completa de los accesorios para ventiladores axiales.

Veuillez lire et conserver ces instructions. Lire attentivement avant de commencer à assembler, installer, faire fonctionner ou entretenir l'appareil décrit. Protégez-vous et les autres en observant toutes les informations sur la sécurité. Négliger d'appliquer ces instructions peut résulter en des blessures corporelles et/ou en des dommages matériels ! Conserver ces instructions pour références ultérieures.

Ventilateurs hélicoïdes c.a. Dayton®

Description

Les ventilateurs hélicoïdes c.a. Dayton sont des appareils à vitesse unique utilisés pour un rafraîchissement circonscrit dans un espace limité. Ils sont très utilisés dans des ordinateurs, des photocopieuses, de l'équipement électronique, pour le refroidissement des armoires, dans des produits d'outillage et dans des systèmes solaires. Ils sont interchangeables avec la plupart des autres ventilateurs hélicoïdes. Les appareils avec roulements à billes s'installent dans n'importe quelle position. Les appareils avec coussinet-douille s'installent uniquement sur un arbre horizontal. Le jeu de protection pour les doigts et de cordon est disponible en tant qu'accessoire (saufs le 2RTD2, 3LE75, 4WT40 et le 4WT41 qui ont des fils de 30,5 cm) et peut être commandé séparément.

Figure 1

REMARQUE : Ne peuvent être utilisés avec des commandes de vitesse réglable.

Spécifications et performances

Spécifications							Performance				
Modèle	Tension c.a. requise	Dimensions hors tout (mm) H et Lar	Dimensions hors tout (mm) Prof.	Trou de montage Dimensions au centre (mm)	Type de moteur	Type de roulement	Débit d'air m³/min†	Tr/min	Watts	Ampères	* SIL db
2RTD1	115	119,1	38,1	104,8	Enroulement à court-circuit	Manchon	3,25	3100	20	0,25	49
2RTD2	230	79,4	38,1	71,4	Enroulement à court-circuit	Bille	0,87	2850	13.5	0,08	36,5
2RTD5	230	119,1	38,1	104,8	Enroulement à court-circuit	Manchon	1,78	1800	10	0,05	32
2RTD7	230	119,1	38,1	104,8	Enroulement à court-circuit	Bille	2,03	2150	10	0,06	37
2RTD8	230	119,1	38,1	104,8	Enroulement à court-circuit	Bille	2,80	3000	15	0,10	49
2RTD9	230	119,1	38,1	104,8	Enroulement à court-circuit	Manchon	3,25	3100	21	0,12	49
2RTE1	230	119,1	38,1	104,8	Enroulement à court-circuit	Bille	3,31	3150	21	0,12	50
2RTE2	230	176,2	88,9	152,4	Enroulement à court-circuit	Bille	9,48	3250	30	0,15	66
2RTK5	115	119,1	38,1	104,8	Enroulement à court-circuit	Manchon	2,83	2900	20	0,22	47
2RTK6	115	119,1	38,1	104,8	Enroulement à court-circuit	Bille	3,51	2750	21	0,25	47
3LE74	230	119,1	38,1	104,8	Enroulement à court-circuit	Bille	3,02	3050	19	0,11	50
3LE75	115	79,4	38,1	71,4	Enroulement à court-circuit	Bille	0,87	2850	12	0,13	36,5
3LE76	115	119,1	38,1	104,8	Enroulement à court-circuit	Bille	2,20	2300	11	0,11	39
3LE77	115	119,1	38,1	104,8	Enroulement à court-circuit	Bille	2,12	2100	10	0,11	49
3VU64	230	119,1	38,1	104,8	Enroulement à court-circuit	Manchon	1,75	1900	12	0,07	35
3VU65	115	119,1	38,1	104,8	Enroulement à court-circuit	Bille	2,97	3000	14	0,18	48
3VU66	115	176,2	88,9	152,4	PSC	Bille	10,05	3250	30	0,27	66
4WT33	230	119,1	38,1	104,8	Enroulement à court-circuit	Manchon	2,97	2900	19	0,11	48
4WT40	115	79,4	38,1	71,4	Enroulement à court-circuit	Manchon	0,84	2750	12	0,13	35
4WT41	230	79,4	38,1	71,4	Enroulement à court-circuit	Manchon	0,84	2750	16	0,08	35
4WT46	115	119,1	38,1	104,8	Enroulement à court-circuit	Manchon	3,25	3100	20	0,24	49
4WT47A	115	119,1	38,1	104,8	Enroulement à court-circuit	Manchon	2,97	2900	18	0,18	48
4WT48	115	119,1	38,1	104,8	Enroulement à court-circuit	Manchon	1,98	2000	11	0,13	36
4WT49	115	119,1	38,1	104,8	Enroulement à court-circuit	Manchon	1,55	1750	11.3	0,12	33,5
6KD75	115	119,1	38,1	104,8	Enroulement à court-circuit	Bille	3,31	3150	20	0,24	50
6KD76	115	119,1	38,1	104,8	Enroulement à court-circuit	Bille	3,02	3050	18	0,18	50

REMARQUE : Toutes les données sont calculées à partir d'un fonctionnement sur du 60 Hz. Un fonctionnement à 50 Hz. réduit d'environ 20 % la performance du débit.

(†) À l'air libre.

(*) SIL db – Niveau d'interférence de la voix en décibels. Ce chiffre représente une moyenne des niveaux de pression du son dans les bandes d'octaves de 500, 1000 et 2000 Hertz.

FRANÇAIS

Brochure 5S6148

Imprimé en Chine
09670
0808/327/VCPVP

SUN100
09/11

Ventilateurs hélicoïdes c.a. Dayton®

Informations générales sur la sécurité

⚠ AVERTISSEMENT ***Couper l'alimentation électrique avant d'installer ou de réparer l'appareil.***

1. Respecter tous les codes électriques et de sécurité locaux, le United States National Electric Code (NEC) et l'Occupationnal Safety and Health Act (OSHA) des États-Unis.
2. Le ventilateur doit être mis à la terre de façon sécuritaire et adéquate. On obtiendra ce résultat en connectant un fil de terre séparé au cadre du ventilateur et en le vissant avec une vis à filetage automatique (non fournie) dans le trou prévu à cet effet.
3. Verrouiller et étiqueter l'interrupteur pour éviter une mise en marche intempestive.
4. Protéger toutes les pièces mobiles.
5. Protéger le câble d'alimentation contre un contact avec des objets acérés.
6. Ne pas plier le câble d'alimentation et ne jamais le laisser entrer en contact avec de l'huile, de la graisse, des surfaces chaudes ou des produits chimiques.
7. S'assurer que la source d'alimentation électrique est conforme aux exigences de votre équipement.

⚠ AVERTISSEMENT ***Ne pas utiliser dans une atmosphère explosive.***

Installation

1. Installer le ventilateur dans la position qui convient le mieux à vos besoins. Prendre note des limitations d'installation indiquées sous la rubrique « Description ».
2. Fixer solidement le ventilateur à l'aide de vis et d'attaches à tôle ou avec des écrous et des boulons. (La visserie de montage n'est pas incluse.)

CÂBLAGE

Se reporter au catalogue de Grainger pour une liste complète des jeux de cordons. Brancher le jeu de cordon dans le ventilateur et connecter à une source d'alimentation de 115 à 230 V, comme indiqué sur la plaque signalétique.

REMARQUE : Le 2RTD2, 3LE75, 4WT40 et le 4WT41 n'acceptent pas de jeux de cordon.

⚠ ATTENTION ***Les fils exposés ne doivent pas entrer en contact avec le logement du ventilateur.***

1. Le ventilateur doit être correctement mis à la terre. On obtiendra ce résultat en connectant un fil de terre disctinct au logement du ventilateur avec une vis à filetage automatique n° 10 (non fournie) dans le trou prévu à cet effet.

Fonctionnement

Les ventilateurs hélicoïdes à coussinets-douilles de Dayton sont conçus pour donner une performance maximale lorsque le débit d'air est à l'horizontale. Les flèches gravées sur le logement indiquent le sens de rotation de la pale et le débit d'air. Les ventilateurs hélicoïdes à roulements à billes sont conçus pour être installés dans n'importe quelle position.

Entretien

⚠ AVERTISSEMENT ***Toujours débrancher l'alimentation électrique avant d'inspecter le ventilateur hélicoïde ou de travailler sur l'appareil pour une raison quelconque.***

Un ventilateur hélicoïde ne peut être réparé sur le terrain.

Un appareil défectueux doit être entièrement remplacé.

REMARQUE : Aucune pièce de rechange disponible.

ACCESSOIRES

Se reporter au catalogue de Grainger pour une liste complète des accessoires pour ventilateurs hélicoïdes.

FRANÇAIS

TW Series — 22mm NEMA Style Pushbuttons

Key features:

- TW NEMA Style Switches with snap-on contacts
- Corrosion resistant octagonal chrome plated locking bezel
- Snap-on 10A contact blocks
- Incandescent or LED illumination
- Slow make, double break, self cleaning contacts
- Modular construction for maximum flexibility
- NEMA 4X and IP65 watertight/oiltight panel
- Available assembled or as sub-components
- Large M3.5 screw terminals with captive sems plate

IDEC has your 22mm switching needs covered.

Button styles include flush, extended, mushroom, or square and all bodies are crafted from fracture-resistant nylon.

All illuminated units feature two lens styles, one that maximizes light dispersion, the other accommodates direct lens engraving.

Self cleaning contact mechanisms allow for a wide current rating, 5mA to 10A, which reduces the need for various contact materials.

When looking for a 22mm switch that is durable, easy to use, and versatile, then IDEC's TW series is your solution.

UL Listed
File No. E68961

TÜV Rheinland

CSA Approved
File No. LR21451

File No. DK95-01696

Specifications

Conforming to Standards	EN60947-1, EN60947-5-1, VDE0660-200, UL508, CSA C22-2 No.14
Approvals File No. E68961 File No. LR21451 Certificate No. 2030010305027380 TÜV Rheinland Registration No: J9551802 (E-Stops) Registration No: J9551803 (All other switches) Registration No: J9551804 (Pilot Lights)	**CSA:** pushbuttons and selector switches: A600 pilot lights and illuminated pushbuttons, direct supply pilot lights and illuminated pushbuttons with integral transformer (100/110, 115, 120, 200/220, 230, 240, 380, 400/440, 480V) **UL:** pushbuttons and selector switches: A600 pilot lights and illuminated pushbuttons, direct supply pilot lights and illuminated pushbuttons with integral transformer (100/110, 115, 120, 200/220, 230, 240, 380, 400/440, 480V) **TÜV:** pushbuttons and selector switches: A600=P600 (NO, NC)/Q600 (NO-EM, NC-LB) pilot lights and illuminated pushbuttons, direct supply pilot lights and illuminated pushbuttons with integral transformer (100/110, 115, 120, 200/220, 230, 240, 380, 400/440, 480V)
Operating Temperature	Operation: –25 to +50°C (without freezing), Storage: –40 to +80°C (without freezing)
Vibration Resistance	5 to 55Hz, 100m/sec^2 (10g) conforming to IEC6068-2-6
Shock Resistance	1000m/sec^2 (100g) conforming to IEC6068-2-7
Electric Shock Protection	Class 0 conforming to IEC60536
Degree of Protection (conforming to IEC60529) (conforming to NEMA ICS6-110)	IP65 from front of the panel; (IP54 for key switches) IP20 (Type HW-F contact block) Type 1, 2, 3, 3R, 3S, 4, 4X, 5, 12, 13 (Type 1, 2, 3R, 5, 12, 13 for key switches)
Mechanical Life	Momentary pushbuttons: 5,000,000 (900 operations per hour) All other switches: 500,000
Pollution Degree (conforming to IEC60947-1)	3 for switches not using a transformer, 2 for switches using a transformer
Rated Operational Characteristics	AC-15: A600 or Ue = 250V, Ie = 3A (NO, NC, NO-EM, NC-LB) DC-13: P600 or Ue = 125V, Ie = 1.1A (NO, NC) DC-13: Q600 or Ue = 125V, Ie = 0.9A (NO-EM, NC-LB)
Rated Insulation Voltage	600V
Rated Switching Over-Voltage	Less than 4kV, conforming to IEC60947-1
Rated Impulse Withstanding Voltage	4kV for contact circuit, 2.5kV for lamp circuit
Rated Thermal Current	10 Amp
Minimum Switching Capacity	5 mA at 3V AC/DC
Contact Operation	Slow break NC or slow make NO, self-cleaning
Recommended Terminal Torque	0.8 N m (7.1 in lb.)
External Short-Circuit Protection	10A 250V fuse conforming to IEC60269-1
Applicable Wire Size	Minimum 1 x 22 AWG, max. 2 x 14 AWG or 1 x 12 AWG
Contact Resistance	Initial contact resistance of 50mΩ or less
Contact Gap	4mm (NO and NC), 2mm (NO-EM and NC-LB)
Electrical Reliability	MTBF < 1 fault for 10 million operation cycles (3V DC, 5mA)
Lamp Ratings	Incandescent: 1 W LEDs: 6V: 17mA max, 12/24V: 11mA max, 120/240V: 10mA max
Horsepower Rating	1/4 HP @ 120V (single-phase, non-reversing motor); 1 HP @ 240V (3 phase, non-reversing motor)
Maximum Inrush Current	40 A (40 ms)
Contact Material	Silver

Contact Ratings

Pushbuttons
Illuminated Pushbuttons
Selector Switches
Illuminated Selector Switches
Pushbutton Selectors

Contact Block	Type HW-C/HW-F
Rated Insulation Voltage	600V
Rated Continuous Current	10A
Contact Ratings by Utilization Category IEC 60947-5-1	AC-15 (A600) DC-13 (P600)

Characteristics

Contact Ratings by Utilization Category

Operational Voltage			24V	48V	50V	110V	220V	440V
Operational Current	AC50/60Hz	AC-12 Control of resistive loads and solid state loads	10A	—	10A	10A	6A	2A
		AC-15 Control of electromagnetic loads (> 72VA)	10A	—	7A	5A	3A	1A
	DC	DC-12 Control of resistive loads and solid state loads	8A	5A	—	2.2A	1.1A	—
		DC-13 Control of electromagnets	5A	2A	—	1.1A	0.6A	—

Pilot Lights (Assembled)

Alarm pilot lights: AP_W2_99DR24V

Assembled Pilot Lights

A P (Q) W 1 (B) (99) (D) – R – (24V)

Function

P: Pilot Light

Bezel Shape

Blank: Octagonal (round lenses)
Q: Square

Series Designation

W: TW Series

Lens Shape

1: Flat
2: Dome

Lens Type

Blank: Standard (ribbed)
B: Engravable (smooth with insert included)

Illumination Circuit

99: Full Voltage (lamp determines voltage)
126: 120V AC Step Down Transformer
246: 240V AC Step Down Transformer
486: 480V AC Step Down Transformer

Lamp Voltage
(Full Voltage Units Only)

6V: 6V AC/DC
12V: 12V AC/DC
24V: 24V AC/DC
120V: 120V AC (LED only)
240V: 240V AC (LED only)

Lens Color Code

A: Amber
G: Green
R: Red
S: Blue
W: White
Y: Yellow

Lamp Type

Blank: Incandescent
D: LED

1. Use only when interpreting part numbers. Do not use for developing part numbers.
2. All transformers step down to 6V.

Non-Illuminated Selector Switches (Assembled)

Transfer Pump HOA & Test Lights/Reset switches: ASW33L11N

Assembled Selector Switches

A S W 3 (1) (L) 20 (N) – 304

Function

S: Selector Switch

Series Designation

W: TW Series

Number of Positions

2: 2-Position
3: 3-Position
4: 4-Position
5: 5-Position

Spring Return Action

Blank: Maintained
1: Spring return from Right (2 or 3 position)
2: Spring return from Left (2 or 3 position)
3: 2-Way spring return from Left and Right (3 position only)

Circuit Number

(Standard circuits shown on following pages and 669.)

Contacts Terminal Style

Blank: standard
N: Fingersafe (IP20)

Contact Arrangement Code

10: 1NO	01: 1NC
20: 2NO	02: 2NC
40: 4NO	04: 4NC
11: 1NO-1NC	22: 2NO-2NC

Operator Style Code

Blank: Knob Operator
L: Lever Operator
K: Key Operator

1. Use only when interpreting part numbers. Do not use for developing part numbers.
2. Custom contact configurations available.
3. Custom key removable codes available.
4. Portions of part number inside ( ) are optional.

Illuminated Selector Switches (Assembled)

SVE Blower HOA Switch: ASLW329911DN-423-G-24V

Assembled Illuminated Selector Switches

A SL W 2 (2) 99 11 (D) (N) – (103) – R – (24V)

Function

SL:Illuminated Selector Switch

Series Designation

W: TW series

Number of Positions

2: 2-Position
3: 3-Position

Spring Return Action

Blank: Maintained
1: Spring return from Right
2: Spring return from Left
3: Two-Way spring return from Left and Right

Illumination Circuit

99: Full Voltage (lamp determines voltage)
126: 120V AC Step Down Transformer
246: 240V AC Step Down Transformer
486: 480V AC Step Down Transformer

Lamp Voltage
(Full Voltage Units Only)

6V: 6V AC/DC
12V: 12V AC/DC
24V: 24V AC/DC
120V: 120V AC (LED only)
240V: 240V AC (LED only)

Lens Color Code

A: Amber
G: Green
R: Red
S: Blue
W: White
Y: Yellow

Contact Circuit Number

Standard circuits are listed on the following pages and 669.

Contact Terminal Style

Blank: Standard
N: Fingersafe

Lamp Type

Blank: Incandescent Lamp
D: LED Lamp

Contact Arrangement

10: 1NO	01: 1NC
20: 2NO	02: 2NC
40: 4NO	04: 4NC
11: 1NO-1NC	22: 2NO-2NC

1. Use only when interpreting part numbers. Do not use for developing part numbers.
2. All transformers step down to 6V (use 6V lamp).

Hour Meter #700QN001O48150D100230A

SOLID STATE HOUR METERS & COUNTERS

700 SERIES

CURTIS

DESCRIPTION

The Curtis 700 Series are highly reliable solid state hour meters and counters that offer an unprecedented combination of patented technology, performance, reliability and value.

MODEL 700: 2-Wire Hour Meter, displays only when powered. Available in AC/DC.

MODEL 701: 3-Wire Hour Meter, has a provision or continuous display. Available in AC/DC and DC-only.

MODEL 703: Pulse Counter. Available in AC/DC and DC-only.

APPLICATIONS

A wide variety of industrial and commercial applications, including scheduled maintenance, warranty and leasing – for medical equipment, transport and industrial vehicles and other industrial equipment.

FEATURES

- All-8's LCD function test: each digit displays an eight for one second after power-up.
- Attractive 6-digit LCD 5mm or 7mm high digits (7mm with optional backlighting) are much easier to read than electro-mechanical meters, which have only 3mm high digits.
- Silent operation – no moving parts. Eliminates annoying gear and motor noise.
- Exceptional reliability due to nonvolatile memory (EEPROM) which retains data for 25+ years.
- Wide voltage ranges, for example, one unit can be powered from 75 to 270 VAC anywhere between 48 and 440 Hz – ideal for distribution and worldwide markets without having to stock multiple model types.
- Electrical reset (optional).
- Available in ten case styles – all fit in standard hour meter/counter cutouts.
- Multiple mountings available – Metal U-bracket, "U" clamp/stud (D, Q, R and S cases), flange mount with hardware (F, G, J cases), or mounting clip (G, L, Y, Z, cases).
- Backlit units allow external illumination control, i.e., on/off or dimmer (12VDC only).
- Flashing hourglass icon indicates when the hour meter is accumulating time.
- Memory will arm only when power has been applied for five seconds (with no loss of time or counts).
- Low power consumption.
- UL and CE recognized.

CURTIS INSTRUMENTS, INC.
200 KISCO AVENUE
MT. KISCO, NY 10549 USA
TEL (914) 666-2971
FAX (914) 666-2188

CURTIS INSTRUMENTS, (UK) LTD.
5 UPPER PRIORY STREET
NORTHAMPTON NN1 2PT, ENGLAND
TEL 44 (0) 1604-629755
FAX 44 (0) 1604-629876

CURTIS INSTRUMENTS INDIA PRIVATE LTD.
1199, GHOLE ROAD
PUNE 411004, INDIA
TEL 91 (0) 20-5531288
FAX 91 (0) 20-5539192

www.curtisinstruments.com

SPECIFICATIONS

Case Style	Bezel Shape	Lens Material	Case Material	IP Rating Front/Rear	Termination	UL[5]/CE	Suggested Panel Cutout mm
D	Rectangular	Acrylic	ABS	65/50	3/16" Spade	Yes	45.0 x 22.2
F	Hexagonal	Acrylic	ABS	65/65	1/4" Spade	Yes	36.8 x 24.1
G	Hexagonal	Acrylic	ABS	65/651	Packard (2 pin) 2	Yes	36.8 x 24.1
J	Hexagonal	Acrylic	ABS	65/651	Packard (4 pin) 3	Yes	36.8 x 24.1
L	Rectangular	Polycarbonate	Polycarbonate	65/40	Molex 4	Yes	36.8 x 24.1
Q	Round	Glass	Polycarbonate	65/506	1/4" Spade	Yes	ø52 (ø2-1/16)
R (5mm display)	Round	Glass	Polycarbonate	65/506	3/16" Spade	Yes	ø52 (ø2-1/16)
R (7mm display)	Round	Glass	Polycarbonate	65/50	1/4" Spade	Yes	ø52 (ø2-1/16)
S	Square	Glass	ABS	52/50	1/4" Spade	Yes	45.0 x 45.0
Y	Rectangular	Acrylic	ABS	65/651	Packard (4 pin) 3	Yes	36.8 x 24.1
Z	Rectangular	Acrylic	ABS	65/65	1/4" Spade	Yes	36.8 x 24.1

Display	6 digit LCD, 5 or 7mm high
Range & Resolution	Hour meters: 99,999.9 hours Counters: 999,999 counts
Accuracy	Hour meters: 0.1% Counters: ±1 count
Humidity	95%, non-condensing at 38°C
Operating Temperature	-40°C to +85°C
Storage Temperature	-50°C to +85°C
Mechanical Shock	SAE J 1378, 55g
Mechanical Vibration	SAE J 1378, 20g
Operating Frequency (AC powered units)	48 to 440 Hz
Memory	Main power must be applied for 5 seconds to arm memory (with no loss of time/counts). EEPROM, data retained for 25+ years without power.
Current Consumption (Power Terminals)	0.5mA max. @ 5VDC (0512D models) 0.8mA max. @ 12VDC (1248D models) 1.0mA max. @ 120VAC 2.0mA max. @ 230VAC
Input Signal (DC-only)	Counters (703 only): 500 Hz. max., 50% duty cycle (1ms low, min., between consecutive highs)
Input Signal (AC/DC)	Hour meters (701 only): Power must be applied for 0.5s, min., to accumulate time. Counters (703 only): 1 Hz. max., 50% duty cycle (500ms low, min., between consecutive highs)
Reset	5ms min. at operating voltage. Main power must be applied for a minimum of 250ms prior to reset signal.

NOTES:
1. Mating connector must be installed.
2. Equivalent to Delphi-Packard connector P/N 12162000 2-pin.
3. Equivalent to Delphi-Packard connector P/N 15336035 4-pin.
4. Equivalent to Molex connector P/N 43045-0412.
5. UL files AU1841 and E45175.
6. R(5mm) and Q housings also available in a 65/65 version (see model encodement).

MODEL ENCODING

700 MODEL	R Case Style	R Resetability	001 Additional Feature	O Logo*	0512D0612A Operating Voltage
700 = (2-wire hour meter, AC/DC only) 701 = (3-wire hour meter, AC/DC or DC-only 703 = (3-wire counter, AC/DC or DC-only)	D F G[1] J L[2] Q R S Y Z	R = Electrically	001 = 5mm, non-backlit display (Standard) 091 = Epoxy filled unit (moisture resistant, Q, R (5mm), cases only) 601 = 7mm, backlit display (R or S case only) 701 = 7mm, non-backlit display (R or S case only)	O = Curtis Logo N = No Logo	0512D = 5-12VDC nom., 4.75-15VDC abs. 1248D = 12-48VDC nom., 9-60VDC abs. 48150D = 48-150VDC nom., 36-185VDC abs. 0512D0612A = 5-12VDC nom., 4.75-15VDC abs. 6-12VAC nom., 5-15VAC abs. 1248D2060A = 12-48VDC nom., 9-60VDC abs. 20-60VAC nom., 15-75VAC abs. 48150D100230A = 48-150VDC nom., 36-185VDC abs. 100-230VAC nom., 75-270VAC abs.

1. Only model offered: 700GN001N1248D2060A
2. Only models offered: 700LN001N1248D2060A, 700LN001N48150D100230A and 701LN001N1248D

* Custom logos are available
Backlight available on 7mm R or S cases only.

WIRING GUIDE

Case Style	Pin 1	Pin 2	Pin 3	Pin 4	Pin 5	Pin 6
D, F, J,Q, R (5mm), Y & Z	V+	V-	I	R	N/A	N/A
G	V+	V-	N/A	N/A	N/A	N/A
L	V+	V-	I	N/A	N/A	N/A
R (7mm), S	V+	V-	R	I	L	N/A

V+ Operating voltage
V- Common (ground)
I Enable (Optional, use operating voltage to power this pin to record elapsed time (701) or increment count (703).)
R Reset (Optional, supply with operating voltage when unit is to be reset to 0.)
L Lighting control (Optional, 9-15VDC absolute only, regardless of operating voltage.)
NC No connection

DIMENSIONS IN MM

Case Style D

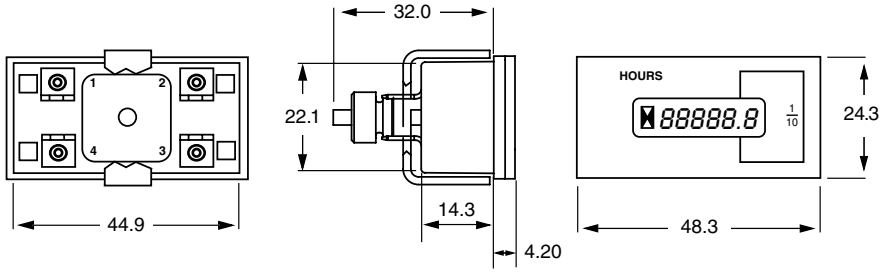

DIMENSIONS IN MM

Case Style Q

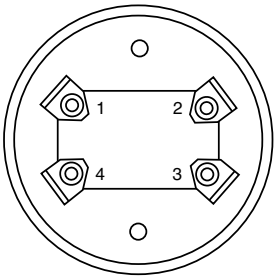

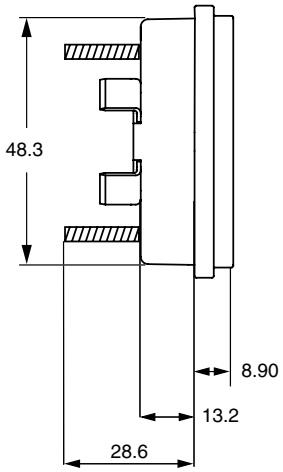

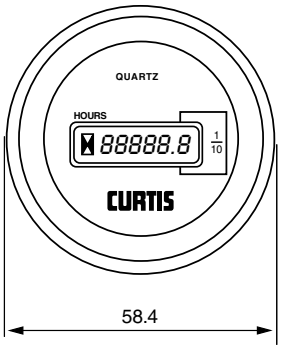

Case Style R (5mm)

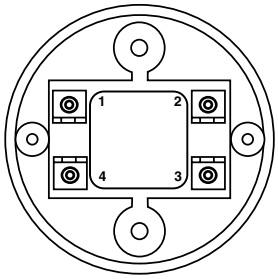

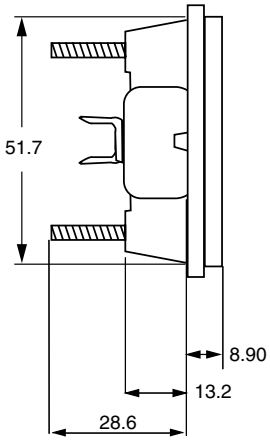

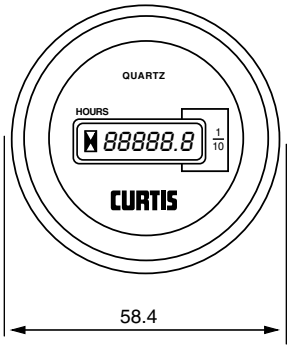

Case Style R (7mm)

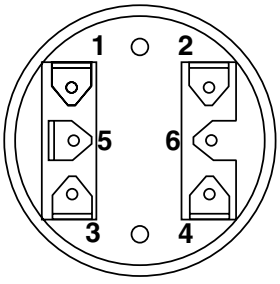

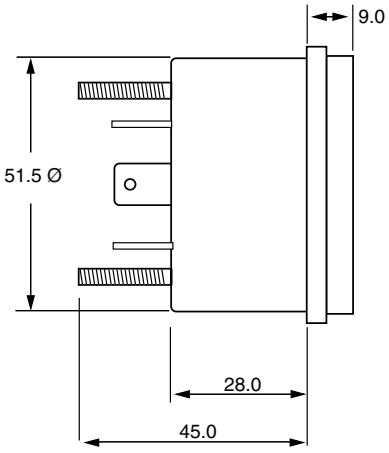

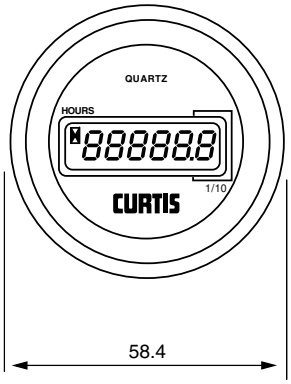

5. System Drawings

EnviroTrac

LONG ISLAND RAIL ROAD
PROPERTY

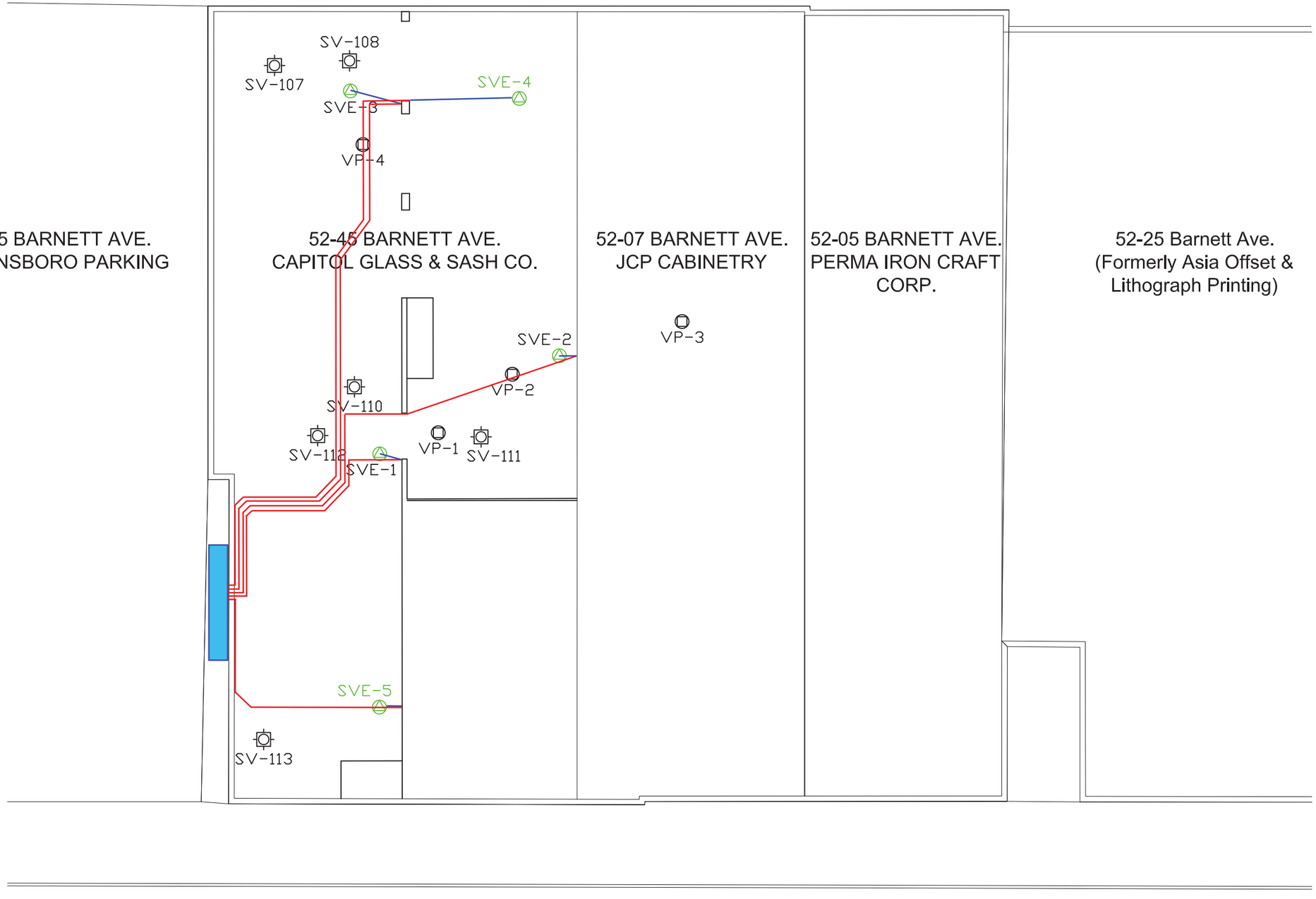

BARNETT AVE.

Extraction Well ID	Design Flow Rate and Wellhead Vacuum
SVE-1	50 cfm @ 20" H2O Vac
SVE-2	100 cfm @ 15" H2O Vac
SVE-3	50 cfm @ 15" H2O Vac
SVE-4	50 cfm @ 20" H2O Vac
SVE-5	100 cfm @ 15" H2O Vac
Blower Requirements: 350 cfm @ 50" H2O Vac/20"H2O Pressure	

LEGEND:

= SVE POINT

= SOIL VAPOR MONITORING POINT

= VACUUM INFLUENCE POINT

= OVERHEAD PIPING

= SUBSURFACE PIPING

= TREATMENT SHED

0 FT 20

APPROX. SCALE

DRAWN/REVISED BY: JW
REVISION DATE: APRIL 21, 2016

FIGURE: 1

DRAWING TITLE

SVE WELL AND OVERHEAD PIPING LAYOUT

PREPARED FOR

FORMER CLEANER PRODUCTS SUPPLY
50-45 BARNETT AVENUE
LONG ISLAND CITY, NEW YORK

EnviroTrac
ENVIRONMENTAL SERVICES
5 OLD DOCK ROAD, YAPHANK, NEW YORK 11980
PHONE: (631)924-3001 FAX: (631)924-5001

SOIL VAPOR EXTRACTION WELL (SVE–1,2,3,4,5)

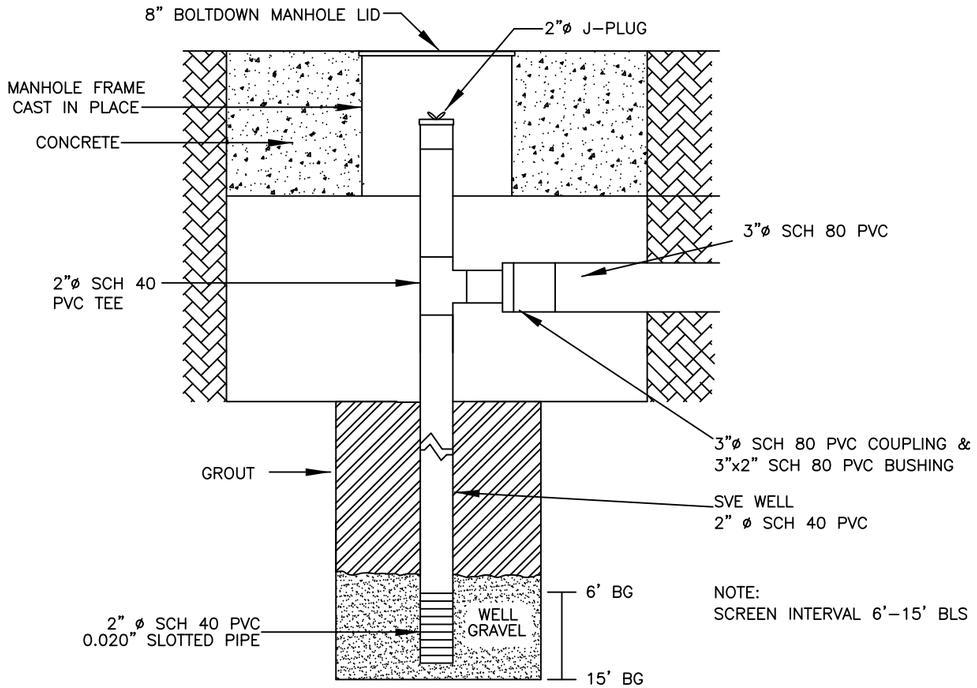

VACUUM INFLUENCE MONITORING POINT (VP–1,2,3,4)

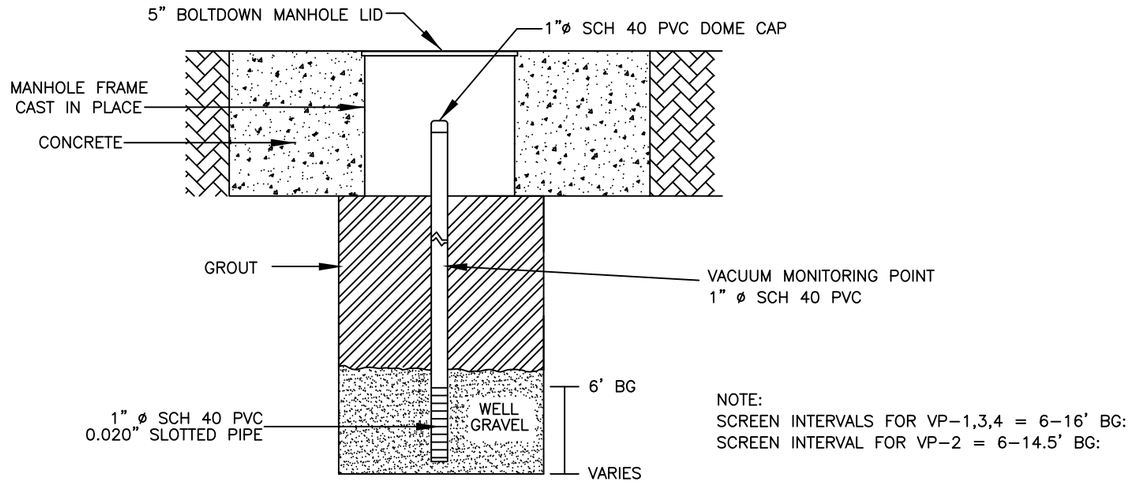

TYPICAL SVE PIPING TRENCH CROSS–SECTION

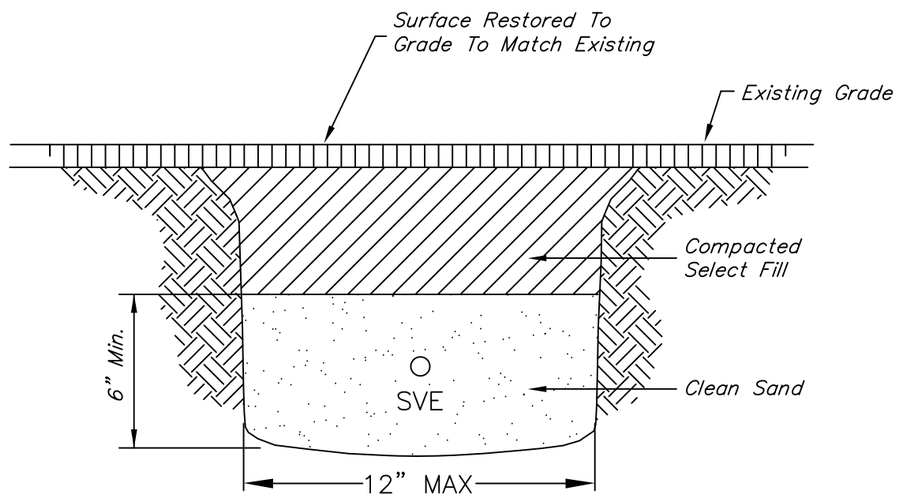

DRAWN/REVISED BY: JW
REVISION DATE: OCT. 10, 2017

FIGURE: 2

DRAWING TITLE

REMEDIAL WELL AND TRENCHING CONSTRUCTION DETAILS

PREPARED FOR

FORMER CLEANER PRODUCTS SUPPLY
50-45 BARNETT AVENUE
LONG ISLAND CITY, NEW YORK

EnviroTrac
ENVIRONMENTAL SERVICES
5 OLD DOCK ROAD, YAPHANK, NEW YORK 11980
PHONE: (631)924–3001 FAX: (631)924–5001

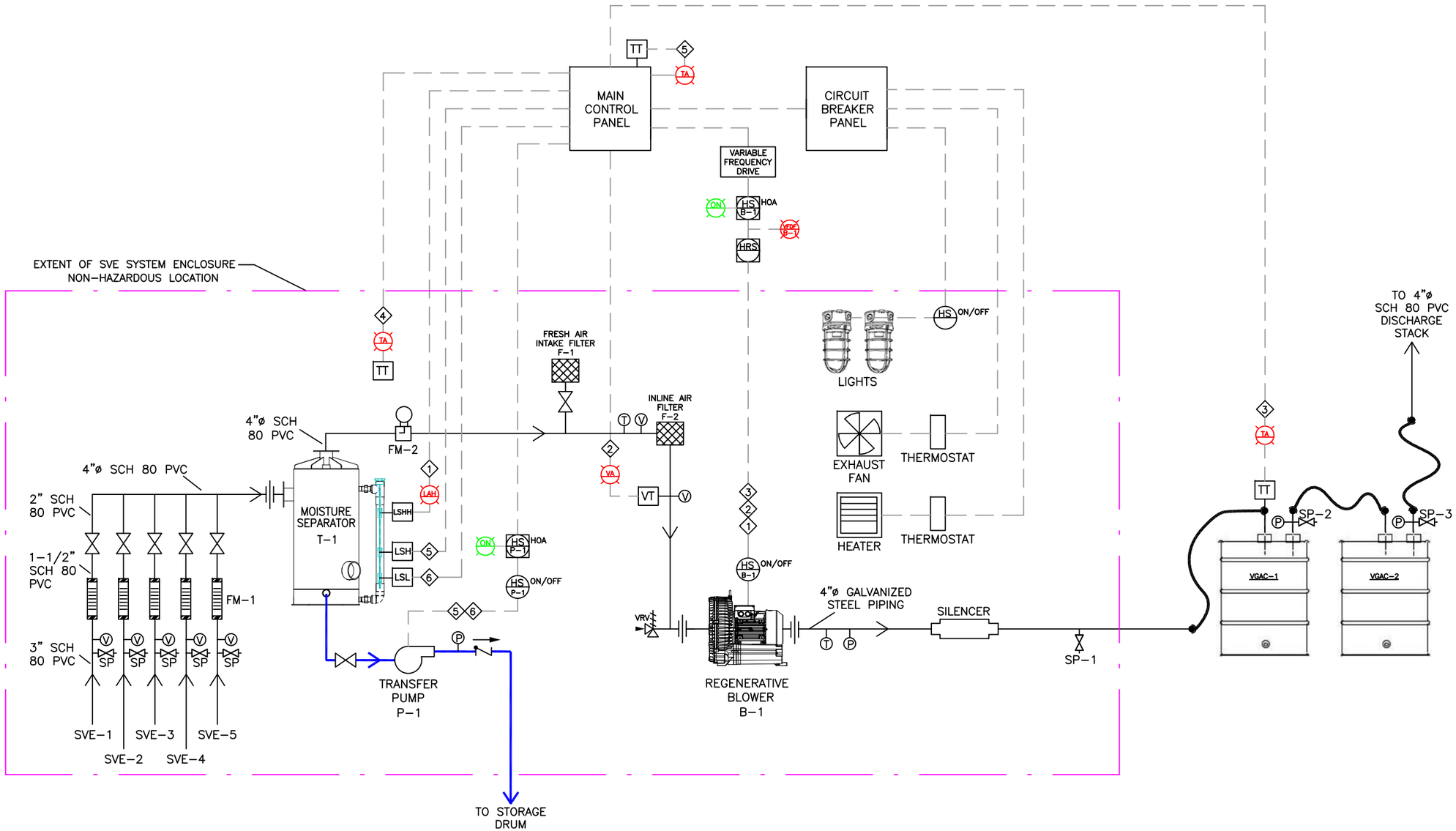

INDICATOR LIGHT INDEX:

- LAH — LEVEL ALARM HIGH
- VAL — VACUUM ALARM HIGH/LOW
- TA — TEMPERATURE ALARM
- VFDF B-1 — VFD FAULT
- ON — MOTOR RUN INDICATOR

INTERLOCK SCHEDULE:

1. HIGH LEVEL IN T-1 – SHUT DOWN B-1, SEND ALARM NOTIFICATION..
2. LOW OR HIGH BLOWER VACUUM – SHUT DOWN B-1, SEND ALARM NOTIFICATION.
3. HIGH GAC INFLUENT TEMPERATURE – SEND WARNING NOTIFICATION..
4. LOW OR HIGH ROOM TEMPERATURE – SEND WARNING NOTIFICATION.
5. HIGH CONTROL PANEL INTERIOR TEMPERATURE – SHUT DOWN B-1, SEND ALARM NOTIFICATION, RESTART WHEN PANEL TEMPERATURE DROPS BELOW 100 DEG F.
6. LEVEL AT LSH – SEND WARNING NOTIFICATION, ENABLE P-1 IN AUTO MODE.
7. LEVEL BELOW LSL – DISABLE P-1 IN AUTO MODE.

SYSTEM LEGEND:

- VACUUM GAUGE
- TEMPERATURE GAUGE
- PRESSURE GAUGE
- VENTURI FLOWMETER
- ROTAMETER FLOWMETER
- LS — LEVEL SWITCH
- VT — VACUUM TRANSMITTER
- TT — TEMPERATURE TRANSMITTER
- BALL VALVE
- SP — SAMPLE PORT
- VRV — VACUUM RELIEF VALVE
- CHECK VALVE
- UNION
- HS — HAND SWITCH PANEL MOUNTED
- HS — HAND SWITCH LOCALLY MOUNTED
- HRS — RUN TIME METER
- CONTROL PANEL INDICATOR LIGHT
- CONTROL PANEL INTERLOCK
- ELECTRIC LINE
- AIR FLOW DIRECTION
- CONDENSATE WATER FLOW DIRECTION
- ENCLOSURE LIMITS

DRAWN/REVISED BY: JW
REVISION DATE: MAY 22, 2017

FIGURE: 3

DRAWING TITLE

SOIL VAPOR EXTRACTION SYSTEM PROCESS AND INSTRUMENTATION DIAGRAM

PREPARED FOR

FORMER CLEANER PRODUCTS SUPPLY
50-45 BARNETT AVENUE
LONG ISLAND CITY, NEW YORK

EnviroTrac
ENVIRONMENTAL SERVICES
5 OLD DOCK ROAD, YAPHANK, NEW YORK 11980
PHONE: (631)924-3001 FAX: (631)924-5001

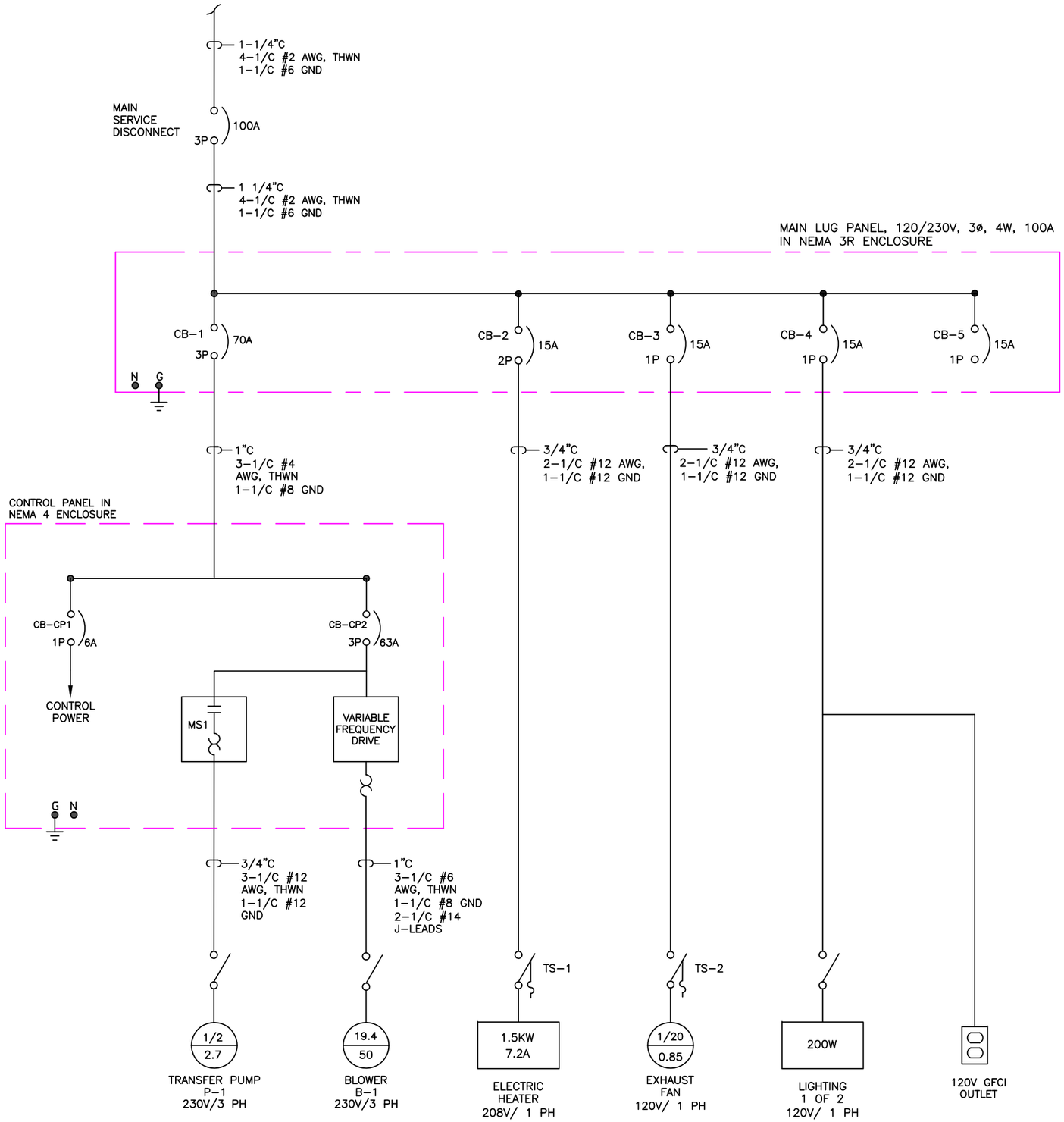

LEGEND:

- MS1 — FULL VOLTAGE NON-REVERSING MOTOR STARTER WITH OVERLOAD RELAY
- T — MOTOR STARTER AUXILIARY CONTACT
- HP / FLA — MOTOR HORSEPOWER FULL LOAD AMPS
- CB-X, 1P, 20A — CURCUIT BREAKER (RATINGS AS SHOWN)
- THERMOSTAT
- DISCONNECT SWITCH

SAMPLE BREAKER:

LABEL, CB-X, 1P, 20A, # OF POLES, AMPERAGE

DRAWN/REVISED BY: JW
REVISION DATE: MAY 2, 2017

FIGURE: E1

DRAWING TITLE

ELECTRICAL SINGLE LINE DIAGRAM

PREPARED FOR

FORMER CLEANER PRODUCTS SUPPLY
50-45 BARNETT AVENUE
LONG ISLAND CITY, NEW YORK

EnviroTrac
ENVIRONMENTAL SERVICES
5 OLD DOCK ROAD, YAPHANK, NEW YORK 11980
PHONE: (631)924-3001 FAX: (631)924-5001

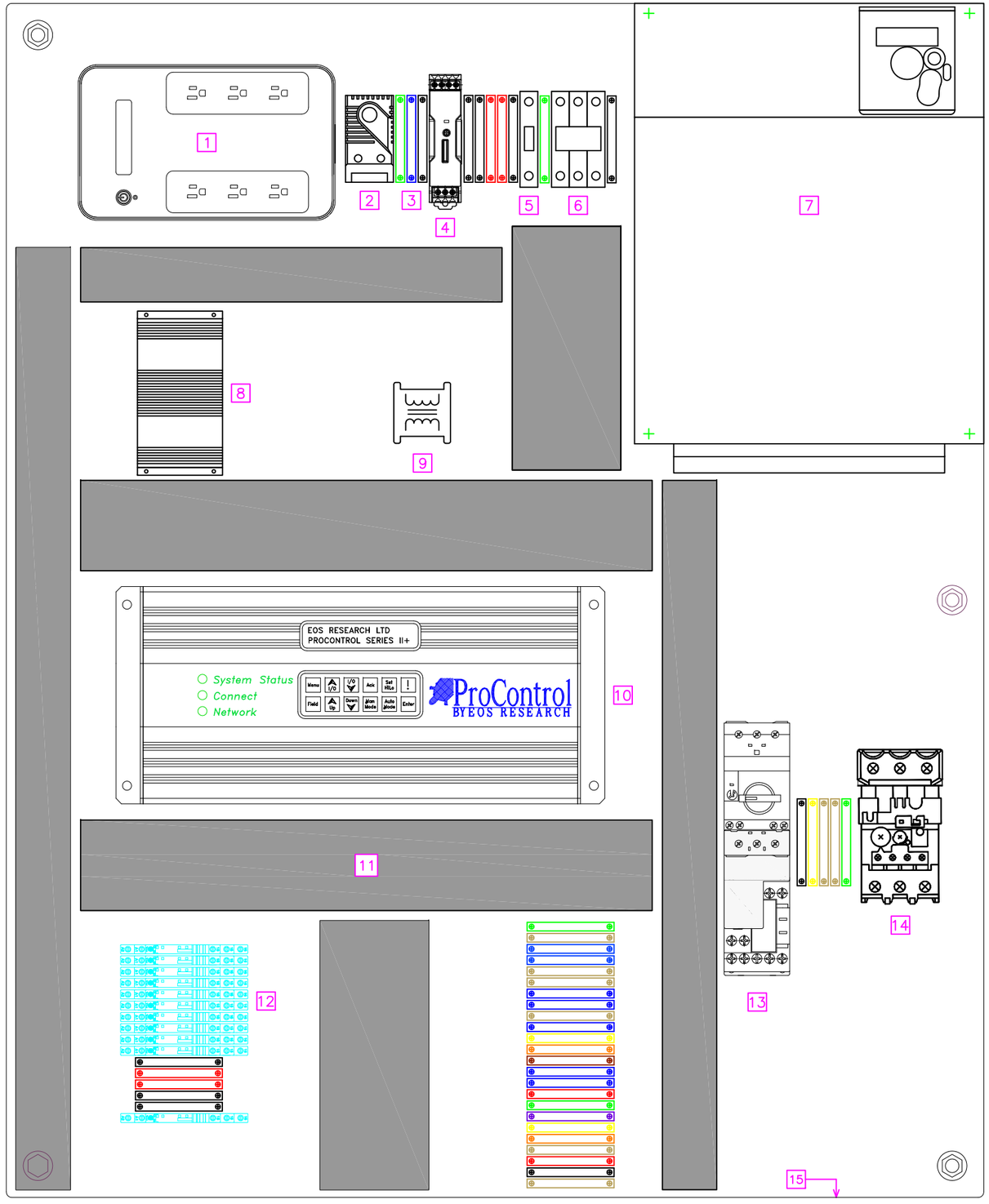

1. UPS BATTERY BACKUP: CYBERPOWER # CP350COM.

2. THERMOSTAT FOR ENCLOSURE VENT FAN: WIEGMANN # ETR201F.

3. 6MM WIRE TERMINAL BLOCKS (44): WEIDMULLER WDU4 SERIES.

4. 24VDC, 15-WATT POWER SUPPLY: OMRON #S8VK-G01524.

5. 6-AMP, 1-POLE, DIN-MOUNT CIRCUIT BREAKER: LOVATO # P1MBD63**.**

6. 63-AMP, 3-POLE, DIN-MOUNT CIRCUIT BREAKER: LOVATO # P1MBD6.

7. VARIABLE FREQUENCY DRIVE: SCHNEIDER ELECTRIC MODEL #ATV312HD15M3.

8. CELLULAR MODEM: MULTITECH MULTIMODEM MODEL #MTCMR-C2.

9. 10VCT POWER TRANSFORMER: SIGNAL TRANSFORMER MODEL #241-6-10.

10. PROGRAMMABLE LOGIC CONTROLLER: EOS RESEARCH PROCONTROL MODEL B1.

11. WIRE CHANNEL: IBOCO T1 DUCT SERIES.

12. FINDER SLIM LINE RELAYS AND SOCKETS (11):
RELAY - FINDER #34.51.7.024.0010
SOCKET - FINDER #93.01.0.024.

13. TRANSFER PUMP MANUAL MOTOR PROTECTOR AND CONTACTOR:
MOTOR PROTECTOR - EATON #XTPR2P5BC1
CONTACTOR - EATON #XTCE007B10
CONNECTION KIT - EATON #XTPAXTPCB

14. OVERLOAD RELAY FOR 20-HP BLOWER:
THERMAL OVERLOAD - ABB # TA75DU-52
MOUNTING KIT - ABB #DB80

15. CONTROL PANEL (CP1) COMPONENT BACKPLATE:
SIZE: 33" X 27", MATERIAL: ALUMINUM.
WIEGMANN # ALNP3630)

16. ENCLOSURE VENT FAN (NOT SHOWN): DAYTON MODEL #2RTK6.

DRAWN/REVISED BY: JW
REVISION DATE: MAY 17, 2017
DESIGNED BY: OL

FIGURE: E2

DRAWING TITLE

SVE CONTROL PANEL
INTERIOR LAYOUT

PREPARED FOR

NEW YORK STATE
DEPARTMENT OF ENVIRONMENTAL
CONSERVATION

PROJECT

FORMER CLEANER PRODUCTS SUPPLY
50-45 BARNETT AVENUE
LONG ISLAND CITY, NEW YORK

EnviroTrac
ENVIRONMENTAL SERVICES
5 OLD DOCK ROAD, YAPHANK, NEW YORK 11980
PHONE: (631)924-3001 FAX: (631)924-5001

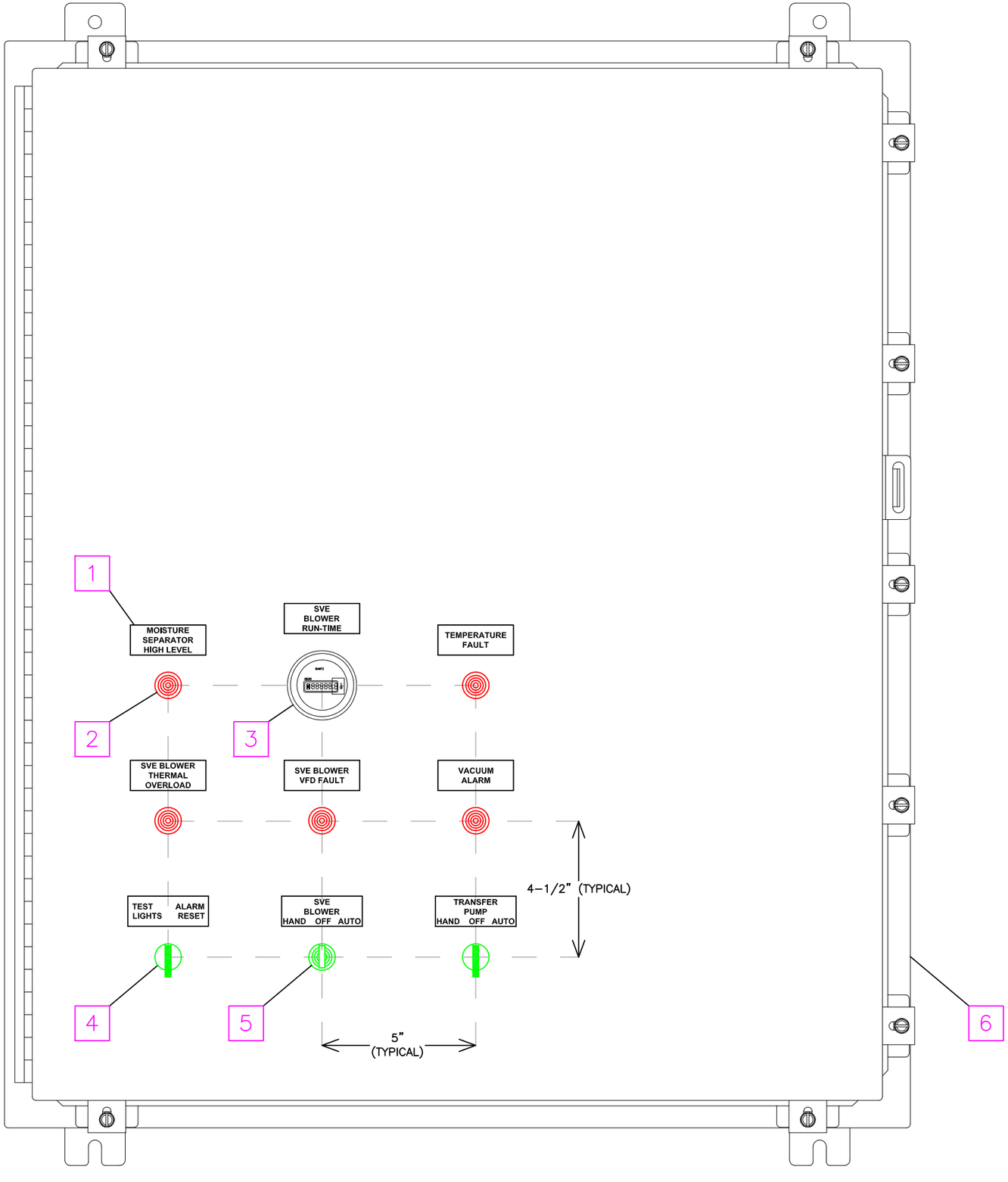

LEGEND

1. ENGRAVED PLASTIC LABEL:
2.25" x 1.0", 1/8" MIN LETTER SIZE, 2-3 ROWS OF TEXT.

2. PILOT ALARM LIGHTS:
IDEC - 22mm, TW SERIES, COLOR: RED
#AP_W2_99DR24V

3. RUN TIME HOUR METER:
CURTIS INSTRUMENTS
#700QN001048150D100230A

4. TRANSFER PUMP HOA AND COMBINATION LIGHT-TEST & ALARM RESET OPERATORS:
IDEC - 22mm, TW SERIES, 3-POSITION, SPRING RETURN FROM LEFT AND RIGHT, GREEN LEVER WITH WHITE INSERT.
#ASW33L11N

5. SVE BLOWER HOA ILLUMINATED OPERATOR:
IDEC - 22mm, TW SERIES, 3-POSITION, SPRING-RETURN FROM LEFT GREEN LENS #ASLW329911DN-423-G-24V

6. WIEGMANN 36" H x 30" W x 12" D, NEMA 4X ENCLOSURE.
ALN4363012

DRAWN/REVISED BY: JW
REVISION DATE: MAY 3, 2017
DESIGNED BY: OL

FIGURE: E3

DRAWING TITLE

SVE CONTROL PANEL
EXTERIOR LAYOUT

PREPARED FOR

NEW YORK STATE
DEPARTMENT OF ENVIRONMENTAL CONSERVATION

PROJECT

FORMER CLEANER PRODUCTS SUPPLY
50-45 BARNETT AVENUE
LONG ISLAND CITY, NEW YORK

EnviroTrac
ENVIRONMENTAL SERVICES
5 OLD DOCK ROAD, YAPHANK, NEW YORK 11980
PHONE: (631)924–3001 FAX: (631)924–5001

DISCRETE CONTROL CIRCUIT LADDER SCHEMATIC

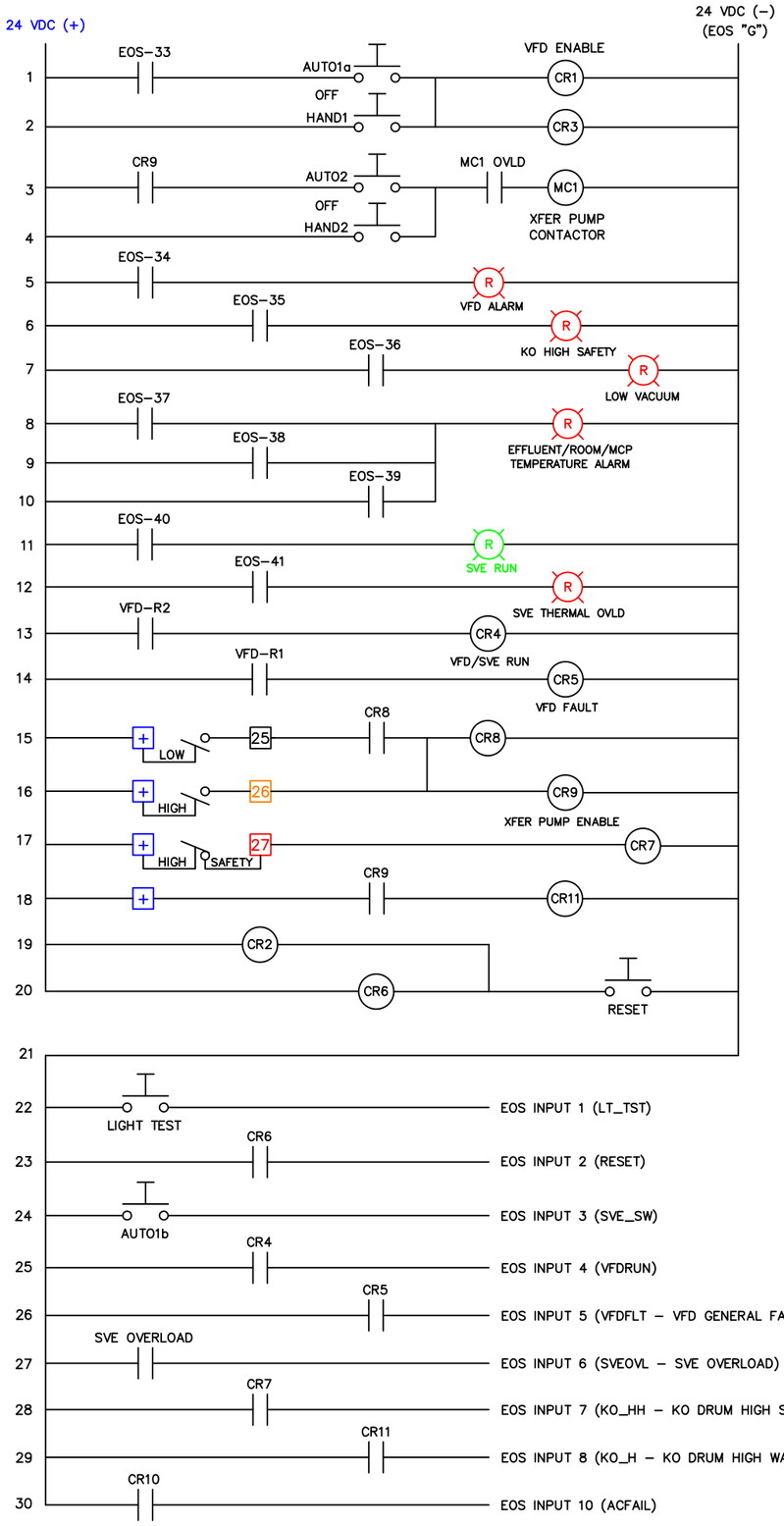

POWER DISTRIBUTION

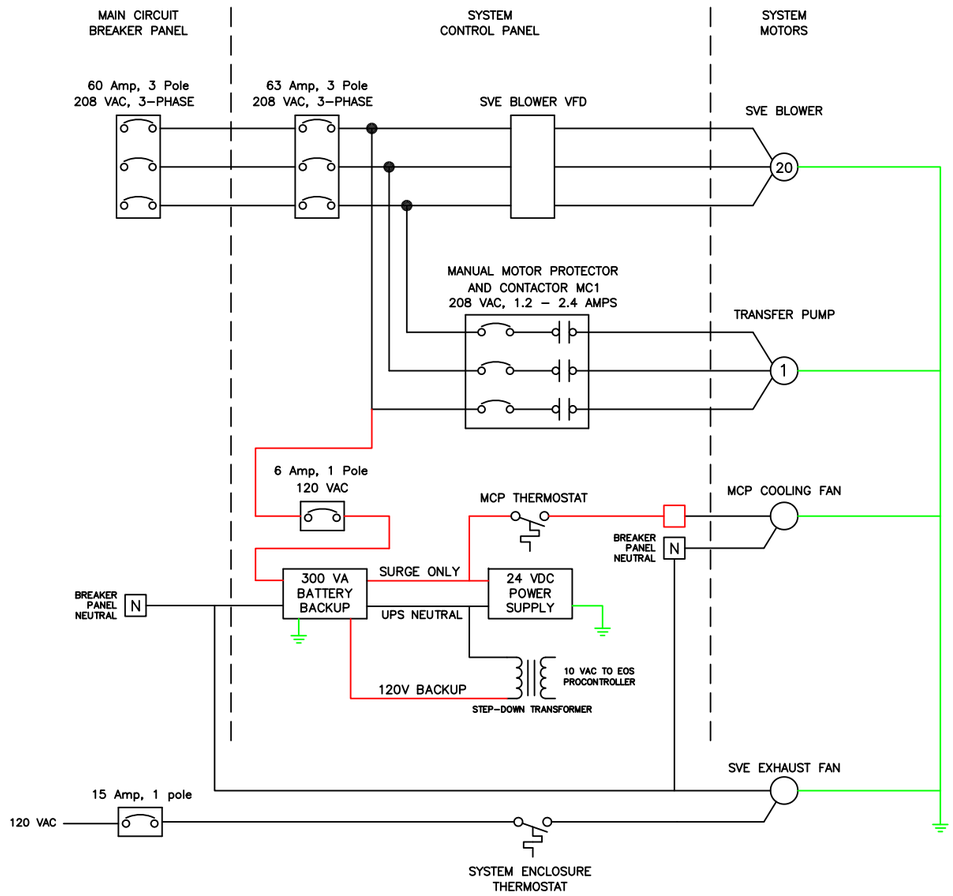

MCP TERMINAL BLOCKS & FIELD WRING

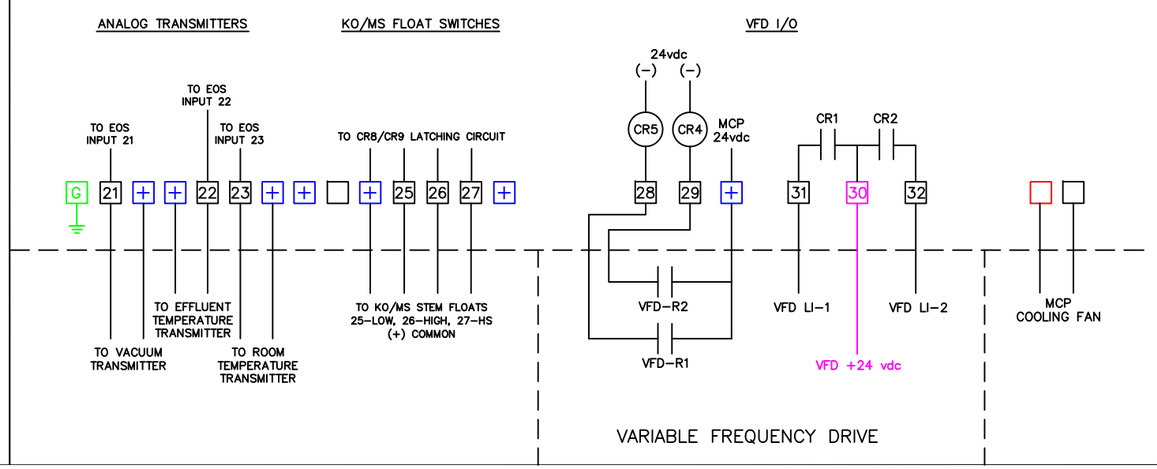

DRAWING LEGEND

- NORMALLY OPEN SWITCH
- CRx — CONTROL RELAY "x"
- R — RED LIGHT
- G — GREEN LIGHT
- NORMALLY CLOSED CONTACTS
- NORMALLY OPEN CONTACTS
- TERMINAL BLOCK
- CIRCUIT BREAKER
- COOLING THERMOSTAT (N.O.)
- NORMALLY OPEN FLOAT SWITCH
- NORMALLY CLOSED FLOAT SWITCH

PLC – PROGRAMABLE LOGIC CONTROLLER
EOS – PROPRIETARY PLC
MCP – MAIN CONTROL PANEL
EOS–"X" – PLC OUTPUT
VFD – VARIABLE FREQUENCY DRIVE
I/O – INPUT/OUTPUT
VFD–R1 – VFD FAULT RELAY
VFD–R2 – VFD RUNNING RELAY
KO/MS – KNOCK–OUT/MOISTURE SEPARATOR

VFD – SCHNIEDER ELECTRIC ALTIVAR 312
PLC – EOS PROCONTROLLER TYPE B1
ALL ANALOG TRANSMITTERS ARE 4–20mA, 24VDC

DRAWN/REVISED BY: OL
REVISION DATE: JULY 18, 2017
DESIGNED BY: OL

FIGURE: E4

DRAWING TITLE

MAIN CONTROL PANEL CONTROL SCHEMATIC

PREPARED FOR

NEW YORK STATE DEPARTMENT OF ENVIRONMENTAL CONSERVATION

PROJECT

FORMER CLEANER PRODUCTS SUPPLY
50-45 BARNETT AVENUE
LONG ISLAND CITY, NEW YORK

EnviroTrac
ENVIRONMENTAL SERVICES
5 OLD DOCK ROAD, YAPHANK, NEW YORK 11980
PHONE: (631)924–3001 FAX: (631)924–5001

Appendix B

Operation & Maintenance Data Sheet
Soil Vapor Extraction System
NYSDEC Barnett Ave
Long Island City, NY

EnviroTrac Environmental Services
5 Old Dock Road, Yaphank, NY 11980
(631)924-3001, Fax (631)924-5001

Date: **Arrival Time:**

Weather / Temp: **Departure Time:**

Technician / Operator:

System Status					
	Arrival	Departure			
SVE Blower (ON/OFF)			Hour Meter Total Runtime (hrs)		
Soil Vapor Extraction System					
Fresh Air Valve Open (%)			Total Influent Flow Rate (cfm)		
Air Filter Influent Vacuum ("H2O)			Blower Influent Temp (DEG F)		
Blower Influent Vacuum ("H2O)			Blower Effluent Temp (DEG F)		
Blower Effluent Pressure ("H2O)			Blower Effluent PID (ppm)		
GAC-1 Effluent Pressure ("H2O)			GAC-1 Effluent PID (ppm)		
GAC-2 Effluent Pressure ("H2O)			GAC-2 Effluent PID (ppm)		
Moisture Separator Level (gal)					
SVE Manifold Legs					
SVE-1 Vacuum ("H2O)			SVE-4 Vacuum ("H2O)		
SVE-1 Flow Rate (cfm)			SVE-4 Flow Rate (cfm)		
SVE-1 PID (ppm)			SVE-4 PID (ppm)		
SVE-1 Valve Open (%)			SVE-4 Valve Open (%)		
SVE-2 Vacuum ("H2O)			SVE-5 Vacuum ("H2O)		
SVE-2 Flow Rate (cfm)			SVE-5 Flow Rate (cfm)		
SVE-2 PID (ppm)			SVE-5 PID (ppm)		
SVE-2 Valve Open (%)			SVE-5 Valve Open (%)		
SVE-3 Vacuum ("H2O)					
SVE-3 Flow Rate (cfm)					
SVE-3 PID (ppm)					
SVE-3 Valve Open (%)					
Vacuum Influence Monitoring					
SV-107 (Shallow/Deep) Vacuum ("H2O)			SV-113 (Shallow/Deep) Vacuum ("H2O)		
SV-108 (Shallow/Deep) Vacuum ("H2O)			VP-1 Vacuum ("H2O)		
SV-109 (Shallow/Deep) Vacuum ("H2O)			VP-2 Vacuum ("H2O)		
SV-110 (Shallow/Deep) Vacuum ("H2O)			VP-3 Vacuum ("H2O)		
SV-111 (Shallow/Deep) Vacuum ("H2O)			VP-4 Vacuum ("H2O)		
SV-112 (Shallow/Deep) Vacuum ("H2O)					

Notes, Comments & Observations:

Operation & Maintenance Inspection Sheet for Soil Vapor Extraction System
FCPS, Site No. 241123, Barnett Ave, Long Island City, NY

Date: Arrival Time:
Weather/Temp: Departure Time:
Technician/Operator:

Component/Inspection Item	TAG	QTY	MFT	Model	Action	Frequency				Date Maintenance Action Performed
						Weekly	Monthly	Yearly	Other	
Over head piping	-	-	-	-	Inspect for any cracks, leaks, vandalism, secure attachment points	x	x			
Carbon Treatment vessels	VGAC-1, 2	2	Carbitrol	G-3	Inspect flexible hose connections, any vandalism, replace spent carbon	x	x			
Electric Panel		1			Inspect for loose connections, vandalism, etc.	x	x			
Moisture Separator	T-1	1	ESD Wast2Water	AWS80 47 gal	Inspect fluid level and pump as necessary, inspect high level switch for functionality		x			
Inline Air Filter	F-2	1	Solberg	4" 520 SCFM rating	Clean Filter		x			
					Replace Filter			x	or as needed	
Fresh Air Intake Filter	F-1	1	Solberg	4" 520 SCFM rating	Clean Filter		x		or as needed	
					Replace Filter			x	or as needed	
Regenerative Blower	B-1	1	AirTech	A 333 3BA1900-7AT16	Maintain in accordance with Section 1, Appendix A of the OM&M, (the O&M Manual)					
Flow meter	FM-2	1	Amtek	FM30C250Q	No Routine Maintenance needed					
Exhaust Fan thermostat	-	1	Dayton	SPDT	No Routine Maintenance needed					
Heater thermostat	-	1	Dayton	SPDT	No Routine Maintenance needed					
Exhaust Fan	-	1	Dayton	1HLA2 12" diameter	No Routine Maintenance needed					
Heater	-	1	Grainger		No Routine Maintenance needed					
Inlet Flowmeters	FM-1	5	Key Instruments	5A75, 10-110 scfm, 1-1/2" PVC	No Routine Maintenance needed					
Temperature transmitter	TT	2	Dwyer		No Routine Maintenance needed					
Pressure/Vacuum transmitter	VT	1	Dwyer		No Routine Maintenance needed					