2025 Periodic Preview Report

Tesa Tape Middletown Facility
NYSDEC Site # - 336056

135 Crotty Road
Middletown, New York, 10941

Submitted to:
Crotty Road LLC
PO Box 180
Monsey, NY 10952

Submitted by:
GEI Consultants, Inc.
400 Broadacres Drive, Ste. 310
Bloomfield, NJ 07003
973.873.7110

July 2026
Project No. 2003556

Dan Mullin
Project Professional

Paul Schatz
Senior Consultant, CPG

Table of Contents

1. Introduction 1
1.1. Site Background 1
1.1.1. Previous Areas of Concern 1
2. Site Overview 2
2.1. Summary of Remedial Actions 2
2.2. Remedy Performance, Effectiveness, and Protectiveness 2
3. SMP Requirements and Compliance Monitoring 4
3.1. Institutional and Engineering Control Plan Compliance 4
3.2. Institutional Control Plan Compliance 4
3.3. Engineering Control Plan Compliance 4
3.4. Inspections 5
3.5. IC/EC Certification 5
4. Conclusions and Recommendations 6

Figures

Figure 1 Site Location Map
Figure 2 Site Map
Figure 3 Cross Section
Figure 4 2020 Construction Detail Plans

Appendices

Appendix A Site Management Plan – April 2004/Declaration of Restrictive Covenant through May 18, 2006
Appendix B Progress Letter for September 2011 through October 2011
Appendix C New York State Department of Environmental Conservation IC/EC Certification Form
Appendix D Photo Log
Appendix E Kevin L. Patton, P.E. Geotechnical Investigation Report, dated July 19,2020
Appendix F Fill Import Request Forms

GEI_Report_Template_v3_2025_01-05
DM/PS:jg
\\bos1v-fs02\Data_Storage\Working\CROTTY ROAD LLC\2003556 Tessa Tape Crotty Road\Reports\NYSDEC Submission - 2025\2026 Updated PRR\July 2026 Comments Submittal\Crotty Rd_PRR_FINAL_2026-07-30.docx

1. Introduction

GEI Consultants, Inc. (GEI) has prepared this Periodic Review Report (PRR), on behalf of Crotty Road LLC, to document the post-remediation actions for the Former Tesa Tape Inc. Facility, located at 135 Crotty Road, Town of Wallkill, Orange County, New York, (herein referenced as the Site). The Site is identified as New York State Department of Environmental Conservation (NYSDEC) Site Number #336056 and this PRR was prepared in general accordance with the NYSDEC approved Site Management Plan (SMP), dated April 2004. The SMP was written to achieve objectives defined in the NYSDEC Technical and Administrative Guidance Memorandum HWR-94-4046, dated January 24, 1994. This PRR has been revised to address NYSDEC comments included in the April 2020 to April 2025 PRR Denial Letter dated January 26, 2025.

1.1. Site Background

The entire property is approximately 1,900 feet by 750 feet, and currently multiple structures are found on the Site. The property was previously developed with a former manufacturing process that consisted of saturating, coating, and converting pressure sensitive tapes. As part of this manufacturing process, toluene was used at the site beginning in 1985. Tape production at the Site was discontinued in January 2004, when Tesa Tape's retail customer base was sold to another tape manufacturer. The Site was maintained as commercial/industrial purposes by other tenants after the cessation of tape production activities. A SMP was approved by the NYSDEC dated April 2004 for the Site, which detailed the Site contamination conditions at that time, as well as the requirements for future monitoring and reporting. A copy of the SMP from April 2004 is included in **Appendix A**. Also found in **Appendix A** is the recorded Declaration of Restrictive Covenant dated May 18, 2006. See **Figure 1** for the Site Location Map, which shows the topography of the Site and the surrounding area.

1.1.1. Previous Areas of Concern

Seven areas of concern (AOC) previously were identified in association with the Site activities. Of these seven, only four were active at the time of the April 2004 SMP submittal.

- AOC-1: Loading Dock Area
- AOC-2: Solvent Storage Building
- AOC-3: Solvent Handling Area
- AOC-4: Coating Head Area

These AOCs were treated with two soil vapor extraction/air sparge systems located on the southwest corner of the property where soil and groundwater contamination was confirmed. NYSDEC approved the decommissioning of both systems on July 12, 2011. All soil vapor extraction/air sparge and monitoring wells have since been removed/abandoned at the Site, as documented in HDR's October 19, 2011 "Progress Letter for September 2011", submitted to Mr. Michael MacCabe at the NYSDEC. Currently no AOCs exist onsite that require active remedial efforts.

2. Site Overview

2.1. Summary of Remedial Actions

All four impacted AOCs were previously investigated and remedial actions taken prior to the April 2004 SMP implementation. Remedial actions included soil investigation/removal, soil vapor extraction/air sparge system installation, and groundwater investigations. The primary contaminant of concern at the Site is Toluene. As of the writing of this PRR, all remedial actions have been completed and approved by NYSDEC. No further remedial actions or investigations are required since the submittal of HDR's October 19, 2011, letter a copy of which is found in **Appendix B**.

2.2. Remedy Performance, Effectiveness, and Protectiveness

As described in the April 2004 NYSDEC approved SMP, soils impacted with Toluene remain onsite. These soils were placed under Institutional Controls (ICs) and Engineering Controls (ECs) to manage the exposure of workers and the public to these impacts.

The ICs and ECs for the Site included the SMP, site use restrictions, and groundwater use restrictions. These have been maintained from the inception of the SMP to 2020.

In late 2020, a building addition was added to the southwest corner of the existing building. To accommodate this addition, soil in the area of the restricted environmental easement was required to be disturbed to allow for the new footings of the addition to be installed. The construction of this addition consisted of the following activities:

Asphalt if the area of the building, as well as some asphalt nearby the proposed building, was removed to allow access to the underlying soils. Excavation of soil then took place in areas of proposed footings. Soils excavated from the footing areas were placed within the footprint of the new building, as this area needed to be raised for the final elevation of the building floor. Estimated amounts of re-used soil onsite for grading purposes are 150 cubic yards. No soils from the Site left the property. Soils were then compacted, and additional fill material was imported onsite to finish raising the area to the final grade for slab pouring. Imported material was virgin quarry stone from the former E. Tetz & Sons Inc. (Facility DEC ID 3-3322-0003/00004, Site # 7831). Approximately 1,325 cubic yards of a mixture of Chester ¾ & 3/8 #57 stone was brought onsite for grading purposes. Also note a typical Sieve analysis is attached in **Appendix F.**

A vapor barrier was then installed between the soils/fill material and the concrete floor. The concrete floor, which is 6- to 12-inches thick, was then poured. New asphalt around portions of the addition was then installed.

According to the property owner, construction diagrams and Geotechnical Investigation Report, included as **Appendix E**, the new addition is higher in elevation than the existing grade. This was pointed out in the same geotechnical report which was generated for the building of the addition. In the southwest corner, the elevation needed to be raised at least by 2.5 to 3 feet. Reviewing that same geotechnical

report, the material that existed could be used to back fill in the footprint of the addition. Based on this, all excavated material from the footings and utility trenches remained on site and inside the foot print of the addition.

In addition, the Geotechnical Investigation report also stated that there could be soil gases that could normally be expected to impact the structure i.e. water vapor and radon, therefore thorough foundation damp-proofing, consisting of placement of dense concrete in slabs-on-grade, (low water-to-cementitious ratio, thoroughly consolidated,) and sealing of all wall-to-slab joints, concrete cracks, pipe penetrations, drainage sumps, etc. was recommended as effective in controlling transmission of these gases to interior spaces. “The potential for these gases or other gases to adversely impact the use of the building is estimated to be low.”

Impacted materials are now capped by imported fill, a vapor barrier, and the concrete slab of the new building. See **Figure 4** for details, as well as the replacement asphalt. The addition to the building is still protective of human health and the environment. See **Figures 2** and **3** for the location and a cross section showing cap.

3. SMP Requirements and Compliance Monitoring

3.1. Institutional and Engineering Control Plan Compliance

ECs and ICs are required to protect human health and the environment. As detailed in the Declaration of Restrictive Covenants, several ICs are required for the Site, which are:

Land-Use Restriction: The Site will only be utilized for industrial/commercial uses.

Groundwater-Use Restriction: The use of groundwater for potable and non-potable purposes is prohibited; and

Implementation of the SMP is required.

The ECs consist of various capping material (concrete, asphalt) on locations of the property, as shown on **Appendix B** of the Declaration of Restrictive Covenants.

3.2. Institutional Control Plan Compliance

The ICs for the Site consist of Environmental Easement (EE) that includes land and groundwater use restrictions, an SMP, and certification reporting. The EE prohibits the use of the property for any means other than the use identified in the April 2004 SMP. The EE requires compliance with the SMP, including the periodic reporting covered by this report.

As documented earlier in this report, the implementation of the ICs has taken place. Groundwater and land use restrictions have continued to be implemented, as the groundwater is not utilized for potable or non-potable purposes and the use of the property has been for industrial and commercial uses. The SMP has also continued to be implemented, other than the construction of the recent building addition, as documented in Section 2.1.2. Fill Import Request forms, Change of Use Notification Form, and a revised SMP have been submitted to the NYSDEC in accordance with the comments included in the April 2020 to April 2025 PRR Denial Letter dated January 26, 2025.

3.3. Engineering Control Plan Compliance

Exposure to remaining impacted media is prevented by the Site protective cover. The type of cover varies across the Site and comprises of an asphalt pavement profile, concrete structural, or slab components.

As discussed previously, the Site's ECs were in place and inspected on the schedule approved by the NYSDEC, as documented in the PRRs. The only exception is the building addition that was constructed since the submission of the 2020 PRR, however upon completion of the building, the engineering controls (asphalt/concrete) were installed, thereby bringing the ECs back into compliance.

3.4. Inspections

In order to show compliance of the ICs and ECs, a PRR was submitted yearly until a request was submitted in 2011 to do them biennially. NYSDEC approved this request and the PRR was then submitted in 2013 and 2015. In 2015, a request was submitted and approved to do the PRR on a five-year timeframe. The last PRR was submitted in 2020 and this PRR is for the 2025 year. See **Appendix D** for a photo log of existing conditions in March 2025.

Annual inspections will be conducted following the submittal of this PRR to ensure the new additional locations are protective of human health and the environment.

During all previous inspections, no defects to the ECs were noted, with the most recent inspection being conducted on March 20, 2025.

3.5. IC/EC Certification

The NYSDEC IC/EC Certification Form has been completed for the May 2, 2020 to May 1, 2025 reporting period, a copy of which is provided in **Appendix C**.

4. Conclusions and Recommendations

Prior to the 2020 building addition, the ICs and ECs performed as designed, were effective, and were compliant with specifications described in the SMP. Post 2020 building addition the ECs were effectively put back in place and continue to operate as originally intended.

A revised SMP has been submitted to the NYSDEC for review in accordance with the comments included in the April 2020 to April 2025 PRR Denial Letter dated January 26, 2025. If requested by the NYSDEC, an updated Declaration of Restrictive Covenant will be filed documenting the 2020 addition and capping details to the existing environmental restrictive areas.

Figures

Figure 1 Site Location Map

Figure 2 Site Map

Figure 3 Cross Section

Figure 4 2020 Construction Detail Plans

0 2000 4000

SCALE, FEET

QUADRANGLE LOCATION

SOURCE:

USGS TOPOGRAPHIC QUADRANGLE, 7.5 MINUTE SERIES: GOSHEN, NY, 2023
NORTH AMERICAN VERTICAL DATUM OF 1988 (NAVD 88)
10-FOOT CONTOUR INTERVAL

Periodic Review Report 135 Crotty Road Middletown, New York	GEI Consultants	SITE LOCATION MAP
Crotty Road LLC Middletown, New York	Project 2003556	March 2026 Fig. 1

CHO, CHRIS B:\Working\CROTTY ROAD LLC\2003556 Tessa Tape Crotty Road\00_CAD\Figures\PRR\1 2003556 PRR slm_2026.03.10.dwg - 3/10/2026

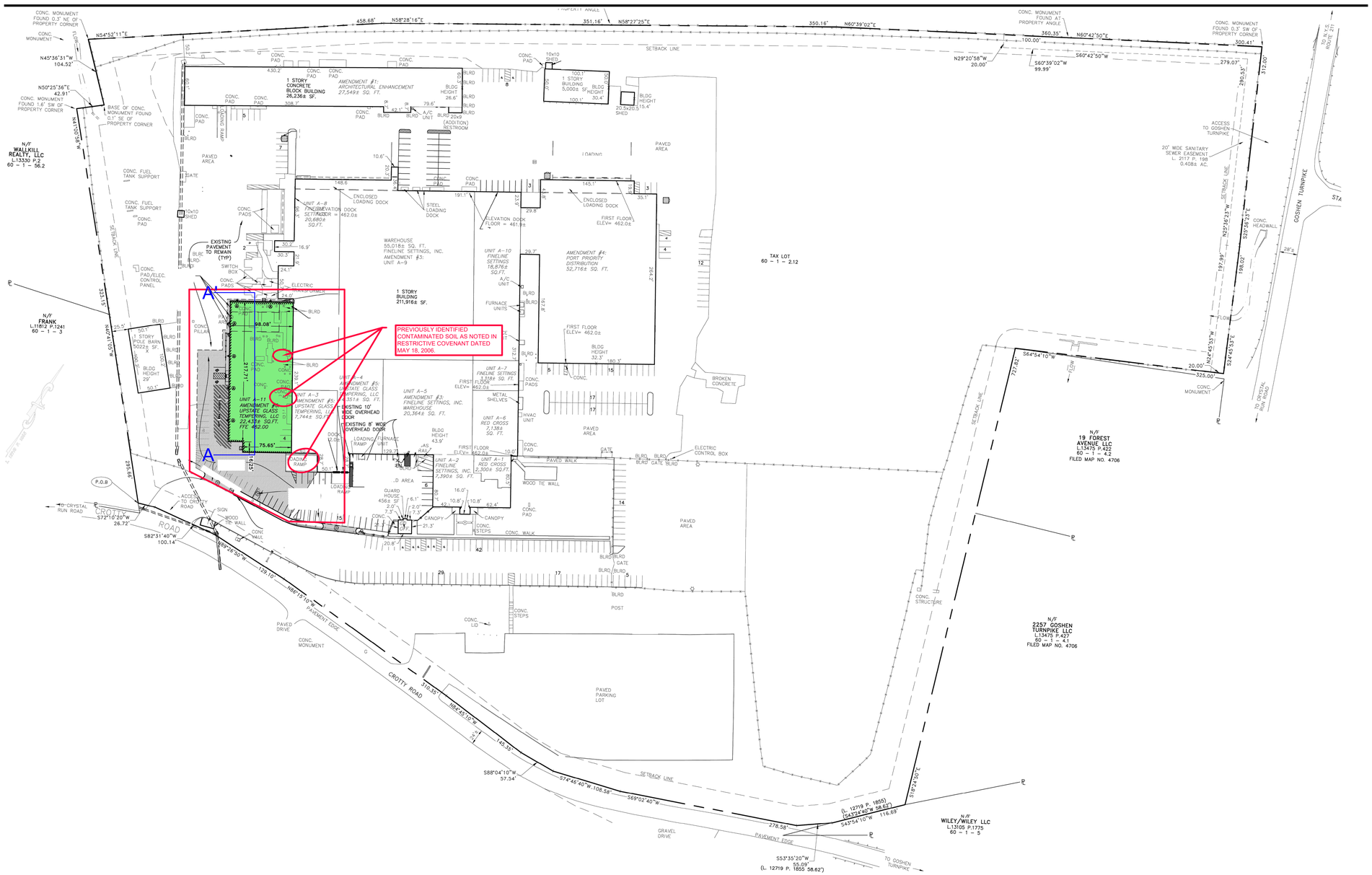

LEGEND:

- LATERAL EXTENT OF IMPORTED AND RE-USED FILL FOR NEW BUILDING ADDITION COMPLETED IN 2020
- 50-FOOT RESTRICTED AREA BUFFER - AS SHOWN ON APPENDIX B. DECLARATION OF RESTRICTED AREA DATED MAY 18, 2006.
- A——A CROSS-SECTION EXTENTS

SOURCE:

1. PLAN BASED ON MAP PREPARED BY LANC & TULLY TITLED *AMENDMENT 6 SITE PLAN PREPARED FOR CROTTY ROAD LLC, FOR THE ADDITION TO UPSTATE GLASS TEMPERING.*

0 80 160
SCALE, FEET

Periodic Review Report 135 Crotty Road Middletown, New York	GEI Consultants	SITE MAP
Crotty Road LLC Middletown, New York	Project 2003556	March 2026 Fig. 2

CHO, CHRIS B:\Working\CROTTY ROAD LLC\2003556 Tessa Tape Crotty Road\00_CAD\Figures\PRR\2-3 2003556 PRR Site and XSC_2026.03.10.dwg - 3/18/2026

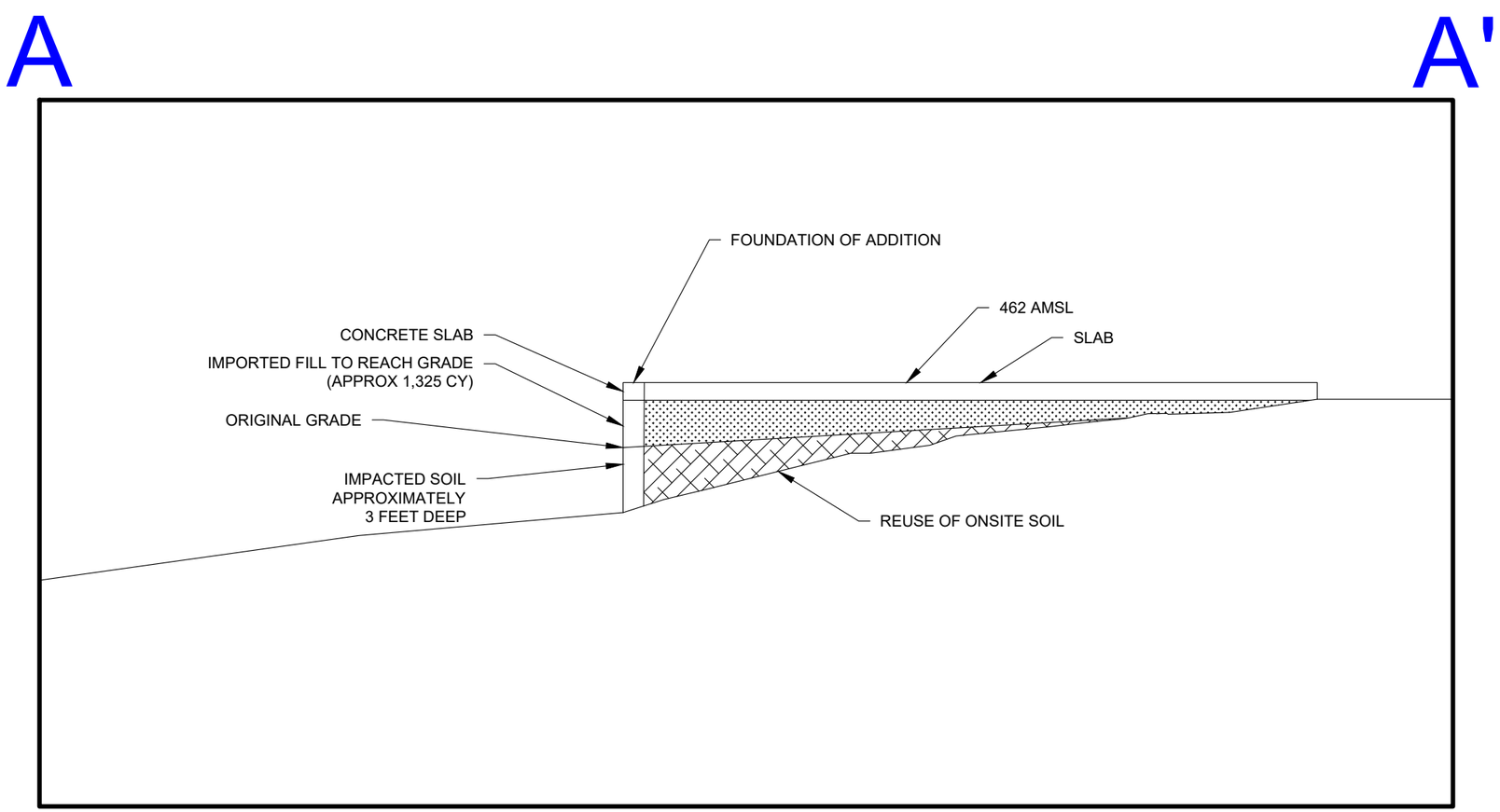

LEGEND:

A——A' CROSS SECTION A TO A'

NOTES:

1. AMSL = ABOVE MEAN SEA LEVEL (ESTIMATED).

Periodic Review Report 135 Crotty Road Middletown, New York	GEI Consultants	CROSS SECTION
Crotty Road LLC Middletown, New York	Project 2003556	July 2026 Fig. 3

CHO, CHRIS B:\Working\CROTTY ROAD LLC\2003556 Tessa Tape Crotty Road\00_CAD\Figures\PRR\2-3 2003556 PRR Site and XSC_2026.07.21.dwg - 7/21/2026

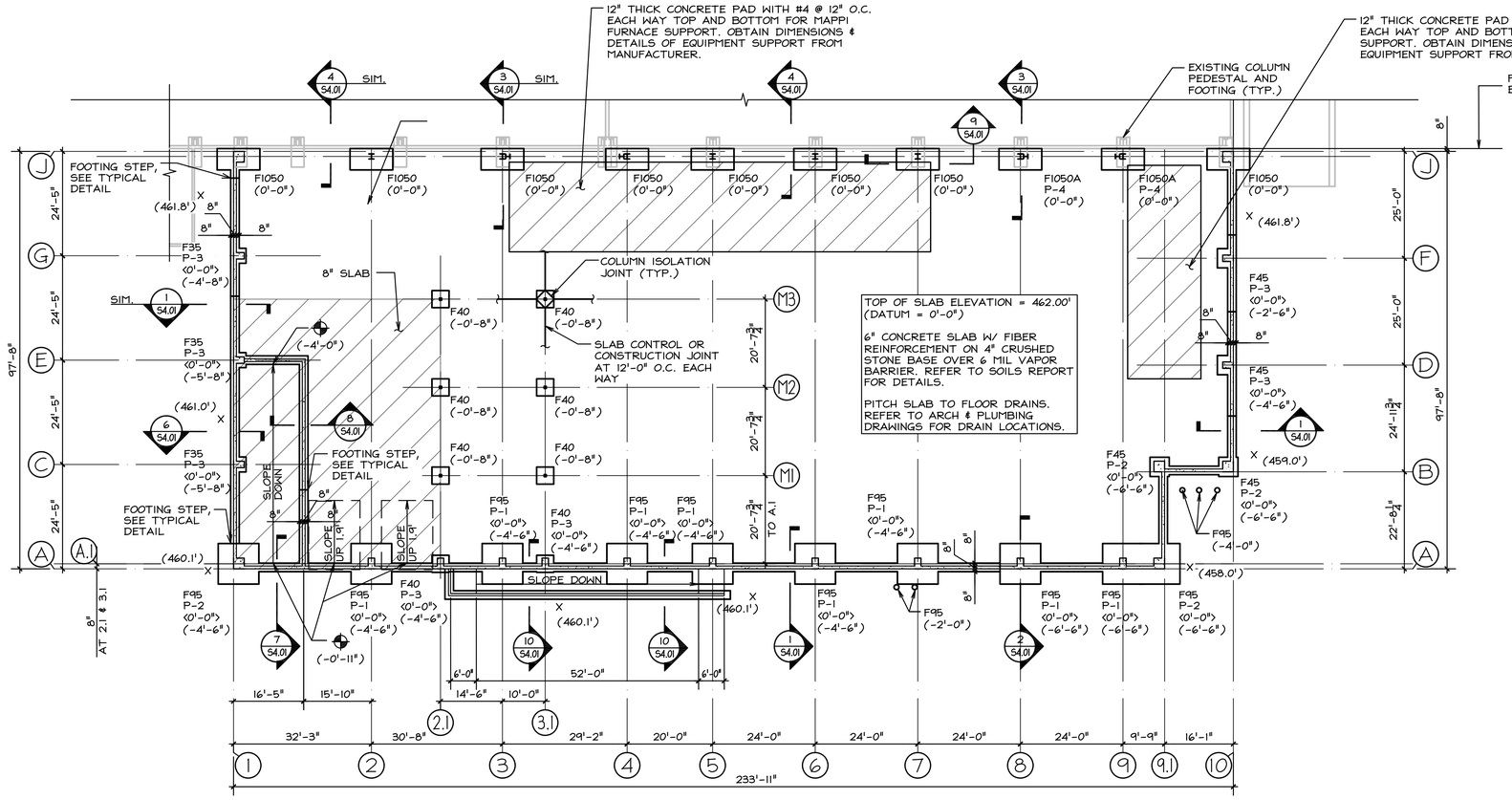

FOUNDATION PLAN

SCALE: 1/16" = 1'-0"

10/22/2020 REVISION NARRATIVE

1. REVISED FOOTING & PEDESTAL DESIGN TO ACCOMMODATE BUILDING COLUMN REACTIONS.
2. ADDED RAMP & EXTERIOR STAIR FOOTINGS.
3. REVISED FOOTING ELEVATIONS & EXTERIOR GRADES.

FOUNDATION SCHEDULE

MARK	DESCRIPTION
P-1	38"x25" CONCRETE COLUMN PEDESTAL W/ (8)-#5 VERTICAL & #3 TIES @ 12" O.C.
P-2	38"x38" CONCRETE COLUMN PEDESTAL W/ (12)-#5 VERTICAL & #3 TIES @ 12" O.C.
P-3	30"x25" CONCRETE COLUMN PEDESTAL W/ (6)-#5 VERTICAL & #3 TIES @ 12" O.C.
( )	DENOTES TOP OF FOOTING ELEVATION REFERENCED FROM DATUM
< >	DENOTES TOP OF PEDESTAL ELEVATION REFERENCED FROM DATUM
◆( )	ON PLAN INDICATES FINISHED FLOOR ELEVATION REFERENCED FROM 0'-0" AS DATUM.
x 100.00'	DENOTES APPROXIMATE FINISHED GRADE ELEVATION. SEE SITE PLAN FOR FURTHER INFORMATION.

FOUNDATION NOTES

1. BOTTOM OF ALL EXTERIOR FOOTINGS SHALL BE A MINIMUM OF 3'-6" BELOW FINISHED GRADE. VERIFY FINISHED GRADE PRIOR TO THE START OF CONSTRUCTION.
2. TOP OF EXTERIOR COLUMN FOOTING ELEVATIONS SHALL MATCH TOP OF WALL FOOTING ELEVATIONS. BOTTOM OF COLUMN FOOTING SHALL BE ADJUSTED FOR DEPTH OF FOOTING.
3. TOP OF ALL INTERIOR COLUMN FOOTINGS SHALL BE 8" BELOW FINISHED FLOOR SLAB ELEVATION (U.N.O.).
4. ALL FOOTINGS ARE DESIGNED FOR A MINIMUM SOIL BEARING CAPACITY OF 3,000 PSF. BOTTOM OF FOOTING ELEVATION MAY BE LOWERED TO ACHIEVE THE MINIMUM REQUIRED BEARING CAPACITY.
5. COORDINATE LOCATION & DEPTH OF UTILITIES PASSING THROUGH FOUNDATION WALL. REFER TO TYPICAL PIPE SLEEVE DETAIL ON DRAWING S-5.
6. ELEVATIONS ON PLAN ARE REFERENCED FROM TOP OF FLOOR SLAB = 0'-0" AS DATUM, ACTUAL ELEVATION = 462.00'.
7. REFER TO DRAWINGS S6.01 FOR GENERAL NOTES, TYPICAL DETAILS AND SECTIONS.
8. THE CONTRACTOR SHALL LOCATE & IDENTIFY ALL EXISTING UTILITIES & OBSTRUCTIONS WITHIN THE WORK AREA PRIOR TO THE START OF WORK. NOTIFY THE ENGINEER OF ANY CONFLICTS WITH THE WORK BEFORE PROCEEDING.

FOOTING SCHEDULE

FOOTING MARK	FOOTING SIZE	REINFORCING (EACH WAY)	REMARKS
F1	14" DIA. STAIR FOOTING	(NO REINFORCING)	
F35	3'-6" x 3'-6" x 1'-0"	(5) - #5	
F40	4'-0" x 4'-0" x 1'-4"	(6) - #5	
F45	4'-6" x 4'-6" x 1'-2"	(5) - #6	
F70	7'-0" x 7'-0" x 1'-8"	(7) - #8	
F95	9'-6" x 9'-6" x 2'-0"	(11) - #8	
F1050	10'-0" x 5'-0" x 2'-6"	(8) - #8 (LONG WAY) & (14) - #8 (SHORT WAY)	

FLOOR SLAB

PROVIDE 6" CONCRETE SLAB W/ FIBER REINFORCEMENT FOR GENERAL FLOOR AREA.

PROVIDE 8" CONCRETE SLAB W/ #4 @ 12" O.C. EACH WAY (CENTERED) FOR LOADING DOCK AREA AS SHOWN

PROVIDE 12" THICK CONCRETE PAD W/ #4 @ 12" O.C. EACH WAY TOP & BOTTOM FOR COMBIFLEX & MAPPI FURNACE.

PRE-ENGINEERED BUILDING NOTES

1. THE BUILDING MANUFACTURER SHALL PROVIDE A LISTING OF THE MAXIMUM & MINIMUM NET VERTICAL AND HORIZONTAL LOADS FOR EACH COLUMN IN TABLE FORM.
2. ANCHOR BOLTS SHALL HAVE A MINIMUM EDGE DISTANCE OF 8" AND A MINIMUM SPACING OF 8 BOLT DIAMETERS FOR ALL COLUMNS WITH NET UPLIFT.

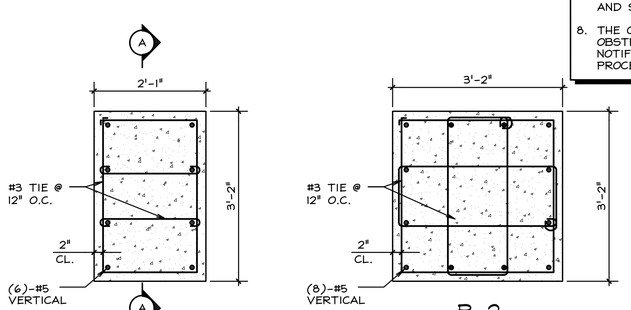

COLUMN PEDESTAL DETAILS

NOT TO SCALE

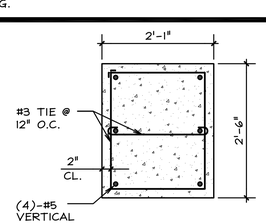

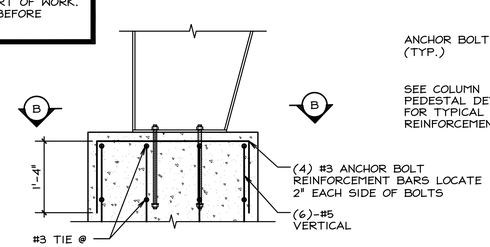

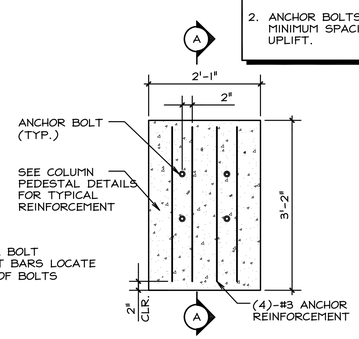

PEDESTAL ANCHOR REINFORCEMENT

NOT TO SCALE

Micucci Engineering, P.C.
Consulting Structural Engineers
265 South Little Tor Road, Suite 207
New City, New York 10956
Phone: (845) 639-5700
Job No.: 19116 Dwg. 1 of 5

MARK S. MICUCCI, P.E.
N.Y. License No. 063504

Date	01/27/20
Checked	MSM
Drawn	CP

MICHAEL J. McGOVERN, R.A.
Title REGISTERED ARCHITECT License No. 022257-1

Revisions:
10/22/2020
SEE NARRATIVE

UNAUTHORIZED ALTERATIONS OR ADDITIONS TO THIS DOCUMENT IS A VIOLATION OF SECTION 7209 OF THE NEW YORK STATE EDUCATION LAW. THESE DOCUMENTS REMAIN THE EXCLUSIVE PROPERTY OF THE ENGINEER, AND MAY NOT BE USED FOR ANY PURPOSE WHATSOEVER WITHOUT THE WRITTEN CONSENT OF THE ENGINEER.

LAN ASSOCIATES
engineering • planning • architecture • surveying
252 MAIN STREET, GOSHEN, NEW YORK 10924 (845)615-0350

FOUNDATION PLAN
EXPANSION OF UPSTATE GLASS
135 Crotty Road
Town of Wallkill, New York

Job No. 4.1196.06
File No. 19116 S2.01

S2.01

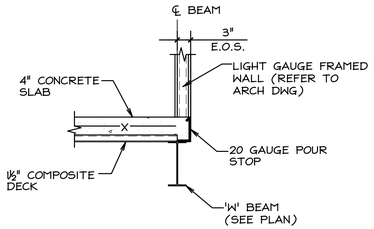

SECTION (1/52.02)
SCALE: 3/4" = 1'-0"

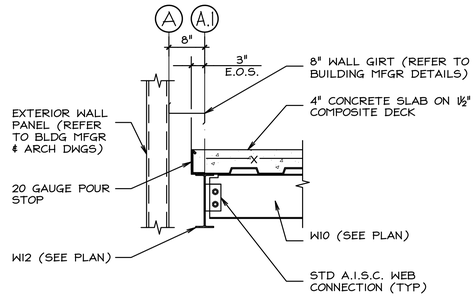

SECTION (2/52.02)
SCALE: 3/4" = 1'-0"

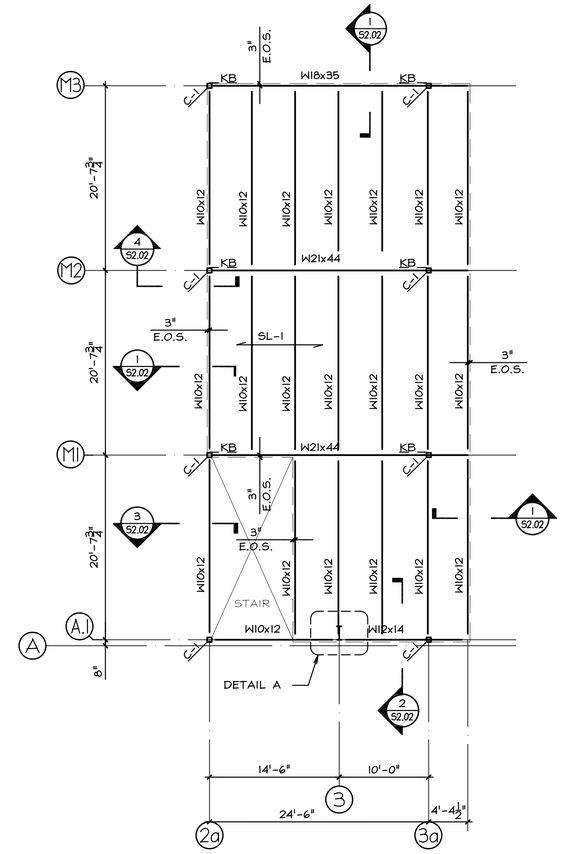

MEZZANINE FRAMING PLAN
SCALE: 1/8" = 1'-0"

TOP OF SLAB ELEVATION = +12'-3" (474.25)

TOP OF STEEL ELEVATION = (+11'-11")

DESIGN LOADS: DEAD LOAD = 50PSF
LIVE LOAD = 100PSF

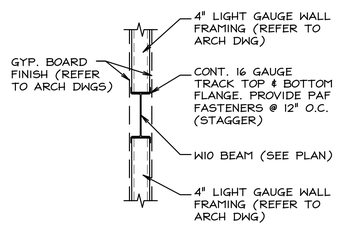

SECTION (3/S2.02)
SCALE: 3/4" = 1'-0"

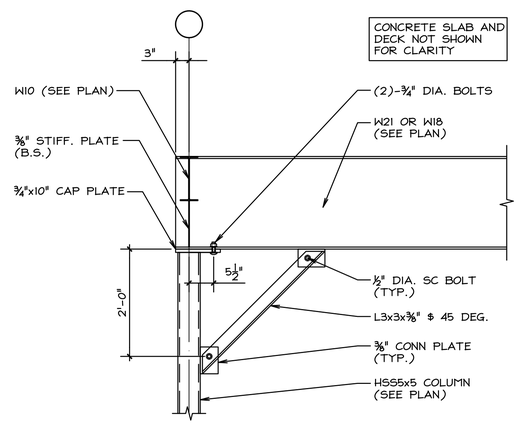

SECTION (4/S2.02)
SCALE: 3/4" = 1'-0"

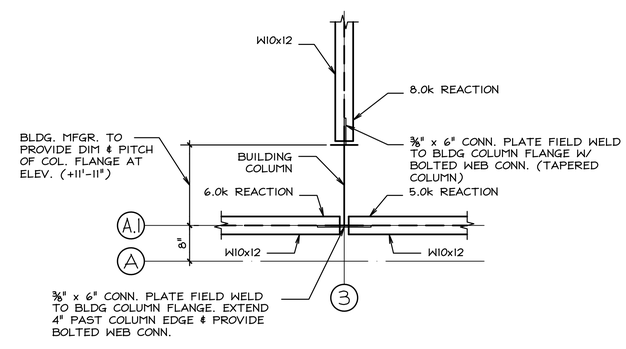

DETAIL A
SCALE: 3/4" = 1'-0"

MEZZANINE FRAMING SCHEDULE

MARK	DESCRIPTION
SL-1	4" CONCRETE SLAB W. W.W.F 6"x6" W2.1 x W2.1 ON 1½"-20 GA. COMPOSITE METAL FLOOR DECK (GALVANIZED)
C-1	HSS 5 x 5 x ⅜" WITH ¾" x 12" x 1'-0" BASE PLATE W/ (4)-¾" DIA. ANCHOR BOLTS, SEE TYPICAL DETAIL
KB	L3x3x⅜" KNEE BRACE @ 45 DEG. REFER TO DETAIL

FRAMING NOTES

1. STEEL BEAMS ARE TO BE EQUALLY SPACED WITHIN BAYS, UNLESS NOTED OTHERWISE. THE CONTRACTOR SHALL LOCATE ALL FLOOR PENETRATIONS AND OPENINGS FOR PLUMBING AND MECHANICAL WORK ON THE STEEL SHOP DRAWINGS PRIOR TO SUBMISSION FOR REVIEW.
2. ELEVATIONS ON PLAN ARE REFERENCED FROM FIRST FLOOR SLAB = 0'-0" AS DATUM, ACTUAL ELEVATION = 462.0ft.
3. REFER TO DRAWING S4.01 & S6.01 FOR GENERAL NOTES AND TYPICAL DETAILS.

Micucci Engineering, P.C.
Consulting Structural Engineers
265 South Little Tor Road, Suite 207
New City, New York 10956
Phone: (845) 634-9100
Job No.: 19116 Dwg. 2 of 5
MARK STEVEN MICUCCI
N.Y. License No. 083504

Date	01/27/20
Checked	MSM
Drawn	CP

MICHAEL J. McGOVERN, R.A.
Title REGISTERED ARCHITECT
License No. 022257-1

Revisions:

UNAUTHORIZED ALTERATIONS OR ADDITIONS TO THIS DOCUMENT IS A VIOLATION OF SECTION 7209 OF THE NEW YORK STATE EDUCATION LAW. THESE DOCUMENTS REMAIN THE EXCLUSIVE PROPERTY OF THE ENGINEER, AND MAY NOT BE USED FOR ANY PURPOSE WHATSOEVER WITHOUT THE WRITTEN CONSENT OF THE ENGINEER.

LAN ASSOCIATES
engineering • planning • architecture • surveying
252 MAIN STREET, GOSHEN, NEW YORK 10924 (845)615-0350

MEZZANINE FRAMING PLAN & DETAILS
EXPANSION OF UPSTATE GLASS
135 Crofty Road
Town of Wallkill, New York

Job No. 4.1196.06

File No. 19116 S2.02

S2.02

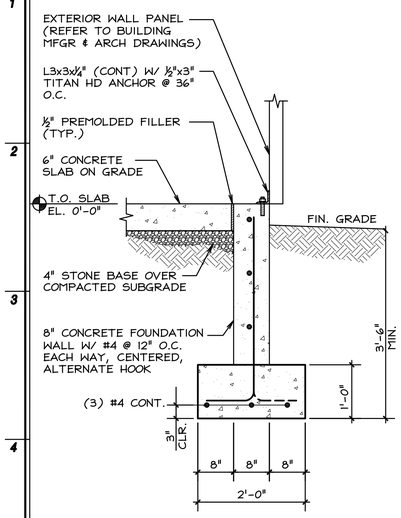

SECTION (1/54.01)
SCALE: 3/4" = 1'-0"

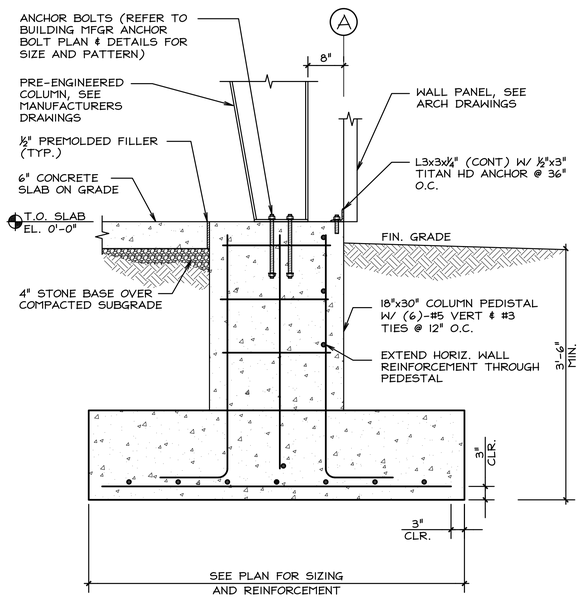

SECTION (2/54.01)
SCALE: 3/4" = 1'-0"

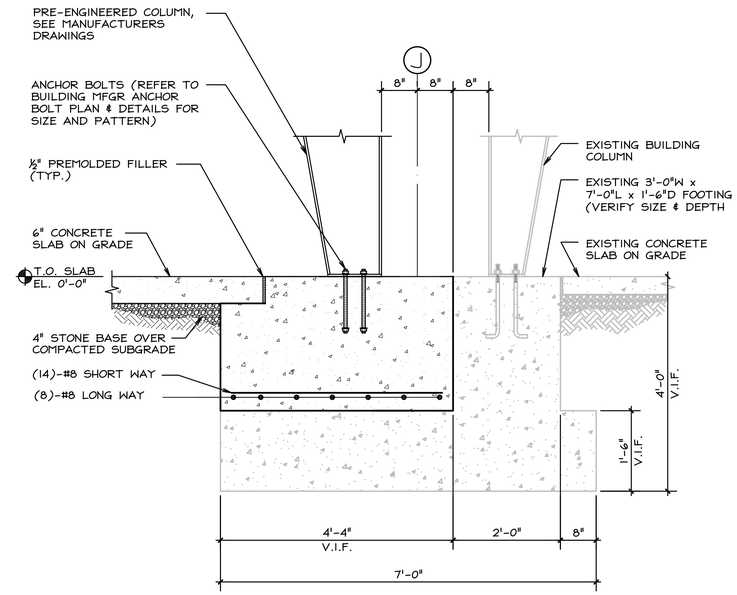

SECTION (3/54.01)
SCALE: 3/4" = 1'-0"

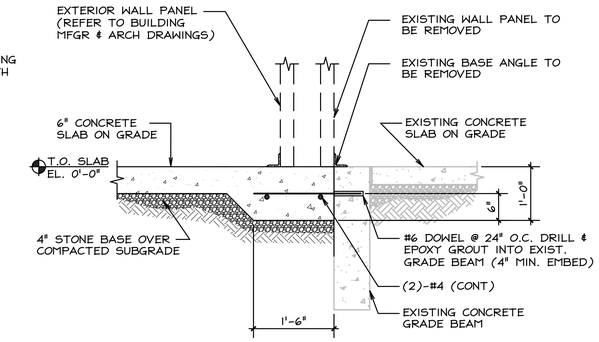

SECTION (4/54.01)
SCALE: 3/4" = 1'-0"

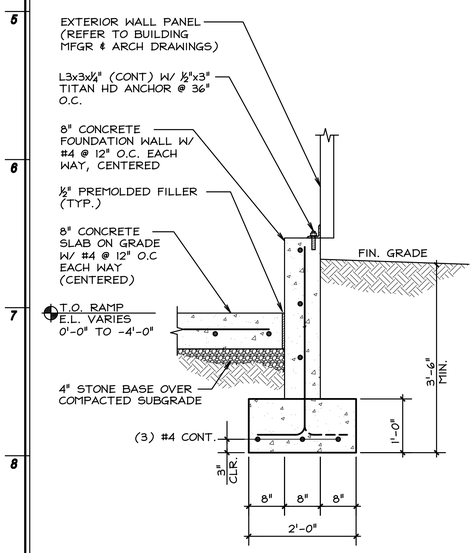

SECTION (6/54.01)
SCALE: 3/4" = 1'-0"

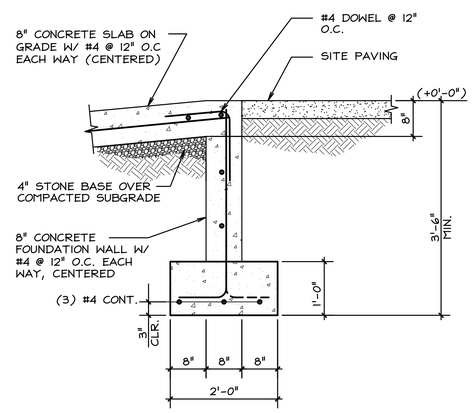

SECTION (7/54.01)
SCALE: 3/4" = 1'-0"

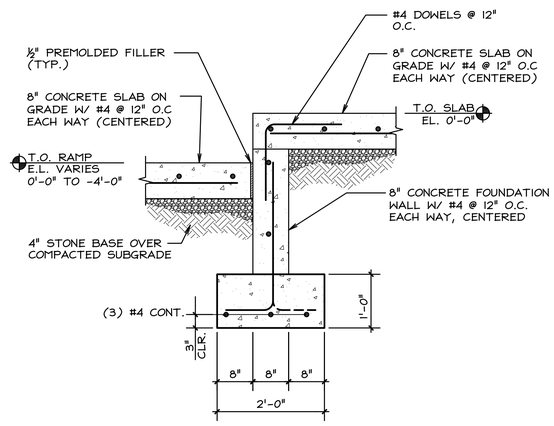

SECTION (8/54.01)
SCALE: 3/4" = 1'-0"

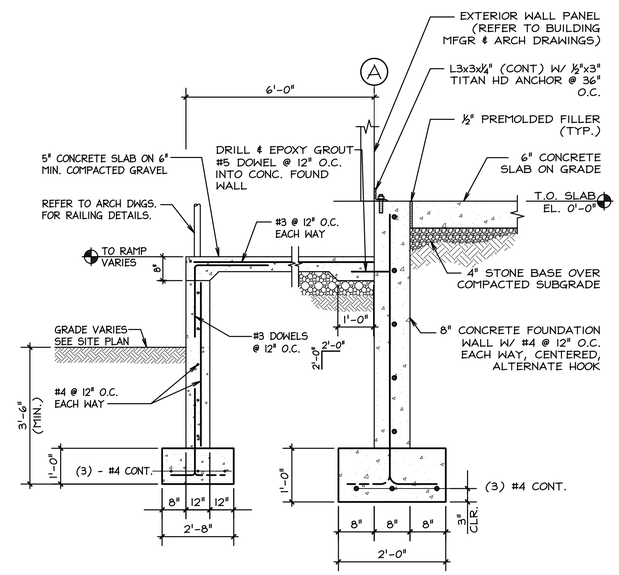

TYPICAL EXTERIOR RAMP SECTION

SECTION (10/54.01)
SCALE: 3/4" = 1'-0"

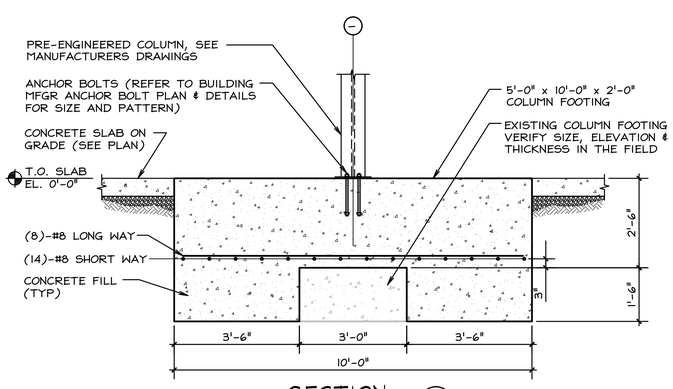

SECTION (9/54.01)
SCALE: 1/2" = 1'-0"

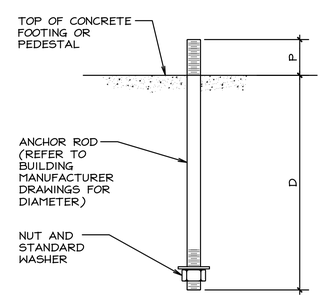

'P': ROD PROJECTION - REFER TO BUILDING MANUFACTURER DRAWINGS & DETAILS.

'D': EMBEDMENT DEPTH - REFER TO ANCHOR BOLT SCHEDULE.

TYPICAL ANCHOR BOLT DETAIL
NOT TO SCALE

ANCHOR BOLT SCHEDULE

BOLT DIAMETER	EMBEDMENT DEPTH	REMARKS
1"	16"	
¾"	12"	

BUILDING MANUFACTURERS TO LOCATE ANCHOR BOLTS A MINIMUM OF 8" FROM EDGE OF CONCRETE FOR ALL COLUMNS WITH LATERAL LOAD REACTION AND A MINIMUM OF 8 BOLT DIAMETER SPACING FOR ALL COLUMNS WITH NET UPLIFT

Micucci Engineering, P.C.
Consulting Structural Engineers
265 South Little Tor Road, Suite 207
New City, New York 10956
Phone: (845) 625-9100
Job No.: 19116 Dwg. 3 of 5
STATE OF NEW YORK · MARK STEVEN MICUCCI · 063504
MARK S. MICUCCI, P.E.
N.Y. License No. 063504

Date	01/27/20
Checked	MSM
Drawn	CP

MICHAEL J. McGOVERN, R.A.
Title REGISTERED ARCHITECT
License No. 022257-1

Revisions:
10/22/2020
ADDED SECTION

UNAUTHORIZED ALTERATIONS OR ADDITIONS TO THIS DOCUMENT IS A VIOLATION OF SECTION 7209 OF THE NEW YORK STATE EDUCATION LAW. THESE DOCUMENTS REMAIN THE EXCLUSIVE PROPERTY OF THE ENGINEER, AND MAY NOT BE USED FOR ANY PURPOSE WHATSOEVER WITHOUT THE WRITTEN CONSENT OF THE ENGINEER.

LAN ASSOCIATES
engineering • planning • architecture • surveying
252 MAIN STREET, GOSHEN, NEW YORK 10924 (845)615-0350

SECTIONS
EXPANSION OF UPSTATE GLASS
135 Crotty Road
Town of Wallkill, New York

Job No. 4.1196.06
File No. 19116 S4.01

S4.01

GENERAL

ALL CONSTRUCTION SHALL BE IN ACCORDANCE WITH THE REQUIREMENTS OF "THE 2015 INTERNATIONAL BUILDING CODE, NEW JERSEY EDITION," AND LOCAL ORDINANCES.

WORK THESE DRAWING IN CONJUNCTION WITH ARCHITECTURAL AND MECHANICAL DRAWINGS.

THE CONTRACTOR SHALL VERIFY ALL EXISTING DIMENSIONS AND CONDITIONS IN THE FIELD BEFORE COMMENCING WORK. ANY DISCREPANCY BETWEEN EXISTING CONDITIONS OR MEASUREMENTS AND THE INFORMATION SHOWN ON THE DRAWINGS SHALL BE BROUGHT TO THE ATTENTION OF THE STRUCTURAL ENGINEER IMMEDIATELY. NO WORK SHALL CONTINUE UNTIL THE DISCREPANCY IS RESOLVED.

THE CONTRACTOR SHALL PROVIDE THE NECESSARY COORDINATION BETWEEN ALL TRADES WITH REGARD TO THE DRAWINGS. LOCATE BOLTS, SLEEVES, AND TRENCHES AS REQUIRED FOR MECHANICAL TRADES, AND PROVIDE AND INSTALL VARIOUS ITEMS NOT SHOWN ON THESE DRAWINGS BUT AS REQUIRED FOR VARIOUS TRADES.

DO NOT SCALE THE STRUCTURAL DRAWINGS. IF DIMENSIONS ARE IN QUESTION, THE CONTRACTOR SHALL OBTAIN CLARIFICATION FROM THE STRUCTURAL ENGINEER.

THE STRUCTURAL INTEGRITY OF THE BUILDING IS DEPENDENT ON COMPLETED CONSTRUCTION IN ACCORDANCE WITH THE PLANS AND SPECIFICATIONS. THE STRUCTURAL ENGINEER ASSUMES NO LIABILITY FOR THE STABILITY OF THE STRUCTURE DURING CONSTRUCTION. THE CONTRACTOR SHALL SUPPLY ANY TEMPORARY BRACING REQUIRED UNTIL BUILDING CONSTRUCTION IS COMPLETE.

DURING CONSTRUCTION THE CONTRACTOR SHALL KEEP LOADS ON THE STRUCTURE WITHIN THE LIMITS OF THE DESIGN LOADS. CONSTRUCTION MATERIAL PLACED ON FRAMED FLOORS AND ROOFS SHALL BE SPREAD OUT AS REQUIRED.

THE CONTRACTOR IS RESPONSIBLE FOR SAFETY WITHIN THE JOB SITE AND FOR MEETING ALL APPLICABLE OSHA REQUIREMENTS DURING CONSTRUCTION.

THE CONTRACTOR IS RESPONSIBLE FOR ANY REQUIRED EXCAVATION SHORING AND THE EVALUATION AND PROTECTION OF ADJACENT STRUCTURES.

FOUNDATIONS AND SLABS ON GRADE

ALL EXCAVATION, SUBGRADE PREPARATION, AND OTHER EARTHWORK SHALL BE PERFORMED IN ACCORDANCE WITH THE GEOTECHNICAL REPORT PREPARED BY KEVIN L. PATTON, P.E. DATED 7/7/2020. 1

ALL FOOTINGS ARE DESIGNED FOR A MINIMUM SOIL BEARING CAPACITY OF 3.5 KIPS PER SQUARE FOOT.

ALL FOOTINGS ARE TO BEAR ON UNDISTURBED VIRGIN SOIL OR CONTROLLED COMPACTED FILL.

THE BOTTOM OF ALL EXTERIOR FOOTINGS SHALL EXTEND 3'-6" MINIMUM BELOW FINISHED GRADE.

ALL EXCAVATIONS SHALL BE FREE OF WATER BEFORE POURING CONCRETE.

HAND TRIM SIDES AND BOTTOM OF EARTH FORMS AND REMOVE LOOSE DIRT.

NO SUBSEQUENT EXCAVATION SHALL BE NEARER THAN 2:1 (HORIZONTAL:VERTICAL) TO AN INSTALLED FOOTING OR FOUNDATION.

CONCRETE FOUNDATION WALLS SHALL BE PLACED IN ALTERNATE SECTIONS, NOT MORE THAN 60 FEET IN LENGTH. HORIZONTAL CONSTRUCTION JOINTS ARE NOT PERMITTED EXCEPT WHERE SHOWN.

PLACE SLABS ON GROUND PER THICKNESS SHOWN ON DRAWINGS WITH TOP OF SLAB SET TO ACCOMMODATE ARCHITECTURAL FINISHES.

PROVIDE SAW CUT CONTROL JOINTS AT AN OPTIMUM TIME AFTER FINISHING. CUT SLABS WITH A 3/16 INCH THICK BLADE TO 1 INCH DEPTH. LOCATE CONTROL JOINTS AT A MAXIMUM SPACING OF 36 TIMES THE SLAB DEPTH AND AT EACH CORNER, COLUMN AND PLAN IRREGULARITY.

THE CONTRACTOR SHALL SUBMIT POUR SEQUENCE AND JOINT LAYOUT TO THE ARCHITECT FOR APPROVAL PRIOR TO POURING CONCRETE SLABS.

SEPARATE SLABS ON GRADE FROM VERTICAL SURFACES WITH JOINT FILLER. EXTEND JOINT FILLER FROM BOTTOM OF SLAB TO WITHIN ¼INCH OF FINISHED SLAB SURFACE.

CONSTRUCT SLAB ON GRADE WITH OVERALL SPECIFIED FF30/FL20 IN ACCORDANCE WITH ACI 302.1. DETERMINATION OF FF/FL NUMBERS WILL BE IN ACCORDANCE WITH ASTM E 1155. THE CONTRACTOR WILL TAKE REMEDIAL MEASURES WHEN FLOOR SLABS DO NOT MEET SPECIFIED REQUIREMENTS.

WHERE COMPACTED FILL IS REQUIRED, WELL GRADED GRANULAR MATERIAL SHALL BE PLACED IN LIFTS NOT EXCEEDING 12 INCHES AND COMPACTED TO 95% OF ITS MAXIMUM DRY DENSITY AS PER ASTM D-1557.

VERIFICATION OF BEARING CAPACITY AND INSPECTION OF COMPACTED FILL SHALL BE COMPLETED BY A QUALIFIED PROFESSIONAL ENGINEER LICENSED IN THE STATE OF NEW JERSEY.

ANY UNEXPECTED SUBGRADE CONDITIONS SHALL BE IMMEDIATELY BROUGHT TO THE ATTENTION OF THE STRUCTURAL ENGINEER AND GEOTECHNICA

CONCRETE

ALL CONCRETE MATERIALS AND CONSTRUCTION PROCEDURES SHALL BE IN ACCORDANCE WITH ACI 318. EVALUATION AND ACCEPTANCE OF CONCRETE STRUCTURES SHALL BE IN ACCORDANCE WITH ACI 301.

SPECIFIED COMPRESSIVE STRENGTH FC AT 28 DAYS:

FOUNDATIONS AND FOOTINGS: 4000 PSI.
WALLS, COLUMNS, ELEVATED SLABS, AND BEAMS: 5000 PSI.
FLOOR SLABS ON GRADE: 3000 PSI
CONCRETE FILL ON METAL DECK: 3000 PSI.
MISCELLANEOUS CURBS AND PADS: 4000 PSI.

SUBMIT PROPOSED MIX DESIGNS AND TEST DATA BEFORE CONCRETE OPERATIONS BEGIN. ESTABLISH THE REQUIRED AVERAGE STRENGTH OF EACH DESIGN MIX ON THE BASIS OF EITHER FIELD EXPERIENCE OR TRIAL MIXTURES AS SPECIFIED IN ACI 301, AND PROPORTION MIXES PER THE RECOMMENDATIONS OF ACI 211.1. EACH MIX SHALL BE IDENTIFIED AS IT WILL APPEAR ON BATCH TICKETS DELIVERED TO PROJECT SITE.

CONCRETE MIX DESIGN SHALL PROVIDE FOR A CONCRETE SLUMP APPROPRIATE FOR PROJECT CONDITIONS. THE CONCRETE SHALL BE SUFFICIENTLY FLUID TO ALLOW FOR EASE OF PLACEMENT AND SUFFICIENTLY STIFF TO PREVENT SEGREGATION.

AGGREGATE SHALL CONFORM TO ASTM C33.

WATER-TO-CEMENT RATIO SHALL NOT EXCEED 0.45 BY WEIGHT. WEIGHT OF WATER SHALL INCLUDE ALL FREE MOISTURE, INCLUDING LIQUID ADMIXTURES.

AIR-ENTRAINING ADMIXTURE SHALL BE ADDED TO ACHIEVE TOTAL AIR CONTENT OF 6 PERCENT FOR EXTERIOR EXPOSED CONCRETE AND 3 PERCENT FOR CONCRETE NOT EXPOSED TO EXTERIOR WITH A TOLERANCE OF 1 PERCENT.

PROVIDE WATER-REDUCING ADMIXTURES CONFORMING TO ASTM C494 AS REQUIRED FOR PLACEMENT AND WORKABILITY AT THE MAXIMUM WATER TO CEMENT RATIO SPECIFIED.

INDICATE TYPE AND QUANTITY OF ADMIXTURES PROPOSED OR REQUIRED. ADMIXTURES CONTAINING MORE THAN 0.1 PERCENT CHLORIDE IONS ARE NOT PERMITTED. WHERE MIX CONTAINS MORE THAN ONE ADMIXTURE, ALL ADMIXTURES SHALL BE SUPPLIED BY ONE MANUFACTURER. MANUFACTURER SHALL CERTIFY THAT ADMIXTURES ARE COMPATIBLE SUCH THAT DESIRABLE EFFECTS OF EACH ADMIXTURE WILL BE REALIZED. LIQUID ADMIXTURES SHALL BE CONSIDERED PART OF THE TOTAL WATER.

WATER SHALL BE CLEAN, POTABLE AND FREE FROM DELETERIOUS MATERIAL.

PROVIDE DATA FOR PROPRIETARY MATERIALS, INCLUDING ADMIXTURES, CURING MATERIALS, AND FINISH MATERIALS.

SUBMIT MATERIAL CERTIFICATIONS FOR CEMENTITIOUS MATERIALS, AGGREGATES AND ADMIXTURES.

PROVIDE DEFORMED REINFORCING BARS COMPLYING WITH ASTM A615, GRADE 60, EXCEPT WHERE OTHERWISE INDICATED. ALL DETAILING OF REINFORCING SHALL BE IN ACCORDANCE WITH ACI STANDARD 315.

WELDED WIRE FABRIC SHALL BE ASTM A1064, COLD-DRAWN STEEL, PLAIN.

SUBMIT BAR PLACEMENT SHOP DRAWINGS SHOWING THE LOCATION OF REINFORCING AND CONSTRUCTION JOINTS. DELIVER REINFORCEMENT TO PROJECT SITE BUNDLED AND TAGGED INDICATING BAR SIZES, LENGTHS, AND OTHER DATA CORRESPONDING TO INFORMATION SHOWN ON PLACEMENT DRAWINGS.

PLACE REINFORCEMENT TO ACHIEVE NOT LESS THAN MINIMUM CONCRETE COVERAGE AS REQUIRED FOR PROTECTION. ACCURATELY POSITION, SUPPORT, AND SECURE REINFORCEMENT TO PREVENT DISPLACEMENT.

CONCRETE PROTECTION FOR REINFORCING STEEL SHALL BE AS FOLLOWS:

ELEVATED SLABS: 3/4"
BEAMS AND COLUMNS (PEDESTALS): 1 1/2"
INSIDE FACE OF WALLS: 1"
CONCRETE POURED ON GROUND: 3"
EXTERIOR FACE OF WALLS (AGAINST EARTH): 2"

FIBROUS REINFORCEMENT FOR SLABS SHALL BE FIBRILLATED POLYPROPYLENE FIBERS ENGINEERED AND DESIGNED FOR USE IN CONCRETE COMPLYING WITH ASTM C 1116 TYPE III, 1/2" TO 1 1/2". UNIFORMLY DISPERSE FIBERS IN THE CONCRETE MIX AT THE MANUFACTURER'S RECOMMENDED RATE BUT NOT LESS THAN 1.5 POUNDS PER CUBIC YARD.

PROVIDE CLASS B TENSION LAP SPLICES COMPLYING WITH ACI 318 UNLESS OTHERWISE INDICATED.

SURVEY ANCHOR BOLTS FOR PLACEMENT AND ALIGNMENT PRIOR TO CASTING CONCRETE.

INSTALLATION TOLERANCES FOR ANCHOR BOLTS FOR STRUCTURAL STEEL COLUMNS SHALL COMPLY WITH THE AISC CODE OF STANDARD PRACTICE FOR STEEL BUILDINGS AND BRIDGES.

GROUT SHALL CONFORM TO ASTM C1107, GRADE B NON-SHRINK, NON-METALLIC, PREPACKAGED GROUT WITH A COMPRESSIVE STRENGTH OF 5000 PSI AT 28 DAYS.

THE CONTRACTOR IS RESPONSIBLE FOR DESIGN, ENGINEERING, AND CONSTRUCTION OF FORMWORK, CAPABLE OF SUPPORTING ALL APPLIED LOADS UNTIL THE CONCRETE IS ADEQUATELY CURED, WITHIN ALLOWABLE TOLERANCES AND DEFLECTION LIMITS.

LOCATE AND INSTALL CONSTRUCTION JOINTS AS INDICATED ON DRAWINGS. IF CONSTRUCTION JOINTS ARE NOT INDICATED, LOCATE IN A MANNER WHICH WILL NOT IMPAIR STRENGTH AND WILL HAVE LEAST IMPACT ON APPEARANCE.

PROVIDE WATERSTOPS AT CONSTRUCTION JOINTS AND AS OTHERWISE INDICATED, SIZED AND CONFIGURED TO SUIT JOINTS. INSTALL TO FORM CONTINUOUS, WATERTIGHT DAM, WITH FIELD JOINTS FABRICATED IN STRICT ACCORDANCE WITH MANUFACTURER'S INSTRUCTIONS.

CONSTRUCT EXPANSION JOINTS WHERE INDICATED. EXPANSION JOINT FILLER SHALL BE NONEXTRUDING BITUMINOUS TYPE PER ASTM D1751 INSTALL TO FULL DEPTH OF CONCRETE RECESSED TO ACCOMMODATE JOINT SEALANT AND BACKER ROD WHERE NECESSARY.

PREPARE PREVIOUSLY PLACED CONCRETE BY CLEANING AND APPLYING BONDING AGENT IN ACCORDANCE WITH MANUFACTURER'S INSTRUCTION.

IN LOCATIONS WHERE NEW CONCRETE IS DOWELED TO EXISTING WORK, DRILL HOLES IN EXISTING CONCRETE, INSERT STEEL DOWELS AND PACK SOLID WITH EPOXY GROUT.

FOUNDATION SURFACES AGAINST WHICH CONCRETE IS TO BE PLACED MUST BE FREE FROM STANDING WATER, MUD AND DEBRIS. SURFACES SHALL BE CLEAN AND FREE FROM OIL, OBJECTIONABLE COATINGS, AND LOOSE OR UNSOUND MATERIAL.

ALL EXPOSED EDGES OF CONCRETE SHALL HAVE A 3/4" X 3/4" CHAMFER, UNLESS SPECIFICALLY INDICATED OTHERWISE ON THE DRAWINGS.

CONSOLIDATE CONCRETE BY MEANS OF MECHANICAL VIBRATORS TO ACHIEVE CONSISTENT CONSOLIDATION WITHOUT SEGREGATION OF COARSE AGGREGATES.

REPAIR SURFACE DEFECTS, INCLUDING TIE HOLES, IMMEDIATELY AFTER REMOVING FORMWORK.

PROTECT CONCRETE FROM SUN AND RAIN. DO NOT PERMIT CONCRETE TO BECOME DRY DURING CURING PERIOD. CONCRETE SHALL NOT BE SUBJECTED TO ANY LOADS UNTIL CONCRETE IS COMPLETELY CURED, AND UNTIL CONCRETE HAS ATTAINED ITS 28 DAY STRENGTH AND 14 DAYS MINIMUM.

UPON COMPLETION OF FINISHING OPERATION, THE SURFACE OF SLABS SHALL BE SEALED AGAINST MOISTURE LOSS FOR 7 DAYS BY THE APPLICATION OF A CURING MEMBRANE OR BLANKET.

CONCRETE IN FORMS SHALL BE KEPT MOIST UNTIL REMOVAL. IMMEDIATELY UPON REMOVAL OF FORMS, AN APPROVED SPRAYED-ON CURING COMPOUND SHALL BE APPLIED TO THE CONCRETE SURFACES IN STRICT COMPLIANCE WITH THE MANUFACTURER'S RECOMMENDATIONS. CURING SHALL BE MAINTAINED FOR 7 DAYS.

FORMED SURFACES SHALL COMPLY WITH MINIMUM TOLERANCES ESTABLISHED IN ACI 117, UNLESS MORE STRINGENT REQUIREMENTS ARE INDICATED ON THE DRAWINGS.

FINISH EXPOSED CONCRETE TO OFFER SMOOTH, STAIN-FREE FINAL APPEARANCE AND MINIMUM NUMBER OF JOINTS. PROVIDE FORMING MATERIALS WITH SUFFICIENT STRENGTH TO RESIST HYDROSTATIC HEAD WITHOUT BOW OR DEFLECTION IN EXCESS OF ALLOWABLE TOLERANCES.

CONSTRUCT SHORED ELEVATED FLOOR SLABS WITH OVERALL SPECIFIED FF30/FL20 AND WITH MINIMUM FF15/FL10 FOR INDIVIDUAL FLOOR SECTIONS IN ACCORDANCE WITH ACI 302.1. DETERMINATION OF FF/FL NUMBERS WILL BE IN ACCORDANCE WITH ASTM E 1155. THE CONTRACTOR WILL TAKE REMEDIAL MEASURES WHEN FLOOR SLABS DO NOT MEET SPECIFIED REQUIREMENTS.

PROVIDE CONCRETE FILL FOR STEEL PAN STAIR TREADS, LANDINGS, AND ASSOCIATED ITEMS. SCREED, TAMP, AND FINISH CONCRETE SURFACES AS SCHEDULED.

COMPLY FULLY WITH RECOMMENDATIONS OF ACI 306 WHEN AIR TEMPERATURES ARE EXPECTED TO DROP BELOW 40°F EITHER DURING CONCRETE PLACEMENT OPERATIONS OR BEFORE CONCRETE HAS CURED. PROTECTIVE MEASURES INCLUDE BUT ARE NOT LIMITED TO HEATING OF MATERIALS, HEATED ENCLOSURES, AND INSULATING BLANKETS.

COMPLY FULLY WITH RECOMMENDATIONS OF ACI 305 WHEN AMBIENT TEMPERATURE BEFORE, DURING, OR AFTER CONCRETE PLACEMENT IS EXPECTED TO EXCEED 90°F OR WHEN COMBINATIONS OF HIGH AIR TEMPERATURE, LOW RELATIVE HUMIDITY, AND WIND SPEED ARE SUCH THAT THE RATE OF EVAPORATION FROM FRESHLY POURED CONCRETE WOULD OTHERWISE EXCEED 0.2 POUNDS PER SQUARE FOOT PER HOUR. PROTECTIVE MEASURES INCLUDE BUT ARE NOT LIMITED TO COOLING OF MATERIALS BEFORE OR DURING MIXING, PLACEMENT DURING EVENING TO DAWN HOURS, FOGGING DURING FINISHING AND CURING, SHADING, AND WINDBREAKS

SAMPLE CONCRETE AND MAKE SPECIMENS FOR TESTING PER ASTM C172 AND ASTM C31. TAKE SAMPLES AT POINT OF DISCHARGE AND REPORT RESULTS OF ALL TESTS.

TEST SLUMP OF THE FIRST 2 LOADS OF CONCRETE DELIVERED FOR EACH POUR AND ONCE PER STRENGTH TEST PERFORMED PER ASTM C143 WITH ADDITIONAL TESTS IF CONCRETE CONSISTENCY CHANGES.

TEST AIR CONTENT OF THE FIRST 2 LOADS OF CONCRETE DELIVERED FOR EACH POUR AND ONCE FOR EACH STRENGTH TEST PERFORMED PER ASTM C173 OR ASTM C231.

TEST CONCRETE TEMPERATURE FOR EACH STRENGTH TEST PERFORMED AND HOURLY WHEN AIR TEMPERATURE IS BELOW 40°F OR ABOVE 90°F.

PROVIDE ONE COMPRESSIVE STRENGTH TEST PER ASTM C39 FOR EVERY 50 CUBIC YARDS OR FRACTION THEREOF FOR EACH DAY'S POUR OF EACH CONCRETE CLASS.

MOLD AND CURE ONE SET OF 4 STANDARD CYLINDERS FOR EACH COMPRESSIVE STRENGTH TEST REQUIRED. TEST ONE SPECIMEN PER SET AT 7 DAYS FOR INFORMATION AND TEST 2 SPECIMENS PER SET FOR ACCEPTANCE OF STRENGTH POTENTIAL AT 28 DAYS. RETAIN ONE SPECIMEN FROM EACH SET FOR LATER TESTING, IF REQUIRED.

EVALUATE CONSTRUCTION AND CURING PROCEDURES AND IMPLEMENT CORRECTIVE ACTION WHEN STRENGTH RESULTS FOR FIELD-CURED SPECIMENS ARE LESS THAN 85 PERCENT OF TEST VALUES FOR COMPANION LABORATORY-CURED SPECIMENS.

COST OF ADDITIONAL TESTING SHALL BE THE RESPONSIBILITY OF THE CONTRACTOR WHEN UNACCEPTABLE CONCRETE HAS BEEN VERIFIED.

STRUCTURAL STEEL

ALL STEEL SHALL BE DETAILED, FABRICATED AND ERECTED IN ACCORDANCE WITH THE REQUIREMENTS OF AISC "SPECIFICATION FOR STRUCTURAL STEEL BUILDINGS," LATEST EDITION.

ALL WELDERS SHALL BE QUALIFIED IN ACCORDANCE WITH AWS D1.1 "STRUCTURAL WELDING CODE - STEEL" FOR EACH PROCESS, POSITION AND JOINT CONFIGURATION.

STRUCTURAL STEEL WIDE FLANGE MEMBERS SHALL CONFORM WITH ASTM A992.

STEEL PLATE, BARS AND CHANNELS SHALL CONFORM WITH ASTM A36 UNLESS OTHERWISE NOTED.

STRUCTURAL STEEL TUBING SHALL CONFORM WITH ASTM A500, GRADE B

STRUCTURAL STEEL PIPE SHALL CONFORM WITH ASTM A53, GRADE B.

BOLTS FOR STRUCTURAL STEEL CONNECTIONS SHALL BE MINIMUM 3/4" DIAMETER ASTM A325-N UNLESS DESIGNATED AS A490 ON THE DRAWINGS. NUTS SHALL BE ASTM A563 GRADE C OR DH. TENSION CONTROL BOLTS SHALL BE ASTM F1852 OR ASTM F2280.

WASHERS SHALL BE FLAT CONFORMING TO ASTM F436 TYPE 1. THE FINISH OF WASHERS IS TO MATCH THE NUT. A325 BOLTS SHALL HAVE WASHERS UNDER THE HEAD AND A490 BOLTS SHALL HAVE HARDENED WASHERS UNDER THE HEAD AND THE NUT.

ANCHOR BOLTS SHALL BE ASTM F1554 55 KSI YIELD STRENGTH, UNLESS OTHERWISE NOTED.

SHEAR STUD CONNECTORS CONFORMING TO ASTM A108 ARE TO BE FIELD INSTALLED. AFTER WELDING, STUDS ARE TO BE THE LENGTH SHOWN ON THE DRAWINGS. SHOP WELDING OF STUDS IS NOT PERMITTED.

ALL WELDS SHALL UTILIZE E70XX ELECTRODES AND SHALL BE A MINIMUM OF 3/16 INCH IN SIZE UNLESS NOTED OTHERWISE.

CONNECTIONS SHALL BE BOLTED OR WELDED WITH A MINIMUM OF TWO BOLTS OR EQUIVALENT WELD.

UNLESS CONNECTIONS ARE DETAILED ON THE DRAWINGS, THE CONTRACTOR IS RESPONSIBLE FOR THE DESIGN OF CONNECTIONS. CONNECTION DESIGN SHALL BE UNDER THE DIRECT SUPERVISION OF AN ENGINEER EXPERIENCED IN CONNECTION DESIGN.

BEAM CONNECTIONS SHALL BE IN ACCORDANCE WITH THE AISC MANUAL OF STEEL CONSTRUCTION. STANDARD WEB CONNECTIONS SHALL BE PROVIDED WHERE POSSIBLE.

NON-COMPOSITE BEAM CONNECTIONS ARE TO BE DESIGNED TO RESIST ONE HALF THE ALLOWABLE LOAD FOR THE APPROPRIATE SPAN GIVEN IN THE MAXIMUM TOTAL UNIFORM LOAD TABLE OF THE AISC MANUAL OF STEEL CONSTRUCTION.

COMPOSITE BEAM CONNECTIONS ARE TO BE DESIGNED TO RESIST THREE QUARTERS OF THE ALLOWABLE LOAD FOR THE APPROPRIATE SPAN GIVEN IN THE MAXIMUM TOTAL UNIFORM LOAD TABLE OF THE AISC MANUAL OF STEEL CONSTRUCTION.

THE CONTRACTOR IS RESPONSIBLE FOR THE ADEQUACY OF ANY CONNECTIONS DESIGNED BY THE CONTRACTOR. APPROVAL OF SHOP DRAWINGS DOES NOT RELIEVE THE CONTRACTOR OF THIS RESPONSIBILITY

SHOP DRAWINGS FOR STRUCTURAL STEEL SHALL BE SUBMITTED FOR REVIEW PRIOR TO FABRICATION OR ORDERING OF STEEL.

SHOP DRAWINGS SHALL INCLUDE ERECTION PLANS AND PIECE DETAILS INDICATING SIZE, SPACING, LOCATION AND ATTACHMENT OF STRUCTURAL MEMBERS INCLUDING SIZE AND SPACING OF BOLTS AND WELDS. SUBMITTAL MUST ALSO INCLUDE A THREE DIMENSIONAL RENDERING OF THE STEEL FRAMING.

THE CONTRACTOR SHALL SURVEY, REVIEW AND CONFIRM EXISTING CONDITIONS PRIOR TO DEVELOPING SHOP DRAWINGS.

NO PORTION OF THE CONTRACT DRAWINGS SHALL BE REPRODUCED FOR USE AS SHOP DRAWINGS.

SHOP PRIME ALL STRUCTURAL STEEL MEMBERS WITH FAST-CURING, LEAD AND CHROMATE-FREE, VOC-COMPLIANT, UNIVERSAL MODIFIED-ALKYD PRIMER WITH GOOD RESISTANCE TO NORMAL ATMOSPHERIC CORROSION, COMPLYING WITH PERFORMANCE REQUIREMENTS OF FS TT-P-664, OR EQUIVALENT.

DO NOT PRIME SURFACES THAT WILL BE FIREPROOFED, IN CONTACT WITH CONCRETE, WITHIN 3 INCHES OF FIELD WELDS, OR ON THE FAYING SURFACE OF HIGH STRENGTH BOLTED FRICTION CONNECTIONS.

GALVANIZE STRUCTURAL STEEL MEMBERS AS INDICATED ON THE DRAWINGS IN ACCORDANCE WITH ASTM A123 AND A385 AFTER FABRICATION. PREPARE GALVANIZED SURFACES TO BE PAINTED IN ACCORDANCE WITH ASTM D2092 AND SHOP COAT WITH A COMPATIBLE PRIMER. REPAIR DAMAGED GALVANIZING IN ACCORDANCE WITH ASTM A780.

FURNISH AND INSTALL TEMPORARY SUPPORTS AND INTERNAL BRACES NECESSARY TO SUPPORT STRUCTURAL STEEL DURING ERECTION. TEMPORARY SUPPORTS AND BRACES SHALL BE ADEQUATE FOR ANTICIPATED WIND, SEISMIC, EQUIPMENT AND ERECTION LOADS. REMOVE TEMPORARY SHORING AFTER THE STEEL ERECTION IS COMPLETE.

THE OWNER WILL ENGAGE A QUALIFIED INDEPENDENT TESTING AND INSPECTING AGENCY TO PERFORM FIELD TESTS AND INSPECTIONS AND PREPARE TEST REPORTS.

FIELD WELDING AND HIGH STRENGTH BOLTS WILL BE SUBJECT TO INSPECTION.

THE CONTRACTOR WILL REMOVE AND REPLACE WORK THAT DOES NOT COMPLY WITH SPECIFIED REQUIREMENTS AND BE RESPONSIBLE FOR THE COST OF ADDITIONAL INSPECTING TO DETERMINE COMPLIANCE OF CORRECTED WORK WITH SPECIFIED REQUIREMENTS.

SPECIAL INSPECTIONS

SPECIAL INSPECTIONS SHALL BE IN ACCORDANCE WITH THE REQUIREMENTS OF SECTION 1704 OF "2020 BUILDING CODE OF NEW YORK STATE."

THE OWNER SHALL EMPLOY A SPECIAL INSPECTION AGENCY TO PERFORM INSPECTIONS AND TESTING DURING CONSTRUCTION. 1

SPECIAL INSPECTIONS AND ASSOCIATED TESTING SHALL BE PERFORMED BY AN APPROVED INDEPENDENT AGENCY MEETING THE REQUIREMENTS OF ASTM E329 - MATERIALS, ASTM D3740 - SOILS, ASTM C1077 - CONCRETE, ASTM A880 - STEEL, AND ASTM E543 - NON-DESTRUCTIVE TESTING.

THE SPECIAL INSPECTOR SHALL BE A QUALIFIED PERSON WHO SHALL DEMONSTRATE COMPETENCE, TO THE SATISFACTION OF THE BUILDING CODE OFFICIAL, FOR INSPECTION OF THE PARTICULAR TYPE OF CONSTRUCTION REQUIRING SPECIAL INSPECTION.

THE SPECIAL INSPECTOR SHALL OBSERVE CONSTRUCTION PROGRESS FOR COMPLIANCE WITH THE APPROVED CONSTRUCTION DOCUMENTS. ALL DISCREPANCIES SHALL BE BROUGHT TO THE ATTENTION OF THE CONTRACTOR FOR CORRECTION. IF NOT CORRECTED DISCREPANCIES SHALL BE BROUGHT TO THE ATTENTION OF THE STRUCTURAL ENGINEER AND BUILDING OFFICIAL.

THE SPECIAL INSPECTOR SHALL FURNISH INSPECTION REPORTS FOR EACH INSPECTION TO THE BUILDING OFFICIAL, STRUCTURAL ENGINEER, CONTRACTOR, AND OWNER.

THE SPECIAL INSPECTION AGENCY SHALL SUBMIT A FINAL REPORT INDICATING THAT THE WORK REQUIRING SPECIAL INSPECTION WAS INSPECTED AND IS IN CONFORMANCE WITH THE APPROVED CONSTRUCTION DOCUMENTS.

INSPECTIONS SHALL BE CONDUCTED FOR THE MATERIALS AND OPERATIONS LISTED PER THE FOLLOWING STATEMENT OF SPECIAL INSPECTIONS:

GEOTECHNICAL INSPECTIONS:

BEARING CAPACITY BELOW SHALLOW FOUNDATIONS
DEPTH OF FOOTING
CLASSIFICATION AND TESTING OF FILL MATERIALS
MATERIAL, DENSITY AND LIFT THICKNESS OF COMPACTED FILL

CONCRETE INSPECTIONS:

PLACEMENT OF REINFORCING STEEL
ANCHOR BOLT LOCATION
VERIFY USE OF REQUIRED MIX DESIGN
SAMPLE CONCRETE FOR STRENGTH TESTS
MEASURE AIR CONTENT, TEMPERATURE, AND SLUMP
FORMWORK FOR SIZE, SHAPE AND LOCATION

STEEL INSPECTIONS:

BOLT QUANTITY AND TENSIONING
WELD SIZE AND TYPE
MEMBER LOCATIONS AND JOINT DETAILS

Micucci Engineering, P.C.
Consulting Structural Engineers
265 South Little Tor Road, Suite 207
New City, New York 10956
Phone: (845) 623-9100
Job No.: 19116 Dwg. 4 of 5

STATE OF NEW YORK · MARK STEVEN MICUCCI

Mark S. Micucci, P.E.
N.Y. License No. 083504

Date	01/27/20
Checked	MSM
Drawn	CP

MICHAEL J. McGOVERN, R.A.
Title REGISTERED ARCHITECT License No. 022257-1

Revisions:

1 7/17/2020
ADDED SOILS REPORT, BEARING CAPACITY & INSPECTIONS INFO

UNAUTHORIZED ALTERATIONS OR ADDITIONS TO THIS DOCUMENT IS A VIOLATION OF SECTION 7209 OF THE NEW YORK STATE EDUCATION LAW. THESE DOCUMENTS REMAIN THE EXCLUSIVE PROPERTY OF THE ENGINEER, AND MAY NOT BE USED FOR ANY PURPOSE WHATSOEVER WITHOUT THE WRITTEN CONSENT OF THE ENGINEER.

LAN ASSOCIATES L.L.P.
engineering • planning • architecture • surveying
252 MAIN STREET, GOSHEN, NEW YORK 10924 (845)615-0350

GENERAL NOTES
EXPANSION OF UPSTATE GLASS
135 Crotty Road
Town of Wallkill, New York

Job No. 4.1196.06
File No. 19116 S6.01

S6.01

CONNECTION SCHEDULE			
BEAM SIZE	BOLT ROWS	WELD SIZE	PLATE THICKNESS
W8, W10	2	¼"	⅜"
W12, W14	3	¼"	⅜"
W16	4	¼"	⅜"
W18	5	¼"	⅜"
W21	6	¼"	⅜"
W24, W27	7	¼"	⅜"
W30	8	¼"	⅜"

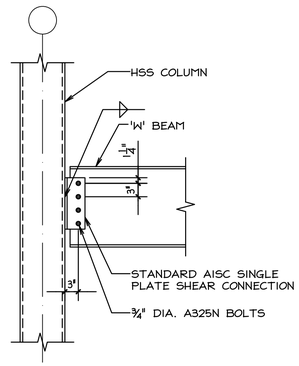

TYPICAL BEAM TO HSS COLUMN CONNECTION
NOT TO SCALE

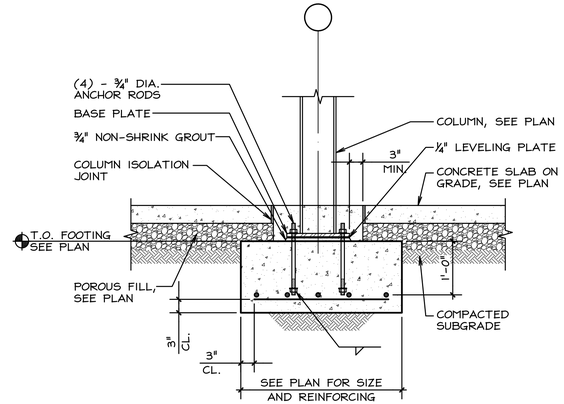

TYPICAL INTERIOR COLUMN FOOTING
NOT TO SCALE

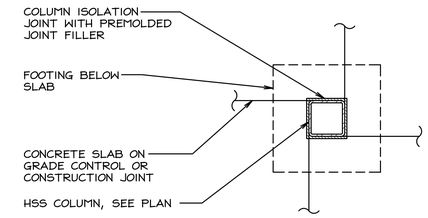

TYPICAL COLUMN ISOLATION JOINT
NOT TO SCALE

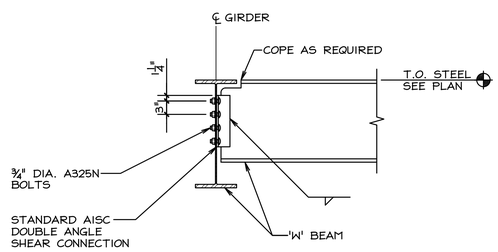

CONNECTION SCHEDULE			
BEAM SIZE	BOLT ROWS	WELD SIZE	ANGLE THICKNESS
W8, W10	2	3/16"	¼"
W12, W14	3	3/16"	¼"
W16	4	3/16"	¼"
W18	5	3/16"	¼"
W21	6	¼"	5/16"
W24, W27	7	¼"	5/16"
W30	8	¼"	5/16"

TYPICAL BEAM TO BEAM CONNECTION
NOT TO SCALE

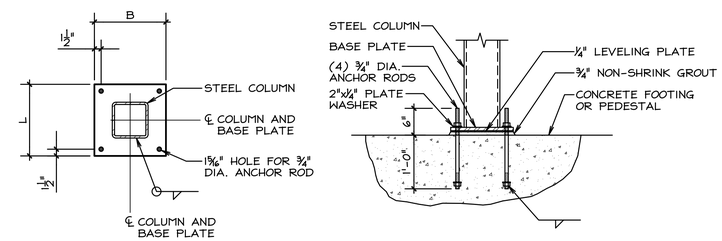

TYPICAL PLAN ELEVATION

TYPICAL HSS COLUMN BASE DETAIL
NOT TO SCALE

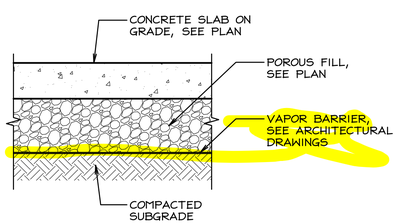

TYPICAL SLAB ON GRADE
NOT TO SCALE

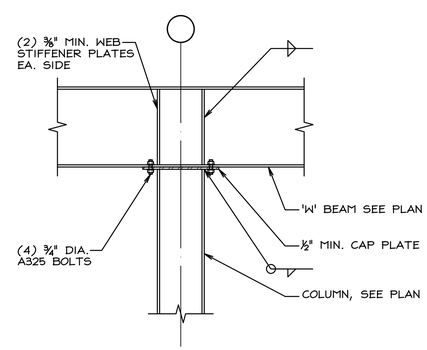

TYPICAL BEAM CONTINUOUS OVER COLUMN
NOT TO SCALE

Micucci Engineering, P.C.
Consulting Structural Engineers
265 South Little Tor Road, Suite 207
New City, New York 10956
Phone: (845) 634-9010
Job No.: 19116 Dwg. 5 of 5
STATE OF NEW YORK · MARK STEVEN MICUCCI · No. 083504 · LICENSED PROFESSIONAL ENGINEER
N.Y. Lic. No. 083504

Date	01/27/20
Checked	MSM
Drawn	CP

MICHAEL J. McGOVERN, R.A.
Title REGISTERED ARCHITECT License No. 022257-1

Revisions:

UNAUTHORIZED ALTERATIONS OR ADDITIONS TO THIS DOCUMENT IS A VIOLATION OF SECTION 7209 OF THE NEW YORK STATE EDUCATION LAW. THESE DOCUMENTS REMAIN THE EXCLUSIVE PROPERTY OF THE ENGINEER, AND MAY NOT BE USED FOR ANY PURPOSE WHATSOEVER WITHOUT THE WRITTEN CONSENT OF THE ENGINEER.

LAN ASSOCIATES
engineering • planning • architecture • surveying
252 MAIN STREET, GOSHEN, NEW YORK 10924 (845)615-0350

TYPICAL DETAILS
EXPANSION OF UPSTATE GLASS
135 Crotty Road
Town of Wallkill, New York

Job No. 4.1196.06
File No. 19116 S6.01

S6.02

Appendix A Site Management Plan – April 2004/Declaration of Restrictive Covenant through May 18, 2006

tesa tape Inc.
Middletown, New York

Site Management Plan
tesa tape Middletown Facility
NYSDEC Site # 336056

April 2004

LAWLER, MATUSKY & SKELLY ENGINEERS LLP
Environmental Science & Engineering Consultants
One Blue Hill Plaza
Pearl River, New York 10965

File No. 442-340

tesa tape Inc.
Middletown, Orange County, NY
NYSDEC Site #336056

SITE MANAGEMENT PLAN

TABLE OF CONTENTS

			Page No.
LIST OF FIGURES			ii
1	INTRODUCTION		
	1.1	Purpose and Objectives	1-1
	1.2	Site Location and Description	1-1
	1.3	Site Subsurface Conditions	1-2
	1.4	Management Plan Organization	1-3
2	EXISTING SITE CONDITIONS		
	2.1	Introduction	2-1
	2.2	Existing Remedial Measures	2-1
	2.3	Established Remedial Action Objectives	2-2
	2.4	Areas Exhibiting Soil Impacts	2-2
		2.4.1 Loading Dock Area	2-2
		2.4.2 Solvent Storage Building	2-3
		2.4.3 Solvent Handling Area	2-3
		2.4.4 Coating Head Room	2-3
	2.5	Areas Exhibiting Groundwater Impacts	2-4
	2.6	Summary of Exposure Pathway Analysis	2-4
3	MONITORING GUIDANCE FOR INTRUSIVE ACTIVITIES		
	3.1	Site Specific Health & Safety Plan	3-1
	3.2	Monitoring Procedures	3-1
4	SOIL HANDLING, ANALYSIS & DISPOSAL GUIDANCE		
	4.1	Soil Handling	4-1
	4.2	Soil Analysis	4-1
	4.3	Soil Disposal	4-2

LIST OF FIGURES

Figure No.	Title	Following Page
1	Site Location	1-1
2	Site Plan Showing Areas of Concern	1-1
3	Location of Remedial System #1 and #2	1-2
4	Monitoring Well Locations	1-2

CHAPTER 1

INTRODUCTION

1.1 PURPOSE AND OBJECTIVES

The purpose of this plan is to provide general guidance and procedures for intrusive activities at the former tesa tape inc (tesa) Middletown facility. The site was formerly used to manufacture various tape products for retail sale and production at the site was discontinued in January 2004. This facility is currently in a routine operations/maintenance and monitoring (OM&M) phase for a remedial action that was initiated to address past accidental releases of toluene at the site. The guidance and procedures for intrusive activities found in this plan are intended to:

- Limit potential exposure to on-site workers.
- Prevent any unnecessary interruptions in the remedial activities.
- Insure proper handling and disposal of surplus soils that might be generated during intrusive activities at the site.

This plan was developed at the request of the New York State Department of Environmental Conservation (NYSDEC) and will be modified as appropriate based on any future redevelopment that may occur at the site. Tesa has retained ownership of the land and buildings at the site and are currently evaluating potential options for future use of the site.

1.2 SITE LOCATION AND DESCRIPTION

The former tesa Middletown facility is located at 135 Crotty Road, in the Town of Wallkill, Orange County, New York (Figure 1). The site occupies a rectangular piece of property measuring approximately 1900 ft by 750 ft (Figure 2). The site is bounded on the north by Interstate Route 84, on the south by Crotty Road and a cement manufacturer and on the east and west by residential areas. The site consists of a large single floor central building, a smaller manufacturing building, and several warehouse type structures and outbuildings. A majority of the western portion of the site is either paved or covered by the existing buildings.

The former manufacturing processes at the Middletown site consisted of saturating, coating, and converting pressure sensitive tapes. As part of this manufacturing process large volumes of toluene were used at the site beginning in 1985. Tape production at the site was discontinued in January 2004 when tesa sold its retail customer base to another tape manufacturer. As part of this transaction, tesa retained ownership of the site. Although it is unlikely that tape manufacturing will resume, the site will be redeveloped for some other commercial or industrial use.

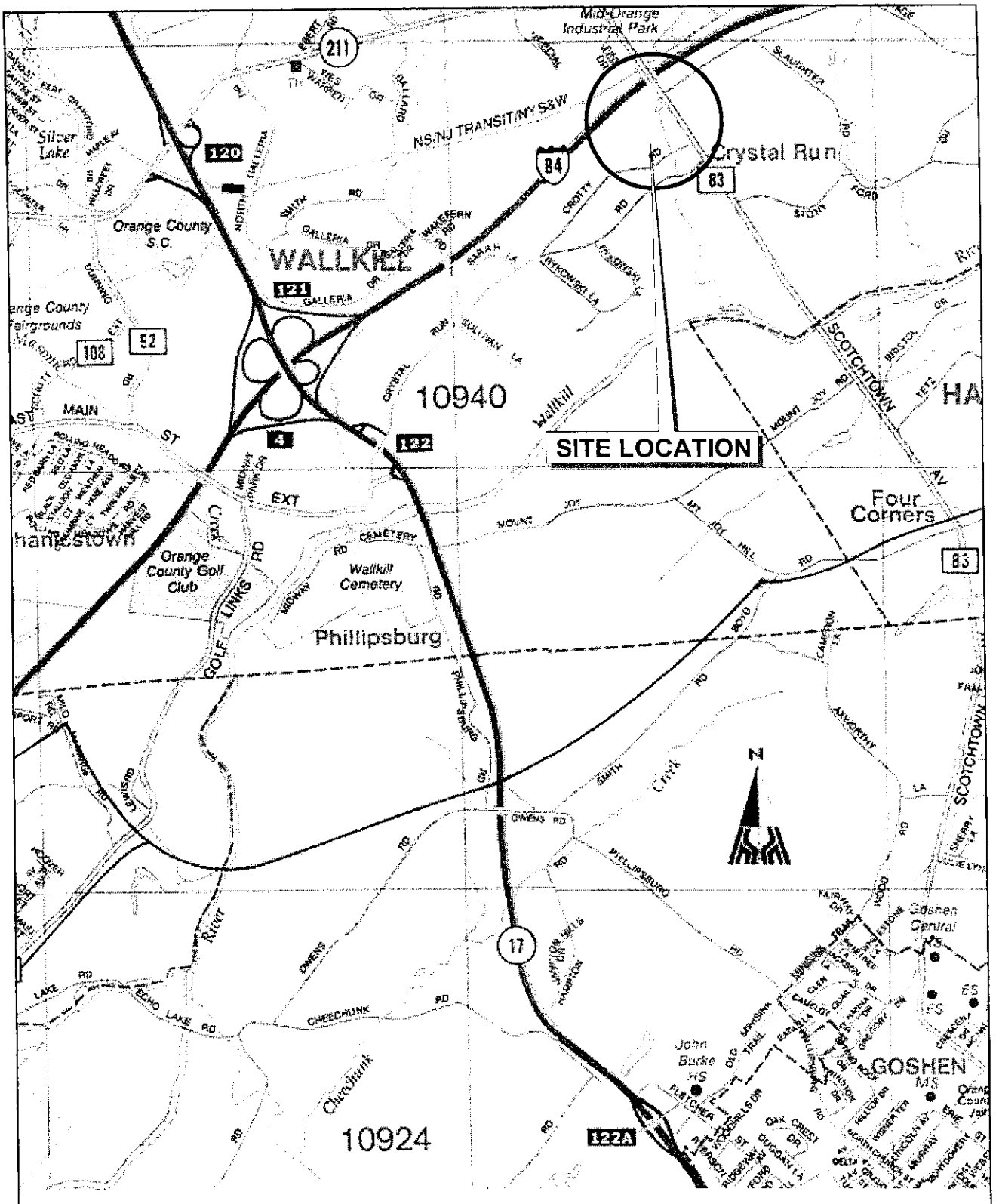

Map source:
Hagstrom Map of Rockland/Ornage/Ulster Counties, 2000.

04xx-\0442_WOH\0442-330 tti - IRM/graphics/DTP/ProgressLetterGraphicsAug02/FiguresTTIremedialinstallation.dsf

LMS Lawler, Matusky & Skelly Engineers LLP One Blue Hill Plaza • Pearl River, New York 10965 ENVIRONMENTAL SCIENCE & ENGINEERING CONSULTANTS	**Site Location** **tesa tape inc. • Middletown, New York**	**Figure 1**

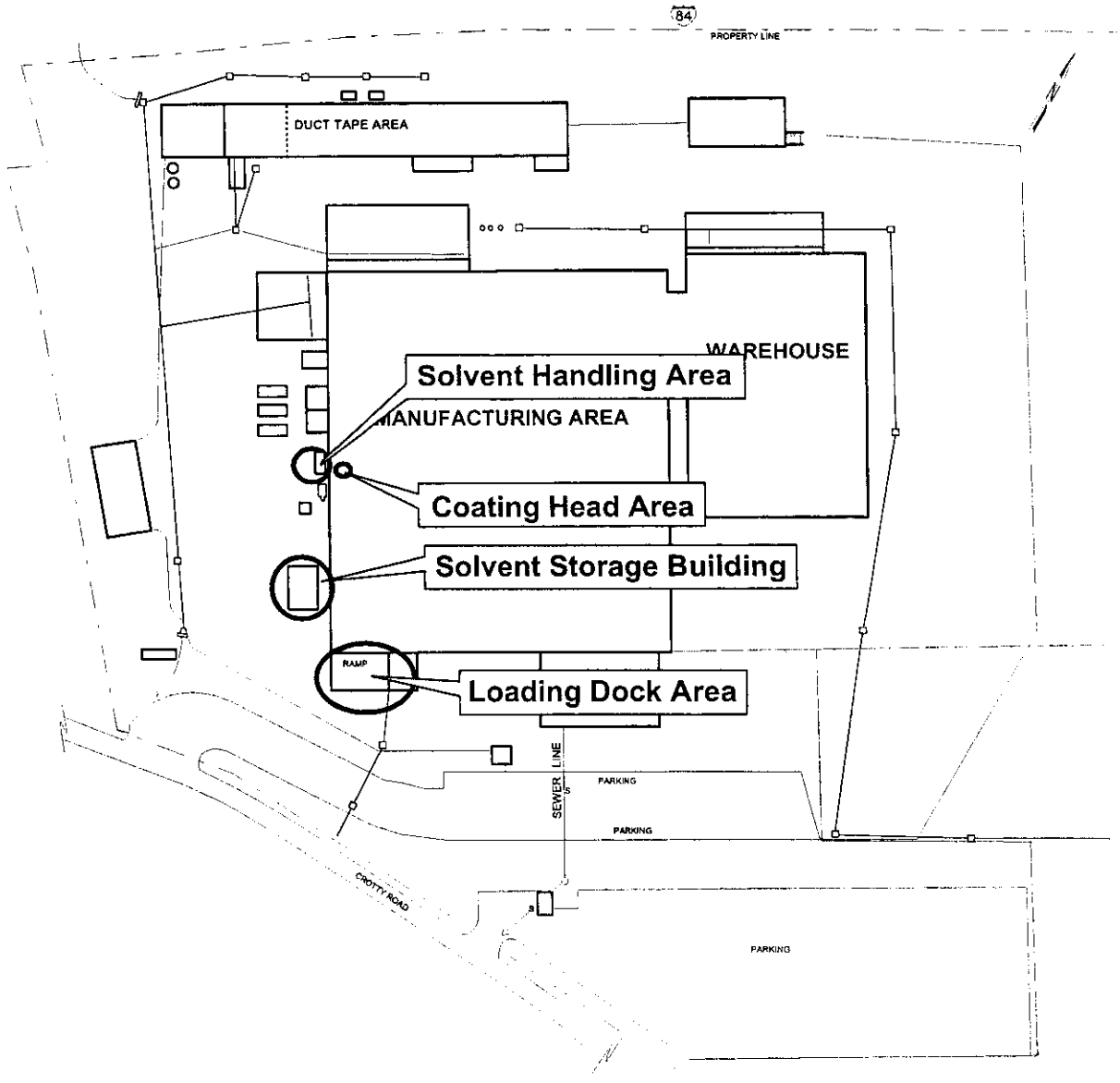

NO SCALE

442232_WHITE...\0442-340_REM...\Graphics\DTP\DECRequestedFigures\DEC Requested Figures.dsf

LMS Lawler, Matusky & Skelly Engineers LLP One Blue Hill Plaza • Pearl River, New York 10965 ENVIRONMENTAL SCIENCE & ENGINEERING CONSULTANTS	**Site Plan Showing Areas of Concern** **tesa tape Inc. • Middletown, New York**	**Figure 2**

Potential impacts to the soils and groundwater at the site were first recognized in 1996 during modification to equipment on the western side of the facility when an on-site excavation discovered toluene stained soils. Subsequently, a detailed site investigation was conducted and a total of seven areas of concern (AOCs) were identified at the site. As appropriate interim remedial measures (IRMs) were conducted at the site that served to mitigate all of the known impacts to the soil and groundwater. The final remedial investigation (RI) report for the site (LMS 2003) fully describes the existing site conditions essentially up to the time that production was suspended at the facility. In February 2004 NYSDEC issued the proposed remedial action plan (PRAP) which proposed No Further Action at the site beyond continued operation of the existing IRMs and continued groundwater monitoring. In March 2004 NYSDEC issued a Record of Decision (ROD) that selected No Further Action as described above.

On-going remedial activities at the site include two active air sparging/soil vapor extraction (AS/SVE) systems that remove toluene from the impacted soils and groundwater at the site. The basic system components include a network of subsurface piping that serves to inject and recover subsurface vapors, a series of air injection wells, and two remedial system trailers that house the necessary mechanical equipment (Figure 3). In addition to the AS/SVE system components a series of 13 monitoring wells are found at the site (Figure 4) that are used in the quarterly groundwater monitoring program.

1.3 SITE SUBSURFACE CONDITIONS

Borings advanced on-site have revealed that the fill material underlying the site typically consists of brown to orange-brown fine to medium grained sand, with some silt and occasional clay. The clay lenses present in the fill material periodically cause a localized perched water conditions during early spring or other times following heavy precipitation. The fill material on-site may actually be native glacial deposits that were reworked during site construction and are no longer in their original depositional position.

Bedrock on-site has been encountered at depths ranging from 8 ft to 14 ft below grade. Bedrock consists of brown to grey shale. Although cores have not been retrieved, samples examined from borings indicate bedrock to be the Mount Merino Shale member of the Normanskill Shale Formation. Typically, weathered pieces of the shale were noted in the samples retrieved from test borings before competent bedrock was encountered.

Groundwater is found both as perched and under unconfined conditions ranging from 5.5 ft to 10.0 ft below grade. Perched conditions occur where shallow clay lenses are present that prevent downward percolation.

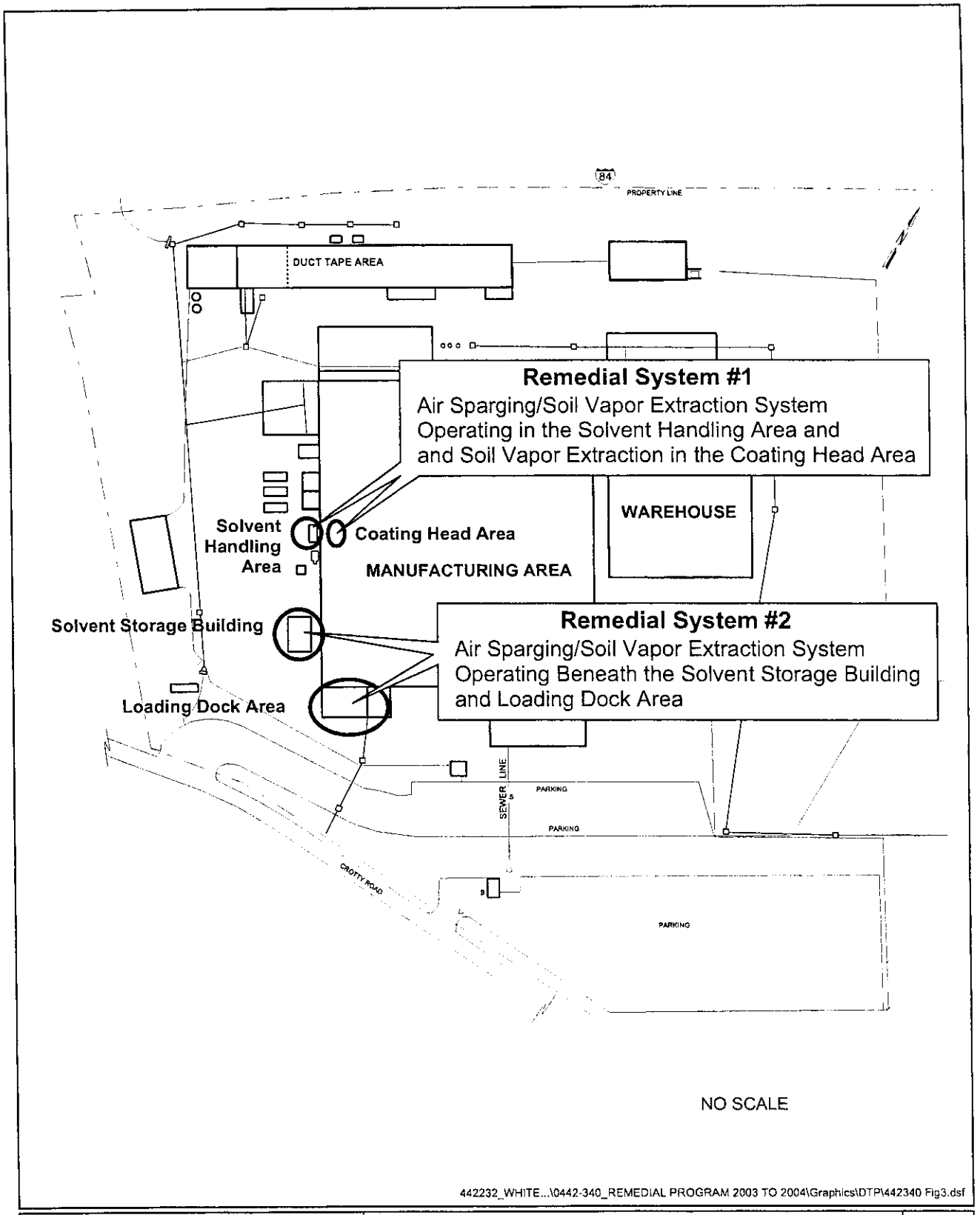

442232_WHITE...\0442-340_REMEDIAL PROGRAM 2003 TO 2004\Graphics\DTP\442340 Fig3.dsf

LMS Lawler, Matusky & Skelly Engineers LLP One Blue Hill Plaza • Pearl River, New York 10965 ENVIRONMENTAL SCIENCE & ENGINEERING CONSULTANTS	**Location of Remedial System #1 and #2** **tesa tape Inc. • Middletown, New York**	**Figure 3**

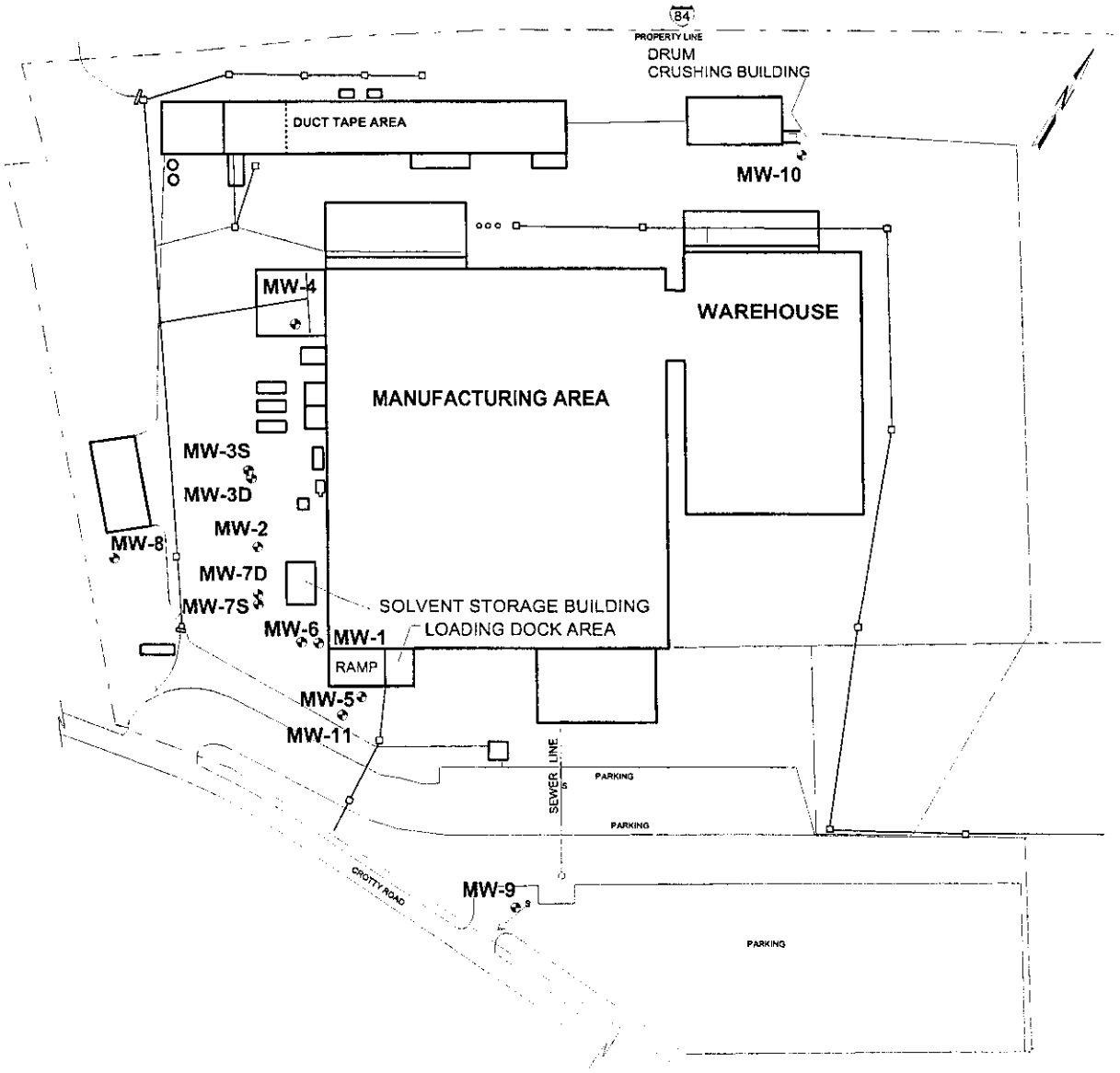

Legend

- Monitoring well

NO SCALE

442232_WHITE...\0442-340_REMEDIAL PROGRAM 2003 TO 2004\Graphics\DTP\442340 Fig4.dsf

LMS Lawler, Matusky & Skelly Engineers LLP One Blue Hill Plaza • Pearl River, New York 10965 ENVIRONMENTAL SCIENCE & ENGINEERING CONSULTANTS	**Monitoring Well Locations** **tesa tape Inc. • Middletown, New York**	**Figure 4**

1.4 MANAGEMENT PLAN ORGANIZATION

Chapter 2 provides a description of each of the AOCs at the site including a summary of the potential to encounter impacted soils or groundwater during intrusive activities at the site. Chapter 3 presents guidelines for monitoring during intrusive activities and Chapter 4 outlines general soil handling, analysis, and disposal requirements.

CHAPTER 2

EXISTING SITE CONDITIONS

2.1 INTRODUCTION

A total of seven areas of concern (AOC) have been identified at the site (Figure 2) of these the four listed below are still under active remediation and existing data indicates that VOC impacted soils and groundwater may still be present in the area.

1. Loading Dock Area
2. Solvent Storage Building
3. Solvent Handling Area
4. Coating Head Area

The investigations conducted from 1996 to 2003 at each of the AOCs on-site included sampling and analysis of soil and groundwater samples. The results served to characterize the nature and extent of the impact and full documentation of the site data is found in the RI/IRM Completion Report for the site (LMS 2003). The primary contaminant of concern for this site is toluene, which was used in large quantities as part of the tape manufacturing process at the site. Several chlorinated volatile organic compounds (VOCs) including 1,1- trichlorethane, (TCA), 1,1- dichloroethane (DCA), and 1,1- dichloroethene (DCE) have also been detected at low concentrations in the site groundwater.

Two of the remaining three AOCs were found not to be impacted by activities at the site. The final AOC associated with the roof downspouts was subject to an IRM that included removal of all impacted soils above the remedial action objectives. Intrusive activities near these AOCs are not anticipated to encounter impacted soils. In these areas normal excavation procedures can be utilized and all subsurface utilities should be identified in these areas prior to any excavation.

2.2 EXISTING REMEDIAL MEASURES

As of February 2004 active remediation continues at the site as part of two IRMs at the site. The NYSDEC has concluded that the IRMs will achieve the remediation goals for the site and that No Further Action is needed other than OM&M and several institutional and engineering controls. The current remedial systems at the site include two separate soil vapor extraction/air sparging systems (SVE/AS). Both systems are house in remedial trailers located on the west side of the facility (Figure 3). The systems include both above ground mechanical equipment and a network of above and below ground piping. The systems are operated and maintained on a monthly basis by LMS Engineers.

Prior to conducting any intrusive subsurface work in the vicinity of the Loading Dock Area, the former Solvent Storage Building, Solvent Handling Area, and Coating Head Area the location of all subsurface and above ground piping associated with the remedial systems must be identified to avoid possible damage to the systems. The power feed for the systems is directly connected to the plant and in the event that the power in the plant must be interrupted LMS should be notified to reset the power to the remedial systems.

2.3 ESTABLISHED REMEDIAL ACTION OBJECTIVES

The established remedial action objectives for the tesa site are based on the NYSDEC recommended soil cleanup objectives and NYSDEC Class GA groundwater standards. The soil cleanup objectives are found in NYSDEC's technical and administrative guidance memorandum (TAGM) HWR-94-4046 entitled "Determination of Soil Cleanup Objectives and Cleanup Levels" (dated 24 January 1994). The soil cleanup objectives are intended to provide a measure of contaminant source control to mitigate further migration of the contaminants to the groundwater from the source area. For toluene the soil cleanup objective is 1.5 mg/kg (1,500 μg/kg). The NYSDEC Class GA groundwater standard is intended to insure that the groundwater's of the state are of drinking water quality, the Class GA standard for toluene is 5 μg/l. The Class GA standards for the chlorinated VOCs found at the site including TCA, DCA, and DCE are also all 5 μg/l.

2.4 AREAS EXHIBITING SOIL IMPACTS

2.4.1 Loading Dock Area

The RI results indicate that the impacted area was very limited in depth and area. Toluene concentrations exceeding the remedial action objective of 1.5 mg/kg were detected in 4 of the 19 total soil samples collected at this AOC and toluene concentrations in the 4 samples ranged from 3.6 mg/kg to 175 mg/kg. The samples with toluene concentrations above the guidance were confined to locations closest to the northeast corner of the ramp leading to the loading dock. Approximately 50 tons of soil were removed from this area in June 2000 as part of a soil removal IRM. Results of soil gas sampling in the nearby mixing room indicate that the toluene impacted soils do not extend further beyond the loading dock into the mixing room within the building. The impacted area associated with the loading dock was very isolated and confined to the dock area. Since a majority of the impacted soils were removed from this area it is unlikely that soils above the remedial action objective will be encountered in this area. However, modifications to the dock will likely encounter low residual concentrations of toluene in the soils. Active soil vapor extraction (SVE) continues in this area along one of the SVE legs associated with System #2.

2.4.2 Solvent Storage Building

Eight of the eleven RI soil samples collected from beneath the floor slab of the solvent storage building exceeded the remedial action objective for toluene. The results of the soil gas sampling within the building confirm the elevated concentrations of toluene in soil beneath the floor slab; significant vapor concentrations were detected at each sample point within the solvent storage building. With the exception of the samples collected adjacent to the sump, the soil and soil gas samples are generally consistent. The distribution of toluene as detected by the soil and soil gas results indicates it is present under the entire floor. Results from the exterior soil sampling collected along the perimeter of the solvent storage building (northwest, southwest, and southeast walls), did not indicate the presence of toluene at levels above the remedial action objective. All soil samples collected along the exterior of the building were found to have toluene present at concentrations less than 0.010 mg/kg. Active remediation by System #2 continues in the vicinity of the solvent storage building. As part of the IRM for this area of concern the building perimeter was ringed with SVE lines and air sparging (AS) points. Performance data from System #2 continues to indicate that significant concentrations of toluene are found below the solvent storage building slab. Any modifications to this building that would breach the floor slab should be carefully considered and planned since it is likely that soils above the remedial action objective will be found.

2.4.4 Solvent Handing Area

The initial investigation in 1996 consisted of 13 soil probes that were completed to various depths in the vicinity of the solvent recovery building. Toluene concentrations in the soil ranged from essentially ND to 142 mg/kg. Of the 25 samples that were collected three of the samples exceeded the remedial action objective for toluene. Nine additional borings were performed in this area to delineate the extent of the known toluene impact. Toluene concentrations in the soils were generally low at each of the 9 locations and all well below the remedial action objectives. These samples served to delineate and define the area of impacted soils found during the first phase of the investigation at the site. Subsequently a SVE/AS system (System #1) was installed to address this area and the system was placed in operation in June 1998 and has remained in operation since that time. Performance monitoring for this system indicate that significant progress has been made toward completing the remediation in this area. Several of the AS wells continue to exhibit elevated toluene concentrations in the shallow groundwater indicating that the remedial activities should be continued in this area.

2.4.5 Coating Head Room

Soil samples collected from the coating head AOC showed toluene concentrations above the remedial action objective in that area of the facility's manufacturing building. The toluene appears

to be confined to the coating head area and the soil conditions, even at the shallow depth of 2 ft below the slab, indicated that the soil was very compact and limits any significant downward migration of toluene. Soil gas samples from the same area suggests that the toluene may be distributed over a wider area beneath the floor slab than was indicated by the soil samples alone. However, the soil gas distribution may be associated with off-gassing of the impacted soil around the coating head. Free phase product was encountered under the floor at two locations. Evaluation of the physical conditions in the area, as well as the soil and soil gas sampling results, implies that the area immediately around the coating head is a source area. In December 2000 SVE lines were installed in this area and the lines were connected to System #1. Performance data from the System #1 coating head lines indicate that significant progress has been made toward removing the toluene from this area. During the most recent monitoring on the soil vapors recovered from the coating head the toluene concentrations ranged from 0.1 to 0.2 ppm/v which is a decrease of approximately 2 orders of magnitude from startup of these System #1 lines.

2.5 AREAS EXHIBITING GROUNDWATER IMPACTS

The areas of toluene impacted groundwater at the site are limited to southwest corner of the facility in the immediate vicinity of the known spill areas associated with the solvent recovery operation, solvent storage building, and the loading dock. The results from the quarterly sampling events conducted to date indicated that the groundwater at the site contains other VOCs. Specifically TCA and its breakdown products are found in the sites groundwater at low concentrations in both the upgradient and downgradient monitoring wells. Generally the groundwater at the site is not a concern for shallow intrusive activities that might be conducted at the facility. However, should dewatering operations be required for deep excavations this water should be managed as potentially contaminated until analytical data proves otherwise. Institutional controls that will be instituted at the facility through environmental easements will restrict the use of groundwater for potable or process water use unless the water is properly treated. Regardless of the groundwater use restrictions the aquifers in the immediate vicinity of the facility exhibit a limited yield and for this reason it is unlikely the groundwater at the site will be used for any purpose.

2.6 SUMMARY OF EXPOSURE PATHWAY ANALYSIS

Currently there are no pathways of exposure to the on-site soil or groundwater contamination. A majority of the site is paved or covered by building foundations that serve to isolate the contaminants from any on-site workers or visitors to the site. The groundwater at the site is not utilized in any capacity, including as a source of drinking water eliminating this potential exposure pathway. The existing engineering controls associated with the IRM systems eliminate any potential for vapor intrusion into the on-site buildings from either the impacted soils or groundwater preventing potential exposure to workers or visitors.

Although future modifications to the facility that would involve intrusive work are not planned at this time this type of work has the potential to expose site workers in several of the AOCs including the solvent handling area, solvent storage building, coating head room, and loading dock area. Any intrusive work in these areas should be carefully assessed and should follow the guidelines presented in Chapter 3 of this management plan. The guidelines describe the necessary monitoring and engineering controls to minimize potential expose and protect worker health and safety.

CHAPTER 3

MONITORING GUIDANCE FOR INTRUSIVE ACTIVITIES

3.1 SITE SPECIFIC HEALTH & SAFETY PLAN

If intrusive activities are planned in the vicinity of the AOCs specific health and safety protocols and procedures must be followed to insure the protection of worker health and safety. The primary potential exposure pathways during intrusive activities are inhalation and dermal contact. A site specific health and safety plan (HASP) must be prepared that identifies site hazards, personnel training requirements, personal protective equipment, monitoring procedures, and site control measures. A site superintendent must be assigned in the HASP who will be responsible for health and safety performance in the field. The site superintendent must direct site activities in accordance with the HASP and can temporarily halt work if an unsafe condition is encountered. The site superintendent must also be aware and comply with all applicable federal, state, and local occupational health and safety regulatory requirements.

3.2 MONITORING PROCEDURES

The primary chemical of concern at the site is toluene and the following information should be used to develop action levels in the HASP:

Toluene

- PEL/TWA- 200 ppm
- STEL/IDLH- 500 ppm
- LEL- 1.1%
- Symptoms of exposure include eye and nose irritation, mental confusion, incoordination.

Previous intrusive activities at the site have shown that typical excavations will not result in any inhalation hazard to on-site workers. However, on-site monitoring must be conducted in the breathing zone to insure that the specific action levels found in the HASP are not being approached in the work zone.

Monitoring procedures during intrusive activities should include monitoring with a combustible gas indicator to monitor for the presence toluene that might be present above the lower explosive limit (LEL). In addition a photo-ionizing detector (PID) should be utilized to monitor for toluene or other volatile organic compounds.

On a daily basis the meters must be calibrated against known standards and this information recorded on a daily log along with any meter readings that are noted. Prior to conducting any excavation the background meter readings should be established within the work zone. During the initial phases of the excavation frequent meter readings must be collected to adequately characterize the airspace in the breathing zone. If meter reading are consistently low the monitoring frequency can be reduced but should be noted at least every 30 minutes or whenever any noticeable changes in the soil characteristics are encountered. Typically concentrations of organic vapors greater than 5 ppm over back ground levels indicate the need to upgrade the level of personal protective equipment (PPE). Specific action levels and the required levels of PPE should be clearly established in the site specific HASP.

CHAPTER 4

SOIL HANDLING, ANALYSIS, & DISPOSAL GUIDANCE

4.1 SOIL HANDLING

Excess soils removed from the following AOCs listed below may exhibit toluene concentrations that exceed the TAGM 4046 guidance value of 1.5 mg/kg.

1. Loading Dock Area
2. Solvent Storage Building
3. Solvent Recovery Area
4. Coating Head Area

Any intrusive activities conducted in these areas must be documented and the proper level of PPE utilized by all workers who may come in contact with the soils and vapors that may originate from the excavation. Specific action levels and the proper level of PPE must be established in the site specific HASP.

Excess soils removed from the AOCs should be managed as potentially contaminated until analytical data proves that the soils exhibit a toluene concentration less than 1.5 mg/kg. During any intrusive activities associated with soil excavation in these AOCs the monitoring procedures described in Chapter 3 should be followed. If the monitoring program indicates levels below the established action levels it is appropriate to continue the work and any excavated soils should be staged on polyethylene sheeting at an established on-site location. This location should be secured from other site workers and on completion of the excavation the soils should be covered with polyethylene sheeting to protect the soils from the elements and to prevent any erosion from the stockpile. Soils from different areas should be segregated into distinct stockpiles and documentation as to the origin, volume, and nature of the soils must be maintained to insure that the soils are managed properly. Stockpiled soils cannot be removed from the site until they are adequately characterized for disposal as described in Section 4.2.

4.2 SOIL ANALYSIS

If excess soils are generated as part of on-site excavations within the impacted AOCs the stock piled soils should be analyzed as soon as possible to determine if they are impacted above the remedial action objective. During this initial characterization 4 samples should be collected per 100 yards

of stockpiled soils. The samples should be submitted to an ELAP certified laboratory for analysis of VOCs using EPA Method 8260B. For initial characterization purposes analyzing for VOCs only is appropriate since past sampling has shown that other contaminants are not present above NYSDEC cleanup objectives. If the soils are found to exhibit VOC concentrations below cleanup objectives it is appropriate to reuse these soils on-site as a source of backfill. The ideal re-use of these soils is below pavement or building floors such that they are isolated from the environment.

If stockpiled soils are considered for off-site disposal they must be fully characterized prior to removal from the site. Typically disposal facilities will require analytical data demonstrating the concentrations of various constituents including:

- VOCs
- SVOCs
- TPH (total petroleum hydrocarbons)
- Pesticides/Herbicides/PCBs
- Total and leachable metals
- Hazardous characteristics

Since each disposal facility has individual permit requirements and special conditions the exact analytical requirements and sampling frequency must be determined in consultation with the receiving facility.

4.3 SOIL DISPOSAL

Although toluene is a listed hazardous waste as identified in 6 NYCRR Part 371 the concentrations in the soils in the vicinity of the four AOCs listed above are relatively low. NYSDEC TAGM-3028 describes the policy for handling soils and groundwater that are contaminated with hazardous waste but exhibit concentrations of the hazardous constituents that are below established action levels. The policy establishes "contained-in" action levels whereby soils found to exhibit concentrations below the action levels may be managed as a solid waste, the "contained-in" action level for toluene is 16,000 mg/kg. In order to dispose of soils under this policy the work must be conducted pursuant to this soil management plan which was submitted in partial fulfillment of the existing Order. This policy cannot be self-implemented by the facility, but will be put into effect by the NYSDEC on a case-by-case basis with a "contained-in" demonstration. The "contained-in" demonstration includes the following elements:

- A work plan identifying the source of the soil and the purpose of the removal. The work plan should also present any existing data for the soils in the area and the analytical

methods that will be used to determine the concentrations in the soil.

- A request must be submitted to the NYSDEC for a "contained-in" determination. This request should include the volume of soil for disposal, analytical data demonstrating that the soil concentrations are below action levels, and the anticipated final disposal location or facility.

If the soils are found to be contaminated above the action level for toluene (16,000 mg/kg) this material must be managed as a hazardous waste and disposed of at a secure permitted facility. If the soils are found to be free of contamination it is appropriate to reuse these materials as on-site fill.

5c

ORANGE COUNTY CLERK'S OFFICE RECORDING PAGE

THIS PAGE IS PART OF THE INSTRUMENT – DO NOT REMOVE

TYPE IN BLACK INK:
NAME(S) OF PARTY(S) TO DOCUMENT

Tesa Tape Inc.

TO

Crotty Road, LLC

SECTION 60 BLOCK 1 LOT 2.12

RECORD AND RETURN TO:
(name and address)

Dorfman, Lynch + Knoebel
51 North Broadway
Nyack, N.Y. 10960

THIS IS PAGE ONE OF THE RECORDING

ATTACH THIS SHEET TO THE FIRST PAGE OF EACH RECORDED INSTRUMENT ONLY

DO NOT WRITE BELOW THIS LINE

INSTRUMENT TYPE: DEED___ MORTGAGE___ SATISFACTION___ ASSIGNMENT___ OTHER Dec

PROPERTY LOCATION

___2089 BLOOMING GROVE (TN)
___2001 WASHINGTONVILLE (VLG)
___2289 CHESTER (TN)
___2201 CHESTER (VLG)
___2489 CORNWALL (TN)
___2401 CORNWALL (VLG)
___2600 CRAWFORD (TN)
___2800 DEERPARK (TN)
___3089 GOSHEN (TN)
___3001 GOSHEN (VLG)
___3003 FLORIDA (VLG)
___3005 CHESTER (VLG)
___3200 GREENVILLE (TN)
___3489 HAMPTONBURGH (TN)
___3401 MAYBROOK (VLG)
___3689 HIGHLANDS (TN)
___3601 HIGHLAND FALLS (VLG)
___3889 MINISINK (TN)
___3801 UNIONVILLE (VLG)
___4089 MONROE (TN)
___4001 MONROE (VLG)
___4003 HARRIMAN (VLG)
___4005 KIRYAS JOEL (VLG)
___4289 MONTGOMERY (TN)
___4201 MAYBROOK (VLG)
___4203 MONTGOMERY (VLG)
___4205 WALDEN (VLG)
___4489 MOUNT HOPE (TN)
___4401 OTISVILLE (VLG)
___4600 NEWBURGH (TN)
___4800 NEW WINDSOR (TN)
___5089 TUXEDO (TN)
___5001 TUXEDO PARK (VLG)
✓ 5200 WALLKILL (TN)
___5489 WARWICK (TN)
___5401 FLORIDA (VLG)
___5403 GREENWOOD LAKE (VLG)
___5405 WARWICK (VLG)
___5600 WAWAYANDA (TN)
___5889 WOODBURY (TN)
___5801 HARRIMAN (VLG)

CITIES
___0900 MIDDLETOWN
___1100 NEWBURGH
___1300 PORT JERVIS

___9999 HOLD

NO PAGES 10 CROSS REF.___
CERT.COPY___ ADD'L X-REF.___
MAP#___ PGS.___

PAYMENT TYPE: CHECK X
CASH___
CHARGE___
NO FEE___

Taxable
CONSIDERATION $___
TAX EXEMPT___
Taxable
MORTGAGE AMT. $___
DATE___

MORTGAGE TAX TYPE:
___ (A) COMMERCIAL/FULL 1%
___ (B) 1 OR 2 FAMILY
___ (C) UNDER $10,000
___ (E) EXEMPT
___ (F) 3 TO 6 UNITS
___ (I) NAT.PERSON/CR. UNION
___ (J) NAT.PER-CR.UN/1 OR 2
___ (K) CONDO

Donna L. Benson
DONNA L. BENSON
ORANGE COUNTY CLERK

RECEIVED FROM: Madison

RECORDED/FILED
05/18/2006/ 16:30:59
DONNA L. BENSON
County Clerk
ORANGE COUNTY, NY

FILE # 20060054951
DECL / BK 12158 PG 0470
RECORDING FEES 55.00
Receipt#579491 dab

DECLARATION OF RESTRICTIVE COVENANT

THIS DECLARATION, made the 25th day of April, 2006, by tesa tape inc., a corporation existing under the laws of the State of Delaware and having an office for the transaction of business at 5825 Carnegie Boulevard, Charlotte, North Carolina 28209.

WHEREAS, tesa tape inc. is the owner of the tti-Crotty Road inactive hazardous waste disposal site which is listed in the Registry of Inactive Hazardous Waste Disposal Sites in New York State as Site Number 3-36-056, located at 135 Crotty Road in the Town of Wallkill, Orange County, New York, ("the Site"), which is part of lands conveyed to TESA TAPE, INC. by deed dated August 25, 1995 and recorded in the Orange County Clerk's Office on September 8, 1995 in Liber 4268 at Page 25 noted as Parcel I, and being more particularly described in Appendix "A," attached to this declaration and made a part hereof, and hereinafter referred to as "the Property"; and,

WHEREAS, the Property is the subject of two consent orders issued by the New York State Department of Environmental Conservation to tesa tape inc., dated March 31, 1997 and September 21, 2002; and,

WHEREAS, the New York State Department of Environmental Conservation set forth a remedy to eliminate or mitigate all significant threats to the environment presented by hazardous waste disposal at the Site in a Record of Decision ("ROD") dated March, 2004 and such ROD required that the Property be subject to restrictive covenants; and,

WHEREAS, Crotty Road, LLC is the purchaser of the property and upon the recording of the deed to the property will become the owner and operator of the site,

NOW, THEREFORE, Crotty Road, LLC, for itself and its successors and/or assigns, covenants that:

First, the Property subject to this Declaration of Covenants and Restrictions is described in Appendix "A" attached to this Declaration and made a part hereof.

Second, unless prior written approval by the New York State Department of Environmental Conservation ("Department") or, if the Department shall no longer exist, any New York State agency or agencies subsequently created to protect the environment of the State and the health of the State's citizens, hereinafter referred to as "the Relevant Agency," is first obtained, no person shall violate any applicable environmental law or engage in any activity that will, or that reasonably is anticipated to, prevent or interfere significantly with any proposed, ongoing or completed program at the Property or that will, or is reasonably foreseeable to, expose the public health or the environment to a significantly increased threat of harm or damage.

Third, the portion of the Property consisting of the loading dock area, the solvent storage building, solvent handling area, and coating head area; hereinafter referred to as the "Restricted Building Property", is shown on the map attached hereto and made a part hereof in Appendix "B".

Fourth, owner and/or operator of the Restricted Building Property shall comply with the Department approved Site Management Plan ("Plan") dated April, 2004 prepared by Lawler, Matusky & Skelly Engineers LLP.

Fifth, the owner and/or operator of the Restricted Building Property shall not undertake any construction in the area of the Restricted Building Property or within a radius of fifty (50) feet of the Restricted Building Property, absent written authorization from tesa tape inc., its successors or assigns, which shall not unreasonably be withheld. The failure of tesa tape inc. to respond within ten (10) business days to a written notice of intent to construct on the Restricted Building Property shall be deemed authorization.

Sixth, the owner and/or operator of the Restricted Building Property shall perform any proposed soil excavations in accordance with the Plan for this Property and asphalt or a clean cap shall be maintained in these areas. The excavated soil must be characterized, managed, and properly reused or disposed of in accordance with the Plan and Relevant Agency regulations and directives.

Seventh, the owner and/or operator of the Restricted Building Property will conduct a soil vapor intrusion pathway analysis if active mitigation measures described in the Plan are not in place and operating.

Eighth, the owner of the Property shall prohibit the Property from ever being used for purposes other than for industrial/commercial uses without the express written waiver of such prohibition by the Relevant Agency.

Ninth, the owner of the Property shall prohibit the use of the groundwater underlying the Property for drinking water or industrial purposes without water quality treatment approved by (i) the Orange County Health Department, (ii) the New York State Department of Health, and (iii) the Department.

Tenth, the owner of the Property shall submit an annual certification to the Department prepared by a professional engineer or environmental professional. The certification will verify that the institutional and engineering controls put in place are unchanged form the previous certification and nothing has occurred that would constitute a violation or failure to comply with any operation, maintenance, monitoring, or site management. The certification will be submitted to the Department to:

New York State Department of Environmental Conservation
Division of Environmental Remediation
625 Broadway
Albany, NY 12233-7016

Eleventh, the owner of the Property shall continue in full force and effect the institutional and engineering controls referenced above until the owner first obtains permission in writing to discontinue such controls from the New York State Department of Environmental Conservation; however, the provisions of the Fifth Paragraph shall remain in force and effect until Seller terminates such provisions in writing.

Twelfth, this Declaration is and shall be deemed a covenant that shall run with the land and shall be binding upon all future owners of the Property and shall provide that the owner, and its successors and assigns, consent to the enforcement by the Relevant Agency of this Declaration and hereby covenant not to contest the authority of the Department to seek enforcement.

Thirteenth, any deed of conveyance of the Property, or any portion thereof, shall recite, unless the Relevant Agency has consented to the termination of such covenants and restrictions, that said conveyance is subject to this Declaration of Restrictive Covenants.

Fourteenth, the owner of the Property shall notify the Department in writing of a transfer of ownership of the Property. The notification will be submitted to the Department to:

New York State Department of Environmental Conservation
Division of Environmental Remediation
625 Broadway
Albany, NY 12233-7016

Fifteenth, in the event of a transfer of ownership, the owner and/or operator of the Property shall provide the subsequent owner and operator of the Property with a copy of the Plan.

THE BALANCE OF THIS PAGE IS INTENTIONALLY BLANK

Sixteenth, the owner on behalf of its successors and assigns, shall allow the Department, its agents, employees, or other representatives of the State to enter and inspect the property in a reasonable manner and at reasonable times to assure compliance with the above stated restrictions and obligations.

IN WITNESS WHEREOF, the parties hereto have caused this agreement to be executed under seal as of the day and year first above written.

tesa tape inc.

By: _____
Name: Charles M. Rigano, Jr.
Title: Director, Finance and Treasurer

Crotty Road, LLC

By: _____
Name: Ephraim Grossman
Title: Manager

::DDMA\PCDOCS\NYC01\7823210\1

STATE OF NEW YORK)
) ss.:
COUNTY OF NEW YORK)

On the 25 day of April, 2006, before me, the undersigned, personally appeared CHARLES M. RIGANO, JR., personally known to me or proved to me on the basis of satisfactory evidence to be the individual(s) whose name(s) is (are) subscribed to the within instrument and acknowledged to me that they executed the same in their capacity(ies), and that by their signature(s) on the instrument, the individual(s), or the person upon behalf of which the individual(s) acted, executed the instrument.

(signature and office of individual taking acknowledgment)

ARTHUR GREENBERGER
Notary Public, State of New York
No. 01GR4715063
Qualified in Queens County
Commission Expires Nov. 30, 2008

STATE OF NEW YORK)
) ss.:
COUNTY OF NEW YORK)

On the 25 day of April, 2006, before me, the undersigned, personally appeared EPHRAIM GROSSMAN, personally known to me or proved to me on the basis of satisfactory evidence to be the individual(s) whose name(s) is (are) subscribed to the within instrument and acknowledged to me that they executed the same in their capacity(ies), and that by their signature(s) on the instrument, the individual(s), or the person upon behalf of which the individual(s) acted, executed the instrument.

(signature and office of individual taking acknowledgment)

ARTHUR GREENBERGER
Notary Public, State of New York
No. 01GR4715063
Qualified in Queens County
Commission Expires Nov. 30, 2008

::ODMA\PCDOCS\NYC01\782321\01

Exhibit A - Property Description

All that certain plot, piece or parcel of land, situate, lying and being in the Town of Wallkill, County of Orange and State of New York, and being more accurately bounded and described as follows:

BEGINNING at a point in a fence line, said point of beginning being the southwest corner of lands of Dion as recorded in Liber 1229, Page 272 of Orange County Deed Records;

THENCE from said point of beginning and following along the fence line on the next two courses and distances;

South 43 degrees 24 minutes 40 seconds west 112.88 feet to a point;

South 53 degrees 35 minutes 20 seconds west 58.62 feet to a point in the northerly line of Crotty Road, said point being 25 feet northerly of the centerline of Crotty Road;

THENCE along the northerly line of Crotty Road and following more or less a fence line, and running parallel to and 25 feet northerly of the center line said road, the next several courses and distances;

South 69 degrees 02 minutes 40 seconds west 278.57 feet to a point,

South 74 degrees 46 minutes 40 seconds west 108.58 feet to a point;

South 88 degrees 04 minutes 10 seconds west 57.54 feet to a point;

North 84 degrees 45 minutes 10 seconds west 145.35 feet to a point;

North 86 degrees 15 minutes 10 seconds west 310.35 feet to a point;

North 89 degrees 26 minutes 50 seconds west 129.10 feet to a point;

South 82 degrees 31 minutes 40 seconds west 100.14 feet to a point;

South 72 degrees 10 minutes 20 seconds west 30.97 feet to a point; said point being the southeasterly corner of land now or formerly of Bookstaver;

THENCE following a fence along the easterly line of lands of Bookstaver and land now or formerly of Saxton on the next three courses and distances;

North 36 degrees 26 minutes 10 seconds west 52.83 feet to a point;

North 40 degrees 41 minutes 05 seconds west 456.80 feet to a point;

North 41 degrees 40 minutes 45 seconds west 107.69 feet to a point;

THENCE North 50 degrees 25 minutes 36 seconds east 42.91 feet to a point;

THENCE North 45 degrees 36 minutes 31 seconds west 104.52 feet to a point;

THENCE along the southerly side of Interstate Route 84 the next several courses and distances;

North 54 degrees 52 minutes 11 seconds east 458.68 feet to a point;

North 58 degrees 28 minutes 16 seconds east 351.16 feet to a point;

North 58 degrees 27 minutes 25 seconds east 350.16 feet to a point;

North 60 degrees 39 minutes 02 seconds east 360.35 feet to a point;

North 60 degrees 42 minutes 50 seconds east 300.41 feet to a point;

THENCE running southerly the next two courses and distances;

South 25 degrees 36 minutes 23 seconds east 312.00 feet;

South 24 degrees 45 minutes 53 seconds east 198.02 feet;

THENCE south 64 degrees 54 minutes 10 seconds west 325.00 feet;

THENCE southerly along the lands now or formerly of Dion South 18 degrees 24 minutes 50 seconds east 727.82 feet to the point or place of BEGINNING.

Exhibit B – Restricted Building Property

Error! Objects cannot be created from editing field codes.

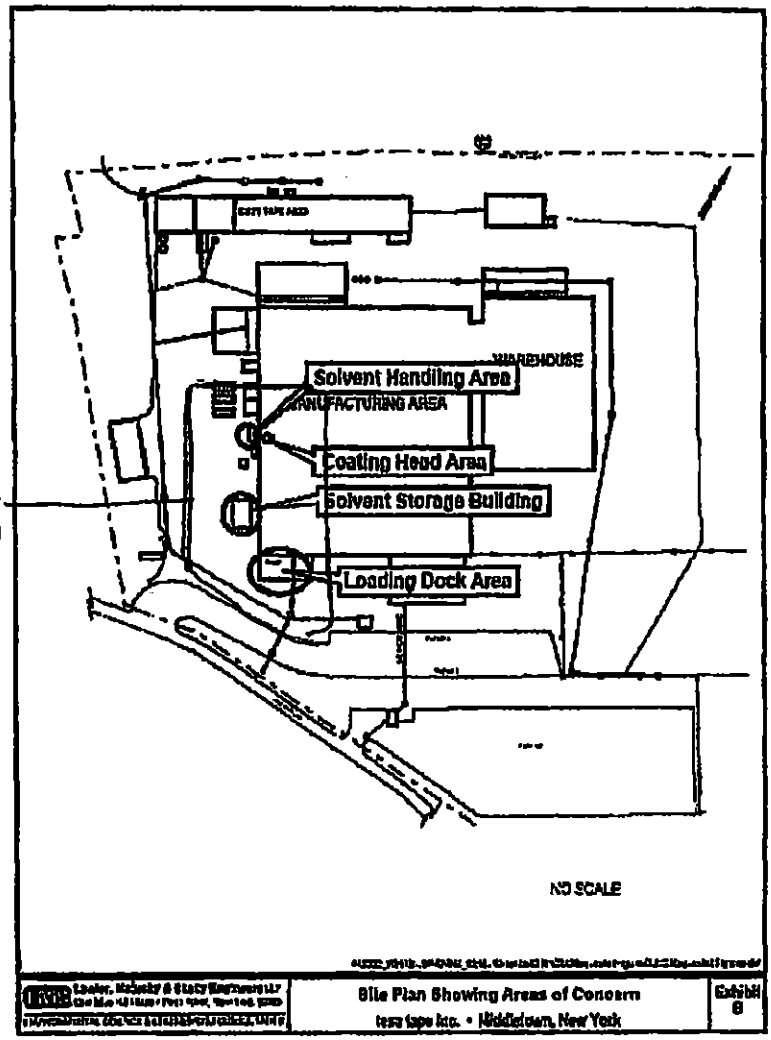

Estimated 50' around restricted area

Appendix B Progress Letter for September 2011 through October 2011

October 19, 2011
File No. 147-104414

Mr. Michael MacCabe, Senior Environmental Engineer
NYS Department of Environmental Conservation
Division of Environmental Remediation
625 Broadway
Albany, New York 12233-7016

Re: Progress Letter for September 2011
Former tesa tape, Inc., Middletown Facility
NYSDEC Site #3-36-56
Order of Consent (Index # W3-0906-02-07)

Dear Mr. MacCabe:

On behalf of tesa tape Inc., HDR is submitting a progress report for the above referenced site. This letter documents the removal of the loading dock sump's water treatment system and closure of the onsite monitoring wells at the former facility (Figure 1), herein referred to as the Site. HDR recommended the treatment system be closed and monitoring wells be abandoned in a letter addressed to NYSDEC dated April 19, 2011. On July 12, 2011 New York State Department of Environmental Conservation (NYSDEC) approved HDR's recommendation to remove the system and abandon the wells.

On August 11, 2011 HDR arrived at the Site and began removing the plumbing, wiring and submersible pump associated with the loading dock sump dewatering system. The current tenant that occupies this portion of the facility aided HDR by moving the 85 gallon granulated activated carbon (GAC) drum to the exterior of the building. A truck subcontracted by General Carbon Corporation of Patterson New Jersey arrived shortly afterwards and loaded the GAC drum onto the truck and removed it from the Site. The used carbon in the drum will be stripped of contaminates, and reactivated at the General Carbon Paterson, NJ facility.

At mid morning HDR met with drillers from Parratt Wolff Inc. (Parratt Wolff) at the Site. Parratt Wolff was contracted by HDR to abandon the thirteen monitoring wells located across the site (Figure 2). All of the wells on site consisted of 2 inch schedule 40 PVC with flush mount curb boxes. The wells were abandoned by either pulling the casing or grouting in place after breaking the bottom well cap (Table 1). The abandonment procedure followed guidance found in CP-43 Groundwater Monitoring Well Decommissioning Policy, NYSDEC, , August 2009.

Prior to abandoning the wells the concrete well pads and steel curb boxes were removed. The concrete and curb boxes were disposed of as solid waste. Each well was grouted in place by pumping grout into the well from the bottom up using a "tremie" pipe. The tremie pipe was lifted up as the well was filled with grout. In some cases the PVC casing was loose and was removed prior to pumping grout into the well. Grout was

pumped into the well until it appeared at the surface. Displaced groundwater flowed into the cavity left behind by the former curb box and was allowed to percolated back into the surrounding soil. After approximately ten minutes the grout had settled approximately six to ten inches in each well (or approximately 18 inchesbelow grade). After the well was grouted and allowed to set the curb box area was filled with asphalt patch to match the area surrounding the well. The asphalt was tamped into place by hand. The only exception is MW-8 which is located in a grassy lot. The former curb box in this area was filled with a mixture of sand and native soil to match the surrounding area.

At this time tesa tape has completed all of the environmental obligations that were part of the sales agreement to the current owner. It is our understanding that the current owner will continue to submit the Periodic Review for the site.

Please contact Michael Pantliano at 8450-735-8300 ext 311 if you have any questions.

Sincerely,

For MDL

Michael D. Lehtinen
Project Manager

cc: S. Fein, Esq., Whiteman, Osterman & Hanna
C. Rigano, tesa tape
E. Grossman, Crotty Associates LLC

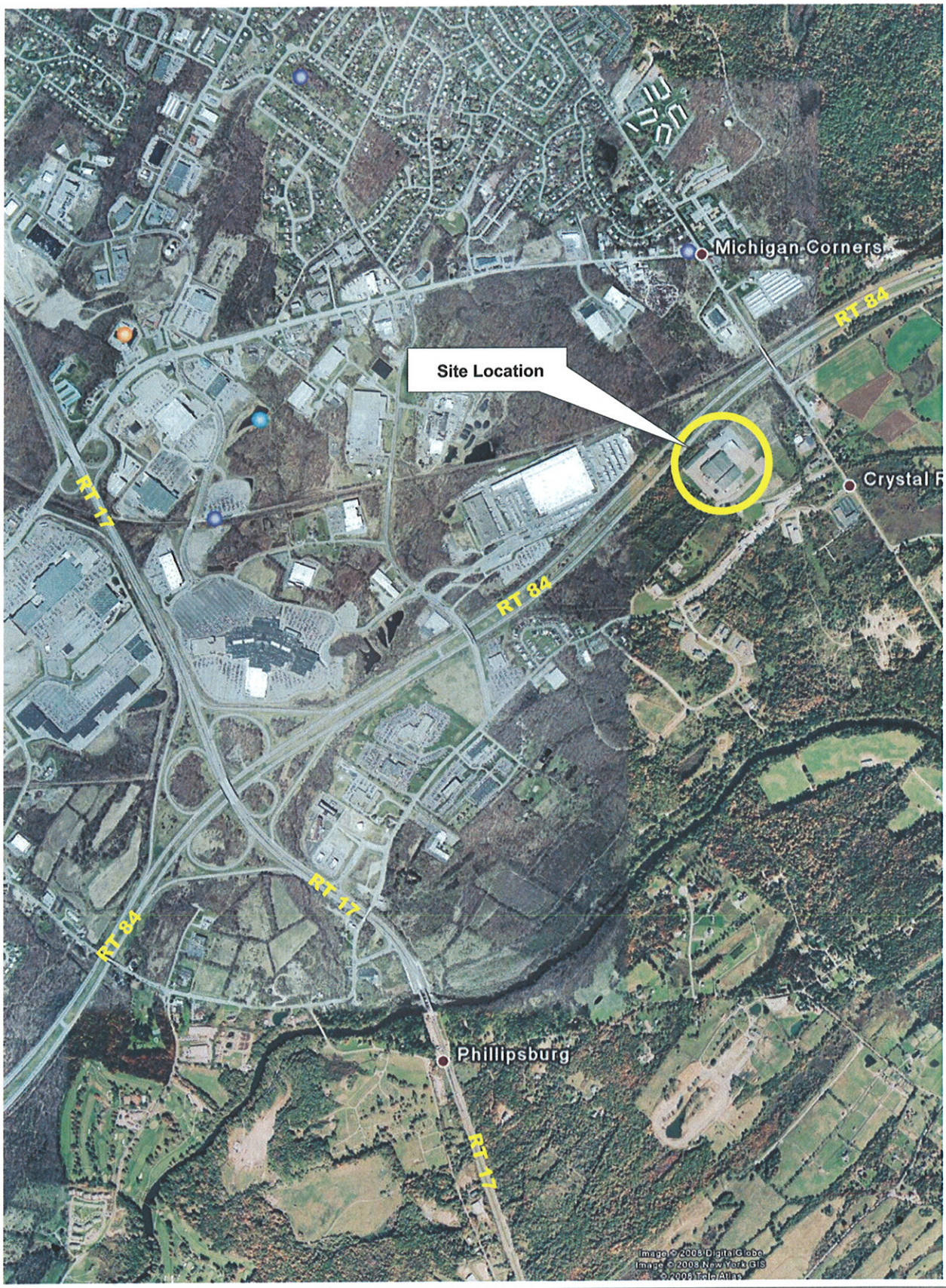

Source Google Earth

HDR	Henningson, Durham & Richardson Architecture and Engineering, P.C. in association with HDR Engineering, Inc. One Blue Hill Plaza Pearl River, NY 10965	**Site Location** **tesa tape Inc. • Middletown, New York**	**Figure 1**

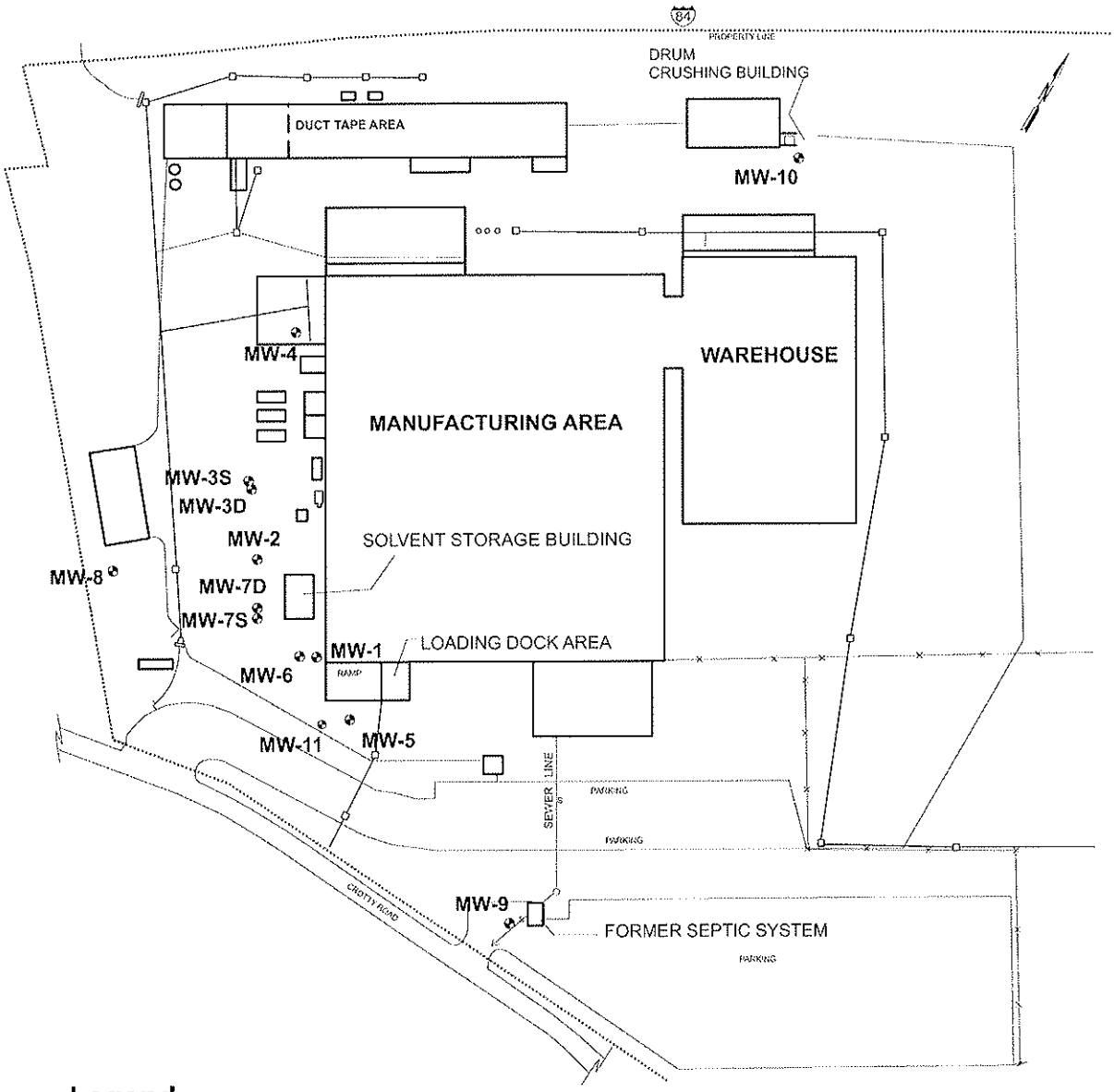

Legend

- Monitoring well

NO SCALE

442232_WHITE...\0442-330_Itl - IRM\Graphics\DTP\RI-IRMreport\RI-IRMreport\RI-IRMreport figures.dsf

HDR | LMS — Henningson, Durham & Richardson Architecture and Engineering, P.C. in association with HDR Engineering, Inc. — One Blue Hill Plaza, Pearl River, NY 10965	**Monitoring Well Locations** **tesa tape Inc. • Middletown, New York**	**Figure 2**

Table 1
tesa tape inc.
Well Closure Details

Well ID	Closure Date	Well Depth (Feet)	Procedure	Gallons of Grout
MW-1	8/11/2011	15.3	Pulled Casing	5
MW-2	8/11/2011	13.1	Broke Bottom Cap	5
MW-3S	8/11/2011	16.8	Broke Bottom Cap	5
MW-3D	8/11/2011	34	Broke Bottom Cap	15
MW-4	8/11/2011	9	Broke Bottom Cap	5
MW-5	8/11/2011	13.6	Pulled Casing	5
MW-6	8/11/2011	13.9	Broke Bottom Cap	5
MW-7S	8/11/2011	12.9	Broke Bottom Cap	5
MW-7D	8/12/2011	34.2	Broke Bottom Cap	10
MW-8	8/12/2011	30	Broke Bottom Cap	10
MW-9	8/12/2011	8.1	Pulled Casing	5
MW-10	8/12/2011	6.4	Pulled Casing	5
MW-11	8/12/2011	21.1	Broke Bottom Cap	12.5

Appendix C New York State Department of Environmental Conservation IC/EC Certification Form

Enclosure 2
NEW YORK STATE DEPARTMENT OF ENVIRONMENTAL CONSERVATION
Site Management Periodic Review Report Notice
Institutional and Engineering Controls Certification Form

Site Details **Box 1**

Site No. 336056

Site Name TTI - Crotty Road

Site Address: 135 Crotty Road Zip Code: 10940
City/Town: Middletown
County: Orange
Site Acreage: 32.700

Reporting Period: April 06, 2020 to April 06, 2025

	YES	NO
1. Is the information above correct?	☒	❑
If NO, include handwritten above or on a separate sheet.		
2. Has some or all of the site property been sold, subdivided, merged, or undergone a tax map amendment during this Reporting Period?	❑	☒
3. Has there been any change of use at the site during this Reporting Period (see 6NYCRR 375-1.11(d))?	❑	☒
4. Have any federal, state, and/or local permits (e.g., building, discharge) been issued for or at the property during this Reporting Period?	❑	☒
If you answered YES to questions 2 thru 4, include documentation or evidence that documentation has been previously submitted with this certification form.		
5. Is the site currently undergoing development?	❑	☒

Box 2

	YES	NO
6. Is the current site use consistent with the use(s) listed below? Industrial	☒	❑
7. Are all ICs in place and functioning as designed?	☒	❑

IF THE ANSWER TO EITHER QUESTION 6 OR 7 IS NO, sign and date below and DO NOT COMPLETE THE REST OF THIS FORM. Otherwise continue.

A Corrective Measures Work Plan must be submitted along with this form to address these issues.

_____ _____
Signature of Owner, Remedial Party or Designated Representative Date

SITE NO. 336056

Description of Institutional Controls

Parcel	Owner	Institutional Control
60-1-2.1	Jacob Mayer, Crotty Road LLC	Ground Water Use Restriction Soil Management Plan Landuse Restriction Building Use Restriction Site Management Plan

An environmental easement in the form of a site management plan will be implemented. The plan will also address residual contaminated soils that may be excavated from the site during future redevelopment. In the case of site redevelopment, the plan will require soil characterization, identification of any use restrictions, and, where applicable, disposal and/or reuse in accordance with NYSDEC regulations. The plan will also require soil vapor sampling, as appropriate, based on future development and/or construction plans.

An environmental easement that will require an evaluation of soil vapor intrusion pathways if the use of the site's buildings changes.

An institutional control will be imposed in the form of an environmental easement that will: (a) require compliance with the approved site management plan, (b) limit the use and development of the property to commercial or industrial uses only; (c) restrict use of groundwater as a source of potable or process water, without necessary water quality treatment as determined by the Orange County Health Department, NYSDOH and/or NYSDEC; and (d) require the property owner complete and submit a periodic certification to the NYSDEC.

The property owner will provide an periodic certification, prepared and submitted by a professional engineer or an environmental professional acceptable to the NYSDEC. To ensure continued protection of public health and the environment, the certification will verify that the institutional and engineering controls put in place are unchanged from the previous certification and nothing has occurred that would constitute a violation or failure to comply with any operation, maintenance, monitoring or site management.

The operation of the components of the remedy will continue until the remedial objectives have been achieved, or until the NYSDEC determines that continued operation is not feasible or technically impracticable.

Description of Engineering Controls

Parcel	Engineering Control
60-1-2.1	Cover System

cover system - Per the March 2004 ROD, the selected remedy includes implementation of a SMP that will include maintenance of the asphalt pavement that serves as a cap over contaminated soil.

Periodic Review Report (PRR) Certification Statements

1. I certify by checking "YES" below that:

   a) the Periodic Review report and all attachments were prepared under the direction of, and reviewed by, the party making the Engineering Control certification;

   b) to the best of my knowledge and belief, the work and conclusions described in this certification are in accordance with the requirements of the site remedial program, and generally accepted e

YES	NO
☒	❑

2. For each Engineering control listed in Box 4, I certify by checking "YES" below that all of the following statements are true:

(a) The Engineering Control(s) employed at this site is unchanged since the date that the Control was put in-place, or was last approved by the Department;

(b) nothing has occurred that would impair the ability of such Control, to protect public health and the environment;

(c) access to the site will continue to be provided to the Department, to evaluate the remedy, including access to evaluate the continued maintenance of this Control;

(d) nothing has occurred that would constitute a violation or failure to comply with the Site Management Plan for this Control; and

(e) if a financial assurance mechanism is required by the oversight document for the site, the mechanism remains valid and sufficient for its intended purpose established in the document.

YES	NO
☒	❑

IF THE ANSWER TO QUESTION 2 IS NO, sign and date below and DO NOT COMPLETE THE REST OF THIS FORM. Otherwise continue.

A Corrective Measures Work Plan must be submitted along with this form to address these issues.

_____ _____

Signature of Owner, Remedial Party or Designated Representative Date

IC CERTIFICATIONS
SITE NO. 336056

Box 6

SITE OWNER OR DESIGNATED REPRESENTATIVE SIGNATURE

I certify that all information and statements in Boxes 1,2, and 3 are true. I understand that a false statement made herein is punishable as a Class "A" misdemeanor, pursuant to Section 210.45 of the Penal Law.

I Jacob Mayer at 135 Croft Road Middletown NY,
print name print business address

am certifying as Owner Representative (Owner or Remedial Party)

for the Site named in the Site Details Section of this form.

Signature of Owner, Remedial Party, or Designated Representative Rendering Certification

Date 7/24/26

EC CERTIFICATIONS

Box 7

Qualified Environmental Professional Signature

I certify that all information in Boxes 4 and 5 are true. I understand that a false statement made herein is punishable as a Class "A" misdemeanor, pursuant to Section 210.45 of the Penal Law.

I Kirsten Myers at 530 7th Avenue, Suite 2007 NY, NY 10018,
print name print business address

am certifying as a Qualified Environmental Professional for the Owner
(Owner or Remedial Party)

07/24/2026

Signature of Qualified Environmental Professional, for the Owner or Remedial Party, Rendering Certification

Stamp (Required for PE)

Date

Appendix D Photo Log

APPENDIX D – Photo Log

Former Tessa Tape – 135 Crotty Road
Middletown, New York

Photo No. D-1 – Addition facing northeast. (03/20/2025) _____ *1*
Photo No. D-2 – Addition facing east, note raised foundation. (03/20/2025) _____ *1*
Photo No. D-3 – Northernmost wall of addition, facing east. (03/20/2025) _____ *2*
Photo No. D-4 – Slab in addition area, good condition. (03/20/2025) _____ *2*

Former Tessa Tape – 135 Crotty Road
Middletown, New York

Photo No. D-1 – Addition facing northeast. (03/20/2025)

Photo No. D-2 – Addition facing east, note raised foundation. (03/20/2025)

Photo No. D-3 – Northernmost wall of addition, facing east. (03/20/2025)

Photo No. D-4 – Slab in addition area, good condition. (03/20/2025)

Appendix E Kevin L. Patton, P.E. Geotechnical Investigation Report, dated July 19, 2020

KEVIN L. PATTON, P.E.
36 PATTON ROAD
NEWBURGH, N.Y. 12550
845 275-7732 PATTONGEOTECH.COM

CLIENT:	Upstate Glass Tempering 135 Crotty Road Middletown, N.Y.	PROJECT: PROJ. No.: DATE:	Building Addition Town of Wallkill, N.Y. 20219 July 19, 2020

GEOTECHNICAL INVESTIGATION REPORT

Table of Contents

Section		Page
1.	PROJECT DESCRIPTION	2
2.	SOIL INVESTIGATION AND TEST RESULTS	4
2.1.	Soil Boring Blow Counts and Laboratory Data	5
2.2.	Subsurface Profile and Summary of Soil Conditions	7
3.	EVALUATION	8
3.1.	Subgrade and Bearing Strata	8
3.2.	Subgrade Preparation	8
3.3.	Excavation	9
3.4.	Fill Materials and CLSM	9
3.5.	Fill Placement and Compaction	11
3.6.	Compaction Requirements	11
3.7.	Testing	12
3.8.	Geosynthetic Materials	13
4.	DESIGN VALUES AND RECOMMENDATIONS	15
4.1.	Bearing Capacity and Soil Pressure	15
4.2	Control of Groundwater and Soil Gases	16
4.3	Seismic and Expansive Properties	16
5.	NOTES AND LIMITATIONS	18

SOIL TECHNICAL NOTES
BORING LOCATIONS
SUBSURFACE PROFILE
SOIL BORING LOGS
LABORATORY TEST REPORTS
USDA SOIL REPORT DATA

1. PROJECT DESCRIPTION

This geotechnical investigation report was prepared for use in the design and construction of an addition to the existing building, which is a one-story flat-roofed commercial/light-industrial-style structure, with a slab-on-grade floor and a flat roof, with a metal-sheathed wall along the connection to the addition. The one-story addition will extend approximately 233 feet north and 98 feet west from the southwest corner of the existing structure, with a small cut-out at its southwest corner, for a net footprint of about 22,443 square feet.

The area of the proposed addition is currently pavement, mostly blacktop with some concrete, sloping gently down toward the west. The estimated slab elevation is 461 feet, existing grade along the building connection is approximately 460.5 feet, and the existing low point in the addition area is at about 458.5 feet, near the southwest corner. Aerial photos from Google Earth indicate that several mechanical units, above-ground tanks, and/or other structures were once situated in the project area, most of which were removed sometime between 2001 and 2006, with everything gone by 2011. Several concrete footings and pads from these components remain in place in the north third of the addition area. A few decommissioned underground tanks are indicated near these pads and in the area extending through the middle third of the building; there are a few tank fill pipes that appear to have been filled with grout. The water main appears to cross the north end of the addition into the existing building, and another main water line may run parallel to the existing west building wall. Other active or abandoned utilities may also be present. About half of the south half of the addition area is covered by a patch of newer-looking blacktop, and there is a regularly-spaced grid of holes in the blacktop; the holes probably correspond to support post locations for a large mechanical unit that was situated here.

The USDA Soil Survey indicates that the native topsoil types in the project areas are Mardin gravelly silt loam and Erie gravelly silt loam, both of which form over deep deposits of glacial till. Erie soils typically form over clayey till, and Mardin soils typically form over till composed of silty clay with some sand and little gravel, with few to many channers (small flat stones) and boulder-size flagstones. The native soils encountered in the borings were generally consistent with the Soil Survey data for both types, ranging from clayey till to very sandy, gravelly till. Some shallow fill is also present at the surface, in addition to any existing tanks, utilities and concrete pads. Bedrock is believed to be at about fifteen feet depth, with weathered rock encountered slightly above this depth. Crystal Run brook flows north to south along or near the west property line, mostly

below grade in a culvert; it is sufficiently distant that it should not affect the building addition.

View facing southeast across the building addition area, with the drill rig working at boring B1.

View facing northeast across the middle and rear of the building addition area.

2. SOIL INVESTIGATION AND TEST RESULTS

On Thursday, July 2, 2020, four soil borings were drilled in the addition area, and a fifth was attempted, meeting shallow refusal in concrete. Borings were drilled by the wash-rotary method, using a truck-mounted drill rig. Drilling was performed by Diamond Drilling, Inc., of Port Jervis, N.Y. The subsurface investigation was supervised and witnessed by Wyeth Patton, under the direction of Kevin Patton, P.E.

Soil sampling and testing were performed using the Standard Penetration Test (SPT,) using a Safety Hammer, operated by rope-and-cathead, in accordance with ASTM D1586 (Standard Method for Penetration Test and Split-Barrel Sampling of Soils.) The SPT provides the Blow Count "N" Value, equal to the number of blows of the 140-pound steel hammer that were required to drive the 2-inch outside diameter split-spoon sampling tube into the soil, over a twelve-inch increment. Soil samples are also recovered by this method, and additional field tests were performed as noted on the soil boring log, using a hand penetrometer to test bearing capacity. Laboratory testing was performed on representative soil samples, for moisture content, particle size distribution and Atterberg Limits. USCS classifications of the soil, per ASTM D2487 and D2488, are provided on the logs and on the subsurface profile drawing.

Aerial Photo, April 2001, showing equipment and structures in the building addition area.

2.1. Soil Boring Blow Count and Laboratory Data

Field Blow Count Values, N					
	B1	B2	B3	B4	B5
Approx. Elev.:	460.5	460.5	460.1	458.5	460.2
Depth, ft.: 1	17	44	56	58	50/2″
3	21	81	48	27	
5	26	78	25	50/3″	
7	76	20	27	43	
9	98	41	28	58	
11	54	105	50/1″	55	
13		69		50/5″	
16	50/1″				
Auger Refusal			13 ft		2 ft

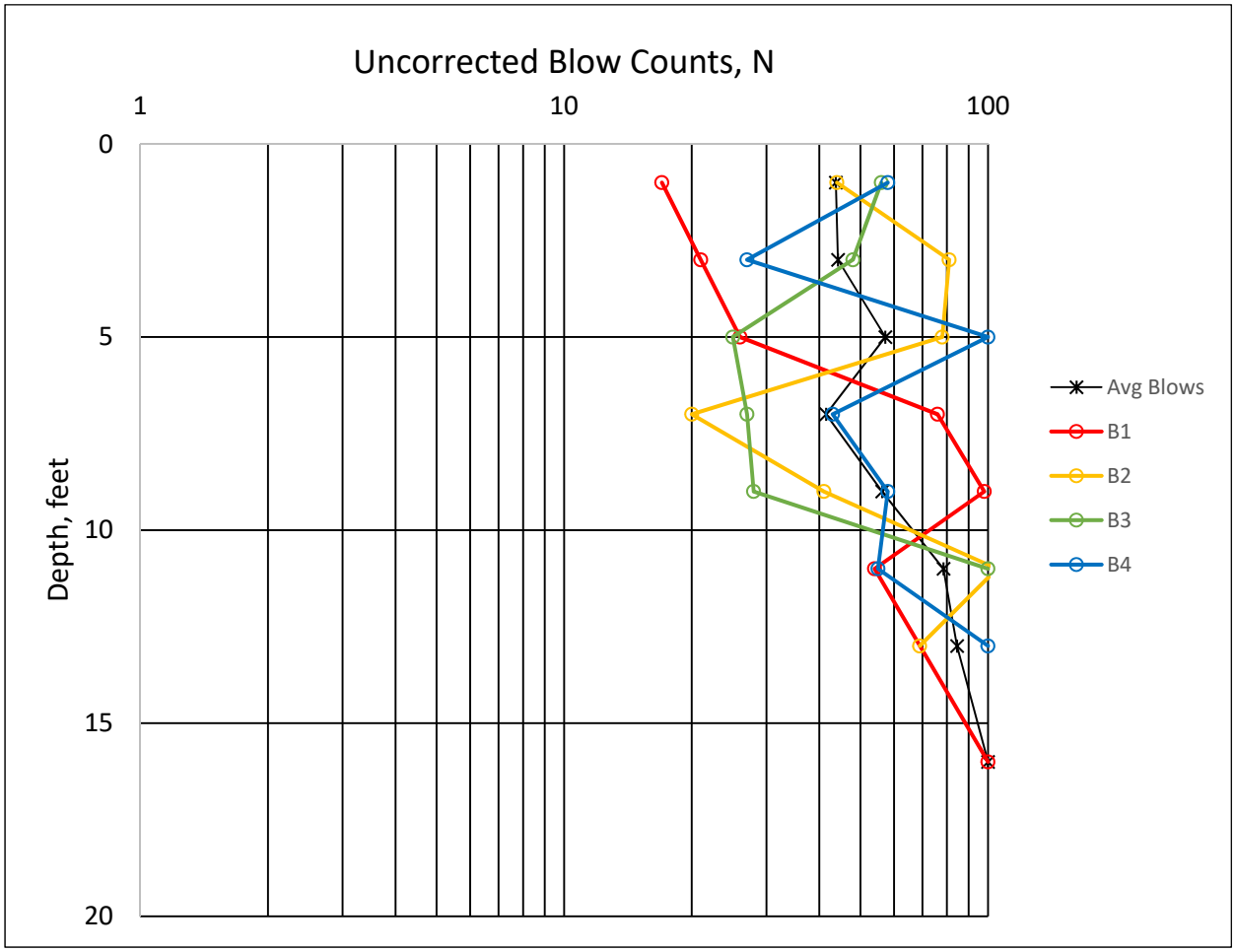

Natural Moisture Content, Percent				
Depth, feet	B1	B2	B3	B4
1	15.9	10.1	16.1	10.9
3	15.5	16.9	12.6	11.5
5	15.8	11.7	17.6	24.8
7	16.2	11.2	10.6	10.5
9	8.5	11.8	9.7	10.6
11	11.5	9.0		11.8
13		9.6		13.8

SOIL TEXTURE			
Particle Size Analysis			
Sample		B2-S4	B3-S5
Depth		7 feet	9 feet
USCS Class		SC-SM	SC-SM
Sieve Size	mm	Percent Passing by Weight	
¾″	19.0	97	90
#4	4.75	73	64
#10	2.00	62	51
#40	0.425	48	39
#200	0.075	35	27
Hydrometer	0.050	32	24
	0.005	13	10
	0.002	6	5
Atterberg Limits			
Liquid Limit		18	19
Plastic Limit		13	14
Plasticity Index		5	5

Moisture contents of the samples mostly indicated moist to very moist conditions in dense soil. Due to the sampling method, the sieve-and-hydrometer analyses exclude particles that are medium gravel-size or larger. Occasional cobbles and a few boulders are expected in the soil but are not represented by the tests.

2.2. Subsurface Profile and Summary of Soil Conditions

Subsurface conditions encountered in the borings are described in the boring logs and are summarized in the drawing attached to this report. The investigation indicated that typically, blacktop, fill and disturbed soil extend to a foot or two below grade, over native soils consisting of layered glacial till. The till composition ranges from sandy clay to sandy gravel with traces silt, and is mostly dense to very dense, with no significant weak zones encountered. Perched groundwater was encountered occasionally, at depths of six feet and greater. Weathered rock was encountered at twelve feet depth (elevation 447±) in boring B4, and the three other successful borings each stopped close to this elevation in very hard soil with a composition that is typical of the local till when it is in close proximity to bedrock. Hard shale bedrock is estimated to be at about elevation 440 to 445.

Fill material was deeper in boring B1, near the southwest corner of the existing building. Here the fill extended to about six feet depth, and was composed of clayey glacial till, probably site-borrow soil. This fill zone was not as hard as the soil in the rest of the borings, but would still be rated as 'very stiff.' It contained trace organic matter, but not to an extent that it would lead to settlement or softening. Careful examination of the footing subgrade soils should be performed in this area during construction, to check for deficiencies.

Existing foundations, utility lines, and in particular the grout-filled underground tanks which may be present, are more of a concern than the fill materials that were encountered. These will typically need to be removed where they occur under footings and/or heavy machinery bases. A relatively small 2500-gallon tank filled with grout will weigh over twenty tons, and partial or complete removal of tanks is a potentially difficult task. Tanks may also be surrounded by an envelope of pea gravel, and beyond that a small zone of wet, soft soil, which may require removal and replacement. Where foundations or other obstructions are present below slabs, but will not affect footings or foundations, they should either be completely removed, or should be demolished to at least six inches below the bottom-of-slab elevation, to minimize slab cracking, and preferably to at least 24 inches below the slab, to allow for future utility installations.

3. EVALUATION

3.1. Subgrade and Bearing Strata

The conditions encountered in the investigation were evaluated for their impacts on construction methods, structural-geotechnical design, and long-term performance. The native soil in the building addition area is suitable to support shallow footings and foundations. The soil consists of layered glacial till, usually brown, gray or mottled, with variable composition. The existing fill is also suitable to support footings and foundations, but must be thoroughly examined to verify that it does not contain weak or deficient zones.

3.2. Subgrade Preparation

Existing asphalt pavement and base course shall be removed from the building pad. These layers typically totaled about one foot thick. Any existing pipes that are to be abandoned in place should be grouted solid, unless their potential to cause impacts resulting from collapse, water conveyance or other causes is not felt to be significant. Where pipes are removed, backfill the trench in controlled compacted lifts. Existing concrete pads and footings shall be removed in full, or shall be demolished to sufficient depth to avoid interference with the performance or function of the work. Unless otherwise determined by the Designer, remove any decommissioned underground tanks in their entirety, trim the sides of the excavation back to firm, stable soil, verify that the bottom of the excavation is in acceptable bearing soil, and backfill in controlled compacted lifts, as specified for fill under foundations. Flowable fill (CLSM) may also be used to backfill these excavations, as discussed later in this report.

Remove any remaining deficient materials from the surface of the building pad. Perform initial grading, then proof-roll and compact the surface with a single-drum vibratory soil roller. Make at least two one-way vibratory passes over each location, and correct any deficient areas.

Prepare footing areas using methods that minimize disturbance of the subgrade. Compact the surface to consolidate any soil that was loosened during excavation. Remove any unsuitable materials that are encountered, and replace with controlled compacted fill. Test the bearing capacity of the footing subgrade. Footings may bear on the prepared subgrade, or on controlled compacted fill or CLSM placed over the subgrade; if fill or CLSM is used, it shall extend across the full width of the excavation.

3.3. Excavation

The native soils may be excavated using conventional heavy equipment, such as tracked excavators. Few boulders are expected, but some could be present. No bedrock is expected within the building area. Demolition and removal of existing pavement, foundations, concrete pads, possibly grouted tanks, etc. will be required.

The soils are predominately OSHA Type A, requiring a minimum slope of 0.75-to-1 in shallow excavations, with benching permitted. Soil types for excavation requirements must be confirmed during construction. Use extra care when excavating near existing or former foundations or underground utilities, where looser soils or trapped pockets of perched groundwater may be present, which could cause weakening of initially-stable cuts.

Groundwater seepage rates are expected to be low to moderate, after initial draining of any trapped water. Groundwater seepage and stormwater should be removed promptly from the excavations.

3.4. Fill Materials and CLSM

Soils excavated from the site are expected to small in quantity, and of only fair quality, for re-use as fill and backfill for foundations, slabs and pavement areas. Typically, the borrow soil will require some drying prior to placement. Boulders and large cobbles must be removed from the fill. Large clumps of clayey soil must be broken up.

Imported fill will likely be required to raise the building pad to the required elevation. Fill used below foundations and slabs should consist of well-graded granular material, i.e. imported Structural Fill, which shall be good-quality bank-run sand and gravel or crushed stone, and should comply with the gradation limits below. Structural Fill may also be used as foundation backfill. Structural Fill HD (Heavy Duty) should be used in areas to be protected from heavy construction traffic and where subgrade stabilization is needed. Structural Fill HD is also recommended for use in the top twelve inches of fill under slabs that will be subjected to forklift traffic.

Sieve size		Structural Fill	Structural Fill HD
Inch	mm	Percent Passing by Weight	
4″	100	100	100
1½″	37.5	50-100	50-90
#4	4.75	20-70	20-50
#40	0.425	5-50	5-25
#200	0.075	0-25	0-10

All fill materials shall consist of sound, durable particles, shall be free from frost, garbage, construction debris or other deleterious material, and shall be substantially free from organic matter and roots. Recycled crushed concrete and masonry from a registered source may be acceptable for some applications, subject to approval by the Designer of Record. Fill shall not be placed over frozen or unstable soil, unless approved by the Engineer.

CLSM (Controlled Low-Strength Material, aka flowable fill or k-crete,) may be used under footings and foundations and may also be used to backfill trenches or other excavations, typically where rapid fill placement is required, fill areas are narrow, or the use of conventional compaction methods is not practical. A CLSM mix consisting of sand, cement and water, with a 56-day compressive strength of 50 to 150 psi, is suitable for these applications. CLSM may produce high fluid pressures during placement, and caution must be used for placements against foundation walls, near unbraced cuts, etc. Pipes or tanks can also float if not properly restrained during placement. CLSM should not be placed against unprotected aluminum; CLSM containing flyash should not be used in contact with cast iron or ductile iron. Hardened CLSM masses may also adversely affect groundwater flow, possibly causing erosion under or along the CLSM, particularly in sloping trenches. If CLSM is to be used, a geotechnical review should be performed of the proposed installation.

Other Fill Materials:

- Crushed stone base course for slabs-on-grade should consist of ASTM C33 #56 or #57 stone (⅜- to ¾-inch size,) or as required by the slab system design.
- Crushed stone or gravel for footing drains should consist of ASTM C33 #5, #56 or #57 stone (¾-inch or ⅜-¾-inch size.)
- Well-graded granular subbase material (NYSDOT Item 733-04 'Item 4' or similar) should be used under sidewalks and exterior slabs.

3.5. Fill Placement and Compaction

Fill shall be placed in controlled compacted lifts, with compacted thicknesses of not more than twelve inches. Reduce the lift thickness if required to attain the specified percent compaction and when using small compaction equipment.

Fill materials should typically be compacted at a moisture content within two percent of optimum moisture, as determined by ASTM D1557. If the fill is too dry, mix in water as the fill is spread. Coarse-graded crushed stone products may be compacted in a wet condition, provided they remain stable and do not rut or 'pump' during compaction. Cohesive fill materials (silty and clayey soils) shall be thoroughly broken up prior to compaction.

Fill that is shallow over the native soil (less than two feet of cover) should be compacted with small to mid-size equipment, such as vibratory trench rollers or single-drum soil rollers with a nominal size of seven tons or less. In areas with limited access, vibratory plate tampers or jumping-jack tampers may be used. Heavier equipment may be used over deep granular fill. Backfilling of foundation excavations should be completed prior to erection of building framing. Do not allow water to accumulate in footing excavations prior to backfilling.

Pipe bedding in utility trenches may act as groundwater flow routes during or after construction. Interrupt coarse granular bedding with occasional zones of compatible lower-permeability soil to control minor seepage. Avoid the use of excessively coarse pipe bedding material that can allow fines to wash in from the surrounding soil. Contact the Engineer if excessive groundwater is encountered.

Open-graded stone base course material for slabs-on-grade should be graded level and seated with one or more compaction passes, to help resist displacement during slab area preparation and concrete placement.

3.6. Compaction Requirements

Compact each lift of fill with at least six one-way compaction passes, even if the required compaction percentage is obtained with fewer passes. Each compaction pass shall be made at a slow walking speed (less than 3 mph,) with the equipment passing completely over all areas of the fill. Fill materials shall be compacted to at least the following

percentage of the ASTM D1557 maximum dry density. For coarse-graded fill materials with more than thirty percent retained on the ¾-inch sieve, the ASTM D4253 Maximum Index Density test may be substituted for the D1557 test.

Location	Min. Percent
Below footings/ foundations	95
Foundation Backfill	95
Fill under slabs	95

3.7. Testing

Compaction testing is required by Code for fill materials that support footings or foundations. Inspection of fill placement and additional testing are required when so directed by the local Code Enforcement Official or when specified by the Designer of Record. Recommended test procedures and frequencies are provided below.

BEARING CAPACITY: The specified (design) bearing capacity as indicated by a Static Cone Penetrometer or equivalent device shall be obtained within 3 inches of the surface in footing excavations. Tests should be performed at intervals of fifty feet or less in continuous footings, with at least one test on each footing line and in each isolated spread footing. The soil throughout the bearing area should be probed thoroughly to check for soft spots. Sudden changes or significant variations in bearing capacity should be evaluated. Routine testing is not feasible in areas of predominately gravelly soil, in those areas, verify that no loose material is present.

COMPACTION TESTING: Compaction tests of fill and backfill should be performed at representative locations in each lift, with at least one test per 50 linear feet performed in continuous footings and trenches, one test per lift at each isolated spread footing, and one test per 1000 square feet in slab areas, per lift.

Compaction tests should be performed with a nuclear moisture-density gauge, per ASTM Test Method D6938, unless otherwise approved. Required percent compaction values are provided elsewhere in this report.

PROOF-ROLLING: Proof-rolling shall be performed to evaluate soil conditions during subgrade preparation, as previously specified. Additionally, if slabs-on-grade will be

placed by direct discharge, proof-rolling of the main traffic lanes is recommended, to verify that the slab base will remain stable when subjected to ready-mix truck traffic. Proof-rolling should be performed using a vehicle that simulates the proposed traffic, driving slowly back-and-forth over the entire surface. Multiple passes should be made over representative locations to check the effects of cyclic loading. If the soil exhibits excessive deflection, rutting, or cracking, additional drying of the subgrade and/or the use of lighter construction equipment may be required.

CLSM: When flowable fill is used to support footings or foundations, at least one set of four 6x12-inch test cylinders shall be cast from each day's placement, per ASTM D4832. Test three cylinders for unit weight and for compliance with the specified strength requirements. The fourth cylinder may be retained for later testing; cast additional cylinders if early tests are needed.

3.8. Geosynthetic Materials

Geosynthetic materials are expected be used for reinforcement and drainage applications at the site on an as-needed basis, or where required by Code, such as for footing drains.

Geosynthetic materials shall be installed over a smooth and evenly shaped subgrade, to avoid 'tenting' of the material over voids or high points. The geosynthetic shall be installed substantially free from wrinkles, and fill material shall be placed and spread in a manner that does not displace or damage the geosynthetic material. Vehicles shall not drive on the exposed geosynthetics. The following material types are recommended; the types listed are typical examples of suitable products.

Drainage Separation: For footing drains and similar applications, a woven drainage geotextile with at least 4% open area, with an apparent opening size of 0.21mm (#70) or smaller, should be installed between the native soils and open-graded drainage zones. A suitable product is Carthage Mills "Carthage 6%." Non-woven geotextiles are not recommended for use in this application, due to fine particles in the native soil that may clog the fabric.

Subgrade Reinforcement: Typically, a woven reinforcing geotextile such as TenCate Mirafi 600X should be used where needed to improve the stability of soft subgrade soils. Geogrids may be used instead of woven geotextiles, especially if free drainage is desired.

A minimum of twelve inches of granular fill cover is typically required to mobilize the strength of the reinforcing geosynthetic.

Subgrade Separation: Where fines from the subgrade may infiltrate into an overlying granular layer, and strengthening of the subgrade and free vertical drainage are not required, a needle-punched non-woven geotextile such as Mirafi S600 should be used.

4. DESIGN VALUES AND RECOMMENDATIONS

4.1. Bearing Capacity and Soil Pressure

Soil engineering properties for design are summarized in the table below. The values assume that the building will be supported by a conventional spread footing foundation with slab-on-grade floor, as described in the previous sections, and will be provided with proper drainage.

Allowable Bearing Capacity, q_a, lbs/sq ft	4000
Minimum Bearing Depth from Top of Slab, inches	24
Minimum Footing Width, inches	24
Soil Moist Density, γ, lbs/cu ft	130
Lateral Bearing Capacity (psf per ft below grade)	150
Effective Internal Angle of Friction, $\emptyset$	34°
Coefficient of Friction (vs. concrete)	0.25
Coefficient of Active Earth Pressure, k_a	0.28
Coefficient of Passive Earth Pressure, k_p	3.54
Coefficient of At-Rest Earth Pressure, k_o	0.44
Modulus of Subgrade Reaction, k, psi per inch	275

Footings subject to frost shall bear at least 42 inches below finished grade, or shall be otherwise protected from frost. Bearing elevations of footings shall be established such that a line drawn between the bottoms of two adjacent footings is not steeper than 30 degrees between the closest points on the footings. (Slope of 1 vertical to 1.75 horizontal.)

Up to one inch of settlement can be expected for the new foundation during construction, due to normal elastic compression of the soils below the footings. Potential differential settlement is estimated at one-half inch for adjacent columns with normal spacing.

At the connection of the addition to the existing building, the addition should be structurally independent from the existing building, to the extent practical, at least until most of the loads have been applied to the new foundation. The new building load will cause minor deflection of the soils under the end of the existing building; the magnitude of this settlement is estimated to be on the order of ¼-inch or less.

4.2. Control of Groundwater and Soil Gases

Minor groundwater seepage should be expected in foundation areas during and after construction. Conventional damp-proofing, including placement of slabs-on-grade over a vapor barrier and a vapor-permeable base course, with adequate building ventilation, are appropriate for control of soil gases.

Installation of footing drains is not required for the addition, which will be above grade. Including footing drains or underdrains in the design could help control groundwater and remove stormwater during construction, and may help reduce moisture after construction, but is optional. Foundation excavations should be backfilled with well-graded granular fill, to limit stormwater infiltration. Stormwater runoff must be directed away from the foundation and may not be directed to the footing drains.

Soil gases that could normally be expected to impact the structure are water vapor and radon. Thorough foundation damp-proofing, as noted above, placement of dense concrete in slabs-on-grade, (low water-to-cementitious ratio, thoroughly consolidated,) and sealing of all wall-to-slab joints, concrete cracks, pipe penetrations, drainage sumps, etc. are usually effective in controlling transmission of these gases to interior spaces. If an open-graded base course is used under the slab, a passive vapor mitigation system can be included, using small-diameter PVC pipes. The potential for these gases or other gases to adversely impact the use of the building is estimated to be low, if the above recommended practices are used.

4.3. Seismic and Expansive Properties

The Seismic Site Class and Seismic Design Category for the proposed construction were determined per section 1613 of the New York State Building Code and ASCE 7-10. Seismic values for the site were obtained from the current database maintained by the Applied Technology Council, Redwood City, Cal., and are consistent with the published maps in the Building Code. Values were are provided below.

The seismic design values are based on the "risk adjusted maximum probable earthquake." These are not the maximum values that *could* occur, they are values that are not likely to be exceeded during the service life of a typical structure.

Occupancy Category	I/II/III	
Seismic Site Class	C, Very Dense Soil and Soft Rock	
IBC Seismic Design Category	**B**	
Maximum Acceleration	0.2 sec S_S 1.0 sec S_1	0.204 g 0.066 g
Maximum Spectral Response Acceleration	0.2 sec S_{MS} 1.0 sec S_{M1}	0.245 g 0.112 g
5% Damped Spectral Response	0.2 sec S_{DS} 1.0 sec S_{D1}	0.163 g 0.075 g

Liquefaction Potential

The soils encountered in the investigation have negligible liquefaction susceptibility. The soils are dense and do not have texture/permeability combinations that are associated with loss of shear strength during anticipated seismic events. No special mitigation measures are required.

Expansive Soils and Frost Heave

The soils encountered in the investigation have a very low potential for expansion due to shrinking and swelling resulting from moisture changes. This behavior is typically associated with high-plasticity silt and clay soils. Physical testing and qualitative examination indicate that the soil properties do not meet the criteria for potentially expansive soils as defined in section 1803.5.3 of the Code. No mitigation measures are required.

The on-site soils are moderately to highly susceptible to frost heave. Frost heave can be minimized by providing good drainage and by thoroughly compacting the soil. Well-graded granular fill should be used in areas where frost heave could result in damage.

5. NOTES AND LIMITATIONS

Please see the attached pages for additional information. Subsurface conditions encountered during construction shall be compared to the soil boring logs and this report; any significant variations from anticipated conditions must be evaluated for their effect on the design. This report summarizes the results of a limited investigation and does not purport to predict every variation in subsurface conditions.

This geotechnical investigation was conducted to evaluate the engineering properties of the soils at the site, to aid in the design of the proposed work. The investigation did not include evaluation of the potential effects of the proposed construction on other properties, nor did it include inspection of, or sampling for, items of environmental concern such as the presence of soil contaminants or of regulated wetlands, and did not include review of local zoning regulations, codes, floodplain boundaries or similar matters, unless specifically referenced in the report. This investigation was conducted solely for the use of the Client, the Client's Project Designers and Agents and the Authorities Having Jurisdiction; this report should not be used by others, nor for any use other than its stated purpose, without contacting the Engineer. Any such use is solely at the user's risk.

Prepared by Kevin L. Patton, P.E.

KEVIN L. PATTON, P.E.
36 PATTON ROAD
NEWBURGH, N.Y. 12550
845 275-7732 PATTONGEOTECH.COM

Soil Technical Notes:

Soil Classifications, Descriptions and Properties

The USCS (Unified Soil Classification System) was used to classify the soils in this report. The USCS is described in ASTM D2487 (laboratory test method) and D2488 (visual-manual method.) The USCS classification gives a 'Group Symbol' and 'Group Name' based on particle size distribution (gradation,) clay properties (Atterberg Limits) and basic composition (mineral or organic.)

USCS Soil Classes

Soils with less than 5% passing the #200 sieve:

GW, GP, SW, SP – Well-graded gravel, Poorly-graded gravel, Well-graded sand, Poorly-graded sand.

Soils with 12% to 50% passing the #200 sieve:

GC, GM, GC-GM, SC, SM, SC-SM – Clayey gravel, Silty gravel, Silty clayey gravel, Clayey sand, Silty sand, Silty clayey sand.

Soils with 5% to 12% passing the #200 sieve use a dual symbol, such as SW-SC (Clayey well-graded sand.)

Soils with more than 50% passing the #200 sieve:

CL-ML, ML, CL, MH, CH, OL, OH – Silty clay, Silt, Lean clay, Elastic silt, Fat clay, Organic silt, Organic clay.

Highly organic soils:

PT – Peat.

The soil group name is modified with the term 'with sand' or 'with gravel' if the soil contains more than 15% of these materials; clays and silts with 30% or more plus-#200 material are described as 'sandy' or 'gravelly' (whichever is predominate.) Examples – GM, Silty gravel with sand; CL, Gravelly lean clay.

Particle size

>12" (300mm)	Boulders
12" to 3" (300-75mm)	Cobbles
3" to #4 (75-4.75mm)	Gravel
#4 to #200 (4.75-0.075mm)	Sand
<#200 (0.075mm)	Silt & Clay

Organic Soils

Highly organic soils such as peat are visually classified. Partly organic soils, with a mix of organic and mineral matter, are classified visually and by Atterberg Limits tests.

Moisture Content

Moisture is visually estimated and samples are usually tested. Soil moisture capacity varies with texture.

Typical examples:
GW, moist at 3%, saturated at 9%
SP, moist at 6%, saturated at 20%.
CL, moist at 12%, saturated at 33%.

Fine- and Coarse-grained Soils

The USCS classification applies to the material smaller than the 3-inch sieve.

'Fine-Grained Soils' (silts and clays) have more than 50% passing the #200 sieve and are classified by their Atterberg Limits.

'Coarse-Grained Soils' (sands and gravels) have less than 50% passing the #200 sieve. When more than 50% of the plus-200 material is retained on the #4 sieve the general soil type is gravel, and if more than 50% is finer than the #4 sieve, it is sand.

Clean coarse-grained soils are classified as well-graded (Classes GW, SW) or poorly-graded (GP, SP.) Well-graded soils have a wider range of sizes and are typically more stable. Poorly-graded soils are usually more permeable.

Atterberg Limits

Test is performed on the clay, silt and fine sand fraction of the soil:
Liquid Limit (LL) – moisture content (%) at which soil becomes very soft.
Plastic Limit (PL) – moisture content at which soil crumbles.
Plasticity Index (PI) = LL minus PL

Higher PI values may indicate reduced permeability and increased drying shrinkage.

LL > 50 indicates soil with a higher potential to shrink and swell due to changing moisture content.

Silts have lower PI values, and behave like very fine sand; most silts also contain some clay. Behavior of clays is partly controlled by electrochemical forces and varies among the several clay minerals.

Color

Soil color sometimes indicates groundwater conditions, with subdued colors below the water table and mottled (mixed) colors in the zone of seasonal water table fluctuation. Color changes tend to be more prominent in fine-grained soils.

Relative Quantities

Estimated percentages in descriptions:

<5% - Trace
5-10% - Traces
10-25% - Little
25-35% - Some
'And' - Approx. equal amounts
'Few' - <10% (cobbles and boulders)

USDA Soil Classification

USDA classifications are based on the relative amounts of sand, silt and clay in the soil fraction passing the #10 (2mm) sieve. 'Gravelly' indicates more than 15% of #10 to 3" size. 'Channery' indicates 15 to 35% thin flat pieces up to 6" long.

REV.	DATE	BY
0	7/19/2020	KLP

UPSTATE GLASS TEMPERING

135 CROTTY ROAD, TOWN OF WALLKILL, N.Y.

SOIL BORING LOCATIONS

KEVIN L. PATTON, P.E.
36 PATTON ROAD
NEWBURGH, NY 12550
845 275-7732
PATTONGEOTECH.COM

S FROM THE ORIGINAL OF THIS DOCUMENT NOT
D WITH AN ORIGINAL OF THE PROFESSIONAL
EER'S AND/OR LAND SURVEYOR'S STAMP OR
SSED SEAL SHALL NOT BE CONSIDERED VALID,
COPIES.

HORIZED ALTERATION OR ADDITION TO THIS
MENT IS A VIOLATION OF SECTION 7209-2 OF
NEW YORK STATE EDUCATION LAW.

Dig. Safely. New York
Call 811
before you dig

APPROXIMATE SOIL BORING LOCATIONS
JULY 2, 2020

SHOWN ON A PARTIAL COPY OF 'AMENDMENT 6 SITE PLAN...' BY LANC & TULLY ENGINEERING & SURVEYING, P.C., OF GOSHEN, N.Y., DATED MARCH 27, 2018.

0 100 200
Feet

NORTH

B1 B2 B3 B4 B5

CONC. PADS
PROPOSED CONC. PAD
ELECTRIC TRANSFORMER
PROPOSED EXIT CORRIDOR
EXISTING DOOR TO BE RELOCATED TO CORRIDOR
BLRD T.B.R.
POST INDICATOR VALVE TO BE RELOCATED
SOUTH SPRINKLER SYSTEM #2, RISER#2 TO BE RELOCATED (APPROXIMATE LOCATION)
SOUTH SPRINKLER SYSTEM #1, RISER#1 TO BE RELOCATED (APPROXIMATE LOCATION)
CONC. PAD T.B.R.
CONC. T.B.R.
CONC. PILLAR
BLRD
EXISTING PAVEMENT TO BE REMOVED OR MILLED AND REPAVED
EXISTING PARKING SPACES TO BE REMOVED (8 TOTAL)
EXISTING PARKING SPACES TO BE REMOVED (4 TOTAL)
EXISTING PARKING SPACES TO BE REMOVED (11 TOTAL)
EXISTING PARKING SPACES TO BE REMOVED (10 TOTAL)
EXISTING PARKING SPACE TO BE REMOVED (1 TOTAL)
PROPOSED CONC. PAD
PROPOSED CURB
PROPOSED PAVEMENT
12 PROPOSED PARKING STALLS
10 PROPOSED PARKING STALLS
EXISTING CURB ISLANDS TO BE REMOVED
EXISTING CURB AND FENCE TO BE REMOVED (APPROX. 102 L.F.)
EXISTING CURB AND FENCE TO BE REMOVED (APPROX 152 L.F.)
PROPOSED CURB (APPROX 152 L.F.)
EXISTING HYDRANT TO BE REMOVED AND RELOCATED
PROPOSED RELOCATED HYDRANT
CONC.
WOOD TIE WALL
CONC. VAULT
SIGN
ACCESS TO CROTTY ROAD
TO CRYSTAL RUN ROAD
PROPOSED 10' WIDE OVERHEAD DOOR
EXISTING 10' WIDE OVERHEAD DOOR
LOADING RAMP
FURNACE UNIT
GAS RAIL
GUARD HOUSE 456± SF
UNIT A-11 AMENDMENT #6: UPSTATE GLASS TEMPERING, LLC 22,433± SQ.FT.
UNIT A-3 AMENDMENT #5: UPSTATE GLASS TEMPERING, LLC 7,744± SQ.FT.
UNIT A-4 AMENDMENT #5: UPSTATE GLASS TEMPERING, LLC 14,351± SQ. FT.
UNIT A-5 AMENDMENT #3: FINELINE SETTINGS, INC. WAREHOUSE 20,364± SQ. FT.
UNIT A-7 FINELINE SETTINGS 3,318± SQ. FT.
UNIT A-6 RED CROSS 7,138± SQ. FT.
UNIT A-1 RED CROSS 2,300± SQ.FT.
UNIT A-2 FINELINE SETTINGS, INC. 7,390± SQ. FT.
97.69'
218.12'
75.00'
15.00'
S77°23'10"E 323.15'
155.00'
S47°44'42"E
N40°41'05"W
S59°39'32"W 63.36'
S51°48'00"W 27.64'
N36°26'10"W 52.93'
N40°41'05"W 265.56'
S65°30'59"W 64.02'
S72°10'20"W 30.97'
S72°10'20"W 26.72'
S82°31'40"W 100.14'
S82°31'40"W 100.14'
S88°59'50"W 28.10'
311.58'

GRAPHIC SCALE
(IN FEET)
1 inch = 20 ft.

DIAGONALLY BLUE STRIPED H.C. ACCESS AND WALKWAY
14" O.C. BLUE STRIPES, 4" WIDE

PROPOSED GRADING AND UTILITIES PLAN

REV.	DATE	BY
0	7/19/2020	KLP

UPSTATE GLASS TEMPERING

135 CROTTY ROAD, TOWN OF WALLKILL, N.Y.

SUBSURFACE PROFILE

KEVIN L. PATTON, P.E.
36 PATTON ROAD
NEWBURGH, NY 12550
845 275-7732
PATTONGEOTECH.COM

GENERALIZED SUBSURFACE PROFILE

NO HORIZONTAL SCALE. THE BORINGS ARE SHOWN IN THEIR GENERAL RELATIVE LOCATIONS.

USCS SOIL CLASSIFICATIONS ARE IN BRACKETS.

IN GENERAL, RED PATTERNS INDICATE SANDY OR GRAVELLY SOILS, PURPLE PATTERNS INDICATE PREDOMINATELY FINE-GRAINED SOILS, AND ORANGE INDICATES MIXED OR INTERMEDIATE TEXTURES.

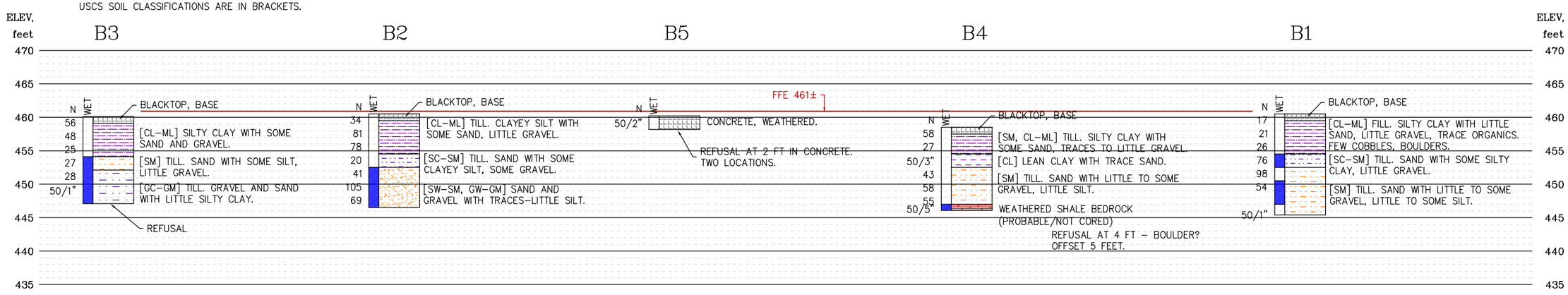

KEVIN L. PATTON, P.E.
36 PATTON ROAD
NEWBURGH, NY 12550
PATTONGEOTECH.COM 845 275-7732

CLIENT:	Upstate Glass Tempering		
PROJECT:	Building Addition		
DATE:	7/2/2020	Project No.:	20219
WEATHER:	Sunny, 85 degrees		

SOIL BORING LOG

DRILLING COMPANY:	Diamond Drilling, Port Jervis, N.Y.	LOCATION:	26ft N, 15ft W from SW corner of proposed addition.	**BORING NO.**	**B-1**
DRILLER AND HELPER:	Tony Martin, Donny				
HAMMER TYPE:	Safety, with Rope and Cathead	APPROX. ELEV.:	+/-460.5 ft		
INSPECTOR:	Wyeth Patton	WATER DEPTH:			

Feet	SAMPLE #	Type	Rec.	USCS SOIL CLASS	SPT TEST, BLOWS/6" 0-6	6-12	12-18	18-24	MOISTURE	DESCRIPTION	NOTES
0-2	**S1**	SS	12	CL-ML	7	**9**	**8**	7	Moist	Silty clay w/ little sand, tr-little gravel, trace organic	Fill to +6ft depth.
										Grey mottled brown and light grey.	PEN = 13 ksf
2-4	**S2**	SS	14	CL-ML	6	**6**	**15**	16	Moist	Silty clay with little sand, little gravel (swampy odor)	Boulder 3'
										Grey with fine brown mottling PEN=9 ksf	Grinding 3-4'
5 4-6	**S3**	SS	10	CL-ML	10	**10**	**16**	14	Moist	Silty Clay with little sand, tr-little gravel, tr organic	
										Grey, strong brown mottling. PEN=13 ksf	
6-8	**S4**	SS	6	SC-SM	46	**41**	**35**	30	Wet	Sand w/some silty clay, little gravel. Till. (Slight	
										swampy odor, no organics.) Greyish brown.	
8-10	**S5**	SS	24	SM	48	**53**	**45**	42	Moist	Sand, some gravel, little silt, shale fragments	
10										Brown and dark greyish brown. Till.	
10-12	**S6**	SS	12	SM	27	**22**	**32**	50/6	Wet	Sand with little silt, little gravel. Till.	Very slow drilling,
										Brown, PEN=7	10-15 feet
15											
15-17	**S7**	SS	1	SM	50/1				Very Moist	Sand with some silt, little gravel, shale	
										fragments. Till. Grey. Small sample.	
20											
25											
30											
35											
40											
45											

COMMENTS:

DRILLING METHOD:	HSA - Hollow-Stem Auger	MR - Mud-Rotary		MEASUREMENTS IN FEET AND INCHES
SAMPLE/TEST TYPE	SS - SPLIT SPOON	C - CORE	T - UNDISTURBED TUBE	AUG - AUGER CUTTINGS
	PEN - HAND PENETROMETER		TOR - TORVANE	V - VANE SHEAR

KEVIN L. PATTON, P.E.
36 PATTON ROAD
NEWBURGH, NY 12550
PATTONGEOTECH.COM 845 275-7732

CLIENT:	Upstate Glass Tempering		
PROJECT:	Building Addition		
DATE:	7/2/2020	Project No.:	20219
WEATHER:	Sunny, 85 degrees		

SOIL BORING LOG

DRILLING COMPANY:	Diamond Drilling, Port Jervis, N.Y.	LOCATION:	Middle of north half of proposed addition.	**BORING NO.**	**B-2**
DRILLER AND HELPER:	Tony Martin, Donny				
HAMMER TYPE:	Safety, with Rope and Cathead	APPROX. ELEV.:	+/-460.5 ft		
INSPECTOR:	Wyeth Patton	WATER DEPTH:			

Feet	SAMPLE #	Type	Rec.	USCS SOIL CLASS	SPT TEST, BLOWS/6" 0-6	6-12	12-18	18-24	MOISTURE	DESCRIPTION	NOTES
0-2	**S1**	SS	18	CL-ML	24	**27**	**17**	30	Moist	4" blacktop, 8" fine-med sand, 6" Till, silty clay	
										w/little gravel. Dark grey finely-mottled.	PEN = 15 ksf (Till)
2-4	**S2**	SS	10	CL-ML	43	**37**	**44**	48	Very Moist	Clayey silt with some sand. Till.	
										Grey mottled orange brown PEN=6 ksf	
5 4-6	**S3**	SS	18	CL-ML	17	**43**	**35**	22	Very Moist	Clayey silt with some sand, little gravel. Till.	
										Greyish brown w/grey + orange mottling PEN=7.5ksf	
6-8	**S4**	SS	12	SC-SM	22	**11**	**9**	14	VM/Wet	Sand with some clayey silt, some gravel. Till.	
										Brown. PEN=3 ksf	
8-10	**S5**	SS	12	SW-SM	27	**19**	**22**	27	Wet	Sand with little gravel, traces-little silt. Till.	
10										Brown	
10-12	**S6**	SS	20	GW-GM	30	**57**	**48**	28	Wet	Gravel with some sand, traces-little silt.	
										Hard shale fragments. Dark greyish brown	
12-14	**S7**	SS	10	GW-GM	25	**39**	**30**	54	Wet	Gravel with some sand, traces silt.	
										Grey and dark olive brown	
15											
20											
25											
30											
35											
40											
45											

COMMENTS:

DRILLING METHOD:	HSA - Hollow-Stem Auger	MR - Mud-Rotary		MEASUREMENTS IN FEET AND INCHES
SAMPLE/TEST TYPE	SS - SPLIT SPOON	C - CORE	T - UNDISTURBED TUBE	AUG - AUGER CUTTINGS
	PEN - HAND PENETROMETER		TOR - TORVANE	V - VANE SHEAR

KEVIN L. PATTON, P.E.
36 PATTON ROAD
NEWBURGH, NY 12550
PATTONGEOTECH.COM 845 275-7732

CLIENT:	Upstate Glass Tempering		
PROJECT:	Building Addition		
DATE:	7/2/2020	Project No.:	20219
WEATHER:	Sunny, 85 degrees		

SOIL BORING LOG

DRILLING COMPANY:	Diamond Drilling, Port Jervis, N.Y.	LOCATION:	18ft S from NW corner of proposed addition.	**BORING NO.**	**B-3**
DRILLER AND HELPER:	Tony Martin, Donny				
HAMMER TYPE:	Safety, with Rope and Cathead	APPROX. ELEV.:	+/-460.1 ft		
INSPECTOR:	Wyeth Patton	WATER DEPTH:			

Feet	SAMPLE #	Type	Rec.	USCS SOIL CLASS	SPT TEST, BLOWS/6" 0-6	6-12	12-18	18-24	MOISTURE	DESCRIPTION	NOTES
0-2	**S1**	SS	10	SP	29	**28**	**28**	33	Moist	2" asphalt, cemented medium sand (vigorous reaction with dilutue HCl.) Dark grey.	
2-4	**S2**	SS	10	CL-ML	15	**20**	**28**	22	Moist	Silty clay with some sand, little gravel. Till. Olive brown mottled grey PEN=15	
5 4-6	**S3**	SS	5	CL-ML	12	**10**	**15**	19	Moist	Silty clay with some sand, traces gravel. Till. Brown, orange brown, light grey PEN=4.5	
6-8	**S4**	SS	12	SM	16	**14**	**13**	14	Wet	Sand with some silt, little gravel. Till. Olive brown PEN=6	
8-10	**S5**	SS	24	GC-GM	12	**12**	**16**	67	Very Moist	Gravel and sand with little silty clay. Till.	
10									to Wet	Brown	
10-12	**S6**	SS	0		50/1					No recovery	
										Refusal at 13 feet.	
15											
20											
25											
30											
35											
40											
45											

COMMENTS:

DRILLING METHOD:	HSA - Hollow-Stem Auger	MR - Mud-Rotary		MEASUREMENTS IN FEET AND INCHES
SAMPLE/TEST TYPE	SS - SPLIT SPOON	C - CORE	T - UNDISTURBED TUBE	AUG - AUGER CUTTINGS
	PEN - HAND PENETROMETER		TOR - TORVANE	V - VANE SHEAR

KEVIN L. PATTON, P.E.
36 PATTON ROAD
NEWBURGH, NY 12550
PATTONGEOTECH.COM 845 275-7732

CLIENT:	Upstate Glass Tempering		
PROJECT:	Building Addition		
DATE:	7/2/2020	Project No.:	20219
WEATHER:	Sunny, 85 degrees		

SOIL BORING LOG

DRILLING COMPANY:	Diamond Drilling, Port Jervis, N.Y.	LOCATION:	SW corner of proposed addition.	**BORING NO.**	**B-4**
DRILLER AND HELPER:	Tony Martin, Donny				
HAMMER TYPE:	Safety, with Rope and Cathead	APPROX. ELEV.:	+/-458.5 ft		
INSPECTOR:	Wyeth Patton	WATER DEPTH:			

Feet	SAMPLE #	Type	Rec.	USCS SOIL CLASS	SPT TEST, BLOWS/6" 0-6	6-12	12-18	18-24	MOISTURE	DESCRIPTION	NOTES
0-2	**S1**	SS		SM	6	**36**	**22**	17	Moist	4" blacktop; 5" dark brown sand; Till: Sand w/some silt, little gravel. Brown mottled grey.	
2-4	**S2**	SS		CL-ML	23	**14**	**13**	14	Moist	Silty clay with some sand, traces gravel. Till. Grey, slight brown mottling PEN=12 ksf	Refusal 4',
5 4-6	**S3**	SS		CL	50/3				Very Moist	Lean Clay with trace sand. Faintly layered. Grey and dark grey. PEN=5 ksf	Offset 5' toward building
6-8	**S4**	SS	20	SM	20	**17**	**26**	41	Very Moist	Sand with some gravel, little silt. Till. Brown, light grey, orange brown PEN=18	
8-10	**S5**	SS	24	SM	26	**29**	**29**	37	Moist	Sand with little silt, little gravel. Till. Brown, PEN=14	
10-12	**S6**	SS	18	SM	35	**33**	**22**	52	Very Moist	Sand with little silt, little gravel, shale fragments. Till. Brown. PEN=15 ksf	
12-14	**S7**	SS	5	GM	50/5				Wet	Weathered shale. Probable bedrock. Gravel- and sand-size shale fragments with thin seams of sandy silt. Dark grey.	
15											
20											
25											
30											
35											
40											
45											

COMMENTS:

DRILLING METHOD:	HSA - Hollow-Stem Auger	MR - Mud-Rotary		MEASUREMENTS IN FEET AND INCHES
SAMPLE/TEST TYPE	SS - SPLIT SPOON	C - CORE	T - UNDISTURBED TUBE	AUG - AUGER CUTTINGS
	PEN - HAND PENETROMETER		TOR - TORVANE	V - VANE SHEAR

KEVIN L. PATTON, P.E.
36 PATTON ROAD
NEWBURGH, NY 12550
PATTONGEOTECH.COM 845 275-7732

CLIENT:	Upstate Glass Tempering		
PROJECT:	Building Addition		
DATE:	7/2/2020	Project No.:	20219
WEATHER:	Sunny, 85 degrees		

SOIL BORING LOG

DRILLING COMPANY:	Diamond Drilling, Port Jervis, N.Y.	LOCATION:	Middle of south half of proposed addition.	**BORING NO.**	**B-5**
DRILLER AND HELPER:	Tony Martin, Donny				
HAMMER TYPE:	Safety, with Rope and Cathead	APPROX. ELEV.:	+/-460.2 ft		
INSPECTOR:	Wyeth Patton	WATER DEPTH:			

Feet	SAMPLE #	SAMPLE Type	SAMPLE Rec.	USCS SOIL CLASS	SPT TEST, BLOWS/6" 0-6	6-12	12-18	18-24	MOISTURE	DESCRIPTION	NOTES
0-2	**S1**	SS		---	34	**50/2**			Slightly	Weathered concrete.	
									Moist	Refusal at 2 feet, in concrete	
										Offset 5' without change	
5											
10											
15											
20											
25											
30											
35											
40											
45											

COMMENTS:

DRILLING METHOD:	HSA - Hollow-Stem Auger	MR - Mud-Rotary		MEASUREMENTS IN FEET AND INCHES
SAMPLE/TEST TYPE	SS - SPLIT SPOON	C - CORE	T - UNDISTURBED TUBE	AUG - AUGER CUTTINGS
	PEN - HAND PENETROMETER		TOR - TORVANE	V - VANE SHEAR

KEVIN L. PATTON, P.E.
36 PATTON ROAD
NEWBURGH, NY 12550
845 275-7732 PATTONGEOTECH.COM

CLIENT:	Upstate Glass Tempering		
PROJECT:	Building Addition		
PROJECT No.:	20219	SAMPLE LOT No.:	200702-1
DATE SAMPLED:	7/2/2020	DATE TESTED:	7/7/2020
SAMPLED BY:	Wyeth Patton	TESTED BY:	Wyeth Patton

MOISTURE CONTENT OF SOIL

TEST METHOD: ASTM D2216

SAMPLE NO.	DEPTH,FT.	% MOISTURE
B1 S1	1	16.9
B1 S2	3	15.5
B1 S3	5	15.8
B1 S4	7	16.2
B1 S5	9	8.5
B1 S6	11	11.5
B2 S1	1	10.1
B2 S2	3	16.9
B2 S3	5	11.7
B2 S4	7	11.2
B2 S5	9	11.8
B2 S6	11	9.0
B2 S7	13	9.6
B3 S1	1	16.1
B3 S2	3	12.6
B3 S3	5	17.6
B3 S4	7	10.6
B3 S5	9	9.7
B4 S1	1	10.9
B4 S2	3	11.5
B4 S3	5	24.8
B4 S4	7	10.5
B4 S5	9	10.6
B4 S6	11	11.8
B4 S7	13	13.8

Moisture content is expressed as a percent of the dry mass of the soil.

Reviewed by: *Kevin Patton*

Form NMC

KEVIN L. PATTON, P.E.

36 PATTON ROAD

NEWBURGH, NY 12550

845 275-7732 PATTONGEOTECH.COM

CLIENT:	Upstate Glass Tempering		
PROJECT:	Building Addition		
PROJECT No.:	20219	SAMPLE LOT No.:	200702-1
DATE SAMPLED:	7/2/2020	DATE TESTED:	7/6/2020
SAMPLED BY:	Wyeth Patton	TESTED BY:	Wyeth Patton

SIEVE-AND-HYDROMETER ANALYSIS TEST REPORT

TEST METHOD(s): ASTM D422, AASHTO T88

Sample Location	B2-S4
Depth	7 feet

Sieve Size		Percent Retained	Percent Passing	Specification
inches	mm			
1-1/2"	37.5	0	100	
3/4"	19.0	3	97	
3/8"	9.5	15	82	
#4	4.75	9	73	
#10	2.00	11	62	
#18	1.00	5	57	
#40	0.425	9	48	
#100	0.150	8	40	
#200	0.075	5	35	
Hydrometer Analysis	0.050	3	32	
	0.020	7	25	
	0.010	6	19	
	0.005	6	13	
	0.002	7	6	
	0.001	2	4	

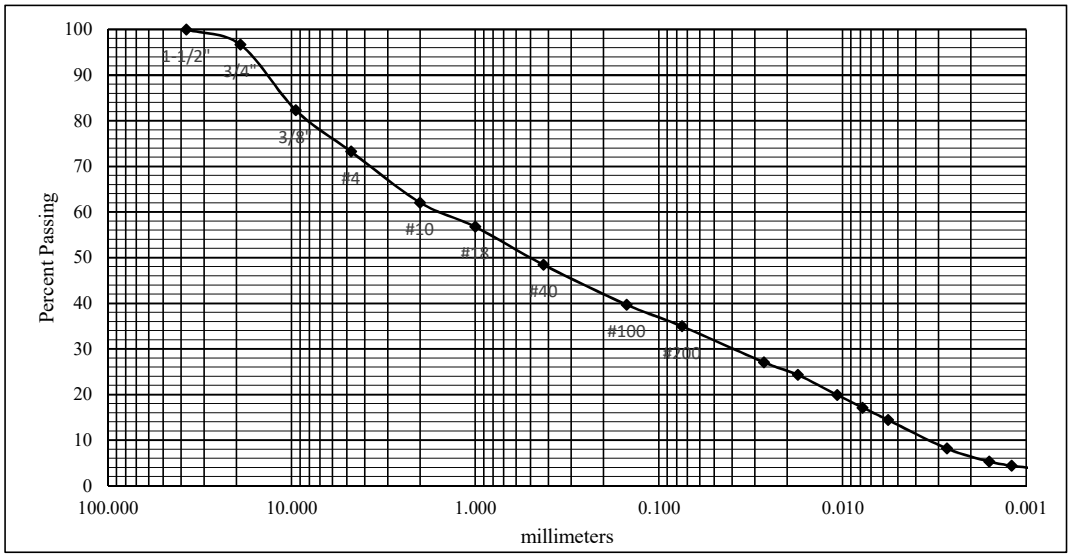

USDA Particle Size Classification:		**USDA Textural Class:** Very gravelly sandy loam
Gravel, 2.00mm to 3"	38	
Sand, 2.00 to 0.050mm:	30	**USCS Classification (ASTM D2487/D2488):**
Silt, 0.050 to 0.002mm:	26	SC-SM, Silty Clayey Sand with Gravel
Clay, <0.002mm	6	
Total	100	Atterberg Limits were determined by: Test

Reviewed by: *Kevin Patton*

Form HYD

KEVIN L. PATTON, P.E.
36 PATTON ROAD
NEWBURGH, NY 12550
845 275-7732 PATTONGEOTECH.COM

CLIENT:	Upstate Glass Tempering		
PROJECT:	Building Addition		
PROJECT No.:	20219	SAMPLE LOT No.:	200702-1
DATE SAMPLED:	7/2/2020	DATE TESTED:	7/6/2020
SAMPLED BY:	Wyeth Patton	TESTED BY:	Wyeth Patton

SIEVE-AND-HYDROMETER ANALYSIS TEST REPORT

TEST METHOD(s): ASTM D422, AASHTO T88

Sample Location	B3-S5
Depth	9 feet

Sieve Size		Percent Retained	Percent Passing	Specification
inches	mm			
1-1/2"	37.5	0	100	
3/4"	19.0	10	90	
3/8"	9.5	14	76	
#4	4.75	12	64	
#10	2.00	13	51	
#18	1.00	5	46	
#40	0.425	7	39	
#100	0.150	8	31	
#200	0.075	4	27	
Hydrometer Analysis	0.050	3	24	
	0.020	7	17	
	0.010	3	14	
	0.005	4	10	
	0.002	5	5	
	0.001	2	3	

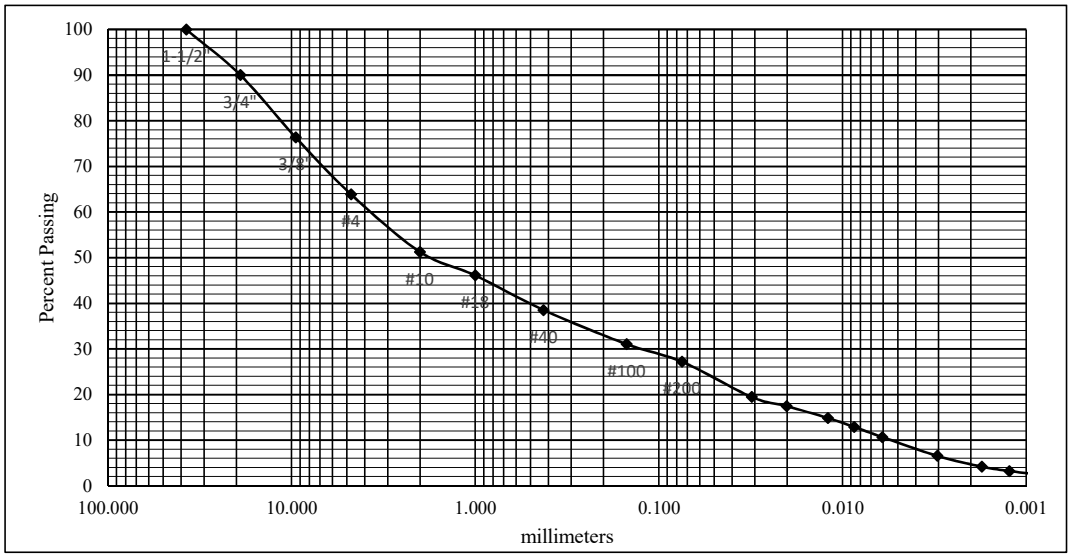

USDA Particle Size Classification:		**USDA Textural Class:** Very gravelly sandy loam
Gravel, 2.00mm to 3"	49	
Sand, 2.00 to 0.050mm:	27	**USCS Classification (ASTM D2487/D2488):**
Silt, 0.050 to 0.002mm:	19	SC-SM, Silty Clayey Sand with Gravel
Clay, <0.002mm	5	
Total	100	Atterberg Limits were determined by: Test

Reviewed by: *Kevin Patton*

Form HYD

KEVIN L. PATTON, P.E.
36 PATTON ROAD
NEWBURGH, NY 12550
845 275-7732 PATTONGEOTECH.COM

CLIENT:	Upstate Glass Tempering		
PROJECT:	Building Addition		
PROJECT No.:	20219	SAMPLE LOT No.:	200702-1
DATE SAMPLED:	7/2/2020	DATE TESTED:	7/8/2020
SAMPLED BY:	Wyeth Patton	TESTED BY:	Wyeth Patton

ATTERBERG LIMITS TEST

TEST METHODS: ASTM D4318/ AASHTO T89, T90

Sample Location	B2-S4
Depth	7 feet
Percent Passing #40	48
Liquid Limit (LL)	**18**
Plastic Limit (PL)	**13**
Plasticity Index (PI)	**5**
USCS Class of -#40	CL-ML

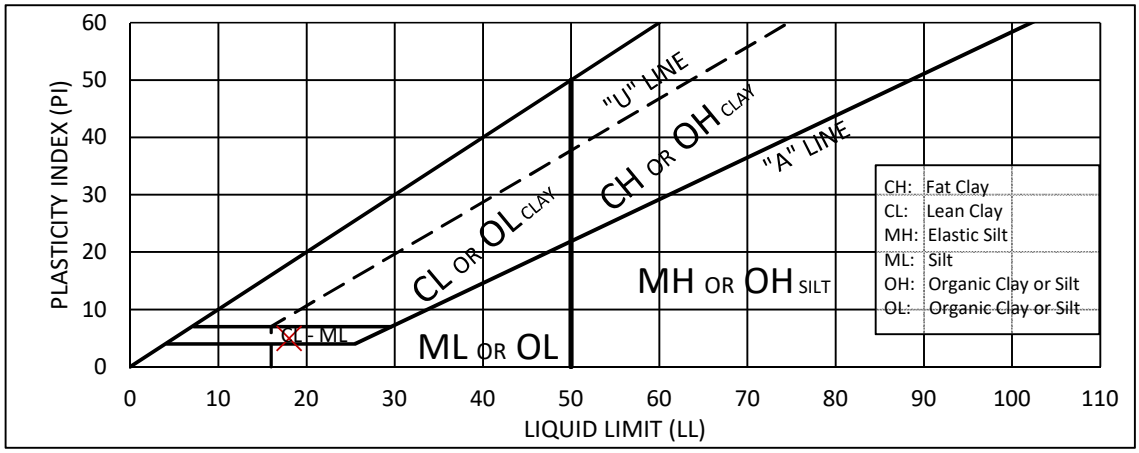

LL, PL and PI values are percent moisture of the soil by dry mass.

Test is performed on the 'matrix' fraction of the soil, finer than the #40 (0.425mm) sieve.

The Liquid Limit is the moisture content at which the matrix fraction of the soil changes from a stiff to a flowing consistency. The plastic limit is the moisture content at which it changes from cohesive to crumbly. The Plasticity Index is the Liquid Limit minus the Plastic Limit.

Reviewed by: *Kevin Patton*

Form ABL

KEVIN L. PATTON, P.E.
36 PATTON ROAD
NEWBURGH, NY 12550
845 275-7732 PATTONGEOTECH.COM

CLIENT:	Upstate Glass Tempering		
PROJECT:	Building Addition		
PROJECT No.:	20219	SAMPLE LOT No.:	200702-1
DATE SAMPLED:	7/2/2020	DATE TESTED:	7/8/2020
SAMPLED BY:	Wyeth Patton	TESTED BY:	Wyeth Patton

ATTERBERG LIMITS TEST

TEST METHODS: ASTM D4318/ AASHTO T89, T90

Sample Location	B3-S5
Depth	9 feet
Percent Passing #40	39
Liquid Limit (LL)	**19**
Plastic Limit (PL)	**14**
Plasticity Index (PI)	**5**
USCS Class of -#40	CL-ML

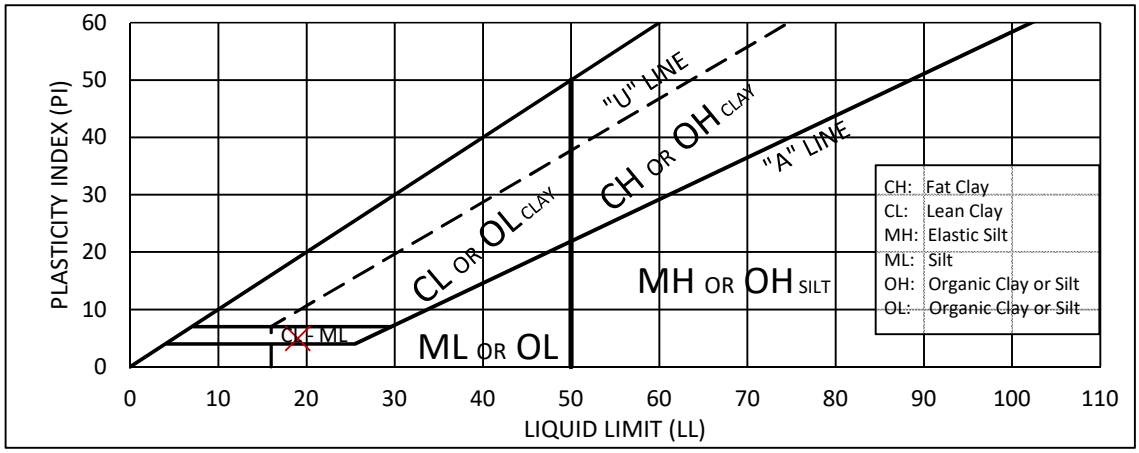

LL, PL and PI values are percent moisture of the soil by dry mass.

Test is performed on the 'matrix' fraction of the soil, finer than the #40 (0.425mm) sieve.

The Liquid Limit is the moisture content at which the matrix fraction of the soil changes from a stiff to a flowing consistency. The plastic limit is the moisture content at which it changes from cohesive to crumbly. The Plasticity Index is the Liquid Limit minus the Plastic Limit.

Reviewed by: *Kevin Patton*

Form ABL

Map Scale: 1:10,300 if printed on A landscape (11" x 8.5") sheet.

N

Meters: 0 150 300 600 900

Feet: 0 500 1000 2000 3000

Map projection: Web Mercator Corner coordinates: WGS84 Edge tics: UTM Zone 18N WGS84

MAP LEGEND

Area of Interest (AOI)

Area of Interest (AOI)

Soils

Soil Map Unit Polygons

Soil Map Unit Lines

Soil Map Unit Points

Special Point Features

Blowout

Borrow Pit

Clay Spot

Closed Depression

Gravel Pit

Gravelly Spot

Landfill

Lava Flow

Marsh or swamp

Mine or Quarry

Miscellaneous Water

Perennial Water

Rock Outcrop

Saline Spot

Sandy Spot

Severely Eroded Spot

Sinkhole

Slide or Slip

Sodic Spot

Spoil Area

Stony Spot

Very Stony Spot

Wet Spot

Other

Special Line Features

Water Features

Streams and Canals

Transportation

Rails

Interstate Highways

US Routes

Major Roads

Local Roads

Background

Aerial Photography

MAP INFORMATION

The soil surveys that comprise your AOI were mapped at 1:15,800.

Please rely on the bar scale on each map sheet for map measurements.

Source of Map: Natural Resources Conservation Service
Web Soil Survey URL:
Coordinate System: Web Mercator (EPSG:3857)

Maps from the Web Soil Survey are based on the Web Mercator projection, which preserves direction and shape but distorts distance and area. A projection that preserves area, such as the Albers equal-area conic projection, should be used if more accurate calculations of distance or area are required.

This product is generated from the USDA-NRCS certified data as of the version date(s) listed below.

Soil Survey Area: Orange County, New York
Survey Area Data: Version 20, Sep 16, 2019

Soil map units are labeled (as space allows) for map scales 1:50,000 or larger.

Date(s) aerial images were photographed: Oct 7, 2013—Feb 26, 2017

The orthophoto or other base map on which the soil lines were compiled and digitized probably differs from the background imagery displayed on these maps. As a result, some minor shifting of map unit boundaries may be evident.

Map Unit Legend

Map Unit Symbol	Map Unit Name	Acres in AOI	Percent of AOI
Ab	Alden silt loam	17.4	3.5%
AC	Alden extremely stony soils	14.3	2.9%
BnB	Bath-Nassau channery silt loams, 3 to 8 percent slopes	5.8	1.2%
Ca	Canandaigua silt loam	35.1	7.1%
CnB	Chenango gravelly silt loam, 3 to 8 percent slopes	7.5	1.5%
CnC	Chenango gravelly silt loam, 8 to 15 percent slopes	0.6	0.1%
ErA	Erie gravelly silt loam, 0 to 3 percent slopes	18.6	3.7%
ErB	Erie gravelly silt loam, 3 to 8 percent slopes	108.8	21.9%
HoC	Hoosic gravelly sandy loam, 8 to 15 percent slopes	10.6	2.1%
MdB	Mardin gravelly silt loam, 3 to 8 percent slopes	189.2	38.1%
MdC	Mardin gravelly silt loam, 8 to 15 percent slopes	16.9	3.4%
Pg	Pits, gravel	6.7	1.4%
RhB	Riverhead sandy loam, 3 to 8 percent slopes	2.2	0.4%
RhC	Riverhead sandy loam, 8 to 15 percent slopes	1.1	0.2%
SXC	Swartswood and Mardin soils, sloping, very stony	15.6	3.1%
UH	Udorthents, smoothed	37.7	7.6%
Wd	Wayland soils complex, non-calcareous substratum, 0 to 3 percent slopes, frequently flooded	8.9	1.8%
Totals for Area of Interest		**497.1**	**100.0%**

Engineering Properties

This table gives the engineering classifications and the range of engineering properties for the layers of each soil in the survey area.

Hydrologic soil group is a group of soils having similar runoff potential under similar storm and cover conditions. The criteria for determining Hydrologic soil group is found in the National Engineering Handbook, Chapter 7 issued May 2007(http://directives.sc.egov.usda.gov/OpenNonWebContent.aspx?content=17757.wba). Listing HSGs by soil map unit component and not by soil series is a new concept for the engineers. Past engineering references contained lists of HSGs by soil series. Soil series are continually being defined and redefined, and the list of soil series names changes so frequently as to make the task of maintaining a single national list virtually impossible. Therefore, the criteria is now used to calculate the HSG using the component soil properties and no such national series lists will be maintained. All such references are obsolete and their use should be discontinued. Soil properties that influence runoff potential are those that influence the minimum rate of infiltration for a bare soil after prolonged wetting and when not frozen. These properties are depth to a seasonal high water table, saturated hydraulic conductivity after prolonged wetting, and depth to a layer with a very slow water transmission rate. Changes in soil properties caused by land management or climate changes also cause the hydrologic soil group to change. The influence of ground cover is treated independently. There are four hydrologic soil groups, A, B, C, and D, and three dual groups, A/D, B/D, and C/D. In the dual groups, the first letter is for drained areas and the second letter is for undrained areas.

The four hydrologic soil groups are described in the following paragraphs:

Group A. Soils having a high infiltration rate (low runoff potential) when thoroughly wet. These consist mainly of deep, well drained to excessively drained sands or gravelly sands. These soils have a high rate of water transmission.

Group B. Soils having a moderate infiltration rate when thoroughly wet. These consist chiefly of moderately deep or deep, moderately well drained or well drained soils that have moderately fine texture to moderately coarse texture. These soils have a moderate rate of water transmission.

Group C. Soils having a slow infiltration rate when thoroughly wet. These consist chiefly of soils having a layer that impedes the downward movement of water or soils of moderately fine texture or fine texture. These soils have a slow rate of water transmission.

Group D. Soils having a very slow infiltration rate (high runoff potential) when thoroughly wet. These consist chiefly of clays that have a high shrink-swell potential, soils that have a high water table, soils that have a claypan or clay layer at or near the surface, and soils that are shallow over nearly impervious material. These soils have a very slow rate of water transmission.

Depth to the upper and lower boundaries of each layer is indicated.

Texture is given in the standard terms used by the U.S. Department of Agriculture. These terms are defined according to percentages of sand, silt, and clay in the fraction of the soil that is less than 2 millimeters in diameter. "Loam," for example, is soil that is 7 to 27 percent clay, 28 to 50 percent silt, and less than 52 percent sand. If the content of particles coarser than sand is 15 percent or more, an appropriate modifier is added, for example, "gravelly."

Classification of the soils is determined according to the Unified soil classification system (ASTM, 2005) and the system adopted by the American Association of State Highway and Transportation Officials (AASHTO, 2004).

The Unified system classifies soils according to properties that affect their use as construction material. Soils are classified according to particle-size distribution of the fraction less than 3 inches in diameter and according to plasticity index, liquid limit, and organic matter content. Sandy and gravelly soils are identified as GW, GP, GM, GC, SW, SP, SM, and SC; silty and clayey soils as ML, CL, OL, MH, CH, and OH; and highly organic soils as PT. Soils exhibiting engineering properties of two groups can have a dual classification, for example, CL-ML.

The AASHTO system classifies soils according to those properties that affect roadway construction and maintenance. In this system, the fraction of a mineral soil that is less than 3 inches in diameter is classified in one of seven groups from A-1 through A-7 on the basis of particle-size distribution, liquid limit, and plasticity index. Soils in group A-1 are coarse grained and low in content of fines (silt and clay). At the other extreme, soils in group A-7 are fine grained. Highly organic soils are classified in group A-8 on the basis of visual inspection.

If laboratory data are available, the A-1, A-2, and A-7 groups are further classified as A-1-a, A-1-b, A-2-4, A-2-5, A-2-6, A-2-7, A-7-5, or A-7-6. As an additional refinement, the suitability of a soil as subgrade material can be indicated by a group index number. Group index numbers range from 0 for the best subgrade material to 20 or higher for the poorest.

Percentage of rock fragments larger than 10 inches in diameter and 3 to 10 inches in diameter are indicated as a percentage of the total soil on a dry-weight basis. The percentages are estimates determined mainly by converting volume percentage in the field to weight percentage. Three values are provided to identify the expected Low (L), Representative Value (R), and High (H).

Percentage (of soil particles) passing designated sieves is the percentage of the soil fraction less than 3 inches in diameter based on an ovendry weight. The sieves, numbers 4, 10, 40, and 200 (USA Standard Series), have openings of 4.76, 2.00, 0.420, and 0.074 millimeters, respectively. Estimates are based on laboratory tests of soils sampled in the survey area and in nearby areas and on estimates made in the field. Three values are provided to identify the expected Low (L), Representative Value (R), and High (H).

Liquid limit and *plasticity index* (Atterberg limits) indicate the plasticity characteristics of a soil. The estimates are based on test data from the survey area or from nearby areas and on field examination. Three values are provided to identify the expected Low (L), Representative Value (R), and High (H).

References:

American Association of State Highway and Transportation Officials (AASHTO). 2004. Standard specifications for transportation materials and methods of sampling and testing. 24th edition.

American Society for Testing and Materials (ASTM). 2005. Standard classification of soils for engineering purposes. ASTM Standard D2487-00.

Report—Engineering Properties

Absence of an entry indicates that the data were not estimated. The asterisk '*' denotes the representative texture; other possible textures follow the dash. The criteria for determining the hydrologic soil group for individual soil components is found in the National Engineering Handbook, Chapter 7 issued May 2007(http://directives.sc.egov.usda.gov/OpenNonWebContent.aspx?content=17757.wba). Three values are provided to identify the expected Low (L), Representative Value (R), and High (H).

Engineering Properties–Orange County, New York														
Map unit symbol and soil name	Pct. of map unit	Hydrologic group	Depth	USDA texture	Classification		Pct Fragments		Percentage passing sieve number—				Liquid limit	Plasticity index
					Unified	AASHTO	>10 inches	3-10 inches	4	10	40	200		
			In				*L-R-H*	*L-R-H*	*L-R-H*	*L-R-H*	*L-R-H*	*L-R-H*	*L-R-H*	*L-R-H*
Ab—Alden silt loam														
Alden	80	C/D	0-9	Silt loam	ML, OL	A-5, A-7	0- 0- 0	0- 0- 0	85-95-100	75-92-100	60-85-100	35-70-85	40-45-50	5-10-15
			9-36	Silt loam, silty clay loam, very fine sandy loam	CL, CL-ML	A-4, A-6	0- 0- 1	0- 0- 3	85-90-100	75-85-100	60-75-95	35-60-90	20-28-35	5-10-15
			36-60	Gravelly fine sandy loam, loam, silty clay loam	CL, CL-ML, GC, SC	A-2, A-4, A-6	0- 0- 3	0- 2- 5	65-80-95	50-70-92	35-55-90	20-35-85	20-28-35	5-10-15
Ca—Canandaigua silt loam														
Canandaigua	75	B/D	0-8	Silt loam	CL, ML, OL	A-6, A-7	0- 0- 0	0- 0- 0	95-100-100	92-100-100	80-95-100	65-80-95	35-40-45	10-15-20
			8-35	Silt loam, silty clay loam	CL, CL-ML	A-4, A-6	0- 0- 0	0- 0- 0	95-100-100	92-100-100	80-95-100	65-80-95	20-30-40	5-13-20
			35-60	Stratified very gravelly sand to loamy fine sand, fine sand	SW-SM, SM, SP, SW	A-1, A-2, A-3	0- 0- 0	0- 0- 5	65-100-100	50-100-100	25-70-80	2-25- 35	—	NP

Engineering Properties–Orange County, New York														
Map unit symbol and soil name	Pct. of map unit	Hydrologic group	Depth	USDA texture	Classification		Pct Fragments		Percentage passing sieve number—				Liquid limit	Plasticity index
					Unified	AASHTO	>10 inches	3-10 inches	4	10	40	200		
			In				*L-R-H*	*L-R-H*	*L-R-H*	*L-R-H*	*L-R-H*	*L-R-H*	*L-R-H*	*L-R-H*
ErB—Erie gravelly silt loam, 3 to 8 percent slopes														
Erie	80	D	0-9	Gravelly silt loam	GM, ML, SM	A-2, A-4	0- 0- 0	0- 2- 5	65-85-90	50-75-75	35-65-70	20-60-65	30-35-40	5-8 -10
			9-18	Channery fine sandy loam, channery silt loam, channery loam	CL, CL-ML, GC, SC	A-1, A-2, A-4	0- 0- 2	0- 2- 10	65-85-90	50-75-75	35-65-70	20-55-65	15-20-25	5-8 -10
			18-54	Channery silt loam, channery silty clay loam, very channery loam	CL, GC, SC	A-2, A-6, A-4	0- 2- 5	0- 2- 20	50-80-85	35-70-70	25-65-70	20-55-65	25-30-35	10-13-15
			54-70	Channery silt loam, channery silty clay loam, very channery loam	CL, GC, SC	A-2, A-6	0- 2- 5	0- 2- 25	50-80-85	35-70-70	25-65-70	20-55-65	25-30-35	10-13-15

Engineering Properties–Orange County, New York														
Map unit symbol and soil name	Pct. of map unit	Hydrologic group	Depth	USDA texture	Classification		Pct Fragments		Percentage passing sieve number—				Liquid limit	Plasticity index
					Unified	AASHTO	>10 inches	3-10 inches	4	10	40	200		
			In				*L-R-H*	*L-R-H*	*L-R-H*	*L-R-H*	*L-R-H*	*L-R-H*	*L-R-H*	*L-R-H*
MdB—Mardin gravelly silt loam, 3 to 8 percent slopes														
Mardin	85	D	0-8	Silt loam, gravelly silt loam, channery silt loam, channery loam	GC-GM, ML, MH	A-4, A-7-5, A-2-4	0- 0- 3	0- 4- 19	43-70-90	41-68-90	33-62-89	28-54-82	27-35-56	6-9 -16
			8-15	Flaggy silt loam, channery loam, silt loam, loam, channery silt loam, gravelly silt loam, gravelly loam	GC-GM, CL	A-4, A-6, A-2-4	0- 0- 3	0- 4- 18	44-71-91	41-69-90	34-61-88	28-54-81	22-27-38	6-9 -15
			15-20	Channery loam, silt loam, loam, channery silt loam, gravelly silt loam, gravelly loam	CL-ML, GM, CL	A-6, A-4, A-2-4	0- 0- 3	0- 4- 18	46-72-91	43-71-91	34-63-88	26-51-77	17-23-32	2-7 -12
			20-72	Very flaggy silt loam, very flaggy loam, very channery loam, very channery silt loam, channery loam, channery silt loam, gravelly loam, gravelly silt loam	GM, CL	A-6, A-1-b	0- 3- 17	3- 6- 40	33-74-82	30-73-81	23-63-80	18-55-73	16-28-35	2-12-17

Engineering Properties–Orange County, New York														
Map unit symbol and soil name	Pct. of map unit	Hydrologic group	Depth	USDA texture	Classification		Pct Fragments		Percentage passing sieve number—				Liquid limit	Plasticity index
					Unified	AASHTO	>10 inches	3-10 inches	4	10	40	200		
			In				*L-R-H*	*L-R-H*	*L-R-H*	*L-R-H*	*L-R-H*	*L-R-H*	*L-R-H*	*L-R-H*
UH—Udorthents, smoothed														
Udorthents	75	A	0-4	Channery loam	CL, GC, ML, SM	A-2, A-4, A-6	0- 0- 0	0- 5- 10	60-70-80	55-65-75	35-55-75	20-45-70	15-30-45	NP-8-15
			4-70	Very gravelly sandy loam, channery loam, silty clay loam	CL, GM, ML, SC	A-1, A-2, A-4, A-6	0- 0- 0	0- 5- 10	35-68-100	30-65-100	20-40-100	10-25-95	15-30-45	NP-8-15

Engineering Properties–Orange County, New York														
Map unit symbol and soil name	Pct. of map unit	Hydrologic group	Depth	USDA texture	Classification		Pct Fragments		Percentage passing sieve number—				Liquid limit	Plasticity index
					Unified	AASHTO	>10 inches	3-10 inches	4	10	40	200		
			In				*L-R-H*	*L-R-H*	*L-R-H*	*L-R-H*	*L-R-H*	*L-R-H*	*L-R-H*	*L-R-H*
Wd—Wayland soils complex, non-calcareous substratum, 0 to 3 percent slopes, frequently flooded														
Wayland	60	B/D	0-9	Mucky silt loam, silt loam, silty clay loam	ML, OH, MH	A-7-5, A-4	0- 0- 0	0- 0- 0	94-100-100	89-100-100	79-99-100	74-94-100	31-51-72	7-14-21
			9-21	Silt loam, silty clay loam	CL, MH	A-6, A-7-5	0- 0- 0	0- 0- 0	95-100-100	91-100-100	83-99-100	77-93-100	27-39-58	9-15-24
			21-28	Silt loam, silty clay loam	MH, CL	A-6, A-7-5	0- 0- 0	0- 0- 0	95-100-100	91-100-100	82-99-100	75-91-100	26-36-54	9-14-24
			28-47	Silt loam, silty clay loam	CL, CH	A-6, A-7-6	0- 0- 0	0- 0- 0	96-100-100	91-100-100	84-99-100	77-91-100	29-37-50	12-17-24
			47-54	Silt loam, silty clay loam, fine sandy loam, gravelly loam, clay loam	CL, GM, CH	A-6, A-7-6, A-4	0- 0- 0	0- 0- 7	58-100-100	58-100-100	45-99-100	38-88-100	16-36-51	2-17-28

Engineering Properties–Orange County, New York														
Map unit symbol and soil name	Pct. of map unit	Hydrologic group	Depth	USDA texture	Classification		Pct Fragments		Percentage passing sieve number—				Liquid limit	Plasticity index
					Unified	AASHTO	>10 inches	3-10 inches	4	10	40	200		
			In				*L-R-H*	*L-R-H*	*L-R-H*	*L-R-H*	*L-R-H*	*L-R-H*	*L-R-H*	*L-R-H*
			54-60	Silt loam, silty clay loam, gravelly loam, fine sandy loam, clay loam	CL, GM, CH	A-6, A-7-6, A-4	0- 0- 0	0- 0- 7	58-100-100	58-100-100	46-99-100	39-88-100	16-36-51	2-17-28
Wayland, very poorly drained	30	B/D	0-9	Silt loam, mucky silt loam, silty clay loam	OH, OL	A-7-5, A-5	0- 0- 0	0- 0- 0	93-100-100	87-100-100	77-99-100	73-94-100	44-63-82	7-14-21
			9-21	Silt loam, silty clay loam	CL, MH	A-7-5, A-6	0- 0- 0	0- 0- 0	95-100-100	91-100-100	83-99-100	77-93-100	27-39-58	9-15-24
			21-28	Silt loam, silty clay loam	MH, CL	A-6, A-7-5	0- 0- 0	0- 0- 0	95-100-100	91-100-100	82-99-100	75-91-100	26-36-54	9-14-24
			28-47	Silt loam, silty clay loam	CH, CL	A-6, A-7-6	0- 0- 0	0- 0- 0	96-100-100	91-100-100	84-99-100	77-91-100	29-37-50	12-17-24
			47-54	Silt loam, silty clay loam, fine sandy loam, gravelly loam, clay loam	CL, GM, CH	A-6, A-7-6, A-4	0- 0- 0	0- 0- 7	58-100-100	58-100-100	45-99-100	38-88-100	16-36-51	2-17-28
			54-60	Silt loam, silty clay loam, fine sandy loam, gravelly loam, clay loam	CL, GM, CH	A-6, A-7-6, A-4	0- 0- 0	0- 0- 7	58-100-100	58-100-100	46-99-100	39-88-100	16-36-51	2-17-28

Data Source Information

Soil Survey Area: Orange County, New York
Survey Area Data: Version 20, Sep 16, 2019

Appendix F Fill Import Request Forms and Documentation

NEW YORK STATE
DEPARTMENT OF ENVIRONMENTAL CONSERVATION

Request to Import/Reuse Fill or Soil

This form is based on the information required by DER-10, Section 5.4(e) and 6NYCRR Part 360.13. Use of this form is not a substitute for reading the applicable regulations and Technical Guidance document.

SECTION 1 – SITE BACKGROUND

The allowable site use is: Commercial or Industrial Use

Have Ecological Resources been identified? no

Is this soil originating from the site? no

How many cubic yards of soil will be imported/reused? >1000

If greater than 1000 cubic yards will be imported, enter volume to be imported: ~1325

SECTION 2 – MATERIAL OTHER THAN SOIL

Is the material to be imported gravel, rock or stone? yes

Does it contain less than 10%, by weight, material that passes a size 100 sieve? yes

Is this virgin material from a permitted mine or quarry? yes

Is this material recycled concrete or brick from a DEC registered processing facility? no

SECTION 3 - SAMPLING

Provide a brief description of the number and type of samples collected in the space below:

Virgin quarry stone from the former E. Tetz & Sons Inc. (Facility DEC ID 3-3322-0003/00004, Site # 7831) was imported. The imported material was a mixture of Chester ¾ & 3/8 #57 stone. Sieve analysis performed and attached.

Example Text: 5 discrete samples were collected and analyzed for VOCs. 2 composite samples were collected and analyzed for SVOCs, Inorganics & PCBs/Pesticides.

If the material meets requirements of DER-10 section 5.4(e)5 (other material), no chemical testing needed.

SECTION 3 CONT'D - SAMPLING

Provide a brief written summary of the sampling results or attach evaluation tables (compare to DER-10, Appendix 5):

Example Text: Arsenic was detected up to 17 ppm in 1 (of 5) samples; the allowable level is 16 ppm.

If Ecological Resources have been identified use the "If Ecological Resources are Present" column in Appendix 5.

SECTION 4 – SOURCE OF FILL

Name of person providing fill and relationship to the source:

Directly purchased from facility

Location where fill was obtained:

E Tetz and Sons, Middletown NY (offsite fill material)

Identification of any state or local approvals as a fill source:

NYSDOT Stonefill Facility #7831, Mining Permit DEC ID 3-3322-0003 7 / 00004

If no approvals are available, provide a brief history of the use of the property that is the fill source:

Offsite fill brought in to supplement onsite fill to bring slab up to grade.

Provide a list of supporting documentation included with this request:

The information provided on this form is accurate and complete.

Signature

7/29/26
Date

Jacob Mayer
Print Name

Crotty Road LLC
Firm

NEW YORK STATE
DEPARTMENT OF ENVIRONMENTAL CONSERVATION

Request to Import/Reuse Fill or Soil

This form is based on the information required by DER-10, Section 5.4(e) and 6NYCRR Part 360.13. Use of this form is not a substitute for reading the applicable regulations and Technical Guidance document.

SECTION 1 – SITE BACKGROUND

The allowable site use is: Commercial or Industrial Use

Have Ecological Resources been identified? no

Is this soil originating from the site? yes

How many cubic yards of soil will be imported/reused? 100-200

If greater than 1000 cubic yards will be imported, enter volume to be imported:

SECTION 2 – MATERIAL OTHER THAN SOIL

Is the material to be imported gravel, rock or stone? Choose an item

Does it contain less than 10%, by weight, material that passes a size 100 sieve? Choose an item

Is this virgin material from a permitted mine or quarry? Choose an item

Is this material recycled concrete or brick from a DEC registered processing facility? Choose an item

SECTION 3 - SAMPLING

Provide a brief description of the number and type of samples collected in the space below:

Material was generated with the excavation of footings for an addition to building completed in 2020. 450 foot length of footings generated approximately 150 cubic yards or material which was re-used within the proposed addition area as back fill to be topped with virgin quarry material to grade. No soils left the Site.

Example Text: 5 discrete samples were collected and analyzed for VOCs. 2 composite samples were collected and analyzed for SVOCs, Inorganics & PCBs/Pesticides.

If the material meets requirements of DER-10 section 5.4(e)5 (other material), no chemical testing needed.

SECTION 3 CONT'D - SAMPLING

Provide a brief written summary of the sampling results or attach evaluation tables (compare to DER-10, Appendix 5):

N/A

Example Text: Arsenic was detected up to 17 ppm in 1 (of 5) samples; the allowable level is 16 ppm.

If Ecological Resources have been identified use the "If Ecological Resources are Present" column in Appendix 5.

SECTION 4 – SOURCE OF FILL

Name of person providing fill and relationship to the source:

135 Crotty Road (Site)

Location where fill was obtained:

Onsite fill, no soils left Site

Identification of any state or local approvals as a fill source:

If no approvals are available, provide a brief history of the use of the property that is the fill source:

Onsite fill was generated with removal of footings, was reused on site for new addition under foundations/slabs.

Provide a list of supporting documentation included with this request:

The information provided on this form is accurate and complete.

Signature

7/29/26
Date

Jacob Mayer
Print Name

Crotty Road LLC
Firm

E.Tetz & SONS, LLC
A PECKHAM FAMILY COMPANY

172 Prospect Hill Road, Brewster, NY 10509
Tel 914.949.2000 Fax 914.949.2075
www.peckham.com

66 Tetz Rd
Chester, NY 10918
(845) 469-5729

RE: Facility DEC ID 3-3322-0003 7 /00004

Please be advised that the E. Tetz & Sons Chester Quarry, located at 66 Tetz Road Chester, NY 10918, is a NYSDOT Approved Stonefill Facility, Site# 7831. Our facility is also a permitted mine through NYSDEC, Facility DEC ID 3-3322-0003 7 /00004. The permit's effective renewal date had been completed on 03/18/2022, with the expiration proceeding on 03/17/2027.

The material supplied by E.Tetz & Sons' Chester Quarry, is from a virgin source of aggregate. The material has been newly mined, extracted, and manufactured from a naturally occurring geological formation and has not been utilized in any previous construction projects or other applications.

This certification ensures the integrity and originality of the aggregate, confirming its suitability for use in any construction endeavors requiring virgin material.

If further information or verification is required, please do not hesitate to contact us.

Peckham Industries, Inc.
E. Tetz & Sons, LLC

Michael Crowley
Michael Crowley
Assistant Quality Control Manager

NEW YORK STATE DEPARTMENT OF ENVIRONMENTAL CONSERVATION

Division of Environmental Permits, Region 3
21 South Putt Corners Road, New Paltz, NY 12561-1620
P: (845) 256-3054 | F: (845) 255-4659
www.dec.ny.gov

NEW YORK STATE | Department of Environmental Conservation

IMPORTANT NOTICE TO ALL PERMITTEES

The permit you requested is enclosed. Please read it carefully and note the conditions that are included in it. The permit is valid for only that activity expressly authorized therein; work beyond the scope of the permit may be considered a violation of law and be subject to appropriate enforcement action. Granting of this permit does not relieve the permittee of the responsibility of obtaining any other permission, consent or approval from any other federal, state, or local government which may be required.

Please note the expiration date of the permit. Applications for renewal of all operational permits, except for SPDES, must be submitted to the Regional Permit Administrator 180 days or more prior to the expiration date. Applications for renewal submitted to the Regional Permit Administrator must be sent via electronic copy to dep.r3@dec.ny.gov, with one hard copy mailed to the above address.

Application for renewal of SPDES permits must be submitted on forms prescribed by the department and sent both via hard copy to the Chief Permit Administrator, Division of Environmental Permits, 625 Broadway, Albany, NY 12233-1750, and electronic copy to deppermitting@dec.ny.gov. Renewal applications must be submitted 180 days or more prior to the expiration date.

The DEC permit number & program ID number (if applicable) noted on page 1 of the permit are important and should be retained for your records. These numbers should be referenced on all correspondence related to the permit, and on any future applications for permits associated with this facility/project area.

If this project will entail construction of new water pollution control facilities or modifications to existing facilities then plan approval for the system design will be required from the appropriate Department's regional Division of Water or delegated local Health Department, as specified in the State Pollutant Discharge Elimination System (SPDES) permit.

If you have any technical questions regarding the permit, please contact the applicable DEC program staff included on this permit's distribution. For general questions, you may contact me.

Victoria Lawrence

Victoria Lawrence
Division of Environmental Permits, Region 3

NEW YORK STATE | Department of Environmental Conservation

NEW YORK STATE OF OPPORTUNITY. | Department of Environmental Conservation

Application For Permit Transfer and Application for Transfer of Pending Application

NOTE: Please read ALL instructions before completing this application. Please TYPE or PRINT clearly in ink.

PART 1 - TRANSFEREE (New Owner/Operator/Lessee/Applicant) Completes:

1. List Permit Number(s) And Their Effective And Expiration Dates: 3-3322-00037/00004

List Pending Application Number(s):

2. Name Of Transferee: E Tetz & Sons LLC

Mailing Address: 172 Prospect Hill Rd

Post Office City, State, Zip Code: Brewster, NY 10509

Telephone Number (Daytime): (914) 949-2000

Email: kdesi@peckham.com

Transferee is a/an: (check all that apply)
☑ Owner ☑ Operator
☑ Lessee ☑ Applicant

If other than an individual, provide Taxpayer ID Number: 06-1002084

3. Name Of Facility/Project: Chester Site

Location (or Street Address, P.O. City, State, Zip Code, If applicable): 66 Tetz Rd

Town / Village / City: Chester

County: Orange

4. Facility Contact Name: Kevin DeSilva

Mailing Address: 763 Schoharie Turnpike

Post Office City, State, Zip Code: Athens, NY 12015

Telephone Number (Daytime): (518) 945-1120

Email: kdesi@peckham.com

5. Has Work Begun On The Project?
Yes ☑ No ☐ If "No," proposed starting date: _____ Approximate completion date: _____

If there will be any modifications to the current or proposed operation or construction, the transferee must attach a statement specifying the details.

6. CERTIFICATION: This certifies that the Transferee seeks to be the legally responsible party for operations or project development either authorized by the permits identified above or proposed in applications identified above. The Transferee has a copy of the permit(s) and/or application(s) and understands and will comply with all conditions in the referenced permit(s) and supports the content of referenced application(s). Facility operations/project scope/discharges/emissions will remain the same as authorized or as proposed in pending applications. Further, I hereby affirm that under penalty of perjury that information provided on this form and all attachments submitted herewith is true to the best of my knowledge and belief. False statements made herein are punishable as a Class A misdemeanor pursuant to Section 210.45 of the Penal Law.

Printed Name and Title of Transferee: Robert Yaremko, ~~Vice President~~ Manager

Signature of Transferee: _____ Date: 6/23/23

PART 2 - TRANSFEROR (Present or Former Owner/Operator/Lessee/Applicant) Completes:

1. Name Of Transferor: E Tetz & Sons Inc.

Mailing Address: 130 Crotty Rd

Post Office City, State, Zip Code: Middletown, New York 10941

Telephone Number (Daytime): (845) 692-4486

Email: denisetetz@etetz-sons.com

If other than an individual, provide Taxpayer ID Number: 06-1002084

2. Name Of Facility/Project, if different from Facility Name in Part 1: Chester Site

3. CERTIFICATION: This certifies that ownership, operation, or a lease for the facility identified in Part 1 of this form ☐ will be / ☑ was conveyed to the party identified as the Transferee on 06/02/2023 (date). I affirm that this conveyance includes the rights and obligations of the permits, approvals, or applications identified above.

Printed Name and Title of Transferor: Denise Tetz, ~~Vice President~~ Treasurer

Signature of Transferor: _____ Date: 6/26/23

PART 3 - PERMIT TRANSFER VALIDATION SECTION - Department Of Environmental Conservation Completes:

FOR DEC USE ONLY

☒ Transfer of permit approved, effective as of 06/20/2024. Transferee subject to conditions of original permit, without exception.
☐ Transfer of permit approved, with the following modifications or contingencies related to this Permit Transfer:

☐ See attached revised permit page(s): _____
☐ Transfer of application approved. See attached for additional information required.
☐ Transfer denied, new application required. Please complete the enclosed permit application and return it to the undersigned Regional Permit Administrator at the address listed on the reverse side of this form.

NYSDEC PERMIT ADMINISTRATOR	SIGNATURE	DATE
Rebecca S. Crist	Rebecca S. Crist	06/20/2024

copies to:

FOR DEC USE ONLY

(rev. 8/16)

NEW YORK STATE DEPARTMENT OF ENVIRONMENTAL CONSERVATION

Division of Environmental Permits, Region 3
21 South Putt Corners Road, New Paltz, NY 12561-1620
P: (845) 256-3054 | F: (845) 255-4659
www.dec.ny.gov

NEW YORK STATE OF OPPORTUNITY | Department of Environmental Conservation

IMPORTANT NOTICE TO ALL PERMITTEES

The permit renewal you requested is enclosed. Please read it carefully and note the conditions that are included in it. The permit is valid for only that activity expressly authorized therein; work beyond the scope of the permit may be considered a violation of law and be subject to appropriate enforcement action. Granting of this permit does not relieve the permittee of the responsibility of obtaining any other permission, consent or approval from any other federal, state, or local government which may be required.

As you are aware, the mine is in the vicinity of NYS-listed endangered species, northern cricket frog and bog turtle. Incidental Taking of an Endangered Species requires a permit pursuant to 6 NYCRR Part 182.

To further reduce the potential for an incidental take of northern cricket frog pursuant to 6 NYCRR Part 182, it is recommended that, in addition to the take-avoidance conditions that are already in the permit for northern cricket frog, the permittee post and keep the attached "Northern Cricket Frog Education and Encounter plan – *NYS DEC issued*" onsite to inform its employees and visitors about the appearance, natural history, and protected status of Northern Cricket Frogs and report any sightings of northern cricket frogs to the Department.

To reduce the potential for an incidental take of bog turtle pursuant to 6 NYCRR Part 182, it is recommended that the permittee post and keep the attached "Bog Turtle Education and Encounter plan – *NYS DEC issued*" onsite to inform its employees and visitors about the appearance, natural history, and protected status of Bog Turtles and report any sightings of bog turtles to the Department.

NYSDEC Region 3 Endangered Species Biologists can be contacted at 845-256-3098 or Wildife.R3@dec.ny.gov if a sighting occurs.

Please note the expiration date of the permit. Applications for renewal must be submitted to the Regional Permit Administrator **30 days or more prior to the expiration date**.

Applications for renewal submitted to the Regional Permit Administrator must be sent via electronic copy to dep.r3@dec.ny.gov, with one hard copy mailed to the above address.

The DEC permit number & program ID number noted on page 1 of the permit are important and should be retained for your records. These numbers should be referenced on all correspondence related to the permit, and on any future applications for permits associated with this facility/project area.

Be advised, the Uniform Procedures Regulations (6NYCRR Part 621) provide that an applicant may request a public hearing if a permit is denied or contains conditions which are unacceptable to them. Any such request must be made in writing within 30 calendar days of the date of permit issuance and must be addressed to the Regional Permit Administrator at the letterhead address. A copy should also be sent to the Chief Administrative Law Judge at NYSDEC, 625 Broadway, 1st Floor, Albany, NY 12233-1550.

If you have any technical questions regarding the permit, please contact the applicable DEC program staff included on this permit's distribution. For general questions, you may contact me.

Carrie Mackey
Division of Environmental Permits, Region 3
carrie.mackey@dec.ny.gov

Enc: Permit Renewal
Northern Cricket Frog Education and Encounter plan – *NYS DEC issued*
Bog Turtle Education and Encounter plan – *NYS DEC issued*

PERMIT

Under the Environmental Conservation Law (ECL)

Permittee and Facility Information

Permit Issued To:
E TETZ & SONS INC
130 CROTTY RD
MIDDLETOWN, NY 10941
(845) 692-4486

Facility:
CHESTER SITE
Off Tetz Rd (access from 66 Tetz Rd)
CHESTER, NY 10918

Facility Location: in CHESTER in ORANGE COUNTY
Facility Principal Reference Point: NYTM-E: 558.16 NYTM-N: 4577.055
Latitude: 41°20'34.4" Longitude: 74°18'17.4"
Authorized Activity: Continue to mine and process (crush and dry screen) sand, gravel and shale from a maximum of 46.5 acres of a 58 acre total permitted life of mine area, situated on 58 acres controlled by the permittee, in accordance with the plans and reports referenced in Mined Land Reclamation Permit Condition #1 of this permit and as conditioned in this permit.

Permit Authorizations

Mined Land Reclamation - Under Article 23, Title 27
Permit ID 3-3322-00037/00004 (Mined Land ID 30002)
Renewal Effective Date: 3/18/2022 Expiration Date: 3/17/2027

NYSDEC Approval

By acceptance of this permit, the permittee agrees that the permit is contingent upon strict compliance with the ECL, all applicable regulations, and all conditions included as part of this permit.

Permit Administrator: REBECCA S CRIST, Deputy Regional Permit Administrator
Address: NYSDEC Region 3 Headquarters
21 S Putt Corners Rd
New Paltz, NY 12561

Authorized Signature: Rebecca S Crist Date 03/18/2022

Distribution List

Utter Family Trust
H. Duda, Division of Mineral Resources
L. Masi, Bureau of Wildlife
Supervisor, Town of Chester
J. Orza, Griggs-Lang Consulting Geologists and Engineers, P.C.

Permit Components

MINED LAND RECLAMATION PERMIT CONDITIONS

GENERAL CONDITIONS, APPLY TO ALL AUTHORIZED PERMITS

NOTIFICATION OF OTHER PERMITTEE OBLIGATIONS

Permit Attachments

Blasting Chart - Ground Vibration Limits

MINED LAND RECLAMATION PERMIT CONDITIONS

1. **Conformance With Plans** All activities authorized by this permit must be in strict conformance with the approved plans submitted by the applicant or applicant's agent as part of the permit application. Such plans were approved by the Department on the effective date of this permit and consist of the following items:
The following plans and reports were prepared by Griggs-Lang Consulting Geologists, Inc. or as indicated:

a) "Mining Plan Map" dated November 29, 2010 and last revised September 25, 2020 (2021-2026 renewal; includes 22-acre expansion area) and prepared by Griggs-Lang Consulting Geologists and Engineers, P.C.;

b) "Reclamation Plan Map" dated November 29, 2010 and last revised July 12, 2013 (includes 22-acre expansion area);

c) "Typical Sections A-A' to D-D'" dated November 29, 2010 and last revised July 12, 2013 (includes 22-acre expansion area);

d) Report entitled "Modification Application" dated April 2012;

e) Report entitled "Noise Impact Assessment" dated February 2012;

f) Report entitled "Wetlands, Vegetation, and Wildlife Resources at the Chester Mine Modification Area" dated March 2012 and prepared by Terrestrial Environmental Specialists, Inc.;

g) Report entitled "Visual Impact Analysis of Chester Site" dated March 30, 2012 and prepared by CLA Site Landscape Architecture, Engineering & Planning, P.C.;

h) Report entitled "Reports of Investigations, Phase I Archeological Investigations for the proposed E. Tetz & Sons, Inc. Mining Expansion, Town of Chester, Orange County, New York" dated December 2009 and prepared by Tracker Archeology Services, Inc.;

i) Report entitled "Modified Mined Land-Use Plan" dated July 12, 2013;

j) Response letter dated September 26, 2013 submitted to the Department in response to the July 5, 2013 Notice of Incomplete Application letter;

k) Report entitled "Northern Cricket Frog Fall Migratory Movement Survey at the Chester Mine Modification Area" dated April 2013 and prepared by Terrestrial Environmental Specialists, Inc.;

l) Report entitled "2015-2020 Mining Permit Renewal Report" dated May 15, 2015;

m) Report entitled "2021-2026 Mining Permit Renewal Report" dated December 2, 2020 and prepared by Griggs-Lang Consulting Geologists and Engineers, P.C.;

n) "Mining Permit Application" form dated December 4, 2020 and signed by Gary Tetz.

2. **Prohibited Days of Operation** All mining, reclamation and associated activities, which includes blasting, are prohibited on Sunday and the following 6 legal holidays: New Year's Day, Memorial Day, Independence Day (July 4th), Labor Day, Thanksgiving and Christmas.

3. **Blasting Hours** Blasting shall be conducted between the hours of 9:00 a.m. to 5:00 p.m. Exceptions from these hours will require prior Department approval. No blasting will occur on Sundays or legal holidays.

4. **No Deviation From Approved Plan** The permittee shall not deviate or depart from the approved mined land use plan without approval by the Department of an alteration or modification thereto.

5. **No Unpermitted Discharge Outside Limits of Mine** There shall be no natural swales or channels or constructed features such as ditches, pipes, etc., that are capable of discharging waters to any offsite areas or to any areas outside the limits of the Life of Mine except those explicitly described and shown in the narrative and graphic portions of the approved Mined Land Use Plan. All silt laden water and storm water generated on, or running across, the site shall be retained within the approved project area. The permittee must comply with all applicable State Pollutant Discharge Elimination System (SPDES) permit requirements and provide necessary notifications for off-site point source discharges.

6. **Strip and Stockpile Soils for Reclamation** Prior to the excavation of previously undisturbed areas, topsoil and overburden shall be stripped, stockpiled separately, and used for reclamation of mined areas. These stockpiles shall be seeded to establish a vegetative cover within 30 days, or as soon as practicable

following their construction. The permittee shall locate all overburden stockpiles within the permitted area of the approved Life of Mine. Sufficient quantities of topsoil must be retained on the site for use in reclamation, unless prior approval is granted by the Department.

7. **Maintain Work Above Groundwater** A minimum of 5 feet of undisturbed material shall be maintained above seasonal high groundwater elevation at all locations.

8. **Maintain Area Markers for Permit Term** The permittee shall provide permanent markers such as stakes, posts or other devices acceptable to the Department to identify and delineate the permit area, as outlined on the approved Mining Plan Map. These markers are to be installed prior to the start of mining and shall be maintained for the duration of the permit term.

9. **Installation of Additional Permit Term Markers** The permittee shall install permanent markers such as stakes, posts or other devices acceptable to the Department to identify and delineate the western and southern boundaries of the modification area located on property owned by Concrete Properties, LLC as outlined on the approved Mining Plan Map referenced in Condition #1 when mining/excavation is within 100 feet of the common property line between the lands owned by Utter and Concrete Properties, LLC.

10. **Licensed Blaster Required** All blasting shall be undertaken, monitored and recorded by a blaster licensed by the New York State Department of Labor. The permittee shall maintain copies of all blasting records. Such records shall be made available to the Department (NYSDEC) upon request.

11. **Seismograph Monitoring** All blasts shall be monitored with a properly calibrated seismograph. One seismograph shall be placed at an on-site location in line with the blast and the nearest off-site receptor. Seismographs shall also be placed at the locations shown on the approved plans and at locations specified by the Department Mined Land Reclamation Specialist after consultation with the on-site licensed blaster. Seismograph records shall be provided to the Department upon request.

12. **Ground Vibration Limits** Ground vibration shall not exceed the limits as per the attached ground vibration limits graph from the U. S. Bureau of Mines Report of Investigation 8507 (Figure B-1, Safe levels of blasting vibration for houses using a combination of velocity and displacement). Maximum peak particle velocity shall not exceed these limits at the location of any dwelling, public building, school, church, or community or institutional building outside the permit area.

13. **Air Blast Limits** Air blast shall not exceed 133 dB at the location of any dwelling, public building, school, church, or community or institutional building outside the permit area.

14. **No Flyrock Beyond the Property Line** There shall be no flyrock beyond the property line including flyrock that travels in the air or along the ground. In the event of flyrock beyond the property line, all blasting shall cease immediately and the flyrock incident shall be reported within 24 hours to the Regional Mined Land Reclamation Specialist. Blasting shall not resume until written approval to resume blasting is obtained from the Department.

15. **Storage of Explosives** Storage of explosives on site shall conform to State of New York, Department of Labor Industrial Code Rule 39, found at 12 NYCRR 39:

    Part 39.6 General Provisions for the Storage and Handling of Explosives
    Part 39.8 Construction and Maintenance of Magazines
    Part 39.9 Location of Magazines

16. **Prevent Injury** Blasting shall be conducted in a manner to prevent injury to persons and damage to public or private property outside the permit area.

17. **Dust Control** Water or other approved dust palliatives must be applied to haulageways and other parts of the mine, as often as necessary, to prevent visible dust from leaving the mine property.

18. **Water Spray Mine for Dust Control** Dust generated by mining activities and by haulroad use shall be controlled by water spray as often as needed to suppress dust. All paved surfaces shall be swept as often as necessary to suppress dust. Chemical treatments shall not be used for dust control.

19. **Fueling of Equipment and Reporting of Spills** Fueling of equipment shall be controlled to prevent spillage. Any spillage of fuels, waste oils, other petroleum products or hazardous materials shall be reported to the Department's Spill Hotline number (1-800-457-7362) within 2 hours. The permittee shall retain the Department's Spill Response number for immediate access in the permittee's office and at the mine site.

20. **File Termination Notice** If the permittee decides to discontinue operation, a written termination notice must be filed with the Department within 30 days after such temporary or permanent termination of mining.

21. **Bond, Surety to Remain in Force** Any required reclamation bond or other surety, in an amount determined by the Department, shall be maintained in full force and effect. Such a bond or other surety shall not be terminated until the reclamation of the mined area is approved by the department in writing.

22. **NATURAL RESOURCE CONDITION #1**
Protection of Freshwater Wetland WR-7 and Black Meadow Creek All necessary precautions shall be taken to prevent the contamination of Freshwater Wetland WR-7 and its 100-foot adjacent area, and Black Meadow Creek by silt, sediment, fuels, debris or any other pollutant associated with mining and mining procedures.

23. **NATURAL RESOURCE CONDITION #2**
Northern Cricket Frog Barrier The permittee shall install a 48"-high temporary restrictive barrier ("drift fence") along the western-southwestern perimeter of the mine site, as indicated on the approved "Mining Plan Map" referenced in Condition #1, to prevent any Northern Cricket Frogs from entering the area. The barrier shall be constructed in accordance with the design specifications outlined in the following Department document: "Guidelines for Reviewing Projects for Potential Impacts to the Northern Cricket Frog" (revised September 29, 2010, G. Kenney).

24. **NATURAL RESOURCE CONDITION #3**
Installation and Inspection of the Northern Cricket Frog Barrier The permittee shall install the Northern Cricket Frog barrier (fence) prior to any stripping/mining operations being conducted in the designated area. The barrier shall be inspected on a monthly basis during the active mining season. The barrier will be inspected on a daily basis when mining/excavation operations progress to within 200 feet of the barrier fence (April 1 - June 15 and August 15 - November 1), and if necessary, repaired immediately to a fully functioning condition. The barrier will be maintained for the life of the mine.

GENERAL CONDITIONS - Apply to ALL Authorized Permits:

1. **Facility Inspection by The Department** The permitted site or facility, including relevant records, is subject to inspection at reasonable hours and intervals by an authorized representative of the Department of Environmental Conservation (the Department) to determine whether the permittee is complying with this permit and the ECL. Such representative may order the work suspended pursuant to ECL 71- 0301 and SAPA 401(3).

The permittee shall provide a person to accompany the Department's representative during an inspection to the permit area when requested by the Department.

A copy of this permit, including all referenced maps, drawings and special conditions, must be available for inspection by the Department at all times at the project site or facility. Failure to produce a copy of the permit upon request by a Department representative is a violation of this permit.

2. **Relationship of this Permit to Other Department Orders and Determinations** Unless expressly provided for by the Department, issuance of this permit does not modify, supersede or rescind any order or determination previously issued by the Department or any of the terms, conditions or requirements contained in such order or determination.

3. **Applications For Permit Renewals, Modifications or Transfers** The permittee must submit a separate written application to the Department for permit renewal, modification or transfer of this permit. Such application must include any forms or supplemental information the Department requires. Any renewal, modification or transfer granted by the Department must be in writing. Submission of applications for permit renewal, modification or transfer are to be submitted to:

Regional Permit Administrator
NYSDEC Region 3 Headquarters
21 S Putt Corners Rd
New Paltz, NY12561

4. **Submission of Renewal Application** The permittee must submit a renewal application at least 30 days before permit expiration for the following permit authorizations: Mined Land Reclamation.

5. **Permit Modifications, Suspensions and Revocations by the Department** The Department reserves the right to exercise all available authority to modify, suspend or revoke this permit. The grounds for modification, suspension or revocation include:

a. materially false or inaccurate statements in the permit application or supporting papers;

b. failure by the permittee to comply with any terms or conditions of the permit;

c. exceeding the scope of the project as described in the permit application;

d. newly discovered material information or a material change in environmental conditions, relevant technology or applicable law or regulations since the issuance of the existing permit;

e. noncompliance with previously issued permit conditions, orders of the commissioner, any provisions of the Environmental Conservation Law or regulations of the Department related to the permitted activity.

6. Permit Transfer Permits are transferrable unless specifically prohibited by statute, regulation or another permit condition. Applications for permit transfer should be submitted prior to actual transfer of ownership.

NOTIFICATION OF OTHER PERMITTEE OBLIGATIONS

Item A: Permittee Accepts Legal Responsibility and Agrees to Indemnification
The permittee, excepting state or federal agencies, expressly agrees to indemnify and hold harmless the Department of Environmental Conservation of the State of New York, its representatives, employees, and agents ("DEC") for all claims, suits, actions, and damages, to the extent attributable to the permittee's acts or omissions in connection with the permittee's undertaking of activities in connection with, or operation and maintenance of, the facility or facilities authorized by the permit whether in compliance or not in compliance with the terms and conditions of the permit. This indemnification does not extend to any claims, suits, actions, or damages to the extent attributable to DEC's own negligent or intentional acts or omissions, or to any claims, suits, or actions naming the DEC and arising under Article 78 of the New York Civil Practice Laws and Rules or any citizen suit or civil rights provision under federal or state laws.

Item B: Permittee's Contractors to Comply with Permit
The permittee is responsible for informing its independent contractors, employees, agents and assigns of their responsibility to comply with this permit, including all special conditions while acting as the permittee's agent with respect to the permitted activities, and such persons shall be subject to the same sanctions for violations of the Environmental Conservation Law as those prescribed for the permittee.

Item C: Permittee Responsible for Obtaining Other Required Permits
The permittee is responsible for obtaining any other permits, approvals, lands, easements and rights-of-way that may be required to carry out the activities that are authorized by this permit.

Item D: No Right to Trespass or Interfere with Riparian Rights
This permit does not convey to the permittee any right to trespass upon the lands or interfere with the riparian rights of others in order to perform the permitted work nor does it authorize the impairment of any rights, title, or interest in real or personal property held or vested in a person not a party to the permit.

Item E: SEQR Type II Action, Renewal Under the State Environmental Quality Review Act (SEQR), the Department of Environmental Conservation has determined that this permit is a renewal where there will be no material change in permit conditions or the scope of permitted activities and is therefore a Type II Action and not subject to further procedures under this law.

BLASTING CHART - GROUND VIBRATION LIMITS

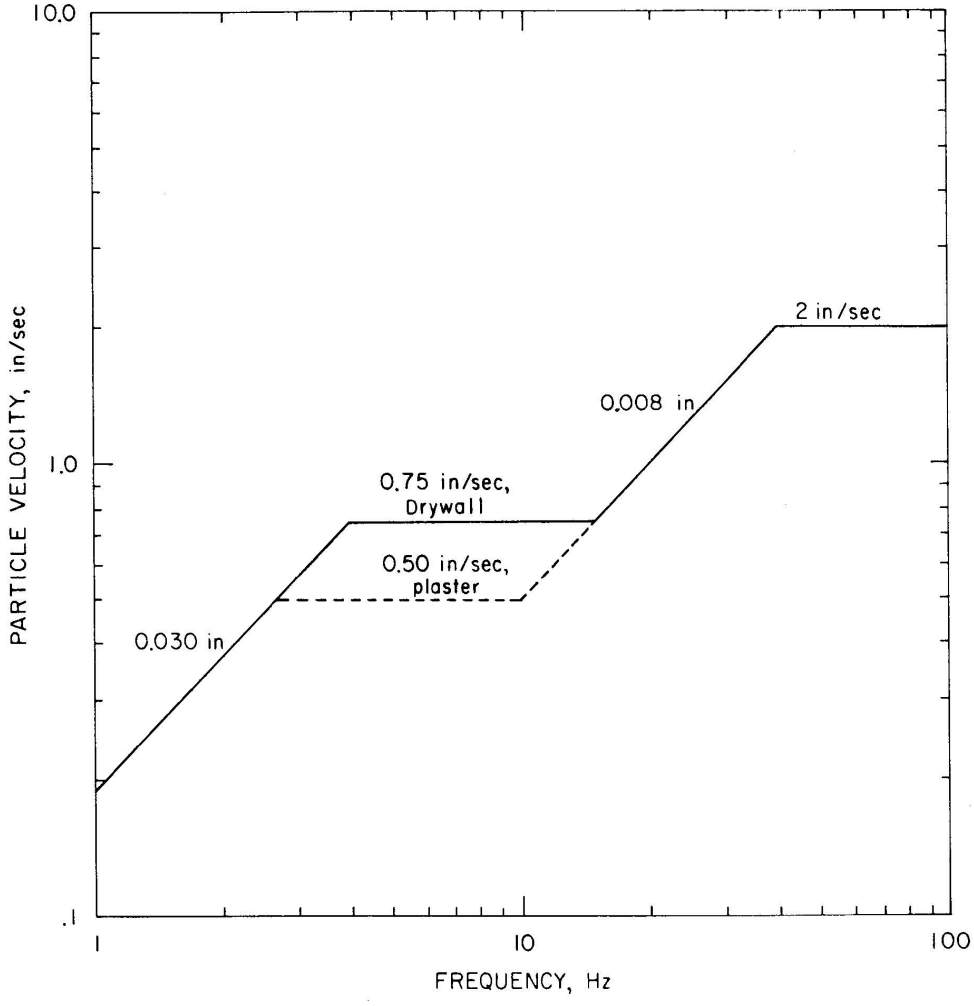

RI-8501 Figure B-1. Safe levels of blasting vibration for houses using a combination of velocity and displacement.

From: Siskind, D. E., Stagg, M. S., Kopp, J. W., and Dowding, C. H., 1980, Structure Response and Damage Produced by Ground Vibration From Surface Mine Blasting, Bureau of Mines Report of Investigation RI-8507, United States Department of the Interior, 74 p.

DEC# 3-3322-00037/00004, MLF# 30002 Chester Site - 2022 Permit Renewal

Northern Cricket Frog Education and Encounter plan – *NYS DEC issued*

This project site is located in an area of known Northern Cricket Frog (NCF) habitat and possible use. Northern cricket frogs are terrestrial and semi-aquatic and thus use multiple habitat types during the year and make movements over land between breeding ponds and overwintering areas through upland areas, wetlands, and stream corridors. They can move 1500ft from breeding ponds to over wintering habitats. They are active on the landscape (wetlands, breeding areas, and uplands) between March 15th and November 30th.

This document is intended, through notifying permittees/landowners of the presence of the species, to minimize impacts to northern cricket frog that may be encountered during otherwise lawful activities and shall be used in accordance with the Department's Permits and jurisdictional response letters for the above referenced project type, including, if applicable, all other species take avoidance measures proposed or in place. This information should be provided to mine operators, contractors, workers, or occupants at the proposed facility.

- The northern cricket frog is listed as "Endangered" on the New York State Endangered Species List.
- As a listed species, the northern cricket frog is protected under the New York State Environmental Conservation Law.
- As provided by the law, it is illegal for any person to approach, touch, move, threaten, harass, disturb, injure, or kill NCF. It is also illegal to take import, transport, possess, or sell any frog, its skin, or other parts, except under a permit or license from the New York State Department of Environmental Conservation (DEC).
- A violation of the Environmental Conservation Law is punishable by both criminal and civil penalties.
- NCF may be encountered along roads, near homes and yards, in construction sites, in mine sites and in undeveloped areas. If encountered, move away and do not attempt injure or collect the frog.
- If any NCFs are seen in the work area, stop all work immediately in that area.
- Contact the contractor or supervisor in charge and delay work in the area until the frog has moved safely from the area. Allow the frog to continue on its way if it is safe to do so.
- If the frog does not move out of harm's way on its own, and unless a qualified Monitor licensed in New York State to handle and relocate the species has been retained who will promptly arrange for the frog to be moved, please contact the NYS Department of Environmental Conservation Region 3 Bureau of Wildlife at 845-256-3098 for information regarding next steps and moving the species in accordance with New York State Law.
- If the frog is found in the roadway (or in immediate danger), it can be moved out of harm's way to the side of the road in the direction it is heading.
- Report any encounters within 24 hours at 845-256-3098 or Wildlife.R3@dec.ny.gov. Please provide the location, the project name, explanation of the encounter, and any photographs taken, when reporting.

Accompanying handouts:

- NYS DEC Northern Cricket Frog Fact Sheet
https://www.dec.ny.gov/animals/7120.html

- Frogs and Toads of New York State 2002
https://www.dec.ny.gov/docs/administration_pdf/frogs.pdf

All Photo Credits L. Masi NYS DEC

Species description

The Northern Cricket Frog is one of the smallest vertebrates in New York (~1"). They have small dorsal warts, a light belly, and a dark triangle pointing backward between the eyes. Most specimens have a brownish-greenish background color, but there is wide variation from subtle browns or grays to stripes of brilliant reds or greens. The male's throat patch is yellow during the breeding season (NYNHP 2019). Northern Cricket Frogs are among the most agile of leapers and can jump surprisingly long distances (5-6 feet) for its small size. (NYSDEC Fact Sheet)

Sources:

New York Natural Heritage Program (NYNHP). 2019. Online Conservation Guide for *Acris crepitans*. Available from: https://guides.nynhp.org/northern-cricket-frog/ . Accessed October 6, 2021.

New York State Department of Environmental Conservation. Recovery Plan for NYS Populations of the Northern Cricket Fog (Acris crepitans). June 2015. https://www.dec.ny.gov/docs/wildlife_pdf/crickfrogrecplan15.pdf

Other more common species that may be encountered. – ***All frogs are protected from collection. Leave all wildlife in the wild unless injured (see below).***

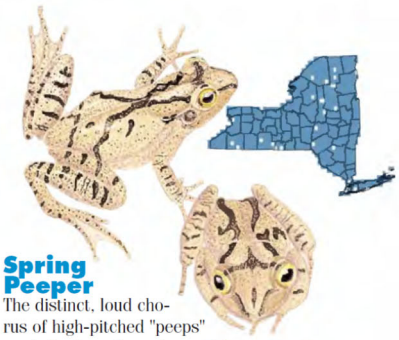

Spring Peeper

The distinct, loud chorus of high-pitched "peeps" made by these frogs is considered by many an announcement of spring. More often heard than seen, these very small pale-brown frogs emerge during the first rains of the year. They are smooth-skinned with an X-shaped mark on their backs, and small discs on the tips of their toes. Spring Peepers breed from March to May in marshes, ponds, alder-filled ditches, swamps and gravel pits. The nearly microscopic eggs are individually attached to submerged plants. Tadpoles are tiny and distinctive, with high speckled dorsal fins. Adults average 1 to 1½ inches long.

Gray Treefrog

More frequently heard than seen, the Gray Treefrog is a secretive arboreal frog with large adhesive discs on the tips of its toes. Found in moist, deciduous woodlands, adults have rough skin with dark blotches on the back, and a base color that can range from gray to light green; immatures are lime green. The frog's Latin name, *versicolor*, refers to its remarkable ability to change color. A Gray Treefrog's call is a hearty trilling, often sung while high in a tree near its breeding area. Adult frogs converge on semi-permanent wetlands, usually beaver ponds and red-maple swamps, to breed from late April to July. The bi-colored eggs are laid singly or in clusters, and attach to submerged vegetation. Tadpoles are green or black with high, dark, blotched fins and often a reddish tail. Adults average 1½ to 2 inches long.

If you encounter any injured wildlife, please contact a local NYS DEC licensed Wildlife Rehabilitator by scanning the QR code, or calling the Regional Wildlife office at

845-256-3098

SCAN ME

https://www.dec.ny.gov/cfmx/extapps/sls_searches/index.cfm?p=live_rehab

DEC# 3-3322-00037/00004, MLF# 30002 Chester Site - 2022 Permit Renewal

Bog Turtle Education and Encounter plan – *NYS DEC issued*

This project site is located in an area of known Bog turtle habitat. Bog turtles use primarily wetland habitats but can make periodic movements over land to new habitats during dispersal events. They are particularly active on the landscape between April 1st to September 30th. This document is intended, through notifying permittees/landowners of the presence of the species, to minimize impacts to Bog and other turtles that may be encountered during otherwise lawful activities and be used in accordance with the Department's Permits and jurisdictional response letters for the above referenced project, including, if applicable all other species take avoidance measures proposed. This information should be provided to construction contractors, workers or occupants at the proposed location. *(This document was issued to a specific project during a review conducted by the Department and should not substitute for a review by the Department for another project, additional take avoidance measure and/or project specific Education and Encounter plans may still be required).*

- The bog turtle is listed as "Endangered" on the New York State Endangered Species List.
- As a listed species, the bog turtle is protected under the New York State Environmental Conservation Law.
- As provided by the law, it is illegal for any person to approach, touch, move, threaten, harass, disturb, injure, or kill a bog turtle. It is also illegal to take import, transport, possess, or sell any bog turtle, its skin, or other parts, except under a permit or license from the New York State Department of Environmental Conservation (DEC).
- A violation of the Environmental Conservation Law is punishable by both criminal and civil penalties.
- The bog turtle may be encountered along roads, near homes and yards, in construction sites, and in undeveloped areas. If encountered, move away and do not attempt injure or collect the turtle.
- If any turtle species is seen in the work area, stop all work immediately in that area.
- Contact the contractor in charge and delay work in the area until the turtle has moved safely from the area. Allow the turtle to continue on its way if it is safe to do so.
- If the turtle does not move out of harm's way on its own, and unless a qualified Monitor licensed in New York State to handle and relocate the species has been retained who will promptly arrange for the turtle to be moved, please contact the NYS Department of Environmental Conservation Region 3 Bureau of Wildlife at 845-256-3098 for information regarding next steps and moving the species in accordance with New York State Law.
- If the turtle is found in the roadway (or in immediate danger), it can be moved out of harm's way to the side of the road in the direction it is heading.
- Please report any encounters within 24 hours at 845-256-3098 or Wildlife.R3@dec.ny.gov. Please provide the location, the project name, and explanation of the encounter.
- Take steps to limit potential trap hazards on the property by backfilling excavations in the same day or covering excavations.

Accompanying handouts:

- Turtles of New York PDF. https://www.dec.ny.gov/docs/administration_pdf/turtles2.pdf
- NYS DEC Bog Turtle Fact Sheet. 2020 https://www.dec.ny.gov/animals/7166.html

Photo Credit L. Masi NYS DEC

Species description

The bog turtle is New York's smallest turtle, reaching a maximum length of 4.5 inches. It is one of seventeen species of turtles found in New York State, including marine turtles. A bright yellow or orange blotch on each side of its head and neck are a distinctive feature of this species. The body color is dark with an orange-red wash on the inside of the legs of some individuals. The carapace (upper shell) is domed and somewhat rectangular, often with prominent rings on the shell plates (scutes). In some older individuals, or those that burrow frequently in coarse substrates, the shell may become quite smooth and polished. Although generally black, the carapace is sometimes highlighted by a chestnut sunburst pattern in each scute. The plastron (lower shell) is hingeless, with a pattern of cream and black blotches.

Other more common species that may be encountered. *– All turtles are protected from collection. Leave all turtles in the wild unless injured (see below).*

Box Turtle *(Special Concern)*

Shell length: 4.5 - 6 inches

New York's most terrestrial turtle, the box turtle spends most of its time wandering open fields and forests, only retreating to shallow pools or wetlands to soak during very hot and dry periods. It can completely close its shell, distinguishing it from other turtle species. The box turtle's high-domed carapace is brightly highlighted; the plastron is hinged. Males and females can be told apart by eye color—usually brown for females, red for males. Box turtles eat a variety of fleshy fruits such as strawberries and raspberries, mushrooms and other soft vegetation, worms, slugs and snails. They will also scavenge dead birds and mammals.

Wood Turtle *(Special Concern)*

Shell length: 6 - 8 inches

The wood turtle gets its name from its preferred wooded habitat, as well as from the color of its carapace—the prominent annuli give it the sculpted appearance of weathered tree rings. Wood turtles are usually found in or along clean, fast-flowing trout streams, foraging during the summer in the woodlands bordering the streams. Like other turtles, females move into open areas for nesting. Wood turtles eat berries, mushrooms, small fish, slugs, worms and tadpoles. They have also been known to feed on carrion.

Snapping Turtle

Shell length: 10 - 16 inches

Easily recognized by its large head, long saw-toothed tail, stocky legs with large claws, and the jagged, saw-toothed rear edge on its dark shell, the snapping turtle is our largest freshwater turtle. Known for its defensive nature, this turtle will attack on land, but prefers to flee in water. Highly aquatic, this species is found in freshwater and brackish marshes, ponds, lakes, rivers and streams. Snappers often scavenge, but they also take live food ranging in size from small invertebrates to young waterfowl or small fish.

Painted Turtle

Shell length: 5 - 7 inches

Our most common species, the painted turtle is often seen basking in large numbers on logs and stumps in marshes, ponds and lakes, disappearing into the water quickly when disturbed. Bright stripes on the neck and spots on the head can be seen when the turtle is basking. The dark carapace is bordered with red. The plastron is plain yellow in the Eastern painted turtle, and has a dark central blotch in the Midland painted turtle. Males have long claws on their front feet; females have longer shells. Painted turtles eat a variety of invertebrates, tadpoles and vegetation, but will also scavenge carrion.

If you encounter an injured turtle, please contact a local NYS DEC licensed Wildlife Rehabilitator by scanning the QR code, or calling the Regional Wildlife office at

845-256-3098

https://www.dec.ny.gov/cfmx/extapps/sls_searches/index.cfm?p=live_rehab

SCAN ME

Chester Quarry
66 Tetz Rd
Chester, NY 10918
845-866-0019

Quality Test Report

Plant 66-Chester Quarry
Product 1316-No. 1 Stone (3/8")
Specification NYSDOT #1 Stone

1722344484

Sample Information

Sample No 1722344484
Date Sampled 06/15/2026 12:28
Sampled By Owen Ince
Type Investigative
Method Stockpile

Split Sample ☐
Resample ☐

Gradation Results

Date Completed 06/15/2026 12:28
Tested By Manh Huynh

Unit	Moist Mass	Dry Mass	Wash Mass	Moisture %	Wash Loss %	Procedure
g		1552.40				

Sieve	Mass Retained	Cum Mass Retained	Ind % Retained	% Retained	% Passing	Target	Specification	Comment
3/4" (19mm)	0.00	0.00	0	0	100			
1/2" (12.5mm)	128.10	128.10	8	8	92		90-100	
3/8" (9.5mm)	564.00	692.10	36	45	55			
1/4" (6.3mm)	720.30	1412.40	46	91	9	5-15\10	0-15	
#4 (4.75mm)	100.70	1513.10	6	97	3			
1/8" (3.17mm)	20.50	1533.60	1	99	1			
#8 (2.36mm)	1.40	1535.00	0	99	1			
#16 (1.18mm)	1.20	1536.20	0	99	1			
#200 (75µm)	6.20	1542.40	0.4	99.4	0.6		0-1	
Pan	10.00	1552.40	0.6	100.0	0.0			

Chester Quarry
66 Tetz Rd
Chester, NY 10918
845-866-0019

Quality Test Report

Plant 66-Chester Quarry
Product 1312-No. 2 Stone (3/4")
Specification NYSDOT #2

1815410629

Sample Information

Sample No 1815410629
Date Sampled 06/15/2026 13:43
Sampled By Owen Ince
Type Production
Method Under Conveyor

Split Sample ☐
Resample ☐

Gradation Results

Date Completed 06/15/2026 13:43
Tested By Owen Ince

Unit	Moist Mass	Dry Mass	Wash Mass	Moisture %	Wash Loss %	Procedure
g	3821.20	3806.60		0.4		

Sieve	Mass Retained	Cum Mass Retained	Ind % Retained	% Retained	% Passing	Target	Specification	Comment
2" (50mm)	0.00	0.00	0	0	100			
1 1/2" (37.5mm)	0.00	0.00	0	0	100			
1" (25mm)	74.80	74.80	2	2	98		90-100	
3/4" (19mm)	1415.20	1490.00	37	39	61			
1/2" (12.5mm)	1742.70	3232.70	46	85	15		0-15	
3/8" (9.5mm)	421.40	3654.10	11	96	4			
1/4" (6.3mm)	122.90	3777.00	3	99	1			
#4 (4.75mm)	4.30	3781.30	0	99	1			
#8 (2.36mm)	2.70	3784.00	0	99	1			
#200 (75µm)	10.40	3794.40	0.3	99.7	0.3		0-1	
Pan	12.20	3806.60	0.3	100.0	0.0			

Other Test Results

Test Name	Date Procedure	Result Lab	Unit	Target	Specification Tested By	Comment
Total Moisture	06/15/2026 13:43	0.38	%		Owen Ince	

A PECKHAM FAMILY COMPANY

Chester Quarry
66 Tetz Rd
Chester, NY 10918
845-866-0019

Quality Test Report

Plant 66-Chester Quarry
Product 1317-No. 57 Stone (1/2")
Specification ASTM No. 57

1684683979

Sample Information

Sample No 1684683979
Date Sampled 06/30/2026 13:21
Sampled By Manh Huynh
Type Investigative
Method Under Conveyor

Split Sample ☐
Resample ☐

Gradation Results

Date Completed 06/30/2026 13:21
Tested By Manh Huynh

Unit	Moist Mass	Dry Mass	Wash Mass	Moisture %	Wash Loss %	Procedure
g		2078.30				

Sieve	Mass Retained	Cum Mass Retained	Ind % Retained	% Retained	% Passing	Target	Specification	Comment
1 1/2" (37.5mm)	0.00	0.00	0	0	100		100-100	
1" (25mm)	20.70	20.70	1	1	99		95-100	
3/4" (19mm)	379.70	400.40	18	19	81			
1/2" (12.5mm)	752.20	1152.60	36	55	45		25-60	
3/8" (9.5mm)	288.30	1440.90	14	69	31			
1/4" (6.3mm)	450.90	1891.80	22	91	9			
#4 (4.75mm)	111.00	2002.80	5	96	4		0-10	
#8 (2.36mm)	47.00	2049.80	2	99	1		0-5	
Pan	28.50	2078.30	1.4	100.0	0.0			

E. Tetz & SONS INC.

130 Crotty Road * Middletown, NY 10941
(845) 692-4486 * FAX (845) 692-6838

INVOICE	PAGE
355671	Page 1

CUSTOMER NUMBER	DATE
ABM10	01/19/21

SOLD TO: ASSOCIATED BUILDING MAINTENANC
680 ROUTE 211 3B-115
MIDDLETOWN NY 10941

SHIP TO: 135 CROTTY RD MDTWN

LOT#	Customer PO	Job ID	Terms
	590-4895JOHN	UPSTATE GLASS	Net 30 Days

Ticket#	Date	Item Number	Description	U/M	Qty	Unit Price	Total
423159	01/19/21	405	CHESTER 3/4 & 3/8 #57	TN	24.62	24.00	590.88

***** PRODUCT SUMMARY *****

PRODUCT	QUANTITY	U/M
CHESTER 3/4 & 3/8 #57	24.62	TN

Sub-Total		590.88
Sales Tax-	OR	48.01
Invoice Total		638.89