EBIZNEWDOC

EBIZNEWDOC

Write or Copy/Paste Document Title In This Space

Report.. HW. 546022. 2002-01-15. O & M Manual
Remedial Work Element 1

DO NOT PHOTOCOPY. PRINT FROM PDF VERSION ONLY.

EBIZNEWDOC

EBIZNEWDOC

IT Corporation
13 British American Boulevard
Latham, NY 12110-1405
Tel. 518.783.1996
Fax. 518.783.8397

A Member of The IT Group

RECEIVED
JAN 25 2002
Document Processing Control

OPERATION AND MAINTENANCE MANUAL

REMEDIAL WORK ELEMENT I
DRINKING WATER

Malta Rocket Fuel Area Site
Malta, New York

Prepared for:

General Electric Company
Corporate Environmental Programs
320 Great Oaks Boulevard, Suite 323
Albany, New York 12203

January 15, 2002

M:/189reps/MRFA/O&M Manual_Jan02

TABLE OF CONTENTS:

1.0 INTRODUCTION 1

1.1 SITE DESCRIPTION 1
1.2 BACKGROUND 2
1.3 PURPOSE AND SCOPE 2
1.4 DESCRIPTION OF WATER SUPPLY SYSTEM 3
1.5 TREATMENT SYSTEM MODIFICATIONS 4
1.5.1 March 1998 System Modifications 4
1.5.2 October 2001 System Modifications 5

2.0 REGULATORY CONSIDERATIONS 6

3.0 SYSTEM OPERATION AND MONITORING 7

3.1 DESCRIPTION OF SYSTEM OPERATION 7
3.1.1 Groundwater Supply 7
3.1.2 Groundwater Treatment System 7
3.1.3 Treated Water Storage 8
3.2 SYSTEM CONTROLS 8

4.0 PERFORMANCE MONITORING OF TREATMENT SYSTEM 10

4.1 PERFORMANCE SPECIFICATIONS 11
4.1.1 System Settings 12
4.2 INFLUENT/EFFLUENT SAMPLING REQUIREMENTS 13
4.3 REPORTING 13

5.0 MAINTENANCE MANAGEMENT 15

5.1 GENERAL REQUIREMENTS 15
5.2 PROJECT DOCUMENTS 15
5.2.1 Equipment Log 16
5.3 PLANNING AND SCHEDULING 16
5.3.1 General 16
5.3.2 Preventive Maintenance Program 16
5.3.3 Monthly System Maintenance 17
5.3.3.1 Flow Control Valves & Process Line Check Valves 17
5.3.3.2 Groundwater Recovery Pumps & Totalizers 17
5.3.3.3 Air Stripper 17
5.3.3.4 Treated Water Discharge Pump & Settling Tank 18
5.3.3.5 System Interlocks 18
5.3.4 Quarterly System Maintenance 19
5.3.5 Annual System Maintenance 19
5.3.5.1 Groundwater Pumps 19
5.3.5.2 100,000 Gallon Reservoir 19
5.3.5.3 Settling Tank 20
5.3.5.4 Air Stripper Blower Motor 20
5.3.5.5 Air Stripper Tower Packing, Spray Nozzle and Mist Eliminator 20

5.3.6 Corrective Maintenance *20*
5.4 SPARE PARTS INVENTORY 21
5.4.1 Replacement Parts and Components *21*

6.0 QUALITY ASSURANCE AND HEALTH AND SAFETY 22

7.0 CONTINGENCY PLANS 24

7.1 INCREASED WATER DEMAND 24
7.2 DECREASED (ZERO) WATER DEMAND 24
7.3 TRANSITION OF OPERATIONS CONTRACTOR 25

8.0 REFERENCES 26

TABLES:

1. Process Operating Report
2. Air Stripper Analytical Results
3. Summary of Sampling Program, Preservatives, Holding Times and Containers
4. Contingency Monitoring
5. Equipment Log
6. Maintenance Checklist
7. Spare Parts Inventory
8. Weekly Remote Inspection Documentation Form

FIGURES:

1. Site Map
2. MRFA Test Station Schematic
3. Process and Instrumentation Diagram – Water Supply and Treatment System
4. System Controls Electrical Ladder Diagram

APPENDICES:

A. Air Stripper System October 2001 Equipment Specifications
B. Sample Semi-Annual O&M Report of Groundwater Treatment System
C. O&M Manual for Air Stripper
D. Quality Assurance Project Plan
E. Health and Safety Plan
F. Approved Modifications to the QAPP and HASP

1.0 INTRODUCTION

This Operation and Maintenance (O&M) Manual is a revised version of the Manual dated March 31, 1998, prepared by ERM-Northeast, Inc. This version reflects recent minor system modifications and addresses system maintenance and management issues in greater detail than the original version.

This (O&M) Manual has been prepared to provide guidance to personnel responsible for operating and maintaining the drinking water supply and water treatment system at the Malta Test Station (the Test Station), which is part of the Malta Rocket Fuel Area Superfund Site (the Site). The groundwater at the Site was found to be contaminated with volatile organic compounds (VOCs), primarily carbon tetrachloride (carbon tet) and trichloroethylene (TCE). Extracted groundwater is treated via air stripping before use at the Site. As part of the remedy selected for the Site, the extracted groundwater will continue to be treated to achieve the water quality standards established for the Site before use as a potable supply.

This revised O&M Manual supercedes the March 31, 1998 version.

1.1 Site Description

The Site, also known as the Saratoga Research and Development Center, is located on Plains Road in the Towns of Malta and Stillwater, Saratoga County, New York, approximately 1.5 miles south of Saratoga Lake and 2 miles north of Round Lake (**Figure 1**). The Site includes a square parcel of approximately 165 developed acres, known as the Test Station (**Figure 2**), which has been used as a research and development facility for rocket and weapons testing for more than fifty (50) years. The Test Station has thirty-three (33) buildings, numerous quench pits, leach fields, septic tanks, dry wells, storage areas, disposal areas, and a small man-made pond known as Muggett's Pond. A security fence surrounds the majority of the Test Station, which is currently owned by the Wright-Malta Corporation.

The areal extent of the groundwater contamination (i.e., the VOC plume) is below and immediately adjacent to the Test Station with the highest concentrations detected in the central portion of the Test Station.

1.2 Background

In July 1987, the Site was placed on the National Priorities List, and in September 1989, the United States Environmental Protection Agency (USEPA) issued a Unilateral Administrative Order (UAO) to Advanced Nuclear Fuels, Inc., Curtiss-Wright Corporation, General Electric Company (GE), Mechanical Technology, Inc. (MTI), New York State Energy Research and Development Authority (NYSERDA), Olin Corporation, Power Technologies, Inc. (PTI), and Wright-Malta Corporation as potentially responsible parties (PRPs). The UAO required that the PRPs conduct a Remedial Investigation (RI) and Feasibility Study (FS) at the Site.

In March 1990, GE, NYSERDA, and the United States Department of Defense (DOD) entered into a participation agreement and performed the RI and FS. The final RI was submitted to the USEPA on 14 February 1995 (ERM-Northeast, Inc., 1995a) and the final FS was submitted to the USEPA in October 1995 (Rust Environment and Infrastructure, Inc., 1995). On 18 July 1996, the USEPA issued a Record of Decision (ROD) which described the selected remedy for the Site. The remedy selected for the Site drinking water is continued treatment of the water pumped from two water supply wells by air stripping. In September 1997, the USEPA signed a Consent Decree[1] for implementation of the selected remedy.

The consent Decree requires the preparation of Remedial Action (RA) Reports, O&M Manuals, and the Notice of Completion Reports for each Remedial Work Element described in the Consent Decree. This is a revised O&M Manual for Remedial Work Element I – Drinking Water. A Remedial Design (RD) Report was previously prepared for this Remedial Work Element (ERM-Northeast, Inc., 1997). The USEPA approved RD Report is included as **Appendix C** of the Consent Decree.

1.3 Purpose and Scope

This O&M Manual provides guidance to personnel responsible for operating and maintaining two water supply wells, an air stripper, and settling tank, and a 100,000 gallon water storage tank at the Test Station as well as the piping and appurtenances associated with this equipment. This O&M Manual is intended to serve as the primary reference source for

[1] The Consent Decree was lodged on 5 January 1998 and was reportedly entered on 16 March 1998.

procedures relating to equipment maintenance, general operating procedures for the wells and air stripper, performance monitoring of the wells and air stripper, record keeping, and reporting.

This O&M Manual is considered supplementary to the operating, maintenance, and repair procedures recommended by the equipment manufacturer for each major item of equipment. Hence, this manual and the manufacturers' detailed technical literature for each component of the treatment and storage system compliment each other and provide maintenance personnel with information necessary to understand the basic procedures necessary to operate and maintain the system.

This manual does not provide information to deal with all possible situations. If any system failure occurs, the O&M Contractor under contract to the Performing Party (i.e., GE) will be contacted at its 24-hour emergency phone number. The USEPA and Wright-Malta Corporation will be provided with this contact information once the O&M Contractor has been selected, and with any change in the contact information thereafter.

In addition, the Project Coordinator can be contacted during normal business hours at the following address and phone:

Lewis S. Streeter
Remedial Project Manager
General Electric Company
320 Great Oaks Boulevard
Albany, New York 12203
(518) 862-2712

1.4 Description of Water Supply System

The Test Station water supply is derived from two private water supply wells (1D and 2D) located within the boundary of the Test Station (**Figure 1**). Both wells screen a lacustrine silty sand layer and both wells pump contaminated water, which is treated via air stripping prior to potable use at the Test Station. Well 1D is reported to be 82 feet deep and well 2D is reported to be 86.5 feet deep (C.T. Male Associates, P.C., 1979). A third well (3D), which screens the same silty sand layer, also exists at the Test Station, but this well is not used and will not be maintained under this O&M Manual.

Groundwater from the two water supply wells is pumped into the on-site air stripper and then flows by gravity into a 450 gallon stainless steel transfer/settling tank. This treated water is then pumped, using a float actuated submersible pump, from the stainless steel tank into a 100,000 gallon underground concrete reservoir. The treated water is then pumped into the water distribution system for the Test Station. This is illustrated schematically in **Figure 3**.

The water level in the 100,000 gallon reservoir is monitored using a float switch in a water level standpipe connected to the reservoir. The standpipe and the float switch are located in Building 15 (**Figure 2**). This float switch controls the submersible pumps in both wells, which operate simultaneously except during periods of pump maintenance. Two 15,000 gallon wooden tanks located in Building 15 also provide treated water storage for fire protection. These two 15,000 gallon tanks will be maintained by others, and are not included in the O&M requirements described in this manual. A process and instrumentation diagram (P&ID) of the Test Station drinking water supply and treatment system is shown as **Figure 3**.

1.5 Treatment System Modifications

Two significant sets of modifications have been performed at the site to facilitate O&M activities and improve system performance. Initial modifications were made during March 1998, with further upgrades of system monitoring capabilities and safety interlocks performed during October, 2001.

1.5.1 March 1998 System Modifications

The modifications performed during this period consisted of the following:

- Installation of flow meters on the influent lines from Wells 1D and 2D;
- Installation of a pressure transducer on the discharge side of the air blower;
- Duct work to connect the inlet side of the blower to outside air, rather than drawing in the air from inside Building 15;
- Installation of a high-level float switch on the transfer/settling tank; and
- Installation of a gravity flow bleed line from the header pipe of the air stripper to the stack to prevent freezing of the influent water in the portion of the header pipe above the roof line of Building 15.

The electronic components of items 1, 2 and 4 above were wired to a remote telemetry unit (RTU) which can signal operational problems via a telephone line to the Project Coordinator

and/or the O&M Contractor. The RTU also stores key operating data including totalizer readings and air stripper tower backpressure readings. This data is available for review after downloading from the RTU and opening the file in a Microsoft Access database environment.

Well 3D has also been deactivated. The electrical circuit for the sump motor has been tagged out and the influent line control valve has been locked and tagged out in the closed position.

1.5.2 October 2001 System Modifications

Further system modifications were performed during this period to allow for increased system reliability and to allow for better remote monitoring of system parameters. System modifications included the following:

- Installation of an electric-current monitor on the air stripper blower motor. In conjunction with the RTU, this monitor will not allow the system to operate without minimum current passing through the blower motor circuit.
- Installation of an air velocity transmitter in the air stripper blower intake duct. This transmitter will sense and record real-time air velocity readings. Review of air velocity data will allow project personnel to verify minimum air flow rates are being achieved to meet project discharge objectives.
- The air stripper tower high pressure alarm was reconfigured to halt system operation if alarm criteria are met.
- Key components of the treatment system influent manifold were replaced, including control valves, check valves, sample ports and system piping. Existing piping was judged to be brittle and subject to potential failure. System configuration and operating characteristics were not affected by the replacement of these components.

All system modifications are shown on the treatment system schematic in **Figure 3**. Equipment specifications are included in **Appendix A**. A complete electrical ladder diagram was developed based on October 2001 system modifications and is presented in **Figure 4**.

2.0 REGULATORY CONSIDERATIONS

In January 1987, an Oil Recovery Systems, Inc. (ORS) air stripper, Model 1109004, was installed by Wright-Malta Corporation to treat the Test Station drinking water supply. This air stripper was installed in Building 15. The air stripper was permitted by the New York State Department of Environmental Conservation (NYSDEC) and approved by the New York State Department of Health (NYSDOH) in January 1987, and it has been in operation since its installation. Since the Site is a Superfund site, permits are not required; however, the substantive requirements of any normally permittable activity must be achieved.

The influent and effluent to the air stripper was sampled sporadically from January 1987 through May 1990. From June 1990 through January 1995, influent and effluent water from the air stripper was sampled and analyzed monthly to monitor the performance of the air stripper. Since January 1995, following NYSDOH approval, monitoring has been conducted on a quarterly basis. The air stripper has been effective in reducing VOC concentrations below the performance standards specified in the Consent Decree for the Site. The performance standards are the applicable or relevant and appropriate requirements (ARARs) for drinking water set forth in the Record of Decision (ROD).

As of 30 May 1997, the Site public water supply was reclassified as a non-regulated water supply pursuant to Subpart 5-1 of the New York State Sanitary Code. Quarterly influent and effluent sampling, however, will still be conducted in order to document that the performance standards are being achieved.

3.0 SYSTEM OPERATION AND MONITORING

3.1 Description of System Operation

3.1.1 Groundwater Supply

Groundwater is pumped from the two supply wells through buried force mains, which enter at the rear of Building 15 (**Figure 2**). The submersible well pumps are designed to operate only when the low water level switch connected to the standpipe in Building 15 is activated. Under this condition, the two well pumps operate simultaneously until the water level increases to a height above the high water level switch in the standpipe.

Each well (including unused well 3D) is piped separately to Building 15. All three well lines include control valves and were formerly combined into a common header just upstream from the air stripper. During the October 2001 system modifications, the line from well 3D was isolated from the main system manifold. Prior to 1998 the flow rates from the wells were not metered; however, flow meters were installed in March 1998, and the flow rates for wells 1D and 2D are now metered and tracked as a part of system O&M. Total pumpage from both wells is currently estimated to be less than 1 gpm, although the maximum sustained yield for both wells is estimated to total 7 gpm.

The control valve for well 3D will remain locked in the OFF position. In addition, the pump motor switch for Well 3D shall remain turned off and tagged with a red "Danger-Do Not Operate" tag.

3.1.2 Groundwater Treatment System

Water pumped from wells 1D and 2D is passed through chlorinators at each wellhead and is then transmitted via underground piping to the rear (south) wall of Building 15. The chlorinators are not currently in use. However when they are in use they are maintained by others and are not covered by this O&M Manual. Within the building, the force mains from the wells (2 inch diameter Schedule 40 PVC piping) run in parallel until just before the air stripper. Well 1D and 2D pipes then combine into a common header that feeds the stripper column above the Building 15 roof line.

Each influent line contains flow control valves and check valves to provide for treatment of only one well discharge at a time or to allow for removal of the air stripper, should that be necessary.

The valves for wells 1D and 2D are operated in a restricted position to limit the instantaneous flow from each well to approximately 6.5 gpm, for a total instantaneous system flow of approximately 13 gpm. As mentioned previously, the control valve for well 3D discharge will remain locked in the closed position. The minimum and maximum allowable flow rates for the air stripper are 3 gpm and 25 gpm, respectively.

The single influent header distributes water across the top of the packing material in the stack via a specially designed spray nozzle. The packing material consists of hollow spherical polypropylene media designed to provide high void space and large surface area. As the water trickles downward through the packing material by gravity, a 1 horsepower (Hp) 500 cubic feet per minute (cfm) blower forces air upward through the water in order to strip out the VOC contaminants. The off-gas from the stripper is discharged to atmosphere through a 12 inch diameter, 17 foot high fiberglass reinforced plastic (FRP) stack in accordance with the substantive requirements of a NYSDEC air permit. The treated water is discharged by gravity from the base of the air stripper into the adjacent 450 gallon stainless steel settling tank.

3.1.3 Treated Water Storage

The treated water is pumped by a ½ Hp submersible pump from the settling tank to an underground concrete reservoir. The pump is controlled by a liquid level float switch. Provisions are also made to fill two aboveground 15,000 gallon wooden storage tanks located within Building 15. The two wooden tanks are filled manually and are used to supplement fire protection storage. These tanks are maintained by others and are not part of this O&M Manual.

Stored water is returned to Building 15 via underground piping where it enters the Test Station water distribution system. The water distribution system is maintained by others and is not included as a component of this O&M Manual.

3.2 System Controls

The treatment system operation is controlled at the pump ON-OFF switches and the air stripper RTU panel within Building 15, and at the individual well control panels. The well control panels receive information from the level probe located in Building 15 to control the operation of the water supply well pumps. The well pumps will not operate if the air blower is impaired. The air stripper blower is controlled by an ON-OFF switch located on a disconnect box mounted on the blower. The discharge pump is wired to an outlet slaved to the air stripper blower circuit.

Normal operation of the discharge pump is achieved only with the supply of power to the air stripper blower. Normally all switches will be set in the ON mode, except for well 3D. A drawing of the installed process control system is provided in **Figure 3**.

With well pump selectors in automatic mode and the air stripper blower in the ON mode, the reservoir level control will cycle well pumps on and off based on water levels in the reservoir. When either pump starts, the air stripper blower will also start. When well pumps stop, the air stripper blower will continue to run for approximately 15 minutes before stopping. This delay allows for the treatment of residual water which trickles down through the tower packing after well pumps cease operation. This delay interval can be adjusted with a control mounted on the building wall adjacent to the air stripper blower motor contactor. Restart of either pump during this timing period will cancel the air stripper blower shutdown.

The submersible pump in the settling tank will cycle on and off as directed by an internal level switch and will pump treated water to the 100,000 gallon concrete reservoir.

4.0 PERFORMANCE MONITORING OF TREATMENT SYSTEM

Performance monitoring of the treatment system involves measuring the flow rate from each well, measuring the blower air pressure, verifying the proper operation of the wells and the air stripper, and monitoring the water quality entering and exiting the air stripper. It also involves system checks to verify that appropriate O&M procedures are being performed to maintain the yield from the water supply wells and the treatment capacity of the air stripping system. Data to be recorded and maintained will be only the data necessary to check the system operation, to record operating conditions, or to provide data for determining system patterns (i.e., water usage and quality) and unusual trends or problems.

Analytical results on the air stripper influent and effluent will provide the best indicator about whether the treatment system is operating as intended. Should analytical data indicate reduced VOC removal from the groundwater, there may be a problem with the air stripper packing material becoming fouled. Such fouling may be caused by excessive biological growth or the accumulation of mineral deposits on the packing material. The rate of fouling could vary with environmental factors such as temperature and influent groundwater quality. Such potential problems would be shown by a gradual increase in VOCs in the effluent and/or an increase in blower air pressure.

The Process Operating Report (**Table 1**) shows those operational parameters which require routine monitoring and documentation. The Process Operating Report will be filled out on a monthly basis and also at the time of air stripper influent and effluent sampling. It is expected that quarterly monitoring will be sufficient in the future. However, more or less frequent recording may be necessary occasionally. Any apparent operating problems will be noted on the report. Significant problems will be reported promptly to the Project Coordinator, and corrective actions will be implemented as soon as practicable.

The Process Operating Report will be kept in a protective pocket or binder inside Building 15. When a report sheet is completely filled, a copy will be kept in the binder and the original will be sent to the Project Coordinator.

Note that the Process Operating Report may be updated in the event that there are modifications made to the water supply and treatment system.

4.1 Performance Specifications

Specific equipment and or component performance specifications have been developed to maintain effective system operation. Operation of system components within these performance specifications will assure that all treatment and discharge objectives are met and that the needs of the Test Station will be met by the drinking water system. System performance specifications have been summarized in the following table:

System Process Description	Performance Range	Performance Required for Instantaneous Flow of 13 GPM
Total System Influent Water Flow Rate (instantaneous)	Minimum: 3 gpm Maximum: 25 gpm*	NA
RW-1D Recovery Pump	Minimum: 3 gpm Maximum: 12.5 gpm	Minimum: 5.5 gpm Maximum: 6.5 gpm
RW-2D Recovery Pump	Minimum: 3 gpm Maximum: 12.5 gpm	Minimum: 5.5 gpm Maximum: 6.5 gpm
Total System Influent VOCs	Minimum: None Maximum: 400 ppb	Maximum: 400 ppb
Air Stripper Blower Time-Off Delay	Minimum: 10 minutes Maximum: 20 minutes	Minimum: 15 minutes
Air Stripper Blower Intake Velocity	153 fpm @ 3 gpm 1274 fpm @ 25 gpm	Minimum: 662 fpm**
Air Stripper Tower Back Pressure	Minimum: 1.0 "H_2O Maximum: 6.0" H_2O	Minimum: 1.0" H_20 Maximum: 6.0" H_2O
Air Stripper Blower Motor Operating Current	Minimum: 2 amperes Maximum: None	Minimum: 2 amperes Maximum: None
Building 15 Interior Temperature	Minimum: 33 Degrees F Maximum: None	Minimum: 33 Degrees F Maximum: None
RTU Control Panel Interior Temperature	Minimum: 40 Degrees F Maximum: 110 Degrees F	Minimum: 40 Degrees F Maximum: 110 Degrees F

NA – Not Applicable
* gpm – gallons per minute
** fpm – feet per minute

4.1.1 System Settings

As specified in the previous section, operation of the drinking water treatment system has been configured for a total system flow of approximately 13 gpm. Under certain conditions, select operational settings can be changed should site conditions warrant. It is important to consider the impact to total system operation when making changes. This will insure that the treatment system continues to meet treatment objectives while maintaining the desired flow to the Test Station. The following table outlines system settings which can be changed at the site and their potential affect on system operation. Settings which can be changed in the RTU software have not been listed here and should not be changed without a thorough review of the system settings and potential impacts to system operation.

System Setting	Potential Effect on System Operation
RW-1D Flow Rate	Do not exceed system capacity of 25 gpm or restrict to less than 3 gpm minimum system flow. Verify proper air/water ration is achieved when increasing system water flow. Minimum air/water ratio = 10:1 (cfm:gpm)
RW-2D Flow Rate	Do not exceed system capacity of 25 gpm or restrict to less than 3 gpm minimum system flow. Verify proper air/water ration is achieved when increasing system water flow. Minimum air/water ratio = 10:1 (cfm:gpm)
Air Stripper Blower Flow Rate	Blower must supply a minimum 10:1 air/water (cfm:gpm) ratio. There is no maximum allowable air flow rate.
Air Stripper Blower Low Pressure Alarm Set Point	Recommend current setting of 1" H_2O. May need adjustment if blower requires replacement. Raising or lowering set point may lead to false or missed system alarms.
Air Stripper Blower High Pressure Alarm Set Point	Recommend current setting of 6" H_2O. May need adjustment if blower requires replacement. Raising or lowering set point may lead to false or missed system alarms.
Air Stripper Blower Time Delay	Delay can be adjusted between zero and 20 minutes. Blower must be allowed to operate for a period after pumps cease operation to treat residual down-flow through the tower. Too short of a delay could result in under-treated water reaching the settling tank.

4.2 Influent/Effluent Sampling Requirements

The operation of the water treatment system includes groundwater influent and treated water effluent monitoring. Influent samples will be obtained at the sampling port located on the influent header piping to the air stripper. Effluent samples will be collected from the sample port downstream from the air stripper, prior to entry into the settling tank. This monitoring is needed to demonstrate that the performance standards are being achieved.

The influent and effluent will be sampled quarterly and these samples will be analyzed for the VOCs listed in **Table 2** using USEPA Method CLP OLC02 modified to include hexachlorobutadiene, 1,2,3 trichlorobenzene and trichlorofluoromethane. The additional parameters to be analyzed are compounds that have been used historically by Wright-Malta Corporation. **Table 3** summarizes the number of VOC samples to be collected during each sampling event, the type and size of sample containers, and preservation and holding time requirements. Additional sampling may be conducted as a contingency to check for other contaminants associated with NYSDOH monitoring requirements for drinking water supplies. A list of these contingency parameters is provided in **Table 4**. There is no requirement for monitoring air emissions.

All check lists and logging forms will be included in a binder within Building 15. Information logged will be provided to the Project Coordinator within each corresponding semi-annual status report.

4.3 Reporting

The laboratory analytical results from the quarterly influent and effluent sampling as well as other pertinent observations regarding the wells, the air stripper, and the storage tank operations will be submitted to the USEPA on a semi-annual basis. This information will be compiled and trends and/or procedural or system modifications will be discussed in the semi-annual Groundwater Treatment System Report. A sample report is included for reference in this O&M Manual as **Appendix B**. This report will also include details from the O&M activities completed for remedial work elements II and IV. This revised report format was approved in EPA correspondence dated September 29, 1999.

A Groundwater Treatment System Summary Report will be prepared at least once every five years. The summary reports will include a compilation of all analytical data, an assessment of the system performance, and a comparison of these data to the performance standards specified in the ROD. In addition, these reports will include discussions of modifications made or proposed to be made to the system.

5.0 MAINTENANCE MANAGEMENT

5.1 General Requirements

Essential to the successful and economical operation of the water supply and treatment system is the regular and systematic maintenance of equipment, piping, and system controls. Routine preventive maintenance of mechanical equipment will assure optimum equipment performance and reduce the frequency of equipment breakdown and interruptions to the treatment processes. Essential to good maintenance is the establishment of, and adherence to, a realistic maintenance program and schedule.

This section is intended to provide O&M personnel with the basic systems and procedures necessary to maintain the water supply and treatment system in a good operating condition. It does not attempt to show step-by-step inspection, disassembly, adjustment, lubrication, or other maintenance details for specific items of equipment. The manufacturer's operation and maintenance manuals furnished with the equipment should be consulted for these details. The O&M manual prepared by ORS of Greenville, New Hampshire for the air stripper is included with this document as **Appendix C**. The systems and procedures outlined in this chapter, however, when properly implemented and routinely followed, will assure that the water supply and treatment system performs its design functions at high efficiency and with minimum interruptions or breakdown.

5.2 Project Documents

A variety of standard operating procedures (SOPs), checklists and project drawings are regularly utilized for the project. An annual review of these project documents will be performed to insure that. The documents accurately reflect actual practices required to maintain effective system operation. Current project drawings and documents reflect as-built conditions as of November 2001.

5.2.1 Equipment Log

A logbook will be kept at Building 15 and will be filled out every time maintenance is performed on the system. The log form will indicate the date, name of maintenance personnel, operational status of the system, piece(s) of equipment worked on, description of actions taken and the reason(s) such actions were required. A blank copy of the log form is provided as **Table 5**.

5.3 Planning and Scheduling

5.3.1 General

Maintenance work on the water supply and treatment system may be either preventive maintenance or corrective maintenance. Preventive maintenance consists of those routine, recurring tasks performed periodically on equipment and appurtenances such as inspection, adjustment, cleaning, minor repairs, etc. Corrective maintenance is synonymous with repair and is the restoration of a system or equipment item to a condition substantially equivalent to its original design capacity and efficiency through parts replacement, component cleaning, overhaul, or rebuilding.

The best sources of specific information on the performance of preventive maintenance tasks and recurring cleaning or lubrication procedures on the treatment system equipment are the manufacturer's O&M manuals and service bulletins provided for each piece of equipment. To this end, O&M personnel should assure that these technical documents are complete, current and are properly protected from damage or loss. A complete copy of this O&M manual should be stored at the project site for reference purposes.

Selected maintenance tasks will be performed at varying frequencies based on historical operating trends. At a minimum, monthly O&M visits will be performed to monitor system performance and to check for proper operation of system components. Other tasks will be required less frequently based on operating experience.

5.3.2 Preventive Maintenance Program

The preventive maintenance program consists of a preventive maintenance task list for each item of system equipment and for each non-equipment system component (i.e., vaults, manholes, piping components, etc.) requiring periodic servicing and a preventive maintenance schedule. The development of a long-term preventive maintenance program should be based on the manufacturer's O&M literature (**Appendices A** and **C**) and on-going experience obtained

in operating and maintaining the system. However, for the convenience of O&M personnel, an initial maintenance checklist has been prepared as **Table 6**. This checklist is intended only as a guideline for starting a preventive maintenance program for the water supply and treatment system. It should be noted that the checklist will be updated and revised periodically based on actual experience gained in running the system.

5.3.3 Monthly System Maintenance

This section should be used as a general guide only and should not be considered as a substitute for the more comprehensive information contained in the manufacturer's technical documents.

5.3.3.1 Flow Control Valves & Process Line Check Valves

The control valves in use require no lubrication or packing and a minimum of maintenance. However, a periodic (monthly) inspection will be performed to determine how the water handled is affecting the efficiency of the valve assembly. The primary intent is to check for leaks in and around the valves, especially on the influent lines. All process piping associated with the drinking water system should also be checked at this time for leaks or other discernable problems.

5.3.3.2 Groundwater Recovery Pumps & Totalizers

During each monthly visit, recovery pumps should be operated if the system is found to be idle on arrival. Each pump should be checked for proper flow volume. Readings should be collected from each totalizer during monthly visits to record instantaneous and cumulative flows.

5.3.3.3 Air Stripper

The air stripper unit and its components require periodic inspection and cleaning. Frequency of cleaning will be determined in the field (as necessary). The air stripper unit should be checked for leaks, cracks or other signs of physical deterioration. The air stripper sump sight tube should be checked for build-up and cleaned if necessary. Blower intake ducting should be checked for competency and the intake screen should be checked for obstructions. The packing material will be inspected for fouling and discolorization which could indicate biological or inorganic fouling (annual inspection only).

5.3.3.4 Treated Water Discharge Pump & Settling Tank

The submersible discharge pump requires no lubrication. Periodic inspection will be made to insure that the specified flow is provided and that the pump is not overheating. Proper operation of the internal level sensor in the discharge pump should allow for a maximum settling tank level of 18 inches. Depths greater than 18 inches indicate a loss of proper function of the pump and corrective action should be taken. The settling tank should be checked for the accumulation of sands or sediments. The tank interior should be visually inspected for signs of corrosion or presence of foreign matter.

5.3.3.5 System Interlocks

System alarms and interlocks should be checked monthly to insure proper operation. Monthly testing should include the following alarms or interlocks:

System Alarm or Interlock	Test Procedure	Desired Result
Air Stripper Tower Low Pressure	Disconnect tubing from air stripper tower.	Recovery pumps shut down after 15 second delay. System alarm registered on RTU.
Settling Tank High Level	Raise settling tank high level switch.	Recovery pumps shut down after 15 second delay. System alarm registered on RTU.
Air Stripper Blower Motor Low Current Alarm	Manually switch off air stripper blower.	Recovery pumps shut down after 15 second delay. System alarm registered on RTU.
Building 15 Low Temperature Alarm	Manually increase temperature setting above ambient.	System alarm registered on RTU.
Reservoir Level Switch (System Idle)	Manually depress float switch in housing.	Pumps and air stripper blower activate
Reservoir Level Switch (System Active)	Close valve on housing feed line. Pour in enough potable water to raise float to on position.*	Pumps de-activate. Air stripper blower shuts off after 15 minute delay.

* - Be sure to re-open valve after test to restore normal operation of level switch.

5.3.4 Quarterly System Maintenance

Of primary importance in quarterly system maintenance is the collection of performance water samples from the air stripper influent and effluent. Analytical results of these samples will allow for the evaluation of the air stripper to determine if treatment objectives are being achieved.

5.3.5 Annual System Maintenance

Several system components require an annual inspection to document their condition. These include the following:

5.3.5.1 Groundwater Pumps

The water supply well pumps will be checked at least annually to verify operational performance. Under no circumstances should the pumps be operated for any prolonged periods of time with their discharge valves closed. This can result in motor and pump damage due to overheating. If a pump fails to operate, or there is a loss of performance, refer to the trouble shooting guide in the manufacturer's O&M literature.

The pumps will be removed from the wells annually (or more frequently as problems occur) to check for signs of inorganic or biological fouling, and for impeller wear. If significant fouling occurs, notify the Project Coordinator and schedule cleaning or replacement activities.

The condition of the wells and associated vault structures should also be reviewed during the annual inspection.

5.3.5.2 100,000 Gallon Reservoir

Inspection of the 100,000 gallon reservoir should be performed on an annual basis. Project personnel must adhere to all requirements for Confined Space Entry when entering the reservoir for a visual inspection. Conditions to be noted include interior condition of all surfaces, presence of any foreign matter or growth in the reservoir, and any vegetative growth on or around the reservoir which could contribute to a compromise of the reservoir as a potable water storage supply. During the inspection, the reservoir level should be lowered a minimum of five feet to allow access by personnel to the interior. Water can be removed utilizing a surface mounted pump and discharged to the south, off of the reservoir, down the adjacent hillside. Care must be taken to avoid erosion during any overland flow of water.

5.3.5.3 Settling Tank

The stainless steel settling tank is inspected monthly but also requires annual maintenance and inspection. Cleaning of sandy sediments from the tank is typically required annually. Personnel should utilize protective clothing to maintain the cleanliness of the tank interior. A shop vac can be utilized to remove accumulated sand and sediment from the tank bottom. A careful inspection of the tank interior should also be performed at this time to anticipate any future problems with the integrity of the tank.

5.3.5.4 Air Stripper Blower Motor

The operation of the air stripper blower motor should be checked thoroughly during the annual maintenance inspection. Amperage draw readings should be taken at this time to document that the blower motor is operating below nameplate values. The maximum operating amperage for the existing air stripper blower motor is 5.5 amps. Historical monitoring has shown the motor to operate at approximately 3.5 amps during warm weather conditions. Values may increase during cold weather operation. The motor should also be inspected for signs of bearing failure, along with visual signs of deterioration, including cracked or frayed power cords, corrosion etc.

5.3.5.5 Air Stripper Tower Packing, Spray Nozzle and Mist Eliminator

Annual access to the top of the air stripper tower is necessary to inspect select components located at the air stripper tower discharge point. A bucket lift is recommended to avoid fall protection issues raised by access via the Building 15 roof. Components to be inspected include the air stripper spray nozzle and mist eliminator pad. The spray nozzle should be clear of any buildup or obstructions that could inhibit proper spray pattern into the tower packing. The mist eliminator should be free of visible biological growth and without visible defects or deterioration of the mesh material. The tower packing should also be inspected at this time for fouling, scale buildup or any other signs of deterioration that could reduce the efficiency of the air stripper unit.

5.3.6 Corrective Maintenance

Corrective maintenance is defined as the work required to accomplish major repairs and non-routine maintenance procedures. Planning and scheduling of maintenance work must make provisions to handle these non-recurring functions.

Although actual equipment breakdown may precede the planning of corrective maintenance, this resort to "breakdown" maintenance may cause disruptions in the water supply and

treatment process and costly priority repair work. Accordingly, it is desirable to use anticipatory methods to plan corrective maintenance. These methods include periodic inspections of equipment, close review of equipment operating records, operator observations, and notations in the logbooks and other analyses for the timely identification of impending problems.

5.4 Spare Parts Inventory

A list of spare parts has been established in the event that operating personnel find the need to repair or replace select system components. Parts which have been identified as critical components have been purchased and kept in inventory at the site. These are parts or components which are critical to system operation and may not be readily available should the need arise. A complete listing of all spare parts, including those inventoried at the site has been included as **Table 7**. The on-site inventory of applicable parts or components should be reviewed by operations personnel at least annually.

5.4.1 Replacement Parts and Components

Should the need arise to install replacement parts or components, exact replacements must be utilized. If exact replacements are not available or feasible for use, a review must be conducted prior to any changes to determine the potential impacts on system operation. Any use of non-exact replacement parts must also be documented and applicable project documents updated.

6.0 QUALITY ASSURANCE AND HEALTH AND SAFETY

Site operations related to the tasks described in this manual shall be conducted consistent with the Quality Assurance Project Plan (QAPP) and Health and Safety Plan (HASP), attached as **Appendices D** and **E**, respectively. Note that USEPA's SOP HW-13, Revision 1 ("Organic Data Review for Low Concentration Water, October 1992") will be used as guidance in validating analytical data in lieu of SOP HW-6 referenced in the QAPP. The QAPP is designed to assure that appropriate procedures are followed during sampling and testing for environmental data. The HASP provides procedures for use by O&M personnel to minimize the risk of accidents from physical hazards and the potential for worker exposure to chemical contaminants. Various USEPA-approved changes have been made to the initial QAPP and HASP documents. These are provided for reference in **Appendix F**.

The O&M Contractor shall prepare its own project-specific HASP, which will be submitted to USEPA for placement in its files. Said HASP will be at least as stringent as the HASP attached as **Appendix E**, as amended by any USEPA-approved changes provided in **Appendix F**. Because the well vaults and 100,000 gallon reservoir are considered confined spaces, the O&M Contractor's HASP shall also include a Confined Space Entry Plan prepared in accordance with OSHA regulations. This Confined Space Entry Plan shall be at least as stringent as that provided in **Appendix E**.

Special attention shall be provided to the potential of contaminant contact with exposed skin and inhalation of contaminated particles and/or vapors during repair work on the system plumbing. An action level of 2 parts per million (ppm) above background in the worker's breathing zone has been established for the Site based on the presence of carbon tet, a VOC found in groundwater at the Site. Historical VOC analytical results dating from January 1987 through April 1997 are included in **Table 2** as a reference for O&M personnel. Some additional precautions are noted below:

- Level D protection should be expected as a minimum when performing maintenance on the system.
- Use care in handling heavy product drums and equipment.
- Personnel entering the concrete reservoir and the well vaults must follow all OSHA regulations and guidelines for confined space entry.

The O&M Contractor's HASP shall include a Confined Space Entry Plan which meets the requirements of applicable OSHA regulations.

The noise levels inside Building 15 during system operation are expected to be relatively low. Personnel should not be required to wear forms of hearing protection during routine inspections and maintenance.

Electrical maintenance and repairs will be performed only by qualified personnel. Specific safe practices for working with electrical equipment are as follows:

- Do not ground yourself in water or on pipes or drains.
- Positively "lockout" appropriate circuit breakers and disconnect switches, and test the circuit before working on electrical equipment.
- Test power leads at the equipment with a voltmeter before contacting any normally energized component.
- Keep all electrical controls accessible and well marked.
- Never use metal ladders around electrical equipment.
- Handle breaker wires as though they are "live" wires.
- When there is a question about any electrical hazard, ask a knowledgeable person before you expose yourself to it.
- Ground all electric tools and equipment.

7.0 CONTINGENCY PLANS

Future uses of the Test Station may put demands on the water supply system that are different from current demands. At present, there are less than 25 persons served by less than 5 active service connections at the Test Station, as reported by Wright-Malta Corporation. Accordingly, the Test Station is now filed by the NYSDOH as a non-regulated facility.

7.1 Increased Water Demand

The water system draws water from two groundwater wells which currently have an estimated combined withdrawal of less than 1 gpm. The maximum sustained combined yield is reported to be 7 gpm. The treatment capacity of the air stripper is 25 gpm. The Performing Party (i.e., GE) has the obligation to maintain these water supply and treatment capacities.

Should activities at the Test Station result in increased water demand, the two wells would be pumped up to the maximum sustained yield rate (expected to be 7 gpm) to satisfy the demand. At this rate, approximately 10,000 gallons of treated water could be consumed and/or stored daily. The air stripper has the capacity to treat up to 25 gpm or 36,800 gallons of water daily, at design efficiency. At no time will the combined peak pumping rate of the wells exceed 25 gpm. Increased demand would result in additional maintenance costs, additional power usage to operate the system pumps and blower, and additional chlorine usage at the wellheads. In addition, the need for spare parts to be inventoried at the site may be affected by increased system demand. **Table 7** should be re-evaluated with any significant increase in system demand. The Performing Party is not obligated to provide water from sources other than the two operating wells. Should other parties elect to install and operate additional water supply sources (i.e., wells or water mains), the Performing Party will continue to operate the air stripper up to the maximum design capacity of 25 gpm.

7.2 Decreased (Zero) Water Demand

With a shut down of the Test Station, the demand for treated water would be zero. With zero demand, the air stripper treatment system will be shut off at the circuit breaker. The float probe

that calls for water from the supply wells will also be turned off so that no untreated water enters the reservoir (and hence the Site water distribution system). The air stripper, settling tank and the concrete reservoir will be drained.
Shut down will include the following:

- Turn air stripper circuit breaker to OFF.
- Close valves into the air stripper and drain the air stripper and internal lines.
- Cover the top of the air stripper to protect the packing material and to reduce heat loss.
- Turn discharge pump circuit breaker to OFF, and drain and clean the settling tank and the discharge pump.
- Maintain heat in Building 15.

Periodic inspection of the water supply wells, influent and effluent water lines, air stripper and concrete reservoir will continue by the Performing Party to ensure that the system is capable of being restarted should conditions change at the Test Station. Such inspection will be conducted on an annual basis, but may be more frequent if problems are encountered or inspections indicate potential concerns. In addition, the two operating water supply wells will be pumped on a semi-annual basis to exercise the pumps and to collect samples for analysis of VOCs. Samples will be collected from tees installed on the influent lines within Building 15.

7.3 Transition of Operations Contractor

A plan should be developed should the need arise to transfer O&M duties to an alternate contractor. The transfer of O&M responsibilities should be preceeded by a meeting with the Project Coordinator, the current Operations Contractor and the new Operations Contractor. All operating functions and maintenance procedures should be carefully reviewed by the incoming Operations Contractor. The current Operations Contractor will relinquish all operating data and associated software for operation of the RTU. The current Operations Contractor should provide on-site training for new personnel until the incoming Operations Contractor is fully able to operate and maintain the treatment system.

8.0 REFERENCES

C.T. Male Associates, 1979, Engineering Planning Study, Saratoga Research and Development Center, Malta, New York, July 1979.

ERM-Northeast, Inc., 1995a, Final Remedial Investigation Report, Malta Rocket Fuel Area Site, Towns of Malta and Stillwater, Saratoga County, New York, February 1995

ERM-Northeast, Inc., 1995b, Sampling and Analysis Plan, Early Warning Monitoring System, Towns of Malta and Stillwater, Saratoga County, New York, February 1995.

ERM-Northeast, Inc., 1997, Remedial Design Report, Remedial Work Element I – Drinking Water, Malta Rocket Fuel Area Site, August 25, 1997.

Rust Environment and Infrastructure, Inc., 1995, Feasibility Study, Malta Rocket Fuel Area Site, Saratoga County, New York, October 1995.

USEPA, 1996, Record of Decision, Malta Rocket Fuel Area Site, Towns of Malta and Stillwater, Saratoga County, New York, August 1996.

USEPA, 1997, Consent Decree, Malta Rocket Fuel Area Site, Towns of Malta and Stillwater, Saratoga County, New York.

TABLES

TABLE 1 - SHEET 1/2
PROCESS OPERATING REPORT
WATER TREATMENT SYSTEM
MALTA ROCKET FUEL AREA SITE

1	2	3					4					5
DATE	TIME	WATER FLOW --LINE 1D					WATER FLOW --LINE 2D					PROBLEMS OR COMMENTS
		1D LINE FLOW METER RDG(GPM)	1D LINE TOTALIZER RDG(GAL)	ELAPSED TIME (DAYS)	TOTAL FLOW THIS PERIOD (GAL)	AVG FLOW THIS PERIOD (GPM)	2D LINE FLOW METER RDG(GPM)	2D LINE TOTALIZER RDG(GAL)	ELAPSED TIME (DAYS)	TOTAL FLOW THIS PERIOD (GAL)	AVG FLOW THIS PERIOD (GPM)	
Summary												

IT Corporation
A Member of The IT Group

TABLE 1 - SHEET 2/2
PROCESS OPERATING REPORT
WATER TREATMENT SYSTEM
MALTA ROCKET FUEL AREA SITE

1	2	3			4	5
DATE	TIME	STANDPIPE LEVEL (FT)	LEVEL PROBE OK ?	SAMPLES TAKEN ?	AIR BLOWER PRESSURE OK?	PROBLEMS OR COMMENTS

IT Corporation
A Member of The IT Group

TAB[illegible]2

MALTA ROCKET FUEL AREA SITE

WRIGHT-MALTA AIR STRIPPER ANALYTICAL RESULTS

VOLATILE ORGANIC COMPOUNDS

Air Stripper (Influent)	1/87	3/87	6/87	4/90	6/90	7/90	8/90	9/90	10/90	11/90	12/90	2/91	3/91	4/91	5/91
Bromodichloromethane	NR	NR	NR	ND	0.6	0.6	ND	0.6	0.6	ND	ND	ND	ND	ND	ND
Dibromochloromethane	NR	NR	NR	ND	ND	ND	ND	ND	0.6	0.7	ND	ND	ND	ND	ND
Carbon Tetrachloride	130	140	120	108	37	52	115	125	149	124	147	96	107	69	72
Chloroform	9.8	12	13	11	5	6	9	13	14	13	14	15	11	9	5
Tetrachloroethene	NR	NR	NR	ND	ND	ND	ND	0.6	ND	ND	ND	ND	ND	ND	ND
Trichloroethene	50	63	74	49	29	30	17	39	37	42	34	49	65	61	36
Trichlorofluoromethane	NR	NR	NR	ND	ND	ND	ND	ND	ND	ND	ND	ND	ND	ND	ND

Air Stripper (Effluent)															
Benzene	NR	NR	NR	ND	ND	ND	ND	ND	ND	ND	ND	ND	ND	ND	ND
Bromodichloromethane	NR	NR	NR	ND	0.6	ND	ND	0.6	ND	0.5	ND	ND	ND	ND	ND
Dibromochloromethane	NR	NR	NR	ND	MD	ND	ND	ND	ND	ND	ND	ND	ND	ND	ND
n-Butylbenzene	NR	NR	NR	ND	ND	ND	ND	ND	ND	ND	ND	ND	ND	ND	ND
Dibromochloromethane	NR	NR	NR	ND	0.6	ND	ND	ND	ND	ND	ND	ND	ND	ND	ND
Carbon Tetrachloride	2.8	2.5	3.6	4	0.8	0.6	1	1	2	3	4	2	3	1	0.5
Chloroform	ND	ND	0.11	1	1	4	ND	ND	0.9	ND	2	1	2	0.7	ND
p-Cymene	NR	NR	NR	ND	ND	ND	ND	ND	ND	ND	ND	ND	ND	ND	ND
Ethylbenzene	NR	NR	NR	ND	ND	ND	ND	ND	ND	ND	ND	ND	ND	ND	ND
Napthalene	NR	NR	NR	ND	ND	ND	ND	ND	ND	ND	ND	ND	ND	ND	ND
Toluene	NR	NR	NR	ND	ND	ND	ND	ND	ND	ND	ND	ND	ND	ND	ND
Tetrachloroethylene	1.5	ND	ND	ND	ND	ND	ND	ND	ND	ND	ND	ND	ND	ND	ND
Trichloroethene	ND	2.8	1.3	ND	1	0.7	ND	2	0.9	1	2	2	3	1	ND
1,2,4-Trimethylbenzene	NR	NR	NR	ND	ND	ND	ND	ND	ND	ND	ND	ND	ND	ND	ND
1,3,5-Trimethylbenzene	NR	NR	NR	ND	ND	ND	ND	ND	ND	ND	ND	ND	ND	ND	ND
m-Xylene	NR	NR	NR	ND	ND	ND	ND	ND	ND	ND	ND	ND	ND	ND	ND
o-Xylene	NR	NR	NR	ND	ND	ND	ND	ND	ND	ND	ND	ND	ND	ND	ND
p-Xylene	NR	NR	NR	ND	ND	ND	ND	ND	ND	ND	ND	ND	ND	ND	ND

Notes:

1. All concentrations are in micrograms per liter (ug/l = parts per billion (ppb)).
2. ND = Not detected.
3. NR = Not Reported.

IT Corporation
A Member of The IT Group

TAB 2

MALTA ROCKET FUEL AREA SITE

WRIGHT-MALTA AIR STRIPPER ANALYTICAL RESULTS

VOLATILE ORGANIC COMPOUNDS

Air Stripper (Influent)	6/91	7/91	8/91	9/91	10/91	11/91	12/91	1/92	2/92	3/92	4/92	5/92	6/92	7/92	8/92
Bromodichloromethane	ND	ND	ND	ND	ND	ND	ND	ND	ND	ND	ND	ND	ND	ND	ND
Dibromochloromethane	ND	ND	ND	ND	ND	ND	ND	ND	ND	ND	ND	ND	ND	ND	ND
Carbon Tetrachloride	85	62	79	68	45	45	40	43	33	23	65	32	96	64	65
Chloroform	10	6	7	7	5	5	6	4	2	4	7	5	12	8	7
Tetrachloroethene	ND	ND	ND	ND	ND	ND	ND	ND	ND	ND	ND	ND	ND	ND	ND
Trichloroethene	38	42	35	50	47	42	44	44	32	27	56	44	83	37	39
Trichlorofluoromethane	ND	ND	ND	ND	ND	ND	ND	ND	ND	ND	ND	0.7	ND	1	ND

Air Stripper (Effluent)															
Benzene	ND	ND	ND	ND	ND	ND	ND	ND	ND	ND	ND	ND	ND	ND	ND
Bromodichloromethane	ND	ND	ND	ND	ND	ND	ND	ND	ND	ND	ND	ND	ND	ND	ND
Dibromochloromethane	ND	ND	ND	ND	ND	ND	ND	ND	ND	ND	ND	ND	ND	ND	ND
n-Butylbenzene	ND	ND	ND	ND	ND	ND	ND	ND	ND	ND	ND	ND	ND	ND	ND
Dibromochloromethane	ND	ND	ND	ND	ND	ND	ND	ND	ND	ND	ND	ND	ND	ND	ND
Carbon Tetrachloride	1	ND	0.5	0.5	ND	0.5	ND	0.5	ND	ND	ND	ND	0.5	ND	ND
Chloroform	0.9	ND	ND	ND	ND	ND	ND	ND	ND	ND	ND	0.9	ND	ND	ND
p-Cymene	ND	ND	ND	ND	ND	ND	ND	ND	ND	ND	ND	ND	ND	ND	ND
Ethylbenzene	ND	ND	ND	ND	ND	ND	ND	ND	ND	ND	ND	ND	ND	ND	ND
Napthalene	ND	ND	ND	ND	ND	ND	ND	ND	ND	ND	ND	ND	ND	ND	ND
Toluene	ND	ND	ND	ND	ND	ND	ND	ND	ND	ND	0.6	ND	1	1	ND
Tetrachloroethylene	ND	ND	ND	ND	ND	ND	ND	ND	ND	ND	ND	ND	ND	ND	ND
Trichloroethene	1	0.6	0.6	0.9	0.9	1	1	1	ND	ND	ND	1	1.2	ND	ND
1,2,4-Trimethylbenzene	ND	ND	ND	ND	ND	ND	ND	ND	ND	ND	ND	ND	0.9	0.7	ND
1,3,5-Trimethylbenzene	ND	ND	ND	ND	ND	ND	ND	ND	ND	ND	ND	ND	ND	ND	ND
m-Xylene	ND	ND	ND	ND	ND	ND	ND	ND	ND	ND	ND	ND	0.9	0.9	ND
o-Xylene	ND	ND	ND	ND	ND	ND	ND	ND	ND	ND	ND	ND	ND	ND	ND
p-Xylene	ND	ND	ND	ND	ND	ND	ND	ND	ND	ND	ND	ND	0.9	0.9	ND

Notes:

1. All concentrations are in micrograms per liter (ug/l = parts per billion (ppb)).
2. ND = Not detected.

IT Corporation
A Member of The IT Group

TAB[illegible]2

MALTA ROCKET FUEL AREA SITE
WRIGHT-MALTA AIR STRIPPER ANALYTICAL RESULTS
VOLATILE ORGANIC COMPOUNDS

Air Stripper (Influent)	9/92	10/92	11/92	12/92	1/93	2/93	3/93	4/93	5/93	6/93	7/93	8/93	9/93	10/93	11/93
Bromodichloromethane	1	ND	ND	ND	ND	ND	ND	ND	0.8	1	ND	ND	ND	ND	ND
Dibromochloromethane	ND	ND	ND	ND	ND	ND	ND	ND	ND	ND	ND	ND	ND	ND	ND
Carbon Tetrachloride	34	20	100	62	37	21	51	60	59	41	49	52	35	42	76
Chloroform	7	2	8	ND	4	2	5	6	7	7	4.5	7	ND	3	6
Tetrachloroethene	ND	ND	ND	ND	ND	ND	ND	ND	ND	ND	ND	ND	ND	ND	ND
Trichloroethene	44	31	68	46	36	27	44	44	49	42	34	38	34	34	40
Trichlorofluoromethane	ND	ND	ND	ND	ND	ND	0.6	1	2	ND	ND	1	ND	0.9	ND

Air Stripper (Effluent)															
Benzene	ND	ND	ND	ND	2	ND	ND	ND	ND	ND	ND	ND	ND	ND	ND
Bromodichloromethane	1	ND	ND	ND	ND	ND	ND	ND	0.6	ND	ND	ND	ND	ND	ND
Dibromochloromethane	ND	ND	ND	ND	ND	ND	ND	ND	ND	ND	ND	ND	ND	ND	ND
n-Butylbenzene	ND	ND	ND	ND	ND	ND	ND	ND	ND	0.5	ND	ND	ND	ND	ND
Dibromochloromethane	ND	ND	ND	ND	ND	ND	ND	ND	ND	ND	ND	ND	ND	ND	ND
Carbon Tetrachloride	ND	ND	1	ND	ND	ND	0.6	0.6	0.7	ND	ND	ND	ND	ND	0.9
Chloroform	3	ND	ND	ND	ND	ND	ND	0.7	1	0.7	ND	0.6	ND	ND	ND
p-Cymene	ND	ND	ND	ND	ND	ND	ND	ND	ND	ND	ND	ND	ND	ND	ND
Ethylbenzene	ND	ND	ND	ND	2	ND	ND	ND	ND	ND	ND	ND	ND	ND	ND
Napthalene	ND	ND	ND	ND	1	ND	ND	ND	ND	0.6	ND	ND	ND	ND	ND
Toluene	1	ND	1	ND	13	1	ND	ND	ND	0.8	ND	0.8	ND	ND	ND
Tetrachloroethylene	ND	ND	ND	ND	ND	ND	ND	ND	ND	ND	ND	ND	ND	ND	ND
Trichloroethene	ND	0.8	2	1	1	ND	2	ND	1	0.5	ND	0.5	1	0.7	1.4
1,2,4-Trimethylbenzene	0.6	ND	ND	ND	6	ND	ND	ND	ND	0.5	ND	ND	ND	ND	ND
1,3,5-Trimethylbenzene	ND	ND	0.5	ND	2	ND	ND	ND	ND	0.6	ND	ND	ND	ND	ND
m-Xylene	0.9	ND	ND	ND	ND	ND	ND	ND	ND	ND	ND	0.6	ND	ND	ND
o-Xylene	ND	ND	0.5	ND	5	ND	ND	ND	ND	ND	ND	0.6	ND	ND	ND
p-Xylene	0.9	ND	1.5	ND	11	ND	ND	ND	ND	0.8	ND	0.6	ND	ND	ND

Notes:
1. All concentrations are in micrograms per liter (ug/l = parts per billion (ppb)).
2. ND = Not detected.

IT Corporation
A Member of The IT Group

TABL

MALTA ROCKET FUEL AREA SITE
WRIGHT-MALTA AIR STRIPPER ANALYTICAL RESULTS
VOLATILE ORGANIC COMPOUNDS

Air Stripper (Influent)	12/93	1/94	2/94	3/94	4/94	5/94	6/94	7/94	8/94	9/94	10/94	11/94	12/94	1/95	4/95
Bromodichloromethane	ND	ND	ND	ND	ND	1.3	0.8	ND	ND	0.9	0.6	ND	1	1.1	ND
Dibromochloromethane	ND	ND	ND	ND	ND	ND	ND	ND	ND	ND	ND	ND	ND	1.2	ND
Carbon Tetrachloride	59	38	38	45	36	55	26	25	34	30	48	45	31	43	24
Chloroform	6	4.6	4	4	4.1	8	3.6	2.5	4.8	4.3	4.1	4	1	4.9	1
Tetrachloroethene	ND	ND	ND	ND	ND	ND	ND	ND	ND	ND	ND	ND	ND	ND	ND
Trichloroethene	35	36	36	36	30	33	26	23	24	27	31	27	25	26	23
Trichlorofluoromethane	1	ND	1	ND	ND	ND	ND	ND	ND	ND	ND	ND	ND	ND	ND

Air Stripper (Effluent)															
Benzene	ND	ND	ND	ND	ND	ND	ND	ND	ND	0.6	ND	ND	ND	ND	2
Bromodichloromethane	ND	ND	ND	ND	ND	ND	0.8	ND	ND	ND	ND	ND	1	1.1	ND
Dibromochloromethane	ND	ND	ND	ND	ND	ND	ND	ND	ND	ND	ND	ND	ND	1.1	ND
n-Butylbenzene	ND	ND	ND	ND	ND	ND	ND	ND	ND	ND	ND	ND	ND	ND	ND
Dibromochloromethane	ND	ND	ND	ND	ND	ND	ND	ND	ND	ND	ND	ND	ND	ND	ND
Carbon Tetrachloride	1	ND	0.6	ND	ND	ND	ND	ND	ND	ND	ND	ND	ND	0.6	ND
Chloroform	0.5	ND	ND	ND	0.7	3.8	2.2	ND	0.8	1.2	0.6	ND	ND	1.3	ND
p-Cymene	ND	ND	ND	ND	ND	ND	ND	ND	ND	ND	ND	ND	ND	ND	ND
Ethylbenzene	ND	ND	ND	ND	ND	ND	ND	ND	ND	ND	ND	ND	ND	ND	1
Napthalene	ND	ND	ND	ND	ND	ND	ND	ND	ND	ND	ND	ND	ND	ND	ND
Toluene	ND	ND	ND	ND	ND	ND	ND	ND	ND	ND	ND	ND	ND	ND	7
Tetrachloroethylene	ND	ND	ND	ND	ND	ND	ND	ND	ND	ND	ND	ND	ND	ND	ND
Trichloroethene	1	1.2	1	0.6	1.2	0.9	0.9	0.6	ND	0.8	1.2	0.5	1	0.8	0.9
1,2,4-Trimethylbenzene	ND	ND	ND	ND	ND	ND	ND	ND	ND	ND	ND	ND	ND	ND	3
1,3,5-Trimethylbenzene	ND	ND	ND	ND	ND	ND	ND	ND	ND	ND	ND	ND	ND	ND	0.8
m-Xylene	ND	ND	ND	ND	ND	ND	ND	ND	ND	ND	ND	ND	ND	ND	ND
o-Xylene	ND	ND	ND	ND	ND	ND	ND	ND	ND	ND	ND	ND	ND	ND	2
p-Xylene	ND	ND	ND	ND	ND	ND	ND	ND	ND	ND	ND	ND	ND	ND	5

Notes:
1. All concentrations are in micrograms per liter (ug/l = parts per billion (ppb)).
2. ND = Not detected.

IT Corporation
A Member of The IT Group

TABLE 2

MALTA ROCKET FUEL AREA SITE

WRIGHT-MALTA AIR STRIPPER ANALYTICAL RESULTS

VOLATILE ORGANIC COMPOUNDS

Air Stripper (Influent)	7/95	10/95	1/96	4/96	7/96	10/96	1/97	4/97	8/98	2/99	5/99	9/99	10/99	2/00	5/00
Bromodichloromethane	ND	ND	ND	ND	ND	ND	ND	ND	ND	ND	ND	ND	ND	ND	ND
Dibromochloromethane	ND	ND	ND	ND	ND	ND	ND	ND	ND	ND	ND	ND	ND	ND	ND
Carbon Tetrachloride	24	18	24	15	15	12	17	13	25 E	36 E	20.3	24.8	27.2	43	21.3
Chloroform	3	1.7	2	2	ND	3	2	1	2	3	1.8	2.2	2.3 UJ	3	ND
Tetrachloroethene	ND	ND	ND	ND	ND	ND	ND	ND	ND	0.3 J	ND	ND	ND	ND	ND
Trichloroethene	21	22	22	18	21	23	22	16	24	40 E	27.2 E	30 D	27.8	28.2	17.1
Trichlorofluoromethane	ND	ND	ND	ND	ND	ND	ND	ND	0.4 J	0.5 J	ND	ND	ND	ND	ND

Air Stripper (Effluent)															
Benzene	ND	ND	ND	ND	ND	ND	ND	ND	ND	ND	ND	ND	ND	ND	ND
Bromodichloromethane	ND	ND	ND	ND	ND	ND	0.8	ND	ND	ND	ND	ND	ND	ND	ND
Dibromochloromethane	ND	ND	ND	ND	ND	ND	ND	ND	ND	ND	ND	ND	ND	ND	ND
n-Butylbenzene	ND	ND	ND	ND	ND	ND	1	ND	NR	NR	NR	NR	NR	NR	NR
Dibromochloromethane	ND	ND	ND	ND	ND	ND	ND	ND	ND	ND	ND	ND	ND	ND	ND
Carbon Tetrachloride	ND	ND	0.9	ND	ND	ND	ND	ND	0.2 J	0.6 J	ND	ND	ND	ND	ND
Chloroform	ND	ND	0.8	ND	ND	ND	ND	ND	ND	0.3 J	ND	ND	ND	ND	ND
p-Cymene	ND	ND	ND	ND	ND	ND	0.8	ND	NR	NR	NR	NR	NR	NR	NR
Ethylbenzene	ND	ND	ND	ND	ND	ND	0.8	ND	ND	ND	ND	ND	ND	ND	ND
Napthalene	ND	ND	ND	ND	ND	ND	0.6	ND	NR	NR	NR	NR	NR	NR	NR
Toluene	ND	ND	ND	ND	ND	ND	ND	ND	ND	ND	ND	ND	ND	ND	ND
Tetrachloroethylene	ND	ND	ND	ND	ND	ND	ND	ND	ND	ND	ND	ND	ND	ND	ND
Trichloroethene	0.7	0.8	2	ND	ND	ND	ND	0.6	0.6 J	1	0.73 J	ND	ND	ND	ND
1,2,4-Trimethylbenzene	ND	ND	ND	ND	ND	ND	6	ND	NR	NR	NR	NR	NR	NR	NR
1,3,5-Trimethylbenzene	ND	ND	ND	ND	ND	ND	2	ND	NR	NR	NR	NR	NR	NR	NR
m-Xylene	ND	ND	ND	ND	ND	ND	2	ND	NR	NR	NR	NR	NR	NR	ND
o-Xylene	ND	ND	ND	ND	ND	ND	2	ND	NR	NR	NR	NR	NR	NR	ND
p-Xylene	ND	ND	ND	ND	ND	ND	1	ND	NR	NR	NR	NR	NR	NR	ND

Notes:

1. All concentrations are in micrograms per liter (ug/l = parts per billion (ppb)).
2. ND = Not detected.
3. NR = Not reported.

IT Corporation
A Member of The IT Group

TABLE 2
MALTA ROCKET FUEL AREA SITE
WRIGHT-MALTA AIR STRIPPER ANALYTICAL RESULTS
VOLATILE ORGANIC COMPOUNDS

Air Stripper (Influent)	9/00	10/00	2/01	3/01	5/01	8/01	10/01
Bromodichloromethane	ND	ND	ND	ND	ND	ND	ND
Dibromochloromethane	ND	ND	ND	ND	ND	ND	ND
Carbon Tetrachloride	15.8	22.7	25 E	20.4	15.8	19.3	29.4 E
Chloroform	1.6	2.7	2.7	2.8	1.7	2	2.8
Tetrachloroethene	ND	ND	ND	ND	ND	ND	ND
Trichloroethene	12.3	18	20	20.1	13.1	14.8	18
Trichlorofluoromethane	ND	ND	ND	ND	ND	ND	ND

Air Stripper (Effluent)							
Benzene	ND	ND	ND	ND	ND	ND	ND
Bromodichloromethane	ND	ND	ND	ND	ND	ND	ND
Dibromochloromethane	ND	ND	ND	ND	ND	ND	ND
n-Butylbenzene	NR	NR	NR	NR	NR	NR	NR
Dibromochloromethane	ND	ND	ND	ND	ND	ND	ND
Carbon Tetrachloride	ND	ND	ND	ND	ND	ND	ND
Chloroform	ND	ND	ND	ND	ND	ND	ND
p-Cymene	NR	NR	NR	NR	NR	NR	NR
Ethylbenzene	ND	ND	ND	ND	ND	ND	ND
Napthalene	NR	NR	NR	NR	NR	NR	NR
Toluene	ND	ND	ND	ND	ND	ND	ND
Tetrachloroethylene	ND	ND	ND	ND	ND	ND	ND
Trichloroethene	ND	ND	ND	ND	ND	ND	ND
1,2,4-Trimethylbenzene	NR	NR	NR	NR	NR	NR	NR
1,3,5-Trimethylbenzene	NR	NR	NR	NR	NR	NR	NR
m-Xylene	ND	ND	ND	ND	ND	ND	ND
o-Xylene	ND	ND	ND	ND	ND	ND	ND
p-Xylene	ND	ND	ND	ND	ND	ND	ND

Notes:
1. All concentrations are in micrograms per liter (ug/l = parts per billion (ppb)).
2. ND = Not detected.
3. NR = Not reported.

IT Corporation
A Member of The IT Group

TABLE 3
SUMMARY OF DRINKING WATER SAMPLING PROGRAM, PRESERVATIVES, HOLDING TIMES AND CONTAINERS
MALTA ROCKET FUEL AREA SITE

Sample	Sampling Frequency	Sample Matrix	Analytical Parameters	Analytical Method Reference[1]	Sample Preservation	Holding Times[2]	Containers
Influent	1 per quarter	Water	CLP OLC VOCs	USEPA CLP OLCO2	Hcl, Cool, <4°C	14 days	3 - 40 ml glass vials with teflon septa and plastic screw caps
Effluent	1 per quarter	Water	CLP OLC VOCs	USEPA CLP OLCO2	Hcl, Cool, <4°C	14 days	3 - 40 ml glass vials with teflon septa and plastic screw caps

Notes:

1. *USEPA CLP OLCO2 analysis modified to include hexachlorobutadiene, 1,2,3 trichlorobenzene and trichlorofluoromethane to match the EWMS ground water analyses.*
2. *Holding times begin at the time of sample collection.*

IT Corporation
A Member of The IT Group

TABLE 4
CONTINGENCY MONITORING
HISTORICAL LIST OF PARAMETERS ANALYZED BY WRIGHT-MALTA CORPORATION

PARAMETER PERFORMED	METHOD
Total Coliform (MF)	SM 9222
Escherichia coli	20 CFR 141.21
Asbestos, (fibers>0.5um)	EPA-600-484 04
Asbestos, (fibers>10um)	EPA-600-484 04
Fluoride	EPA-300.0
Sulfate	EPA-300.0
Nitrate-N	EPA-353.1
Cyanide, Total	EPA-335.2
Arsenic	EPA-206.2
Barium	EPA-200.7
Cadmium	EPA-200.7
Chromium	EPA-200.7
Mercury	EPA-245.1
Selenium	EPA-270.2
Antimony	EPA-200.7
Beryllium	EPA-200.7
Nickel	EPA-200.7
Thallium	EPA-279.2

TABLE 5
EQUIPMENT LOG
AIR STRIPPER MAINTENANCE
MALTA ROCKET FUEL AREA SITE

Date	Operator	Operational Status of System	Work Performed

TABLE 6
MAINTENANCE CHECKLIST
OPERATION AND MAINTENANCE PLAN
TEST STATION WATER SUPPLY AND TREATMENT SYSTEM
MALTA ROCKET FUEL AREA SITE

Equipment Name	Item	Action	Frequency	Comments
Well Pump 1D	Pump bowls	Check for signs of iron fouling & impeller wear	Annually	More frequently as problems occur
Well Pump 2D	Pump bowls	Check for signs of iron fouling & impeller wear	Annually	More frequently as problems occur
Control Valves	Miscellaneous	Inspect for leaks	Monthly	Exercise valves annually
Air Stripper Sight Tube		Inspect for siltation and biofouling	Monthly	Adjust frequency depending on operating experience
Air Stripper Spray Nozzle		Inspect for fouling	Annually	No required routine maintenance
Air Stripper Blower	Intake	Inspect and clean	Monthly	Adjust frequency depending on operating experience
Air Stripper Blower	Motor & bearings	Check and lubricate	Annually	More frequently as problems occur
Air Stripper Unit	Packing	Clean or replace	Every 5 years	Adjust frequency depending on operating experience

TABLE 6 (Continued)
MAINTENANCE CHECKLIST
OPERATION AND MAINTENANCE PLAN
TEST STATION WATER SUPPLY AND TREATMENT SYSTEM
MALTA ROCKET FUEL AREA SITE

Equipment Name	Item	Action	Frequency	Comments
Mist Eliminator	Mesh screen	Clean or replace	Annually	Adjust frequency depending on operating experience
Settling Tank		Inspect for siltation	Monthly	Adjust frequency depending on operating experience
Settling Tank High Level Float Switch		Check operation	Monthly	Replace float switch every 5 years
100K Gallon Reservoir		Inspect for siltation, debris, etc.	Annually	Adjust frequency depending on operating experience
Level Sensor	Probe	Manually check start-up/shutdown. Check probe float for free range of motion. Remove and inspect for buildup of minerals if resistance is detected.	Monthly	Adjust frequency depending on operating experience
Misc. Guys, Hardware etc.		Inspect	Annually	Adjust frequency depending on operating experience
System Interlocks	Settling Tank High Level Blower Low Pressure Blower Low Amps Building Low Temperature	Check for proper operation. System should alarm after pre-set delay period.	Monthly	Adjust frequency depending on operating experience

IT Corporation
A Member of The IT Group

Table 7
Spare Parts List
Water Treatment System
Malta Rocket Fuel Area Site

Replacement Part or Component	Manufacturer's/Vendor Information	Quantity Inventoried at Site	Comments
Settling Tank Sump Pump	**McMaster Carr** All-Purpose Sump Pump with Bronze Housing Part Number 9989K48	0	Replacement pump readily available
Settling Tank High Level Float Switch	**Dwyer Instruments** Model L8 Liquid Level Switch	0	Recommend replacement every 5 years
Air Stripper Blower Motor	**W.W. Grainger** One HP 230V/Single Phase TEFC Electric Motor Part Number: 6K197	0	Replacement motor readily available
Air Stripper Blower Motor Fuses	**Westburne Electrical Supply** 230 Volt 15 amp Slow Blow Ceramic	3	Fuses last replaced March 2001
Air Stripper Blower Flexible Discharge Duct	**McMaster Carr** Flex-Vac Thermoplastic Elastomer (TPE) Hose Part Number 5475K22	0	Minimum order = 5 lineal feet
AC Power and Phone Surge Protector	**McMaster Carr** Plug-in Surge Protector Part Number 6966K4	0	Replacement readily available
230 Volt Recovery Pump	**National Supply Corporation** Goulds Pumps RW-1D: Model 10GS104012 - Three wire/230V/1HP RW-2D: Model 13EM10422 - Two wire/230V/1HP	0	Replacement pumps and motors are readily available.
Totalizer	**Hayes Pump** Master Meter 1-1/2" Multi-Jet Meter	0	Replacements readily available
Totalizer Register	**Hayes Pump** Master Meter Multi-Jet Output Register Output Option: 10 gallons/switch closure	0	Replacements readily available
Air Velocity Transmitter Probe	**Dwyer Instruments** Series 640 Air Velocity Transmitter Model 640-0	0	Replacement readily available
PVC Schedule 80 Ball and Check Valves	**F.W. Webb** Hayward Corporation PVC Sch 80 2" True Union Ball Valve PVC Sch 80 2" True Union Ball Check	0	Replacements readily available Valves replaced November 2001
HDPE Y Strainer	**F.W. Webb** Banjo Products HDPE 2" Y Strainer	0	Replacements readily available

Note: Necessity for on-site inventory of spare parts should be re-evaluated should an increase in system demand require significantly higher throughput. Consult section 7.1 of the *Operation and Maintenance Manual, Remedial Work Element I, Drinking Water*

TABLE 8
WEEKLY REMOTE SYSTEM INSPECTION DOCUMENTATION FORM
MALTA ROCKET FUEL AREA SITE

Date:_____

List active acknowledged alarms:	
List active unacknowledged alarms:	

Record RTU input conditions:

From most recent period of normal system operation:

Input Label	Current Status	Design Status	Current Value	Design Value
Date: **Time:**				
Panel Temp		OK		40 – 110 F
Blower Low Amps		OK		OK
Sett Tank High		OK		OK
Well 2 Pulses		HI		Value varies
Well 1 Pulses		HI		Value varies
Building Temp		OK		OK
Blow Hi Press		OK		OK
Blow Lo Press		OK		OK
Blower Air Rate		OK		Minimum 662 fpm
Blower Pressure		OK		Minimum 1.0" H_2O

Current conditions (if system is in alarm)

Input Label	Current Status	Design Status	Current Value	Design Value
Date: **Time:**				
Panel Temp		OK		40 – 110 F
Blower Low Amps		OK		OK
Sett Tank High		OK		OK
Well 2 Pulses		HI		Value varies
Well 1 Pulses		HI		Value varies
Building Temp		OK		OK
Blow Hi Press		OK		OK
Blow Lo Press		OK		OK
Blower Air Rate		OK		Minimum 662 fpm
Blower Pressure		OK		Minimum 1.0" H_2O

FIGURES

IMAGE	X-REF	OFFICE	DRAWN BY	CHECKED BY	APPROVED BY	DRAWING NUMBER
---	---	ALBANY	S. SHKOLNIK 09-13-01			810066A1

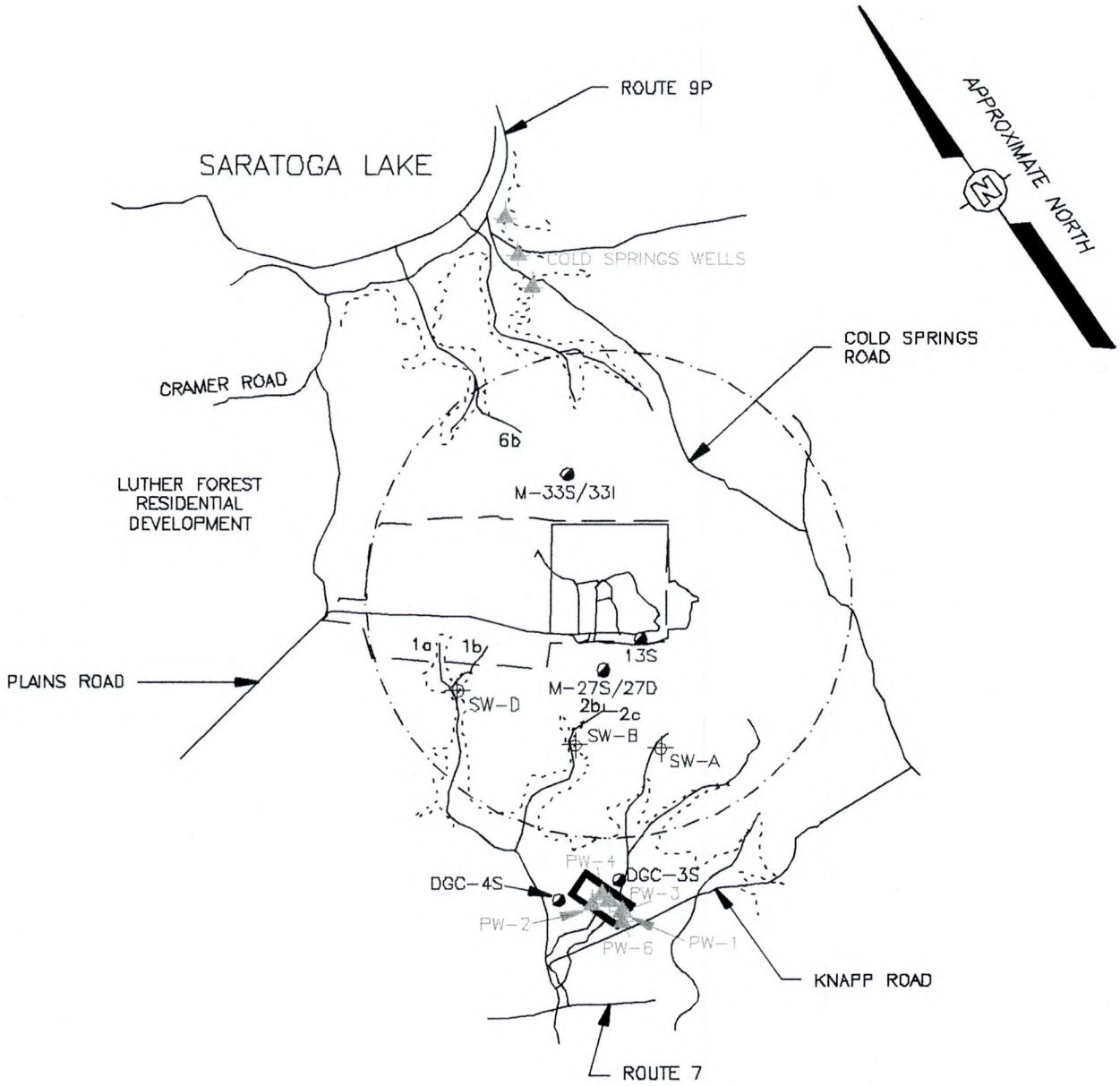

LEGEND

- DGC-4S WELL PAIR LOCATION & ID#
- PW-2 PUMPING WELL LOCATION & ID#
- LUTHER FOREST WELL FIELD
- SW-D SURFACE WATER SAMPLE LOCATION & ID#
- 6b RAVINE LOCATION & ID#
- — — APPROXIMATE MRFA SITE BOUNDARY
- —·— APPROXIMATE ONE MILE EASEMENT BOUNDARY
- ------ 250' GROUND SURFACE CONTOUR LINE

APPROXIMATE
SCALE
0 3600 7200 FEET

REFERENCE:
REFERENCE DRAWING:
ERM – SEPTEMBER, 1998.

IT CORPORATION

MALTA ROCKET FUEL AREA SITE
MALTA, NEW YORK

FIGURE 1

SITE LOCATION MAP

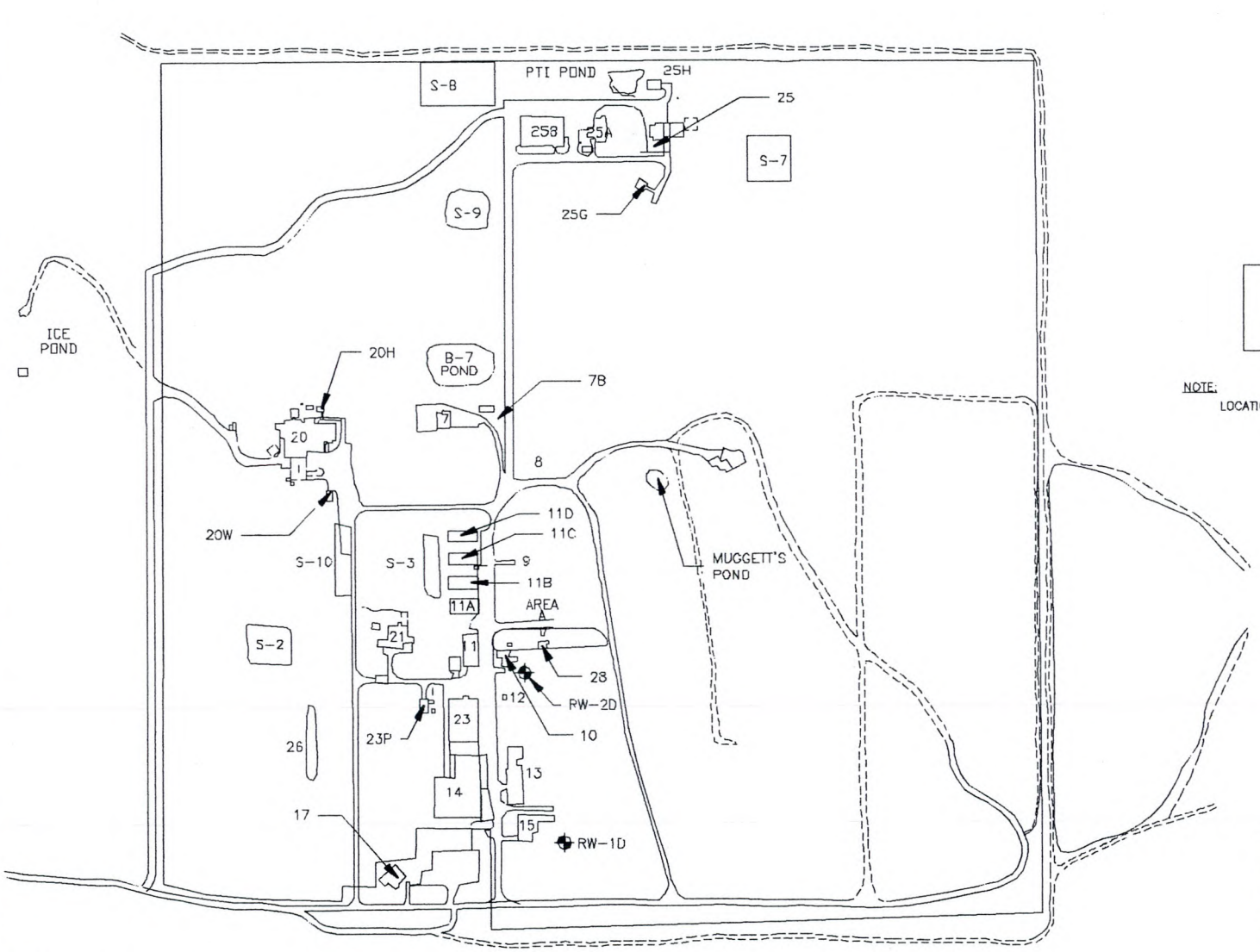

LEGEND:

RECOVERY WELL

NOTE:
LOCATIONS OF RW-1D AND RW-2D ARE APPROXIMATE.

APPROXIMATE SCALE
0 300 600 FEET

REFERENCE:
BASE MAP SOURCE. ERM-NORTHEAST
ENVIRONMENTAL RESOURCES MANAGEMENT

MALTRA ROCKET FUEL AREA SITE
MALTA, NEW YORK

FIGURE 2
TEST STATION AREA DRAWING

OFFICE	DRAWN BY	CHECKED BY	APPROVED BY	DRAWING NUMBER
ALBANY, NY	S. SHKOLNIK 09-04-01			810066B3

L:\project\MRFA\B10066B3.dwg
Plot Date/Time: 11/27/01 04:59pm
Format Revised: 12/15/99
Image: .
Xref: .

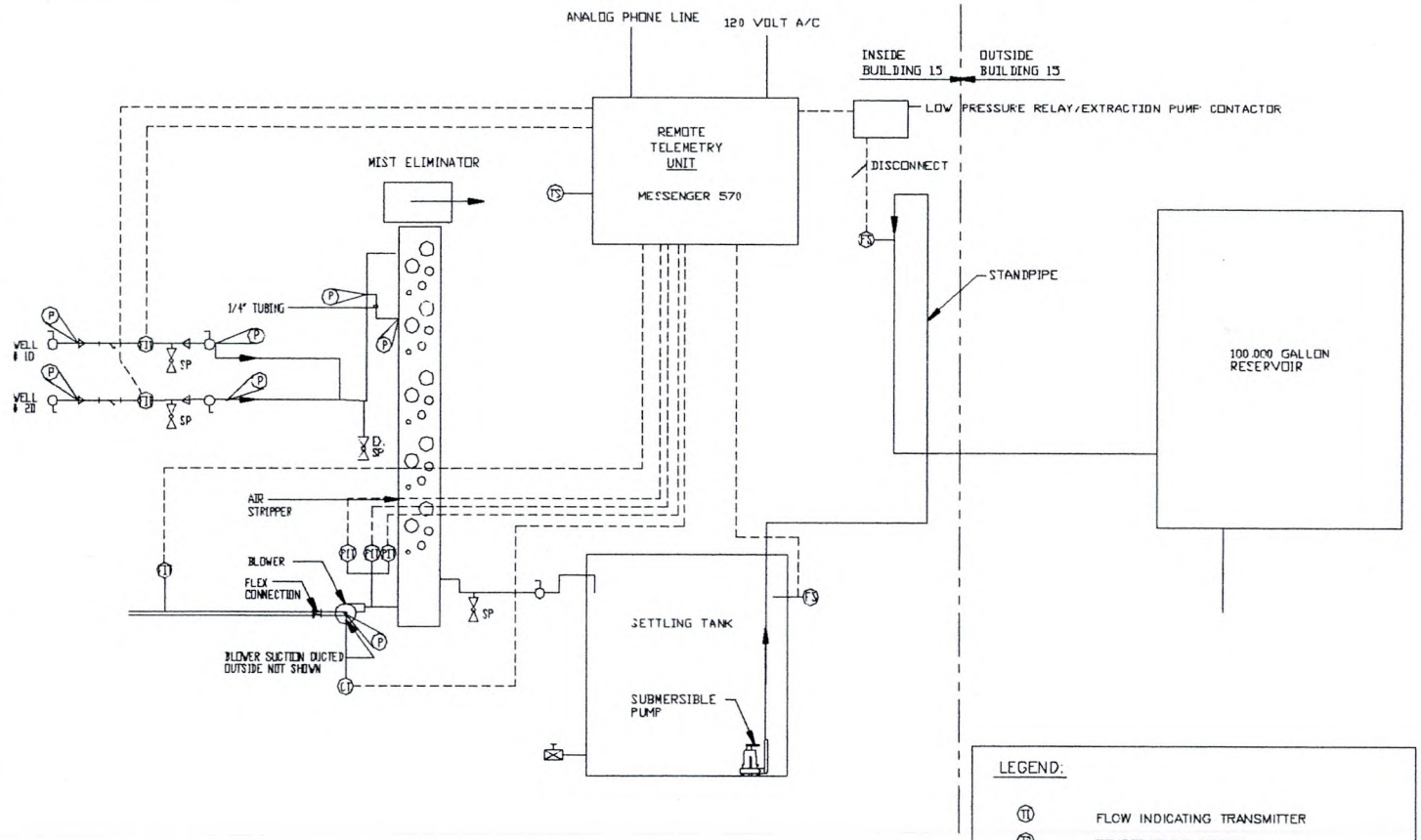

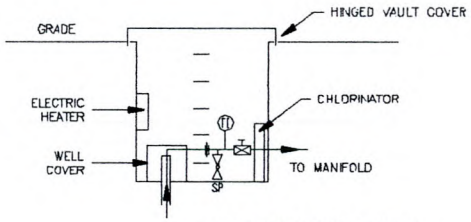

RECOVERY VAULT LAYOUT
(TYPICAL OF RW-1D & RW-2D)

LEGEND:

- FLOW INDICATING TRANSMITTER
- TEMPERATURE SWITCH
- CURRENT TRANSFORMER
- FLOW INDICATING TRANSMITTER
- PRESSURE INDICATING TRANSMITTER
- FLOAT SWITCH
- GATE VALVE
- POINT OF CONNECTION
- 2" X 1 1/2" REDUCER FITTING (TYP. OF 4)
- Y-STRAINER
- BALL-VALVE
- SP SAMPLING PORT 1/4" BALL VALVE W/ BARBED FITTING

REFERENCE:

BASE MAP SOURCE: ERM-NORTHEAST
ENVIRONMENTAL RESOURCES MANAGEMENT

DRAWING NOT TO SCALE

IT CORPORATION

MALTRA ROCKET FUEL AREA SITE
MALTA, NEW YORK

FIGURE 3 (SHEET 1)
PROCESS & INSTRUMENTATION DIAGRAM
WATER SUPPLY AND TREATMENT SYSTEM

OFFICE	DRAWN BY	CHECKED BY	APPROVED BY	DRAWING NUMBER
ALBANY, NY	D. CINELLI 08-28-01			810066B1

L:\project\MRFA\B10066B1.dwg
Plot Date/Time: 01/17/02 11:15am
Format Revised: 12/15/99
Image: .
Xref: .

NOTES:

1. ALL INTAKE AIR PIPING IS SCHEDULE 40 PVC WITH SOLVENT WELDED JOINTS.

2. SIX INCH DIAMETER INTAKE AIR PIPING EXTENDS THROUGH OUTSIDE WALL AND TERMINATES WITH AN ELBOW FACING DOWN. THE END OF THE PIPE IS FITTED WITH 1/4" ZINC PLATED HARDWARE CLOTH CLAMPED INTO PLACE.

3. INTAKE PIPING IS CONNECTED TO THE EXISTING AIR STRIPPER BLOWER WITH A FERNCO STYLE COUPLING TO PROVIDE A FLEXIBLE, AIR TIGHT CONNECTION.

4. 1/4" TUBING IS INSTALLED APPROXIMATELY 12" BELOW THE BUILDING ROOF FROM THE 2" PVC PIPE (RUNNING UP TO THE TOP OF THE AIR STRIPPER).

5. PRESSURE INDICATING TRANSMITTER IS A DWYER SERIES 3000 RANGE = 0-30 INCHES WATER COLUMN, 316 SS WETTED PARTS, NEMA 7 EXPLOSION PROOF HOUSING, (4-20MA) OUTPUT.

6. FLOW METERS ARE SIZED FOR 1.5-100 GPM DESIGN FLOW RANGE. THE FLOW METERS ARE A PULSE TYPE METER WITH REMOTE DIGITAL FLOW RATE AND TOTALIZER. UNITSARE MASTERMETER 1 1/2" MULTI-JET METER RATE/TOTALIZER.

7. FLOAT SWITCH CONSISTS OF A BULB TYPE POLYPROPYLENE FLOAT WITH A INTEGRAL MICRO SWITCH RATED FOR 24 VAC, DESIGNED FOR USE IN WATER (SPECIFIC GRAVITY OF 1.0). THE FLOAT INCLUDES A PVC SHEATHED CABLE. MODEL INSTALLED IS A DWYER MODEL LB FLOTECH SWITCH.

8. FLOW INDICATING TRANSMITTER FOR AIR STRIPPER BLOWER IS A DWYER SERIES 640 AIR VELOCITY TRANSMITTER, MEASURING 0-12,000 FEET PER MINUTE WITH 4-20 mA OUTPUT. UNIT IS TO BE INSTALLED IN 6" PVC SCHEDULE 40 INTAKE DUCT.

9. CURRENT TRANSFORMER FOR AIR STRIPPER BLOWER MOTOR TO BE AN NK TECHNOLOGES CURRENT OPERATED SWITCH. MODEL ASINCUFT. SWITCH TO BE ENCLOSED IN A NEMA 4X 10"x8"x6" ENCLOSURE (HOFFMAN CATALOG #A-10B6CHQRFG)

10. REMOTE TELEMETRY EXPANSION MODULE TO BE PROVIDED BY GEMS SENSORS INC, PART #FGD-0135. CONNECTS TO EXISTING UNIT VIA R-232 CABLE. TO BE INSTALLED IN A NEME 4X 12"x10"x6" ENCLOSURE (HOFFMAN CATALOG #A-10B6CHQRFG)

REFERENCE:

BASE MAP SOURCE. ERM-NORTHEAST
ENVIRONMENTAL RESOURCES MANAGEMENT

IT CORPORATION

MALTRA ROCKET FUEL AREA SITE
MALTA, NEW YORK

FIGURE 3 (SHEET 2)
PROCESS & INSTRUMENTATION DIAGRAM
WATER SUPPLY AND TREATMENT SYSTEM

OFFICE	DRAWN BY	CHECKED BY	APPROVED BY	DRAWING NUMBER
ALBANY, NY	D. CINELLI 08-28-01			810066B2

L:\project\MRFA\810066B2.dwg
Plot Date/Time: 11/27/01 03:08pm
Format Revised: 12/13/99
Image: .
Xref: .

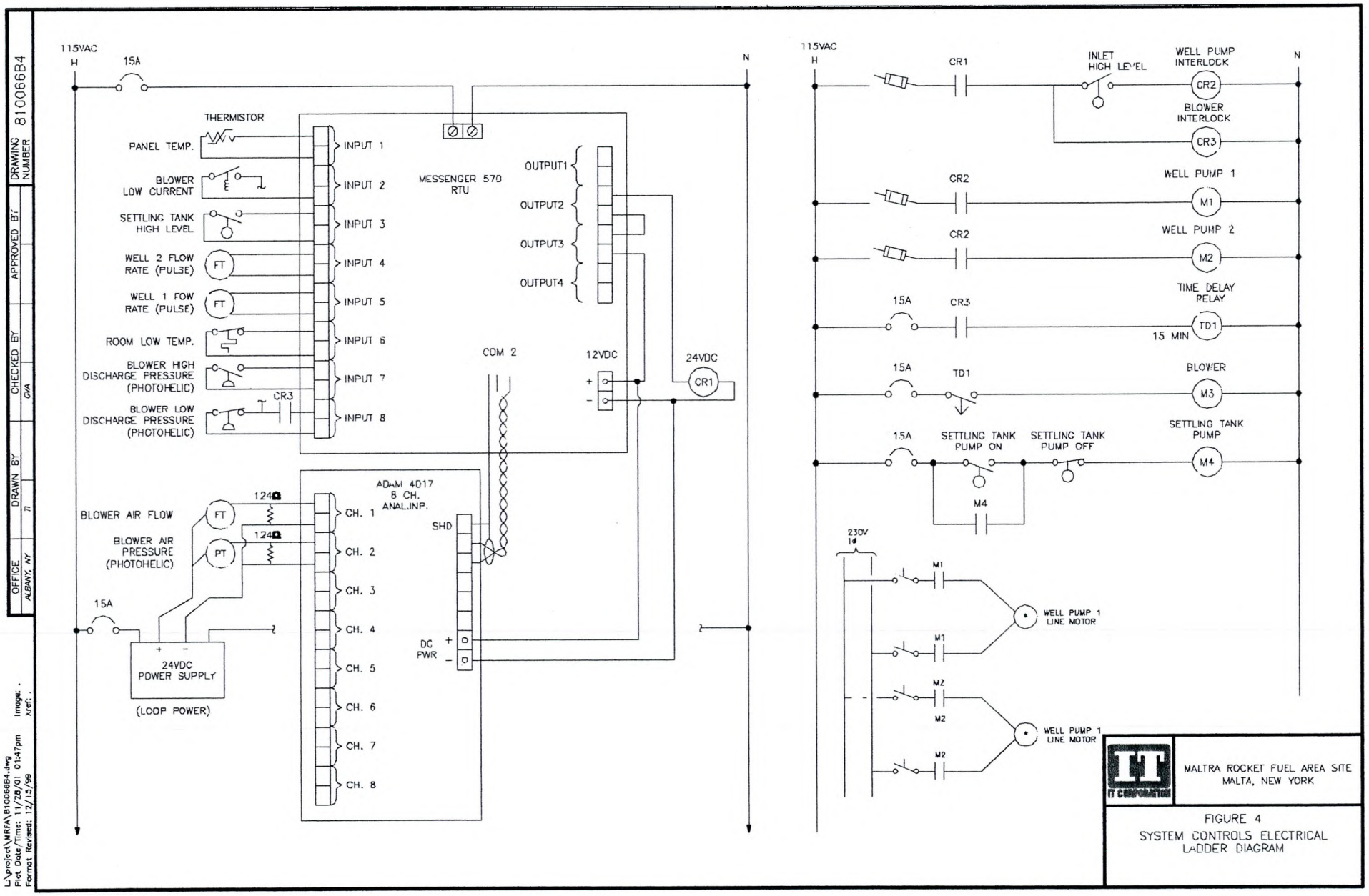
115VAC
H
15A
N
THERMISTOR
PANEL TEMP.
BLOWER LOW CURRENT
SETTLING TANK HIGH LEVEL
WELL 2 FLOW RATE (PULSE)
WELL 1 FOW RATE (PULSE)
ROOM LOW TEMP.
BLOWER HIGH DISCHARGE PRESSURE (PHOTOHELIC)
BLOWER LOW DISCHARGE PRESSURE (PHOTOHELIC)
CR3
INPUT 1
INPUT 2
INPUT 3
INPUT 4
INPUT 5
INPUT 6
INPUT 7
INPUT 8
MESSENGER 570 RTU
OUTPUT1
OUTPUT2
OUTPUT3
OUTPUT4
COM 2
12VDC
24VDC
CR1
BLOWER AIR FLOW
BLOWER AIR PRESSURE (PHOTOHELIC)
124Ω
ADAM 4017 8 CH. ANAL.INP.
CH. 1
CH. 2
CH. 3
CH. 4
CH. 5
CH. 6
CH. 7
CH. 8
SHD
DC PWR
24VDC POWER SUPPLY
(LOOP POWER)
CR1
INLET HIGH LEVEL
WELL PUMP INTERLOCK
CR2
BLOWER INTERLOCK
CR3
WELL PUMP 1
M1
WELL PUMP 2
M2
TIME DELAY RELAY
TD1
15 MIN
BLOWER
M3
SETTLING TANK PUMP ON
SETTLING TANK PUMP OFF
SETTLING TANK PUMP
M4
230V 1Ø
WELL PUMP 1 LINE MOTOR
WELL PUMP 1 LINE MOTOR
IT CORPORATION
MALTRA ROCKET FUEL AREA SITE
MALTA, NEW YORK
FIGURE 4
SYSTEM CONTROLS ELECTRICAL LADDER DIAGRAM
DRAWING NUMBER 810066B4
APPROVED BY
CHECKED BY GKA
DRAWN BY TI
OFFICE ALBANY, NY
L:\project\MRFA\B1006684.dwg
Plot Date/Time: 11/28/01 01:47pm
Format Revised: 12/13/99
Image: .
Xref: .

APPENDIX A
AIR STRIPPER SYSTEM OCTOBER 2001 EQUIPMENT SPECIFICATIONS

Gems Remote Monitoring

FGD-0135 Input Expansion Module

Features:

- 8 differential inputs
- Voltage or current inputs
- 10 samples/second (total)
- 16-bit conversions

FGD-0135 (CB-7017) Specifications:

Channels: 6 differential + 2 single-ended or 8 differential (jumper select)
Input type: mV, V, mA
Input range: ±150mV, ±500mV, ±1V, ±5V, ± 10V and ±20mA
Resolution: 16-bits
Sample rate: 10 sample/sec(total)
Bandwidth: 13.1 Hz
Accuracy: ±0.1% or better
Zero drift: ±0.03uV/°C
Span drift: ±25ppm/°C
CMR @ 50/60 Hz: 92 dB min
Over voltage protection: ±35V

General Specifications:

Isolation voltage: 3000Vdc min
Serial data rate: 1200, 2400, 4800,9600, 19200, 38400, 57600, 115200
Power required: +10 to +30V
Power consumption: 2 W
Operating temp: 14°F to 158°F
Storage temperature: -13°F to 185°F
Humidity: 5 to 95%, non-condensing

NK Technologies

AS1 Series

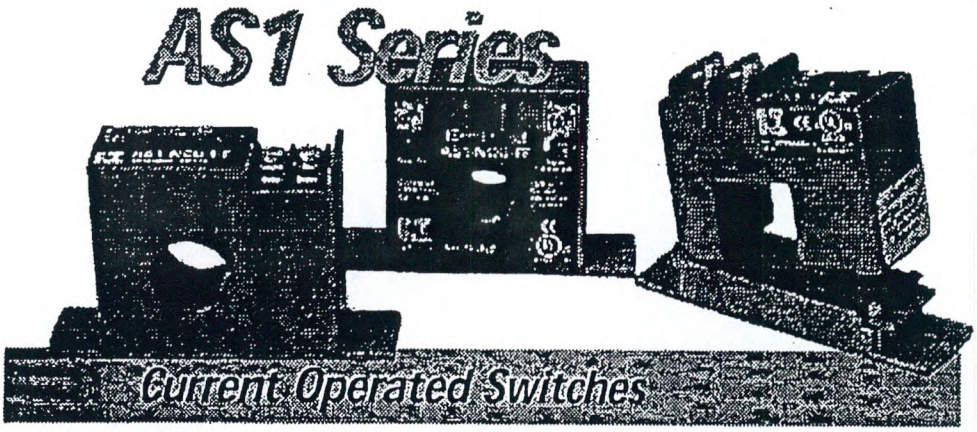

Current Operated Switches

'AS1' Current Switches from NK Technologies combine a current transformer, signal conditioner and limit alarm into a single package. The AS1 series has an extended current input range, universal solid-state outputs and a wide frequency response. Available in a split core case or two styles of solid core cases.

Applications

Electronic Proof Of Flow
- —No need f or pipe or duct penetrations.
- — More reliable than electromechanical pressure or flow switches.

Conveyors
- — Detects jams and overloads
- — Interlocks multiple conveyor sections

Lighting Circuits
Easier to install and more accurate than photocells.

Electric Heaters
Faster response than temperature sensors.

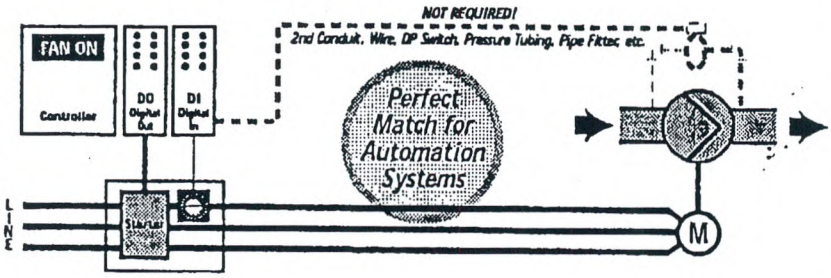

Features

- **Universal Output**
  - —Solid state switch N.C. or N.O. works on AC or DC to 240VAC.
  - —Compatible with any automation system.
  - —Reduces inventory, installation and engineering costs.
- **Self-powered**
  Cuts installation and operating costs.
- **Easily Adjustable Setpoint**
  Speeds startup
- **Solid or Split Core Case**
  Choose the right version for each installation.
- **Built-in Mounting Bracket**
  Provides the solid installation inspectors want.
- **UL, CUL and CE Approval**
  Accepted worldwide.

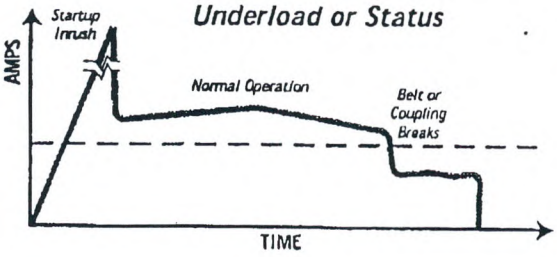

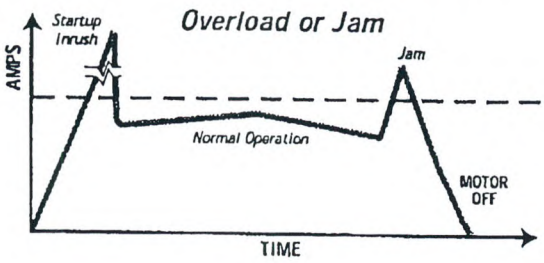

Know your power...

because with knowledge comes control.

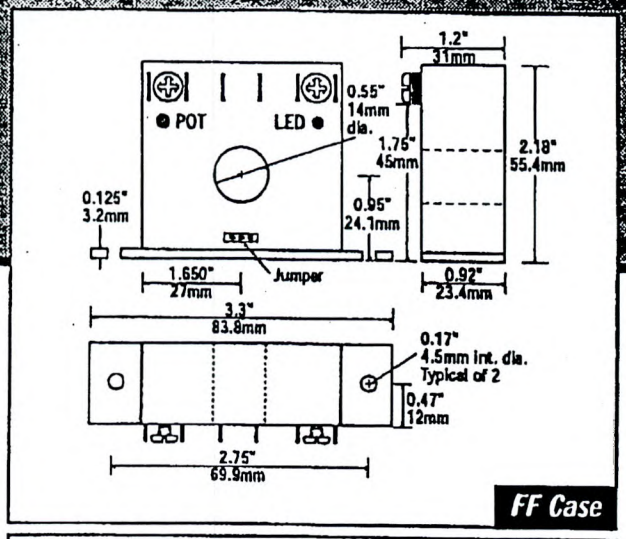

FF Case

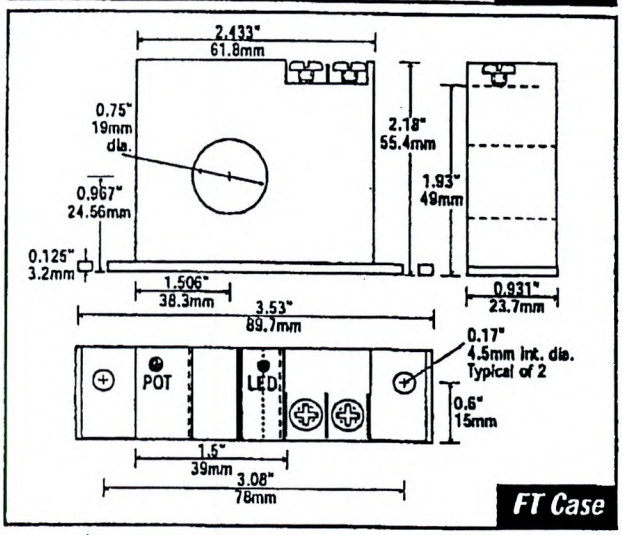

FT Case

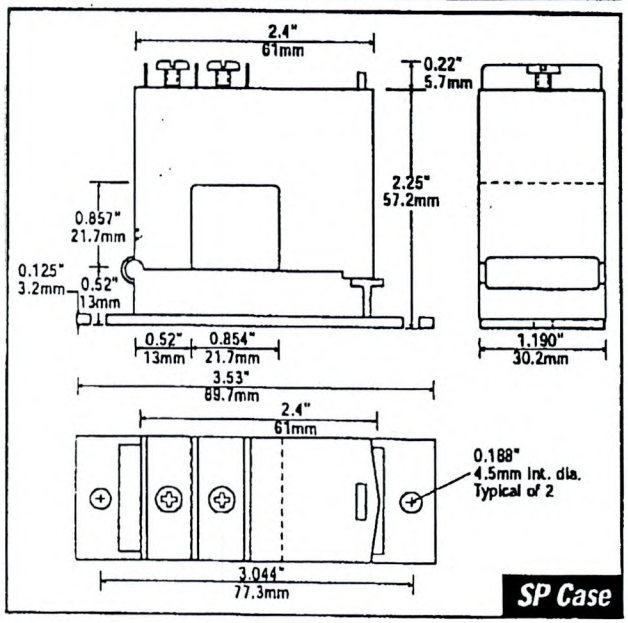

SP Case

Specifications

Power Supply	None — Self-powered
Output	Magnetically Isolated Solid-State Switch
Output Rating	* N.O. Version: 0.2A @ 240VAC or VDC * N.C. Version: 0.2A @ 130VAC or VDC * Not polarity sensitive
Off State Leakage	None
Response Time	0.120 Second
Setpoint Range	* Fixed Core: 1–150A * Split Core: 1.5–150A
Hysteresis	5% of Setpoint
Overload	MODEL / CONTINUOUS / 6 SEC / 1 SEC * –GO / 250A / 500A / 1,000A (NOU) * –GO / 150A / 400A / 1,000A (NCU) * All Other / 150A / 400A / 1,000A
Isolation Voltage	UL Listed to 1,270VAC, tested to 5,000VAC
Frequency Range	6–100Hz
Sensing Aperture	* –FF Case: 0.55" (14mm) dia. * –FT Case: 0.75" (19mm) dia. * –SP Case: 0.85" (21.5mm) sq.
Case	UL 94V-0 Flammability rated
Environmental	–58 to 149°F (–50 to 65°C), 0–95% RH, non-condensing
Listings	UL 508 Industrial Control Equipment (USA & Canada), CE (Pending)

Connections

Typical of Models with LED

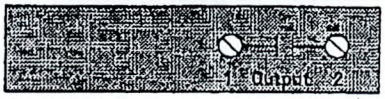

Typical of Go/No-Go Models

Notes:
- Terminals are #6 screws.
- Normally open contacts shown (NOU).
- Normally closed contacts similar (NCU).

Ordering Information

Example: AS1-NOU-SP

Adjustable AC current switch, split core, with indicating LED.

AS1 [ ] – [ ] – [ ]

Output Rating	Case Style	Options
NOU Normally Open	FF Fixed Core, Front Term.	GO Go/No-Go Version (Fixed Setpoint)
NCU Normally Closed	FT Fixed Core, Top Term.	NL No LED
	SP Split Core	— With LED (Blank)

Current Operated Switches

Series 640

Air Velocity Transmitter

Four field selectable ranges from 0-200 to 0-12,000 FPM Linear. 4-20 mA output signal ±2% accuracy at an affordable cost

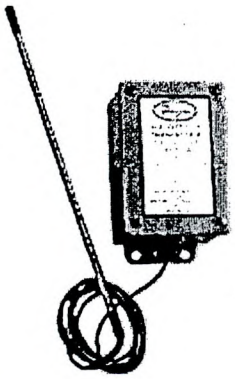

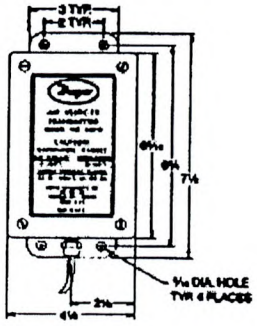

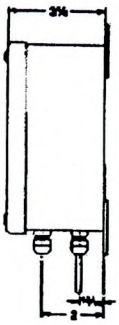

Service Manual

Rugged steel NEMA 13 housing with 12" stainless steel probe on 6' connecting cable. Liquid tight cable entrances. — Patent No. 4,860,583

The Dwyer Series 540 Air Velocity Transmitter is ideal for a wide range of HVAC measurement and control applications, particularly in complete building control and energy management systems. Designed for use in reasonably clean and dry air streams, applications include multi-point air velocity measurements, supply and exhaust fan tracking, industrial hygiene and clean-room systems, air pollution studies and manufacturing or process control systems.

The Series 640 brings ±2% accuracy (including linearity, hysteresis and repeatability) to these types of demanding applications at a surprisingly low cost. With four field selectable ranges of 0-200, 0-1000, 0-3000 and 0-12,000 FPM, this single transmitter can be supplied off-the-shelf for a variety of different air velocity measurement applications.

The Series 640 transmitter is easily installed with the mounting hardware supplied, including a split flange for securing the sensing probe in the duct. Requiring only 18-24 volts AC or 22-29 volts DC for power and having a two-wire, 4-20 mA output, electrical connections are made quickly and easily by means of a four-wire cable to a plug-in terminal block through a liquid tight cable gland. The NEMA 13 housing is suitable for all indoor industrial, institutional or commercial installations, An optional probe extension is available for larger duct sizes.

The central components o the Series 640 transmitter are the velocity and temperature sensors located int he tip of the probe. The velocity sensor is a constant temperature thermistor which measures the air velocity, referenced to standard conditions, by sensing the cooling effect of the moving air passing over the heated sensor. The power required to maintain the velocity sensor temperature, as provided by the control circuitry in the electronics package, is a function of the air velocity. The velocity sensor is rugged enough to tolerate particulate contamination and still provide fast response to changes

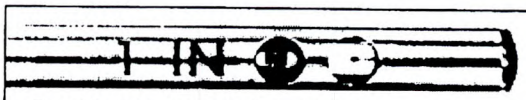

Durable thermal velocity and temperature sensors are mounted within 5/16" dia. stainless steel probe with etched 12" insertion depth scale.

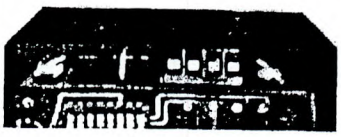

Simple field ranging by means of circuit board mounting DIP switch. Easy electrical connections

in air velocity. A temperature sensor in the probe tip compensates for a wide range of air stream temperature variation. Each transmitter is individually calibrated at our factory in a computer controlled wind tunnel. During this calibration procedure, the inherent non-linearity of the thermistor velocity sensor is automatically corrected by appropriate programming of an EPROM in a linearizer circuit of the electronics package.

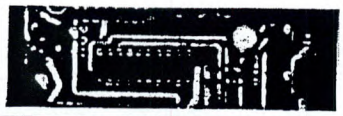

made by means of four-wire cable with plug-in terminal connector.

PHYSICAL DATA

GENERAL

Media: Air

Ranges: ~~0-200, 0-1000~~, 0-3000, ~~0-12,000~~ FPM (field selectable: referenced to standard conditions)

ELECTRICAL

Power Supply: 18-24 VAC, 22-28 VDC

Output Signal: 4-20 mA DC

Loop Resistance: 0-300 OHMS

Current Consumption: 250 mA Maximum

Warm-up Time: 3 to 5 minutes

PERFORMANCE

Zero Output: 4 mA

Full Span Output: 20 mA

ACCURACY: (% of F.S.)

0-200 fpm range ±5% @ 32-180°F
±9% @ 0-32°F or 180-200°F

0-1000, 0-3000 or 0-12,000 fpm ranges ±2% @ 32-180°F
±6% @ 0-32 or 180-200°F

ENVIRONMENTAL

Temperature Ranges: Operating, -32 to 160°F
Storage, 0 to 200°F

MECHANICAL

Weight: 3 lbs

Probe length: 12 inches

Cable length: 6 feet

TO ORDER

E-Mail:

General Information: info@dwyer-inst.com
Technical Inquiries: tech@dwyer-inst.com
Literature Request: lit@dwyer-inst.com
Quotes Request: quotes@dwyer-inst.com

Transmitter Accessories

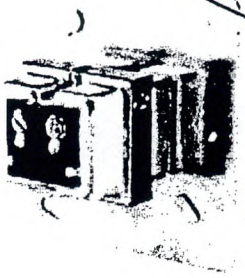

Model A-699 Control Transformer
UL and CSA listed Class 2 step down transformer is mounted on a 4 ¼" square plate stand-off for direct installation in standard 4" x 4" x 1 ½" junction boxes. The A-699 is suitable for powering all Dwyer 4-wire transmitters and Model 660 Air Velocity monitor. Weight 1 lb., 4 oz.

PHYSICAL DATA
Ac Input: 120 VAC, 60 Hz.
AC Output: 24 VAC.
Maximum Current Output: 400 mA (typically). 10 VA max.
Electrical Connections: Primary, 6 ½" leads; Secondary, 6-32 screw terminals. (Manufactured for Dwyer Instruments, Inc.)

To Order

Model A-700 Power Supply
Economical and reliable power supply is suitable for powering all Dwyer pressure, temperature or air velocity transmitters. Inexpensive, open-frame design allows convenient access to input/output solder terminals. Auxiliary inputs are selectable for operation from power sources found worldwide. Compact size eases enclosure installations: 4 7//8"H x 4"W x 1 5/"D. Weight, 2 lbs.

PHYSICAL DATA
AC Input: 100/120/220/230-240 VAC ±10%, 47-63 Hz.
DC Output: 24-29 VDC regulated.
Maximum Current Output: 500 mA (derated to 450 mA @ 50 Hz, operation).
Operating Temperature: 32 to 122°F (0 to 50°C).
External Fuse Required: 0.5 Amp for 100-120 VAC, 0.25 Amp for 220-240 VAC. (Manufactured for Dwyer Instruments, Inc.)

To Order

Hoffman®

Fiberglass Hinged Cover Type 4X Enclosures

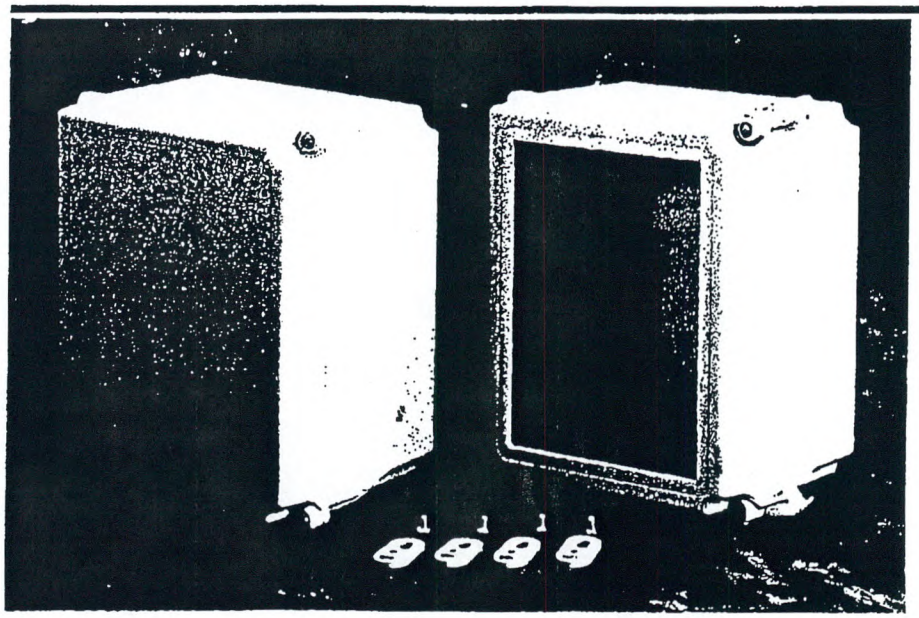

Application

Designed for use as a junction box or instrument housing in both indoor and outdoor settings. The enclosure is used in highly corrosive environments typically found in oil refineries, chemical processing plants, waste water treatment, marine installations, pulp and paper processing, and electroplating plants. The efficient design and simple construction create a low cost, durable, and aesthetic enclosure.

Construction

- Molded fiberglass polyester has outstanding chemical and temperature resistance and exhibits excellent weatherability and physical properties
- Fiberglass is easily punched, drilled, filed or sawed
- Seamless foam-in-place gasket assures watertight and dust-tight seal
- Polyester mounting feet and stainless steel attachment screws are provided with each enclosure
- Scratch-resistant GE Lexan Margard® windows are permanently bonded in place
- Molded-in-place threaded brass inserts and plated steel screws are provided for mounting optional panels and terminal kits
- Removable hinged cover attached to body with monel hinge pin
- Screw cover enclosures are secured with two captivated monel cover screws
- Enclosures with quick-release latches (U.S. patent number 4,917,421) have corrosion-resistant polyester latches located in corners which provide unobstructed access to enclosure
- Hinge pin and bail are corrosion-resistant monel
- Knockout padlock provisions included in each latch

Finish/Color

Optional steel panels are white. Optional stainless steel, aluminum, and composite panels are unpainted. Fiberglass material is light gray inside and out.

Industry Standards

UL 508 Type 4, Type 4X, Type 12, and Type 13
NEMA/EEMAC Type 4, Type 4X, Type 12, and Type 13
Enclosure flammability rating UL94-5V
Window flammability rating UL94V-0
CSA Type 4, Type 4X, Type 12, and Type 13
IEC 529, IP66

Price List Page 6.11

Accessories

See General Accessories index page 9.00

Panels (See table)
Terminal Kit Assembly
Ventilators
Wiring Duct

Contact your local Hoffman Sales Representative for information on modifications to this product.

Standard Sizes Solid Cover Type 4X Enclosures

Catalog Number Screw Cover	Catalog Number Quick-Release	Enclosure Size A x B x C	* Panel Catalog Number	Panel Size D x E	Mounting G x H	Overall L x W	F	J	K	O	P	Q	R	T	U
A-664CHSCFG	A-664CHQRFG	6.00 x 6.00 x 4.00 (152 x 152 x 102)	A-6P6	4.88 x 4.88 (124 x 124)	6.94 x 4.00 (176 x 102)	6.50 x 6.50 (165 x 165)	3.45 (88)	3.25 (83)	1.00 (25)	4.25 (108)	4.25 (108)	5.64 (143)	5.12 (130)	0.12 (3)	5.64 (143)
A-864CHSCFG	A-864CHQRFG	8.00 x 6.00 x 4.00 (203 x 152 x 102)	A-8P6	6.75 x 4.88 (171 x 124)	8.94 x 4.00 (227 x 102)	8.50 x 6.50 (216 x 165)	3.45 (88)	3.25 (83)	1.00 (25)	4.25 (108)	6.25 (159)	7.64 (194)	7.12 (181)	0.12 (3)	5.64 (143)
A-1086CHSCFG	A-1086CHQRFG	10.00 x 8.00 x 6.00 (254 x 203 x 152)	A-10P8	8.75 x 6.88 (222 x 175)	10.94 x 6.00 (278 x 152)	10.50 x 8.50 (267 x 216)	5.45 (138)	4.94 (125)	1.31 (33)	8.25 (159)	8.25 (210)	9.61 (244)	9.12 (232)	0.12 (3)	7.61 (193)
A-12106CHSCFG	A-12106CHQRFG	12.00 x 10.00 x 6.00 (305 x 254 x 152)	A-12P10	10.75 x 8.88 (273 x 226)	12.94 x 8.00 (329 x 203)	12.50 x 10.50 (318 x 267)	5.45 (138)	4.69 (119)	1.56 (40)	8.25 (210)	10.25 (260)	11.58 (294)	11.12 (282)	0.12 (3)	9.58 (243)
A-14128CHSCFG	A-14128CHQRFG	14.00 x 12.00 x 8.00 (356 x 305 x 203)	A-14P12	12.75 x 10.88 (324 x 276)	14.94 x 10.00 (379 x 254)	14.55 x 12.55 (370 x 319)	7.45 (189)	6.50 (165)	1.81 (46)	10.25 (260)	12.25 (311)	13.59 (345)	13.12 (333)	0.15 (4)	11.59 (294)
A-16148CHSCFG	A-16148CHQRFG	16.00 x 14.00 x 8.00 (406 x 356 x 203)	A-16P14	14.75 x 12.88 (375 x 327)	16.94 x 12.00 (430 x 305)	16.55 x 14.55 (420 x 370)	7.45 (189)	6.23 (158)	2.08 (53)	12.25 (311)	14.25 (362)	15.56 (395)	15.12 (384)	0.15 (4)	13.56 (344)
A-181610CHSCFG	A-181610CHQRFG	18.00 x 16.00 x 10.00 (457 x 406 x 254)	A-18P16	16.75 x 14.88 (425 x 378)	18.94 x 14.00 (481 x 356)	18.58 x 16.58 (472 x 421)	9.45 (240)	7.66 (195)	2.66 (68)	14.25 (362)	16.25 (413)	17.53 (445)	17.12 (435)	0.16 (4)	15.53 (394)

Standard Sizes Window Cover Type 4X Enclosures

Catalog Number Screw Cover	Catalog Number Quick-Release	Enclosure Size A x B x C	* Panel Catalog Number	Panel Size D x E	Mounting G x H	Overall L x W	F	J	K	M	N	O	P	Q	R	T	U
A-664CHSCFGW	A-664CHQRFGW	6.00 x 6.00 x 4.00 (152 x 152 x 102)	A-6P6	4.88 x 4.88 (124 x 124)	6.94 x 4.00 (176 x 102)	6.50 x 6.50 (165 x 165)	3.45 (88)	3.25 (83)	1.00 (25)	4.25 (108)	4.25 (108)	4.25 (108)	4.25 (108)	5.64 (143)	5.12 (130)	0.12 (3)	5.64 (143)
A-864CHSCFGW	A-864CHQRFGW	8.00 x 6.00 x 4.00 (203 x 152 x 102)	A-8P6	6.75 x 4.88 (171 x 124)	8.94 x 4.00 (227 x 102)	8.50 x 6.50 (216 x 165)	3.45 (88)	3.25 (83)	1.00 (25)	6.25 (159)	4.25 (108)	4.25 (108)	6.25 (159)	7.64 (194)	7.12 (181)	0.12 (3)	5.64 (143)
A-1086CHSCFGW	A-1086CHQRFGW	10.00 x 8.00 x 6.00 (254 x 203 x 152)	A-10P8	8.75 x 6.88 (222 x 175)	10.94 x 6.00 (278 x 152)	10.50 x 8.50 (267 x 216)	5.45 (138)	4.94 (125)	1.31 (33)	8.25 (210)	6.25 (159)	6.25 (159)	8.25 (210)	9.61 (244)	9.12 (232)	0.12 (3)	7.61 (193)
A-12106CHSCFGW	A-12106CHQRFGW	12.00 x 10.00 x 6.00 (305 x 254 x 152)	A-12P10	10.75 x 8.88 (273 x 226)	12.94 x 8.00 (329 x 203)	12.50 x 10.50 (318 x 267)	5.45 (138)	4.69 (119)	1.56 (40)	10.25 (260)	8.25 (210)	8.25 (210)	10.25 (260)	11.58 (294)	11.12 (282)	0.12 (3)	9.58 (243)
A-14128CHSCFGW	A-14128CHQRFGW	14.00 x 12.00 x 8.00 (356 x 305 x 203)	A-14P12	12.75 x 10.88 (324 x 276)	14.94 x 10.00 (379 x 254)	14.55 x 12.55 (370 x 319)	7.45 (189)	6.50 (165)	1.81 (46)	12.25 (311)	10.25 (260)	10.25 (260)	12.25 (311)	13.59 (345)	13.12 (333)	0.15 (4)	11.59 (294)
A-16148CHSCFGW	A-16148CHQRFGW	16.00 x 14.00 x 8.00 (406 x 356 x 203)	A-16P14	14.75 x 12.88 (375 x 327)	16.94 x 12.00 (430 x 305)	16.55 x 14.55 (420 x 370)	7.45 (189)	6.23 (158)	2.08 (53)	14.25 (362)	12.25 (311)	12.25 (311)	14.25 (362)	15.56 (395)	15.12 (384)	0.15 (4)	13.56 (344)
A-181610CHSCFGW	A-181610CHQRFGW	18.00 x 16.00 x 10.00 (457x406x254)	A-18P16	16.75 x 14.88 (425 x 378)	18.94 x 14.00 (481 x 356)	18.58 x 16.58 (472 x 421)	9.45 (240)	7.66 (195)	2.66 (68)	16.25 (413)	14.25 (362)	14.25 (362)	16.25 (413)	17.53 (445)	17.12 (435)	0.16 (4)	15.53 (394)

Millimeter dimensions ( ) are for reference only; do not convert metric dimensions to inch.

* Panels must be ordered separately. Optional stainless steel, aluminum, and composite material panels are also available for most sizes. See General Accessories.

Fiberglass Hinged Cover
Type 4X Enclosures

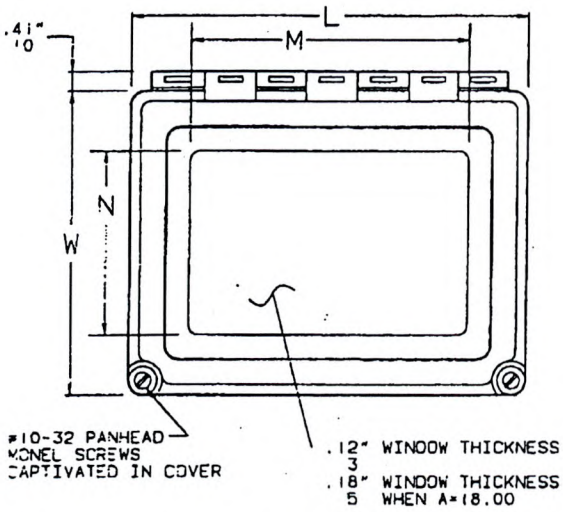

Top View

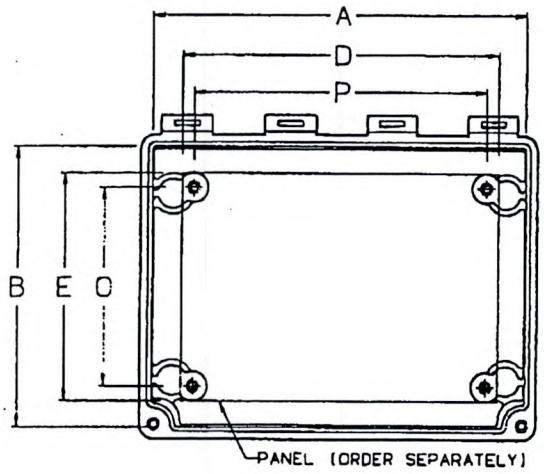

Top View with Cover Removed

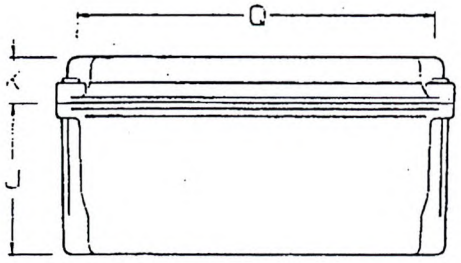

Side View

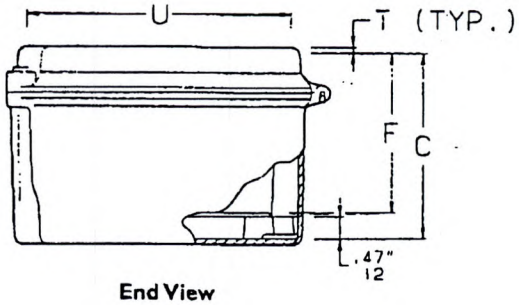

End View

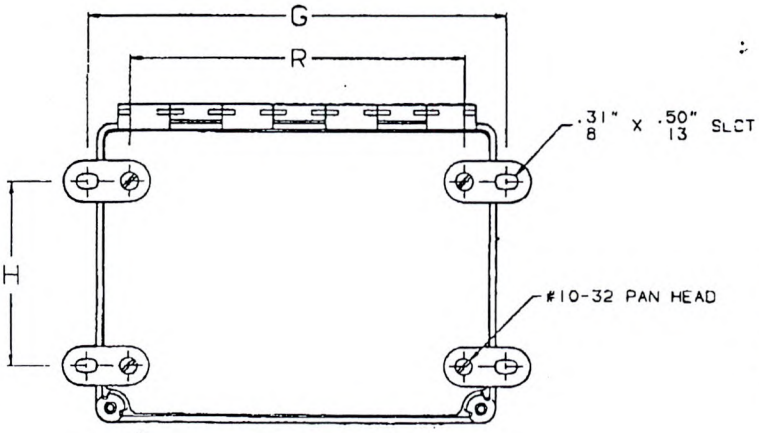

Bottom View

NOTE: 1. Panel screws are #10-32 pan head.
2. Mounting feet are .16 (4) thick.

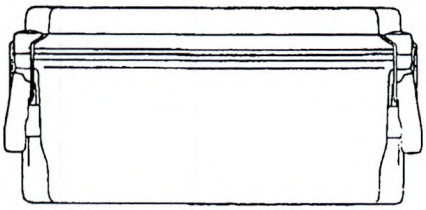

Side View
Quick-Release Cover Enclosure

Inch
Millimeter

72567

Mercoid®

A Division of DWYER INSTRUMENTS, INC.

SERIES FM

Immersion Temperature Control

Visible setpoint adjustment, adjustable deadband

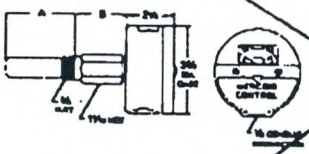

PHYSICAL DATA

Maximum Pressure: Copper well – 200 psig @ 300° F.
304SS well – 900 psig @ 300° F.
Maximum Bi-Metal Temperature: 375°F.
Process Connection: ¾" NPT.
Electrical Rating: 4A @ 120V., 2A @ 240V., both AC & DC., ⅛ HP @ 120VAC or 240VAC. **Switch Type:** Tilting mercury type.
Wiring Connections: Three screw type: common, normally open and normally closed. (SPDT) **Conduit opening:** ½ inch conduit
Set Point Adjustment: High and Low set points set via pointers on (°F.) calibrated dial.
Housing: Heavy gauge steel case with glass window.
Well Material: Copper or Type 304 stainless steel – see chart.
Weight: 3 lbs. **Installation:** Well must be horizontal window vertical.

Compact and low cost, model FM-437 employs a bimetal element inside an immersion well. Instrument is detachable from the well, allowing maintenance without draining system. Visible calibrated dial reduces "start up" time and speeds set point changing. Contacts are hermetically sealed and mercury wetted. High current (up to 17A) capacity switches available on special order.

Copper Well Model No.	Type 304SS Well Model No.	Operating Temp. Range	Deadband Min.	Deadband Max.	Well Dim. A	Well Dim. B
FM-437-153-3515	FM-437SS-153-3515	40-200° F.	15	160	2⅞"	2⅜"
FM-437-153-3516	FM-437SS-153-3516	40-200° F.	15	160	4½"	¾"
FM-437-153-3510	FM-437SS-153-3510	80-240° F.	15	160	2⅞"	2⅜"
FM-437-153-3511	FM-437SS-153-3511	80-240° F.	15	160	4½"	¾"
FM-437-153-3528	FM-437SS-153-3528	160-300° F.	18	140	2⅞"	2⅜"
FM-437-153-3529	FM-437SS-153-3529	160-300° F.	18	140	4½"	¾"

Prices
FM-437 Models (with copper well) $160.00
FM-437SS Models (with 304 stainless steel well) 196.00

Suggested Specification:

Temperature switches shall be immersion type with (copper) (type 304 stainless steel) well. Switches shall be separable from well and shall be repairable without shutting down process. Bi metal element shall operate hermetically sealed mercury switch. Switches shall have °F calibrated dial and two pointers indicating set and reset points. Switches shall require no power supply. Switches shall be Mercoid Model No. FM-437-(_ _ _).

SERIES 860

Line Voltage Thermostats

Built-in thermometer, heavy duty construction.

860-153-61 OK'd 2-20

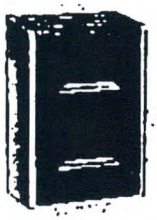

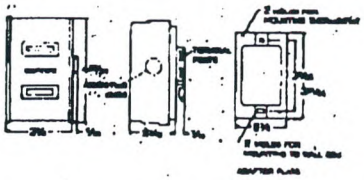

PHYSICAL DATA

Temperature Limits: – 10 to 140° F.
Electrical Rating: See Chart. **Deadband:** approx. 2-4°F
Wiring Connections: Standard – screw type terminals, explosion-proof-pigtail leads for connection inside junction box.
Conduit Opening: ½" on explosion-proof model. Standard unit mounts on standard wall switch box.
Set Point Adjustment: Removable knob at side of unit.
Housing: Standard units have plastic housing. Explosion-proof units have cast aluminum housing containing electrically live parts. Thermostat mechanism is located in front of housing for better sensitivity; mechanism is covered by plastic cover.
Actuation: Liquid filled brass bellows. **Installation:** Vertical.
Weight: Standard unit – 1.5 lbs. Explosion-proof unit – 4.5 lbs.

Heavy duty and reliable, Model 860 Line Voltage thermostat is designed for direct control of motors operating HVAC equipment in industrial environments. Hermetically sealed mercury switch resists dust, dirt, grease and moisture. Cadmium plated steel and brass mechanism resists corrosion. Set point is easily adjustable via knurled knob located on the side of the unit. Knob may be removed to prevent tampering. Contacts rated up to 17A available on special order.

Model No. SPDT ①	Model No. SPST ②	Operating Range, °F	Housing	Price
860-153-61	860-2-61	25-60	Indoor	$132.00
860-153-62	860-2-62	38-70	Indoor	132.00
860-153-63	860-2-63	56-80	Indoor	132.00
860-153-64	860-2-64	65-90	Indoor	132.00
860-153-65	860-2-65	80-110	Indoor	147.00
860EH-153-61	860EH-2-61	25-60	Expl. Pr.	327.00
860EH-153-62	860EH-2-62	38-70	Expl. Pr.	327.00
860EH-153-63	860EH-2-63	56-80	Expl. Pr.	327.00
860EH-153-64	860EH-2-64	65-90	Expl. Pr.	327.00
860EH-153-65	860EH-2-65	80-110	Expl. Pr.	342.00

① Three terminals, common, normally open, normally closed, 4A @ 120V., 2A @ 240V., (AC or DC). ⅛ H.P. @ 120/240 VAC 1Ø (Not U.L. or C.S.A. listed.)

② Two terminals: common, normally closed (opens on temperature rise). 10A @ 120V., 5A @ 240V., AC or DC. ¾ H.P. @ 120/240 VAC 1Ø, ¼ H.P. @ 120/240 VDC. Normally open (instead of standard normally closed contact) is available on special order.

Suggested Specification:

Thermostats shall have heavy duty contacts suitable for 120/240V. operation. Contacts shall be hermetically sealed and mercury wetted. Units shall include integral thermometer. Enclosures shall be (indoor) (explosion-proof) type. Units shall be bellows actuated and shall have removable set point adjust knob. Units shall be Mercoid Model 860.

SERIES 3000 SGT PHOTOHELIC®
DIFFERENTIAL PRESSURE SWITCH/GAGE/TRANSMITTER

Specifications – Installation and Operating Instructions

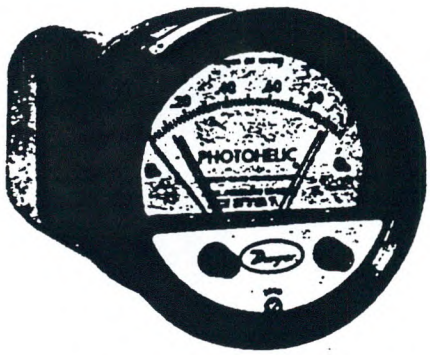

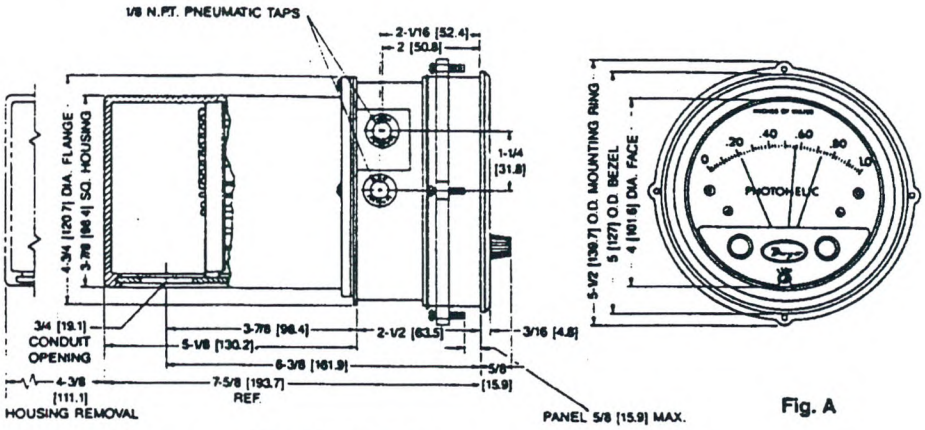

Fig. A

The PHOTOHELIC® Series 3000 SGT is a versatile 3-in-1 instrument combining a time-proven Magnehelic® differential pressure gage, low/high limit pressure switches and a 4-20 mA pressure transmitter. It is designed to measure and control positive, negative or differential pressure of air or other non-combustible, non-corrosive gases. Gage reading is unaffected by switch or transmitter operation. Switch set points are easily adjusted with knobs located on gage face. Applied pressure and switch set points are fully visible at all times. Deadband is one pointer width, less than 1% of full scale. Each set point controls a DPDT relay and both can be interlocked to provide variable deadband control. The 2-wire transmitter operates independently, driven by a separate external 12.3-35 VDC power supply. Separate zero and span potentiometers are provided inside the rear electronics package for easy field adjustment.

PHYSICAL DATA

Ambient Temperature Range: 20 to 120°F (– 6.7 to 49°C)
Maximum Pressure: 25 PSIG (1.75 KG/CM²); MP option – 35 PSIG (2.46 KG/CM²); HP option – 80 PSIG (5.62 KG/CM²)
Accuracy: ± 2% of full scale at 70°F (21.1°C)
Pressure Connections: 1/8" NPT female
Case Finish: Baked dark gray epoxy enamel
Conduit Opening: 3/4"
Standard Accessories: (2) 3/16" tubing to 1/8" NPT brass adapters for rubber or vinyl tubing, (1) mounting ring, (1) snap ring, (4) 6-32 × 2" mounting screws, instructions
Compatibility: Use only with air or other non-combustible, non-corrosive gases
Weight: 4 lbs., 12 oz. (2.15 KG)

ELECTRICAL SPECIFICATIONS (Switches)
Power Supply: 117 VAC
Current Consumption: 5 watts average
Contact Rating: 10A @ 24 VDC or 120 VAC, 6A @ 240 VAC.

ELECTRICAL SPECIFICATIONS (Transmitter)
Power Supply: 12.3 to 35 VDC
Output Signal: 4-20 mA DC, 2-wire (limited at 38 mA)
Loop Resistance: 0-1135 ohms
Current Consumption: 38 mA DC, maximum
Span and Zero Adjustment: Multi-turn potentiometers, internally accessible.
Thermal Errors: ± 1% per 50°F typical
Warm-up Time: 10 minutes

INSTALLATION

1. **Location:** Select a clean, dry, vibration-free location where ambient temperatures will be between 20 and 120°F (–6.7 and 49°C). Tubing supplying pressure to the instrument can be practically any length but long runs will increase response time slightly.
2. **Position:** The PHOTOHELIC® SGT is factory calibrated for use with scale in a vertical plane. Operation at other angles may affect accuracy and/or require zero adjustment. Most models can be specially calibrated at the factory for other positions if specified at time of ordering. Ranges below 1" w.c. must be used only with scale vertical.
3. **Mounting:** Normal mounting is flush or through panel as shown in Fig. B. Allow 4⅜" space behind the unit for electrical enclosure removal. Make 4¾" diameter hole in panel. When installing multiple units, it may be preferred to obtain a Model 730E, 120 MM chassis punch as manufactured by Greenlee Tool Co. and available from your machine tool distributor.

   Insert PHOTOHELIC® unit from front of panel, slip the mounting ring over the case from rear and seat the snap ring in its groove. Thread the (4) 6-32 × 2" machine screws into mounting ring, back it against snap ring and tighten screws to back of panel. An alternative to flush mounting is the optional A-371 Surface Mounting Bracket. Unit is mounted in this bracket as described above and bracket is then surface mounted. Contact factory for details.

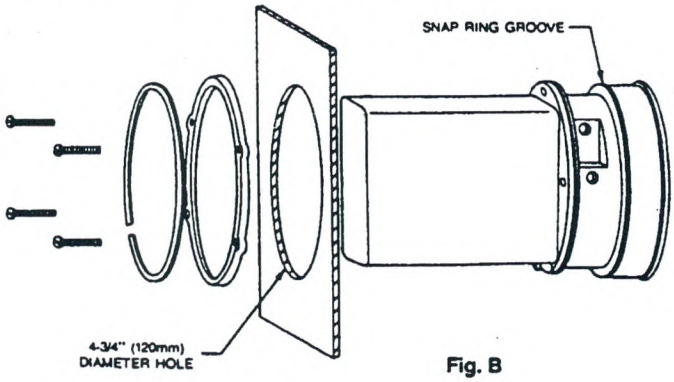

Fig. B

4. **Zeroing & Pneumatic Connections:** After unit is installed in its final mounting position, use the screw at bottom of front cover to adjust pointer for exact zero reading. This must be done with both pressure ports open and vented to atmosphere.

(A) For positive pressure, connect tubing to HIGH PRESSURE port and vent LOW PRESSURE port to atmosphere.

(B) For negative pressure (vacuum), connect tubing to LOW PRESSURE port and vent HIGH PRESSURE port to atmosphere.

When either port will be left open to atmosphere, we suggest installation of optional A-331 Filter Vent Plug to keep gage interior clean.

(C) For differential pressure, connect higher pressure to HIGH PRESSURE port and lower pressure to LOW PRESSURE PORT.

NOTE: If the PHOTOHELIC® SGT is over-pressured beyond its full scale range, pointer could jump from full scale back to zero and remain there until the excess pressure condition is relieved. Users should be aware that this condition would cause a false indication of zero pressure and subsequently affect set-points and transmitter output signal.

SWITCH/GAGE WIRING CONNECTIONS

To make electrical connections, remove the (3) cover screws and slide cover off. All wiring should be fed through flexible conduit attached to conduit opening at bottom of electrical package. Conduit should be attached to the panel or other suitable support to avoid excess strain on the instrument. See Fig. C.

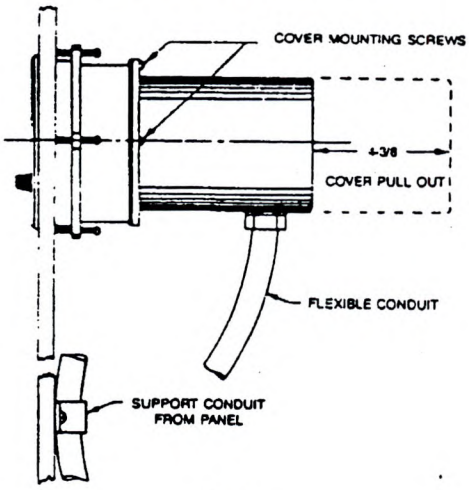

Fig. C

1. **Low/High Set-Point Wiring Connections**
The rear terminal board contains connections for low and high set-points, holding coil circuits and line power supply. Transmitter connections are located behind this terminal board. See TRANSMITTER WIRING CONNECTIONS for complete information.

Section A contains DPDT connections for the right or high set-point and Section D contains identical connections for the left or low set-point.

Terminals in Section B are for control of the holding coil circuit for the right, high set-point and Section C contains identical connections for the left, low set-point. These holding coil circuits are typically used to allow latching set-points with manual reset or for adjustable deadband operation with one set-point wired to reset the other. See paragraphs 3 and 4 for details. Do Not Connect Line Current to Sections B or C.

Section E (L1 and L2) contains power supply connections for the control unit transformer primary. The transformer in turn supplies reduced voltage power for the LED, phototransistor, amplifier unit, load relay pull-in and holding coils. Connections must always be made to this section for the unit to operate. Standard units require 117V AC but options are available for other power sources. See label on terminal board for correct voltage and circuit style.

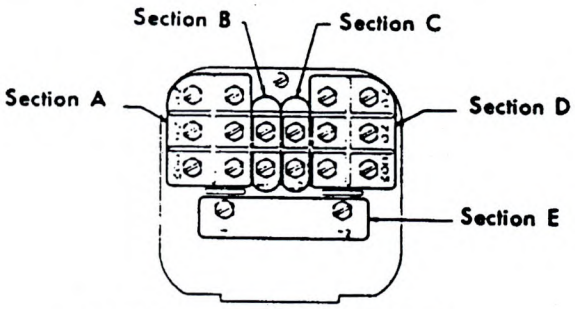

CAUTION: Do not apply electrical current to terminals in Sections B and C.

Fig. D

Separate Ground Wire attachment is provided for by a No. 6-32 screw on the mounting bracket near the conduit opening.

Single Set-Point instruments are furnished with the right or high set-point components and circuitry in place. These are connected to Sections A and B of the terminal board. The left or low set-point components are omitted.

2. **Circuit Style:** The PHOTOHELIC® is available with several factory installed optional internal circuits. They are identified as to style by a label shown in Fig. E. This label is mounted prominently on the terminal board of each instrument. The letter H denotes a circuit in which the relay can be made to latch or remain energized after pressure increase to its set-point.

The letter L denotes a circuit in which the relay can be made to latch or remain de-energized after pressure decreases to its set-point. Two letters are required to fully identify a dual set-point unit. Thus, circuit style HH, which is standard, is a dual set-point circuit which has provisions for latching on pressure increase to either set-point. Single relay units are identified by the letters SR followed by H for the standard unit or L for the special low latch unit. Units for use with other than standard 117 VAC will be so indicated on the label.

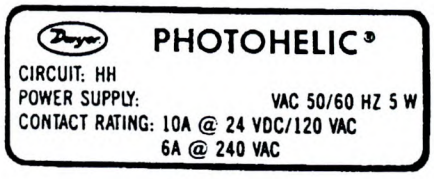

Fig. E

3. **Dual Set Point Automatic Reset:** Circuit Style HH is used for simple on-off switching applications. To place in service, connect load circuits to the appropriate terminals in Section A (Fig. D) for the right set-point and Section D for the left set-point. Note that the N.O. contacts are open when the gage pressure pointer is to the left of the set-point pointers. No connections are necessary in Sections B and C. Make external ground connections as required and connect power to Section E for the control unit. To use circuit style LL for automatic reset, a jumper wire must be installed between the upper and lower terminals in Sections B and/or C.

4. **Dual Set Point Manual Reset:** Circuit Style HH may also be used for manual reset applications where it is desired to have maintained contact on either relay following pressure increase above its set-point. Load or signal connections are made to the appropriate terminals in Sections A and D (as in paragraph 3 above). Connect terminals in Sections B and C through normally closed switches or push buttons as shown in Fig. F. Use of "dry-circuit" type switches such as Dwyer Part No. A-601 with paladium, gold, etc. or rotary wiping action type contacts is recommended. Make external ground connections as required and connect power to Section E for the control unit.

   Circuit style LL is used for manual reset applications which require that contact be maintained following pressure decrease below the set-point. Load connections are made to the appropriate terminals in Sections A and D. A normally open type manual reset switch such as Dwyer Part No. A-601 is connected to the terminals in Sections B and C. The circuit must be reset or "armed" by momentarily closing the switch while the black pointer is to the right of the set-point. From that point on, the circuit will latch on pressure decrease below the set-point and remain latched on pressure increase until manually reset with the optional switch.

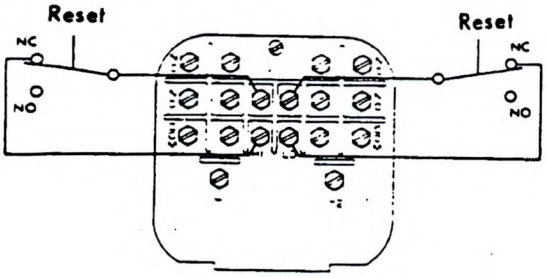

CAUTION: Do not apply electrical current to terminals in Sections B and C.

Manual Reset with Circuit HH

Fig. F

5. **Dual Set Point Automatic and Manual Reset Combinations:** Circuit style HH may be used with either set-point wired and operating with automatic reset as described in paragraph 3 above and other set-point wired and operating with manual reset as described in paragraph 4.

6. **High Low Limit Control – Dual Set-Point:** Circuit Style HH may be used to control fans, dampers, pumps, etc., between the set-points of a PHOTOHELIC® To accomplish this, use one set-point relay to reset the other as shown in the wiring diagram Fig. G. In this typical application, the load (for instance a fan) would be connected to the N.C. contacts of the right set-point relay, Section A (Fig. D). On pressure rise to the right set-point, its relay would pull in and hold even though pressure might then fall below that set-point. If the pressure continued to fall to the left set-point, its relay would automatically be DE-ENERGIZED, returned to its normal position and in so doing, open the holding coil circuit from Section B (Fig. D). The right set-point relay would thus be reset and the cycle could repeat.

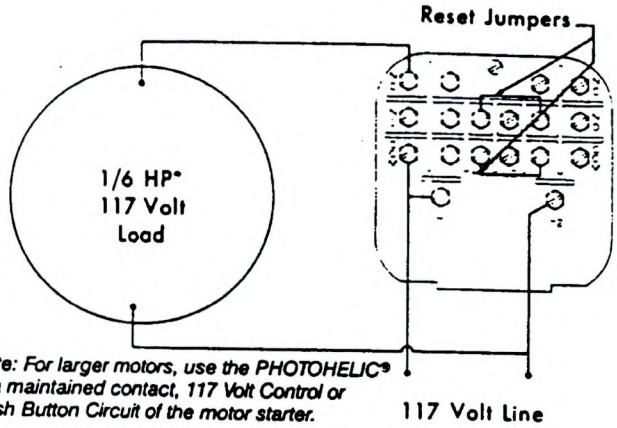

**Note: For larger motors, use the PHOTOHELIC® in a maintained contact, 117 Volt Control or Push Button Circuit of the motor starter.*

High-Low Limit Control (Circuit HH)

Fig. G

7. **Dual Set-Point Special Purpose Circuits:** Circuit Style LL may be used where manual reset following maintained contact on pressure decrease to either set-point is desired. Circuit Styles HL and LH are combination units. For special combinations of features, special units, and detailed instructions regarding their use, consult the factory.

8. **Single Set-Point PHOTOHELIC®:** The single set-point PHOTOHELIC® is furnished with the right set-point only. Terminals in Sections A and B (Fig. D) are connected to this relay. Circuit Style SRH is wired for automatic reset as in paragraph 3 above. Manual reset is accomplished by adding a normally closed reset switch or push button to the circuit as described in paragraph 4 above.

9. **Single Set-Point Special:** Manual reset after actuation on falling pressure can be obtained by using Circuit Style SRL. Consult the factory for special units and detailed instructions regarding their use.

10. **Placing in Service:** In normal operation each relay is de-energized when the pressure applied to the instrument is below its set-point. Special low-latching units will ordinarily have to be reset before placing on the line in normal operation.

11. **Failure Mode:** The PHOTOHELIC® circuit design provides certain protection in the event of a loss of pressure or electrical power. In either case, both relays will de-energize, returning to their normal "zero pressure" state. The exceptions to this are models with center zero ranges. Because the relays on all standard models are always energized when the indicating (black) pointer is to the right of their respective set points, the relay action on loss of pressure will depend on set-point position. since either of them could be located to the left of zero. As an example; if the left pointer were set at −2 in. w.c. and negative pressure was −3 in w.c., a loss of that pressure would allow the black pointer to return to the center and thus cause the low set-point relay to energize.

    If the LED should burn out, only the left-low relay will de-energize. The right-high relay will react as if pressure were above its set-point and will remain energized even though pressure might be below that setting. In this situation, only termination of electrical power will allow the right-high relay to de-energize.

TRANSMITTER WIRING CONNECTIONS

Electrical connections for the two-wire, 4-20 mA transmitter circuit are made to the small terminal block mounted behind the larger switch/gage terminal board. Wiring should enter this area through the 5/8" dia. hole at bottom of electronics chassis. See Fig. H.

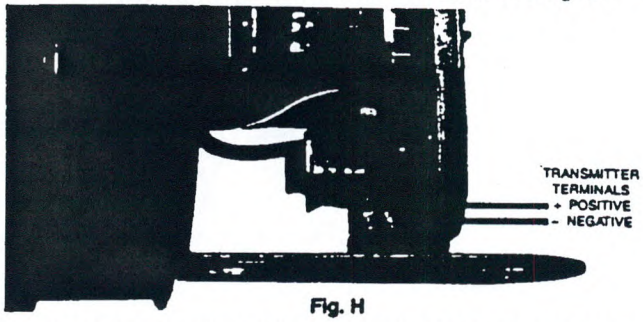

Fig. H

The transmitter function of the PHOTOHELIC® SGT operates independent of the low/high switch set-points and requires a separate external power supply delivering 12.3 to 35 VDC with minimum current capability of 40 mA to power its control loop. Refer to Fig. J for connection of the power supply, transmitter and receiver. The range of appropriate receiver load resistance (R_L) values for various power supply voltages is defined by the formula and graph in Fig. K. Shielded two wire cable is recommended for control loop wiring and the negative side of the loop can be grounded if preferred. The receiver can be connected in either the positive or negative side of the loop. If the polarity of the transmitter or receiver is inadvertently reversed, the loop will not function properly but no damage will be done to the transmitter.

The maximum wire length between the transmitter and receiver is a function of wire size and receiver resistance. Connecting wires should not contribute more than 10% of the receiver resistance to total current loop resistance. Where long runs (over 1,000 feet) are required, select receivers with higher resistances to minimize size and thus cost of wiring. For runs up to 100 feet, wire as small as 24 AWG can be used.

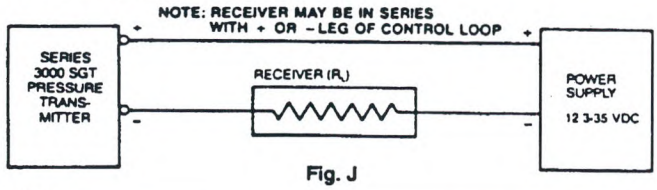

Fig. J

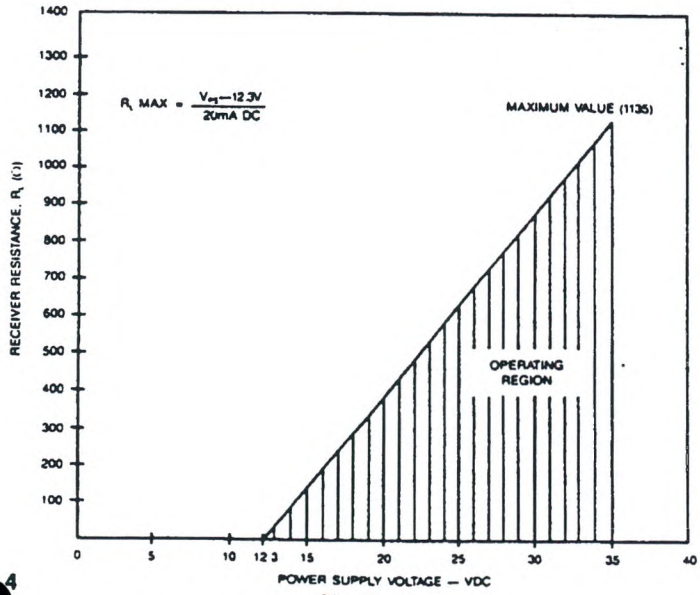

Fig. K

Voltage Input

The PHOTOHELIC® SGT Transmitter can easily be adapted for receivers requiring 1-5 VDC input. Insert a 250 ohm, 1/2 watt resistor in series with the current loop but parallel to the receiver input. Locate this resistor as close as possible to the receiver input. Because resistor accuracy directly influences output signal accuracy, we recommend use of a precision ±0.1% tolerance resistor to minimize this effect.

Transmitter Output Calibration

Each unit is factory calibrated to produce 4 mA DC of loop current at zero pressure and 20 mA DC at full scale. To check calibration use the following procedure.

1. Connect a controllable source of pressure to the high pressure port and leave the low pressure port vented to atmosphere.
2. With transmitter connected to its companion receiver and power supply, insert an accurate milliameter ranged to approximately 30 mA in series with the current loop.
3. Apply electrical power to the system and check for proper operation. Slowly apply pressure and confirm that loop current increases above the 4 mA zero pressure value.
4. Span and zero controls are located behind the terminal board as shown in Fig. L. Apply pressure until gage reads full scale and adjust span control for 20 mA loop current.

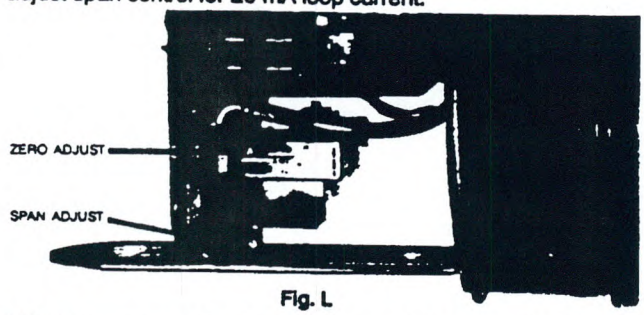

Fig. L

5. Relieve pressure and adjust the zero control for a reading of 4 mA loop current.
6. Zero and span controls are slightly interactive so steps 4 and 5 should be repeated until outputs are consistently 4 and 20 mA, respectively.
7. Remove the milliameter from the current loop, make connections to system pressure sources and place unit in service.

Multiple Receiver Installation

An advantage of the standard 4-20 mA DC output signal used in Series 3000 SGT switch/gage/transmitters is the compatibility with a wide range of receivers. Devices such as the A-701 Digital Readout, a chart recorder and other process control equipment can all be operated simultaneously. It is only necessary that all devices be designed for a standard 4-20 mA DC input, the proper polarity of input connections be observed and the combined receiver resistances not exceed the maximum for the current loop. If any receiver indicates a negative or downscale reading, the signal input leads are reversed.

Maintenance

After final installation of the PHOTOHELIC® Switch/gage/transmitter no routine maintenance is necessary. A periodic check of calibration is recommended following the procedure under TRANSMITTER OUTPUT CALIBRATION. Otherwise, these units are not field repairable and should be returned, freight prepaid, to the following address if service is necessary. Be sure to include a brief description of the problem plus any relative application information available.

Dwyer Instruments, Inc.
Attn: Repair Department
55 Ward Street
Wakarusa, IN 46573

FR 13-440202-03
Litho in U.S.A. 8/92
© Copyright 1992 Dwyer Instruments, Inc.

DWYER INSTRUMENTS, INC.
P.O. Box 373, Michigan City, Indiana 46360, U.S.A.

Messenger™ is simple and straightforward.

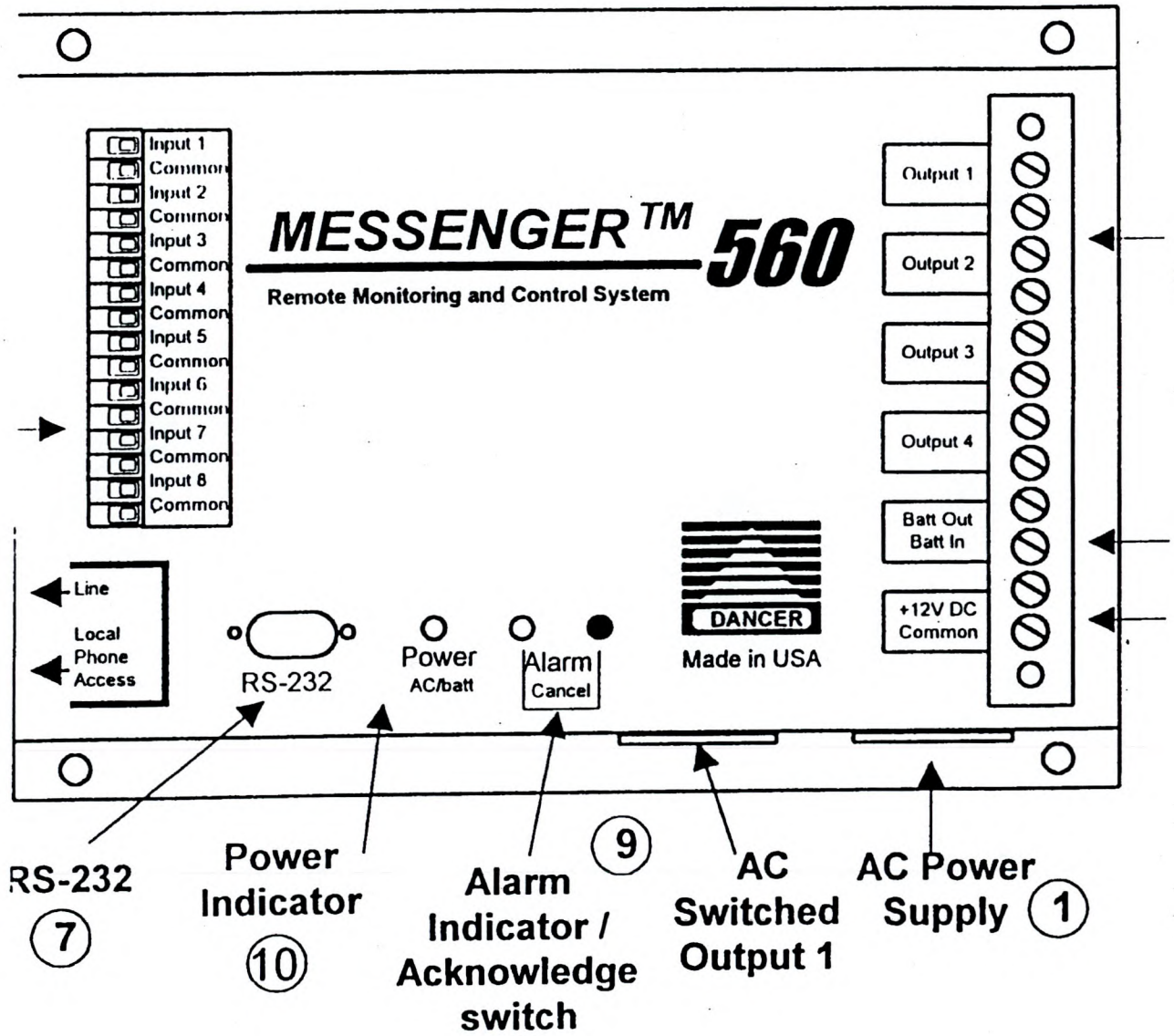

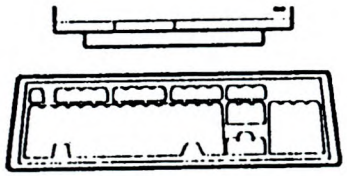

Terminal

Figure A: Messenger Series 560 Remote Monitoring, Alarm, and Control

DANCER

REMOTE POSSIBILITIES℠

The Messenger™ 500 Series

The Remote Monitor

from Dancer Communications Inc., the Price-Performance Leader

Messenger 530

- Eight user-defined analog/digital inputs
- Voice and data modes
- Automatic alarm dialout
- Remote and local status inquiry
- Built-in modem
- Built-in voice annunciator
- Pre-loaded vocabulary
- Easy to install and use
- Works with any communications software or any ASCII terminal
- Non-volatile memory
- Security protection
- Reliable operation

Messenger 550

All the features of the 530, PLUS...

- Four heavy-duty outputs
- Programmable controller
- Built-in data logger
- 24-hour battery backup
- Switchable AC outlet
- Real-time clock

Messenger 560

All the features of the 550, PLUS...

- Pulse counting and totalization
- AC power monitor
- Local phone access
- Line seizure

Messenger 570e

All the features of the 560, PLUS...

- Capabilities of a high-end monitoring system
- Communicates with fax machines and alphanumeric pagers
- Supports standard, ISDN, and RF modems at speeds up to 28.8 Kbps
- Records up to 10,000 events

The Standard of Excellence. *It's a name that our Messenger 500 Series Remote Monitors has rightfully earned. By setting the pace in technological innovation, and reliable operation; and at a price that makes the Messengers as easy to afford as they are to use.*

A standard built around a technology proven in billions of hours of operation worldwide. In remote locations that range from antenna farms to zoological gardens

A standard built around upward compatibility; familiar Windows® software; a wide range of input/output options; limitless communications capabilities; easy installation, programming, and utilization; open ASCII protocol; and local and remote access and alarm options.

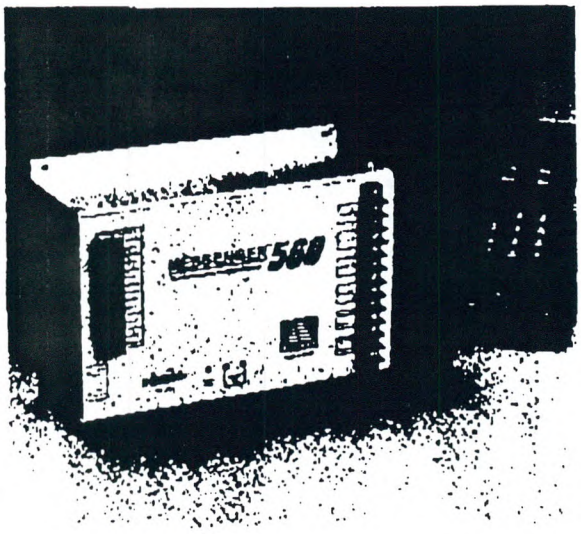

Wide range of I/O options — User-defined analog/digital input channels, each with programmable alarm and control setpoints, can accept 0 to 5 VDC, 4 to 20 mA, TTL logic, switch contacts, or thermistor inputs in any combination. The Messenger 560 and 570e also provide the ability to count pulses, totalize, and measure RPMs. Outputs can manually or automatically switch heavy loads.

Sensible combination of voice and data — Only the Messenger system provides voice and data communications capabilities in its price range. And the Messenger 570e is the first remote monitor to add fax dialout capability as well. Powerful, easy-to-use data mode and simplified voice mode allow access to your equipment anytime, from anywhere via phone, PC, pager, cellular phone, or printer.

The data mode allow you to review inputs and outputs, control outputs (550, 560, and 570e), set up and reconfigure any Messenger from a remote location, retrieve stored information, tie into wide-area networks, and perform diagnostics.

The voice mode offers the convenience of inquiry into condition status from any standard telephone, and provides a high-quality, clear, consistent voice without the need for set up, programming, or recording. Outputs can be turned on or off using a touch-tone phone.

Automatic alarm dial-out — In a single dial-out sequence, the Messenger enables you to contact people in voice mode and PCs in data mode, as well as send data to pagers, etc. The Messenger responds promptly and reliably to potential problems, automatically alerting — in either voice or data mode — up to eight designated numbers and recycling until the alert is acknowledged.

Remote and local status inquiry — The Messenger system can be called at any time, from any place, to get a comprehensive status report on all conditions being monitored. Up-to-the moment information is always available — in person, over standard telephone lines using a touch-tone phone, via a modem to a computer, or printed.

Broad communications capability — The Messenger Remote Monitoring, Alarm, and Control system can communicate with you over standard telephone lines to your office telephone, computer, cellular phone, and a pager. The easily accessible front panel RS-232 port, which also serves as a serial printer port, allows any computer or ASCII terminal device to access the system. A unique Gateway feature allows remote communications to any RS-232 attached device (e.g. PLC), using the built-in modem.

Pre-loaded vocabulary — Messenger units are pre-programmed with standard alarm and status messages.

Easy to install, program, and use — Connecting a Messenger to your equipment or process, and putting its capabilities to work for you is effortless. A few simple commands — supported by on-line menu screens and clear user documentation — is all it takes to put its capabilities to work for you. And there are no programming languages to learn.

Works with any communications software or any ASCII terminal — Messenger's open protocol enables the system's features to be utilized with any communications software supporting Dancer's Open ASCII protocol, including those built into Windows.

Security Protection — Three levels of password protection and controller access restrictions dictate who can do what with your system — from simply obtaining specific status reports to broad system administration privileges.

Reliable operation — Operational reliability is ensured with technology proven in billion of hours of operation, non-volatile EEPROM memory that will retain your set-up and data, weather-resistant or explosion-proof enclosures that ensure reliable operation in demanding environmental or industrial settings, and Messenger's proud "Made in USA" trademark Dancer backs this with five-year parts/one-year labor warranties

Programmable controller (550, 560, 570e only) — A simple, yet powerful algorithm controls the Messenger's outputs, reflecting user-defined setpoints on the inputs, even forcing the outputs into a "fail-safe" status when certain fault conditions are detected. This built-in control feature can eliminate the need for a separate programmable logic controller. Outputs can be easily changed via phone or modem. All control parameters can also be easily set and changed

Built-in data logger (550, 560 and 570e only) — Records up to 10,000 events with a time/date stamp along with the values of all inputs, outputs, and alarm flags to track performance in much the same way as the familiar airplane black box. All information is saved in an industry-standard, comma-delimited text file format which can be readily accessed for analysis by any program (such as Word or Excel) to archive data, schedule preventive maintenance, analyze energy efficiency, or record equipment problems or failures. This information is compressed prior to transmission to reduce telecommunications costs.

24-hour battery backup (550, 560, 570e only)— Rechargeable 24-hour gel-cell battery ensures uninterrupted operation during power outage.

Switched AC outlet (550, 560, 570e only) — Built-in, controllable AC outlet facilitates access to standard appliances.

AC power monitor (560, 570e only) — Checks AC on/off status and initiates alarm indicator.

Local phone access and line seizure (560, 570e only) — The local phone access feature permits all voice mode capabilities to be available locally via a touch-tone phone. Line seizure ensures that the Messenger system will have priority over other devices attached to the same phone line.

Customization (optional) — A trademark of Dancer service is our commitment to meeting your unique requirements — to modify our off-the-shelf product to meet specific user needs. Ask your sales representative about this service.

Accessories — Dancer offers a broad range of accessories. Ask your sales representative for details.

	530	550	560	570E
TELECOMMUNICATIONS				
Voice Mode	✓	✓	✓	✓
Data Mode	✓	✓	✓	✓
Modem	300	300	2400	28.8K
General Features				
Local Phone Access			✓	✓
ASCII Terminal Support	✓	✓	✓	✓
ISDN, RF Modem Support				✓
RS-232 DATA PORT				
RS-232	4800	4800	4800	9600
ASCII Terminal Support	✓	✓	✓	✓
Gateway	✓	✓	✓	✓
Printer Compatible	✓	✓	✓	✓
I/O STRUCTURE				
Total I/O Point Count	8	13	13	13
Analog/Digital Inputs	8	8	8	8
Scaling/Field Calibration	✓	✓	✓	✓
Resolution (bits)	8	12	8/10	10
0 to 5V (analog)	✓	✓	✓	✓
TTL (digital)	✓	✓	✓	✓
4 to 20 mA (analog)	✓	✓	✓	✓
Thermistor (analog)	✓	✓	✓	✓
Dry Contact (discrete)	✓	✓	✓	✓
Totalized Pulse Counting		✓	✓	✓
RPM		✓	✓	✓
Discrete I/O		4	4	4
High Current Relays		✓	✓	✓
Built-In I/O				
AC Power Detect			✓	✓
ALARM HANDLING				
Alarm Dial-out	✓	✓	✓	✓
Alphanumeric Pager	8/24	8/24	8/24	✓
Fax Dialout				✓
E-mail (through VDCEN)	✓	✓	✓	✓
Phone Numbers/Digits	8/24	8/24	8/24	8/24
Alarm Cancel Switch	✓	✓	✓	✓
Alarm Indicator LED	✓	✓	✓	✓
Alarm Beeper	✓	✓	✓	✓
DATA LOGGING				
Data Logger Records		2000	2000	10000
XMODEM File Transfer		✓	✓	✓
OTHER FEATURES				
Switched AC Outlet		✓	✓	✓
Security & Identification	✓	✓	✓	✓
Customization (optional)	✓	✓	✓	✓
Line Seizure		✓	✓	✓
Real Time Clock		✓	✓	✓
POWER & BATTERY				
110 or 220 VAC - or - 12VDC @ 500mA	✓	✓	✓	✓
Auxiliary DC Output		12@ 1A	12@ 1A	12@ 1A
Battery Backup		24hr	24hr	24hr
OTHER				
7" x 10" x 4"	✓	✓	✓	✓
Optional NEMA 4 Enclosure	✓	✓	✓	✓

NEW! VIXEN REMOTE MONITORING SERVICE

Does the thought of inputs and outputs, wide-area networks, and communications protocols put hurdles between you and remote monitoring?

No longer. Vixen Remote Monitoring Service delivers the information you want about your remote or unattended sites. When you want it. Where you want it. How you want it. And like any utility, you pay just for what you need. No more, no less.

It's a new way of delivering information about equipment, process, and facilities at remote locations. And it is available now.

Ask your Dancer sales representative for information.

Need more information?
Call 800-2-DANCER

dancer communications, inc.
649 south avenue ▪ building 6 ▪ secane, pa 19018
phone: 610-543-8066 ▪ fax: 610-543-2151
email: dancer@remotepossibilities.com
website: www.remotepossibilities.com

DANCER

DANCER

Technical Note

Messenger 560

Quick Installation Guide

Following the guidelines below, the installation of the Messenger™ is simple and straightforward.

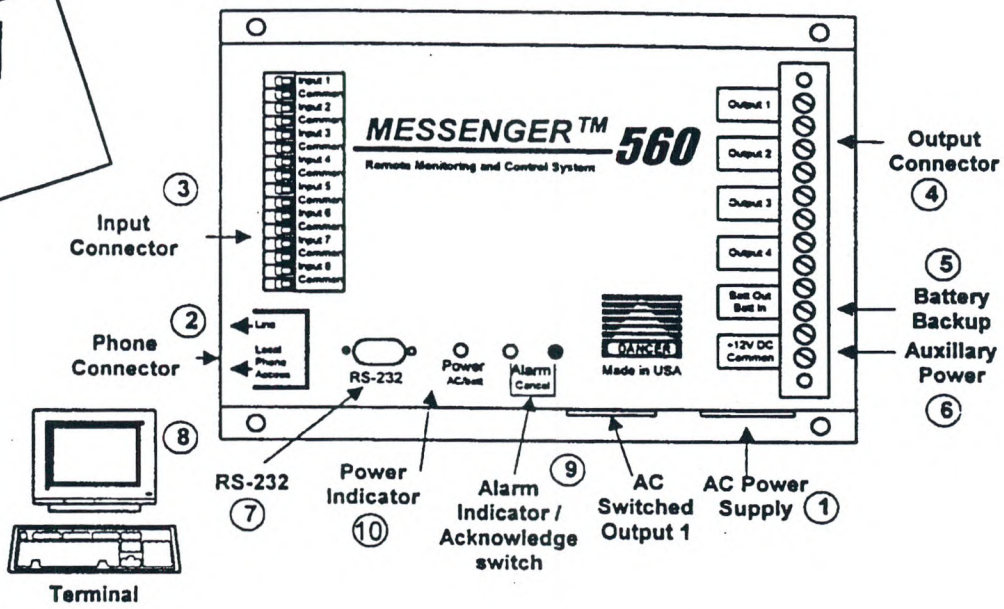

Figure A: Messenger Series 560 Remote Monitoring, Alarm, and Control System

1 Connect to AC Power Supply

Plug the power cord supplied into the Messenger. Connect the other end into a properly grounded (3 wire) electrical outlet.

2 Connect to a Phone Line

Plug the telephone cord supplied into the Messenger connector labeled 'Line'. Connect the other end into an RJ-11 telephone outlet.

3 Configuring the Inputs

The inputs are factory configured to accept a 'dry-contact' or thermistor input. To configure an input for a 0-5VDC or 4-20mA sensor type, remove the input connector and set the 'Shunt' and 'Pull-Up' DIP switches as follows:

Sensor Type	Switch Settings
4-20 mA	Shunt = ON, Pull-Up = OFF
0-5 VDC	Shunt = OFF, Pull-Up = OFF
Thermistor	Shunt = OFF, Pull-Up = ON
Dry Contact	Shunt = OFF, Pull-Up = ON

Use the INP S command for scaling.

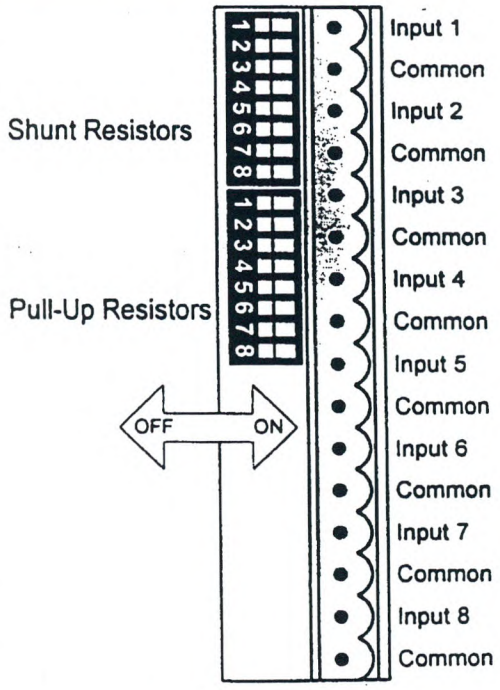

Figure B: Input Connector

DANCER

Technical Note

Messenger 5XX

Input Setup Guide: Dry Contacts

Following the guidelines below, configuring the inputs of the Messenger™ for dry contacts is simple and straightforward.

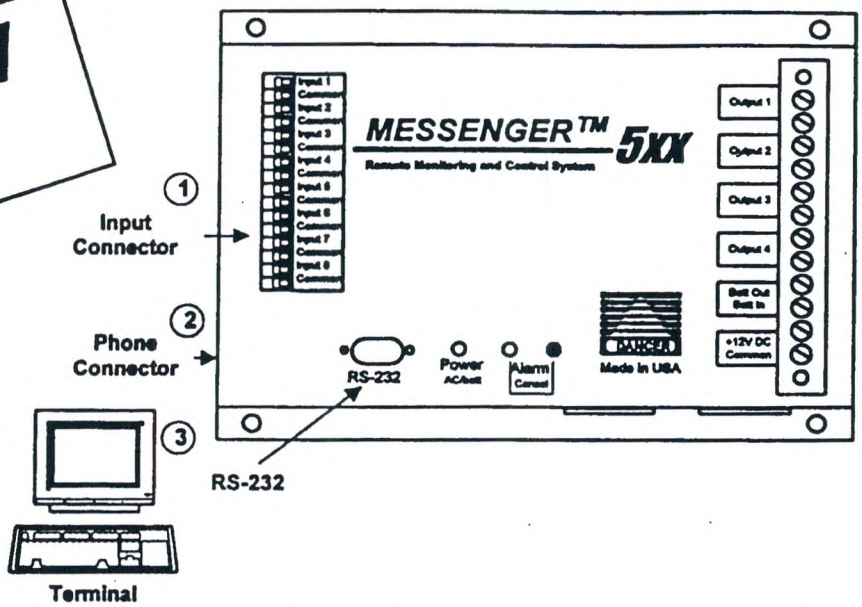

Figure A: Messenger Series 5xx Remote Monitoring, Alarm, and Control System

1 Configuring the Inputs

The inputs are factory configured to accept a 'dry-contact' or thermistor input. To configure an input for a 0-5VDC or 4-20mA sensor type, remove the input connector and set the 'Shunt' and 'Pull-Up' DIP switches as follows:

Sensor Type	Switch Settings
4-20 mA	Shunt = ON, Pull-Up = OFF
0-5 VDC	Shunt = OFF, Pull-Up = OFF
Thermistor	Shunt = OFF, Pull-Up = ON
Dry Contact	Shunt = OFF, Pull-Up = ON

2 Connect to a Phone Line

Plug the supplied telephone cord into the Messenger. Connect the other end into an RJ-11 telephone outlet.

3 Connect to a Local Terminal (optional)

Attach a 9 pin RS-232 cable between the Messenger and the RS-232 serial port on your PC or data terminal. The factory default baud rate for the RS-232 connection is 4800 baud with no parity, 8 data bits and 1 stop bit.

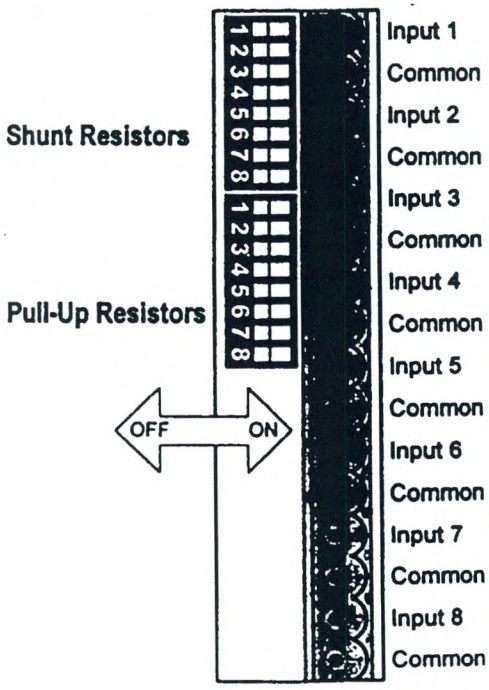

Figure B: Input Connector

MODEL L8 FLOTECT™ LIQUID LEVEL SWITCH

Specifications – Installation and Operating Instructions

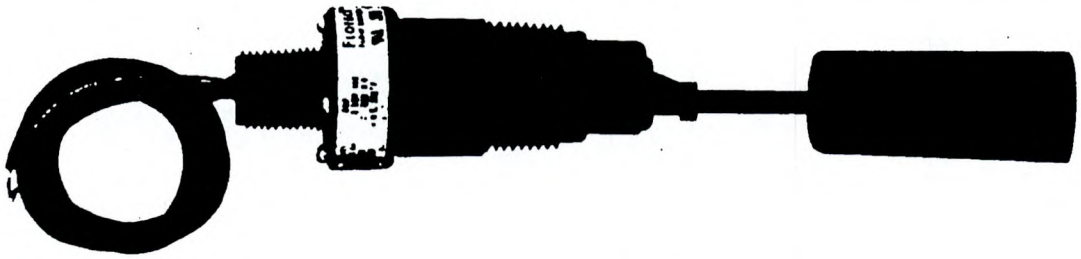

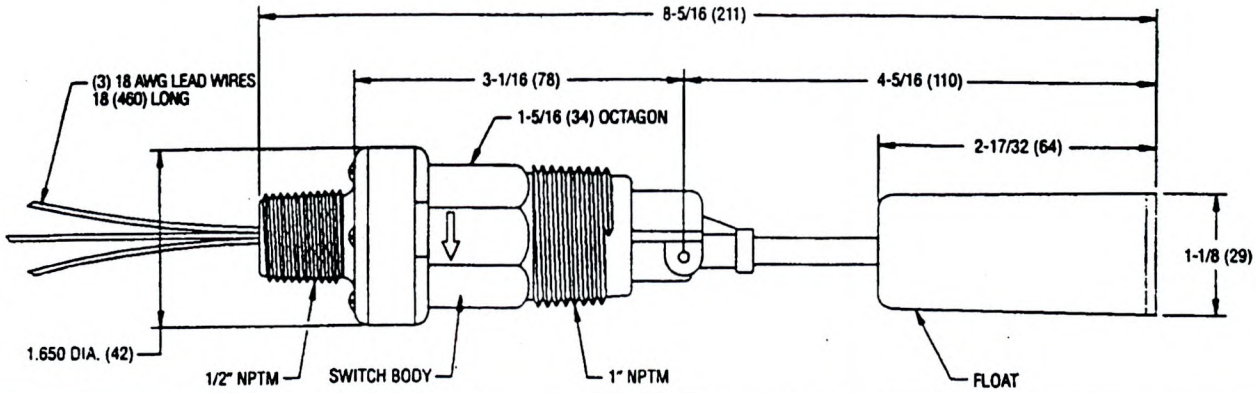

PHYSICAL DATA

Maximum Temperature: 212°F (100°C)

Maximum Pressure: 150 psig (10.3 bar)

Process Connection: 1" NPTM

Switch Type: SPDT snap acting

Electrical Ratings: 5A @ 125/250 VAC. 5A resistive, 3A inductive @ 30 VDC. MV Option (gold contacts for dry circuits) 1A @ 125 VAC. 1A resistive, 0.5A inductive @ 30 VDC.

Wire Leads: 18 AWG × 18 inches (46 cm) length

Overall Length: 8.312 inches (21 cm)

Switch Body and Float: Polyphenylene sulphide (PPS)

Wetted Materials: Polyphenylene sulphide, ceramic 8 magnet, 316 stainless steel pin and spring.

Minimum Specific Gravity: 0.6

Weight: 5 ounces (142 grams)

INSTALLATION

1. The Model L8 Level Switch is designed for use in clean, compatible process media free from scale, debris and other foreign material which could collect on float and impede its movement. Build up from such materials will prevent proper operation. See wetted materials above to assure compatability with process liquids.

2. Unpack switch and remove any packing material from the switch and float. Due to variations in fittings and amount of thread engagement, float must be checked for proper operation during installation.

3. Use Teflon® thread tape or other suitable pipe joint compound to seal the 1" NPT mounting connection. Avoid excess sealant which could interfere with float movement. Do not exceed 50 ft/lbs. (40 n/m) torque on the switch housing. Damage can result.

4. Install switch in a horizontal position with index arrow pointing down.

5. Wire in accordance with local electrical codes. Lead wire color codes are as follows. Black – Common, Red – Normally Closed, Blue – Normally Open. Normal is the contact condition when liquid level is below the actuation point. Closed contacts open and open contacts close when liquid level lifts the float to the actuation point.

6. Switch electrical components must be protected from moisture at all times. If necessary, install a lightweight, waterproof junction box over the 1/2" NPT threaded stem. Do not place mechanical loading on the switch housing. Permanent damage can occur. Use flexible Romex sheathing or equivalent.

©Copyright 1995 Dwyer Instruments, Inc.

Printed in U.S.A. 11/95

FR 82-440881-00

W.E. ANDERSON DIVISION, DWYER INSTRUMENTS, INC.

Telephone 219/879-8000

Electrical Output Registers

For Multi-jet or Turbine Meters

Electrical Output Register With Single Output

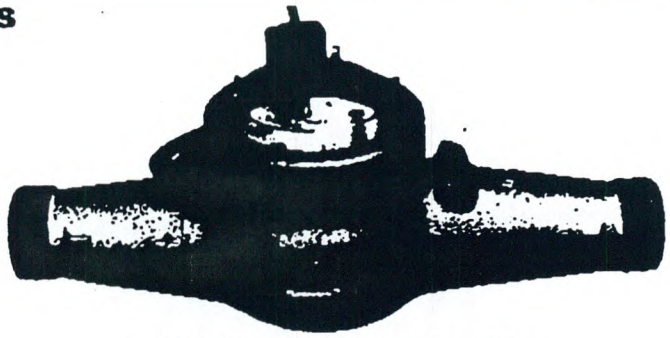

Multi-jet Meter with Electrical Output Register

TECHNICAL SPECIFICATIONS

Description	Registers compatible with Master Meter 5/8" to 2" Multi-jet Cold or Hot Water Meters and 2" to 12" Turbine Meters providing single or double contact closure corresponding to defined volume increments.
Applications	In utility, industrial and agricultural installations where: • Totalization is required at a site remote from the meter; • Precise volume input to batching equipment is required, for injection of chemicals, dyes or other additives.
Switch Type	Reed Switch Type Proximity Sensor. Dry contact switch.
Construction	Permanently sealed, magnetic drive register, with stainless steel register base, plastic lens and wrap-around gasket. A standard six-wheel mechanical odometer accommodates on-site reading when required.
Single Switch Output	Switch is enclosed in a vacuum-sealed glass tube. The switch assembly locks, with a bayonet fit, into a sealed cavity in the register.
Dual Switch Output	Switches are enclosed in a vacuum-sealed glass tube and permanently epoxy sealed in the register lens.
Output	Quantity of water per switch closure varies with meter size. Output options include 1, 10 and 100 percent of register sweep, specified on order. Output options by meter size and registration are summarized on the reverse side of this bulletin.
Compatible Equipment	From Master Meter: LCD Remote Counter and Batching Unit. Other Equipment: Electrical/electronic counters, totalizers, actuators, injection equipment and proportional feed pumps.
Wiring Distances	Reed switch assembly is factory sealed to 3 feet of 24 gauge, 2-conductor stranded cable. Remote counting or batching equipment can be installed up to 500 feet from the meter, connected by 24 gauge, 2-conductor stranded cable.
Electrical Specifications	
Maximum Switched Current	500 mA
Maximum Recommended Switching Voltage	32 Volts (AC or DC) WARNING: We recommended contacts be kept within the stated parameters.
Contact Resistance	70 mOhms
Power Requirements	Electrical output register consumes no power, making it suitable for use with low current, dry battery powered devices.
Warranty	Electrical Output registers are warranted for one year from shipment date.

MASTER METER

Meter Operating Characteristics and Dimensions

Characteristics/Dimension	1-1/2" Threaded Ends	1-1/2" Flanged Ends	2" Threaded Ends	2" Flanged Ends
Flow Rating (gpm)	100	100	160	160
Continuous Flow (gpm)	75	75	120	120
Normal Flow Range (gpm)	5 – 100	5 – 100	8 – 160	8 – 160
Low Flow (gpm)	1½	1½	2	2
Maximum Working Pressure (psi)	150	150	150	150
Maximum Working Temperature (degrees F)	120°	120°	120°	120°
Length	12-5/8"	13"	15-1/4"	17"
Height (standard register with lid)	6-3/4"	6-3/4"	7-5/8"	7-5/8"
Height (DIALOG register)	7-1/2"	7-1/2"	8-3/8"	8-3/8"
Width	5-3/8"	5-3/8"	5-3/4"	5-3/4"
Weight (lbs.)	11	12	20	24
Carton Weight (lbs.)	12	14	22	26

Head Loss Curves

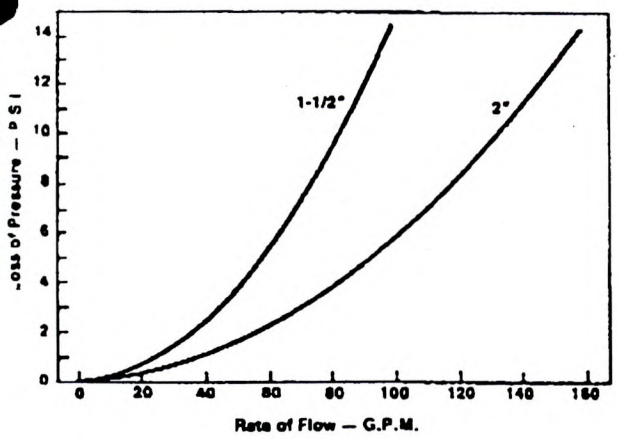

Accuracy Curve

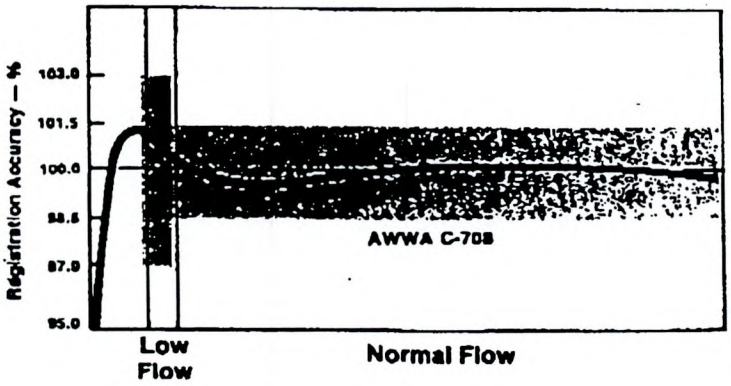

Distributed by:

1001 McKESSON DRIVE
LONGVIEW, TEXAS 75604

JEM Enterprises
228 Spring Avenue
Troy, New York 12180
Tel: 518-273-9048 Fax: 270-0014

MASTER METER

Register Output Options by Meter Type, Size and Registration

Usage in Gallons

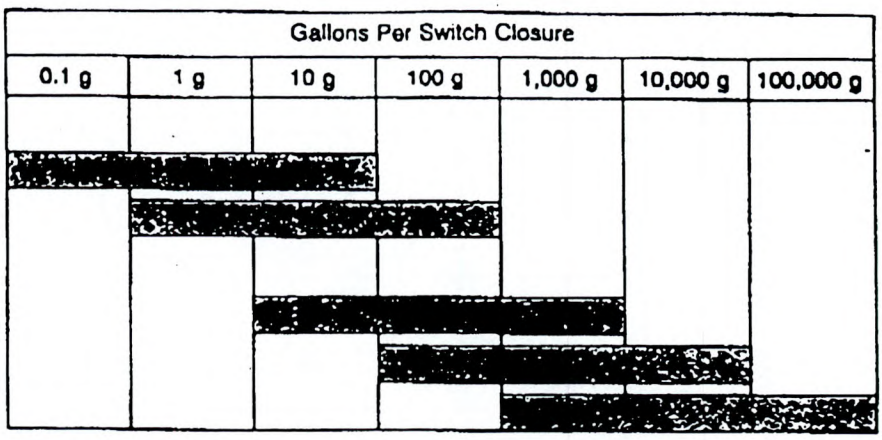

Usage in Cubic Feet

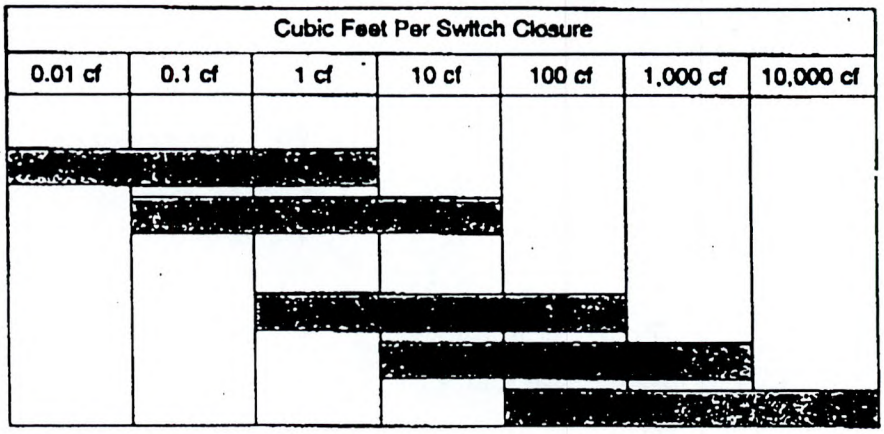

Compound Meter Outputs

Output From Both High and Low Flow

Size	High Flow Turbine	Low Flow Multi-jet
2"	2"	5/8"
3"	3"	5/8"
4"	4"	1"
6"	6"	1-1/2"

Dual Output Register Configuration

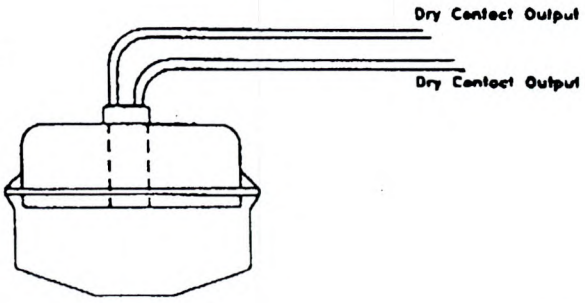

MASTER METER

Distributed by:

JEM Enterprises
228 Spring Avenue
Troy, New York 12180
Tel: 518-273-8048 Fax: 270-0014

Master Meter reserves the right to make modifications to the product described herein at any time and without notice.
© Copyright Master Meter, Inc. All rights reserved.

5990

APPENDIX B
SAMPLE SEMI-ANNUAL O&M REPORT OF GROUNDWATER TREATMENT SYSTEM

SEMI-ANNUAL O&M REPORT
REMEDIAL WORK ELEMENTS I, II AND IV

Reporting period December 22, 2000, through June 22, 2001

Malta Rocket Fuel Area Site
Malta, New York

Prepared for:

General Electric Company
Corporate Environmental Programs
320 Great Oaks Boulevard, Suite 323
Albany, New York 12203

July 27, 2001

M:/188reps/MRFA/O&M_0701

CERTIFICATION: This document has been reviewed and is prepared in accordance with the contract documents.

Grant V. Anderson
Project Manager

Brian Neumann, CPG
Project Hydrogeologist

TABLE OF CONTENTS:

1.0 INTRODUCTION 1

2.0 O&M OF REMEDIAL WORK ELEMENT I (DRINKING WATER) 2

2.1 REMOTE TELEMETRY/PROGRAMMABLE LOGIC CONTROLLER 3
2.2 VISUAL INSPECTION 4
2.2.1 System Inspection 4
2.2.2 Recovery Pump Inspection 4
2.2.3 100,000 Gallon Reservoir Inspection 5
2.2.4 Air Stripper Tower Inspection 6
2.2.5 Settling Tank Inspection 6
2.3 OPERATING MEASUREMENTS 6
2.3.1 Water Flow Measurements 6
2.3.2 Blower Air Pressure 7
2.4 WATER QUALITY DATA 7

3.0 O&M OF REMEDIAL WORK ELEMENT II (GROUNDWATER) 9

3.1 SAMPLE COLLECTION 9
3.2 CHROMIUM ANALYTICAL RESULTS 10
3.3 VOLATILE ANALYTICAL RESULTS 10
3.4 COMPARISON OF OBSERVED VOC CONCENTRATIONS TO SIMULATION RESULTS 11

4.0 INSTITUTIONAL CONTROLS 12

5.0 SUMMARY 13

5.1 DRINKING WATER 13
5.2 GROUNDWATER 13

Tables:

1. Maintenance Checklist
2. Equipment Log
3. Process Operating Report
4. Summary of Sampling Program, Preservatives, Holding Times and Containers
5. Water Quality Analytical Results
6. Summary of Water Quality Analytical Results, Wells DGC-3S, DGC-4S and 13S
7. Summary of Water Quality Analytical Results, Wells M-27, M-27D, M-33S and M-33I
8. Summary of Water Quality Analytical Results, Surface Water

Figures:

1. Site Location Map
2. Well 13S Hexavalent Chromium Concentrations
3. Well M-27D Carbon Tetrachloride Concentrations

4. Simulated Versus Observed Carbon Tetrachloride Concentrations (May 2001) at Well M-27D
5. Simulated Versus Observed Trichloroethylene Concentrations (May 2001) at Well M-33S
6. Simulated Versus Observed Trichloroethylene Concentrations (May 2001) at Well M-33I

Appendices:

Appendix A Influent/Effluent Water Quality Data - February 28, 2001
Appendix B Influent/Effluent Water Quality Data - May 15, 2001
Appendix C Data Validation Report
Appendix D Influent/Effluent/Reservoir Water Quality Data (EPA 8260 quick turn analysis) - February 28, 2001 with General Electric Correspondence to USEPA
Appendix E Air Stripper Flow Data

1.0 INTRODUCTION

This operations and maintenance (O&M) report documents on going O&M activities conducted at the Malta Rocket Fuel Area (MRFA) site, in the town of Malta, New York. This report has been prepared in accordance with the following documents:

- Operation and Maintenance Manual, Remedial Work Element I, Drinking Water, dated March 31, 1998 and prepared by ERM - Northeast, Inc.
- Operations and Maintenance Manual, Remedial Work Element II, Groundwater, dated December 11, 1997 and prepared by ERM - Northeast, Inc.
- Operation and Maintenance Manual, Remedial Work Element IV, Institutional Controls, dated September 9, 1999, revised September 27, 1999, prepared by IT Corporation, Inc.

This report covers all site activities performed at the site as required in each of the previously referenced documents, for the period from December 22, 2000 through June 22, 2001.

2.0 O&M OF REMEDIAL WORK ELEMENT I (Drinking Water)

Six monthly site visits were performed to check system operation, record system operating conditions, and to determine system treatment effectiveness by sampling of the drinking water process stream. These visits took place on January 31, February 28, March 8, April 30, May 15 and June 22, 2001. An additional visit was performed on May 25, 2001 as part of Work Element I to complete tasks associated with annual system maintenance.

System effectiveness sampling was performed during the February 28 and May 15 site visits to document adherence to treatment system discharge objectives. Analytical results from these sample events (including validated analytical results and chain of custody forms for the February 28 and May 15, 2001 samples), are provided in **Appendix A** and **Appendix B**, respectively. The validation summary for samples is included in **Appendix C**.

Based on the information gathered during this reporting period, it is evident that the ground water treatment system is operating as intended and is meeting the performance standards for the MRFA site. Both RW-1D and RW-2D have operated at an instantaneous flow rate of approximately 6 to 6.5 gallons per minute (gpm) each. This yields an instantaneous system flow of approximately 12 to 13 gpm. System design capacity is a maximum of 25 gpm.

System alarm conditions were received on two occasions from the system Remote Telemetry Unit (RTU) during the current reporting period. The first alarm was received on February 11, 2001 and indicated a high back pressure condition existed in the air stripper tower. Historic field measurements of the air stripper blower air flow have indicated adequate air flow through the tower packing despite high backpressure readings. It is believed the increased back pressure is probably attributable to partial icing of the tower packing in the upper section of the tower during periods of sub-freezing weather. Based upon water quality data from samples collected while the back pressure readings were elevated, there was no effect on the performance of the air stripper in removing volatile organic compounds (VOCs) from the process stream. Therefore, no action was taken for this alarm and system operation continued.

A second alarm was received on February 19, 2001 indicating a low blower pressure in the air stripper tower. IT Corporation erroneously believed this alarm to be an additional high backpressure situation and action was delayed until the regularly scheduled O&M visit for February.

IT Corporation personnel contacted the Malta Test Station on February 26, 2001 to notify them of the upcoming O&M visit on February 28, 2001. Test Station personnel advised IT Corporation that the treatment system had in fact been down for an indeterminate period of time. Subsequent to this conversation, the RTU was accessed remotely by IT personnel via a software link. It is believed that IT personnel then inadvertently disabled the low pressure alarm while reviewing system configurations, allowing the pumping system to restart without the operation of the air stripper blower. System operation continued periodically through February 28, 2001 without the operation of the blower unit. Approximately 14,080 gallons of water were processed through the treatment system without operation of the air stripper blower. When IT personnel inspected the system on February 28, 2001, a blown fuse was found on the air stripper blower. This fuse was replaced and the system was returned to normal service. The facility personnel were notified of this situation and they indicated that the water supply was not used for drinking by anyone at the test station. Complete details are provided in the correspondence included in **Appendix D**.

In addition to the normal water samples collected during the February 2001 site visit, influent, effluent and reservoir water samples were also analyzed per USEPA Method 8260 for quick turnaround, to insure drinking water standards were not being exceeded in the reservoir, and to assess current influent and effluent concentrations. The results of the analysis showed both effluent and reservoir samples below method detection limits for all analytes. Influent VOC concentrations were consistent with historical analysis of the extracted groundwater. Analytical results for the quick turn samples have been included in **Appendix D**.

All system interlocks were thoroughly checked during the March 8, 2001 O&M visit to insure all interlocks and alarms were functioning normally.

Air stripper blower pressure readings as well as effluent water quality indicate that the air stripper packing material is not in need of cleaning or replacement.

2.1 Remote Telemetry/Programmable Logic Controller

The RTU has successfully notified key personnel via facsimile and voice messaging of alarm conditions (high back pressure and low stripper pressure as previously discussed) during the current period. It is believed that the problems experienced in February 2001 were a result of operator error in configuring the alarm parameters. IT Corporation has had the RTU manufacturer (Dancer Communications) connect to the RTU remotely and confirm that all unit parameters are configured for proper system operation. All other system equipment is in good

repair and should continue to be inspected and repaired in accordance with the schedule provided in **Table 1**. Corrective action taken to avoid future configuration errors through remote access are discussed in **Section 2.2.1**.

2.2 Visual Inspection

2.2.1 System Inspection

Visual inspections were made of all accessible system components during monthly site visits in accordance with attached **Table 1**, *Maintenance Checklist.* Inspections were performed to check for signs of component wear, process piping leaks and general system integrity.

The system was found to be in good working order with the exception of operational problems experienced in late February 2001, as previously detailed. Corrective actions, including evaluation of additional interlocks for the treatment system and elimination of remotely adjusting system operating parameters through the RTU have been initiated. These actions will prevent future occurrences of recovery pumps operating without the blower functioning.

Maintenance activities included regular inspection of the air stripper blower intake for obstructions, inspection of all process valves and piping to prevent leakage of untreated groundwater, and inspection of the air stripper sight tube for sediment buildup. In addition, the settling tank sump exterior was cleaned monthly, and operation of the transfer sump pump and associated high level float was checked. The settling tank interior was also visually inspected for signs of sediment buildup or corrosion.

2.2.2 Recovery Pump Inspection

Recovery pumps were inspected during the May 25, 2001 site visit. IT Corporation personnel utilized confined space entry procedures to enter well vaults for RW-1D and RW-2D and disconnect pump supply piping. All system piping and electrical power supplies were locked and tagged out during maintenance/inspection activities. A mechanical hoist was utilized to extract the pump and associated down well pipe from the well casing. Each pump and its discharge piping was inspected for corrosion, loose or damaged parts and other signs of wear or damage that would indicate a potential for failure.

The pump in RW-1D is encased in a four inch diameter polyvinyl chloride (PVC) section of slotted well screen. After removal of this protective casing, the pump was inspected and found to be free of defects. A light coat of mineral scale had accumulated on the pump motor, likely the result of moderate heat buildup during pump operation. There was no buildup of any kind

around the pump intake screen. The pump was subsequently wiped down, the protective casing was reinstalled and the pump was reinstalled without modifications or changes to the system piping. This pump is currently installed with the pump intake at a depth of 53.50 feet below the top of casing. After reinstallation, the pump was restarted and the pump piping was inspected for leaks in the well vault - none were observed.

The recovery pump in RW-2D was also removed and inspected in the same manner as the RW-1D pump. This pump does not have a protective casing installed on the pump body. A light buildup of biological type growth was observed on the pump intake. Distilled water was utilized to flush the intake screen and remove any of the accumulated material. No other problems were observed with this recovery pump and the pump was subsequently reinstalled without incident. This pump is currently installed with the pump intake at a depth of 69.00 feet below the top of casing. After reinstallation, the pump was restarted and the pump piping was inspected for leaks in the well vault - none were observed. It was noted that the well casing for RW-2D is continuing to deteriorate (rust) near ground level. Small rusted pieces of the inner casing wall were observed to be sloughing off and falling into the well during activities associated with pump removal and redeployment. This deterioration should not interfere with system operation in the immediate future, however future repairs may be necessary.

2.2.3 100,000 Gallon Reservoir Inspection

The annual inspection of the 100,000 gallon reservoir was performed on May 25, 2001. One three inch centrifugal pump was utilized to reduce the level of water in the site reservoir to allow IT Corporation personnel access to the reservoir interior. A dedicated suction hose was utilized to avoid contamination of the potable water supply. The reservoir level was reduced by approximately five feet before IT Corporation personnel entered the interior of the structure. All confined space entry procedures, including air monitoring and the use of retrieval equipment, were followed for the duration of the reservoir inspection.

The visual inspection of the reservoir did not reveal any observed problems. A hand held one million candlepower spotlight was utilized to assist personnel in the inspection of the reservoir. The reservoir ceiling, sidewalls and floor appear to be in good condition. There were no signs of cracks in the concrete or any types of buildup or growth from biological activity. The standpipe which feeds the reservoir appeared rusty but otherwise in sound condition.

2.2.4 Air Stripper Tower Inspection

IT Corporation utilized a boom lift bucket truck to access the top section of the air stripper tower on May 25, 2001. The protective cover was removed to allow access to the tower demister and spray nozzle. The demister pad appeared to be in good condition with no buildup of any material. The spray nozzle also appeared to be in good condition and did not require cleaning beyond a simple wipe down. The air stripper tower packing was also inspected at the top of the column and found to be in good condition. Packing was discolored but no evidence of clogging or significant mineral buildup was observed.

Visual observations of the air stripper tower packing, along with the documented efficiency of the air stripper tower, indicate the current packing is working properly and does not require change out at this time. Air stripper efficiency and packing condition will continue to be monitored regularly to anticipate future maintenance actions.

2.2.5 Settling Tank Inspection

The air stripper effluent settling tank was inspected during the annual maintenance visit on May 25, 2001. A wet/dry vacuum was utilized to remove accumulated fine sands from the bottom of the tank during the annual inspection performed the previous year in March 2000. There was minimal buildup of fine sands since the previous cleaning and subsequently no intrusive work was performed in the settling tank during the current period. No signs of corrosion or pitting in the tanks interior was noted. Operation of the settling tank transfer pump and high level float was checked and found to be in working order. No problems were observed with any component of the settling tank assembly.

2.3 Operating Measurements

2.3.1 Water Flow Measurements

Water flow measurements for wells RW-1D and RW-2D have been tabulated and are shown in **Table 3**, *Process Operating Report* for the reporting period. These readings indicate that the average water flow rates for the period from December 22, 2000 to June 22, 2001 are as follows:

Well RW-1D:	0.353 gpm
Well RW-2D:	0.370 gpm
System Avg:	0.723 gpm

Average daily water flow as recorded by the data logger are provided in **Appendix E**. This

information provides more detailed influent water flow data than that reported in **Table 3**. Information obtained from the data logger indicates an average daily water flow rate of 0.726 gpm for the current reporting period. This is an increase from the average rate of 0.587 gpm for the reporting period ending December 21, 2000.

2.3.2 Blower Air Pressure

Measurements of the air stripper blower back pressure were recorded during monthly O&M site visits. Readings from the pressure gauge installed to monitor the air stripper back pressure are provided in **Table 3**. Pressure readings ranged from 3.2 to 3.8 inches of water column during the current period. As previously mentioned, elevated pressure readings were observed during February. It is believed that icing of the upper portion of the air stripper tower was responsible for the elevated readings. No effect on air stripper performance was noted as a result of the observed condition. Pressure readings will continue to be monitored for trends indicating tower packing fouling and the associated potential loss of efficiency for the treatment system.

2.4 Water Quality Data

Samples of the drinking water system influent and effluent were collected on February 28 and May 15, 2001. All samples were collected by IT Corporation personnel and directed to Columbia Analytical Laboratories, Incorporated in Rochester, New York for analysis. All samples were analyzed for volatile organic compounds (VOCs) using USEPA Method Contract Laboratory Program (CLP) OLC-02, modified to include hexachlorobutadiene, 1,2,3 trichlorobenzene and trichlorofluoromethane as summarized in **Table 4**. The validated analytical results and chain of custody forms for the February 28 and May 15, 2001 samples are provided in **Appendix A** and **Appendix B**, respectively. All validation was performed by Data Validation Services, Incorporated of North Creek, New York. Validation reports are included in **Appendix C**.

Carbon tetrachloride (Carbon Tet) and trichloroethene (TCE) concentrations are tracked to document treatment system effectiveness. Values for all analyzed compounds including Carbon Tet and TCE were reduced to below drinking water standards for all effluent samples.

Analyte	Date Sampled	Influent (ppb)	Effluent (ppb)	Performance Standard (ppb)
Carbon Tet	February 28, 2001	20.4	<1.0	5
	May 15, 2001	15.8	<1.0	5
TCE	February 28, 2001	17.2	<1.0	5
	May 15, 2001	13.1	<1.0	5

Effluent sampling results indicated that Carbon Tet and TCE were below detection limits for both monitoring events. Historical influent concentrations for Carbon Tet range from 12 ppb in October 1996 to 149 ppb in December 1990. Effluent concentrations range from below method detection limits to 4.0 ppb in April 1990. Historical influent concentrations for TCE vary from 16 ppb in April 1997 to 83 ppb in June 1992. Effluent concentrations have been observed from below method detection limits to 2.8 ppb in March 1987.

Chloroform was detected at a concentration of 2.8 ppb in the air stripper influent sample collected on February 28, 2001. Chloroform was also detected in the air stripper influent sample collected on May 15, 2001 at a concentration of 1.7 ppb. Chloroform was below detection limits in the effluent samples collected on both dates.

Effluent concentrations for VOCs indicate that the treated water meets the performance standards established for the site for use as a potable water supply.

3.0 O&M OF REMEDIAL WORK ELEMENT II (Groundwater)

3.1 Sample Collection

In accordance with the Operations and Maintenance Manual for Remedial Work Element II - Ground Water (O&M-GW) approved by the USEPA, groundwater samples were obtained and analyzed from wells DGC-3S, DGC-4S, 13S, M-27S, M-27D, M-33S, and M-33I. Surface water samples were obtained and analyzed from locations SW-A, SW-B, and SW-D (**Figure 1**). One trip blank and one blind duplicate sample (DUPA) from well M-27S were also obtained and analyzed.

Unfiltered samples were collected on May 15, 2001 and submitted to Columbia Analytical Services, Inc. in Rochester, New York. Samples from all monitoring wells (with the exception of 13S) and all surface water locations were analyzed for volatile organic compounds (VOCs) by USEPA Method OLC-02. Samples from wells 13S, M-27S, and M-27D, and surface water location SW-B were analyzed for unfiltered total matrix chromium following CLP procedures and unfiltered hexavalent chromium by SW-846 Method 7196 (Test Methods for Evaluating Solid Waste, 3rd Edition, November 1986).

Results of the May 2001 semi-annual sampling are summarized in **Table 5**. The laboratory reporting data sheets and a data validation report for this sampling event are also attached (**Appendix C**). A summary of analytical results from 1987 through the most recent round is provided in **Tables 6**, **7**, and **8** for sampling points presently included in the EWMS sampling program. The Sampling and Analysis Plan (SAP) as presented in the O&M-GW contains a complete table of historical EWMS analytical results through 1994.

Time-concentration plots for hexavalent chromium at well 13S (**Figure 2**) and carbon tetrachloride at well M-27D (**Figure 3**) are also included. Based on the May 2001 analytical results, the groundwater from this site does not appear to be impacting the Luther Forest Well Field or the water supply wells north of the Site.

3.2 Chromium Analytical Results

Results of the unfiltered total chromium analyses are as follows: well 13S contained 136 μg/l. For comparison purposes only, the New York State Ground Water Standard (NYSGWS) for total chromium is 50 μg/l.

The unfiltered hexavalent chromium analytical results were also "ND" at the detection limit of 10 μg/l for all groundwater samples and one surface water sample except well 13S which contained 12.3 μg/l. For comparison purposes only, the NYSGWS for hexavalent chromium is 50 μg/l.

The attached time-concentration plot for unfiltered hexavalent chromium in well 13S (**Figure 2**) indicates a significant decrease in the concentrations of hexavalent chromium after August 1993. Between November 1994 and May 1999, the hexavalent chromium concentrations in well 13S have been at or slightly above the NYSGWS. The past two semi-annual sampling event results have shown decreases and have been lower than the NYSGWS.

Neither total chromium nor unfiltered hexavalent chromium were detected in surface water location SW-B during this reporting period.

3.3 Volatile Analytical Results

Carbon tetrachloride was detected in well M-27D at 13.8 μg/l. The federal drinking water standard for carbon tetrachloride is 5 μg/l. The attached time-concentration plot for carbon tetrachloride in well M-27D (**Figure 3**) demonstrates that the May 2001 concentration remains relatively low and is decreasing with time. Chloroform was detected in well M-27D at 1.1 μg/l. The NYSGWS for chloroform is 7 μg/l. Trichloroethylene was detected in well M-27D at 19.4 μg/l. Trichlorofluoromethane was detected in well M-27D at 2.0 μg/l. For all the remaining monitoring wells, acetone was the only VOC detected. The third party validation identified the acetone detections as estimated based on low relative response factors in the laboratory calibration standards.

With the exception of acetone, no VOCs were detected in surface water samples SW-A, SW-B and SW-D collected and analyzed during the May 2001 sampling event. The third party validation identified the acetone detections as estimated based on low relative response factors in the laboratory calibration standards.

3.4 Comparison of Observed VOC Concentrations to Simulation Results

As described in the O&M-GW report, the carbon tetrachloride and trichloroethylene concentrations observed during the semi-annual monitoring are to be compared to the results from the contaminant fate and transport modeling reported in Appendix A of the O&M-GW. This comparison was performed for carbon tetrachloride in monitoring well M-27D (**Figure 4**) and for trichloroethylene in monitoring well M-33S (**Figure 5**) during the May 2001 sampling event. The starting point for the simulation reported in the O&M-GW report was the carbon tetrachloride spatial distribution as measured in June 1992. As shown in **Figure 4**, the simulated carbon tetrachloride results are much higher than the observed concentrations. As shown in **Figures 5** and **6**, there were no observed concentrations of TCE in monitoring wells M-33S and M-33I as predicted by the simulations.

4.0 INSTITUTIONAL CONTROLS

O & M activities, for remedial Work Element IV, Institutional Controls, are conducted on an annual basis. IT Corporation conducts these activities, visual inspection and environmental easement restriction interviews during the second semi-annual reporting period. No Institutional control activities were conducted during the first semi-annual (December 2000 through June 2001) event. These activities will be conducted and reported during the next event.

5.0 SUMMARY

5.1 Drinking Water

The ground water treatment system is operating as intended and is meeting the performance standards for the MRFA site. All effluent samples collected and analyzed during the current period revealed concentrations below project discharge objectives. Treatment equipment continues to operate satisfactorily, with the only maintenance required being typical of components in use at the facility. It is believed that all problems have been addressed with the treatment system RTU. System equipment will continue to be monitored as necessary to ensure continued operation of all components and to maintain a reliable source of potable water for the Test Station.

5.2 Groundwater

In summary, only well M-27D had detectable concentrations of carbon tetrachloride above federal drinking water standards. Chromium was detected at a concentration of 136 μg/l, and hexavalent chromium was detected at a concentration of 12.3 μg/l in well 13S. Carbon tetrachloride was not detected in the monitoring wells adjacent to the Luther Forest Well Field. Based on the current analytical results, the ground water from the MRFA Site does not appear to be impacting the Luther Forest Well Field or the water supply wells north of the site.

Comparison of the observed carbon tetrachloride concentrations to simulated carbon tetrachloride concentrations at selected EWMS monitoring well locations shows that the simulated concentrations are higher than the observed concentrations. The simulated TCE concentrations are also higher than the observed TCE concentrations in M-27S and M-27D. TCE was not detected in M-33S or M-33I. Future comparisons will continue to help assess the natural attenuation and degradation of VOCs in ground water at the MRFA Site.

APPENDIX C
O&M MANUAL FOR AIR STRIPPER

Oil Recovery Systems inc.
greenville, new hampshire 03048
telephone (603) 878-2500

AIR STRIPPING
OPERATION & MAINTENANCE
MANUAL

Oil Recovery Systems, Inc.
Mill Street
Greenville, New Hampshire 03048
Telephone (603) 878-2500

INTRODUCTION

AIR STRIPPING SYSTEM

The Logical Choice for VOC Removal

Air Stripping is a technique for the effective removal of volatile organic compounds which are either dispersed or dissolved in water. The water is fed over a large surface area, maximizing the surface contact, between water and air, thus allowing the contaminants to be stripped from the water.

The ORS Air Stripping system quickly and economically removes volatile organic pollutants from water. Applications include numerous groundwater and wastewaters contaminated by volatile organic compounds.

Air Stripping is accomplished by a packed tower. Packed towers operate by trickling contaminated water downward against an upflow gas stream in a cylindrical column filled with packing that will provide extensive water/air contact area. A blower at the base of the tower forces air up through the falling water. The air and water flow is easily controlled in the tower to optimize the air to water ratio and maximize removal efficiencies. The air stripping system will be operated at an air to water ratio of 10:1 to 20:1 CFM/GPM.

The air stripping system consists of a vertical column containing a unique packing material, air blower, motor and controls. Standard ORS towers feature the highest quality contact molded FRP (Fiberglass reinforced plastic) construction available. All standard towers have a minimum of 1/4" wall thickness, and have a minimum wind load design rating of 100 mph. Where local codes exceed 100 mph, or tower extensions are used, guy wire assemblies are required.

<u>Inherent features of all standard ORS Air Strippers include:</u>

FRP tower shell

Polypropylene Tripacks packing

Packing support

Explosion proof blower motor

Non-sparking aluminum blower wheel

Blower inlet guard

Air flow regulator

Blower flexible duct

Explosion proof On/Off switch

12' cord with ENP plug

Mist eliminator with safety hold downs

Removable site tube assembly

Top accessory flange

Full cone spray nozzle (Orifice type)

Integral sump

Lifting lugs

Concrete anchor bolts (tower and blower)

Sch. 80 PVC influent pipe with sample port

Guy wire and turnbuckle assemblies

Options

Input/Output pumps and hoses

10' & 5' tower extensions

Automatic level controls

Access manways

Overflow port

Winterization kits

Stainless steel, aluminum shell construction

Alternative packing types

Alternative distributor types

Related Services

Pilot studies

Full scale design

Screening for biological fouling

Screening for inorganic fouling

Installation, Startup and Optimization

Removal Efficiencies

Sizes and flow rates presented herein will provide removal efficiencies in excess of 99 percent for the following compounds:

Benzene	Ethylbenzene	1,2 dichloroethylene
Toluene	Trichloroethylene	1,1,1 trichloroethane
Xylene	1,1 dichloroethylene	Tetrachloroethylene
	Chloroform	Napthelene

Removal efficiencies for phenols will be approximately 30 percent. Increased removal efficiencies of approximately 99.5 can be accomplished with a single pass recycle loop. Air Stripping tower effluent water will be discharged to a 8.5' x 5.5' x 3.5' clearwell for recycle or granular activated carbon treatment system to accomplish the maximum effluent discharge limits as defined in the NPDES.

Operation of ORS Air Strippers

ORS Air Stripping Towers require no attention for normal operation. A tower installed consistent with manufacturers recommendations will require only periodic preventative maintenance checks to assure efficient operation.

To initiate the operation of an ORS Air Stripper, simply start the feed water pump and blower. If the blower includes an airflow damper it should be fully open to start the blower. Airflow can be adjusted and set after the blower has reached full operational speed. The Air Stripper blower must be in operation to achieve maximum removal of VOC's from water.

Maintenance of ORS Air Strippers

ORS Air Strippers, like any piece of process equipment, will operate at maximum efficiency only if regular periodic preventative maintenance checks are performed. The following list defines manufacturers suggested maintenance checks:

Stripping Tower:

1. Inspect packing for fouling and discoloration (extensive inorganic or biological fouling can greatly reduce stripper efficiency).

Blower:

1. Check motor and blower wheel bearings; lubricate as necessary.

2. Check electrical functioning of motor (temperature of operation, amp draw, etc.).

GENERAL SPARE PARTS LIST

AIR STRIPPING TOWER

Qty.	Item
2	MDA 15A fuses
2	Gaskets
1 (A,C)	Spray nozzle (Orifice type)
8	1/2" x 13 SS nuts
8	1/2" SS lock washers
8	1/2" SS flat washers
8	1/2" x 2 1/2" SS bolts
4	1/2" galvanized thunderstuds (with flat & lock washers & nuts)
6 (A,B)	1/4" thunderstuds (with flat & lock washers & nuts)
8 (C)	1/4" thunderstuds (with flat & lock washers & nuts)
2 (A,C)	6" worm drive clamps
2 (B)	5" worm drive clamps
1 (A,C)	36" piece of 6" flex pipe
1 (B)	36" piece of 5" flex pipe
1 (D)	Pipe support

LEGEND

(A)	One foot tower
(B)	Two foot tower
(C)	Three foot tower
(D)	A = 2" pipe support
	B = 2 1/2" pipe support
	C = 3 1/2" pipe support

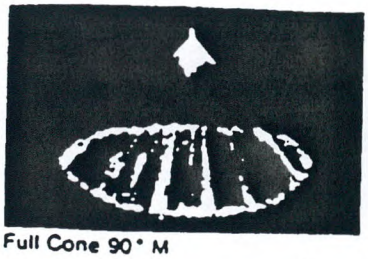

Full Cone 90° M

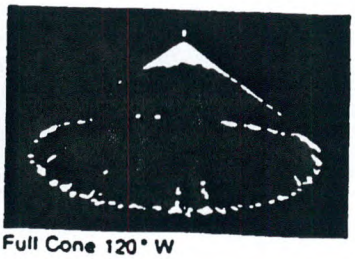

Full Cone 120° W

TYPICAL APPLICATIONS

- Aerating
- Brine spraying
- Chemical processing
- Cooling towers
- Deaerating
- Foam control
- Packed towers
- Quenching
- Scrubbers - air and gas
- Slurry spraying
- Spray absorbers
- Spray ponds
- Steel cooling - hardening
- Washing - coal, gravel and sand
- Water purification

FULL CONE

Spray Angle	Pipe Size	Nozzle Number Male	Nozzle Number Female	Orifice Dia.	Free Passage Dia.	Overall Length	Round Diameter Male	Round Diameter Female	Wt. Oz PVC Male	GALLONS PER MINUTE (GPM) 3	5	7	10	20	40	60	80	100
90°	3/4	NCM0703M	NCF0703M	7/32	9/64	2	1 1/8	1 1/2	1	2.0	2.5	3	3.6	5.1	7.2	8.8	10	12
		NCM0704M	NCF0704M	1/4	5/32	2	1 1/8	1 1/2	1	2.6	3.4	4	5.0	7.0	10	12	14	15
		NCM0707M	NCF0707M	5/16	3/16	2	1 1/8	1 1/2	1	4.6	5.9	7	8.4	12.0	17	20	24	26
	1	NCM1009M	NCF1009M	3/8	7/32	2 3/16	1 3/8	1 3/4	1 1/4	6.0	7.6	9	11.0	15.0	22	26	30	34
		NCM1012M	NCF1012M	7/16	1/4	2 3/16	1 3/8	1 3/4	1 1/4	8.0	10.0	12	15.0	21.0	30	35	40	45
	1 1/4	NCM1214M	NCF1214M	1/2	9/32	3 1/4	1 3/4	2	3 3/4	9.0	12.0	14	17.0	23.5	33	40	47	52
		NCM1217M	NCF1217M	17/32	5/16	3 1/4	1 3/4	2	3 3/4	11.0	14.5	17	20.0	29	40	50	57	64
	1 1/2	NCM1516M	NCF1516M	1/2	9/32	4 1/4	2	2 1/2	6 3/4	10.5	13.5	16	19.2	27	38	47	54	60
		NCM1520M	NCF1520M	9/16	5/16	4 1/4	2	2 1/2	6 3/4	13	17	20	25	35	50	59	68	76
		NCM1524M	NCF1524M	5/8	21/64	4 1/4	2	2 1/2	6 3/4	15	20	24	29	40	55	66	76	85
	2	NCM2017M	NCF2017M	17/32	5/16	5 7/8	2 1/2	3	12 3/4	11	14	17	20	28	40	50	56	64
		NCM2020M	NCF2020M	9/16	21/64	5 7/8	2 1/2	3	12 3/4	13	17	20	25	35	50	59	68	76
		NCM2033M	NCF2033M	11/16	13/32	5 7/8	2 1/2	3	12 3/4	22	28	33	40	57	80	97	111	125
		NCM2040M	NCF2040M	13/16	15/32	5 7/8	2 1/2	3	12 3/4	26	34	40	48	68	95	117	135	151
		NCM2045M	NCF2045M	27/32	1/2	5 7/8	2 1/2	3	12 3/4	29	38	45	55	76	108	132	152	170
		NCM2050M	NCF2050M	29/32	17/32	5 7/8	2 1/2	3	12 3/4	33	42	50	60	84	120	146	170	190
		NCM2060M	NCF2060M	15/16	9/16	5 7/8	2 1/2	3	12 3/4	39	51	60	72	101	143	176	203	227
		NCM2065M	NCF2065M	1	19/32	5 7/8	2 1/2	3	12 3/4	42	55	65	76	110	154	190	220	252
		NCM2070M	NCF2070M	1 1/16	5/8	5 7/8	2 1/2	3	12 3/4	46	59	70	84	118	167	205	236	265
	2 1/2	NCM2570M	NCF2570M	1 1/16	5/8	5 7/8	3	3 1/2	19 1/4	46	59	70	84	118	167	205	236	265
		NCM2580M	NCF2580M	1 1/8	21/32	5 7/8	3	3 1/2	19 3/4	52	68	80	96	135	191	234	270	302
		NCM2590M	NCF2590M	1 3/16	11/16	5 7/8	3	3 1/2	19 3/4	59	76	90	108	152	215	263	304	340
	3	NCM3058M	NCF3058M	1	19/32	5 7/8	3 1/2	4	22 3/4	38	49	58	70	100	140	170	196	219
		NCM3064M	NCF3064M	1 3/16	11/16	5 7/8	3 1/2	4	22 3/4	55	71	84	100	140	200	246	284	318
		NCM3096M	NCF3096M	1 1/4	23/32	5 7/8	3 1/2	4	22 3/4	63	81	96	115	162	230	281	325	363
		NCM30117M	NCF30117M	1 3/8	13/16	5 7/8	3 1/2	4	22 3/4	77	99	117	140	198	280	342	395	442
	4	NCM40125M	NCF40125M	1 3/8	13/16	6	4 1/2	5	46 1/2	82	106	125	150	211	299	366	422	472
		NCM40130M	NCF40130M	1 13/32	27/32	6	4 1/2	5	46 1/2	85	110	130	156	219	310	380	439	490
		NCM40180M	NCF40180M	1 3/4	1	6	4 1/2	5	46 1/2	118	151	180	215	305	428	528	610	680
		NCM40250M	NCF40250M	2	1 3/16	6	4 1/2	5	46 1/2	162	212	250	300	422	597	732	845	945
120°	3/4	NCM0703W	NCF0703W	7/32	9/64	2	1 1/8	1 1/2	1	2.0	2.5	3	3.6	5.1	7.2	8.8	10	12
		NCM0704W	NCF0704W	1/4	5/32	2	1 1/8	1 1/2	1	2.6	3.4	4	5.0	7.0	10	12	14	15
		NCM0707W	NCF0707W	5/16	3/16	2	1 1/8	1 1/2	1	4.6	5.9	7	8.4	12.0	17	20	24	26
	1	NCM1009W	NCF1009W	3/8	7/32	2 3/16	1 3/8	1 3/4	1 1/4	6.0	7.6	9	11.0	15.0	22	26	30	34
		NCM1012W	NCF1012W	7/16	1/4	2 3/16	1 3/8	1 3/4	1 1/4	8.0	10.0	12	15.0	21.0	30	35	40	45
	1 1/4	NCM1214W	NCF1214W	1/2	9/32	3 1/4	1 3/4	2	3 3/4	9.0	12.0	14	17.0	23.5	33	40	47	52
		NCM1217W	NCF1217W	17/32	5/16	3 1/4	1 3/4	2	3 3/4	11.0	14.5	17	20.0	29	40	50	57	64
	1 1/2	NCM1516W	NCF1516W	1/2	9/32	4 1/4	2	2 1/2	6 3/4	10.5	13.5	16	19.2	27	38	47	54	60
		NCM1520W	NCF1520W	9/16	5/16	4 1/4	2	2 1/2	6 3/4	13	17	20	25	35	50	59	68	76
		NCM1524W	NCF1524W	5/8	21/64	4 1/4	2	2 1/2	6 3/4	15	20	24	29	40	55	66	76	85
	2	NCM2017W	NCF2017W	17/32	5/16	5 7/8	2 1/2	3	12 3/4	11	14	17	20	28	40	50	56	64
		NCM2020W	NCF2020W	9/16	21/64	5 7/8	2 1/2	3	12 3/4	13	17	20	25	35	50	59	68	76
		NCM2033W	NCF2033W	11/16	13/32	5 7/8	2 1/2	3	12 3/4	22	28	33	40	57	80	97	111	125
		NCM2040W	NCF2040W	13/16	15/32	5 7/8	2 1/2	3	12 3/4	26	34	40	48	68	95	117	135	151
		NCM2045W	NCF2045W	27/32	1/2	5 7/8	2 1/2	3	12 3/4	29	38	45	55	76	108	132	152	170
		NCM2050W	NCF2050W	29/32	17/32	5 7/8	2 1/2	3	12 3/4	33	42	50	60	84	120	146	170	190
		NCM2060W	NCF2060W	15/16	9/16	5 7/8	2 1/2	3	12 3/4	39	51	60	72	101	143	176	203	227
		NCM2065W	NCF2065W	1	19/32	5 7/8	2 1/2	3	12 3/4	42	55	65	76	110	154	190	220	252
		NCM2070W	NCF2070W	1 1/16	5/8	5 7/8	2 1/2	3	12 3/4	46	59	70	84	118	167	205	236	265
	2 1/2	NCM2570W	NCF2570W	1 1/16	5/8	5 7/8	3	3 1/2	19 1/4	46	59	70	84	118	167	205	236	265
		NCM2580W	NCF2580W	1 1/8	21/32	5 7/8	3	3 1/2	19 3/4	52	68	80	96	135	191	234	270	302
		NCM2590W	NCF2590W	1 3/16	11/16	5 7/8	3	3 1/2	19 3/4	59	76	90	108	152	215	263	304	340
	3	NCM3058W	NCF3058W	1	19/32	5 7/8	3 1/2	4	22 3/4	38	49	58	70	100	140	170	196	219
		NCM3064W	NCF3064W	1 3/16	11/16	5 7/8	3 1/2	4	22 3/4	55	71	84	100	140	200	246	284	318
		NCM3096W	NCF3096W	1 1/4	23/32	5 7/8	3 1/2	4	22 3/4	63	81	96	115	162	230	281	325	363
		NCM30117W	NCF30117W	1 3/8	13/16	5 7/8	3 1/2	4	22 3/4	77	99	117	140	198	280	342	395	442
	4	NCM40125W	NCF40125W	1 3/8	13/16	6	4 1/2	5	46 1/2	82	106	125	150	211	299	366	422	472
		NCM40130W	NCF40130W	1 13/32	27/32	6	4 1/2	5	46 1/2	85	110	130	156	219	310	380	439	490
		NCM40180W	NCF40180W	1 3/4	1	6	4 1/2	5	46 1/2	118	151	180	215	305	428	528	610	680
		NCM40250W	NCF40250W	2	1 3/16	6	4 1/2	5	46 1/2	162	212	250	300	422	597	732	845	945

TO ORDER: Specify Spray Angle, Pipe Size, Nozzle Number and Material

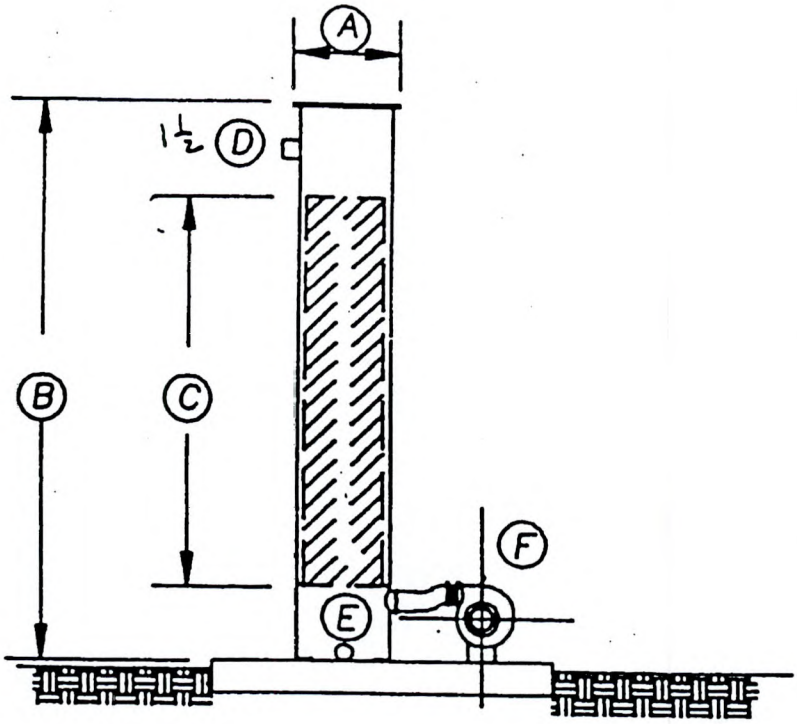

TABLE 1

STANDARD AIR STRIPPERS

TYPE	DIMENSION IN FEET			NPT	PIPE SIZE	HP	DESIGN FLOW, gpm
	A	B	C	D	E		
1 ft	1	17	14	1 1/2"	3"	1	3 – 25
2 ft	2	12.5	10	2"	3"	1	15 – 60
3 ft	3	15	10	3"	4"	1	30 – 175
4 ft	4	17	10	4"	6"	5	80 – 400

NOTE: THERE IS SOME LATITUDE IN FLOW RATES DEPENDING UPON SPECIFIC APPLICATIONS.

APPENDIX D
QUALITY ASSURANCE PROJECT PLAN

APPENDIX D

QUALITY ASSURANCE PROJECT PLAN

6.0 QUALITY ASSURANCE PROJECT PLAN

6.1 INTRODUCTION

Quality assurance and quality control (QA/QC) measures have been established, and a program to ensure that these measures are applied to the collection and interpretation of all environmental monitoring data at the MRFA site. The Quality Assurance Project Plan (QAPP) is designed to assure that the precision, accuracy, representativeness, comparability, and completeness (the "PARCC" parameters) of the collected data are known, documented, and adequate to satisfy the data quality objectives of the study (Section 3.0).

This plan represents the policies, organization, objectives, data-collection activities, and QA/QC activities that will be utilized to ensure that all data collected during this study are representative of site conditions. Laboratory QA/QC procedures, which will be adhered to by the laboratory, are included in their Quality Assurance Project Plans (Appendix E) and in the United States Environmental Protection Agency (USEPA) Contract Laboratory Program (CLP) Statement of Work (SOW) for organic and inorganic analysis (March 1990). These documents are referenced throughout the QAPP, where appropriate. A QA/QC Short Form for the RI is included in Appendix F.

6.2 DATA COLLECTION

6.2.1 Monitoring Parameters, Sample Matrices, and Frequency of Collection

The FSAP (Section 5.0) describes sample collection, the type and number of samples to be collected and the analytical parameters to be analyzed for each sample.

A list of the Sample Matrices and Analytical Requirements is found in Table 7. The table describes the sample matrices, analytical parameters and methodology, total number

of samples to be collected, total number of field duplicates and field blanks and associated laboratory QA/QC requirements. Sampling procedures are provided in the FSAP (Section 5.0).

6.2.2 Laboratory Calibration Procedures

Calibration procedures for laboratory equipment used in the analysis of environmental samples will be performed in accordance with those specified in the USEPA CLP SOW and the laboratory QAPP (Appendix E).

6.3 QUALITY ASSURANCE OBJECTIVES

The overall QA objective is to develop and implement procedures for field sampling, chain-of-custody, laboratory analysis, and reporting that will provide environmental monitoring data of known and acceptable quality. The data must be of sufficient quality for use in comparison with ARARs, risk assessment, feasibility study, and final decision making. The purpose of this section is to address the data quality objectives in terms of accuracy, precision, quantitation limits, representativeness, comparability, and completeness. Specific procedures to be used for sampling, chain-of-custody, calibration of field instruments, laboratory analysis, reporting, internal quality control, audits, preventative maintenance, and corrective actions are described in later sections of this QAPP.

6.3.1 Accuracy

Accuracy is the relationship of the reported data to the "true" value. The accuracy of the methods used for ground-water, surface-water, sediment, and soil samples will be determined from the analysis of matrix spikes (MS) and surrogate spikes. One MS will be collected per 20 samples, or one per 2 weeks if less than 20 samples are collected per week of sampling activities. The compounds used and their accuracy limits are set by the CLP SOW (USEPA, 1990a & 1990b). Accuracy for the analysis using methodology not specified

in the CLP SOW will be assured through standard laboratory QA/QC methods. Laboratory accuracy requirements are provided in Appendix E.

6.3.2 Precision

Measurements of the data precision are necessary to demonstrate the reproducibility of the data. Precision for the CLP Target Compound List (TCL) analyses will be determined from the analysis of matrix spike duplicate (MSD) and replicate samples. One MSD will be collected with each MS. Replicate samples will be collected at a rate of one per fifteen samples.

Precision will also be determined for surface- and ground-water samples by the analysis of duplicate samples. The relative percent difference (RPD) for each compound found will be calculated for later use during data assessment. An advisory limit of ±20 percent for RPD will be used for sample values greater than 5 times the contract required detection limit (CRDL). Precision requirements for each laboratory are provided in Appendix E.

6.3.3 Completeness

Completeness is a measure of the amount of valid data obtained from the measurement program, compared to the total amount collected. The validity of the collected data will be evaluated by RI utilizing the appropriate QA/QC guidelines. Laboratory completeness requirements are provided in Appendix E.

6.3.4 Representativeness

All data should be representative of actual conditions at the sampling location. The soil, sediment, surface-water, and ground-water sampling network was designed to provide data representative of site conditions. Considerations for evaluating the representativeness of the data include, but are not limited to, the location being sampled, the methods used to obtain environmental samples at the site, and the appropriateness of the analytical method to the type of sample obtained. All field activities will be performed according to the protocols outlined in the Field Sampling Plan. Laboratory representativeness requirements are provided in Appendix E.

6.3.5 Comparability

Comparability will be achieved by utilizing standardized sampling and analysis methods and data reporting format. To the extent feasible, the environmental data will be generated such that it is comparable. There are certain limitations to this objective due to the fact that historical data were not generated for TCL analytes by CLP methods. The analytical results from the ground-water samples from the existing monitoring wells will be compared to the existing ground-water data base. An evaluation will be performed to determine whether analysis for the TCL has identified any other compounds that were previously unknown at the site.

6.3.6 Quantitation Limits

Quantitation limits for the TCL analyses are provided in the USEPA CLP SOW, (unless dilution or interference effects make it necessary to raise them) and in each Laboratory QAPP (Appendix E). The laboratories will make every effort to achieve quantitation limits as low as practicable and will report estimated concentration values at less than the detection limit by flagging the value with a J.

6.3.7 Field Blanks

To determine if cross-contamination has occurred during sampling, field blanks will be collected at a rate of one per equipment type per decontamination event not to exceed one per day. For aqueous samples, laboratory-grade distilled water will be poured through the decontamined sampling device and into laboratory containers. For aqueous samples to be analyzed for dissolved metals, a separate field blank will be collected by pouring laboratory-grade water through the filtering apparatus. One combined field blank will be collected from all hand-held soil and sediment sampling equipment using the same procedures as in sample collection. Blanks will be analyzed by the same method as the samples for which the blanks are collected.

6.3.8 Trip Blanks

One trip blank, consisting of two 40-ml glass vials filled with deionized water, will be provided by the selected laboratory for each container used to ship and store volatile organic aqueous samples during each sampling event. Trip blanks for aqueous samples will be analyzed for TCL VOCs by USEPA CLP SOW methods.

6.3.9 Replicate Samples

Replicate samples will be collected to demonstrate the reproducibility of the sampling technique. [redacted] samples. This will be apart from the replicates a laboratory must run, and will not be replaced by a laboratory-generated replicate.

The replicate sampling location will be arbitrarily selected for each sampling event. Since the replicate will be blind to the laboratory, [redacted] and sample number on the label and chain of custody. The actual sampling location will be recorded in a daily log.

6.3.10 Matrix Spike/Matrix Spike Duplicate

The matrix spike/matrix spike duplicate (MS/MSD) will be used to assess laboratory accuracy and precision. The MS/MSD will be collected for aqueous samples at a minimum rate of one per group of 20, or one per 2-week sampling event.

6.3.11 Laboratory Blanks

Laboratory blanks are prepared and analyzed by the laboratory. Method blanks will be analyzed for background contamination from the laboratory as specified by the CLP SOWs.

6.3.13 Container Blanks

Certified I-Chem 300 Series containers will be used. The manufacturer provides a Certificate of Analysis for each lot verifying that the containers are analyte-free (based on CLP analysis). Consequently, additional [redacted]

6.4 SAMPLE CUSTODY

Sample custody procedures are designed to provide documentation of preparation, handling, storage, and shipping of all collected samples. An example of the chain-of-custody form, which will be used during this investigation, is attached in Appendix B.

Samples collected during the site investigation will be the responsibility of identified persons from the time they are collected until the derived data, are incorporated into the final report. Stringent chain-of-custody procedures will be followed to document sample possession.

6.4.1 Field Custody

1. The field technician is responsible for the care and custody of the samples collected until they are delivered to the analyzing laboratory or entrusted to a carrier.

2. Log books and other records will always be signed and dated on each page.

3. Chain-of-custody sample forms will be completed to the fullest extent possible prior to sample shipment. They will include the following information: sample number, time collected, source of sample and location, preservative, and name of sampler. These forms will be filled out in a legible manner, using water-proof ink, and will be signed by the sampler. Similar information will be provided on the sample label which will be securely attached to the sample bottle. In addition, sampling forms will be used to document collection, filtration, and preparation procedures.

6.4.2 Transfer of Custody and Shipment

The following procedures will be used when transferring custody of samples:

1. Samples will always be accompanied by a chain-of-custody record. When transferring samples, the individuals relinquishing and receiving them will sign, date, and note the time on the record. This record documents the sample custody transfer from the sampler to the laboratory, often through another person or carrier. Upon arrival at the laboratory, internal custody procedures will be followed, as discussed in the laboratory QAPP (Appendix E).

2. Samples will be packaged properly for shipment and dispatched to the laboratory for analysis, with individual custody records accompanying each shipment. Shipping containers will be sealed for shipment to the laboratory. The method of shipment, courier name, and other pertinent information, will be entered in the remarks section

of the custody record.

3. All shipments will be accompanied by the chain-of-custody record identifying the contents. The original record will accompany the shipment; and a copy will be retained by the field sampler.

4. Proper documentation will be maintained for shipments by common carrier.

6.4.3 Sample Preservation and Shipment Procedures

The following procedures will be followed when shipping samples for laboratory analysis:

1. Samples requiring refrigeration will be promptly chilled with ice or "Blue Ice™" or equivalent to a maximum temperature of 4°C and packaged in an insulated cooler for transport to the analyzing laboratory.

2. Only shipping containers which meet all applicable state and federal standards for safe shipment will be used. Shipping containers will be sealed with tape.

3. Custody seals will be placed over the opening of shipping containers as an indicator of tampering.

4. The field chain-of-custody document will be placed inside container in a sealed plastic envelope after the courier has signed the document.

5. The samples will be collected over a 2-day period and shipped by the end of the second day by overnight courier.

6.4.4 Field Documentation Responsibilities

It will be the responsibility of the RI Field Hydrogeologist to secure all documents produced in the field (i.e., geologist's daily logs, lithologic and sampling logs, communications, etc.) at the end of each work day.

6.5 FIELD MEASUREMENT AND CALIBRATION PROCEDURES

[redacted] Photoionization, radiation, monitoring, and geophysical survey equipment will also be used on-site periodically as described in Section 4.0 of the RI Work Plan. Field equipment such as the photoionization equipment (TIP or HNU), the pH and specific conductance meters, geiger counter, and any geophysical equipment used during this project will be calibrated and operated in accordance with the manufacturer's instructions and manuals (Table 8). A log book will be kept which documents the calibration results for each field instrument. The log book will include the date, standards, personnel, and results of the calibration.

6.6 DATA REDUCTION, VALIDATION AND REPORTING

The data generated by the laboratory will be sent to the RI Project Manager, validated by a RI chemist, and stored by the RI Project Manager until completion and acceptance of the RI report.

All data collected in the remedial investigation, including field and laboratory (chemical and geotechnical) results will be reduced, validated, summarized, and reported.

6.6.1 Data Reduction

The reduction of the field data will consist of summarizing the raw field data, including the well logs, and sample locations. Data will be presented in the form of tables, well logs, illustrations, and graphs, as deemed appropriate by the RI Project Manager.

The analytical laboratory will provide all CLP deliverables as specified in the CLP-SOW. The analytical data from the laboratory will be reduced to appropriate forms as determined by the RI Project Manager. The original data and reduced form will be maintained at the RI office until acceptance of final reports. The reduced data will be checked by a RI scientist against original data to determine if transcription or calculation errors have occurred.

6.6.2 Data Validation

Data validation consists of a stringent review of an analytical chemical data package with respect to sample receipt and handling, analytical methods, data reporting and deliverables, and document control. The quality of data generated by a laboratory is extremely important; it is an integral part of the investigation and should be clearly tied to the project goals. Data used to develop qualitative trends, for example, will not have the same data validation requirements as data used for litigation purposes.

The reviewer will prepare the data validation report according to SOP No. HW-6 and SOP No. HW-2, 1990 revisions. After the data are validated, a list of nonconformities will be generated and used to determine whether they meet the data quality objectives. Nonconformities require data qualifiers, which are used to alert the data user to inaccurate or imprecise data. The reviewer may make professional judgments and/or comments on the validity of the overall data package for a sampling event. This is particularly appropriate for sampling events in which there are several quality control criteria out of specification. In these cases, it may be required that the sample be re-analyzed.

The data package will include a data assessment checklist and narrative, a rejection summary form, and an organic and inorganic regional data assessment form. Upon completion, the data package and accompanying data review will be sent to the USEPA Regional Sample Control Center for their review.

The net result will be a data package which has been carefully reviewed for its adherence to prescribed requirements and its suitability for its intended use. Data validation thus plays a major role in determining the confidence with which key technical evaluations will be made.

6.6.3 Data Reporting

The analytical data, including quality control samples, will be reported in tabular form with identification of sample number, matrix, parameters, detection limits, and detected concentrations. Any compounds detected in blank samples will be noted in the table and footnoted on other samples.

6.7 INTERNAL QUALITY CONTROL CHECKS

There are two types of quality assurance mechanisms used to ensure the production of analytical data of known and documented quality: analytical method and program QA. The internal quality control procedures for the analytical services on environmental samples to be provided are specified in the USEPA CLP SOW and Appendix E. These specifications include the types of control samples required (sample spikes, surrogate spikes, reference samples, controls, blanks), the frequency of each control, the compounds to be used for sample spikes and surrogate spikes, and the quality control acceptance criteria. It will be the laboratory's responsibility to document, in each package, that both initial and on-going instrument and analytical QC criteria are met. This documentation will be included in the packages generated by the selected laboratory.

The field-collected quality control sample results will also be compared to acceptance criteria and documented. Any samples in non-conformance with the QC criteria will be identified and re-analyzed by the laboratory, if possible. The following procedures will be employed for the MRFA site samples:

- Proper storage of samples.
- Use of qualified and/or certified technicians.
- Use of calibrated equipment traceable to National Bureau of Standards or USEPA standards.
- Formal independent confirmation of all computation and reduction of laboratory data and results.
- Use of standardized test procedures.
- Inclusion of replicate samples at a frequency of one replicate per fifteen samples.

6.8 PERFORMANCE AND SYSTEM AUDITS

Performance audits of laboratories participating in the CLP are performed quarterly in accordance with the procedures and frequencies established by USEPA for the CLP.

The laboratory may be asked by USEPA to demonstrate its capability to perform analyses in compliance prior to conducting any project analyses. Analyses of performance evaluation (PE) samples may be waived at USEPA's discretion if within the past six months the laboratory has satisfactorily analyzed PE samples submitted by USEPA. In this event, documentation of such prior and recent PE sample analyses will be submitted to the USEPA.

System audits will be performed on a continuous basis, as appropriate, to assure that the work is being implemented in accordance with the approved project SOPs and in an overall satisfactory manner.

- The RI Field Hydrogeologist will supervise and check on a daily basis that field measurements are made accurately, equipment is thoroughly decontaminated, samples are collected and handled properly, and that the field work is accurately and neatly documented. QA checklists will be filled out daily during the drilling, installation, and development of new monitoring wells and during monitoring well sampling. The QA Daily Checklists for these activities are provided in Appendix B.

- The RI QA Officer will review on a timely basis the data packages submitted by the laboratory to check that the data were obtained through the approved methodology with the appropriate level of QC effort and reporting, that holding times were met, and that the results are in conformance with the QC criteria. Every attempt will be made to ensure that holding times, etc. will be adhered to through telephone communication with the appropriate laboratories. On the basis of these factors, the RI QA Officer will evaluate the data quality and limitations.

- The RI Project Manager will oversee the RI Field Hydrogeologist and RI QA Officer, and check that management of the acquired data proceeds in an organized and expeditious manner.

- System audits for the laboratory are performed on a regular basis by USEPA, as well as by appropriate state agencies.

6.9 PREVENTIVE MAINTENANCE

A program for the maintenance of field equipment has been established to ensure the availability of equipment in good working order when and where it is needed:

- The Equipment Manager keeps an inventory of the equipment in terms of item (model and serial number) quantity and condition. Each item of equipment is signed out when in use, and its operating condition and cleanliness checked upon return.

- The Equipment Manager conducts routine checks on the status of equipment, and is responsible for the stocking of spare parts and equipment readiness.

- The Equipment Manager maintains the equipment manual library and trains field personnel in the proper use and care of equipment.

- The RI Field Hydrogeologist works with the Equipment Manager to ensure that the equipment is tested, cleaned, charged, and calibrated in accordance with the manufacturer's instructions before being taken to the job site.

The laboratory follows a defined program to prevent the failure of laboratory equipment and instrumentation. This program, as described in the Laboratory QAPP (Appendix E), includes the periodic inspection, lubrication, cleaning, and replacement of parts of the equipment.

6.10 DATA ASSESSMENT PROCEDURES

All data generated during the RI will be assessed to determine whether it meets the data quality objectives. Data generated in the investigation will be assessed for its representativeness, accuracy, and precision. The completeness of the data will also be assessed by comparing the valid acquired data to the project objectives to see that these objectives are being addressed and met. The specific procedures used to determine data precision, accuracy, and completeness by the analytical laboratories will be provided in the analytical reports. Accuracy will be determined using laboratory spiked samples and laboratory field blanks.

The representativeness of the data will be assessed by determining if the data are consistent with known or anticipated hydrogeologic or chemical conditions and accepted principles. Field measurements will be checked for completeness of procedures and documentation of procedures and results.

Precision and accuracy will be determined using the QC samples. Precision will be examined using replicate samples and accuracy by using blanks and spiked samples.

6.11 CORRECTIVE ACTION

The QA program will enable problems to be identified, controlled, and corrected. Potential problems may involve non-conformance with the SOPs and/or analytical procedures established for the project or other unforseen difficulties. Any person identifying an unacceptable condition will notify the RI Project Manager. The RI Project Manager and RI Quality Assurance Officer, will be responsible for developing and initiating appropriate corrective action and verifying that the corrective action has been effective.

The laboratory maintains an internal closed-loop corrective action system which operates under the direction of the Laboratory Quality Assurance Officer. This system, which has been designed to identify and correct both immediate and long-term problems, is described in the Laboratory QAPP (Appendix E).

6.12 QUALITY ASSURANCE/QUALITY CONTROL EVALUATION

A QA/QC review and evaluation of laboratory data and sampling and analysis procedures will be completed for each sample within three weeks of completion of the laboratory analyses. The basis for the evaluation of the data will be the procedures provided in the QAPP and the FSAP. The RI Quality Assurance Officer will review the implementation of the QAPP and FSAP on a regular basis and prepare a summary report. This report will include assessment of data quality, and the results of system and/or performance audits. Any significant QA deficiencies will be reported and identified, and corrective actions will be discussed.

APPENDIX E
HEALTH AND SAFETY PLAN

IT Corporation
13 British American Boulevard
Latham, NY 12110-1405
Tel. 518.783.1996
Fax. 518.783.8397

A Member of The IT Group

SAFETY - FIRST AND ALWAYS

IT CORPORATION
HEALTH AND SAFETY PLAN
REQUESTED AND PREPARED FOR

GENERAL ELECTRIC COMPANY
1 COMPUTER DRIVE SOUTH
ALBANY, NEW YORK 12205

FOR SITE ACTIVITIES AT

GE MALTA TEST STATION
PLAINS ROAD
MALTA, NEW YORK

PROJECT NO.
781707

Lewis Streeter
PROJECT MANAGER

John Reinemann, CIH
HEALTH AND SAFETY REPRESENTATIVE

The information in this HASP is provided solely for the protection of the health and safety of IT Corporation employees and subcontractors working under the direct supervision and control of IT Corporation on this project. IT Corporation assumes no liability for, or responsibility to, any other parties for the accuracy or completeness of the information contained herein for any use or reliance upon this HASP by any other party.

Copyright© IT Corporation All Rights Reserved.

TABLE OF CONTENTS

List of Acronyms v

Site Emergency Form viii
Hospital Location Map x
Emergency First Aid xi

1.0 INTRODUCTION 1
- 1.1 Site Description/Background Information 2
- 1.2 Project Personnel and Responsibilities 3
- 1.3 Hazard Analysis and Site-Specific Health and Safety Program Requirements . . 7
- 1.4 Contaminants of Concern Profile 8

2.0 HAZARD IDENTIFICATION AND CONTROL 12

3.0 AIR MONITORING AND NOISE MONITORING 27
- 3.1 Air Monitoring 27
- 3.2 Noise Monitoring 33

4.0 CONFINED SPACE ENTRY PROCEDURES 35

5.0 CHEMICAL HAZARD CONTROL 36
- 5.1 Chemical Handling Procedures 36
- 5.2 PPE 38
- 5.4 Site Control: Work Zones 42
- 5.5 Decontamination Procedures 44
- 5.6 Example Decontamination Diagram 45

6.0 CONTINGENCY PLANS 47
- 6.1 Field Communications 50

7.0 MEDICAL MONITORING PROGRAM 51
- 7.1 Medical/Technical Advisors 51

TABLES

Table 1. Responsibilities of On-Site Personnel
Table 2. Hazard Analysis Matrix
Table 3. Contaminants of Concern Profile
Table 4. Fluor Daniel GTI Health and Safety Training Programs
Table 5. Potential Hazards and Control
Table 6. Air Monitoring Frequency Guidelines
Table 7. Air Monitoring Action Levels
Table 8. Hazard Summary
Table 9. Noise Monitoring
Table 10. Chemical Handling Procedures
Table 11. PPE
Table 12. Site Security and Work Zone Definition
Table 13. Decontamination Procedures
Table 14. Contingency Plans for Site Emergencies
Table 15. Field Communications Methods
Table 16. Medical Monitoring Program

APPENDICES

A Agreement and Acknowledgment Form
HASP Amendment Sheet
Visitor/Trainee Guidelines
Trainee/Observer Agreement Form

B IR Form
Incident Reporting Guide

C LO/TO Procedures

D MSDS Definitions
MDSDs

E Air Monitoring Form
Daily Instrument Calibration Check Form
Noise Monitoring Form

APPENDICES (continued)

F Excavation/Trenching Safety Procedures
Trench Safety Daily Field Report
Soils Analysis Checklist
Excavation/Trenching - Underground Utilities
Underground Utility Contact Prevention and Management Plan
Excavation/Trenching - USTs
UST Removal

G CSE Hazard Analysis Form
Site-Specific Confined Spaces
CSE Permit
Confined Space Personnel Requirements

H Hot Work Permit
Hot Work JSA

I Heat/Cold Stress Procedures

J Job Safety Analysis

K Site Maps

L IT Corporation field Inspection Form

M Daily Safety Tailgate Meeting Form

N Respiratory Protection Program

LIST OF ACRONYMS

ACGIH	American Conference of Governmental Industrial Hygienists
ANSI	American National Standards Institute
BP	Breath pipe
BT	Body temperature
BTEX	Benzene, Toluene, Ethylbenzene, and Xylene
BWL	Body water loss
BWT	Body water temperature
CET	Certified Environmental Trainer
CFR	Code of Federal Regulations
CGI	Combustible gas indicator
CHMM	Certified Hazardous Materials Manager
CIH	Certified Industrial Hygienist
COHN	Certified Occupational Health Nurse
CNS	Central nervous system
CPR	Cardio-pulmonary resuscitation
CRZ	Contaminant reduction zone
CSE	Confined space entry
CSP	Certified Safety Professional
CZ	Clean zone
DM	Dust-particulate monitor
DOT	Department of Transportation
DT	Detector tube
DZ	Decontamination zone
EKG	Electrocardiogram
EMR	Environmental Medical Resources
EMS	Emergency Medical Services
EPA	Environmental Protection Agency
EZ	Exclusion zone
FID	Flame ionization detector
FP	Flashpoint
GFCI	Ground fault circuit interrupter
GM	Geiger-Mueller
HASP	Health and Safety Plan
HAZWOPER	Hazardous Waste Operations and Emergency Response

LIST OF ACRONYMS (continued)

HBV	Hepatitis B-virus
HEPA	High efficiency particulate air-purifying
HR	Heart rate
HSM	Health and Safety Manager
HSR	Health and Safety Representative
HSS	Health and Safety Specialist
HVDPE	High vacuum dual-phase extraction
HZ	Hot zone
IDLH	Immediately dangerous to life or health
ILO	International Labor Organization
IP	Ionization potential
IR	Incident Report
JSA	Job safety analysis
LEL	Lower explosive limit
LO/TO	Lockout/tagout
mg/M_3	Milligrams per cubic meter
mg/L	Milligrams per liter
MSDS	Material Safety Data Sheet
MSHA	Mine Safety and Health Administration
N	NIDA drug screen
NA	Not available
NBR	Nitrile butyl rubber
NEC	National Electrical Code
NIDA	National Institution on Drug Abuse
NIOSH	National Institute for Occupational Safety and Health
NFPA	National Fire Prevention Association
NL	NIDA-like drug screen
NRR	Noise reduction rating
O_2	Oxygen
O_3	Ozone
OM	Operations Manager
OJT	On the job training
OT	Oral temperature
OSHA	Occupational Safety and Health Administration

LIST OF ACRONYMS (continued)

PEL	Permissible exposure limit
PID	Photoionization detector
PM	Project Manager
ppb	Parts per billion
PPE	Personal protective equipment
ppm	Parts per million
RB	Random breathalyser
RBP	Random breath pipe
RCRA	Resource Conservation and Recovery Act of 1976
REL	Recommended exposure limit
RN	Registered Nurse
RR	Relative responses
RT	Random ten panel drug screen
SHSO	Site Health and Safety Officer
SLM	Sound level meter
SOW	Scope of work
SPL	Sound pressure level
STEL	Short-term exposure limit
SZ	Support zone
TLV	Threshold limit value
TP	IT Corporation ten panel drug screen
TSF	Tons per square foot
TWA	8-hour time-weighted average
UEL	Upper explosive limit
ug/L	Micrograms per liter
UST	Underground storage tank
VP	Vapor pressure
WBGT	Wet bulb globe temperature

SITE EMERGENCY FORM

Contaminants of Concern: CARBON TETRACHLORIDE, CHROMIUM, HEXAVALENT CHROMIUM, TRICHLOROETHYLENE

Minimum Level of Protection: D

Hazard Determination: Serious_____ Moderate_____ Low XXX

Do not endanger your own life. Survey the situation before taking any action.

IT Corporation Office Telephone	(518) 783-1996
Site Location Address	Plains Road, Malta, New York
Telephone Located at	Cellular Phone (to be carried on site)

EMERGENCY PHONE NUMBERS **IN THE EVENT OF ANY EMERGENCY CONTACT PROJECT MANAGER (PM) OR HEALTH AND SAFETY REPRESENTATIVE**

Ambulance	911
Fire	911
Police	911
Poison Control	800-336-6997
Hospital Name	Saratoga Hospital
Hospital Phone Number	(518) 587-8313
Project Manager	Lewis Streeter: (518) 783-1996
Site Safety Officer	Grant Anderson: (518) 783-1996
Health and Safety	John Reinemann, CIH: (518) 783-1996
Client Contact	John Uruskyj: (518) 458-6623
United States EPA	Allison Hess: (212) 637-3959

UTILITY MARKER EMERGENCY TELEPHONE NUMBERS

Utility	Color Code	Telephone Number
Water	Blue	800-962-7962
Gas	Yellow	800-962-7962
Electric	Red	800-962-7962
Telephone/Cable	Orange	800-962-7962
Sewer	Green	800-962-7962
Dig Safe Telephone Number: 800-962-7962		

HOSPITAL LOCATION MAP

See attached hospital location and General Electric Rocket Fuel Area Site Maps

HOSPITAL DIRECTIONS:	**HOSPITAL INFORMATION:**
Plains Road to 67 west. 67 west to 87 north. Exit 13 to Rt. 9 north. Follow Rt. 9 into Saratoga Springs (city). Left on Rt. 9N. Hospital is approximately 1.5 miles on Rt 9N/Church St.	**Name:** Saratoga Hospital **Address:** 211 Church Street #1 **City, State:** Saratoga Springs, NY **Phone:** Emerg: (518) 587- 8313 General: (518) 587-3222

General Electric Rocket Fuel Area Site

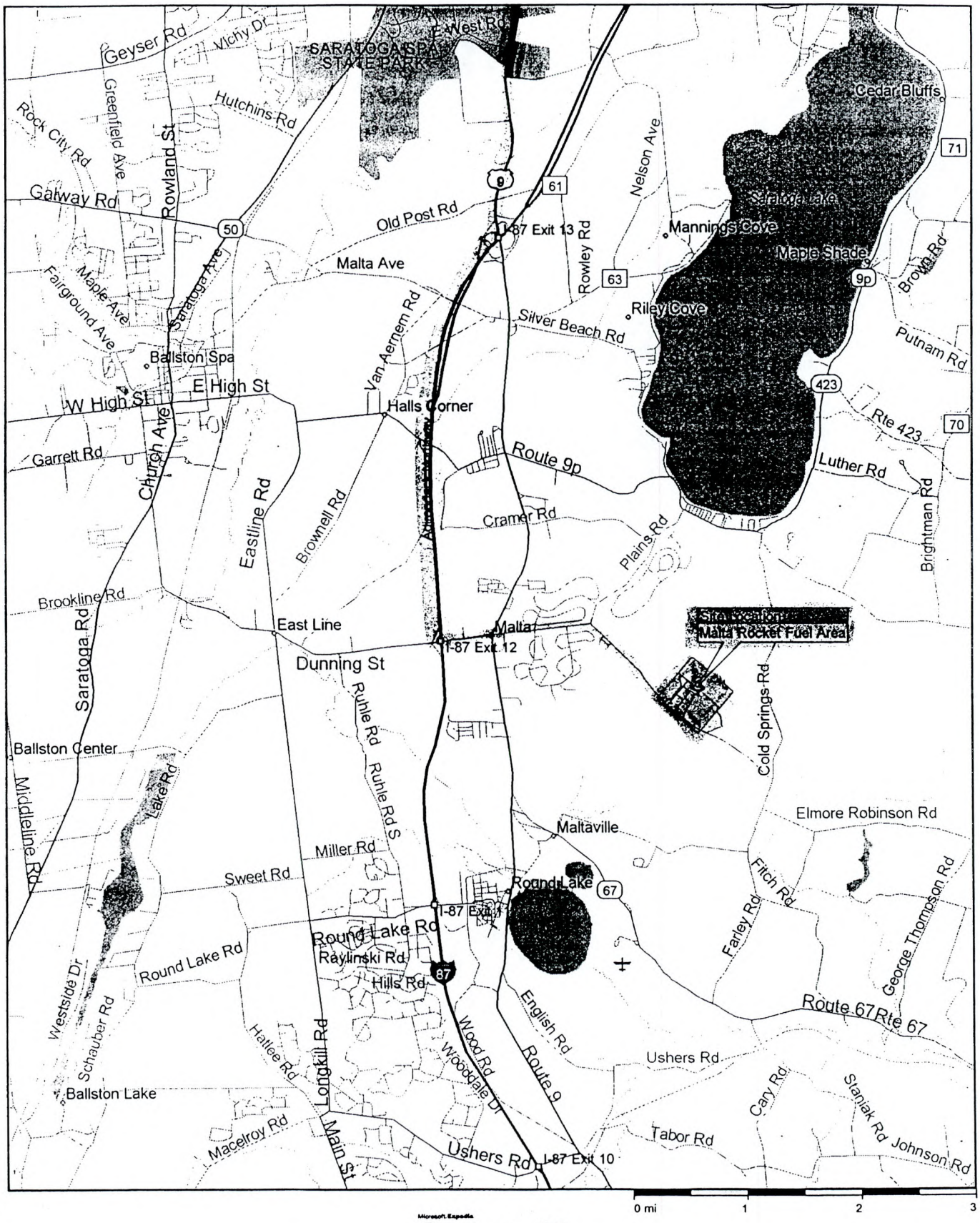

Microsoft Expedia
Streets98

Copyright © 1988-1997, Microsoft Corporation and/or its suppliers. All rights reserved. Please visit our web site at http://maps.expedia.com.

Hospital Location

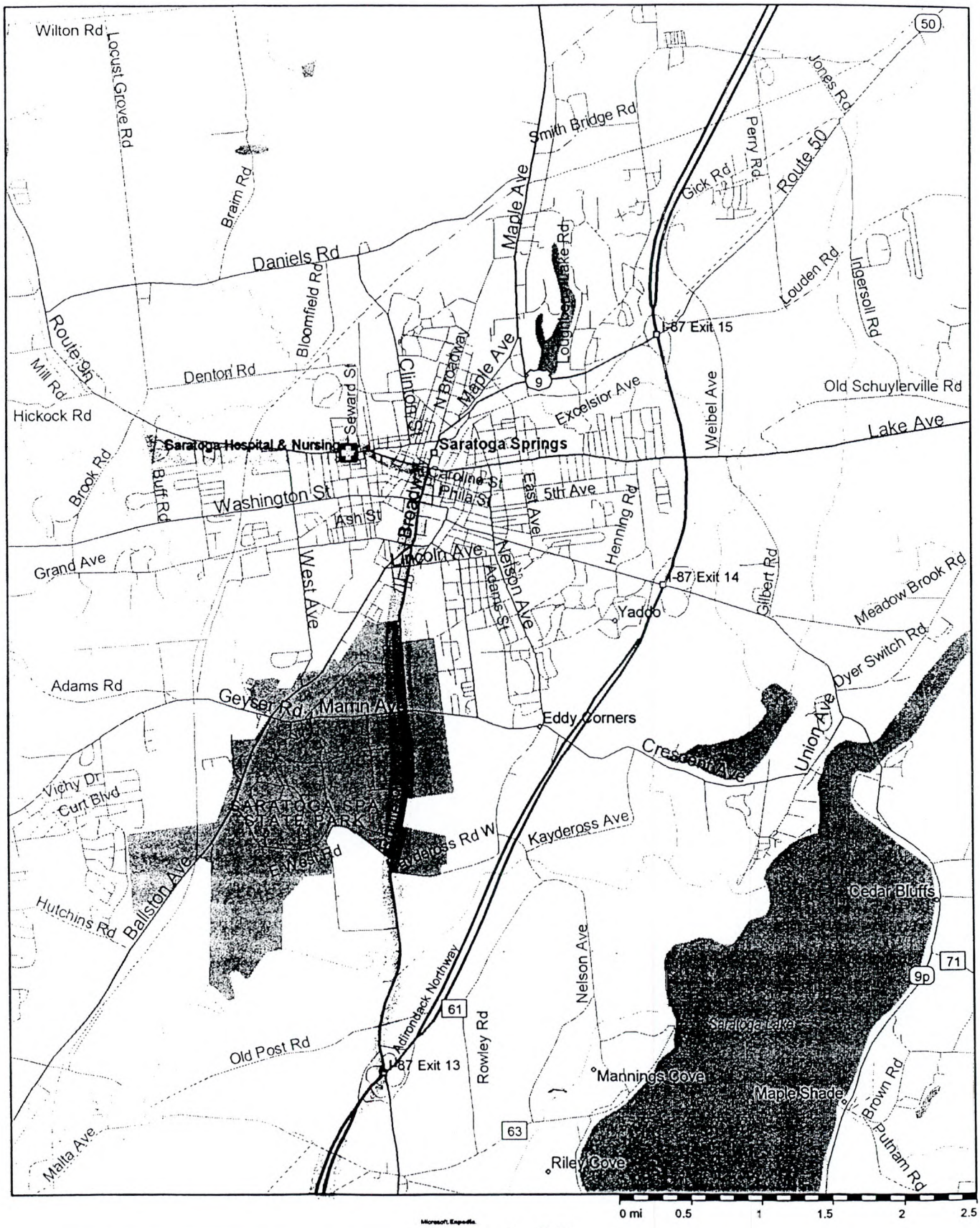

Microsoft Expedia
Streets98

Copyright © 1988-1997, Microsoft Corporation and/or its suppliers. All rights reserved. Please visit our web site at http://maps.expedia.com.

EMERGENCY FIRST AID

FIRST AID

Ingestion:	DO NOT INDUCE VOMITING. Call Poison Control - follow instructions. Administer cardiopulmonary resuscitation (CPR), if necessary. Seek medical attention.
Inhalation:	Remove person from contaminated environment. Administer CPR if necessary. Seek medical attention. DO NOT ENTER A CONFINED SPACE TO RESCUE SOMEONE WHO HAS BEEN OVERCOME UNLESS PROPERLY EQUIPPED AND A STANDBY PERSON IS PRESENT.
Skin Contact:	Brush off dry material, remove wet or contaminated clothing. Flush skin thoroughly with water. Seek medical attention if irritation persists.
Eye Contact:	Flush eyes with water for 15 minutes. Seek medical attention.
Exposure Symptoms:	Headache, dizziness, nausea, drowsiness, irritation of eyes, nose, throat, breathing difficulties.
Contingency Plan:	Report incident to PM and Health and Safety Specialist (HSS) after emergency procedures have been implemented.

RESPONDER MUST HAVE A CURRENT CERTIFICATE TO ADMINISTER FIRST AID OR CPR

1. Survey the situation. Do not endanger your own life. DO NOT ENTER A CONFINED SPACE TO RESCUE SOMEONE WHO HAS BEEN OVERCOME UNLESS PROPERLY EQUIPPED AND TRAINED. ENSURE ALL PROTOCOLS ARE FOLLOWED INCLUDING THAT A STANDBY PERSON IS PRESENT.

2. Call 911 (if available) or the fire department **IMMEDIATELY**. Explain the physical injury, chemical exposure, fire, or release.

3. Decontaminate the victim without delaying life-saving procedures.

4. If the victim's condition appears to be noncritical, but seems to be more severe than minor cuts, he/she should be transported to the nearest hospital by trained Emergency Medical Services (EMS) personnel: let the doctor assume the responsibility for determining the severity of the injury. If the condition is obviously serious, EMS must transport the victim.

5. Notify the PM and the HSS. Complete the IT Corporation Incident Report (IR) within 24 hours.

EMERGENCY FIRST AID PROCEDURES	
To Stop Bleeding	**CPR**
1. Give medical statement.	1. Give medical statement.
2. Assure airway, breathing, circulation.	2. Arousal: Check for consciousness.
3. Use **DIRECT PRESSURE** over the wound with clean dressing or your hand (use nonpermeable gloves). Direct pressure will control most bleeding.	3. Open airway with chin-lift.
4. Bleeding from an artery or several injury sites may require **DIRECT PRESSURE** on a **PRESSURE POINT**. Use pressure points for 30 - 60 seconds to help control severe bleeding.	4. Look. listen, and feel for breathing.
5. Continue primary care and seek medical aid as needed.	5. If breathing is absent, give 2 slow, full rescue breaths.
	6. Check the pulse for 5 to 10 seconds.
	7. If pulse is present, continue rescue breathing: **1 breath every 5 seconds**.
	8. If pulse is absent; initiate CPR; 15 compressions for each two breaths.

1.0 INTRODUCTION

General Electric has retained IT Corporation (IT) to perform environmental services at the General Electric Malta Rocket Fuel Area Site located on Plains Road in Stillwater, New York.

The Health and Safety Plan (HASP) is written to ensure the well-being of all field personnel and the community surrounding the site. Accordingly, project staff and approved IT Corporation subcontractors must follow the policies and procedures established in the HASP. All IT Corporation personnel and subcontractors assigned to this project must sign the Agreement and Acknowledgment Sheet (**Appendix A**) to confirm that they understand and agree to abide by the provisions of the plan.

All work will comply with IT Corporation health and safety guidelines in concurrence with all applicable sections of the Occupational Safety and Health Act (OSHA), 29 Code of Federal Regulations (CFR) 1910 and 1926; specifically 29 CFR 1910.120 and 1926.65 Standards, "Hazardous Waste Operations and Emergency Response," (29 CFR 1910.120) as well as other federal, state, and local regulations that require the development and implementation of a HASP. Generation of this document certifies that the workplace has been evaluated for the hazards as described. A hazard assessment has been performed and the adequacy of the personal protective equipment (PPE) selected is hereby certified per 29 CFR 1910.132(d) and is duly noted by the signature(s) and date appearing on the cover page of this document.

This HASP addresses the safety issues associated with this inactive research and development facility and surrounding properties, and involving the following site tasks:

- Gauging and sampling existing wells
- Surface water sampling
- Confined space entry
- Equipment operations and maintenance
- Live troubleshooting
- Lockout / Tagout

The minimum level of protection for this site is Level D. For each task, the potential hazards for employee exposure to site contaminants and/or air monitoring results, will determine the level of protection. Modified Level D will be worn during tasks that may have the potential for skin contact with contaminated media (soil or water). Upgrade to Level C and/or B will occur when

the possibility of exposure exists from the onset of site-specific tasks or results of real-time monitoring exceed established action levels listed in **Table 7**, Air Monitoring Action Levels. This HASP must be modified or amended when circumstances or conditions develop that are beyond the scope of this plan.

Any changes in project work scope and/or site conditions as described must be amended in writing by the Health and Safety Representative (HSR) on the HASP Amendment Sheet (**Appendix A**).

Table 1, Responsibilities of On-Site Personnel, lists those accountable and responsible for the implementation of the HASP. **Table 2**, Hazard Analysis Matrix, presents an overview of site-specific job tasks and the associated hazards. **Table 3**, Contaminants of Concern Profile presents an overview of the hazards and control measures associated with the site contaminants of concern. Lastly, **Table 4**, presents an overview of the IT Corporation health and safety programs in which all field personnel are required to participate. These include the medical surveillance and comprehensive training programs in accordance with OSHA Hazardous Waste Operations and Emergency Response standard, 29 CFR 1910.120.

1.1 Site Description/Background Information

The site, known as the Malta Test Station, is situated on approximately 165 acres of developed land and is located on Plains Road in the Town of Malta and Stillwater, Saratoga County, New York. The area consists of thirty-three buildings, numerous dry wells, storage and disposal areas, leach fields/septic tanks, quench pits, and a small man-made pond. The Malta Test Station has historically been used as a research and development facility for rocket and weapons testing.

The public drinking water supply for nearby residential developments is obtained from two different well fields, the Luther Forest Well Field and the Cold Springs Well Field. These two well fields consists of six production wells located approximately one mile from the site. In 1985, elevated concentrations of volatile organic compounds (VOCs) and metals, primarily carbon tetrachloride, trichloroethylene, and chromium, respectively were found at elevated concentrations in the on site drinking water supply. Similarly, VOC and chromium are found in

groundwater below the Malta Test Station. The highest concentration of VOCs detected in the groundwater were located in the central portion of the Malta Test Station. To date the results of early warning monitoring sampling have indicated that the Site has not impacted the water quality of the Luther Forest residential development.

In July 1987, the Malta Test Station gained a position on the National Priorities List (NPL). During the time between 1986 and 1990 a series of monitoring wells were installed and a sampling program incorporating these wells and surface water sampling was created. A Unilateral Administrative Order (UAO) was issued by the United States Environmental Protection Agency (USEPA) in September 1989 requiring a Remedial Investigation (RI) and Feasibility Study (FS) to be conducted by the potentially responsible parties. In March 1990, the Remedial Investigation and Feasibility Study was undertaken. A final RI and FS were submitted to the USEPA in the fall of 1995. A Record of Decision (ROD) was issued by the USEPA in July 1996, selecting natural attenuation and degradation of VOCs that are not captured by pumping wells as the remedy for impacted groundwater. The ROD also called for continued pumping of the Test Station water supply wells and treatment of the water by air stripping to provide acceptable drinking water to the Test Station. A Consent Decree was signed in September 1997 by the USEPA requiring implementation of the selected remedy. Subsequently, Remedial Designs and two O&M Manuals have been prepared for Remedial Work Element I, Drinking Water, and Work Element II, Groundwater. A separate Health and Safety Plan has been included in each of the O&M Manuals and should also be reviewed prior to commencing site work.

1.2 Project Personnel and Responsibilities

IT Corporation will oversee and act accordingly during all phases of the project. The following management structure will be instituted for the purpose of successfully and safety completing this project.

Technical Advisors

John Reinemann, CIH
IT Corporation, Albany, NY (518) 783-1996

Clifford Florczak, CSP, CIH
IT Corporation, Chicago, IL (312) 499-3508

The specific duties of the technical advisors include:

- providing technical input into the design and implementation of the site HASP,
- advising on potential for worker exposure to project hazards along with appropriate methods and/or controls to eliminate site hazards.

A site health and safety officer (SHSO) will be assigned on a full time basis to each site during site activities and shall assist and shall represent the Health and Safety Manager (HSM). The SHSO shall have the responsibility and authority to implement and enforce the approved HASP, this includes modifying/halting work, and removal of personnel from the site if work conditions change and effect on-site/off-site health and safety matters. The SHSO will serve as the main contact for any on-site emergency situation.

Table 1. Responsibilities of On-Site Personnel

Title	General Description	Responsibilities
Project Manager (PM) Lewis Streeter	Reports to upper-level management. Has authority to direct response operations. Assume total control over site activities.	■ Prepares and organizes background review of the project, the work plan, the HASP, and the field team. ■ Obtains permission for site access and coordinates activities with appropriate officials. ■ Sees that the work plan is properly carried out and on schedule. ■ Briefs the field personnel on specific assignments. ■ Together with the SHSO sees that health and safety requirements are met. ■ Prepares final report and follow up on Incident Report (IR) events.

Title	General Description	Responsibilities
SHSO Grant Anderson	Advises the PM on all aspects of health and safety on site. Stops work if site operations threaten worker or public health and safety. Informs health and safety specialist of any changes in site conditions or project status.	■ Periodically inspects protective clothing and equipment. ■ Sees that protective clothing and equipment are properly stored and maintained. ■ Controls entry and exit at the access control points. ■ Monitors the workers for signs of stress, including heat stress, cold exposure, and fatigue. ■ Implements the HASP. ■ Conducts periodic inspections to assess whether the HASP is being followed. ■ Enforces the "buddy" system. ■ Informed of emergency procedures, evacuation routes, and telephone number of local hospital, poison control center, fire department, and police department. ■ Notifies, when necessary, local public emergency officials. ■ Submits IRs promptly to site supervisor and PM. ■ Maintains communication with health and safety representative on site activities. ■ Coordinates emergency medical care. ■ Sets up decontamination lines and decontamination solutions appropriate for the chemical contaminants encountered. ■ Controls the decontamination of equipment, personnel, and samples from contaminated areas. ■ Facilitates the proper disposal of contaminated clothing and materials. ■ Maintains the availability of required equipment. ■ Advises IT Corporation health services and medical personnel of potential exposures. ■ Notifies emergency response personnel in the event of an emergency. ■ Maintains and oversees operation of monitoring equipment and interpretation of data from the monitoring equipment.

Title	General Description	Responsibilities
Project Supervisor Brian Neumann	Reports to PM. Has authority to direct response operations. Assumes total control over site activities.	■ Conducts Daily Safety Tailgate Meeting and documents attendance (**Appendix M**). ■ Conducts periodic field health and safety inspections (**Appendix L**). ■ Manages field operations. ■ Executes the work plan and schedule. ■ Enforces safety procedures. ■ Coordinates with the SHSO in enforcing worker protection levels. ■ Enforces site control. ■ Documents field activities and sample collection. ■ Notifies when necessary, local public emergency officials. ■ Submits IRS and initiates follow up with PM and SHSO.
Work Team	Reports to project supervisor for on-site activities. Work parties must comprise at least two people for high hazard operations.	■ Safely completes on-site tasks required to fulfill the work plan. ■ Complies with the HASP. ■ Attends and participates in Daily Safety Tailgate Meetings. ■ Notifies SHSO or supervisor of suspected unsafe conditions. ■ Submits IRs to SHSO and Project Supervisor.

1.3 Hazard Analysis and Site-Specific Health and Safety Program Requirements

Site-specific job tasks and the associated hazards are identified in **Table 2**, Hazard Analysis Matrix. For each task involved with the project are the type of hazards that may be encountered. Utilize the hazard analysis table as a guide for implementing specific health and safety programs. **Table 5**, Potential Hazards and Controls provide guidelines to follow when conducting the tasks involved with this project.

Table 2. Hazard Analysis Matrix

Hazards	Tasks					
	Well Gauging	Surface and Well Sampling	Confined Space Entry	System O & M	Live Trouble-shooting	Lockout / Tagout
Contaminants of Concern Exposure	X	X	X	X	X	X
OSHA Chemicals Exposure	X	X	X	X	X	X
Mechanical Equipment/ Construction			X	X	X	X
Electrical		X	X	X	X	X
Fire and Explosion			X	X	X	
Heat/Cold Stress	X	X	X	X	X	
Vehicular Traffic	X	X		X		
Pedestrian Traffic	X	X		X		
Overhead Utilities				X	X	
Oxygen Deficiency			X			
Noise		X		X	X	
Poisonous Plants	X	X		X		
Snakes/Spiders/ Insects	X	X	X	X	X	X

Site-Specific Health and Safety Program Requirements

Based upon the site-specific hazard analysis, the following programs must be implemented and the accompanying forms, found in the appendices of the HASP, completed. The completed forms can then be attached to this document.

SITE-SPECIFIC PROGRAM	HASP APPENDIX
Air Monitoring Program	E
Noise Monitoring Program	E
Site-Specific Lockout/Tagout (LO/TO) Procedures	C
Excavation/Trenching	F
Underground Utility Contact Prevention and Management Plan	F
Confined Space Entry	G
Heat/Cold Stress Procedure	I
Hot Work Permit	H
Daily Safety Tailgate Meeting	M
Respiratory Protection Program	N

1.4 Contaminants of Concern Profile

Based upon information received from the background information, site history, and site characterization is a summary profile of the hazards and control measures to follow for the contaminants of concern. Summarized in **Table 3**, the profile provides an overview of the hazards associated with potential exposure to the contaminants of concern and the preventative measures. For more detailed and specific information, always refer to the Material Safety Data Sheet (MSDS) or equivalent information for the compound located in **Appendix D**.

Table 3. Contaminants of Concern Profile

Contaminant of Concern	Profile of Hazards and Control Measures to Follow
Carbon Tetrachloride	Suspected human carcinogen. Highly toxic by inhalation, ingestion, and skin absorption. Symptoms of exposure may include eye, nose, skin, and throat irritation, headaches, dizziness, metal confusion, nausea, abdominal pain. Perform air monitoring, stay upwind when sampling or working near source if possible. Wear PPE and read MSDS for additional control measures and health hazard information. OSHA PEL = 10 ppm ACGIH TWA-TLV = 5 ppm
Trichloroethylene	Possible carcinogen. Vapors irritating to eyes, nose, and respiratory tract. Symptoms of exposure may include blurred vision, headache, overexcitement, drunkenness, memory loss, altered or impaired sense of sight, touch, and smell. Perform air monitoring, stay upwind when sampling or working near source if possible. Wear PPE and read MSDS for additional control measures and health hazard information. OSHA PEL = 100 ppm ACGIH TWA-TLV = 50 ppm
Chromium Metal and non-hexavalent compounds	A human poison when ingested. Symptoms of exposure may include headache, coughing, shortness of breath, fever, nasal and eye irritation, and dermatitis. Perform air monitoring, stay upwind when sampling or working near source if possible. Wear PPE and read MSDS for additional control measures and health hazard information. OSHA PEL = 0.5 mg/m^3
Hexavalent Chromium	Human carcinogen. Eye, skin, nose, and throat irritant. Symptoms of exposure may include wheezing, shortness of breath, redness of skin, itching, pulmonary edema, nosebleeds, asthma, and bronchitis. Perform air monitoring, stay upwind when sampling or working near source if possible. Wear PPE and read MSDS for additional control measures and health hazard information. ACGIH TWA-TLV = 0.05 mg/m^3 (for water insoluble compounds)

Table 4. IT Corporation Health and Safety Training Programs

Training Program	Requirement/Action
■ Specific training program requirements are described in IT Corporation's Health and Safety Procedure Manual, Policy ■ Training requirements and programs comply with the OSHA Hazardous Waste Operations and Emergency Response standard, 29 CFR 1910.120.	■ Field personnel must complete a minimum of 40 hours of hazardous waste activity instruction. ■ Field personnel must complete a minimum of 3 days supervised field instruction. ■ Field personnel assigned to the site will also receive 8 hours of refresher training each year. ■ On-site managers and supervisors directly responsible for employees engaged in hazardous waste operations receive an additional 8 hours of supervisory training. ■ Field personnel assigned to site also receive first aid/cardio-pulmonary resuscitation (CPR) and blood borne pathogen training. ■ Field personnel and subcontractors assigned to site must participate in "Daily Safety Tailgate Meeting" and document their attendance.
■ Excavation and Trenching	■ On-site managers and supervisors directly responsible for employees engaged in excavation/trenching operations receive the IT Corporation 4-hour "Competent Person Training Seminar."

Training Program	Requirement/Action
■ Authorized supervisor, attendant, and entrant training for permit required confined space entry meet requirements outlined in 29 CFR 1910.146.	■ Field personnel assigned to site who must supervise, watch over and/or enter permit required confined spaces receive the IT Corporation 8-hour (or equivalent) "Confined Space Entry" course.
■ Fall protection training that meets requirements in 29 CFR 1926.503	■ Field personnel assigned to site who must work in areas with fall hazards six feet or greater must receive the IT Corporation 2-hour "Fall Protection" course.
■ IT Corporation requirement for removing underground storage tanks (UST).	■ Field personnel assigned to site who are tasked with the assessment and removal of USTs must complete the 4-hour IT Corporation "Underground Storage Tank Removal" course.
■ Orientation of plant operations, hazards, safe work practices, and emergency procedures to follow that meets the requirements of the OSHA Process Safety Standard, 29 CFR 1910.119.	■ Project personnel who are on the project site that falls under the Process Safety Standard will receive orientation by a company representative.
■ Respiratory Protection Program Training requirements of OSHA 29 CFR 1910.134	■ Project personnel will be trained in the requirements of the revised OSHA Respiratory Protection Standard prior to wearing respiratory protection at the job site.

2.0 HAZARD IDENTIFICATION AND CONTROL

Based upon the hazard analysis of the tasks that will be conducted for the project, **Table 5** lists the general procedures and practices to follow to prevent injury or illness. Appropriate training for specific hazards must be completed by field personnel prior to initiating work activities. Precautions must be taken to prevent injuries and exposures to the following potential hazards. For additional information, refer to the IT Corporation Health and Safety Policies and Procedures, or consult with your health and safety professional.

Table 5. Potential Hazards and Control

Potential Hazard	Control
Exposure to OSHA Defined Hazardous Materials (See **Appendix D**: MSDS Definitions and MSDSs)	1. All chemicals brought on-site by IT Corporation personnel or their subcontractors, such as pipe glues, solvents, reagents, decontamination solutions, or any other OSHA defined hazardous material must be adequately labeled and the MSDSs available on-site. 2. MSDSs brought on-site can be attached in Appendix D or in the MSDS binder that is kept in the company vehicle. 3. Training on OSHA defined hazardous materials must be completed and documented. Use the Daily Safety Tailgate Meeting Form in **Appendix M** to record training attendance.
Exposure to Surface/ Subsurface Airborne Dust	1. Stand up-wind whenever intrusive activities occur and generate visible signs of airborne dust. 2. Monitor air for airborne soil dust (surface or subsurface soil) with portable aerosol dust-direct reading instrument. 3. >2.5 mg/M^3 in breathing zone requires upgrade to Level C. 4. > 50 mg/M^3 in breathing zone requires upgrade to Level B. Approval for Level B must first be approved by HSR. 5. Utilize wet methods (spraying ground, misting work area, wet drilling, etc.) when visible signs of airborne dust are generated.

Potential Hazard	Control
Fall Protection	1. Assess the work to determine if there is a potential for falling. 2. Make a determination of the distance of the potential fall. 3. A fall protection system must be used for potential falls greater than 6 feet. 4. Consult a competent person, such as the HSR, regarding the applicability requiring fall protection and what type of protection systems should be used. 5. Inspect all fall protection equipment and anchoring points prior to their use. 6. Ensure Fall Protection training for applicable employees is completed prior to initiating work activities.
Vehicular Traffic	1. Wear traffic safety vest when vehicle hazard exists. 2. Use cones, flags, barricades, and caution tape to define work area. 3. Use vehicle to block work area. 4. Engage police detail for high-traffic situations. 5. Refer to section 5.3 for specific details and guidance.
Inclement Weather	1. Stop outdoor work during electrical storms and other extreme weather conditions such as extreme heat or cold temperatures. 2. Take cover indoors or in vehicle. 3. Listen to local forecasts for warnings about specific weather hazards such as tornados, hurricanes, and flash floods.

Potential Hazard	Control
Exposure to Chemical Products (See **Appendix D**: MSDS Definitions and MSDSs)	1. Stand up-wind of chemical products whenever possible. 2. Minimize direct contact and contact time with contaminated media to prevent exposure. 3. Avoid walking through discolored areas, puddles, leaning on drums, or contacting anything that is likely to be contaminated, unless wearing the appropriate PPE. 4. Do not eat, drink, smoke and/or apply cosmetics in the hot or warm zones. 5. Wear appropriate PPE when it is required to come in contact with contaminated media or surfaces. 6. Level D PPE must be worn as a minimum when on project site. 7. > 3 parts per million (ppm) organic vapors, sustained for 5 minutes, in the breathing zone requires monitoring with detector tubes for carbon tetrachloride (CCl_4). If levels >3 ppm to 5 ppm, upgrade to Level C PPE is required. If levels of CCl_4 are > 5 ppm, upgrade to Level B is required with approval from the HSR 8. 3 to 25 ppm organic vapors, sustained for 5 minutes, in breathing zone requires monitoring with detector tubes for trichlorethylene (TCE). If levels of TCE are > 25 to 50 ppm, upgrade from Level C is required. If levels > 50 ppm upgrade to Level B required, with approval from HSR. Note: Employees must be trained in Level B PPE prior to working in Level B. 9. Monitoring for should be conducted prior to starting a task, where exposed to carbon tetrachloride, as well as once every two hours, where exposure is anticipated.. 10. If any specific contaminant exceed levels >10 times their PEL, workers must be quantitatively fit tested and achieve a fit factor of 500 to continue working with a full face air purifying respirator (APR). If contaminant levels exceed 50 times the PEL, Level B PPE must be worn. Personnel must have approval from the HSR and take required training on Level B PPE prior to working in Level B. 11. If unknown materials are encountered, call the HSR.

Potential Hazard	Control
Utility Lines Contact	1. Contact Dig Safe to have utility lines marked prior to excavation/trenching 2. Refer to site drawings or customer interviews if on private property for utility locations. 3. Hand dig 3 to 5 feet down and 5 feet each side of utility marker to avoid breaking utility lines. 4. Refer to **Appendix F** for Underground Utility Contact Prevention Management Plan.
Erecting Temporary Structure or Working From Aerial Lift	1. Wear leather gloves while attaching support members to protect against pinching injuries. 2. While working from elevated levels greater than 6 feet, ensure that all employees have 100% fall protection with full body harnesses and guardrails. 3. Do not stand under loads that are being raised or lowered with cranes or aerial lifts. 4. Conduct pre-operational inspection of aerial lifts to include: tire air pressure, hydraulic fuel level and pressure check, make sure pivot pins are secured, check hoses for worn areas, check for cracks or deviations in welded parts, the safety limit switch should work freely, security of the guardrail system on the platform, check both ground and platform control functions, raise and lower each boom system separately, listen for any unusual noises, vibrations, or uneven operations. 5. Maintain a safe distance of 20 feet from unguarded overhead power lines. 6. Conduct site evaluation to determine proper positioning for the unit. Make sure surface is level. Cordon off holes, drop-offs, bumps or weak ground surfaces. 7. Never climb a raised platform or stand on the mid-rail or top-rail. 8. Tools should always be hung or put into a belt whenever possible.

Potential Hazard	Control
CSE	1. Ensure personnel assigned meet CSE training requirements. 2. Complete CSE Hazard Analysis Form in **Appendix G**. 3. Complete CSE permit. Post sign. 4. Ensure pre-entry CSE safety meeting is conducted. 5. Remove vault cover using proper lifting techniques. 6. Promote natural ventilation by opening the space to fresh air, if needed utilize mechanical purge ventilation. 7. Conduct remote air monitoring prior to entry. 8. Attendant can act as CSE Supervisor and must be present at CSE entry point all times when entrant is in CSE. 9. Access work for fall hazards and ensure provisions for non-entry rescue have been met. 10. Enter only when safe; conduct continuous air monitoring.
Installation and Operation of Soil Vapor Extraction (SVE) System (Not anticipated)	1. Competent person must be present during excavation/trenching activities; follow procedures in **Appendix F**. 2. SVE effluent pipe and galvanized steel SVE pipes from thermal SVE wells are "HOT" and must be labeled to prevent skin burns. 3. LO/TO points must be identified for blower motors and specific LO/TO procedures followed as listed in **Appendix C**. 4. Monitor for carbon tetrachloride and trichloroethylene with PID and detector tubes when possibility of exposure occurs such as during emission monitoring activities or system maintenance. Follow air monitoring schedule and action levels in **Table 7** of this HASP.
Installation and Operation of Air Sparge System (Not anticipated)	1. Competent person must be present during excavation/trenching activities. Follow procedures in **Appendix F**. 2. Use hot work permit and procedures in **Appendix H** when welding, cutting or torching. 3. Ensure air delivery piping system has been leak tested prior to operation. 4. Follow LO/TO procedures using form in Appendix C during maintenance operations.

Potential Hazard	Control
Drum Excavation/ Handling/ Staging (Not anticipated)	1. Assess scope of work to determine field personnel capabilities. Utilize subcontractors who specialize in unknown drum excavation when in doubt. 2. Initial activities for unearthing buried drums must be conducted in Level B PPE. Downgrade in PPE based on air monitoring results and or site assessment conditions. 3. Do not approach or disturb bulging drums - allow heavy equipment to handle. 4. Enter excavated area <u>only</u> after assessment by competent person and/or approval by SHSO. 5. Follow safe lifting guidelines and use mechanical aids when lifting/moving drums. 6. Review JSA listed in **Appendix J**.
Compressed Gas Cylinder Excavation/ Handling/ Staging (Not anticipated)	1. Assess scope of work to determine field personnel capabilities. Utilize subcontractors who specialize in compressed gas cylinder excavation/removal when in doubt. 2. Initial activities for unearthing buried compressed gas cylinders requires Level B PPE. Downgrade in PPE based on air monitoring results and or site assessment conditions. 3. Exhibit caution around compressed gas cylinders that are bent dented or severely corroded. 4. Leave area immediately if signs of gas release occurs such as hissing sounds or visible signs of gas release such as vapor clouds. 5. Use safe lifting techniques and mechanical equipment to move compressed gas cylinders.

Potential Hazard	Control
Noise	1. Wear hearing protection when equipment such as a drill rig, jackhammer, cut saw, air compressor, blower or other heavy equipment is operating on the site. 2. Wear hearing protection whenever you need to raise your voice above normal conversational speech due to a loud noise source; this much noise indicates the need for protection. 3. Hearing protection is required when measured sound pressure levels (SPL) exceed 85 dB(A) where employees stand or conduct work. 4. Conduct noise monitoring of suspected high noise operations at the beginning of the workday or start up of new operations to verify noise control/hearing protection requirements. 5. Refer to Section 3.2, Noise Monitoring for guidance.
Electric Shock	1. Maintain appropriate distance from overhead utilities; **20-foot minimum clearance from power lines required; 10-foot minimum clearance from shielded power lines.** 2. Use ground-fault circuit interrupters as required. 3. Perform LO/TO procedures (**Appendix C**). 4. Use three-pronged plugs and extension cords. 5. Contact your local underground utility-locating service. 6. Follow code requirements for electrical installations in hazardous locations.
Physical Injury	1. Wear hard hats and safety glasses when on-site. 2. Maintain visual contact with the equipment operator and wear orange safety vest when heavy equipment is used on-site. 3. Avoid loose-fitting clothing (driller and driller's helper). 4. Prevent slips, trips, and falls; keep work area uncluttered. 5. Keep your hands away from moving parts (i.e., augers). 6. Test the emergency shut-off switch on the drill rig daily.

Potential Hazard	Control
Back Injury	1. Use a mechanical lifting device or a lifting aid where appropriate. 2. If you must lift, plan the lift before doing it. 3. Check your route for clearance. 4. Bend at the knees and use leg muscles when lifting. 5. Use the buddy system when lifting heavy or awkward objects. 6. Do not twist or jerk your body while lifting.
Heat Stress	1. Increase water intake while working. 2. Minimize and/or avoid alcohol intake the night before working in heat stress situations. 3. Increase number of rest breaks and/or rotate workers in shorter work shifts; take breaks in shaded areas. 4. Watch for signs and symptoms of heat exhaustion and fatigue. 5. Plan work for early morning or evening during hot months. 6. Use ice vests when necessary. 7. Rest in cool, dry areas. 8. In the event of heat stroke, bring the victim to a cool environment and initiate first aid procedures. Refer to **Appendix I**.
Cold Stress	1. Take breaks in heated shelters when working in extremely cold temperatures. 2. Remove the outer layer of clothing and loosen other layers to promote evaporation of perspiration, upon entering the shelter. 3. Be aware of cold stress symptoms such as shivering, numbness in the extremities, and sluggishness. 4. Drink warm liquids to reduce the susceptibility to cold stress. Refer to **Appendix I**.
High Crime Areas	1. Be aware of surroundings. 2. Use the buddy system. 3. Request police detail when appropriate.

Potential Hazard	Control
Insects	1. Tuck pants into socks. 2. Wear long sleeves. 3. Use insect repellent. 4. Avoid contact by always looking ahead to where walking, standing, sitting, leaning, grabbing, lifting or reaching-in-to. 5. Check for signs of insect/spider bites, such as redness, swelling, and flu-like symptoms. 6. Use buddy system to check each other for signs of insect/spider bites. 7. Remove ticks immediately with fine tipped tweezers by grasping the tick as close to your skin as possible and gently pulling straight out. Do not squeeze the tick's body as this may inject fluids into you. Wash the bite area of skin and apply antiseptic.
Poisonous Plants (Such as Poison Ivy, Oak or Sumac)	1. Don't enter areas infested with poisonous plants. 2. Immediately wash any areas that come into contact with poisonous plants. 3. Protect exposed skin area with gloves and Tyvek® suits. 4. Be aware that the oil from the plant can be carried on boots, clothes and equipment. Always protect skin from contact. 5. If you have known or suspected allergies, carry an Epi-Pen at all times and notify co-workers that you are allergic.
Poisonous Snakes	1. Avoid walking in areas where snake may nest or hide. Always look ahead to where walking for signs of snakes. 2. Use extreme caution when moving or lifting objects which could be used by snakes as cover. 3. Never reach under or behind objects or into other areas where snakes may hide. 4. Wear sturdy leather boots.

Potential Hazard	Control
Ladders	1. Assess work areas for fall hazards. 2. Make sure ladder rungs are sturdy and free of cracks. 3. Use ladders with secure safety feet, inspect prior to using. 4. Pitch ladders at a 4:1 ratio. 5. Secure ladder at the top or have another person at the bottom to help stabilize it. 6. Do not use ladders for access to air stripper towers. 7. Use non-conductive ladders near electrical wires.
Fire Control	1. Smoke only in designated areas. 2. Keep flammable liquids in closed containers. 3. Keep site clean; avoid accumulating combustible debris such as paper. 4. Follow Hot Work Safety Procedures when welding or performing other activities requiring an open flame. 5. Isolate flammable and combustible materials from ignition sources. 6. Ensure fire safety integrity of equipment installations.
Static Electricity	1. Do not create static discharge in flammable atmospheres. 2. Electrically bond and ground pumps transfer vessels, tanks, drums, bailers and probes, when moving liquids. 3. Electrically bond and ground vacuum trucks and the tanks they are emptying. 4. Do not splash fill containers with flammable liquids.

Potential Hazard	Control
Drilling/Boring Operations (Not anticipated)	1. Driller and helper must be present during all active operations. 2. Driller helper and other site personnel must know location of emergency shut off switch. 3. Ensure jewelry is removed, loose clothing is buttoned and loose PPE is secured close to the body to avoid getting caught in moving parts. 4. Unauthorized personnel must be kept clear of drilling rig. 5. Area of drilling operation must be cordoned off/barricaded. 6. When hazardous conditions are deemed present, operation must be shut down. 7. Do not allow drillers to climb to mast while it is erected. 8. Pipe, drill rods, casing, augers, and similar drilling tools should be orderly stacked on racks or sills to prevent spreading, rolling or sliding. 9. Work areas, platforms, and walkways should be kept free of materials, debris, and obstructions such as ice, grease or oil that could cause a surface to become slick or otherwise hazardous. 10. Shut down drill rig to make repairs or adjustments to drill rig or to lubricate fittings. Release all pressure on the hydraulic systems, the drilling fluid system, and the air pressure systems of the drill rig prior to performing maintenance. 11. For start-up, all gear boxes must be in neutral, all hoist levels are disengaged, all hydraulic levers are in the correct non-actuating positions and the cathead rope is not on the cathead before starting a drill rig engine. 12. Do not drive the drill rig from hole to hole with the mast in the raised position. Before raising the mast, check for overhead obstructions. 13. If it is necessary to drill within an enclosed area, make certain that exhaust fumes are conducted out of the area. 14. Clean mud and grease from your boots before mounting a drill platform. Watch for slippery ground when dismounting from the platform. 15. Should the rope "grab" the cathead it could become tangled in the drum. Release the rope and sound an appropriate alarm for all personnel to rapidly back away and stay clear.

Potential Hazard	Control
Off-Road Movement of Drill Rig (Not anticipated)	1. Before moving a drill rig, walk the route of travel, inspecting for depressions, stumps, gullies, ruts, and similar obstacles. 2. Check the complete drive train of a carrier at last weekly. 3. Discharge all passengers before moving a drill rig on rough or hilly terrain. 4. Engage the front axle for 4x4, 6x6, etc. when traveling off highway on hilly terrain. 5. Use caution when traveling side-hill. 6. Cross obstacles such as logs and erosion channels or ditches squarely. 7. Use a spotter when lateral or overhead clearance is close. 8. After drill rig has been moved to a new spot, set the brake and/or locks. When grades are steep, block the wheels.
Reacting to Drill Rig Contacting Electricity (Not anticipated)	1. Under most circumstances, the operator and other personnel on the seat of the vehicle should remain seated and not leave the vehicle. Do not move or touch any part of the vehicle. 2. If it is determined that the drill rig should be vacated, then all personnel should jump clear as far as possible from the rig. Do not step off, and do not hang on to the vehicle when jumping clear. 3. If ON THE GROUND, STAY FAR AWAY FROM THE VEHICLE AND THE DRILL RIG, DO NOT LET OTHERS GET NEAR THE VEHICLE AND THE DRILL RIG AND SEEK ASSISTANCE FROM LOCAL EMERGENCY PERSONNEL. 4. When the victim is completely clear of the electrical source and is unconscious and a heart beat cannot be detected, begin CPR immediately.

Potential Hazard	Control
Reacting to Drill Rig Contacting Electricity (Not anticipated)	1. Under most circumstances, the operator and other personnel on the seat of the vehicle should remain seated and not leave the vehicle. Do not move or touch any part of the vehicle. 2. If it is determined that the drill rig should be vacated, then all personnel should jump clear as far as possible from the rig. Do not step off, and do not hang on to the vehicle when jumping clear. 3. If ON THE GROUND, STAY FAR AWAY FROM THE VEHICLE AND THE DRILL RIG, DO NOT LET OTHERS GET NEAR THE VEHICLE AND THE DRILL RIG AND SEEK ASSISTANCE FROM LOCAL EMERGENCY PERSONNEL. 4. When the victim is completely clear of the electrical source and is unconscious and a heart beat cannot be detected, begin CPR immediately.
Welding, Cutting, Brazing	1. Conduct fire safety evaluation. 2. Complete Hot Work Permit (**Appendix H**). 3. Ensure flammable materials are protected from hot work, sources of ignition. 4. Ensure fire watch/fire extinguisher is on standby by hot work location.

Potential Hazard	Control
Safety During Rotary and Core Drilling (Not anticipated)	1. Check water swivels and hoisting plugs for frozen bearings prior to use. 2. The capacities of hoist and sheaves should be checked against the anticipated weight to the drill rod string plus other expected hoisting loads. 3. Only the operator of the drill rig should brake or set a manual chuck so that rotation of the chuck will not occur prior to removing the wrench from the chuck. 4. Drill rods should not be braked during lowering into the hole with drill rod check jaws. 5. Do not lower drill rods into the hole using pipe wrenches. 6. Do not use your hands to catch a falling rod in the hole. 7. In the event of a plugged bit or other circulation problem, the high pressure in the piping and hose between the pump and the obstruction should be relieved or bled before braking the first tool joint. 8. Do not use your hands to clean drilling fluids from rods. 9. Secure the ends of drill rod sections for safe vertical storage or lay the rods down.
Well Installation, Well Development, Well Gauging, Well Bailing, Soil/Ground-water Sampling	1. Wear appropriate PPE to avoid skin, eye, and inhalation contact with contaminated groundwater and/or soil. 2. Stand upwind when conducting tasks and minimize possible inhalation exposure; especially when first opening monitoring wells. 3. Conduct air monitoring to determine level of respiratory protection. 4. Utilize engineering controls such as portable venturi air movers to draw away or blow away chemical vapors. 5. Monitor for carbon tetrachloride with detector tubes prior to beginning any new task and once every two hours if the action level in **Table 7** is exceeded.

Potential Hazard	Control
Rapid Response	1. Ensure emergency response activities have been completed prior to beginning rapid response field activities. 2. Conduct hazard assessment of project site and communicate findings through a "Daily Tailgate Safety Meeting" to all IT Corporation employees and subcontractors prior to beginning rapid response field activities. 3. Communicate applicable IT Corporation health and safety programs to other contractors on site that may be impacted and coordinate field activities with them.
Cleaning Equipment	1. Wear appropriate PPE to avoid skin and eye contact with isopropyl alcohol, alconox, or other cleaning materials. 2. Stand upwind to minimize any potential inhalation exposure. 3. Dispose of spent cleaning solutions and rinses accordingly.
First aid kit, blood borne pathogen kit, emergency eye wash/shower station, fire extinguisher and absorbent pads will be located on-site either in the decontamination zone, or in the IT Corporation company vehicle.	

3.0 AIR MONITORING AND NOISE MONITORING

3.1 Air Monitoring

Air monitoring must be performed on all sites in accordance with IT Corporation practices. Organic vapor and/or concentrations are monitored in the field with a FID or PID with an 11.7 eV lamp. Flammable vapor and/or gas are monitored with an oxygen/combustimeter (O_2/LEL) real-time instrument. Airborne dust/particulate concentrations are measured with a real-time aerosol monitor (using a scattered light photometric sensing cell) when there are visible signs of airborne dust. Specific real-time air monitors for carbon monoxide are used to monitor combustion engine exhaust. Detector tube grab sampling is conducted for carbon tetrachloride and trichloroethylene, when results of non-specific real-time monitor action levels are reached or when their presence is suspected. Both area and personal air monitoring readings are to be taken to characterize site activities. Air monitoring results must be documented on the Air Monitoring Form (**Appendix E**).

ATTENTION:

SITE PERSONNEL ASSIGNED RESPONSIBILITY TO CONDUCT AIR MONITORING MUST HAVE BEEN TRAINED IN AIR MONITORING EQUIPMENT OPERATION AND CALIBRATION PRIOR TO ITS USE.

Calibration and maintenance of air monitoring equipment must follow manufacture specifications. Recalibration and adjustment of air monitoring equipment must be completed when site conditions and equipment operation reveal the need. Record all air monitoring equipment calibration and adjustment information on form in **Appendix E**.

Air monitoring action levels (**Table 7**) have been developed by the IT Corporation HSM, to indicate the chemical concentrations in the breathing zone that require an upgrade in level of PPE. Action levels are typically set at either one-half the OSHA Permissible Exposure Limit (PEL), National Institute for Occupational Safety and Health (NIOSH) Recommended Exposure Limits (REL), or the American Conference of Governmental Industrial Hygienists (ACGIH) Threshold Limit Values (TLV). Rationale for establishing action levels is based upon the data available that characterizes contaminants of concern in soil or water. Calculation for estimating

action levels is then completed using the principles of Henry's Law (volatiles in water), fugacity (volatiles in soil), and proportionality (particulates in soil). When analytical data is not available, a qualitative assessment is conducted based on knowing the contaminants of concern and then setting action levels based on the compound(s) with the lowest OSHA PEL, NIOSH REL or ACGIH TLV, and following an air monitoring schedule that will minimize any potential for over exposure.

All workers on-site must have been properly fitted with PPE (i.e., respirators) and have been trained in their use (i.e., donning and doffing). Air monitoring measurements will be taken in the breathing zone of the worker most likely to have the highest exposure. Transient peaks will not automatically trigger action. Action will be taken when levels are consistently exceeded in a 5-minute period. Similarly, if chemical odors are detected that are a nuisance, bothersome, or irritating, an upgrade in respiratory protection can provide an extra level of comfort or protection when conducting site activities. Guidelines for frequency of air monitoring are presented in **Table 6.** Job tasks that require air monitoring, the applicable action levels that apply for those tasks, and the frequency of air monitoring are described in **Table 6** and **Table 7** respectively.

Engineering controls such as the venturi air mover (supplied by compressed air) to exhaust or dilute solvent vapors emanating from monitoring wells or when conducting intrusive activities can be utilized as a means to downgrade PPE requirements (Level B to C, Level C to D).

Table 6. Air Monitoring Frequency Guidelines

Conduct periodic monitoring when:

1. It is possible that an immediately dangerous to life or health (IDLH) condition or a flammable atmosphere has developed, or

2. There is an indication that exposures may have risen over established action levels, permissible exposure limits or published exposure levels since the last monitoring. Look for a possible rise in exposures associated with these situations:

   - **Change in site area** - work begins on a different section of the site.
   - **Change in contaminants** - handling contaminants other than those first identified.
   - **Visible signs of particulate exposure from intrusive activities such as drilling/boring and excavation.**
   - **Perceptible chemical odors or symptoms of exposure.**
   - **Change in on-site activity** - one operation ends and another begins.
   - **Handling leaking drums or containers**.
   - **Working with obvious liquid contamination** (e.g., a spill or lagoon).

Conduct air monitoring when the possibility of volatilization exists (such as with a new monitoring well or a well containing known product)

Table 7. Air Monitoring Action Levels

Instrument*	Function	Measurement	Action
FID or PID 11.7eV lamp) - Measures Total Organic Vapors			
Conduct air monitoring for volatile organic compounds during activities where contaminated media are present.		1 - 3 ppm	Level D/Modified Level D required. Check for carbon tetrachloride (CCl_4) with detector tubes. If CCl_4 >3 to 5 ppm, upgrade to Level C required.
		>3 - 25 ppm	Monitor for CCl_4 and trichloroethylene (TCE) with detector tubes. If CCl_4 > 5 ppm upgrade to Level B. If TCE >25 to 50 ppm upgrade to Level C required. If TCE > 50 ppm upgrade to Level B with HSR approval.
		>50 - 500 ppm	If TCE > 50 ppm upgrade to Level B with HSR approval. Coordinate with PM and HSR for guidance.
		>500 ppm	Stop work required. Leave work area, contact PM and HSR for guidance.
Dust/Particulate Monitor			
Conduct air monitoring for dust particulate when sustained (> 5 minute) levels of visible dust are generated and engineering controls such as wet methods are ineffective. Dust begins to be visible at approximately 10 mg/M^3.		0 - 2.5 mg/M^3	Level D required.
		2.5 - 50 mg/M^3	Upgrade to Level C.
		>50 mg/M^3	Stop work. Contact PM and HSR for guidance.

Instrument*	Function	Measurement	Action
Oxygen/Combustimeter (O_2/LEL) Measures oxygen level (O_2) and lower explosive limit (LEL)			
Conduct air monitoring for O_2/LEL when conditions exist where flammable vapors/gases and/or oxygen deficiency or enrichment can occur. A decreased O_2 reading of 0.1% (e.g., 20.9% to 20.8%) actually represents a change in the total air envelope of approximately 0.5% or 5,000 ppm. This represents little hazard if the displacing gas is inert; if the displacing gas is toxic/flammable/reactive, such a concentration represents a real hazard. Verify reasons for O_2 depletion by conducting air monitoring with instruments that can measure suspected contaminants (PID/FID) or that can confirm presence of contaminants (detector tubes or chemical specific real-time air monitors).		O_2 = 19.5 - 23.5 %	Acceptable
		O_2 >23.5 %	**Leave area immediately;** this atmosphere is extremely flammable. Notify PM or HSR for guidance.
		O_2 <19.5%	**Leave area immediately;** this atmosphere is oxygen deficient. Verify reasons for O_2 depletion with appropriate air monitoring instrumentation before work continues. Utilize appropriate engineering controls/PPE once atmospheric contaminants have been verified.
		LEL <10%	Acceptable conditions. Continue normal activity.
		LEL >10%	**Leave area immediately.** Contact PM or HSR for guidance on venting and other safety measures.
*Note: Instruments must be calibrated according to manufacturer's recommendations.			

Table 8. Hazard Summary

AIR MONITORING SUMMARY			
Job Task	Level PPE	Instrument	Frequency
Confined Space Entry	Modified Level D (See **Table 11**)	PID[1] or FID[2], O_2/LEL[3], DT[4], DM[5]	Start up of work, then 15 minutes to continuously based on sampling results and sample location. Continuously if action level is exceeded.
Monitoring Well Bailing/ Gauging/ Sampling	Modified Level D (See **Table 11**)	PID or FID, O_2/LEL, DT	Start up of work, then 15 minutes to continuously based on sampling results and sample location. Continuously if action level is exceeded.
Equipment O&M / Live Trouble-shooting	Modified Level D (See **Table 11**)	PID or FID, O_2/LEL, DT, DM	Start up of work, then 15 minutes to continuously based on sampling results and sample location. Continuously if action level is exceeded.
Groundwater & Surface Sampling	Modified Level D (See **Table 11**)	PID or FID, O_2/LEL, DT	Start up of work, then 15 minutes to continuously based on sampling results and sample location. Continuously if action level is exceeded.

[1] PID, Photoionization Detector
[2] FID, Flame Ionization Detector
[3] O_2/LEL, Oxygen Level and Combustible Gas Meter
[4] DT, Colorimetric Detector Tube
[5] DM, Dust/ Particulate Monitor

Note: "Start up of work at each new task location" means to monitor the air quality at each new operation on the site. The breathing zone is the area inside a 1-foot radius around the head.

3.2 Noise Monitoring

Noise monitoring must be performed in accordance with IT Corporation practices. Noise levels will be monitored during the initial site visit with the air stripper blower motor running. In addition, noise monitoring is to be performed when workers are exposed to other sources of noise such as generators, gas or diesel powered pumps, or when in the vicinity of drilling equipment. Noise levels are monitored in the field with either a Type I or Type II Sound Level Meter (SLM). Noise dosemeter readings can also be obtained to determine the percent (%) noise dose. Noise levels and % dose measured are then compared to limits listed in OSHA standard 29 CFR 1910.95, Hearing Conservation.

Action levels listed in **Table 9** will trigger upgrade in PPE to include appropriate bearing protectors (muffs or plugs) or initiate possible noise control engineering. When required on a continuing basis, noise monitoring equipment must be calibrated prior to use each shift and checked at the end of the shift to determine accuracy. Noise readings must be recorded on data form in **Appendix E**, Noise Monitoring Form.

Selection of hearing protection must match the employees needs and the ability to attenuate noise below 90dB(A). Each hearing protection device (muff or plugs) has a Noise Reduction Rating (NRR) assigned by the U.S. Environmental Protection Agency (EPA). To calculate the hearing protector's effectiveness use the following formula:

$$\text{Noise Reading dB(A)} - (\text{NRR} - 7\text{dB}) < 90\text{dB(A)}$$

Table 9. Noise Monitoring

Instrument	Measurement	Action
Type I or Type II SLM - Calibrate Before Use		
	>80 dB(A) → 85 dB(A)	Hearing protection recommended. Limit work duration to 8-hour shifts.
	>85 dB(A) → 90 dB(A)	Hearing protection required. Limit work duration to 8-hour shifts.
	>90 dB(A) → 115 dB(A)	Hearing protection required. Investigate use of engineering controls. Limit work duration to 8-hour shifts.
	> 115 dB(A)	Stop work. Contact HSR and PM.

4.0 CONFINED SPACE ENTRY PROCEDURES

In the event site work may require personnel to enter confined spaces, **no IT Corporation employee or subcontractor shall enter an area identified as a confined space without using the confined space entry (CSE) procedures described in Appendix G and the site-specific entry procedures presented in Appendix G.** The purpose of the CSE procedure is to protect employees from potentially hazardous environments and to facilitate immediate rescue in an emergency situation. A CSE Permit must be posted at the entrance to each confined space. Permit required confined spaces identified for this project include well vaults and underground holding tanks.

5.0 CHEMICAL HAZARD CONTROL

5.1 Chemical Handling Procedures

Personnel must practice the chemical-specific handling procedures outlined in the following section.

Table 10. Chemical Handling Procedures

Chemical	Description	Procedures
Acids and Bases Acids: including hydrochloric, nitric, and sulfuric acids Bases: including sodium hydroxide	Extremely corrosive materials with a variety of uses.	■ Wear gloves and eye-splash protection while using acid dispensed from a small dropper bottle during water sampling. ■ Wear a full-face, air-purifying respirator equipped with combination cartridges (organic vapor/acid gas) as well as Tyvek® coveralls and nitrile and/or nitrile butyl rubber (NBR) gloves for large volume applications. ■ Have an eye wash bottle or portable eye wash station on-site. ■ Cap all drums after dispensing chemicals. ■ Do not add anything into a virgin chemical drum, including unused product. ■ Avoid mixing strong acids and bases. Consult HSR for task-specific evaluation. If mixing is absolutely necessary, do it slowly. Avoid vapors or fumes that are generated. ■ When diluting acids, add the acid to water in small quantities and mix cautiously. ■ When diluting bases, add water to the base in small quantities and mix cautiously.
Activated Carbon (Not Anticipated)	Granular adsorbent medium used to remove residual hydrocarbons from water and/or air.	■ Use respiratory protection when activated carbon creates a dusty environment. ■ Contact HSR for task-specific evaluation.

5.2 PPE

Based upon the hazards that may be encountered during site activities, PPE as follows was selected. Only PPE that meets the following American National Standards Institute (ANSI) standards are to be worn.

- Eye protection - ANSI Z87.1-1989
- Head protection - ANSI Z89.1-1986
- Foot protection - ANSI Z41-1991

Employees must maintain proficiency in the use and care of PPE that is to be worn. Typically this is covered during formal and informal refresher training sessions presented by IT Corporation.

Level D is the minimum acceptable level of protection for this project site. Upgrade to Modified Level D occurs when the possibility of contact to the skin or work uniform can occur from contaminated media. Upgrade to Level C will occur when results of air monitoring reveals action levels have been exceeded. Upgrade to Level B occurs when results of air monitoring reveals action levels have been exceeded, and site personnel meet training requirements. Wear hearing protection when in areas where high noise levels are generated.

Table 11. PPE

Level	Requirements
Level D	■ Work uniform ■ Steel-toed boots ■ Approved safety glasses or goggles ■ Hard hat ■ Fluorescent vest, when vehicular traffic is on or adjacent to the site ■ Nitrile gloves for water sampling
Modified Level D	**One or more of the following:** ■ Chemical resistance (acid or solvent) boot covers ■ PE-coated Tyvek® suit, NBR outer and nitrile inner gloves if skin contact with contaminants is possible. ■ Hearing protection (muffs and/or plugs).
Level C	■ Level D and Modified Level D ■ Cooling vests and/or Thermal Protection ■ NIOSH approved full-face respirator with organic vapor/acid gas high efficiency particulate air-purifying (HEPA) cartridges.
Level B	■ Level D and Modified Level D ■ Cooling vests and/or Thermal Protection ■ NIOSH approved full face positive pressure demand supplied air respirator, either airline or self contained.
Prior to use, all equipment must be inspected to ensure proper working condition.	

5.3 Site-specific Respiratory Protection Program

Respiratory protective equipment will be NIOSH-approved and respirator use will conform to American National Standards Institute (ANSI) Z88.2 and OSHA 29 CFR 1910.134 requirements. This procedure complies with the requirements contained within 29 CFR 1910.134 and will be maintained in the SSHO's site office location.

All personnel (including visitors) performing on-site activities, and using a negative pressure tight-fitting air-purifying respirator must have at least successfully passed a qualitative respirator fit test and be medically certified to wear respiratory protection in accordance with OSHA 29 CFR 1910.134. Fit testing and any training related to respiratory protection for IT Corporation

personnel are documented on the Respiratory Training Completion Forms and are part of the employee's training file.

The appropriate PPE has been selected according to the site characterization and analysis, job tasks, site hazards, intended use and duration of potential employee exposures (See **Section 1.4**). It must be noted that engineering controls for volatile organic compounds is deemed infeasible based on the nature of the work and difficulty in maintaining effective controls on an on-going basis.

As part of the respiratory protection program, the following pre-site requirements must be met:

Pre-Site Requirements

- Only employees who have been trained to wear and maintain respirators properly will be allowed to use respiratory protection.
- Selection of respirators, as well as any decisions regarding upgrading or downgrading of respiratory protection, will be made by the HSM or his designee.
- Positive and negative pressure tests will be performed each time the respirator is donned.
- Only employees who have been fit tested within the last 12 months will be allowed to work in atmospheres where respirators are required.
- Respirator users will be instructed in the proper use and limitations of respirators.
- If an employee has difficulty in breathing during the fit test or during use, he will be evaluated medically to determine if he can wear a respirator safely while performing assigned tasks.
- No employee will be assigned to tasks requiring the use of respirators if, based upon the most recent examination, a physician determines that the health or safety of the employee will be impaired by respirator use.
- **Contact lenses may be worn while using a full face piece tight-fitting air purifying respirator.**
- **Air-supplied respirators will be assembled according to manufacturer's specifications. Hose length, couplings, valves, regulators, manifolds, and all accessories will meet ANSI and the manufacturer's requirements.**
- **Respirators will be cleaned and sanitized daily after use.**
- **Respirators will be stored in a convenient, clean, and sanitary location on site.**
- **Respirators will be inspected during cleaning. Worn or deteriorated parts will be replaced.**
- **Facial hair that might interfere with a good face-piece seal or proper operation of the respirator is prohibited.**

- The SSHO will review the respiratory protection program daily to ensure employees are properly wearing and maintaining their respirators and the respiratory protection is adequately protecting the employees.
- The HSM and the PM will evaluate the respiratory protection program monthly to ensure the continuing effectiveness.
- Respirators used for emergency response will be inspected weekly by the SSHO.

Training

As part of the respiratory training program, each employee is instructed in the following elements:

- Nature of the respiratory hazard on the work site and the appraisal of potential consequences if the respiratory protection is not utilized.
- Use and proper fitting of respirator
- Cleaning, disinfecting, inspection, maintenance, and storage of the respirator
- Proper selection, capabilities, and their limitations

Each employee is given a respiratory protection training handout.

For Level B operations, on-site advanced respiratory protection training is required. Contact the PM or HSR to coordinate training.

Change-out Schedule

Level C protection may be required for protection against low levels of volatile halogenated hydrocarbons. Respirator cartridges to be used will be MSA GMA-C cartridges or equivalent. Level C protection may be used when concentrations exceed one-half the PEL to the PEL. If the PEL is exceeded, an upgrade in PPE to Level B is required by NIOSH recommendation. These will be changed out in accordance with the following change-out schedule:

The change-out schedule will be daily up to 8 hours unless the PEL is found to be exceeded by monitoring. The cartridge selection is based on protection against the low concentrations (below PEL) of volatile halogenated hydrocarbons and particulate. It is predicted that the respirator cartridge may approach its "End-of-Service Life" after 8 hours of work activity at concentrations exceeding the PEL at a high relative humidity.

These contaminants of concern have poor warning properties and fortunately personnel will be working in an outdoor environment. If any employee experiences increased breathing

resistance or leakage of the respirator, work will stop and the level of protection will be re-evaluated.

For any use of respiratory protection, the field checklist provided in **Appendix N** will be completed for each person using respiratory protection prior to site activities. The checklist will also be completed on a daily basis for daily tasks that are required. See **Appendix N** for further Respiratory Protection Program requirements.

5.4 Site Control: Work Zones

Work zones will be established in order to:

- Delineate high-traffic locations,
- Identify hazardous locations, and
- Contain contamination within the smallest area possible.

Employees entering the work zone must wear the proper PPE for that area. Work and support zones will be established based on ambient air monitoring data, necessary security measures, and site-specific conditions. Work zones will be identified as either Hot Zone (HZ)/Exclusion Zone (EZ); Decontamination Zone (DZ)/Contamination Reduction Zone (CRZ); or Clean Zone (CZ)/Support Zone (SZ).

The following PPE requirements apply for Work Zones:

- HZs/EZs requires Level B, C, or D PPE, depending on contaminant levels.
- DZs/CRZs require Level C, or D PPE, depending on contaminant levels.
- SZs/CZs require Level D PPE .

Specific work zones for this project have been identified and shown on the site map in **Appendix I**.

Listed are general guidelines for delineation of work zones. CRZs will be developed for decontamination procedures listed in **Section 4.5**.

1. The HZ/EZ is identified to contain contaminated soils or air contaminants that require PPE upgrades from Level D. A minimum ten-foot distance surrounding this area will be demarcated with cones, barricades and/or caution tape depending on location to employees, general public, and high traffic areas.

2. The DZ/CRZ will be established in various locations as warranted by the type of work activity performed and can include the back-end of the company pick-up truck. The DZ/CRZ will be demarcated at its boundaries with barricades, cones, and/or caution tape depending on location to employees, general public, and high traffic areas.

3. Support areas are the areas away from the contaminated areas or decontamination facility and are considered to be a clean area of the site.

Table 12. Site Security and Work Zone Definition

WORKING IN STREET OR ROADWAY
■ Wear traffic vest and hardhat when vehicle hazard exists. ■ Use cones, flag-mounted cones, caution tape and/or barricades. ■ Use vehicle strobe light and block area with truck. ■ Develop traffic patternization plan for high traffic situations: • use flag person, • use flashing arrow sign, • use "MEN WORKING" signs liberally, • obtain lane closing permits, and • engage police details.
WORKING AT EXCAVATION/TRENCHING SITES
■ "Competent person" is required per OSHA 29 CFR 1926 Subpart P. ■ Safetyguard open excavations by restricting unauthorized access. ■ Highlight work area using prominent warning signs (cones, saw horses/barricades and signage) placed a minimum of 10' back from excavation opening. ■ Maintain zone definition along perimeter with **continuous string** of yellow orange caution tape.

EXCAVATIONS LEFT UNATTENDED OR OVERNIGHT

Use one of the following methods to address these situations:

- Surround entire perimeter with plastic or cloth construction net fencing. Anchor fence to ground using steel posts driven into ground. Space out posts no greater than 8 feet apart. Fence height minimum 4-feet high. Fence material must be of a quality capable of withstanding a pressure of 200 pounds. Place fence a minimum of 10 feet back from excavation opening.
- Place 8-foot long barricades affixed with flashing lights end to end with 4-foot high construction net fence attached to barricades.
- Utilize temporary curbing or concrete "jersey" barriers affixed with flashing signal lights or other effective warning signs.

5.5 Decontamination Procedures

Operations conducted at this site have the potential to contaminate field equipment and PPE. To prevent the transfer of contamination to vehicles, administrative offices and personnel, the procedures presented in **Table 13** must be followed. Specific decontamination requirements will be followed by utilizing the equipment for that purpose. Work uniforms and Level D PPE must not be brought to employee residences and left either on-site, at the office location, or in the company vehicle. Laundering of company uniforms must be by IT Corporation approved laundering services and not done at employees residence.

Table 13. Decontamination Procedures

Item	Examples	Procedure
Field equipment	Bailers, interface probes, hand tools, drill augers, and miscellaneous sampling equipment	■ Decontaminate with a solution of detergent and water; rinse with water prior to leaving the site. ■ Protect from exposure by covering with disposable covers such as plastic to minimize required decontamination activities.
Disposable PPE	Tyvek® suits, inner latex gloves, respirator cartridges	■ Dispose of according to the requirements of the client and state and federal agencies. ■ Change out respirator cartridges on a daily basis and dispose accordingly.

Nondisposable PPE	Respirators	■ Wipe out respirator with disinfecting pad prior to donning. ■ Decontaminate respirator on-site at the close of each day based upon extent of contamination. This procedure could include disassembling the respirator and cleaning, rinsing, sanitizing, and drying all parts with approved powders and solutions.
	Boots and gloves	■ Decontaminate outside with a solution of detergent and water; rinse with water prior to leaving the site. ■ Protect from exposure by covering with disposable covers such as plastic to minimize required decontamination activities.

All water used in decontamination procedures should be stored in portable storage tanks until sufficient amount are stockpiled to facilitate disposal treatment. Disposable sampling and PPE will be place in plastic bags and temporarily stored in designated drums. These drums shall be disposed of according to regulatory guidelines, if necessary.

5.6 Example Decontamination Diagram

If Level C or Level B PPE is required, a CRZ will be constructed in a centralized common area with a travel path from the EZ demarcated with four-foot high cones. The decontamination procedure for this project site is a two stage process.

STAGE 1
- Gross contamination removal with a brush.
- Remove outer boots and dispose in a drum.
- Remove Tyvek® suit and dispose in a drum.
- Remove outer gloves and dispose in a drum.
- Walk to Stage 2.

STAGE 2
- Remove respirator.
- Remove cartridge and dispose in a drum.
- Clean respirator and insert into a bag.
- Remove inner gloves and dispose.

- Wipe hands with a toilette and dispose.
- Walk out of decontamination area.

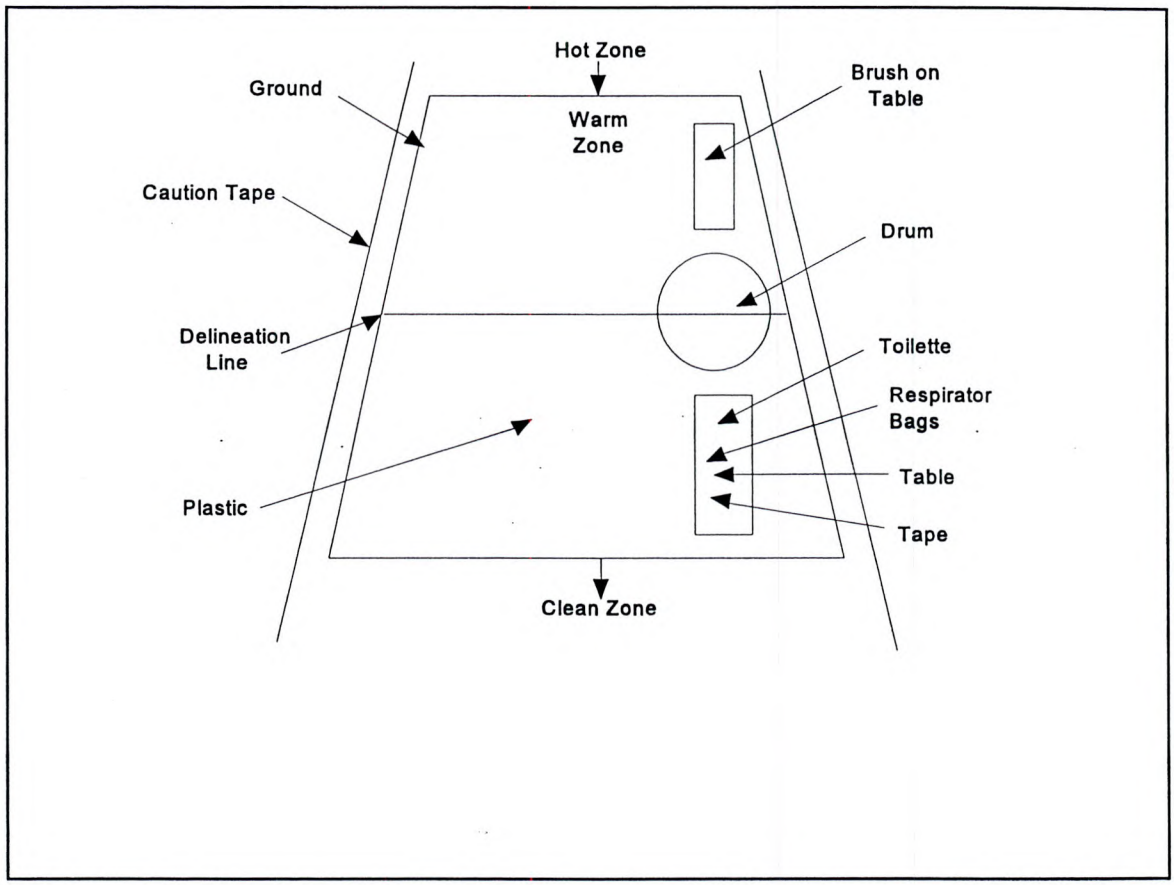

6.0 CONTINGENCY PLANS

Table 14 presents contingency plans for potential emergency situations. Ensure that the information in the contingency plans have been clearly communicated to all project personnel and those within the vicinity that may be affected, such as plant personnel and other contractors on site.

Table 14. Contingency Plans for Site Emergencies

Situation	Action
Evacuation	1. Immediately notify all on-site personnel of an emergency requiring evacuation. 2. Leave the dangerous area and report to a designated rally point. 3. Notify emergency medical service (EMS), as appropriate. 4. Account for all personnel. 5. Contact the PM and the HSR as soon as possible. 6. Maintain site security and control measures for community safety until emergency responders arrive.
Medical Emergency	1. Survey the situation: **Do not enter an area that may jeopardize your safety.** ■ Establish the patient's level of consciousness. ■ Call for help. ■ Contact EMS and inform them of patient's condition. 2. Primary assessment (patient unconscious) ■ Arousal ■ Airway ■ Breathing ■ Circulation **Only trained personnel should perform CPR or First Aid - State you are medically trained**

Situation	Action
Medical Emergency (continued)	3. Secondary assessment (patient conscious) ■ Check for bleeding: Control with direct pressure. ■ Do not move patient (unless location is not secure). ■ Monitor vital signs. ■ Provide First Aid to the level of your training. ■ Contact the PM and HSR as soon as possible. ■ Document the incident on IT Corporation's IR form.
Fire Emergency	1. **Evacuate the area.** 2. Notify the EMS. 3. Extinguish small fires with an all-purpose extinguisher. 4. Contact the PM and HSR. 5. Document the incident using the IR form.
Spill/ Release	Prevent problems by documenting the location of underground lines (e.g., product, sewer, telephone) before starting site work. If you drill through a line or tank or another leak occurs, document the spill/release in writing. Include dates, times, actions taken, agreements reached and names of people involved. In the event of a spill/release, follow this plan. 1. Wear appropriate PPE; stay upwind of the spill/release. 2. Turn off equipment and other sources of ignition. 3. Turn off pumps and shut valves to stop the flow/leak. 4. Plug the leak or collect drippings in a bucket, when possible. 5. Place sorbent pads to collect product, if possible. 6. Call Fire Department immediately if fire emergency develops. 7. Inform IT Corporation PM about the situation. 8. Determine if the client wants to repair the damage of if the client will use an emergency repair contractor. 9. Based on agreements, contact emergency spill contractor for containment of free product.

Situation	Action
Spill/ Release (continued)	10. Advise the client of spill discharge notification requirements and determine who will complete and submit forms. Do not submit or report to agencies without the client's consent. Document each interaction with the client and regulators and note, in writing; name, title authorizations, refusals, decisions, and commitments to actions. 11. Do not transport or approve transportation of contaminated soils or product until proper manifests have been completed and approve. Be aware that soils/product may meet criteria for hazardous waste. 12. Do not sign manifests as generator of wastes; contact the regional compliance manager to discuss waste transportation.

Notifications - ***a spill/release requires completion of a IR form.***

The PM must contact the client or generator. The generator is under obligation to report to the proper government agencies. If the spill extends into waterways, the Coast Guard and the National Response Center ([800] 424-8802) must be notified immediately by the client or with their permission.

6.1 Field Communications

Communications at the work site can be accomplished by verbal and/or non-verbal means to ensure contact with all IT Corporation and subcontractors. Verbal communication can be impacted by the on-site background noise and while wearing respiratory protection. **Table 15** lists the type of communication methods and equipment to use, depending on site conditions. Communication equipment must be checked daily to ensure proper operation and all project personnel must be initially briefed on the communication methods prior to starting work and reviewed in Daily Safety Tailgate Meetings as a reminder.

Table 15. Field Communication Methods

COMMUNICATION DEVICE	TYPE OF COMMUNICATIONS	SIGNAL
Telephone On-Site or Cellular Telephone	Emergency notification	Initiate phone call using applicable emergency numbers
Two-Way Radio	Emergency notification among site personnel	Initiate radio communication with Code Red message
Compressed Air Horn	Hailing site personnel for non-emergency	One long blast, one short blast
Compressed Air Horn	Hailing site personnel for emergency evacuation	Three long continuous blasts
Visual	Hailing site personnel for distress, need help	Arms waved in circle overhead
Visual	Hailing site personnel for emergency evacuation	Arms waved in criss-cross over head
Visual	Contaminated air/strong odor	Hands clutching throat
Visual	Break, lunch, end of day	Two hands together, break apart

7.0 MEDICAL MONITORING PROGRAM

IT Corporation under the oversight of the company's consulting physician, has developed a medical monitoring program to track the physical conditions of it's employees on a routine basis; starting with a baseline assessment, then periodic follow-up (annual or biennial) or specific project requirements based upon site contaminants or as assessment tool to aid in determining possible exposure.

7.1 Medical/Technical Advisors

Elayne Theriault, MD IT Corporation, Consulting Physician	(800) 229-3674 x 326
John Reinemann, CIH IT Corporation, Albany, NY	(518) 783-1996
Clifford Florczak, CSP, CIH IT Corporation, Chicago, IL	(312) 499-3508

The specific duties of the medical/technical advisors include:

- recommending a suitable medical monitoring program for the site workers by the occupational health physician in conjunction with consultation of the above listed personnel,
- providing interpretation of medical monitoring requirements and technical guidance for developing project specific medical monitoring requirements, and
- advising worker exposure potential along with appropriate hazard reduction methods.

Table 16. Medical Monitoring Program

Module	Hst. Phys. W/Dipstick UA, Vision, Vital Signs	Spiro	Audio	EKG	Chest X-Ray	Bio Chem W/Diff	Substance Abuse Screen	Random Substance Abuse	Tetanus Diphtheria
BASELINE									
Regular	•	•	•	■	•	•	NL/BP		(10Y)
Regular/DOT	•	•	•	■	•	•	N/BP		(10Y)
ANNUAL/PERIODIC									
Regular	•	•	•	■	5Y	•	NL/BP	RT/RBP	(10Y)
Regular/DOT	•	•	•	■	5Y	•	N/BP	RT/RN/RB	(10Y)
BIENNIAL									
Regular	•	•	•	■	5Y	•	NL/BP	RT/RBP	(10Y)

■ >40 years of age or for medial indications (pre-approved by EMR)
X-ray film sent to EMR for International Labor Organization (ILO) reading
1Y - 5Y Yearly frequency
( ) If not done within
TP IT Corporation ten panel drug screen
BP Breath pipe
N National Institution of Drug Abuse (NIDA) drug screen
NL NIDA-like drug screen
RT Random ten panel drug screen
RBP Random breath pipe
RB Random breathalyser

An EKG is required on a baseline exam. Thereafter, an EKG is performed annually for anyone over 40 years of age or for medical indications. A chest x-ray is required on a baseline exam, and then once every 5 years thereafter. A chest x-ray is also required upon termination (if it has been more than 1 year since the previous x-ray). Random drug screens and tetanus are variable components; therefore, they are not included in the total examination.

APPENDIX A

AGREEMENT AND ACKNOWLEDGEMENT FORM
HASP AMENDMENT SHEET
VISITOR/TRAINEE GUIDELINES
TRAINEE/OBSERVER AGREEMENT FORM

AGREEMENT AND ACKNOWLEDGEMENT SHEET

IT Corporation personnel have the authority to stop field activities at this site if any activity is not performed in accordance with the requirements of the HASP. All IT Corporation project personnel, subcontractor personnel, and visitors are required to sign the Agreement and Acknowledgement Sheet **prior** to conducting field activities at this site.

IT CORPORATION
AGREEMENT AND ACKNOWLEDGEMENT STATEMENT

1. **I have read and fully understand the HASP and my responsibilities.**
2. **I agree to abide by the provisions of the HASP.**

Name	Signature
Company	Date
Name	Signature
Company	Date
Name	Signature
Company	Date
Name	Signature
Company	Date
Name	Signature
Company	Date
Name	Signature
Company	Date
Name	Signature
Company	Date

IT CORPORATION

Project Name:

Project Number:

PM:

Location:

Changes in field activities or hazards:

Approved by:_____ _____
Project Manager Date

VISITOR/TRAINEE GUIDELINES

IT Corporation is committed to providing a safe environment on all work sites for visitors, trainees, employees and/or passersby. In order to accomplish this, the following guidelines must be followed. **Infractions of the listed requirements agreement will be viewed as extremely serious and will be subject to discipline up to and including termination for either the trainee and/or supervisor.**

1. VISITORS

Any person not actively participating in the work at the site is regarded as a "visitor" and must follow IT Corporation's visitor/trainee guidelines while on-site. Visitors must be accompanied by a representative at all times.

Visitors will attend and sign-off on a site orientation. The orientation will cover specific areas that visitors will not be allowed to access during certain work activity. Visitors are required to wear appropriate PPE on-site. Required PPE for visitors include:

- closed toed shoes,
- hard hat,
- safety glasses with side shields, and
- other as required by SHSO (i.e., gloves, hearing protection, Tyvek® suit, etc.)

2. TRAINEES

Trainees are employees of IT Corporation who have not yet completed IT Corporation's required safety training program. New hires and in-house company transfers will be considered trainees until safety training requirements are met.

Trainees will be informed of restrictions by their supervisor and must abide by them on-site.

Trainees will be permitted to visit IT Corporation sites to obtain three days on the job (OJT) training as observers as long as the following conditions are met:

- Trainees are supervised at all times while on-site.
- Trainees do not perform work functions of any type while on-site unless under direct supervision.
- Trainees do not handle any equipment, tools and/or supplies while on-site unless under direct supervision.
- Trainees do not enter any hazardous or HZ or confined space areas while on-site unless under direct supervision.

Supervisors will be responsible for informing trainees of the above conditions and for ensuring that the conditions are met. Supervisors will also ensure that trainees will not be asked to violate the conditions listed above.

A Trainee/Observer Agreement Form must be signed by both the trainee and the supervisor and placed on file in the Regional Human Resources department.

TRAINEE/OBSERVER AGREEMENT FORM

The following section is to be filled out by trainee.

Agreement between:

_____ _____ and IT Corporation.

Name (print/type) SS#

Because we have your safety in mind, you will be considered a trainee until all training criteria are met. This means you must complete all training requirements prior to performing work activities on-site.

Training requirements include:

> Up to date medical clearance documentation, successful completion and documentation or 40-hour HAZWOPER.
>
> Trainees also must attend an orientation of the HASP including specific training on hazards that there is a likelihood the worker would be exposed to.
>
> Prior to a trainee becoming a worker, the trainee must successfully complete three days of OJT. This three day OJT must be performed under direct supervision of a qualified supervisor.

I agree to adhere to the above conditions in all instances while on-site as a trainee/observer.

_____ _____

Signature Date

This section is to be filled out by supervisor.
As supervisor to the above trainee, I agree to the above restrictions and agree not to request him/her to perform activities contrary to those restrictions.

_____ _____

Signature Date

APPENDIX B

IT ACCIDENT REPORTING FORMS
ACCIDENT REVIEW BOARD FORMS
VEHICLE ACCIDENT REPORT FORMS

the group

Attachment 5
ACCIDENT/INJURY INVESTIGATION

*** MUST BE COMPLETED WITHIN 72 HOURS ***

Investigation Date _____ Date of Accident/Injury _____

Employee Name _____

Supervisor Name _____

Job Number/Name _____ / _____

Location of Accident/Injury _____

☐ Accident/Injury Classification

Injury	Vehicle	DOT
☐ Near Miss	☐ Chargeable	☐ DOT Vehicle
☐ First Aid	☐ Non-Chargeable	☐ DOT Reportable
☐ OSHA Recordable	☐ Not at Fault	
☐ Lost Workday		

General Liability ☐

☐ Description (Provide facts, describe how incident occurred, provide diagram (on back) or photos)

_____

_____

☐ Analysis 1 (What unsafe acts or conditions contributed to the incident?)

_____

_____

☐ Analysis 2 (What systematic or management deficiencies contributed to incident?)

_____

_____

☐ Corrective Action(s) (List corrective action items, responsible person, scheduled completion date)

_____

_____

☐ Witnesses (Attach statements or indicate why unavailable)

_____

_____

Investigated By _____ _____ _____
Print Name Signature Date

Manager _____ _____ _____
Print Name Signature Date

HS020.5/1-15-06

(Attach Additional pages if needed)

he igroup

Attachment 6
ACCIDENT REVIEW BOARD

E:	LOCATION:

ARD MEMBERS:

CIDENT DATE:	INJURED EMPLOYEES:
ESTIGATION COMPLETE: YES ☐ NO ☐	ACCIDENT TYPE:

THE FOLLOWING INFORMATION MUST BE PROVIDED BY THE REVIEW BOARD FOR THIS INCIDENT (PRINT):

ERVISOR:_____ SITE SAFETY OFFICER_____

OJECT MGR:_____

SE OF ACCIDENT:

TIO BY BOARD* :

ACTIONS BY THE ACCIDENT REVIEW BOARD ARE SUBJECT TO FINAL REVIEW BY THE HUMAN RESOURCES AND LEGAL DEPARTMENTS.

CEPTED:

EMPLOYEE SIGNATURE | MANAGER SIGNATURE

ROVED: | REJECTED FOR:

HS MANAGER

ROVED: | REJECTED FOR:

LOATION/AREA MANAGER

ROVED: | REJECTED FOR:

BUSINESS UNIT VICE PRESIDENT

VEHICLE ACCIDENT REPORT

ACCIDENT DESCRIPTION

ACCIDENT DATE_____ TIME_____ A.M. or P.M.

LOCATION (CITY,STATE)_____

DESCRIPTION OF ACCIDENT_____

_____

_____

WITNESS_____ PHONE # (_____)_____

ADDRESS_____ CITY_____ STATE_____ ZIP_____

POLICE OFFICER'S NAME_____ DEPARTMENT_____

IT VEHICLE

DRIVER_____ DRIVERS LICENSE_____ STATE_____

ADDRESS_____ CITY_____ STATE_____ ZIP_____

WORK PHONE #(_____)_____ SS#_____ PROJECT NAME/#_____

VEHICLE #_____ YEAR_____ MAKE_____ MODEL_____ LICENSE PLATE #_____

STATE_____ VEHICLE OWNER: ☐ IT CORP. ☐ LEASED/RENTED ☐ PRIVATE VEHICLE

VEHICLE TYPE: ☐ COMMERCIAL MOTOR VEHICLE ☐ NON-COMMERCIAL

IF NOT OWNED: OWNER_____ PHONE (_____)_____

ADDRESS_____ CITY_____ STATE_____ ZIP_____

VEHICLE DAMAGE_____

OF VEHICLES TOWED FROM SCENE_____ NUMBER OF INJURIES_____ NUMBER OF FATALITIES_____

WERE HAZARDOUS MATERIALS RELEASED? ☐ YES ☐ NO IF YES, DESCRIBE MATERIALS_____

_____

OTHER VEHICLE

DRIVER_____ DRIVERS LICENSE_____ STATE_____

ADDRESS_____ CITY_____ STATE_____ ZIP_____

PHONE #(_____)_____ SS#_____

OWNERS NAME (CHECK IF SAME AS DRIVER ☐)_____

ADDRESS_____ City_____ STATE_____ ZIP_____

INSURANCE COMPANY_____ POLICY #_____

AGENT'S NAME_____ PHONE # (_____)_____

ADDRESS_____ CITY_____ STATE_____ ZIP_____

VEHICLE: YEAR_____ MAKE_____ MODEL_____ PLATE #_____ STATE_____

VEHICLE I.D. #_____

VEHICLE DAMAGE_____

PASSENGERS: ☐ YES ☐ NO INJURIES: ☐ YES (List names & addresses below) ☐ NO

_____

_____

REPORT MUST BE CALLED IN OR FAXED TO:
CSSC/TRAVELERS (PHONE: 800-832-7839 * FAX: 800-842-8571)
AND HEALTH & SAFETY (PHONE: 412-372-7701 * FAX: 412-858-3976)
AND CORPORATE RISK MANAGEMENT (PHONE: 412-372-7701 * FAX: 412-373-7135)
WITHIN 24 HOURS, OR NOT LATER THAN NEXT BUSINESS DAY.

the group

VEHICLE ACCIDENT REPORT (continued)

WEATHER: ☐ Clear ☐ Cloudy ☐ Fog ☐ Rain ☐ Sleet ☐ Snow Other_____

PAVEMENT: ☐ Asphalt ☐ Steel ☐ Concrete ☐ Wood ☐ Gravel/Dirt ☐ Brick/Stone Other_____

CONDITION: ☐ Dry ☐ Wet ☐ Icy ☐ Pot Holes Other_____

TRAFFIC CONTROL: ☐ Traffic Light ☐ Stop Sign ☐ Railroad ☐ No Intersection ☐ No Control

ROADWAY: Number of Lanes Each Direction:_____ ☐ Residential ☐ Divided Highway ☐ Undivided Highway

Draw and name roadways showing each vehicle, direction of travel and point of impact. Indicate travel before the accident with a solid line and post-accident movement with a broken line.

SYMBOLS:

Your Vehicle ☐

Other Vehicle(s) ☐

☐

Pedestrian ☐

Stop Sign ☐

Yield ☐

Railroad ‡

ADDITIONAL INFORMATION: _____

WAS VEHICLE ACCIDENT REPORT SENT OR CALLED IN TO CSSC/TRAVELERS? ☐ YES

EMPLOYEE_____ (PRINT) _____ (SIGNATURE) _____ (DATE)

SUPERVISOR_____ (PRINT) _____ (SIGNATURE) _____ (DATE)

PROJECT MGR_____ (PRINT) _____ (SIGNATURE) _____ (DATE)

SITE SAFETY OFFICER_____ (PRINT) _____ (SIGNATURE) _____ (DATE)

REPORT MUST BE CALLED IN OR FAXED TO:
CSSC/TRAVELERS (PHONE: 800-832-7839 * FAX: 800-842-8571)
AND HEALTH & SAFETY (PHONE: 412-372-7701 * FAX: 412-858-3976)
AND CORPORATE RISK MANAGEMENT (PHONE: 412-372-7701 * FAX: 412-373-7135)
WITHIN 24 HOURS, OR NOT LATER THAN NEXT BUSINESS DAY.

APPENDIX C

LOCKOUT/TAGOUT PROCEDURES

This form is required to be completed when equipment (i.e. electrical, mechanical, pneumatic, chemical, thermal) that requires maintenance, which has stored energy, could be set in motion, thereby causing an injury. To complete the form:

- Identify all equipment (i.e. blower motor, recovery pump, etc);
- Describe the operation to be conducted (i.e. change fuse, change motor brushes, etc.)
- Describe the lockout method/location (i.e. circuit breaker panel outside remediation compound shed, using a single-pole, red plastic lockout clip)

SITE-SPECIFIC LO/TO PROCEDURES		
Equipment	**Operation**	**Lockout Method/Location**
Auto Dialer/PLC	Diagnosis/ troubleshooting	Unplug unit, disable battery backup, plug lockout for A/C connection
Air Stripper Blower	Repair/cleaning	Utilize local lockout location or lockout at main panel
Settling tank pump	Repair/cleaning	Unplug pump, plug lockout for A/C connection.
Recovery Pump #1	Repair, cleaning & maintenance	Lockout at main disconnect in building
Recovery Pump #1 Strip Heater	Maintenance	Lockout at main disconnect in building. Heaters also to be switched off for summer months.
Recovery Pump #2	Repair, cleaning & maintenance	Lockout at main disconnect in building
Recovery Pump #2 Strip Heater	Maintenance	Lockout at main disconnect in building. Heaters also to be switched off for summer months.

APPENDIX D

MSDS DEFINITIONS
MSDS

MSDS DEFINITIONS

(TLV-TWA)	***Threshold Limit Value - Time Weighted Average***. The time-weighted average concentration for a normal 8-hour work day and a 40-hour work week, to which nearly all workers may be repeatedly exposed without adverse effect.
(PEL)	Time-weighted average concentrations similar to (and in many cases derived from) the Threshold Limit Values.
(REL)	***Recommended Exposure Limit*** as defined by NIOSH similar to the Threshold Limit Values.
(IDLH)	***Immediately dangerous to life or health.*** Any atmospheric condition that poses an immediate threat to life, or which is likely to result in acute or immediate severe health effects. Oxygen deficiency is **IDLH**.
(LEL)	***Lower Explosive Limit.*** The minimum concentration of vapor in air below which propagation of a flame will not occur in the presence of an ignition source.
(UEL)	***Upper Explosive Limit.*** The maximum concentration of vapor in air above which propagation of a flame will not occur in the presence of an ignition source.
Flash Point (FP)	The lowest temperature at which the vapor of a combustible#liquid can be made to ignite momentarily in air.
Vapor Pressure (VP)	The pressure characteristic at any given temperature of a vapor in equilibrium with its liquid or solid form, often expressed in millimeters of mercury (mm Hg).
Odor Threshold	A property displayed by a particular compound. Low detection indicates a physiological sensation due to molecular contact with the olfactory nervous system (based on 50% of the population).
Ionization Potential (IP)	The amount of ionization characteristic a particular chemical compound displays.

MSDS

The following MSDS are for hazardous materials that will be encountered at this site. Contact your local HSR if you need additional information on these materials.

Genium Publishing Corporation
1145 Catalyn Street
Schenectady, NY 12303-1836 USA
(518) 377-8854

Material Safety Data Sheets Collection:

Sheet No. 5
Chromic Acid and Chromates

Issued: 10/77 Revision: C, 7/91 Errata: 12/94

Section 1. Material Identification

45

Chromic Acid (CrO_3) Description: Produced by roasting chromite ore with alkali or lime, leaching with calcium oxide, crystallizing the chromate or dichromate, and then treating it with an excess of sulfuric acid. Used in ceramic glazes, colored glass, dyes, batteries, explosives, water treatment, wood treatment and preservatives, refractories, copper stripping, aluminum anodizing, photomechanical processing, chromium metal plating, purifying oil and acetylene, hardening microscopic preparations, and manufacturing chromated copper arsenate; and as a corrosion inhibitor, a catalyst, an oxidizing agent in organic chemistry, and an etchant for plastics.

R	1
I	4
S	3*
K	0

* Percutaneous (broken skin)

NFPA: 0 / 3 / 1 / ox

HMIS
H 3
F 0
R 1
PPG†
† Sec. 8

Other Designations: CAS No. 1333-82-0; chromic acid; chromic acid, solid (DOT); chromium anhydride; chromium (VI) oxide; chromium trioxide; chromium (6+) trioxide; monochromium trioxide; puratronic chromium trioxide. Chromic acid is the commonly used name, although true chromic acid (CrH_2O_4, CAS No. 7738-94-5) cannot be isolated from solution. Chromic acid and chromates (as CrO_3, CAS No. 7440-47-3).

Manufacturer: Contact your supplier or distributor. Consult latest *Chemical Week Buyers' Guide*[73] for a suppliers list.

Caution: A powerful oxidizer, chromic acid may explode on contact with reducing agents and cause ignition on contact with organic materials. This poison and human carcinogen is corrosive to skin and irritating to mucous membranes. Eye contact may cause permanent blindness.

Section 2. Ingredients and Occupational Exposure Limits

Chromic acid, 99% CrO_3

1990 OSHA PEL
Ceiling: 0.1 mg(CrO_3)/m³

1987 IDLH Level
30 mg/m³

1990-91 ACGIH TLVs
TWA: 0.05 mg(Cr)/m³
Ceiling: 0.1 mg/m³

1990 NIOSH REL
TWA: 0.025 mg(Cr(VI))/m³
Ceiling: 0.05 mg/m³/15 min (Cr(VI))

1985-86 Toxicity Data*
Rat, oral, LD_{50}: 80 mg/kg
Mouse, oral, LD_{50}: 127 mg/kg
Human, inhalation, TC_{Lo}: exposed continuously to 110 µg over 3 years. Toxic effects include tumorigenic (carcinogenic by *RTECS* criteria); sense organs and special senses (olfaction tumors); lungs, thorax, or respiration (tumors).
Dog, subcutaneous, LD_{Lo}: 330 mg/kg

* See NIOSH, *RTECS* (GB6650000), for additional mutative, reproductive, toxicity and tumorigenic data.

Section 3. Physical Data*

Boiling Point: Decomposes at 482 °F (250 °C) to $Cr_2O_3 + O_2$
Melting Point: 385 °F (196 °C)
Molecular Weight: 99.98

Specific Gravity: 2.7
Water Solubility: Soluble
Heat of Fusion: 37.7 cal/g

Appearance and Odor: Dark, purplish-red, prismatic, deliquescent (absorbs all moisture from air) crystals, or a granular powder with no detectable odor.

* These physical data apply only to chromic acid (CAS No. 1333-82-0).

Section 4. Fire and Explosion Data

Flash Point:	Autoignition Temperature:	LEL:	UEL:
None reported	None reported	None reported	None reported

Extinguishing Media: Chromic acid is noncombustible, but accelerates burning of combustibles (wood, paper, oil). For small fires, *use only water*, not dry chemical, carbon dioxide (CO_2), or halon.

Unusual Fire or Explosion Hazards: A powerful oxidizer, chromic acid ignites on contact with acetic acid and alcohol. It may react rapidly enough with organic materials to cause ignition. Containers may explode if involved in fire.

Special Fire-fighting Procedures: Isolate hazard area and deny entry. Since fire may produce toxic fumes, wear a self-contained breathing apparatus (SCBA) with a full facepiece operated in pressure-demand or positive-pressure mode. Cool fire-exposed containers with flooding amounts of water since the decomposing material may form a hot, viscous foam that can cause containers to rupture and explode. *Use caution!* For large fires, flood area from a safe distance, and cool containers from the side with a water spray until after fire is well out. If possible without risk, move containers. Stay away from ends of tanks. For massive fire in cargo area, use monitor nozzles or unmanned hose holder. Be aware of runoff from fire control methods. Do not release to sewers or waterways.

Section 5. Reactivity Data

Stability/Polymerization: Chromic acid is generally stable at room temperature in closed containers under normal storage and handling conditions. Hazardous polymerization cannot occur.

Chemical Incompatibilities: This material is incompatible with acetic acid, acetic anhydride, acetone, alcohols, alkali metals, ammonia, arsenic, anthracene, benzene, bromine penta fluorine, butyric acid, camphor, chromous sulfide, diethyl ether, glycerol, hydrogen sulfide, methyl alcohol, naphthalene, peroxyformic acid, phosphorus, potassium hexacyanoferrate, pyridine, selenium, sodium, and turpentine. Chromic acid ignites ethyl alcohol and many hydrocarbons.

Conditions to Avoid: Avoid excess heat and contact with combustible or organic materials.

Hazardous Products of Decomposition: Thermal oxidative decomposition of chromic acid can produce carbon dioxide, smoke, and irritating toxic fumes.

Section 6. Health Hazard Data

Carcinogenicity: The IARC and NTP list chromic acid and other forms of hexavalent (VI) chromium as human carcinogens.

Summary of Risks: Chromic acid is a poison and a powerful irritant to skin, eyes, and respiratory tract. Skin or lung sensitization (allergic reactions) may occur. Exposure can cause dermatitis (skin rash), asthma, pulmonary edema (fluid in lungs), kidney damage, a "chrome hole," or a perforation of the nasal septum (tissue between nostrils).

Medical Conditions Aggravated by Long-Term Exposure: Any chronic lung or skin condition.

Target Organs: Skin, respiratory tract (including nose, throat, airways, and lungs), and kidney.

Primary Entry Routes: Eyes, skin contact, inhalation, and ingestion.

Acute Effects: Inhalation may cause irritation or burning of nose, throat, and air passages, cough, wheezing, and shortness of breath. Higher exposures may cause pulmonary edema (fluid in lungs). Skin exposure may cause dermatitis (skin rash), irritation, burning, itching, redness, and ulceration (skin destruction) which may penetrate. Eye contact can cause irritation, burning, lacrimation (watering), loss of sight and permanent blindness if not removed quickly.

Chronic Effects: Chronic inhalation of excessive levels may cause epistaxis (nosebleed), "chrome holes," nasal congestion, tooth enamel erosion, chest pain, asthma (via allergic sensitization), bronchitis, or respiratory tract cancer. Chronic eye exposure may cause conjunctivitis. Skin contact

Continue on next page

Copyright © 1991 Genium Publishing Corporation.
Any commercial use or reproduction without the publisher's permission is prohibited.

Section 6. Health Hazard Data, *continued*

can cause irritant or allergic contact dermatitis, or skin ulceration. Chronic systemic absorption could cause liver or kidney damage.

FIRST AID

Eyes: Gently lift the eyelids and flush immediately and continuously with flooding amounts of water until transported to an emergency medical facility. Do not let victim rub eyes or keep them tightly shut. Consult a physician immediately.

Skin: Rinse with flooding amounts of water for at least 15 min, and wash with a gentle soap. Promptly remove contaminated clothing. For redness, blistering, or persistent irritation, consult a physician.

Inhalation: Remove exposed person to fresh air and support breathing as needed.

Ingestion: Never give anything by mouth to an unconscious or convulsing person. If ingested, have that *conscious* person drink 1 to 2 glasses of water. *Do not induce vomiting* since this worsens the victim's condition. *Do not* neutralize this acid.

After first aid, get appropriate in-plant, paramedic, or community medical support.

Note to Physicians: After decontamination and neutralization, treatment of acid burns is similar to that of thermal burns, although bullae and loose necrotic tissue should be debrided. Update tetanus status. *For severe acid burns,* fluid resuscitation is critical to prevent mortality from hypovolemia and renal failure. Monitor serial vital signs, urine output, electrolytes, blood count, and urinalysis as clinically indicated. Neurovascular compromise distal to a circumferential extremity burn may require escharotomy or fasciotomy. *For inhalation exposures to acids,* a CXR, EKG, ABGs, PFTs, SMA, and CBC may aid in treatment. Evaluate and treat as indicated for reactive airways, upper airway obstruction and noncardiogenic pulmonary edema (possibly delayed onset). Although literature documentation is inadequate, a burst of steroids may help prevent development of sequelae such as reactive airways dysfunction syndrome or bronchilitis obliterans. For ocular exposures to acids, ensure adequate decontamination. Determination of pH may be helpful. A Morgan Lens© and topical anesthesia may aid in irrigation. Perform fluorescein staining and slit lamp evaluation and consult an opthamalogist. Antibiotic ointments, mydriatic/cycloplegics, topical corticosteroids (after epithelial recovery), patching, and possibly anterior chamber paracentesis may be indicated depending on clinical presentation. Acutely and in follow-up, evaluate as indicated for intraocular pressure, lacrimal and lid function, corneal integrity and infection. Urinary chromium is of questionable value.

Section 7. Spill, Leak, and Disposal Procedures

Spill/Leak: Notify safety personnel and evacuate all unnecessary personnel. Cleanup personnel should protect against dust inhalation and eye contact. Do not handle broken packages unless wearing appropriate personal protective equipment. Keep combustibles (wood, paper, etc.) away from spilled material. Whenever possible, use wet cleanup methods; if not, use vacuum cleanup. Remove spills immediately to prevent dust dispersion. For a water spill, neutralize with agricultural lime, crushed limestone, or sodium bicarbonate. For a land spill, dig a pit, pond, or lagoon to contain material. If time permits, seal these with an impermeable, flexible membrane liner. Dike surface flow with soil, sand or foamed concrete. Follow applicable OSHA regulations (29 CFR 1910.120).

Environmental Transport: If allowed contact with soil, chromic acid, solid, lowers pH and may leach into water sources, causing an effect similar to acid rain's on water sources. This material's carcinogenicity makes it hazardous to the environment in its hexavalent state.

Environmental Degradation: The recommended disposal means are reduction, precipitation, or ion exchange. Landfill disposal is not recommended since it raises soil acidity.

Disposal: Contact your supplier or a licensed contractor for detailed recommendations. Follow applicable Federal, state, and local regulations.

EPA Designations

Listed as a RCRA Hazardous Waste (40 CFR 261.22): Corrosive waste

RCRA Hazardous Waste (40 CFR 261.33): Not listed

Listed as a CERCLA Hazardous Substance* (40 CFR 302.4), Reportable Quantity (RQ): 10 lb (4.54 kg) [*per Clean Water Act, Sec. 311(b)(4)]†

SARA Extremely Hazardous Substance (40 CFR 355): Not listed

SARA Toxic Chemical (40 CFR 372.65): Not listed

OSHA Designations

Listed as an Air Contaminant (29 CFR 1910.1000, Tables Z-1-A and Z-2)

† Chromic acid (CAS No. 7738-94-5) is listed.

Section 8. Special Protection Data

Goggles: Wear protective eyeglasses or chemical safety goggles, per OSHA eye- and face-protection regulations (29 CFR 1910.133).

Respirator: Seek professional advice prior to respirator selection and use. Follow OSHA respirator regulations (29 CFR 1910.134) and, if necessary, wear a NIOSH-approved respirator. For 0.5 mg/m³ concentrations (if not fumes), use any dust and mist respirator except single-use and quarter-mask respirators. For 1.25 mg/m³ concentrations, use any powered air-purifying respirator with a high-efficiency particulate filter. For 2.5 mg/m³ concentrations, use any air-purifying full facepiece respirator with a high-efficiency particulate filter. For 30 mg/m³ concentrations, use any supplied air respirator with a full facepiece and operated in a pressure-demand or other positive-pressure mode. All concentrations may require eye protection. For emergency or nonroutine operations (cleaning spills, reactor vessels, or storage tanks), wear an SCBA. *Warning! Air-purifying respirators do not protect workers in oxygen-deficient atmospheres.*

Other: Wear impervious gloves, boots, aprons, and gauntlets to prevent skin contact.

Ventilation: Provide general and local ventilation systems to maintain airborne concentrations below occupational exposure levels. Local exhaust ventilation is preferred since it prevents contaminant dispersion into work area by controlling it at its source.[103]

Safety Stations: Make available in the work area emergency eyewash stations, safety/quick-drench showers, and washing facilities.

Contaminated Equipment: Contact lenses may minimize or worsen eye injuries. In some cases, soft lenses can actually protect eyes, not worsen corneal damage, due to strong chemicals. In other cases, chemical entrapment is presumed a possible hazard. Since contact lens use in industry is controversial, establish your own policy. Remove this material from your shoes and equipment. Launder contaminated clothing before wearing.

Comments: Never eat, drink, or smoke in work areas. Practice good personal hygiene after using this material, especially before eating, drinking, smoking, using the toilet, or applying cosmetics.

Section 9. Special Precautions and Comments

Storage Requirements: Store in glass bottles, cans, or drums. Protect against physical damage. Separate from combustible, organic, or other easily oxidizable materials. Protect from excess moisture which could cause containers to rust. Do not store on wooden floors. Store away from foodstuffs and flammable liquids and solids.

Engineering Controls: Avoid dust inhalation and skin or eye contact. Institute a respiratory protection program that includes regular training, maintenance, inspection, and evaluation. Practice good housekeeping procedures.

Other Precautions: Institute preplacement and periodic medical exams of exposed workers with attention to the skin and respiratory tract. Consider preplacement and periodic chest radiographs.

Transportation Data (49 CFR 172.101, .102)

DOT Shipping Name: Chromic acid, solid
DOT Hazard Class: Oxidizer
ID No.: NA1463
DOT Label: Oxidizer
DOT Packaging Exceptions: 173.153
DOT Packaging Requirements: 173.164

IMO Shipping Name: Chromium trioxide, anhydrous
IMO Hazard Class: 5.1
ID No.: UN1463
IMO Label: Oxidizer, Corrosive
IMDG Packaging Group: II

MSDS Collection References: 26, 38, 73, 85, 100, 101, 103, 124, 126, 127, 132, 133, 136, 138, 139, 140, 143, 142, 145, 148, 159

Prepared by: M Gannon, BA; **Industrial Hygiene Review:** DJ Wilson, CIH; **Medical Review:** MJ Upfal, MD, MPH; **Edited by:** JR Stuart, MS

Copyright © 1991 by Genium Publishing Corporation. Any commercial use or reproduction without the publisher's permission is prohibited. Judgments as to the suitability of information herein for the purchaser's purposes are necessarily the purchaser's responsibility. Although reasonable care has been taken in the preparation of such information, Genium Publishing Corporation extends no warranties, makes no representations, and assumes no responsibility as to the accuracy or suitability of such information for application to the purchaser's intended purpose or for consequences of its use.

Genium Publishing Corporation
1145 Catalyn Street
Schenectady, NY 12303-1836 USA
(518) 377-8854

Material Safety Data Sheets Collection:

Sheet No. 83
Chromium Metal/Powder

Issued: 3/81 Revision: A, 11/89

Section 1. Material Identification

30

Chromium Metal/Powder Description: Obtained from chrome ore, chromite ($FeCr_2O_4$), by electrolysis of chromium solutions, by direct reduction (ferrochrome), and by reducing the oxide with finely divided carbon or aluminum. Used for chromeplating other metals; for greatly increasing metal resistance and durability; in manufacturing chrome-steel or chrome-nickel-steel alloys (stainless steel); as a constituent of inorganic pigments; as protective coating for automotive and equipment accessories; and in nuclear and high-temperature research.
Other Designations: Chrome; Cr; CAS No. 7440-47-3.
Manufacturer: Contact your supplier or distributor. Consult the latest *Chemicalweek Buyers' Guide* (Genium ref. 73) for a suppliers list.

R 1
I 4
S 1
K 1

Genium

HMIS
H 2
F 1
R 1
PPG*
* Sec. 8

Section 2. Ingredients and Occupational Exposure Limits

Chromium metal/powder, ca 100%

OSHA PEL	ACGIH TLV, 1988-89*	NIOSH REL, 1987†	Toxicity Data‡
8-hr TWA: 1 mg/m³	TLV-TWA: 0.5 mg/m³	8-hr TWA (for chromium metal and insoluble salts): 1 mg Cr/m³	Rat, implant, TD_{Lo}: 1200 µg/kg body weight administered intermittently over six weeks

* This TLV is applicable to Cr^{+2} and Cr^{+3} compounds. For water soluble and water-insoluble Cr^{+6}, the 8-hr TWA is 0.05 mg Cr^{+6}/m³. Certain water-insoluble Cr^{+6} compounds (zinc chromate, calcium chromate, lead chromate, barium chromate, strontium chromate, and sintered chromium trioxide) are designated as A1a (human carcinogen).
† The NIOSH REL (10-hr TWA) for carcinogen Cr^{+6} compounds is 1 µg/m³; for noncarcinogenic Cr^{+6} compounds (including chromic acid), the RELs (10-hr TWAs) are 25 µg/m³ and 50 µg/m³ (15-min ceiling). The noncarcinogenic compounds include mono- and dichromates of hydrogen, cesium, sodium, lithium, potassium, rubidium, ammonia, and Cr^{+6} (chromic acid anhydride). Any and all Cr^{+6} materials excluded from the noncarcinogenic group above are carcinogenic Cr^{+6} compounds.
‡ See NIOSH, *RTECS* (GB4200000), for additional data with references to tumorigenic effects.

Section 3. Physical Data

Boiling Point: 4788 °F (2642 °C)
Melting Point: 3452 °F (1900 °C)
Vapor Pressure: 1 mm Hg at 2941 °F (1616 °C)
Vapor Density (Air = 1): 1.79
Atomic Weight: 51.996 g/mol
Specific Gravity (H_2O = 1 at 39 °F (4 °C)): 7.2 at 68 °F (20 °C)
Water Solubility: Insoluble

Appearance and Odor: Steel-gray, lustrous metal; no odor.

Section 4. Fire and Explosion Data

Flash Point: None reported	Autoignition Temperature: Cloud, 1076 °F (580 °C); dust layer, 752 °F (400 °C)	LEL: Dust cloud explosion, 0.230 oz/ft³	UEL: None reported

Extinguishing Media: Use dry chemical or sand.
Unusual Fire or Explosion Hazards: Particle size and dispersion in air determine reactivity. Chromium powder explodes spontaneously in air, while chromium dust suspended in CO_2 is ignitable and explosive when heated.
Special Fire-fighting Procedures: Wear a self-contained breathing apparatus (SCBA) with a full facepiece operated in the pressure-demand or positive-pressure mode.

*One hundred percent of dust goes through a 74-µm sieve. A 140-mJ spark can ignite a dust cloud.

Section 5. Reactivity Data

Stability/Polymerization: Chromium is stable when properly handled and stored. Hazardous polymerization cannot occur.
Chemical Incompatibilities: Chromium reacts readily with dilute, not nitric, acids to form chromous salts. It is soluble in acids (not nitric) and strong alkalis. Its powder is incompatible with strong oxidizing agents, including high O_2 concentration. Evaporation of mercury (Hg) from Cr amalgam leaves pyrophoric chromium. Finely divided Cr attains incandescence with nitrogen oxide, potassium chlorate, and sulfur dioxide. Molten lithium at 18 °C severely attacks Cr. Fused ammonium nitrate below 200 °C reacts explosively and may ignite or react violently with bromine pentafluoride.
Hazardous Products of Decomposition: Thermal oxidative decomposition of Cr can produce toxic chromium oxide fumes.

Copyright © 1989 Genium Publishing Corporation.
Any commercial use or reproduction without the publisher's permission is prohibited.

Section 6. Health Hazard Data

Carcinogenicity: The NTP and OSHA list chromium as a human carcinogen.

Summary of Risks: When ingested chromium is a human poison, with gastrointestinal (GI) effects. Chromium 3 (Cr^{+3}) compounds show little or no toxicity. Less soluble chromium 6 (Cr^{+6}) compounds are suspected carcinogens and severe irritants of the larynx, nasopharynx, lungs, and skin (Sec. 2). Chromic acid or chromate salts cause irritation of the skin and respiratory passage. Ingestion leads to severe irritation of the gastrointestinal tract, renal damage, and circulatory shock. Chromium metal (when heated to high temperatures) and insoluble salts are said to be involved in histological fibrosis of the lungs, which may progress to clinically evident pneumoconiosis. Exposure to chromate dust and powder can cause skin (dermatitis) and eye irritation (conjunctivitis).

Medical Conditions Aggravated by Long-Term Exposure: An incresed incidence of bronchogenic carcinoma occurs in workers exposed to chromate dust.

Target Organs: Respiratory system.

Primary Entry: Inhalation, percutaneous absorption, and ingestion.

Acute Effects: Acute exposures to dust may cause headache, coughing, shortness of breath, pneumoconiosis, fever, weight loss, nasal irritation, inflammation of the conjunctiva, and dermatitis.

Chronic Effects: Asthmatic bronchitis.

FIRST AID

Eyes: Flush immediately, including under the eyelids, gently but thoroughly with flooding amounts of running water for at least 15 min.

Skin: Brush off chromium dust. After rinsing affected area with flooding amounts of water, wash it with soap and water.

Inhalation: Remove exposed person to fresh air and support breathing as needed.

Ingestion: Never give anything by mouth to an unconscious or convulsing person. If ingested, have that conscious person slowly drink 1 to 2 glasses of water to dilute. Do not induce vomoting. A physician should evaluate all ingestion cases.

After first aid, get appropriate in-plant, paramedic, or community medical attention and support.

Physician's Note: Acute toxicity causes a two-phase insult: 1) multisystem shock due to gastrointestinal corrosivity and 2) hepatic, renal, hematopoetic insult. Treatment should use ascorbic acid as a neutralizer with gastric lavage. If the ingestion is substantial, exchange transfusions and/or consider hemodialysis. Treat allergic dermatitis with local cortisone or 10% ascorbic acid to reduce Cr^{+6} to Cr^{+3}. Ten percent EDTA in a lanolin base applied every 24 hr helps heal skin ulcers.

Section 7. Spill, Leak, and Disposal Procedures

Spill/Leak: Notify safety personnel of large spills. Cleanup personnel should wear protective clothing and approved respirators. Remove heat and ignition sources. Provide adequate ventilation. Keep airborne dust at a minimum. Remove spills quickly and place in appropriate containers for disposal or reuse.

Disposal: Reclaim salvageable metal. Contact your supplier or a licensed contractor for detailed recommendations. Follow applicable Federal, state and local regulations.

OSHA Designations

Listed as an Air Contaminant (29 CFR 1910.1000, Table Z-1)

EPA Designations

RCRA Hazardous Waste (40 CFR 261.33): Not listed

Listed as a CERCLA Hazardous Substance* (40 CFR 302.4), Reportable Quantity (RQ): 1 lb (0.454 kg) [* per Clean Water Act, Sec. 307(a)]

SARA Extremely Hazardous Substance (40 CFR 355): Not listed

Listed as a SARA Toxic Chemical (40 CFR 372.65)

Section 8. Special Protection Data

Goggles: Wear protective eyeglasses or chemical safety goggles, per OSHA eye- and face-protection regulations (29 CFR 1910.133).

Respirator: Wear a NIOSH-approved respirator if necessary. Wear an SCBA with a full facepiece when the particle concentration's upper limit is 10 mg/m³.

Warning: Air-purifying respirators do *not* protect workers in oxygen-deficient atmospheres.

Other: Wear impervious rubber gloves, boots, aprons, and gauntlets to prevent prolonged or repeated skin contact.

Ventilation: Provide general and local explosion-proof ventilation systems to maintain airborne concentrations below the OSHA standard (Sec. 2). Local exhaust ventilation is preferred since it prevents contaminant dispersion into the work area by eliminating it at its source (Genium ref. 103).

Safety Stations: Make available in the work area emergency eyewash stations, safety/quick-drench showers, and washing facilities.

Contaminated Equipment: Never wear contact lenses in the work area: soft lenses may absorb, and all lenses concentrate, irritants. Launder contaminated clothing before wearing. Remove this material from your shoes and equipment.

Comments: Never eat, drink, or smoke in work areas. Practice good personal hygiene after using this material, especially before eating, drinking, smoking, using the toilet, or applying cosmetics.

Section 9. Special Precautions and Comments

Storage Requirements: Store material in cool, dry, well-ventilated area separate from acids and oxidizing agents. Seal and protect containers from physical damage. Keep away from heat or ignition sources.

Engineering Controls: Avoid dust inhalation. Practice good housekeeping (vacuuming and wet sweeping) to minimize airborne particulates and prevent dust accumulation. Use nonsparking tools and ground electrical equipment and machinery.

Transportation Data (49 CFR 172.101, .102): Not listed

MSDS Collection **References:** 1, 2, 26, 38, 80, 87, 88, 89, 100, 109, 124, 126

Prepared by: MJ Allison, BS; **Industrial Hygiene Review:** DJ Wilson, CIH; **Medical Review:** MJ Hardies, MD MS

Copyright © 1989 by Genium Publishing Corporation. Any commercial use or reproduction without the publisher's permission is prohibited. Judgments as to the suitability of information herein for the purchaser's purposes are necessarily the purchaser's responsibility. Although reasonable care has been taken in the preparation of such information, Genium Publishing Corporation extends no warranties, makes no representations, and assumes no responsibility as to the accuracy or suitability of such information for application to the purchaser's intended purpose or for consequences of its use.

Genium Publishing Corporation
One Genium Plaza
Schenectady, NY 12304-4690 USA
(518) 377-8854

Material Safety Data Sheets Collection:

Sheet No. 312
Trichloroethylene

Issued: 7/79 Revision: F, 9/92

Section 1. Material Identification

Trichloroethylene (C_2HCl_3) Description: Derived by treating tetrachloroethane with lime or other alkali in the presence of water, or by thermal decomposition of tetrachloroethane followed by steam distillation. Stabilizers such as epichlorohydrin, isobutanol, carbon tetrachloride, chloroform, benzene, or pentanol-2-triethanolamine are then added. Used as a degreasing solvent in electronics and dry cleaning, a chemical intermediate, a refrigerant and heat-exchange liquid, and a diluent in paint and adhesives; in oil, fat, and wax extraction and in aerospace operations (flushing liquid oxygen). Formerly used as a fumigant (food) and anesthetic (replaced due to its hazardous decomposition in closed-circuit apparatus).

Other Designations: CAS No. 79-01-6; acetylene trichloride; Algylen; Anamenth; Benzinol; Cecolene; Chlorylen; Dow-Tri; ethylene trichloride; Germalgene; Narcogen; Triasol; ~~trichloroethene~~; TCE; 1,1,3-trichloroethylene.

Manufacturer: Contact your supplier or distributor. Consult latest *Chemical Week Buyers' Guide*[73] for a suppliers list.

R	1
I	2
S	2*
K	3

* Skin absorption

NFPA: 2 (top), 2 (left), 0 (right), - (bottom)

HMIS
H 2†
F 2
R 0
PPE‡
† Chronic Effects
‡ Sec. 8

Cautions: TCE is irritating and toxic to the central nervous system (CNS). Inhalation of high concentrations have lead to death due to ventricular fibrillation. Chronic exposure may lead to heart, liver, and kidney damage. The liquid is absorbed through the skin. Although it has a relatively low flash point, TCE burns with difficulty.

Section 2. Ingredients and Occupational Exposure Limits

Trichloroethylene, < 100% [contains stabilizers (Sec. 1)].

1991 OSHA PELs
8-hr TWA: 50 ppm (270 mg/m^3)
15-min STEL: 200 ppm (1080 mg/m^3)

1990 IDLH Level
1000 ppm

1990 NIOSH REL
10-hr TWA: 25 ppm (~135 mg/m^3)

1992-93 ACGIH TLVs
TWA: 50 ppm (269 mg/m^3)
STEL: 200 ppm (1070 mg/m^3)

1990 DFG (Germany) MAK
Ceiling: 50 ppm (270 mg/m^3)
Category II: Substances with systemic effects
Half-life: 2 hr to shift length
Peak Exposure Limit: 250 ppm, 30 min average value; 2 peaks/shift

1985-86 Toxicity Data*
Human, inhalation, TC_{Lo}: 160 ppm/83 min caused hallucinations and distorted perceptions.
Human, lymphocyte: 5 mL/L caused DNA inhibition.
Rabbit, skin: 500 mg/24 hr caused severe irritation.
Rabbit, eye: 20 mg/24 hr caused moderate irritation.
Mouse, oral, TD_{Lo}: 455 mg/kg administered intermittently for 78 weeks produced liver tumors.

* See NIOSH, *RTECS* (KX4550000), for additional irritation, mutation, reproductive, tumorigenic and toxicity data.

Section 3. Physical Data

Boiling Point: 189 °F (87 °C)
Freezing Point: -121 °F (-85 °C)
Viscosity: 0.0055 Poise at 77 °F (25 °C)
Molecular Weight: 131.38
Density: 1.4649 at 20/4 °C
Refraction Index: 1.477 at 68 °F (20 °C/D)
Odor Threshold: 82 to 108 ppm (*not an effective warning*)

Vapor Pressure: 58 mm Hg at 68 °F (20 °C); 100 mm Hg at 32 °F (0 °C)
Saturated Vapor Density (Air = 0.075 lbs/ft^3; 1.2 kg/m^3): 0.0956 lbs/ft^3; 1.53 kg/m^3
Water Solubility: Very slightly soluble; 0.1% at 77 °F (25 °C)
Other Solubilities: Highly soluble in organic solvents (alcohol, acetone, ether, carbon tetrachloride, & chloroform) and lipids.
Surface Tension: 29.3 dyne/cm

Appearance and Odor: Clear, colorless (sometimes dyed blue), mobile liquid with a sweet chloroform odor.

Section 4. Fire and Explosion Data

Flash Point: 90 °F (32 °C) CC	Autoignition Temperature: 788 °F (420 °C)	LEL: 8% (25 °C); 12.5% (100 °C)	UEL: 10% (25 °C); 90% (100 °C)

Extinguishing Media: A Class 1C Flammable Liquid. Although it has a flash point of 90 °F, TCE burns with difficulty. For small fires, use dry chemical, carbon dioxide, water spray, or regular foam. For large fires, use water spray, fog, or regular foam. **Unusual Fire or Explosion Hazards:** Vapor/air mixtures may explode when ignited. Container may explode in heat of fire. **Special Fire-fighting Procedures:** Because fire may produce toxic thermal decomposition products, wear a self-contained breathing apparatus (SCBA) with a full facepiece operated in pressure-demand or positive-pressure mode. Structural firefighters' protective clothing provides only limited protection against TCE. Apply cooling water to sides of container until well after fire is out. Stay away from ends of tanks. Do not release runoff from fire control methods to sewers or waterways.

Section 5. Reactivity Data

Stability/Polymerization: TCE slowly decomposes in the presence of light and moisture to form corrosive hydrochloric acid. Hazardous polymerization cannot occur. **Chemical Incompatibilities:** Include alkalis (sodium hydroxide), chemically active metals (aluminum, beryllium, lithium, magnesium, sodium, potassium, and titanium), epoxides, and oxidants (nitrogen tetraoxide, perchloric acid). Contact with 1-chloro-2,3-epoxy propane or the mono and di 2,3-epoxypropyl ethers of 1,4-butanediol + 2,2-bis-4(2',3'-epoxypropoxy)-phenylpropane can, in the presence of catalytic quantities of halide ions, cause dehydrochlorination of TCE to explosive dichloroacetylene. **Conditions to Avoid:** Exposure to light, moisture, ignition sources, and incompatibles. **Hazardous Products of Decomposition:** Thermal oxidative decomposition of TCE (above 300 °C) or exposure to ultraviolet light can produce carbon dioxide (CO_2) and toxic dichloro acetylene (explosive), chlorine, hydrogen chloride, and phosgene gas.

Section 6. Health Hazard Data

Carcinogenicity: The following agencies have rated TCE's carcinogenicity: IARC (Class 3, limited animal evidence & insufficient human data), Germany MAK (Class B, justifiably suspected of having carcinogenic potential), & NIOSH (Class X, carcinogen defined with no further categorization). **Summary of Risks:** TCE vapor is irritating to the eyes, nose, and respiratory tract and inhalation of high concentrations can lead to severe CNS effects such as unconsciousness, ventricular arrythmias, and death due to cardiac arrest. Mild liver dysfunction was also seen at levels high enough to produce CNS effects. Contact with the liquid is irritating to the skin and can lead to dermatitis by defatting the skin. Chronic toxicity is observed in the victims increasing intolerance to alcohol characterized by 'degreasers flush', a transient redness of the face, trunk, and arms. The euphoric effect of TCE has led to craving, and habitual sniffing of its vapors.

Continue on next page

Copyright © 1992 Genium Publishing Corporation. Any commercial use or reproduction without the publisher's permission is prohibited.

Section 6. Health Hazard Data, *Continued*

TCE crosses the placental barrier and thus exposes the fetus (any effects are yet unknown). There are increased reports of menstrual disorders in women workers and decreased libido in males at exposures high enough to cause CNS effects. TCE is eliminated unchanged in expired air and as metabolites (trichloroacetic acid & trichloroethanol) in blood and urine. **Medical Conditions Aggravated by Long-Term Exposure:** Disorders of nervous system, skin, heart, liver, and kidney. **Target Organs:** Respiratory, central & peripheral nervous, and cardiovascular (heart) systems, kidney, and skin. **Primary Entry Routes:** Inhalation, skin and eye contact, and ingestion (rarely). **Acute Effects:** Vapor inhalation can cause eye, nose, and throat irritation, nausea, blurred vision, overexcitement, headache, drunkenness, memory loss, irregular heartbeat (resulting in sudden death), unconsciousness, and death due to cardiac failure. Skin contact with the liquid can cause dryness and cracking and prolonged exposure (generally if the victim is unconscious) can cause blistering. Eye contact can cause irritation and watering, with corneal epithelium injury in some cases. Ingestion of the liquid can cause lip, mouth, and gastrointestinal irritation, irregular heartbeat, nausea and vomiting, diarrhea (possibly blood-stained), drowsiness, and risk of pulmonary edema (fluid in lungs). **Chronic Effects:** Effects may persist for several weeks or months after repeated exposure. Symptoms include giddiness, irritability, headache, digestive disturbances, mental confusion, intolerance to alcohol (degreasers flush), altered color perception, loss or impairment of sense of smell, double vision, and peripheral nervous system function impairment including persistent neuritis, temporary loss of sense of touch, and paralysis of the fingers from direct contact with TCE liquid.

FIRST AID **Eyes:** *Do not* allow victim to rub or keep eyes tightly shut. Gently lift eyelids and flush immediately and continuously with flooding amounts of water until transported to an emergency medical facility. Consult a physician immediately. **Skin:** *Quickly* remove contaminated clothing. Rinse with flooding amounts of water for at least 15 min. Wash exposed area with soap and water. **Inhalation:** Remove exposed person to fresh air and support breathing as needed. **Ingestion:** Never give anything by mouth to an unconscious or convulsing person. Contact a poison control center and unless otherwise advised, have that *conscious and alert* person drink 1 to 2 glasses of water, then induce vomiting. Do not give milk, as its fat content (TCE is lipid soluble) may inhance gastrointestinal absorption of TCE. **Note to Physicians:** TCE elimination seems to be triphasic with half lives at 20 min, 3 hr, and 30 hr. Some success is seen in treating patients with propranolol, atropine, and disulfiram. Monitor urine and blood (lethal level = 3 to 110 µg/mL) metabolites. BEI = 100 mg/g creatinine (trichloroacetic acid) in urine, *sample at end of workweek.* BEI = 4 mg/L (trichloroethanol) in blood, *sample at end of shift at end of the workweek.* These tests are not 100% accurate indicators of exposure; monitor TCE in expired air as a confirmatory test.

Section 7. Spill, Leak, and Disposal Procedures

Spill/Leak: Immediately notify safety personnel, isolate and ventilate area, deny entry, and stay upwind. Shut off all ignition sources. For small spills, take up with earth, sand, vermiculite, or other absorbent, noncombustible material and place in suitable container for later disposal. For large spills, flush to containment area where density stratification will form a bottom TCE layer which can be pumped and containerized. Report any release in excess of 1000 lbs. Follow applicable OSHA regulations (29 CFR 1910.120). **Ecotoxicity Values:** Bluegill sunfish, LC_{50} = 44,700 µg/L/96 hr; fathead minnow (*Pimephales promelas*), LC_{50} = 40.7 mg/L/96 hr. **Environmental Degradation:** In air, TCE is photooxidized with a half-life of 5 days and reported to form phosgene, dichloroacetyl chloride, and formyl chloride. In water it evaporates rapidly in minutes to hours. TCE rapidly evaporates and may leach since it does not absorb to sediment. **Soil Absorption/Mobility:** TCE has a Log K_{oc} of 2, indicating high soil mobility. **Disposal:** Waste TCE can be poured on dry sand and allowed to vaporize in isolated location, purified by distillation, or returned to supplier. A potential candidate for rotary kiln incineration at 1508 to 2912 °F (820 to 1600 °C) with an acid scrubber to remove halo acids. Contact your supplier or a licensed contractor for detailed recommendations. Follow applicable Federal, state, and local regulations.

EPA Designations
Extremely Hazardous Substance (40 CFR 355): Not listed
Listed as a SARA Toxic Chemical (40 CFR 372.65)
Listed as a RCRA Hazardous Waste (40 CFR 261.33 & 261.31): No. U228 & F002 (*spent solvent*)
Listed as a CERCLA Hazardous Substance* (40 CFR 302.4): Final Reportable Quantity (RQ), 100 lb (45.4 kg) [* per RCRA, Sec. 3001, CWA Sec. 311 (b)(4), & CWA Sec. 307 (a)]

OSHA Designations
Listed as an Air Contaminant (29 CFR 1910.1000, Table Z-1-A)

Section 8. Special Protection Data

Goggles: Wear chemical safety goggles (cup-type or rubber framed, equipped with impact-resistant glass), per OSHA eye- and face-protection regulations (29 CFR 1910.133). Because contact lens use in industry is controversial, establish your own policy. **Respirator:** Seek professional advice prior to respirator selection and use. Follow OSHA respirator regulations (29 CFR 1910.134) and, if necessary, wear a MSHA/NIOSH-approved respirator. At any detectable concentration, wear a SCBA with a full facepiece operated in pressure demand or other positive pressure mode. For emergency or nonroutine operations (cleaning spills, reactor vessels, or storage tanks), wear an SCBA. *Warning! Air-purifying respirators do not protect workers in oxygen-deficient atmospheres.* If respirators are used, OSHA requires a respiratory protection program that includes at least: medical certification, training, fit-testing, periodic environmental monitoring, maintenance, inspection, cleaning, and convenient, sanitary storage areas. **Other:** Wear chemically protective gloves, boots, aprons, and gauntlets made from Viton or Neoprene to prevent skin contact. *Do not* use natural rubber or polyvinyl chloride (PVC). **Ventilation:** Provide general and local exhaust ventilation systems to maintain airborne concentrations below OSHA PELs (Sec. 2). Local exhaust ventilation is preferred because it prevents contaminant dispersion into the work area by controlling it at its source.[103] **Safety Stations:** Make available in the work area emergency eyewash stations, safety/quick-drench showers, and washing facilities. **Contaminated Equipment:** Separate contaminated work clothes from street clothes and launder before reuse. Remove this material from your shoes and clean personal protective equipment. **Comments:** Never eat, drink, or smoke in work areas. Practice good personal hygiene especially before eating, drinking, smoking, using the toilet, or applying cosmetics.

Section 9. Special Precautions and Comments

Storage Requirements: Prevent physical damage to containers. Store in steel drums, in a cool, dry, well-ventilated area away from sunlight, heat, ignition sources, and incompatibles (Sec. 5). Store large quantities in galvanized iron, black iron, or steel containers; small amounts in dark (amber) colored glass bottles. **Engineering Controls:** To reduce potential health hazards, use sufficient dilution or local exhaust ventilation to control airborne contaminants and to maintain concentrations at the lowest practical level. Design processes so that the operator is not directly exposed to the solvent or its vapor. Do not use open electric heaters, high-temperature processes, arc-welding or open flames in TCE atmospheres. **Administrative Controls:** Consider preplacement and periodic medical exams of exposed workers with emphasis on skin, respiratory, cardiac, central and peripheral nervous systems, and liver and kidney function. Employ air and biological monitoring (BEIs). Instruct employees on safe handling of TCE.

Transportation Data (49 CFR 172.101)

DOT Shipping Name: Trichloroethylene
DOT Hazard Class: 6.1
ID No.: UN1710
DOT Packing Group: III
DOT Label: Keep Away From Food
DOT Special Provisions (172.102): N36, T1

Packaging Authorizations
a) **Exceptions:** 173.153
b) **Non-bulk Packaging:** 173.203
c) **Bulk Packaging:** 173.241

Quantity Limitations
a) **Passenger Aircraft or Railcar:** 60L
b) **Cargo Aircraft Only:** 220L

Vessel Stowage Requirements
a) **Vessel Stowage:** A
b) **Other:** 40

MSDS Collection **References:** 26, 73, 100, 101, 103, 124, 126, 127, 132, 133, 136, 139, 140, 148, 149, 153, 159, 163, 164, 167, 168, 171, 174, 175, 176, 180.
Prepared by: M Gannon, BA; **Industrial Hygiene Review:** D Wilson, CIH; **Medical Review:** AC Darlington, MD

Copyright © 1992 by Genium Publishing Corporation. Any commercial use or reproduction without the publisher's permission is prohibited. Judgments as to the suitability of information herein for the purchaser's purposes are necessarily the purchaser's responsibility. Although reasonable care has been taken in the preparation of such information, Genium Publishing Corporation extends no warranties and assumes

Genium Publishing Corporation
1145 Catalyn Street
Schenectady, NY 12303-1836 USA
(518) 377-8854

Material Safety Data Sheets Collection:

Sheet No. 410
Carbon Tetrachloride

Issued: 12/80 Revision: B, 4/90

Section 1. Material Identification

Carbon Tetrachloride Description: A chlorinated hydrocarbon derived from interacting carbon disulfide and chlorine in the presence of iron, or chlorination of methane or higher hydrocarbons at 482 °F/250 °C to 752 °F/400 °C. Carbon tetrachloride is treated with caustic alkali solution to remove sulfur chloride. Its primary use is in manufacturing flurocarbon propellants. It is also used in producing of semiconductors, chlorinating organic compounds, metal degreasing, refrigerants; as a solvent for oils, fats, resins, rubber waxes, lacquers, and varnishes; and as an agricultural fumigant. This material was widely used in the dry-cleaning industry.
Other Designations: CAS No. 0056-23-5; CCl_4; carbon chloride; carbon tet; methane tetrachloride; perchloromethane; tetrachlorocarbon; tetrachloromethane.
Manufacturer: Contact your supplier or distributor. Consult the latest *Chemicalweek Buyers' Guide*[73] for a suppliers list.

R 1
I 4
S 2*
K 0
*Skin absorption

NFPA

HMIS
H 3
F 0
R 0
PPG†
† Sec. 8

Section 2. Ingredients and Occupational Exposure Limits

Carbon tetrachloride, ca 100%

OSHA PEL
8-hr TWA: 2 ppm, 12.6 mg/m³

ACGIH TLV (Skin), 1989-90
TLV-TWA: 5 ppm, 31 mg/m³

NIOSH REL, 1987
60-min ceiling: 2 ppm, 12.6 mg/m³

Toxicity Data*
Rat, oral, LD_{50}: 2800 mg/kg; toxic effects not yet reviewed
Rat, inhalation, LC_{50}: 8000 ppm over 4 hr; no toxic effect noted
Human, inhalation, TC_{Lo}: 20 ppm inhaled produces gastrointestinal effects (nausea or vomiting)

* See NIOSH, *RTECS* (FG4900000), for additional irritative, mutative, tumorigenic, and toxicity data.

Section 3. Physical Data

Boiling Point: 169.77 °F/76.54 °C
Melting Point: -9.4 °F/-23 °C
Vapor Pressure: 91.3 mm Hg at 68 °F/20 °C
Vapor Density (Air = 1): 5.32
Molecular Weight: 153.84 g/mol
Specific Gravity (H_2O = 1 at 39 °F/4 °C): 1.5940 at 68 °F/20 °C
Water Solubility: Very slightly soluble (800 mg/l at 68 °F/20 °C)
Evaporation Rate (Butyl Acetate = 1): 12.8

Appearance and Odor: A colorless liquid with a heavy ethereal odor. The high and low odor thresholds are, respectively, 128.4 and 60 mg/m³. Odor is not an adequate warning sign to prevent overexposure.

Section 4. Fire and Explosion Data

Flash Point: None reported	Autoignition Temperature: None reported	LEL: None reported	UEL: None reported

Extinguishing Media: Carbon tetrachloride is nonflammable and will not support combustion. Use extinguishing media appropriate to the surrounding fire. This material was previously used as an extinguishing medium in portable fire extinguishers, but its toxicity and fire decomposition products lead to its replacement with "safer" extinguishing media.
Unusual Fire or Explosion Hazards: Carbon tetrachloride can react violently with hot or burning metals such as aluminum and magnesium.
Special Fire-fighting Procedures: Since fire may produce toxic fumes, wear a self-contained breathing apparatus (SCBA) with a full facepiece operated in the pressure-demand or positive-pressure mode and fully encapsulating suit. Use water spray to cool fire-exposed containers. Be aware of runoff from fire control methods. Do not release to sewers or waterways.

Section 5. Reactivity Data

Stability/Polymerization: Carbon tetrachloride is stable at room temperature in closed containers under normal storage and handling conditions. Hazardous polymerization cannot occur.
Chemical Incompatibilities: Carbon tetrachloride reacts violently with fluorine gas, alkali metals, and aluminum (see reference 126 for specific incompatibilities).
Conditions to Avoid: This material has caused explosions when used as a fire extinguisher on wax fires and uranium fires. It may also form toxic phosgene when used to put out electrical fires.
Hazardous Products of Decomposition: Thermal oxidative decomposition of carbon tetrachloride can produce toxic phosgene and hydrogen chloride.

Copyright © 1990 Genium Publishing Corporation.
Any commercial use or reproduction without the publisher's permission is prohibited.

Section 6. Health Hazard Data

Carcinogenicity: The NTP, IARC, and ACGIH list carbon tetrachloride as an anticipated human carcinogen, a possible human carcinogen, and a suspected human carcinogen, respectively.

Summary of Risks: Carbon tetrachloride is highly toxic and irritating by inhalation, ingestion (mean lethal dose is 5 to 10 ml), and skin absorption. Alcohol's synergistic effects markedly increase CCl_4's toxicity. Excessive exposure may result in central nervous system depression, cardiac arrhythmias, and gastrointestinal symptoms. In humans the majority of fatalities have been the result of renal injury with secondary cardiac failure. Kidney and liver damage can occur from severe acute or chronic exposure. Human liver damage occurs more often after ingestion of the liquid than after the inhalation of the vapor. However, after a 30 min to 1 hr exposure to concentrations of 1000 to 2000 ppm, humans have died from acute renal damage.

Medical Conditions Aggravated by Long-Term Exposure: Prolonged recovery and permanent disability of the liver, kidney, and lungs are possible.

Target Organs: Central nervous system, eyes, skin, liver, kidneys, lungs.

Primary Entry Routes: Inhalation, percutaneous (through the skin).

Acute Effects: Acute exposure symptoms include eye, nose, skin, and throat irritation; cough, dyspnea, cyanosis, cardiac arrhythmias, headaches, dizziness, mental confusion, nausea, vomiting, abdominal pain, and diarrhea. Jaundice and abnormal liver enlargement accompanied by oliguria (reduced excretion of urine), proteinuria (protein in urine), and hematuria (blood in urine) may occur even after several days delay.

Chronic Effects: Chronic exposure symptoms include defatting dermatitis, headaches, dizziness, mental confusion, apathy, anorexia, nausea, vomiting, abdominal pain, weight loss, narrowing of visual field, optic nerve damage with possible blindness, hearing loss, and renal and hepatic decompensation (loss of these organs' ability to correct dysfunction). Chronic exposure may result in the development of aplastic anemia.

FIRST AID

Eyes: Flush immediately, including under the eyelids, gently but thoroughly with flooding amounts of running water for at least 15 min.

Skin: *Quickly* remove contaminated clothing. After rinsing affected skin with flooding amounts of water, wash it with soap and water.

Inhalation: Remove exposed person to fresh air and support breathing as needed.

Ingestion: Never give anything by mouth to an unconscious or convulsing person. Give one to two glasses of water to dilute and induce vomiting, unless the person shows evidence of decreasing mental functioning and awareness.

After first aid, get appropriate in-plant, paramedic, or community medical support.

Physician's Note: To minimize hepatorenal damage, consider intravenous acetylcysteine. Hyperbaric oxygen is also utilized for significant exposures. Dialysis has also been suggested in severe cases. Give cardiorespiratory support as indicated and carefully monitor fluid and electrolytes. Closely monitor hepatic and renal functions. Avoid epinephrine because of myocardial sensitization and potential for inducing ventricular arrhythymias.

Section 7. Spill, Leak, and Disposal Procedures

Spill/Leak: Notify safety personnel, evacuate area, and provide maximum exhaust ventilation. Cleanup personnel should protect against inhalation and skin and eye contact. Small spills can be absorbed on paper or some noncombustible, inert ingredient and allowed to evaporate in a hood. For large spills, dike far ahead to contain spill for disposal. Prevent release of CCl_4 to surface water or sewers. Follow applicable OSHA regulations (29 CFR 1910.120).

Disposal: Contact your supplier or a licensed contractor for detailed recommendations. Follow applicable Federal, state, and local regulations.

EPA Designations

Listed as a RCRA Hazardous Waste (40 CFR 261.33)

Not Extremely Hazardous Substance (40 CFR 355): Not listed

Listed as a SARA Toxic Chemical (40 CFR 372.65)

Listed as a CERCLA Hazardous Substance* (40 CFR 302.4), Reportable Quantity (RQ): 5000 lb (2270 kg) [* per RCRA, Sec. 3001, per Clean Water Act, Sec. 307(a), 311 (b)(4)]

OSHA Designations

Listed as an Air Contaminant (29 CFR 1910.1000, Table Z-2)

Section 8. Special Protection Data

Goggles: Wear protective eyeglasses or chemical safety goggles, per OSHA eye- and face-protection regulations (29 CFR 1910.133).

Respirator: Follow OSHA respirator regulations (29 CFR 1910.134) and, if necessary, wear a NIOSH-approved respirator. For emergency or nonroutine operations (cleaning spills, reactor vessels, or storage tanks), wear an SCBA.

Warning: Air-purifying respirators do *not* protect workers in oxygen-deficient atmospheres.

Other: Wear impervious gloves, boots, aprons, and gauntlets to prevent skin contact. Polyvinyl alcohol protective gear is recommended.

Ventilation: Provide general and local explosion-proof ventilation systems to maintain airborne concentrations below the OSHA PEL, ACGIH TLV, and NIOSH REL (Sec. 2). Local exhaust ventilation is preferred since it prevents contaminant dispersion into the work area by controlling it at its source.[103]

Safety Stations: Make available in the work area emergency eyewash stations, safety/quick-drench showers, and washing facilities.

Contaminated Equipment: Never wear contact lenses in the work area: soft lenses may absorb, and all lenses concentrate, irritants. Remove this material from your shoes and equipment. Launder contaminated clothing before wearing.

Comments: Never eat, drink, or smoke in work areas. Practice good personal hygiene after using this material, especially before eating, drinking, smoking, using the toilet, or applying cosmetics.

Section 9. Special Precautions and Comments

Storage Requirements: Store in tightly closed container in a cool, dry, well-ventilated, low fire-risk area away from incompatible materials (Sec. 10), direct sunlight, and heat. Prevent exposure of vapors to high temperature to prevent decomposition to toxic and corrosive gases and vapors.

Engineering Controls: Avoid vapor inhalation and skin or eye contact. Use only with adequate ventilation and appropriate personal protective gear. Monitor vapor levels and institute a respiratory protection program which includes training, maintenance, inspection, and evaluation.

Practice good personal hygiene procedures. When possible, substitute a less hazardous solvent for CCl_4. Provide preplacement and biannual medical exams, including studies of liver and kidney function. Prevent exposing individuals with liver, kidney, or central nervous system diseases, or alcoholism. Alcohol's synergistic effects markedly increase CCl_4's toxicity.

Transportation Data (49 CFR 172.101, .102)

DOT Shipping Name: Carbon tetrachloride
DOT Hazard Class: ORM-A
ID No.: UN1846
Label: None
DOT Packaging Requirements: 173.620
DOT Packaging Exceptions: 173.505

IMO Shipping Name: Carbon tetrachloride
IMO Hazard Class: 6.1
IMO Label: Poison
IMDG Packaging Group: II
ID No.: UN1846

***MSDS Collection* References:** 7, 26, 38, 53, 73, 84, 85, 88, 89, 100, 103, 109, 124, 126, 127, 129, 130, 131, 134, 136, 137

Prepared by: MJ Allison, BS; **Industrial Hygiene Review:** DJ Wilson, CIH; **Medical Review:** MJ Hardies, MD

MS

Copyright © 1990 by Genium Publishing Corporation. Any commercial use or reproduction without the publisher's permission is prohibited. Judgments as to the suitability of information herein for the purchaser's purposes are necessarily the purchaser's responsibility. Although reasonable care has been taken in the preparation of such information, Genium Publishing Corporation extends no warranties ... of merchantability or fitness for a particular purpose ... of such information.

APPENDIX E

AIR MONITORING FORM
DAILY INSTRUMENT CALIBRATION CHECK FORM
NOISE MONITORING FORM

AIR MONITORING FORM

Project Name:

Project Number:

Contaminants:

Date	Time	Ionization Detector Reading		Explosimeter Reading		Detector Tube Readings (ppm)	Location	Purpose	Initials
		FID	PID	%LEL	$\%O_2$				

DAILY INSTRUMENT CALIBRATION CHECK FORM

Project Name_____ Instrument_____

Job Number_____ ID #_____

DATE	INSTRUMENT	BATTERY CHECK OK?	ZERO ADJUST OK?	CALIBRATION GAS (PPM)	READING (PPM)	CALIBRATED BY:	COMMENTS

rev9-96

NOISE MONITORING FORM

Project Name:

Project Number:

Noise: Equipment Used: (Type/Model)*

Date	Task	Location/Employee	Noise Reading dB(A)	Initials

*Pre-calibrate noise monitor prior to conducting noise survey.

APPENDIX F

EXCAVATION/TRENCHING SAFETY PROCEDURES
TRENCH SAFETY DAILY FIELD REPORT
SOILS CLASSIFICATION CHECKLIST
SOILS ANALYSIS CHECKLIST
EXCAVATION/TRENCHING - UNDERGROUND UTILITIES
UNDERGROUND UTILITY CONTACT PREVENTION AND MANAGEMENT PLAN
EXCAVATION/TRENCHING - USTs
UST REMOVALS

ATTENTION:

THE TRENCH SAFETY DAILY FIELD REPORT FORM MUST BE COMPLETED AT LEAST DAILY DURING EXCAVATION/TRENCHING OPERATIONS AND MORE FREQUENTLY IF CONDITIONS CHANGE.

EXCAVATION/TRENCHING SAFETY PROCEDURES

Evaluation: Conducted by Competent Person 29 CFR 1926.

- Two soil classifications must be completed to determine sloping/shoring requirements.
- Conduct daily inspections of all open excavations prior to entry.

Egress: Excavation areas 4 feet (1.22 meters) or more deep

- Ladders must be spaced no more than 25 feet (7.62 meters) apart so that a person in the trench is always within 25 feet (7.62 meters) of a ladder for egress.

Shoring: Excavation areas 5 feet (1.52 meters) or more deep

- Excavations must be sloped or shored if personnel will be entering the excavation.
- Soil classification may be done only by a competent person using both a visual and manual test.

WARNING: One soil classification may not be enough. Outside disturbances during excavation may change even the best classification.
Inspect the soil after any condition change.

Storage: All excavations

- Spoils and heavy equipment must be stored a minimum of 2 feet (0.61 meters) from the edge of the excavation.
- Store spoils on the downhill side.

Maximum Allowable Slopes

Soil or Rock Type	Maximum allowable slopes (H:V)[1] for excavations less than 20 feet (6.10 meters) deep[2]
Stable Rock[3]	Vertical (90°)
Type A - highly cohesive soil	3/4:1 (53°)
Type B - cohesive soil with some sand	1:1 (45°)
Type C - loose, wet, or sandy soil	1½:1 (34°)

Notes:

1. Numbers shown in parentheses next to maximum allowable slopes are angles expressed in degrees from the horizontal. Angles have been rounded off.

2. Sloping or benching for excavations greater than 20 feet (6.10 meters) deep shall be designed by a registered professional engineer.

3. A short-term maximum allowable slope of ½ H:1V (63°) is allowed in excavations in Type A soil that are 12 feet (3.67 meters) or less in depth. Short-term maximum allowable slopes for excavations greater than 12 feet (3.67 meters) in depth shall be 3/4 H:1V (53°)

TRENCH SAFETY DAILY FIELD REPORT

DATE:_____

Project Name:_____
Project Manager:_____
Weather Conditions:

I hereby attest that the following conditions existed and that the following items were checked or reviewed during this inspection.

INSPECTION ITEM	YES	NO	NA
All open trenches were inspected.			
Were any tension cracks observed along top of any slopes?			
Was any water seepage noted on trench walls or trench bottom?			
Was bracing system installed in accordance with design?			
Type shoring being used_____.			
Is shoring secure?			
Was there evidence of shrinkage cracks in trench walls?			
Was there any evidence of caving since the last field inspection?			
Trench box(s) certified with tabulated data?			
Traffic in area adequately away from trenching operations with barricades			
Surface encumbrances and other hazards in area accounted for?			
Protective measures taken for standing water in trench.			
All site personnel wearing reflective vest.			
Atmospheric testing conducted in trenched < 4 feet deep.			
Vibrations from equipment or traffic too close to trenching operation?			

Observations:_____

Competent Person signature_____

Soils Analysis Checklist

This checklist must be completed when soil analysis is conducted to determine the excavation soil type. A separate analysis must be performed on each layer of soil excavation walls. Additional soil analysis must also be performed for the excavation (trench) when it stretches over a distance where soil type may change.

Name:___ Date:___ Time:_____

Competent person:_____

Where was the sample taken from?_____

Excavation: Depth_ Width_____ Length_____

SOIL CLASSIFICATION - VISUAL TEST

ITEM	TEST PROTOCOL	YES	NO	COMMENTS/ACTIONS
1	**Soil Particle Type** ▪ Fine Grained/Cohesive ▪ Course Grained(Sand or Gravel)			
2	**Excavation Water Conditions** ▪ Dry ▪ Surface Water Present ▪ Submerged Water Present			
3	**Soil Condition** ▪ Undisturbed ▪ Disturbed ▪ Layered Soil Dipping into Excavation ▪ Excavation Exposed to Vibrations ▪ Cracked/Fissures/Spalling Observed			
4	**Additional Excavation Hazards** ▪ Surface Encumbrances(If YES - What Type) ▪ Hazardous Atmosphere in Excavation (If YES - List Source and Conditions)			

SOIL ANALYSIS - MANUAL TEST

RESULTS	THUMB TEST	Check here if conducted
	Type A - Soil identified by thumb with great degree of effort	
	Type B - Soil identified by thumb with some degree of effort	
	Type C - Soil identified by thumb with little degree or no effort	
RESULTS	**PENETROMETER OR SHEARVANE Circle which used**	**Write in brand/model**
	Type A - Soil with unconfined compressive strength of 1.5 tons per square foot (tsf) or greater	
	Type B - Soil with unconfined compressive strength > 0.5 to 1.5 tsf	
	Type C - Soil with unconfined compressive strength < 0.5 tsf or soil that is submerged or exposed to water	

Soil Classification

☐ Type A ☐ Type B ☐ Type C

Selection of Protective System (Appendix F)

PROTECTIVE SYSTEM	Sloping Specify angle_____ _____ Timber shoring _____ Aluminum hydraulic shoring _____ Trench Shield Max Depth in this soil _____

Note: Although OSHA will accept the above tests in most cases, some states do not - **check your state safety requirements for trenching regulations.**

EXCAVATION/TRENCHING - UNDERGROUND UTILITIES

Documentation:

- Contact the local utility service (Digsafe, Misutility...), and document permit number
- A company utility representative in questionable areas, elaborate trenching projects tight/tricky areas or whenever drilling adjacent to a building or structure
- Contact the property owner and/or town building department for plans

Physical Location:

- Use a metal detector to aid in the identification of obstructions
- Observe utility markers, vent pipes, catch basins, newly paved areas, etc.

Safety Procedures:

- Machine excavate five feet from any underground utility, tank, or utility marker
- Hand dig in utility "**five-foot** tolerance zone" until the service is exposed
- Utilize test pits to establish and QC markers for sensitive utility locations

General Notes:

- Comply with local and state codes and regulations
- Utilize experienced and trained equipment operators
- Use appropriate subcontractors and applicable insurance riders
- Hand dig per customer mandate

Underground Utilities Schematic (Plan View)

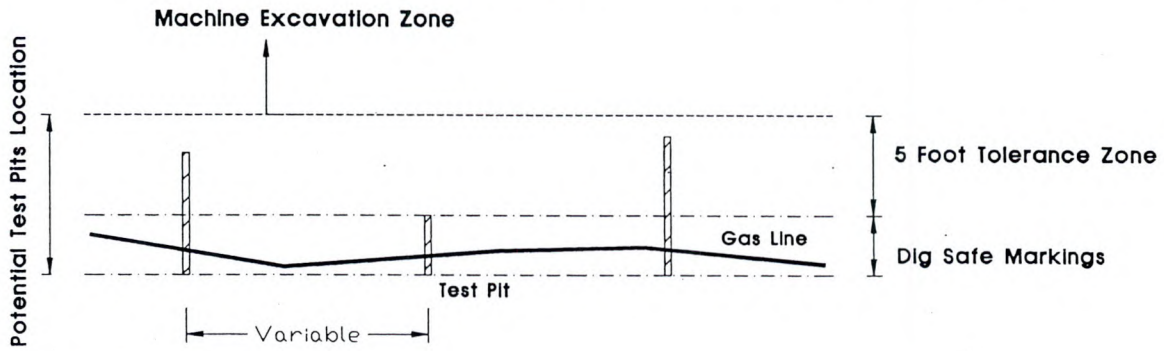

UTILITY MARK-OUT RECORD SHEET

Facility:_____ Location:_____

IT Corporation Representative:_____ Date Called:_____

County of Work:_____ Township of Work:_____

Contact Miss Dig to have subgrade utilities marked. The nearest intersecting street for this site is: _____. We need the entire site area marked since we do not know exactly where we will be drilling/excavating. The site needs to be marked by:_____

List which utilities they will have marked. Confirmation Number:_____

List other known utilities in the area that they do not mark:_____

Contact other known utilities not contracted by Miss Dig to have them mark the site.

MAJOR UTILITIES MARKED BY COLOR CODE

ELECTRIC - RED

GAS - YELLOW

COMMUNICATIONS/CABLE - ORANGE

WATER - BLUE

SEWER - GREEN

OTHER CONTACTS:

IMPORTANT NOTE: ALL UNDERGROUND UTILITIES MAY NOT BE LOCATED BY MISS DIG.

UNDERGROUND UTILITY CONTACT PREVENTION AND MANAGEMENT PLAN

Check Off When Completed

STEPS	TASK DESCRIPTION	RESPONSIBLE EMPLOYEE
☐ STEP 1	Obtain site blueprints from client, if available, to show buried utility/conduits.	PM
	If site blueprints are unavailable **other methods should be employed to identify subsurface conduits in the field. Examples include privately contracted utility locators such as SM&P, a hand-held utility location device, field observations (cut pavement, signs and overhead lights, water, electric, and gas meters, etc.), and customer personnel with knowledge of conduit locations. No one tool should be relied upon. Instead, as many tools as practicable should be employed to insure that all known/suspect conduits have been identified.**	PM and/or field personnel
	Mark out any proposed digging locations with white survey paint.	
☐ STEP 2	Contact underground utility locating service (before you dig). Give proposed drilling dates, location, etc. **Documented notification of the proper underground notification service at a minimum of 48 or 72 hours prior to the scheduled site work.* (Check with the state for notification requirements).**	PM Assistant for contacting "miss dig" and/or field personnel
	If possible, arrange site visit with client, facilities maintenance manager, or other site knowledgeable person to verify, utility and drilling/excavation locations.	PM
	Regarding subcontractors: at a minimum, excavation subcontractors will be required to supply sufficient labor to complete all requested installation tasks.	PM
☐ STEP 3	**The HASP will be amended to include emergency telephone numbers for all utility companies identified during the notification process.**	Office safety coordinator updates HASP with PM approval.

UNDERGROUND UTILITY CONTACT PREVENTION AND MANAGEMENT PLAN (continued)

STEPS	TASK DESCRIPTION	RESPONSIBLE EMPLOYEE
☐ STEP 4	On the day that on-site activities are scheduled to begin, **at the first tailgate safety meeting, the locations of all known/suspect utilities (subgrade and overhead) will be reviewed with all personnel in the field (IT Corporation and subcontractors).**	PM and/or field personnel
	Make sure that all underground utility locator markings are visible for each noted utility, etc. Note any discrepancies. Visually inspect for undocumented trenches, laterals, etc. that may be visible as discolored areas, patched pavement, and not marked accordingly.	PM and/or field personnel
☐ STEP 5	Pre-screen each drilling/digging location by hand augering and/or post hole digger to a depth of at least 3 to 5 feet using a 3-inch OD minimum clam-shell style post hole digger and/or hand auger. Inspect excavation periodically with flashlight to check for visual obstructions. Discontinue immediately upon encountering any substantial resistance to hand auger and/or post hole digger.	Subcontractors to conduct hand augering and/or post hole digging under IT Corporation oversight.
☐ STEP 6	**During excavation/trenching activities, barricades and cones with flags will be used to mark the 10-foot distance from a located conduit. This will serve as a reminder of the conduit's presence and to alert the IT Corporation supervisor that it is time to pay close attention to excavation/trenching activities.**	Field personnel

STEPS	TASK DESCRIPTION	RESPONSIBLE EMPLOYEE
☐ STEP 7 ENCOUNTER	In the unlikely event that a subsurface utility/conduit is encountered, immediately halt all drilling/digging operations and secure the area. Try to determine the source (i.e., gas line, water line, etc.) and contact the emergency numbers for that utility. Contact the PM immediately. Take all safety precautions to insure that all flames, etc. are extinguished, and all personnel are kept away from the area. Monitor for LEL, O_2, PID, and any other substances that may be present as appropriate for that utility encounter (i.e., gas line).	IT Corporation field personnel secures area and contacts PM immediately.
	The PIR is filled out by field personnel and submitted to the PM.	PM contacts client, etc., to discuss appropriate actions. IT Corporation field personnel contacts local emergency officials as necessary (i.e., fire, police, EPA, public works, etc.). PM submits PIR to appropriate IT Corporation management and prepares follow-up report.

EXCAVATION/TRENCHING - UST

Documentation:

- Refer to existing UST plans for potential location.
- Contact property owners for potential location.
- Contact local Fire or Building Department for information.

Physical Location Characteristics: Cross-check to existing documentation, if available

- Determine tank capacity (from tank chart, owner, delivery records).
- Determine tank opening locations and spacing.
- Determine tank diameter (from tank chart, inventory records or gauge stick).
- Determine if tank is fiberglass or steel; single walled or double walled
- Refer to available UST vendor info charts on standard USTs for dimensions and tank opening locations.

Safety Procedures:

- Empty tank of flammable liquids prior to excavation activities. Inert tank of flammable vapors and eliminate ignition sources (if practical).
- Drill no closer than five feet from suspected tank location or other nearby underground utilities.

General Notes:

- Concrete pad on top of the USTs is sized to overhang the footprint of the tanks by 1 to 2 feet in each direction. Beware of exceptions.
- When possible, have the owner/client mark the locations for drilling and accept responsibility for potential mishaps in writing.
- Redundant information cross-checking to reduce oversight errors
- Visual inspection of augured or excavated materials for pre-gravel, etc., indicative of UST backfill/bedding.

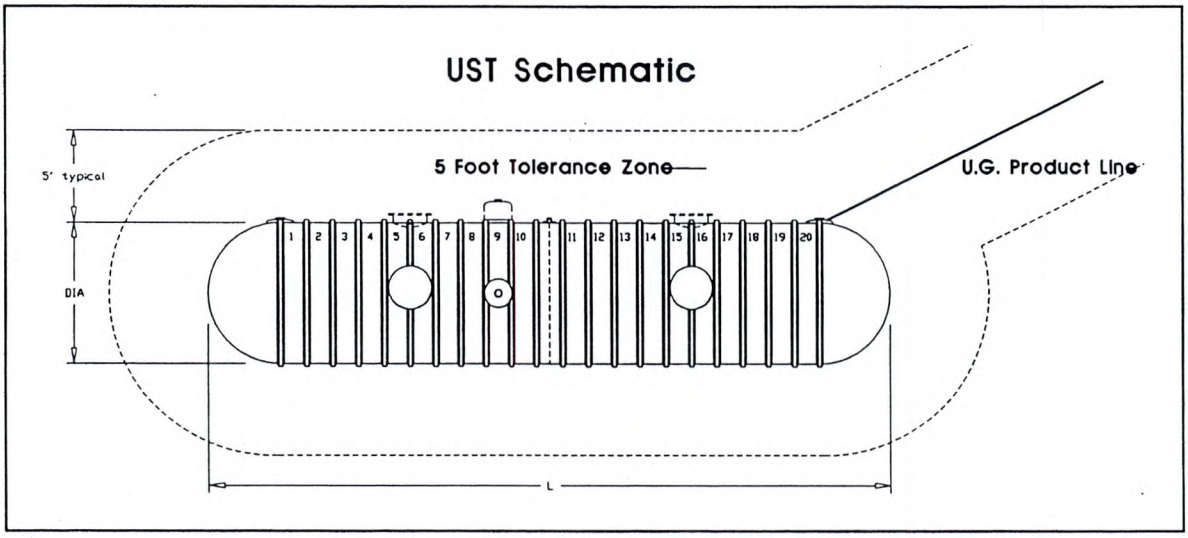

UST REMOVALS*		
Minimum Action	**Site Set-Up**	**Precautions**
1. Ignition sources must be eliminated 2. Designate a **no smoking** zone or area. 3. Use pneumatic/nonsparking tools when appropriate. 4. Define the work area with barricades and hazard tape. 5. Contact local underground utility locating service: Check location of all utilities including water and sewer. 6. Wear Level D PPE: hard hat, safety glasses, steel-toed and shank boots, and traffic vest. Upgrade to modified Level D when possibility of contact to skin or work uniform can occur. Upgrade to Level C when air monitoring reveals action levels have been exceeded. This applies to all on-site personnel including subcontractors. 7. Perform air monitoring with an oxygen/combustimeter and an organic vapor analyzer at frequent intervals.	1. Ground vacuum truck. 2. Park vacuum truck downwind of excavation. 3. Vent vacuum truck vapors at least 12 feet from the ground surface; refer to the American Petroleum Institute (API) recommendations for greater clearance requirements. 4. Inert the tank with dry ice (1½ lbs. dry ice per 100 gallons tank capacity) or nitrogen. 5. Wear Level B PPE when cleaning tank interiors when indicated by HSR.	1. Verify tank inerting has been accomplished by measuring oxygen to be less than 8%. 2. Monitor LEL and organic vapors frequently in areas around tanks during removal process. **Note: LEL measurements taken in oxygen deficient atmospheres (e.g., in inerted tanks) will not be accurate.** 3. Check local/state requirements for tank removal/disposal regulations. 4. Assist subcontractor in performing tasks according to the HASP. 5. Notify the PM **immediately** when a sub-contractor will not follow site specific safety protocols. The PM must inform the client.
* Refer to IT Corporation's UST Safety Training Manual for detailed information.		

APPENDIX G

CSE HAZARD ANALYSIS FORM
SITE-SPECIFIC CONFINED SPACES
CSE PERMIT
CONFINED SPACE PERSONNEL REQUIREMENTS

IT CORPORATION
CSE
Hazard Analysis Form

Site Name:_____

Site Address:_____

_____

CSE Name/Number:_____

CSE Definition: ☐ Vault ☐ Tank/Vessel
☐ Pit ☐ Other_____

CSE Dimensions:	Sketch:
Length =_____ Width =_____ Depth =_____	

Tasks/Activity/Reasons for Entry:	Potential hazards within space:	Other CSE Hazards:
☐ Well Gauging ☐ Bailing Product ☐ Pump Maintenance ☐ Well Sampling ☐ Product Recovery ☐ _____	☐ Oxygen Deficiency ☐ Combustible Vapors ☐ Toxic Vapors ☐ Engulfment ☐ No Hazards	☐ Greater than 5' deep ☐ Difficult access/egress ☐ Energy/isolation* ☐ Prone to flooding ☐ Slippery surface ☐ Hot surfaces (i.e., pipes) *Check here if LO/TO must be performed inside confined space.

FOR USE BY AUTHORIZED CSE SUPERVISOR
CSE Classification

Class I_____ Class II_____ Class III_____	Requirements:
Completed by:_____ Date_____ Reviewed by:_____ Date_____	

SITE-SPECIFIC CONFINED SPACES

Site work may require personnel to enter confined spaces. **No IT Corporation employee or subcontractor shall enter an area identified as a confined space without using the CSE procedures described in this appendix and completing the site specific entry procedures presented in the CSE Permit**. The purpose of the CSE procedure is to protect employees from potentially hazardous environments and to facilitate immediate rescue in an emergency situation. A CSE Permit must be posted at the entrance to each confined space.

CONFINED SPACES
Definition
A confined space has limited or restricted means of entry or exit, is large enough for an employee to enter and perform assigned work, and is not designed for continuous occupancy by the employee.
Examples
These spaces may include, but are not limited to, underground vaults, tanks, storage bins, pits and diked areas, vessels, and silos.
Characteristics
A permit-required confined space is one that meets the definition of a confined space and has one or more of these characteristics: ■ Contains or has the potential to contain a hazardous atmosphere, ■ Contains a material that has the potential for engulfing an entrant, ■ Has an internal configuration that might cause an entrant to be trapped or asphyxiated by inwardly converging walls or by a floor that slopes downward and tapers to a smaller cross section, and/or ■ Contains any other recognized serious safety or health hazards.
Protocol for CSE
■ Personnel trained to conduct CSE procedures. ■ Perform the appropriate air monitoring activity at various depths in the space prior to entry. Monitor for: (1) oxygen level, (2) flammable vapors, and (3) toxic vapors. ■ Ventilate the atmosphere in the space so that entry may be made safe without respiratory protection. If this is not feasible, appropriate respiratory protection must be worn by authorized entrants and attendants. ■ Wear appropriate respiratory protection when ventilation alone can not achieve acceptable atmospheric levels of oxygen or flammable or toxic vapors. ■ Have appropriate retrieval equipment worn by employees in the event of a mishap.

SITE-SPECIFIC CONFINED SPACES			
Location	Permit Required (Y or N)	Buddy Required (Y or N)	Specific Entry Procedures

CSE PERMIT

This permit must be completed prior to entering any confined space and is **ONLY VALID FOR THE DATE AND TIME INDICATED ON THIS FORM.** All procedural requirements contained in IT Corporation Health and Safety Policy and Procedure No. 11 must be followed. In the event a confined space emergency situation develops and rescue is required, notify the following appropriate emergency services:

Ambulance:_____ Fire:_____ Police:_____

Purpose of entry:_____ Location of confined space:_____

Date:_____ Authorized duration:_____ Expires on:_____

Atmospheric Hazards: [ ] Oxygen Deficiency [ ] Flammable [ ] Toxic [ ] Other_____ [ ] Other_____

Physical Hazards: [ ] Mechanical [ ] Electrical [ ] Chemical [ ] Engulfment [ ] Other_____

PRE-ENTRY REQUIREMENTS

Yes N/A

[ ] [ ] Entry area is free of debris and objects
[ ] [ ] Warning barriers and signs are in place
[ ] [ ] Atmospheric monitoring conducted
[ ] [ ] All hazardous lines have been isolated
[ ] [ ] Hot work permit attached
[ ] [ ] All energy sources have been locked out/tagged out
[ ] [ ] The confined space has been drained and flushed
[ ] [ ] Forced air or exhaust ventilation is provided
[ ] [ ] Electrical equipment is properly grounded
[ ] [ ] Ground fault circuit interrupters (GFCI) provided accessible

Yes N/A

[ ] [ ] Non-sparking tools used
[ ] [ ] Low voltage (less than 25v) lighting used
[ ] [ ] Electrical equipment rated for explosive atmospheres
[ ] [ ] No compressed gas cylinders in the confined space
[ ] [ ] Host employer and/or contractors notified
[ ] [ ] Entry and emergency procedures have been reviewed
[ ] [ ] All personnel have been trained (classroom/exercise)
[ ] [ ] All personnel have been informed of potential hazards
[ ] [ ] Attendant stationed at entrance and property inspected
[ ] [ ] Rescue equipment on location and readily

PROTECTIVE EQUIPMENT

Yes	No		Yes	No		Yes	No	
[ ]	[ ]	Hard Hat	[ ]	[ ]	Protective clothing	[ ]	[ ]	Communications Equipment
[ ]	[ ]	Eye/Face Protect.	[ ]	[ ]	Hearing protection	[ ]	[ ]	Ventilation to Provide Fresh Air
[ ]	[ ]	Boots	[ ]	[ ]	Retrieval Device/Tripod	[ ]	[ ]	Respirator (type)_____
[ ]	[ ]	Gloves	[ ]	[ ]	Harness and Lifeline	[ ]	[ ]	Other_____

Atmosphere Test(s) to be taken*	Yes	No	Acceptable Entry Conditions	Time	Time	Time	Time	Time	Time	Time	Time	Time	Time	Time
			Allowable Limits	Enter Air Monitoring Findings Below										
Oxygen			19.5% - 22.0%											
Combustible Gas			Below 10% LEL											
PID/FID														
Carbon Monoxide			0-15 PPM											
Hydrogen Sulfide			0-5 PPM											
Hydrogen Cyanide			0-2 PPM											
Sulfur Dioxide			0-1 PPM											
Ammonia			0-10 PPM											
Benzene			0-0.5 PPM											
Other														

SUPERVISOR APPROVAL: I certify that all necessary precautions have been taken to make this confined space safe for entering and conducting the work during the prescribed time(s) as well as emergency response procedures.

Print Name_____ Sign Name _____ Date_____

Entry Supervisor_____ Permit Prepared by_____

Atmosphere Tester_____ Attendant_____

ENTRANT ACKNOWLEDGMENT: I HAVE BEEN PROPERLY INSTRUCTED FOR SAFE ENTRY INTO THIS CONFINED SPACE AND UNDERSTAND MY DUTIES AND EMERGENCY PROCEDURES

Print Entrant Name	Sign Entrant Name	Employee or S.S. No	Date	Time

*An evaluation should be performed to consider all potential air contaminants which could be present and represent a hazard.

ENTRANT INSTRUCTIONS

All personnel who enter confined spaces must be thoroughly familiar with the following duties for entrants as listed below. Your primary responsibilities include:

- Understand the hazards of the confined space to be entered and the physical effects of those hazards.
- Continuously monitor the atmosphere inside of the confined space with a calibrated, direct reading, air monitoring instrument.
- Evacuate the confined space:
  - If atmospheric hazards exceed the action level,
  - If a hazardous condition is identified inside of the confined space, and
  - Whenever attendant signals entrants to evacuate.
- Read and understand the rescue procedures.
- If PPE is required, the entrant must be properly trained on the use of the equipment prior to entry. PPE must be in good working condition.

ATTENDANT INSTRUCTIONS

You should be thoroughly familiar with the following duties when you assume the responsibility of attendant for a person or persons inside a confined space. Your primary responsibilities are the following:

- Focus on the safety of the personnel inside.
- Understand the hazards of the confined space to be entered and the physical effects of those hazards.
- Maintain the conditions and requirements listed on entry permit.
- Evacuate the space if you observe any condition which you consider hazardous.
- Read and understand the rescue procedures. Get help if an emergency situation develops. never enter the confined space in an emergency unless you are trained and equipped with the proper equipment for confined space rescue operations (i.e., self contained breathing apparatus, safety harness, life line) and are relieved by another attendant.
- Keep an accurate count of all personnel inside of the confined space at all times.
- Do not leave the entrance to the confined space while any personnel are still inside unless you are properly relieved. These instructions must be passes onto your relief.
- If you have any questions regarding the job, check with your supervisor or a health and safety professional.

ENTRY SUPERVISOR'S INSTRUCTIONS

You should be thoroughly familiar with the following details to quality as the Entry Supervisor for a permit-required CSE procedure.

- Requirements for confined space entrant and attendant instructions.
- Knowledge of the hazards that may be faced during entry, including information in the mode, signs and symptoms and consequences of exposure.
- Ability to verify that the appropriate entries have been made on the permit, and that all tests specified by the permit have been conducted and that all procedures and equipment specified by the permit are in place before endorsing the permit and allowing entry to begin.
- Procedures to terminate the entry permit when the CSE operations have been complete or when a condition exists that is not allowed under entry permit requirements.
- Ability to verify that rescue services are available and that the means of summoning them are operable.
- Procedures to remove unauthorized individuals who enter or who attempt to enter the permit space during entry operations.
- Ability to take responsibility for the confined space when entry is transferred to other personnel.
- Ability to determine that entry operations are still consistent with the terms of the CSE permit and that the prescribed intervals regardless of changes in entry personnel.

APPENDIX H

HOT WORK PERMIT
HOT WORK JSA

HOT WORK PERMIT

Project Name_____ Job #_____

Hot Work Task Description:_____

Workers/Welders Conducting Hot Work_____

(PERMIT MUST BE COMPLETED IN ITS ENTIRETY AND POSTED BEFORE HOT WORK BEGINS)

Action Item	Yes	No	NA
Has client representative been notified of intended hot work?			
Hazardous materials involved? Name:_____			
Will hot work impact the general public, customers or operations employees?			
Will the intended hot work need to be coordinated with other contractors who may be working on the site to make them aware of any hazards and the scope of work to be performed?			
Have hazardous energy sources been identified, isolated, and locked out - tagged out before the start of the project?			
Will hot work be conducted within a confined space?			
All testing equipment (i.e., CGI, oxygen meter, etc.) and fire fighting equipment (i.e., extinguisher, etc.) have been checked to ensure proper operation and calibration before the start of this project?			
Does task require a designated fire watch **(30 minutes after work)**?			
Flammable and combustible materials within 35 feet have been cleared or shielded.			
All fuel sources have been identified and protected (USTs, ASTs, sewers, piping).			
The area has been restricted with proper barriers and signs.			
The area has been tested to be certain that atmosphere is 0% LEL before starting hot work.			
Flame sensitive areas and equipment (including cylinders and gas delivery lines) exposed to slag, heat, and sparks are protected by flame a resistant blanket, shield, or removed from the area?			
Escape routes have been identified before starting work?			
Is ventilation equipment needed? Type needed:_____			

THE FOLLOWING PROTECTIVE EQUIPMENT WILL BE REQUIRED (PLEASE CHECK):

	Yes No		Yes No
Welding Goggles/Shield___ Tint	_ _	Hearing Protection	_ _
Safety Boots	_ _	Head Protection	_ _
Leather Gloves	_ _	Safety Harness	_ _
Supplied Air Respirator	_ _	Welding Leathers - Top	_ _
APR ___ Cartridge	_ _	Welding Leathers - Bottom	_ _
Cold Cut Only Method Required:_____		Hot Cut Method Allowed:_____	

APPROVALS:

_____ _____

IT Corporation Site Manager or Site Safety Officer Date

Name of Employee Performing Hot Work_____ Fire Watch Representative_____

Hot Work/JSA
Welding/Torch Cutting

Job Hazards	Safeguards/Precautions
1. Unsafe act Untrained worker	a. Require qualified operators only. b. Provide training per 29 CFR 1910.1200. c. Provide proper PPE. d. Inspect area prior to welding/cutting. e. Use permit system. f. Use fire watch for 30 minutes following termination of work.
2. Welder's flash to eye	a. Use filter lens based on actual hazard or welding technique in accordance with the American Welding Society Laws shade selector chart. b. Provide warning signals, barricades or similar means to protect other workers, general public. c. Provide screens or barriers to protect other workers, general public.
3. Radiation burns, skin burns, heat burns	a. Helmet with proper filter lens. b. Gauntlet gloves, leather apron. c. Cotton shirt, long sleeves, buttoned at sleeves and collar. d. Cotton cuffless pants. e. Steel toe boots, 6-inch minimum height. f. Hearing/ear cover protection as appropriate. g. Work zone definition - see 2(a) and (b) above.
4. Faulty equipment	a. Use equipment that is in good working condition. b. Inspect valves, regulators, and hoses prior to use. c. Preventive maintenance performed per manufacturer specifications.
5. Toxic fumes and gases	a. Provide source ventilation. b. Provide respiratory protection, selected based on hazard. c. Rope off area, define work area with cones, caution tape or similar (see 2(a) and (b) above).
6. Adjacent flammable/ combustible materials	a. Move combustibles at least 50 feet from work area. b. If they cannot be moved consider protection by metal guards or flame proof curtain. c. Openings in walls, floors or ducts should be covered if within 35 feet of work area. d. Assure facility sprinklers are in working condition and will not be taken out of service. e. Suitable fire extinguishing equipment shall be readily available at the work area. f. Designate a reliable means of contacting the Fire Department in the event of an emergency.
7. Flammable/combustible vapors	a. If in an environment classified as a hazardous location then define specific tasks using JSA technique. b. Provide equipment per classification (i.e., explosion proof, etc.) c. Post sign: DANGER - NO SMOKING, MATCHES OR OPEN LIGHTS. d. Ensure person is assigned as fire watch and fully charged extinguisher is present.

Hot Work/JSA
Welding/Torch Cutting

Job Hazards	Safeguards/Precautions
8. CSE	a. Follow CSE procedures. b. Use CSE permit. c. Define specific JSA techniques for that work. d. Exercise caution when using inertion to address O_2 deficiency. e. Exercise caution when using O_2/acetylene fuel mix, address O_2 enrichment from cylinder leak.
9. Unsecured compressed gas cylinders, cylinder handling	a. Store cylinders upright. b. Secure against stationary object. c. Cylinders in excess of 40 pounds in weight must be moved using wheeled cart or motorized truck. d. Lifting cylinders > 40 pounds in weight is prohibited. e. Compatible storage practices = separate O_2 cylinders from flammable combustible gases. f. Use tags on cylinders to mark full, in use or empty. g. Remove protective cap using hand method or use cylinder "cap wrench". Do not jam screwdriver or wrench in cap slots to loosen.
10. Unsafe practice during inactivity	a. Provide protective cap when cylinders are not in use. b. Valves or gas cylinders shall be closed and line pressure relieved. c. Power source of electric welding equipment shall be disconnected.
11. Improper flow of gases, gas mixing, pressure in gas lines	a. Label cylinders per 29 CFR 1910.1200. b. Color code hoses (green = O_2; red = fuel gases; black = inert gas or air hoses). c. Install "flash back" arresters for fuel mixing welding. d. Use acetylene at 15 pounds per square inch (psi) or less.
12. Improper ignition of oxygen/fuel torch	a. Use "spark lighter" to ignite. b. Don't use cigarette, match or lighter for ignition.
13. Static electricity	a. Provide and use grounding clamp for electric area welding equipment.

APPENDIX I

HEAT/COLD STRESS PROCEDURES

HEAT/COLD STRESS PROCEDURES

1.0 HEAT STRESS

Heat stress is a significant potential hazard associated with the work task performed and the type and degree of protective equipment used in hot weather environments. Local weather conditions may produce conditions which will require restricted work schedules in order to protect employees. Monitoring for heat stress will follow one of two protocols depending on whether impermeable clothing (tyvek, saranex, rain gear, etc.) or permeable clothing (cotton coveralls) is worn. This section will apply to both hazardous and non-hazardous waste workers at the site. The SHSO with direction from HSR will determine the environmental wet bulb globe temperature (WBGT) and physiological (heart rate [HR] and oral temperature [OR]) monitoring to be conducted for both types of workers.

1.1 Workers Wearing Permeable Clothing

The ACGIH have set TLVs for worker exposure to heat stress in which it is believed that nearly all workers may be repeatedly exposed without adverse health effects. The TLVs assume that workers are acclimatized, fully clothed in permeable clothing with adequate water and salt intake, and capable of functioning effectively under the given working conditions without exceeding a deep body temperature (BT) of 100.4°Fahrenheit (F). Measurement of the WBGT has been found to be the most adequately measurable environmental factor in which to correlate with the deep BT and other physiological responses to heat. The following table reviews the work/rest regimen to be followed by all permeably clothed workers based upon routinely measured WBGT.

Permissible Heat Exposure TLVs Applicable to Workers Wearing Permeable Clothing

Work/Rest Regimen	Workload		
	Light	Moderate	Heavy
Continuous work	86 (76)	80 (70)	77 (67)
75% work - 25% rest, each hour	87 (77)	82 (72)	78 (68)
50% work - 50% rest, each hour	89 (79)	85 (75)	82 (72)
25% work - 75% rest, each hour	90 (80)	88 (78)	86 (76)

Values are given in °F WBGT.

Rest means minimal physical activity. Rest should be accomplished in the shade. Any activity requiring only minimal activity can be performed during rest period.

() Parentheses indicate the 10 degree adjustment for working in impermeable protective clothing.

1.2 Workers Wearing Impermeable Clothing

Workers who must wear impermeable clothing are held at a higher risk of suffering heat stress. Impermeable clothing impedes sweat evaporation, one of the body's major cooling mechanisms. It is the duty of each employer to alert or notify the SHSO if symptoms of heat stress occur to their respective site personnel. Physiological and environmental monitoring of personnel wearing an impermeable protective equipment ensemble will commence when the ambient temperature rises above 70°F. Environmental monitoring will be conducted continuously for as long as the ambient temperature stays above 70°F and physiological monitoring will be conducted immediately before and after each work period. Frequency of physiological monitoring will increase as the ambient temperature increases or if slow recovery rates are indicated. The break time must be sufficient to allow workers to recover from the effects of heat stress. This will be accomplished by measuring the recovery HR and OT. The break time duration will be determined using the following methodology and criteria:

- Seat person being monitored,
- Take OT, and
- Measure pulse in the following sequence:
  - Pulse #1: 30 seconds to 1 minute after sitting
  - Pulse #2: 2½ to 3 minutes after sitting

An excessive heat stress condition exists when any of the following conditions exist:

1. Oral or ear temperature exceeds 99.5°F
2. If pulse #2 is greater than 90 beats/minute
3. Pulse #1 is greater than 100 beats/minute

Worker cannot return to work until:

- Oral or ear temperature is below 99.5°F
- Pulse rate is below 90 beats/minute
- Recovery HR for workers with HRs over 90 beats per minute is less than 10 beats per minute less than the original HR

Adhering to the guidelines for heat stress prevention and monitoring will greatly minimize the possibility of the occurrence of heat stress. Site personnel must also be aware of the symptoms of heat-related disorders and be prepared to administer the appropriate treatments.

1.2.1 Prevention

A. Provide plenty of fluids. A 50 percent solution of fruit juice or similar solution in water, or plain water will be available. For workers performing work inside an EZ, fluid intake may occur in the CRZ. Workers must first perform a partial decontamination process which will include removal of gloves and washing of hands and face prior to consumption of fluids. The SHSO will monitor the partial decontamination and fluid consumption process to ensure that ingestion of site contaminants does not occur.

B. Work in pairs whenever conducting Level B activity or permit required CSE activity.

C. Provide cooling devices. Ice vests or on-site showers can be provided to reduce BT and/or cool protective clothing.

The amount and type of undergarments worn will be left to the preference of each individual

unless prone to heat stress, especially heat rash. In this case, the worker can wear "long john" cotton type underwear to keep skin off chemical resistant clothing.

D. Adjustment of the work schedule. When practicable, the most labor-intensive tasks should be carried out during the coolest part of the day.

E. Shaded or cooled rest areas. Shaded or cooled rest areas will be provided when site environmental and/or workers physiological responses warrant.

1.1.3 Heat Stress Monitoring

Physiological monitoring of personnel wearing an impermeable protective ensemble will be conducted at regular intervals at the beginning and conclusion of the work period. HR must be periodically measured for all site personnel when heat stress conditions (climate or wearing impermeable clothing). Additional physiological monitoring such as BT and body water temperature (BWT) monitoring can be measured for extreme temperatures and when impermeable clothing is worn.

A. HR must be measured by the radial pulse for 30 seconds as early as possible in the resting period and repeated approximately 3 minutes into rest period.

   The HR at the beginning of the rest period should not exceed 110 beats per minute. The HR also should not exceed 90 beats per minute after approximately 3 minutes of rest. If the HR does exceed the criteria, the next work period will be shortened by 33 percent, while the length of the rest period will remain the same. If the HR still exceeds the criteria at the beginning of the next rest period, the following work period will be shortened by 33 percent.

B. BT can be measured orally with a clinical or disposable thermometer, in accordance with manufacturer's instructions, as early as possible in the rest period (before drinking liquid). Oral or ear temperature at the beginning of the rest period should not exceed 99.5°F. If it does, the next work period will be shortened by 33 percent while the length of the rest period will remain the same. However, if the OT exceeds 99.5°F at the beginning of the next rest period, the following work period will be shortened by another 33 percent. A worker will not be permitted to wear a semi-permeable or impermeable protective ensemble when his/her BT exceed 99.5°F.

C. Body water loss (BWL) due to perspiration can be measured by having the worker weigh him/her self at the beginning and end of each work day. Similar clothing should be worn at both weighing. BWL should not exceed 1.5 percent total body weight in a work day.

Suggested Frequency of Physiological Monitoring for Fit and Acclimated Workers[1]

Adjusted Temperature[2]	Normal Work Ensemble[3]	Impermeable Ensemble[4]
90°F (32.2°C) or above	After each 45 minutes of work	After each 15 minutes of work
87.5°-90°F (30.8°-32.2°C)	After each 60 minutes of work	After each 30 minutes of work
82.5°-87.5°F (28.1°-30.8°C)	After each 90 minutes of work	After each 60 minutes of work
77.5°-82.5°F (25.3°-28.1°C)	After each 120 minutes of work	After each 90 minutes of work
72.5°-77.5°F (22.5°-25.3°C)	After each 150 minutes of work	After each 120 minutes of work

1 For work levels of 250 kilocalories per hour.
2 Calculate the adjusted air temperature (T_{adj}) using the following equation:
T_{adj} (°F) = T_{adj} (°F) + (13 x percent sunshine)
Measure the air temperature (T_{adj}) using a standard mercury-in-glass thermometer with the bulb shielded from radiant heat.
3 A normal work ensemble consists of cotton overalls with long sleeves and pants.
4 An impermeable work ensemble consists of impermeable coveralls with long sleeves and pants.

1.1.4 Recognition and Treatment

Any personnel who observes any of the following forms of heat stress either in themselves or in another worker, will report this information to his or her immediate supervisor or the SSHO.

A. Heat Rash (or prickly heat)

Cause: Continuous exposure to hot and humid air, aggravated by chafing clothing.

Symptoms: Eruption of red pimples around sweat ducts accompanied by intense itching and tingling.

Treatment: Remove sources of irritation and cool the skin with water or wet cloths.

B. Heat Cramps or Heat Prostration

Cause: Profuse perspiration accompanied by inadequate replenishment of body water and electrolytes.

Symptoms: Sudden development of pain and/or muscle spasms in the abdominal region.

Treatment: Remove the worker to the CRZ. Remove protective clothing. Decrease BT and allow a period of rest in a cool location.

C. Heat Exhaustion - **SERIOUS**

Cause: Overexertion in a hot environment and profuse perspiration accompanied by inadequate

replenishment of body water and electrolytes.

Symptoms: Muscular weakness, staggering gait, nausea, dizziness, shallow breathing.

Treatment: Perform the following while simultaneously making arrangements for transport to a medical facility.

Remove the worker to the CRZ. Remove protective clothing. Lie the worker down on his or her back in a cool place, and raise the feet 6 to 12 inches. Keep warm, but loosen all clothing. If conscious, provide sips of a salt water solution consistency of one teaspoon salt in 12 ounces water. Transport the worker to a medical facility.

D. Heat Stroke - **EXTREMELY SERIOUS**

Cause: Same as heat exhaustion.

Symptoms: **No perspiration**, dry mouth, pain in the head, dizziness, nausea.

Treatment: Perform the following while making arrangements for transport to a medical facility.

Remove the worker to the CRZ. Remove protective clothing. Lie the worker down in a cool place and raise the head and shoulder slightly. **Cool without chilling**. Apply ice bags or cold wet cloth to the head. Sponge bare skin with cool water or rubbing alcohol. If possible, place the worker in a tub of cool water. Do not give stimulants. Transport to a medical facility.

HEAT STRESS MONITORING FORM

Project Name:_____

Project Number:_____

SHSO:_____

Date	Title	Ambient Temp	WBGT	Work/ Rest Regimen	Employee/ Location	Pulse Rate	Body Temp	Body Water Loss	Comments

2.0 COLD STRESS

If work on this project begins in the winter months, thermal injury due to cold exposure can become a problem for field personnel. Systemic cold exposure is referred to as hypothermia. Localized cold exposure is generally labeled frostbite.

A. Hypothermia: hypothermia is defined as a decrease in the patient core temperature below 96°F. The BT is normally maintained by a combination of central (brain and spinal cord) and peripheral (skin and muscle) activity. Interferences with any of these mechanisms can result in hypothermia, even in the absence of what normally is considered a "cold" ambient temperature. Symptoms of hypothermia include: shivering, apathy, listlessness, sleepiness, and unconsciousness.

B. Frostbite: frostbite is both a general and medical term given to areas of local cold injury. Unlike systemic hypothermia, frostbite rarely occurs unless the ambient temperatures are less than freezing and usually less than 2°F. Symptoms of frostbite are: a sudden blanching or whitening of the skin; the skin has a waxy or white appearance and is firm to the touch; tissues are cold, pale, and solid.

Prevention of cold related illness can be aided by educating workers on recognizing the symptoms of frostbite and hypothermia and by identifying and limiting known risk factors. The workers should be provided with enclosed, heated environments on or adjacent to the site, dry changes of clothing, and warm drinks.

To monitor the worker for cold related illnesses, start (oral) temperature recording at the job site:

- At the field team leader's discretion when suspicion is based on changes in a worker's performance or mental status.
- At a worker's request.
- As screening measure, two times per shift, under unusually hazardous conditions (e.g., wind-chill less than 20°F, or wind-chill less than 30°F with precipitation).
- As a screening measure whenever any one worker on the site develops hypothermia.

Workers developing moderate hypothermia (a core temperature of 92°F) should not return to work for at least 48 hours.

Table 3. Progressive Clinical Symptoms of Hypothermia

Core Temperature (°F)	Symptoms
99.6	Normal core body temperature
96.8	Metabolic rate increases
95.0	Maximum shivering
93.2	Victim conscious and responsive
91.4	Severe hypothermia
89.6 - 87.8	Consciousness clouded, blood pressure difficult to obtain, pupils dilated but react to light, shivering ceases
86.0 - 84.2	Progressive loss of consciousness, muscular rigidity increases, pulse and blood pressure difficult to get, respiratory rate decreases
78.8	Victim seldom conscious
64.4	Lowest accidental hypothermia victim to recover

In order to minimize the risk of the hazards of working in cold environments, workers will be trained and periodically reinforced in the recognition of the physiologic responses of the body to cold stress. In addition, the use of insulated work clothing, warm shelters and work/warming regimens may be used to minimize the potential hazards of cold stress. Also, special attention will be paid to equipment warm-up time and freeze protection for vessels, piping, equipment, tools, and walking/working surfaces. The current ACGIH TLVs for cold stress found in this appendix will be used as a guideline.

APPENDIX J

JSA

JOB SAFETY ANALYSIS

GAUGE, BAIL & SAMPLE WELLS

TASK - JOB STEPS	JOB HAZARDS	CONTROL/SAFEGUARDS
Gauge,bail and sample water from monitoring wells	1. metal burr on well cap	1. wear NBR gloves
	2. toxic vapors	2. use PID/stay upwind
	3. explosive vapors	3. use LEL/ventilate
	4. static electricity	4. use grounding clip on IP
	5. muscle strain-back	5. proper posture crouch or squat, don't bend exercise and stretch use lumber support belt
	6. muscle strain-shoulder	6. use pump for large volume wells exercise and stretch, avoid over exertion, take breaks
	7. splashing liquid-eyes	7. wear PPE-splash goggles
	8. splashing liquid-skin	8. wear PPE-NBR gauntlet gloves
	9. contamination	9. proper zone set up, zone definition, etc.

JOB SAFETY ANALYSIS

OPERATIONS & MAINTENANCE

JOB STEPS	JOB HAZARDS	SAFEGUARD & PRECAUTIONS
Inspect Recovery Equipment Recovery Pump Maintenance	1. a. Splashing/Liquid Eyes b. Dermal Contact c. Toxic Vapors d. Explosion Vapors e. Static Electricity f. Muscle Strain/Back/Shoulders 2. Electrical/Pneumatic	1. a. Wear PPE Splash Goggles b. Wear PPE - NBR Gauntlet Gloves c. Monitor w/PID, FID Stay Upwind d. Ventilate/Use LEL e. Grounding/Bonding Practices use proper technique for equipment. Removal or get 2nd person - 70# rule/lifting by mechanical means 2. a. Lockout/Tagout Procedures

GSIH&S:OPSMAIN.JSA

APPENDIX K

SITE MAPS

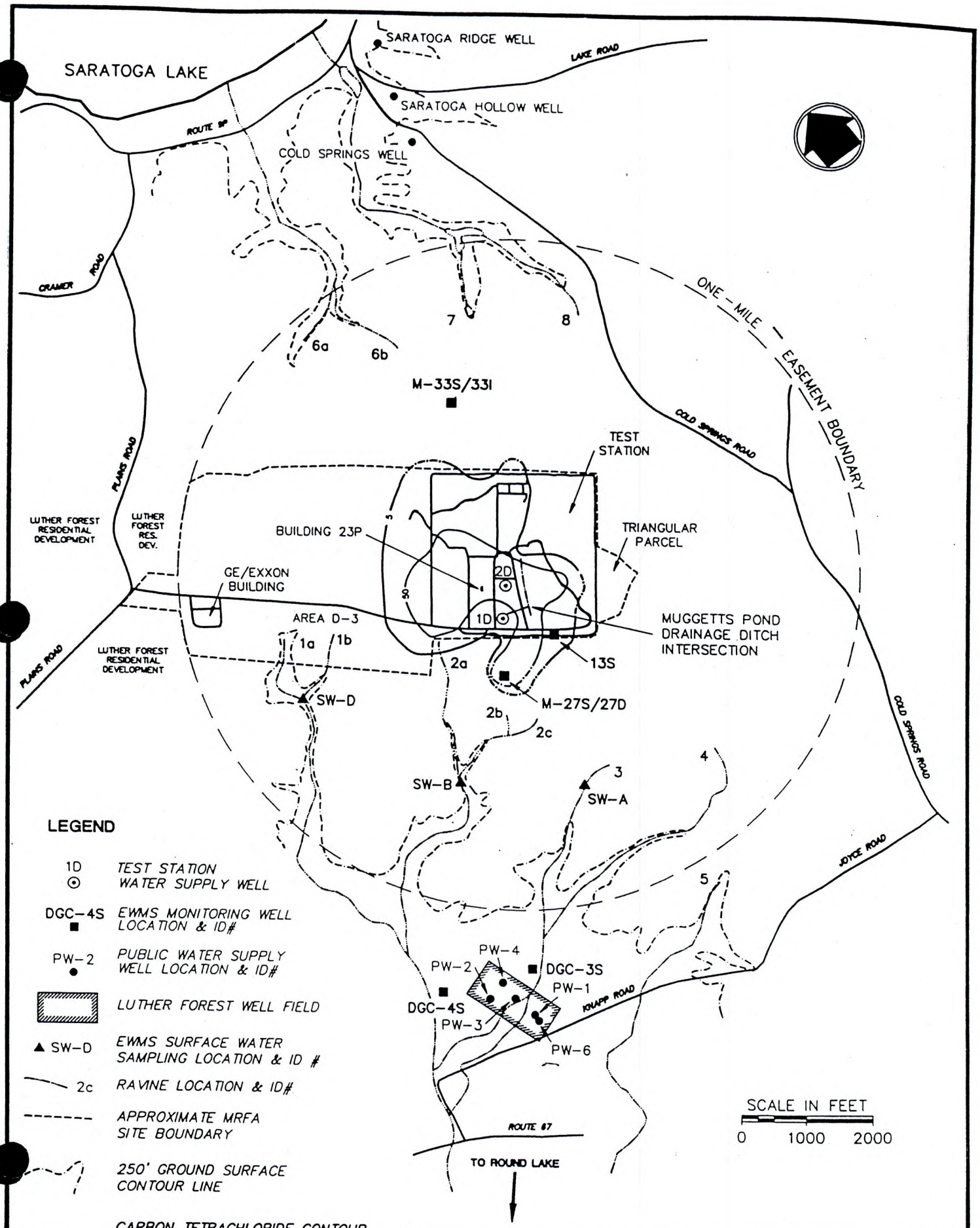

MALTA ROCKET FUEL AREA SITE	DATE	FIGURE
	11/95	1

APPENDIX L

IT CORPORATION FIELD INSPECTION FORM

INTERNATIONAL TECHNOLOGY CORPORATION

FIELD INSPECTION REPORT

PROJECT NAME _____ **DATE** _____

DATE: _____ TIME FROM: _____ TO: _____
PROJECT NAME: _____ PROJECT NUMBER: _____
PROGRAM MANAGER: _____ PROJECT MANAGER: _____
GENERAL PROJECT DESCRIPTION: _____
SITE ACTIVITIES AT TIME OF INSPECTION: _____
_____

INTERVIEWED EMPLOYEE: _____
SAFETY ISSUE: _____
CORRECTIVE ACTION: _____
_____
ASSIGNED TO: _____ FOLLOW-UP DATE: _____
CORRECTION VERIFIED: _____ DATE: _____

INTERVIEWED EMPLOYEE: _____
SAFETY ISSUE: _____
CORRECTIVE ACTION: _____
_____
ASSIGNED TO: _____ FOLLOW-UP DATE: _____
CORRECTION VERIFIED: _____ DATE: _____

INSPECTION COMPLETED BY: _____ DATE: _____

HEALTH AND SAFETY REVIEW BY: _____ DATE: _____

INTERNATIONAL TECHNOLOGY CORPORATION

FIELD INSPECTION REPORT

PROJECT NAME _____ **DATE** _____

	Not Applicable	Not* Acceptable	Acceptable		Not Applicable	Not* Acceptable	Acceptable
HEALTH AND SAFETY DOCUMENTATION				SITE CONTROL			
Tailgate Safety Meeting				Security Maintained			
Hot Work Permit				Clearly Marked Exclusion Zone			
Confined Space Entry Permit				Clearly Marked Contamination Reduction Zone			
Hospital Route Map				Clearly Marked Support Zone			
OSHA 200 Log				Sign-In/Out Log			
MSDSs				Decontamination Procedures			
Air Monitoring Logs				Client Specific Passes			
Equipment Calibration Logs				PERSONAL PROTECTIVE EQUIPMENT			
Personnel Training Records				Hard Hats			
Personnel Medical Records				Safety Glasses			
Accident Forms				Steel-Toed Boots			
[illegible]rgency Phone Numbers				Gloves			
OSHA Job Protection Posters				Hearing Protection			
IT's H&S Policies and Procedures				Traffic Vests			
Client Specific Documentation				Faceshields			
H&S Plan Acknowledgments				Chemical Resistant Coveralls			
EMERGENCY EQUIPMENT				Chemical Resistant Boots/Gloves			
First Aid Kits				Respiratory Protection			
Fire Extinguishers				Back Support Devices			
Shower/Eyewash				Chaps			
Alarm System				Lifelines/Harness			
Transport Vehicle				Welder's Hood w/Hard Hat			
Communication System				Welder's Sleeves/Leathers			
First-Aid/CPR Provider				Personal Flotation Device			

INTERNATIONAL TECHNOLOGY CORPORATION

FIELD INSPECTION REPORT

PROJECT NAME _____ **DATE** _____

	Not Applicable	Not* Acceptable	Acceptable		Not Applicable	Not* Acceptable	Acceptable
HOUSEKEEPING AND SANITATION				ELECTRICAL			
Adequate Illumination				GFCIs in Place			
Drinking Water/Disposable Cups				Lockout/Tagout Procedures			
Sanitary Facilities				Equipment UL Listed or FM Approved			
Break Area				Adequate Clearance from Overhead Lines			
General Housekeeping				Grounding and Bonding			
Walkways Clear				Qualified Electricians			
LADDERS				Uncompromised Insulation			
Regular Inspections				Utility Markouts Completed			
Secured at Top and Bottom				Switches, circuit breakers, and switchboards installed in wet locations are enclosed in weatherproof enclosures			
Side Rails Extended 3 Feet Above Top of Landing				Electric extension cords rated for hard or extra hard usage			
Ladders Not Painted				HAND TOOLS			
Step Ladders Fully Opened When in Use				Correct Tool Being Used for Job			
Safety Feet in Use				Damaged Tools Repaired or Replaced			
Rungs not Over 1 Foot on Center				All Guards in Place			
Ladder Training				Neat Storage, Safe Carrying			
Top of Step Ladder Not Used As Step				Grounded 3-Prong Plugs			
SITE MONITORING				VEHICLE/EQUIPMENT OPERATIONS			
Volatile Organics				Record of Regular Inspection and Maintenance			
Dust				Safe Driver Training			
Noise				Back-up Alarms			
Radiation				Qualified Operators			
Illumination				Proof of Insurance			
Semivolatile Organics				Wheels Chocked			
Inorganics				STAIRWAYS			
				Handrail and siderail are installed along the unprotected sides of the stairways having 4 or more risers or rising more than 30 inches.			

*Any "Not Accessible" response must be documented on the corrective action form.

INTERNATIONAL TECHNOLOGY CORPORATION

FIELD INSPECTION REPORT

PROJECT NAME _____ **DATE** _____

NOT ACCEPTABLE FINDINGS	CORRECTIVE ACTION	ASSIGNED TO	DATE ASSIGNED	DATE COMPLETED	VERIFIED BY

APPENDIX M

DAILY TAILGATE SAFETY MEETING FORM

IT CORPORATION
DAILY TAILGATE SAFETY MEETING

Project/Site:_____

Date:_____

Presented by:_____Title:_____

Topic(s)/Information Reviewed:_____

_____

_____

_____

_____

Comments/Follow-up Actions:

_____

_____

_____

_____

Sign in:

NAME	SIGNATURE	COMPANY

Instructions:

- Conduct a Daily Tailgate Safety Meeting prior to beginning each day's site activities.
- Complete form and file with Site HASP.
- Follow-up on any noted items and document resolution of any action items.

Approved by: WARREN HOUSEMAN

PROCEDURE

Subject: RESPIRATORY PROTECTION PROGRAM

1.0 PURPOSE AND SUMMARY

The purpose of this procedure is to prescribe the requirements of the company Respiratory Protection Program (RPP). This procedure provides information and guidance on the proper selection, medical evaluation, training, use, and care of respiratory protective equipment and complies with the requirements of 29 CFR 1910.134 (1998).

All operations which require the use of respiratory protection are subject to the provisions of this procedure.

2.0 TABLE OF CONTENTS

1.0 Purpose and Summary
2.0 Table of Contents
3.0 Responsibility Matrix
- 3.1 Procedure Responsibility
- 3.2 Action/Approval Responsibilities

4.0 Definitions
5.0 Text
- 5.1 Assignment of Equipment to Contractor/Labor Pool Personnel
- 5.2 Approval, Selection, and Purchase of Respiratory Protective Equipment
  - 5.2.1 Approval
  - 5.2.2 Selection
  - 5.2.3 Purchase
- 5.3 Medical Evaluation
- 5.4 General Program Requirements
  - 5.4.1 Responsibilities
  - 5.4.2 Use of Corrective Lens Eyewear
  - 5.4.3 Obstruction of Face Seal
- 5.5 Instruction, Training, and Fit Test
  - 5.5.1 Instruction and Training
  - 5.5.2 Fit Testing
- 5.6 Maintenance Program
  - 5.6.1 Inspection for Defects
  - 5.6.2 Cleaning and Disinfecting
  - 5.6.3 Repair
  - 5.6.4 Storage
- 5.7 Field Use

5.7.1 General Requirements
5.7.2 Specific Requirements
5.7.3 IDLH Atmospheres
5.8 Recordkeeping
5.9 Program Evaluation
6.0 Exception Provisions
7.0 Cross References
8.0 Attachments

3.0 RESPONSIBILITY MATRIX

3.1 Procedure Responsibility

The Vice President, Health and Safety is responsible for the issuance, revision, and maintenance of this procedure.

3.2 Action/Approval Responsibilities

Program responsibilities are detailed throughout this procedure. The Responsibility Matrix summarizes these items and can be found as Attachment 1.

4.0 DEFINITIONS

Action Level (AL) - Airborne contaminant concentration which is one-half of the Permissible Exposure Guideline (PEG).

Air Purifying Respirator (APR) - Negative pressure respirator (also referred to as a cartridge respirator) which filters contaminated air through chemical or mechanical filter elements. APRs include: cartridge, canister, gas masks, and single-use respirators.

Approved Respirator - Any respirator, identified by manufacturer and model, that has been approved by NIOSH 42 CFR Part 84 and has been incorporated into the List of Approved Respiratory Protective Equipment (Attachment 2).

Assigned Protection Factor (APF) - A term that is reserved in the OSHA Standard 1910.134 (January, 1998). Until this term is defined, the term fit factor (FF) will be used in its place.

Company - All wholly-owned subsidiaries of The IT Group, Inc.

Contractor Personnel - A group of persons hired to perform a specific activity based on their expertise and ability to operate independent of direct supervision. Contractor personnel are supervised by their management group which reports to an employee of the company for project direction.

End-of-Service-Life Indicator (ESLI) - A system that warns the respirator user of the approach of the end of adequate respiratory protection, for example, that the sorbent is approaching saturation or is no longer effective.

Emergency - Emergency means any occurrence such as, but not limited to, equipment failure, rupture of containers, or failure of control equipment that may or does result in an uncontrolled significant release of an airborne contaminant.

Exposure Limit - Several published airborne contaminant concentration values exist which are used in establishing acceptable personnel exposures to contaminants. OSHA publishes the Permissible Exposure Limit (PEL), NIOSH publishes the Recommended Exposure Limit (REL), and the ACGIH publishes the Threshold Limit Value (TLV). All of these exposure limits are based on an 8-hour work shift, 40-hour work week, and 40-year work life. The values may vary from contaminant to contaminant as well as between publishing bodies.

Field Office - Any office or satellite office performing field activities which may require the use of respiratory protection.

Filtering Facepiece (Dust Mask) - A negative pressure particulate respirator with a filter as an integral part of the facepiece or with the entire facepiece composed of the filtering medium.

Fit Factor (FF) - This term means a quantitative estimate of the fit of a particular respirator to a specific individual and typically estimates the ratio of the concentration of a substance in ambient air to its concentration inside the respirator when worn.

Currently, fit factor is interchangeable with the previously used term of **Assigned Protection Factor**. Attachment 2 provides FFs for the List of Approved Respiratory Protective Equipment. The company will continue to use the APFs established by NIOSH until OSHA issues their definition of APF.

HASP - Health and Safety Plan.

Health and Safety Professional - A member of the company Health and Safety Functional Resource Group who, through professional credentials, training, or experience, has the necessary qualifications and authority to specify respiratory protection and evaluate respiratory protection program elements.

Immediately Dangerous to Life or Health (IDLH) - An atmosphere that poses an immediate threat to life, would cause irreversible adverse health effects, or would impair an individual's ability to escape from a dangerous atmosphere.

Labor Pool Personnel - Temporary personnel hired for a given expertise or ability. Labor pool personnel report directly to an employee of the company.

Nuisance Level - Level of airborne contaminants which is below one-half the action level for that contaminant and presents no other health or safety hazard.

Permissible Exposure Guideline (PEG) - This term designates a specific exposure limit and is based on the best available information. The PEG will be the lower (more protective) of the values for the PEL and TLV. However, the REL shall take precedence for Hazardous Waste Operations (subject to 29 CFR 1910.120 or 1926.65) if no PEL exists, or for contaminants where no PEL or TLV exists. If

there is no PEL, TLV, or REL, a Health and Safety Professional shall determine an appropriate permissible exposure guideline.

Permissible Exposure Limit (PEL) - An occupational exposure index promulgated by OSHA which carries the force of law. This value represents the allowable concentration to which it is believed an employee may be exposed to 8 hours a day, 40 days a week, for a 40-year working life without experiencing adverse health effects.

Positive Pressure Respirator - A respirator in which the pressure inside the respirator exceeds the ambient air pressure outside the respirator.

Powered Air Purifying Respirator (PAPR) - A positive pressure APR which incorporates a fan an battery pack unit. The system pulls contaminated air through the filter elements before delivery to the facepiece under positive pressure. Air pressure in the mask must remain above ambient pressure.

Qualitative Fit Test - A procedure for assuring that the respirator provides adequate protection based on a pass/fail fit test that relies on the individual's response to the test agent. Standard fit test protocol will utilize the irritant smoke methods as described in Attachment 4.

Quantitative Fit Test - A fit test that provides an assessment of the adequacy of respirator fit by numerically measuring the amount of leakage into the respirator.

Respiratory Protection Program Coordinator (RPP Coordinator) - A person designated by the Health and Safety Professional to administer and supervise the respiratory program at a local facility or project location. This person will have the necessary training or credentials to execute this task.

Recommended Exposure Limit (REL) - An occupational exposure index published by NIOSH which is a recommended guideline for employee protection. This value represents the allowable concentration to which it is believed an employee may be exposed to 10 hours a day, 40 hours a week, for a 40-year working life without experiencing health effects.

Supplied Air Respirator (SAR) - Positive pressure respirator which supplies an independent source of breathing air to the user. Two types of SARs are available: self-contained breathing apparatus (SCBA) and airline.

Threshold Limit Value (TLV) - An occupational exposure index published by ACGIH which is recognized as an industry guideline and represents the concentration to which it is believed that nearly all employees may be exposed to 8 hours a day, 40 hours a week without experiencing adverse health effects.

5.0 TEXT

The company will employ engineering controls (e.g., enclosure, ventilation, material substitution, etc.) as the primary method to limit employee exposure. However, for those situations where engineering and administrative controls are ineffective at controlling employee exposure, the use of respiratory protective equipment may be required.

This RPP provides specific requirements for selection, assignment, training, and medical evaluation for persons expected to wear respiratory protection.

5.1 Assignment of Equipment to Contractor/Labor Pool Personnel

Contractor personnel shall provide their own respiratory protective equipment and shall also confirm meeting all other requirements of their own RPP and that of the company's RPP (i.e., medical clearance, training, etc.).

The company will provide the following respiratory protective equipment to Contractor Personnel:

- Disposable equipment such as filter elements or respirator systems designed for single use.
- Hardware for airline systems (up to, but not including, the airline and facepiece) which employees are sharing.

The company will not provide the following respiratory protective equipment to Contractor Personnel:

- APR or PAPR facepieces.
- SCBAs, SAR respirators, and airline.

The company may provide respiratory protective equipment to Labor Pool Personnel if the following have been established:

- The labor pool personnel have successfully completed training as required by 29 CFR 1910.120 and 29 CFR 1920.134.
- The labor pool personnel have been fit tested in relation to projected exposure levels and contaminants to be encountered.
- The labor pool personnel have been medically approved to wear respirators.
- All other RPP requirements have been met.

5.2 Approval, Selection, and Purchase of Respiratory Protective Equipment

The following requirements are designed to guide correct selection of respiratory protective equipment.

5.2.1 Approval

The Vice President, Health and Safety has approved respirators manufactured by Survivair as the primary respirators for use by employees. For employees who cannot achieve a satisfactory fit or comfort factor in Survivair respirators, Mine Safety Appliance (MSA) respirators will be selected. The list of approved model respirators is included in Attachment 2.

Contractor personnel may select any respiratory protective equipment that has received approval from NIOSH. The company will only provide filter elements for the type of respiratory protection used by employees at that location.

5.2.2 Selection

The Health and Safety Professional shall select respiratory protective equipment based upon the information obtained from the hazard assessment. The hazard assessment may utilize written information such as the NIOSH Pocket Guide to Chemical Hazards, Material Safety Data Sheets, analytical data, or air monitoring information. The selection process shall incorporate the following guidelines:

- Respirators are to be selected by Health and Safety Professionals only. The type of respirator selected will be documented in the Project HASP.

- Selection of the appropriate respiratory protective equipment shall include factors such as the chemical state and physical form of the chemical contaminant, atmospheric concentration during routine and emergency events, potential physical hazards, expected job task requirements, and the performance of the respirator in providing the appropriate level of protection against these hazards.

- Consideration shall be given to the nature of the hazardous operation, location of the hazardous area relative to nonhazardous breathing air supply, duration of wear, activities to be performed, and characteristics and function of the respiratory protective equipment to be worn.

- Selected respirators (i.e., Survivair or MSA) shall be NIOSH certified and used in compliance with the conditions of its certification when employees are exposed to toxic materials or other hazardous atmospheres.

- Proper selection of respirators shall be made according to the guidance of American National Standards Institute (ANSI) Practices for Respiratory Protection Z88.2-1992 (or most recent publication) or NIOSH Decision Logic for Respiratory Selection. A copy of the NIOSH Decision Logic for Respiratory Selection is provided in Attachment 3 for use by the Health and Safety Professional in determining appropriate respiratory protection.

- Respirators must provide adequate face and eye protection for the expected task.

- If an APR is used, the respirator shall be equipped with an end-of-service life-indicator (ESLI) certified by NIOSH for the contaminant. If an ESLI is not available for the contaminant, a cartridge element change schedule shall be implemented which is based on objective information or data that

will ensure that canisters and cartridges are changed before the end of their service life. This information will be described in the HASP.

- The FF for the respirator selected (Attachment 2) shall be used according to the following relationship with the PEG to establish justification for the protection provided by the selected respirator:

  FF x PEG > Maximum anticipated contaminant concentration

  If this equation is false, a respirator with a greater FF must be selected. The Health and Safety Professional may determine that a more conservative approach (e.g., 50 percent FF) may be needed. Decision to do so should be documented in the Project HASP.

- Manufacturer-established limitations of the APR filter elements relative to the contaminants of concern shall be used to establish further justification for the selected respirator should the APR's FF not disqualify its use (e.g., maximum anticipated contaminant concentration).

5.2.3 Purchase

The purchase request of respiratory protective equipment (including cartridges, airlines, compressed air) should be reviewed by the Health and Safety Professional to indicate that the ordered material meets policy and project requirements. **Under no circumstances may anyone (purchasing, warehouse, project manager, etc.) purchase or provide other than the specific respiratory protection equipment selected by the Health and Safety Professional.**

5.3 Medical Evaluation

No employee shall be assigned to a task that requires the use of a respirator unless it has been determined that he/she is physically able to perform the work while using the required respirator. The medical evaluation must be conducted prior to fit testing and work requiring the use of respiratory equipment.

The medical evaluation shall be performed by a physician typically in conjunction with a physical examination meeting the requirements of 29 CFR 1910.120 (f) *Medical Surveillance*. The physician will be informed of the type of work expected of the employee, the types of respiratory protection and personal protective equipment required, and other information indicating the expected stresses of the task. For employees not required to enter a HAZWOPER medical surveillance program, the physician shall be provided information on the employee's work duties, the types of respiratory protection and personal protective equipment required, and other information indicating the expected stresses of the task.

The physician shall be given a copy of the company RPP and a copy of 1910.134 (e) *Medical Evaluation*.

The physician shall provide a written recommendation regarding the employee's ability to use respiratory protection. The company shall ensure that the physician supplies the employee with a copy of this recommendation.

Additional medical evaluations will be provided to the employee if:

- Any medical signs or symptoms due to respirator use are reported by the employee.
- Any medical signs or symptoms due to respirator use or fit testing are noted by supervisory or health and safety personnel.
- A change in workplace conditions (e.g., physical work effort, protective clothing, temperature) that may result in a substantial increase in the physiological burden placed on an employee.

5.4 General Program Requirements

5.4.1 Responsibilities

The following information describes the responsibilities for the selection, use, and maintenance of respiratory protective equipment based upon job function:

Management

- Management shall take necessary and cost-effective measures to reduce, where possible, the need for respiratory protective equipment (e.g., enclosed cabs on heavy equipment to reduce airborne dust, operations performed upwind, etc.)
- Respiratory protective equipment shall be provided by management whenever it is determined that such equipment is necessary to protect the health of the employee or when requested by an employee and approved by the Health and Safety Professional.
- Management shall assign work tasks requiring the use of respiratory protective equipment to only those employees who are medically qualified to wear respiratory protective equipment.
- Management shall train employees in the use of respirator protection prior to their use.
- Management shall provide the means for the maintenance of respiratory protection as required.
- Management shall provide respirators to the Training Department and Health and Safety Professional to issue to field personnel.

Health and Safety Professional

- Health and Safety Professionals shall determine appropriate respiratory protection for each job. The decision logic for this selection shall be documented in the Project HASP.

- Health and Safety Professionals shall monitor compliance with the various aspects of this program, provide technical assistance regarding respirator selection and use, evaluate the effectiveness of the RPP, and support respirator training and fit testing at locations under their control.

- Health and Safety Professionals shall conduct regular audits to determine compliance with this procedure. This audit can include a review of maintenance, training, medical and air monitoring records, and review the status of this procedure with regard to current regulatory requirements.

- Health and Safety Professionals shall maintain or oversee maintenance of all other records required by this RPP and shall provide for the training and fit testing of personnel assigned respiratory protective equipment.

- Health and Safety Professionals shall appoint a RPP Coordinator for each location which uses or may have a need to use respiratory protection. The Health and Safety Professional must assure the RPP Coordinator has the necessary training to fulfill his/her responsibilities.

RPP Coordinator

- The RPP Coordinator shall be responsible for cleaning, maintenance, and storage of all respirators not routinely used or not individually assigned.

- The RPP Coordinator shall maintain respirator supplies, including spare parts; submit purchase requests for new equipment; and assure that sufficient quantities of cartridges are available for each field office/ project.

- The RPP Coordinator shall assure that air supply and emergency respiratory protection is properly inspected and maintained.

- Respirators shall be repaired by either qualified personnel under the direction of the RPP Coordinator, or by contracted supplier.

- The RPP Coordinator shall maintain models and sizes of APRs available for selection and fitting.

- The RPP Coordinator shall conduct fit testing.

Training Department

- Records pertaining to training and fit testing will be maintained by the Training Department.

Employee

- The employee shall use the provided respiratory protective equipment when instructed to do so in accordance with training received.
- The employee shall clean, disinfect, and properly store the assigned respirator, unless other arrangements are made on a project level.
- The employee shall guard against damage to the assigned respirator.
- The employee shall inspect the respirator before each use and after cleaning.
- The employee shall report any malfunction of the respirator immediately to their supervisor and/or the RPP Coordinator.
- The employee shall report to their supervisor any change in their medical status that may impact their ability to wear a respirator safely.

5.4.2 Use of Corrective Lens Eyewear

- Contact lenses are permitted to be worn when respiratory protection is used. Note: Other project-specific rules may prevent the use of contact lenses.
- If an employee chooses not to wear contact lenses, management shall assure that the appropriate frames or ophthalmic device attachments are obtained and provided at company expense.

5.4.3 Obstruction of Face Seal

Employees who wear respirators are required to be clean shaven to the extent that there is no obstruction between the wearer's skin and the facepiece. Trimmed mustaches and facial hair which does not interfere with the seal are allowable.

In addition, respirators shall not be worn when conditions prevent a good face-to-facepiece seal such as sideburns, a skull cap that projects under the facepiece, temple pieces on corrective lenses or goggles, and/or the absence of one or both dentures.

5.5 Instruction, Training, and Fit Test

5.5.1 Instruction and Training

The Training Department shall provide a standard respiratory protective equipment training program for use by qualified personnel such as the Health and Safety Professional or RPP Coordinator. The Training Department shall approve all training formats if these vary from the standard respiratory protective equipment training.

The Training Department will support training at the project location if the project does not have the qualified personnel and/or the equipment to support its own program. As an alternative, the project location may use a respiratory manufacturer's training program if the program meets company requirements, a competent person conducts the training, adequate equipment is available for demonstration, and fit testing is conducted along guidelines established in this procedure. The Training Department must approve all alternative training methods.

The basic respirator training program shall include, as a minimum, the following:

- Training and annual retraining of employees in the selection, use, maintenance, and limitation of each respirator type used.
- Instruction on the nature of the respiratory hazards and potential health effects resulting from exposure.
- Opportunity for "hands on" experience with the respiratory protective equipment.
- Proper fitting, including demonstrations and practice in wearing, adjusting, and determining the fit of the respirator. A selection of respirators shall be available to determine the most comfortable respirator and the best fit.
- Instruction on how to perform a negative and positive pressure test of the face-to-facepiece seal.
- A familiarization period of wear in ambient air.
- For APRs, wearing the respirator in a test atmosphere (typically irritant smoke) for qualitative fit testing. The qualitative fit test shall follow the guidelines outlined in Section 5.5.2.
- Training to recognize and cope with emergency situations (including respirator failure)

- Training and fit testing shall be repeated annually, unless specific OSHA regulations require a more frequent time period (e.g., asbestos, lead operations). Each person receiving training shall complete the Respirator Fit Test Form (Attachment 5).

- Training records will be maintained by the Training Department and the location Health and Safety Professional. On-site records of training and fit testing will be maintained as required by specific regulation (e.g., asbestos work) (refer to Section 5.8).

- It is the responsibility of the RPP Coordinator to verify that all project personnel meet the requirements of this RPP.

5.5.2 Fit Testing

Prior to the use of any negative or positive pressure tight-fitting facepiece, the employee must be fit tested.

- All employees assigned to operations requiring the use of respiratory protective equipment shall have been fit tested within 12 months, or as required by specific regulations (e.g., asbestos, lead operations). Fit test and qualification cards (or a copy of the completed Attachment 5) must be available during operations.

- The employee shall be fit tested with the same size, style, and model as they are expected to wear.

- Qualitative fit test (QLFT) shall be used when a fit factor of 100 or less is required.

- Quantitative fit test (QNFT) shall be used when a fit factor of greater than 100 is required. When executing the QNFT, the acceptable test result is 100 for tight fitting half-facepiece respirators and 500 for full-facepiece respirators.

- Fit testing for tight-fitting atmosphere supplying respirators and tight-fitting APRs shall be in a negative pressure mode regardless of the mode of operation that is used for respiratory protection.

- Assessment of comfort shall be made after allowing adequate time for this evaluation. This evaluation shall include reviewing the following points with the employee: positioning of the mask on nose, room for eye protection if required, room to talk, and positioning of the mask on the face and cheeks.

- The following criteria shall be used to help determine the adequacy of the respirator fit: chin properly placed, strap tension, fit across the nose bridge, and tendency to slip.

- If physical obstruction (e.g., facial hair, eyeglasses) interferes with the face-to-facepiece seal, then it shall be altered or removed so as to eliminate any interference and allow for a satisfactory fit. If the employee refuses to alter the physical obstruction, then they shall be denied a satisfactory fit report and referred to his/her supervisor for consideration.

- The fit test protocol (Attachment 4) shall be followed. The Health and Safety Professional and Training Department shall determine which fit test protocol shall be followed depending upon the situation.

5.6 Maintenance Program

Each RPP Coordinator is responsible for verifying the respirator maintenance program is implemented in an effective manner for the facility or project site, the working conditions, and the potential hazards involved. As a minimum, the following aspects must be implemented:

- Inspection for defects
- Cleaning and disinfecting
- Repair
- Respirator storage
- Inspection and repair documentation, as required
- Compliance with manufacturer recommendations.

Detailed information regarding cleaning, inspection, maintenance, and storage is found in Attachment 7. The RPP Coordinator shall verify compliance with the maintenance program by periodic inspections and field audits.

5.6.1 Inspection for Defects

- All respiratory protective equipment systems shall be inspected by the wearer for defects and/or deterioration immediately prior to and after each use.

- Any defects shall be reported to their supervisor immediately and the respirator removed from use until it can be repaired or replaced.

- Respiratory protective equipment systems not used routinely (including all SCBAs and equipment designated only for emergency use) shall be inspected before and after each use and at least every 30 days. Cylinders shall be recharged whenever the pressure falls below 90 percent on the manufacturer's recommended pressure level. This inspection shall be documented by some method on the unit (i.e., tag). Records of inspections shall be kept through appropriate documentation. Attachment 6 provides an example of inspection documentation for SCBAs. At a minimum, these records will include: date, inspector, and any unusual finding or condition. Any repairs or modifications shall be documented in detail.

- General field inspection shall include a check of the following: tightness of all connections, facepiece, valves, and any connecting tubes or filtering elements.

- Specific inspection procedures are outlined in Attachment 7.

- Employees who are manufacturer-qualified repair technicians shall be used for all maintenance beyond field inspections, tests, and user-performed cleaning.

- Air supplied respiratory systems shall be inspected by a manufacturer's authorized representative at the manufacturer's recommended schedule. Manufacturers typically require an annual flow test and a complete overhaul every 5 to 7 years.

5.6.2 Cleaning and Disinfecting

Employees maintaining their own respirators shall be thoroughly briefed on how to clean and disinfect them. On projects where employees clean their own respirator, the generally accepted procedure involves washing with detergent and warm water using a soft brush, thoroughly rinsing in clean water, drying in a clean place, and storage in sealed plastic bags or equivalent. Precautions to be taken to prevent damage from rough handling during this procedure are detailed in Attachment 7.

At locations where employees share respirators, a centralized cleaning and maintenance facility with specialized equipment and/or materials and personnel trained in respirator maintenance must be established. Cleaning and inspection is primarily the responsibility of the user.

5.6.3 Repair

The company will only use respiratory protective equipment that is physically sound.

- If defects are found during any inspection, two remedies are possible. If parts and trained personnel are available, repair and/or adjustment may be made immediately. If parts or trained repair people are unavailable, the device shall be removed from service until it can be repaired. Under no circumstances shall a device that is known to be defective remain in service.

- Replacement or repair shall be done by adequately trained personnel. For negative pressure respirators, the Health and Safety Professional or RPP Coordinator may train or supervise personnel in the replacement of items such as inhalation/exhalation valves, head harness, cartridge adapters, and lenses. The respirator should be tested by either a positive pressure/negative pressure fit test, irritant smoke, or isoamyl acetate prior to being returned to service. For air-supplied respirators, field repairs are limited to replacement of head harness and lenses. All other work must be completed by a factory-certified repair person.

Repair shall only be made with parts designed for the respirator. Substitution of parts from a different brand or type invalidates the respirator's approval and is prohibited.

5.6.4 Storage

Respirators must be stored to protect against dust, sunlight, heat, extreme cold, excessive moisture, damaging chemicals, and mechanical damage.

- Respirators shall be stored in such a manner that the facepiece, exhalation valve, and straps are not distorted.

- Respirators shall be stored in sealable containers (e.g., ziplock bags) after cleaning and disinfecting.

- The storage location of emergency respiratory protection shall be readily accessible and prominently identified.

- Respirators shall be stored in an area free of contamination.

5.7 Field Use

The following guidelines for the use of respirators (or equivalent) shall be incorporated into the Project HASP as appropriate. Additional guidelines may be required based on working conditions and hazards involved. Each location where respiratory protective equipment is required or worn shall include in the Project HASP justification for the selected respiratory protective equipment systems worn as outlined in Section 5.2 of this procedure.

5.7.1 General Requirements

The following general requirements shall be followed whenever respiratory protection is used:

- Employees shall be allowed to leave the regulated area to readjust the facepiece or to wash their faces and to wipe clean the facepieces of their respirators in order to minimize potential skin irritation associated with respirator use.

- Respiratory protective equipment shall not be passed on from one person to another until it has been cleaned and sanitized, per program requirements.

- Respirators will be inspected, and a positive/negative pressure test performed prior to each use.

- Entry into oxygen-deficient (< 20 percent O_2) atmospheres, Immediately Dangerous to Life and Health (IDLH) atmospheres, or areas requiring EPA Level A protection is prohibited without the prior approval of the Vice President, Health and Safety or the CIH assigned to the business line.

- Head coverings such as Tyvek hoods shall not be allowed to pass between the face-to-facepiece seal.

- The harness straps of tight-fitting respirators shall not be positioned or worn over hard hats.

5.7.2 Specific Requirements

The following information details specific requirements by respirator class:

Air Purifying Systems

- When APRs are worn, new filter elements shall be installed at the beginning of operations. The filter elements shall be changed whenever the ESLI (color indicators) indicates that cartridge life has expired (e.g., mercury cartridges). When no ESLIs are available, filter replacement will be based on the calculations performed by the Health and Safety Professional. Additionally, the cartridges will be replaced if "breakthrough" is perceived or whenever an increase in breathing resistance is detected. In most cases, the cartridges will be replaced a minimum of once daily, usually at the end of the work shift.

Powered Air Purifying Systems

- When PAPRs are worn, employees shall change filter elements after each day's activities. The filter elements shall be changed whenever the ESLI

(color indicators) indicates that cartridge life has expired (e.g., mercury cartridges). When no ESLIs are available, filter replacement will be based on the calculations performed by the Health and Safety Professional. Additionally, the cartridges will be replaced if "break-through" is perceived or when airflow through filter elements decreases to an unacceptable level as indicated by the manufacturer's test device.

Compressed Air

- Compressed air used for breathing shall meet at least the requirements of the specification for Grade D breathing air or better (D, E, or G; not A, K, or L) as described in the American National Standard Commodity Specification for Air, ANSI/CGA G-7.1-1989. Further information is provided in Attachment 7, Guide to Respiratory Protective Equipment Cleaning, Inspection, Maintenance, and Storage.

- Breathing air suppliers must provide certification of analysis stating conformance, as a minimum, to Grade D breathing air standards as previously referenced for each cylinder and/or air lot.

- Air delivered in bulk, e.g., tube trailers, shall have each tube or unit, or a representative number of tubes or units verified as to oxygen content prior to using that tube.

- Pure oxygen shall NOT be used at any time in open-circuit SCBAs or airline respirators.

- Breathing air cylinders shall be legibly identified with the word "AIR" by means of stenciling, stamping, or labeling as near to the valve end as practical.

- Breathing air cylinders may be stored on their sides provided the valve caps are in place.

Supplied Air Breathing Systems

- Airline couplings shall be incompatible with outlets for other gas systems to prevent inadvertent servicing of airline respirators with nonrespirable gases or oxygen.

- Standard airline couplings for breathing air systems are Foster quick connect fittings with locking dots. Hansen quick connect fitting may also be used, but must not be used where they can be inadvertently actuated and disconnected. For example, Hansen fittings could be used at the regulator connection, but not on the airline unless protected from disconnection by some other means.

- The hose line length shall not exceed 300 feet from the air bank regulator to the user.

- No more than three connections, excluding the connection to the regulator and final connection to the respirator, shall be between the breathing air cylinders and the user.

- Breathing air hose shall be protected from direct contact with chemical materials which may permeate the hose. Acceptable methods of protection include suspension of the hose from the surface or covering with a commercially available sleeve or visqueen. Breathing air hose which has become contaminated will be removed form service and disposed of properly.

- The breathing air regulator shall be adjusted to provide between 50 to 125 psi pressure.

- Cascade systems shall be equipped with low pressure warning alarms or similar warning devices to indicate air pressure in the manifold below 500 psi.

- When a cascade system is used to supply breathing air, a worker outside the Exclusion Zone shall be assigned as safety standby within audible range of the low pressure alarm.

- When a cascade system is used to recharge SCBA air cylinders, it shall be equipped with a high-pressure supply hose and coupling rated at a capacity of at least 3,000 psi. The supply hose and coupling shall be relatively short ($\leq$ 3 feet) and secured to prevent whipping when pressurized.

- Air cylinders shall be stored and handled to prevent damage to the cylinder or valve. Cylinders shall be stored upright with the protective valve cover in place and in such a way (e.g., supported with substantial rope or chain in the upper one-third of the cylinder, or in racks designed for the purpose) as to prevent the cylinder from falling. Cylinders shall not be dropped, dragged, rolled, or allowed to strike each other or to be struck violently. Cylinders shall never be exposed to temperatures exceeding 125°F. Cylinders with visible external damage, evidence of corrosion, or exposure to fire shall not be accepted or used.

- Only cylinders within current hydrostatic test periods shall be used. For fiber wrapped bottles designated by the DOT-E label, hydrostatic testing shall be completed every 3 years. Maximum service life for these cylinders is 15 years. Steel or aluminum cylinders shall be

hydrostatically tested every 5 years. No maximum service life is established for steel or aluminum cylinders.

- SCBAs shall only be used in the positive pressure mode when in the Exclusion Zone.

- Standby SCBA equipment must be present when air supply systems are used in IDLH or potentially IDLH atmospheres.

Escape/Egress Units

- These respirators are intended for use in areas where escape with a short-term (5 minute) air supply is necessary. They may be used as adjuncts to airline respirators as a backup air supply, or as independent emergency devices in areas where respiratory protective equipment is not normally required.

- Appropriate training shall be accomplished and documented prior to assigning employees to tasks or locations subject to the use of these respirators.

- Escape/egress units (5-minute air supply) shall never be used as primary standby respirators for confined space entry.

- Escape/egress units shall never be used to enter, or continue working in, a hazardous atmosphere.

5.7.3 IDLH Atmospheres

For all IDLH atmospheres, the company shall ensure that:

- One employee or, when needed, more than one employee is located outside the IDLH atmosphere.

- Visual, voice, or signal line communication is maintained between the employee(s) in the IDLH atmosphere and the employee(s) located outside the IDLH atmosphere.

- The employee(s) located outside the IDLH atmosphere are trained and equipped to provide effective emergency rescue.

- The employer or designee is notified before the employee(s) located outside the IDLH atmosphere enter the IDLH atmosphere to provide emergency rescue.

- The employer or designee authorized to do so by the employer, once notified, provides necessary assistance appropriate to the situation.

- Employee(s) located outside the IDLH atmosphere are equipped with:
  - Pressure demand or other positive pressure SCBAs, or a pressure demand or other positive pressure supplied air respirator with escape/egress unit.
  - Appropriate retrieval equipment for removing the employee(s) who enter(s) these hazardous atmospheres where retrieval equipment would contribute to the rescue of the employee(s) and would not increase the overall risk resulting from entry. Equivalent means of rescue can be considered.

5.8 Recordkeeping

The following documents must be part of the site recordkeeping program:

- Employees' medical clearances for respirator use
- Respirator training and fit testing forms
- Respirator inspection and maintenance documentation.

5.9 Program Evaluation

This RPP shall be reviewed annually at the direction of the Vice President, Health and Safety.

6.0 EXCEPTION PROVISIONS

Variances and exceptions may be requested pursuant to the provisions of Procedure HS013, Health and Safety Procedure Variances.

7.0 CROSS REFERENCES

Title 29, Code of Federal Regulations, Section 1910.134.

AIHA, ***Respiratory Protection, A Manual and Guideline***, 1980.

American National Standards Institute Practices for Respiratory Protection Z88.2-1992 (or most recent publication)

NIOSH, ***Certified Equipment List*** (most recent version)

Company Health and Safety Procedures:

HS013	Health and Safety Procedure Variances
HS040	Stop Work Authority
HS050	Training Requirement
HS052	Health and Safety Plans
HS102	Management of Employee Exposure and Medical Records
HS104	Employee Notification of Industrial Hygiene Monitoring Records

HS300	Confined Spaces
HS304	Compressed Gas Cylinders
HS600	Personal Protective Equipment

8.0 ATTACHMENTS

1. Responsibility Matrix
2. List of Approved Respiratory Protective Equipment
3. Decision Logic for Respiratory Protective Equipment Selection
4. Mandatory Respirator Fit Test Protocol
5. Respirator Fit Test Form
6. Emergency Respiratory Protective Equipment Monthly Inspection Checklist
7. Guide to Respiratory Protective Equipment Cleaning, Inspection, Maintenance, and Storage

ATTACHMENT 1

RESPIRATORY PROTECTION PROGRAM RESPONSIBILITY MATRIX

Action	Procedure Section	*Responsible Party*						
		Employee	Line Mgmt.	Local Health and Safety	Project/ Location Manager	Health and Safety Prof.	Vice President Health and Safety	Training
Establish List of Approved Respirators	5.2.1						X	
Assure Proper Selection of Respirators	5.2.2			X		X		
Assure Compliance with RPP	5.4		X	X	X			
Assure Training	5.4		X	X	X	X		
Audit Program Compliance	5.4		X	X		X	X	
Assist/Approve Local Training Program	5.4							X
Maintenance Program	5.6	X	X	X	X			
Field Use	5.7	X	X	X	X			
Recordkeeping	5.8	X	X	X		X	X	X
Program Evaluation	5.9						X	

ATTACHMENT 2

LIST OF APPROVED RESPIRATORY PROTECTIVE EQUIPMENT

Respirator Class	Respirator Type	Respiratory Performance	Manufacturer	Model Name	Model Number
AIR PURIFYING RESPIRATORS (APR)					
Standard APR	Half-Face	Negative Pressure	Survivair	Blue 1	2100-10 S 2200-10 M 2300-10 L
			MSA	Comfo II	479529 S 479428 M 479530 L
	Full-Face	Negative Pressure	Survivair	20/20	202062 S 202072 M 202082 L
			MSA	Ultra Twin	480263 S 480259 M 480267 L
Powered APR	Hood	Continuous Positive Pressure	Survivair	PAPR	5200-15
			MSA	Optimair 6	480251 S 480247 M 480255 L
SUPPLIED AIR RESPIRATORS (SAR)					
Airline SAR	Full-Face	Positive Pressure Demand	Survivair	Panther	P968455
			MSA	Premaire	497291
SCBA SAR	Full-Face	Positive Pressure Demand	Survivair	Cougar	P 9643310
			MSA	MMR WorkMask 2216	Varies on Components
Emergency	Escape/Egress Unit	Continuous Flow	Survivair	5 min. EEBA	9750870
			MSA	Custom Air V	484353

ATTACHMENT 3

DECISION LOGIC FOR RESPIRATORY PROTECTIVE EQUIPMENT SELECTION

Flow Chart of Respirator Decision Logic Sequence

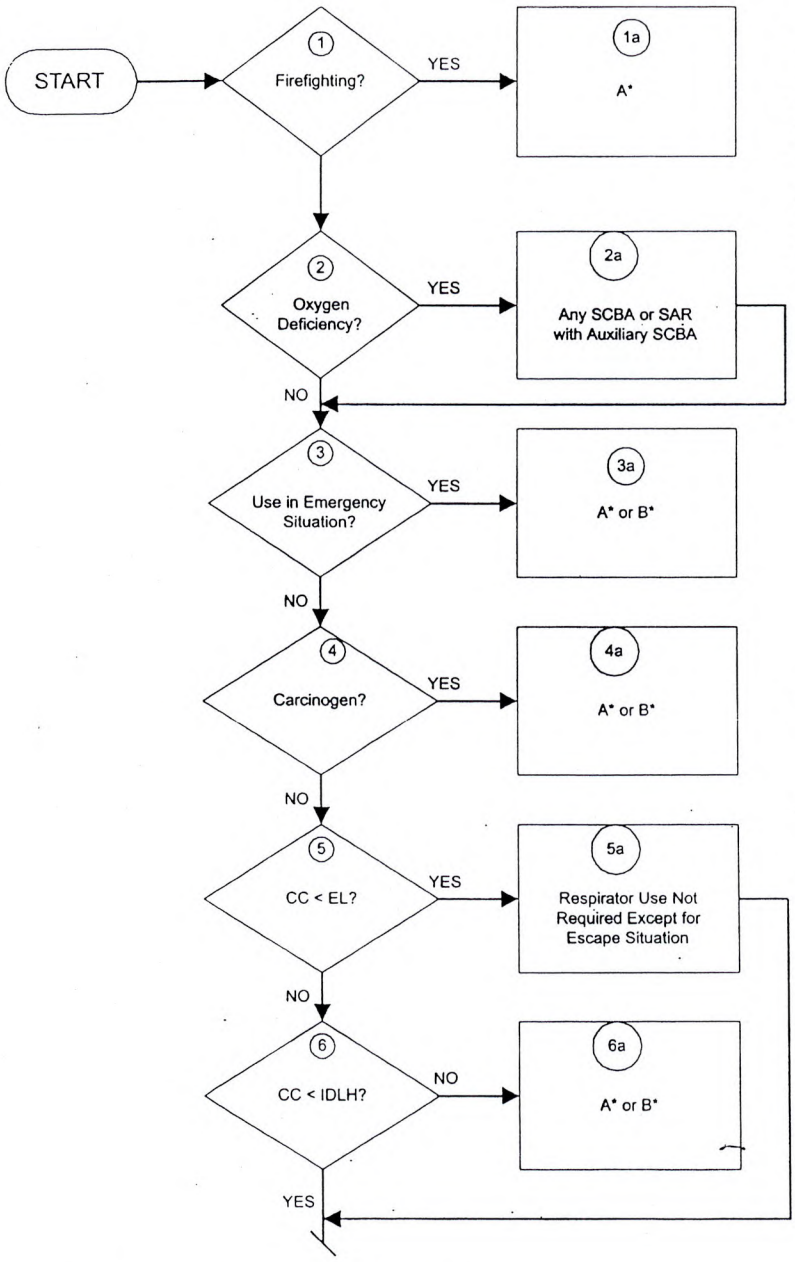

The Respirator Decision Logic Sequence is presented in the form of a flow chart. This flow chart can be used to identify suitable classes of respirators for adequate protection against specific environmental conditions. Refer to the corresponding narrative section for additional information pertaining to a specific part of the flow chart.

If other contaminants are present

KEY:

CC	-	Contaminant Concentration
EL	-	Exposure Limit
ESLI	-	End-of-Service Life-Indicator
FF	-	Full Facepiece
IDLH	-	Immediately Dangerous to Life or Health
PD	-	Pressure Demand
PF	-	Protection Factor
PFa	-	Assigned PF
PFmin	-	Minimum PF
PP	-	Positive Pressure
SCBA	-	Self-Contained Breathing Apparatus
SAR	-	Supplied Air Respirator

A* SCBA with FF operated in PD or PP mode.
B* Type C supplied air respirator (airline) operated in PD or PP mode with auxiliary SCBA.
C* Escape respirator or gas mask with appropriate filter/sorbent (Subparagraph 5); if O_2 deficient, then SCBA.

ATTACHMENT 3

DECISION LOGIC FOR RESPIRATORY PROTECTIVE EQUIPMENT SELECTION

Flow Chart of Respirator Decision Logic Sequence (continued)

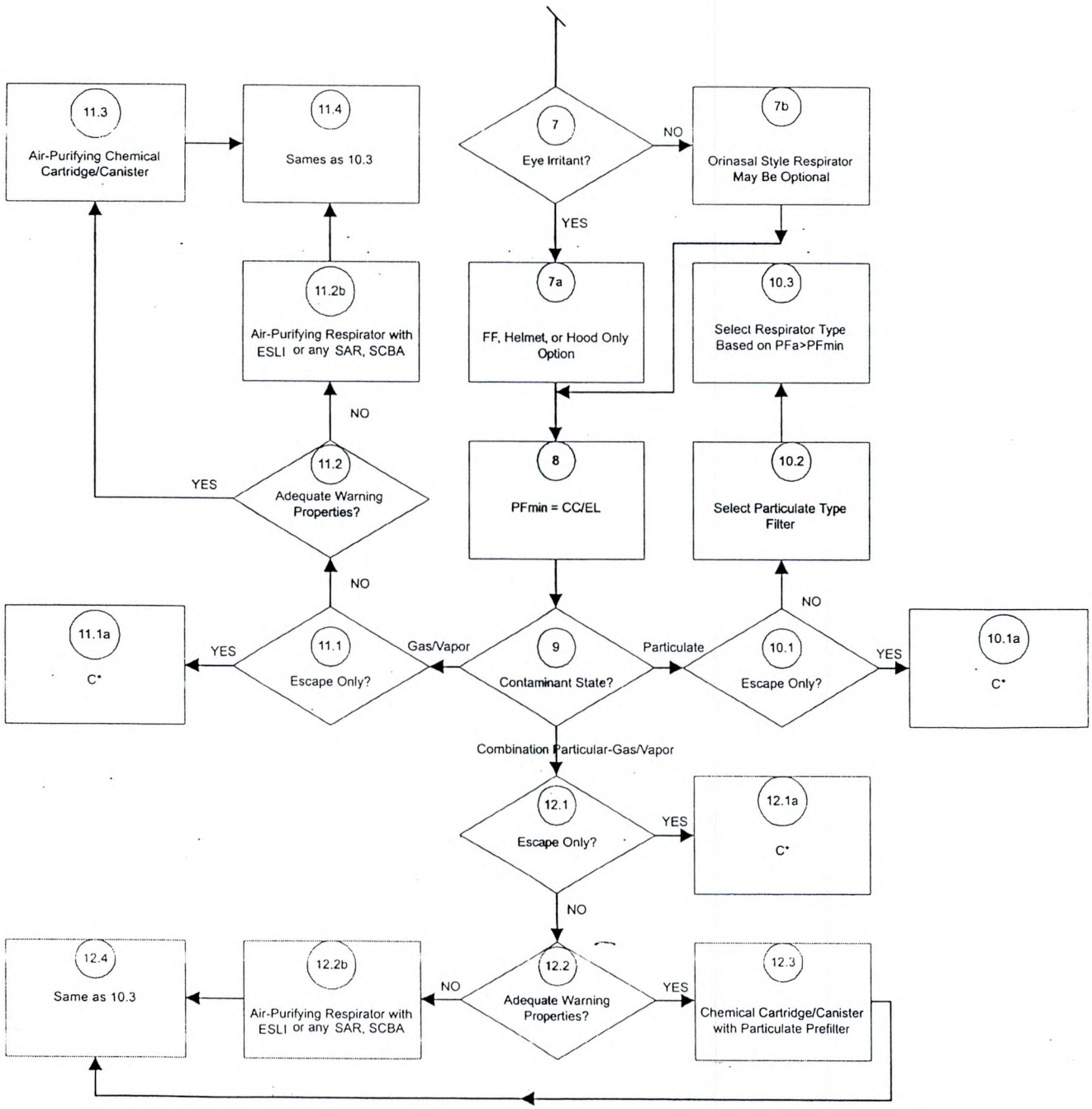

ATTACHMENT 4

MANDATORY RESPIRATOR FIT TEST PROTOCOL

OSHA-Accepted Fit Test Protocols

A. Fit Testing Procedures - General Requirements

The company shall conduct fit testing using the following procedures. The requirements in this attachment apply to all OSHA-accepted fit test methods, both QLFT and QNFT. There are several OSHA-accepted fit test protocols for QLFT. This procedure includes only the irritant smoke protocol since it requires less equipment and is more practical for field use.

1. The test subject shall be allowed to pick the most acceptable respirator from a sufficient number of respirator models and sizes so that the respirator is acceptable to, and correctly fits, the user.

2. Prior to the selection process, the test subject shall be shown how to put on a respirator, how it should be positioned on the face, how to set strap tension, and how to determine an acceptable fit. A mirror shall be available to assist the subject in evaluating the fit and positioning of the respirator. This instruction may not constitute the subject's formal training on respirator use, because it is only a review.

3. The test subject shall be informed that he/she is being asked to select the respirator that provides the most acceptable fit. Each respirator represents a different size and shape, and if fitted and used properly, will provide adequate protection.

4. The test subject shall be instructed to hold each chosen facepiece up to the face and eliminate those that obviously do not give an acceptable fit.

5. The more acceptable facepieces are noted in case the one selected proves unacceptable; the most comfortable mask is donned and worn at least five minutes to assess comfort. Assistance in assessing comfort can be given by discussing the points in the following Item A.6. If the test subject is not familiar with using a particular respirator, the test subject shall be directed to don the mask several times and to adjust the straps each time to become adept at setting proper tension on the straps.

6. Assessment of comfort shall include a review of the following points with the test subject and allowing the test subject adequate time to determine the comfort of the respirator:

   a. Position of the mask on the nose
   b. Room for eye protection
   c. Room to talk
   d. Position of mask on face and cheeks.

MANDATORY RESPIRATOR FIT TEST PROTOCOL

OSHA-Accepted Fit Test Protocols

7. The following criteria shall be used to help determine the adequacy of the respirator fit:

   a. Chin properly placed
   b. Adequate strap tension, not overly tightened
   c. Fit across nose bridge
   d. Respirator of proper size to span distance from nose to chin
   e. Tendency of respirator to slip
   f. Self-observation in mirror to evaluate fit and respirator position.

8. The test subject shall conduct a user seal check, either the negative and positive pressure seal checks. Before conducting the negative and positive pressure checks, the subject shall be told to seat the mask on the face by moving the head from side-to side and up and down slowly while taking in a few slow deep breaths. Another facepiece shall be selected and retested if the test subject fails the user seal check tests.

9. The test shall not be conducted if there is any hair growth between the skin and the facepiece sealing surface, such as stubble beard growth, beard, mustache, or sideburns which cross the respirator sealing surface. Any type of apparel which interferes with a satisfactory fit shall be altered or removed.

10. If a test subject exhibits difficulty in breathing during the tests, he/she shall be referred to a physician or other licensed health care professional, as appropriate, to determine whether the test subject can wear a respirator while performing his/her duties.

11. If the employee finds the fit of the respirator unacceptable, the test subject shall be given the opportunity to select a different respirator and to be retested.

12. Exercise Regimen: Prior to the commencement of the fit test, the test subject shall be given a description of the fit test and the test subject's responsibilities during the test procedure. The description of the process shall include a description of the test exercises that the subject will be performing. The respirator to be tested shall be worn for at least 5 minutes before the start of the fit test.

13. The fit test shall be performed while the test subject is wearing any applicable safety equipment that may be worn during actual respirator use which could interfere with respirator fit.

14. Test Exercises:

    a. The following test exercises are to be performed for all fit testing methods prescribed in this attachment, except for the controlled negative pressure (CNP)

method. A separate fit testing exercise regimen is contained in the CNP protocol. The test subject shall perform exercises, in the test environment, in the following manner:

1. Normal Breathing: In a normal standing position, without talking, the subject shall breathe normally.

2. Deep Breathing: In a normal standing position, the subject shall breathe slowly and deeply, taking caution so as not to hyperventilate.

3. Turning Head Side to Side: Standing in place, the subject shall slowly turn his/her head from side to side between the extreme positions on each side. The head shall be held at each extreme momentarily so the subject can inhale at each side.

4. Moving Head Up and Down: Standing in place, the subject shall slowly move his/her head up and down. The subject shall be instructed to inhale in the up position (i.e., when looking toward the ceiling).

5. Talking: The subject shall talk out loud slowly and loud enough so as to be heard clearly by the test conductor. The subject can read from a prepared text such as the Rainbow Passage, count backward from 100, or recite a memorized poem or song.

   Rainbow Passage:

   When the sunlight strikes raindrops in the air, they act like a prism and form a rainbow. The rainbow is a division of white light into many beautiful colors. These take the shape of a long round arch, with its path high above, and its two ends apparently beyond the horizon. There is, according to legend, a boiling pot of gold at one end. People look, but no one ever finds it. When a man looks for something beyond reach, his friends say he is looking for the pot of gold at the end of the rainbow.

6. Grimace: The test subject shall grimace by smiling or frowning. (This applies only to QNFT testing; it is not performed for QLFT.)

7. Bending Over: The test subject shall bend at the waist as if he/she were to touch his/her toes. Jogging in place shall be substituted for this exercise in those test environments such as shroud type QNFT or QLFT units that do not permit bending over at the waist.

8. Normal Breathing: Same as Item A.14.a.1.

b. Each test exercise shall be performed for one minute, except for the grimace exercise which shall be performed for 15 seconds. The test subject shall be questioned by the test conductor regarding the comfort of the respirator upon completion of the protocol. If it has become unacceptable, another model of respirator shall be tried. The respirator shall not be adjusted once the fit test exercises begin. Any adjustment voids the test, and the fit test must be repeated.

B. Qualitative Fit Test (QLFT) Protocols

1. General:

a. The employer shall ensure that persons administering QLFT are able to perform tests properly, recognize invalid tests, and ensure that test equipment is in proper working order.

b. The employer shall ensure that QLFT equipment is kept clean and well maintained so as to operate within the parameters for which it was designed.

2. Irritant Smoke (Stannic Chloride) Protocol - This qualitative fit test uses a person's response to the irritating chemicals released in the "smoke" produced by a stannic chloride ventilation smoke tube to detect leakage into the respirator.

a. General Requirements and Precautions:

1. The respirator to be tested shall be equipped with high efficiency particulate air (HEPA) or P100 series filter(s).

2. Only stannic chloride smoke tubes shall be used for this protocol.

3. No form of test enclosure or hood for the test subject shall be used.

4. The smoke can be irritating to the eyes, lungs, and nasal passages. The test conductor shall take precautions to minimize the test subject's exposure to irritant smoke. Sensitivity varies, and certain individuals may respond to a greater degree to irritant smoke. Care shall be taken when performing the sensitivity screening checks that determine whether the test subject can detect irritant smoke to use only the minimum amount of smoke necessary to elicit a response from the test subject.

5. The fit test shall be performed in an area with adequate ventilation to prevent exposure of the person conducting the fit test or the buildup of irritant smoke in the general atmosphere.

b. Sensitivity Screening Check - The person to be tested must demonstrate his/her ability to detect a weak concentration of the irritant smoke.

1. The test operator shall break both ends of a ventilation smoke tube containing stannic chloride, and attach one end of the smoke tube to a low flow air pump set to deliver 200 milliliters per minute, or an aspirator squeeze bulb. The test operator shall cover the other end of the smoke tube with a short piece of tubing to prevent potential injury from the jagged end of the smoke tube.

2. The test operator shall advise the test subject that the smoke can be irritating to the eyes, lungs, and nasal passages and instruct the subject to keep his/her eyes closed while the test is performed.

3. The test subject shall be allowed to smell a weak concentration of the irritant smoke before the respirator is donned to become familiar with its irritating properties and to determine if he/she can detect the irritating properties of the smoke. The test operator shall carefully direct a small amount of the irritant smoke in the test subject's direction to determine that he/she can detect it.

c. Irritant Smoke Fit Test Procedure:

1. The person being fit tested shall don the respirator without assistance, and perform the required user seal check(s).

2. The test subject shall be instructed to keep his/her eyes closed.

3. The test operator shall direct the stream of irritant smoke from the smoke tube toward the face seal area of the test subject, using the low flow pump or the squeeze bulb. The test operator shall begin at least 12 inches from the facepiece and move the smoke stream around the whole perimeter of the mask. The operator shall gradually make two more passes around the perimeter of the mask, moving to within 6 inches of the respirator.

4. If the person being tested has not had an involuntary response and/or detected the irritant smoke, proceed with the test exercises.

5. The exercises identified in Item A.14 of this attachment shall be performed by the test subject while the respirator seal is being continually challenged by the smoke, directed around the perimeter of the respirator at a distance of six inches.

6. If the person being fit tested reports detecting the irritant smoke at any time, the test is failed. The person being retested must repeat the entire sensitivity check and fit test procedure.

7. Each test subject passing the irritant smoke test without evidence of a response (involuntary cough, irritation) shall be given a second sensitivity screening check, with the smoke from the same smoke tube used during the fit test, once the respirator has been removed, to determine whether he/she still reacts to the smoke. Failure to evoke a response shall void the fit test.

8. If a response is produced during this second sensitivity check, then the fit test is passed.

C. Quantitative Fit Test (QNFT) Protocols

The following quantitative fit testing procedures have been demonstrated to be acceptable: quantitative fit testing using a nonhazardous test aerosol (such as corn oil, polyethylene glycol 400 [PEG 400], di-2-ethyl hexyl sebacate [DEHS], or sodium chloride) generated in a test chamber, and employing instrumentation to quantify the fit of the respirator; quantitative fit testing using ambient aerosol as the test agent and appropriate instrumentation (condensation nuclei counter) to quantify the respirator fit; quantitative fit testing using controlled negative pressure and appropriate instrumentation to measure the volumetric leak rate of a facepiece to quantify the respirator fit.

1. General:

   a. The employer shall ensure that persons administering QNFT are able to calibrate equipment and perform tests properly, recognize invalid tests, calculate fit factors properly, and ensure that test equipment is in proper working order.

   b. The employer shall ensure that QNFT equipment is kept clean, and is maintained and calibrated according to the manufacturer's instructions so as to operate at the parameters for which it was designed.

MANDATORY RESPIRATOR FIT TEST PROTOCOL

OSHA-Accepted Fit Test Protocols

2. Ambient Aerosol Condensation Nuclei Counter (CNC) Quantitative Fit Testing Protocol - The ambient aerosol CNC quantitative fit testing (Portacount™) protocol quantitatively fit tests respirators with the use of a probe. The probed respirator is only used for quantitative fit tests. A probed respirator has a special sampling device, installed on the respirator, that allows the probe to sample the air from inside the mask. A probed respirator is required for each make, style, model, and size that the employer uses and can be obtained from the respirator manufacturer or distributor. The CNC instrument manufacturer, TSI Inc., also provides probe attachments (TSI sampling adapters) that permit fit testing in an employee's own respirator. A minimum fit factor pass level of at least 100 is necessary for a half-mask respirator and a minimum fit factor pass level of at least 500 is required for a full facepiece negative pressure respirator. The entire screening and testing procedure shall be explained to the test subject prior to conducting the screening test.

   a. Portacount™ Fit Test Requirements:

      1. Check the respirator to make sure the sampling probe and line are properly attached to the facepiece and that the respirator is fitted with a particulate filter capable of preventing significant penetration by the ambient particles used for the fit test (e.g., NIOSH 42 CFR 84 Series 100, Series 99, or Series 95 particulate filter) per manufacturer's instruction.

      2. Instruct the person to be tested to don the respirator for five minutes before the fit test starts. This purges the ambient particles trapped inside the respirator and permits the wearer to make certain the respirator is comfortable. This individual shall already have been trained on how to wear the respirator properly.

      3. Check the following conditions for the adequacy of the respirator fit: chin properly placed; adequate strap tension, not overly tightened; fit across nose bridge; respirator of proper size to span distance from nose to chin; tendency of the respirator to slip; and self-observation in a mirror to evaluate fit and respirator position.

      4. Have the person wearing the respirator do a user seal check. If leakage is detected, determine the cause. If leakage is from a poorly fitting facepiece, try another size of the same model respirator, or another model of respirator.

      5. Follow the manufacturer's instructions for operating the Portacount™ and proceed with the test.

6. The test subject shall be instructed to perform the exercises in Item A.14 of this attachment.

7. After the test exercises, the test subject shall be questioned by the test conductor regarding the comfort of the respirator upon completion of the protocol. If it has become unacceptable, another model of respirator shall be tried.

b. Portacount™ Test Instrument:

1. The Portacount™ will automatically stop and calculate the overall fit factor for the entire set of exercises. The overall fit factor is what counts. The Pass or Fail message will indicate whether or not the test was successful. If the test was a Pass, the fit test is over.

2. Since the pass or fail criterion of the Portacount™ is user programmable, the test operator shall ensure that the pass or fail criterion meet the requirements for minimum respirator performance in this attachment.

3. A record of the test needs to be kept on file, assuming the fit test was successful. The record must contain the test subject's name; overall fit factor; make, model, style, and size of respirator used; and date tested.

3. Controlled Negative Pressure (CNP) Quantitative Fit Testing Protocol - The CNP protocol provides an alternative to aerosol fit test methods. The CNP fit test method technology is based on exhausting air from a temporarily sealed respirator facepiece to generate and then maintain a constant negative pressure inside the facepiece. The rate of air exhaust is controlled so that a constant negative pressure is maintained in the respirator during the fit test. The level of pressure is selected to replicate the mean inspiratory pressure that causes leakage into the respirator under normal use conditions. With pressure held constant, air flow out of the respirator is equal to air flow into the respirator. Therefore, measurement of the exhaust stream that is required to hold the pressure in the temporarily sealed respirator constant yields a direct measure of leakage air flow into the respirator. The CNP fit test method measures leak rates through the facepiece as a method for determining the facepiece fit for negative pressure respirators. The CNP instrument manufacturer, Dynatech Nevada, also provides attachments (sampling manifolds) that replace the filter cartridges to permit fit testing in an employee's own respirator. To perform the test, the test subject closes his/her mouth and holds his/her breath, after which an air pump removes air from the respirator facepiece at a pre-selected constant pressure. The facepiece fit is expressed as the leak rate through the facepiece, expressed as milliliters per minute. The quality and validity of the CNP

MANDATORY RESPIRATOR FIT TEST PROTOCOL

OSHA-Accepted Fit Test Protocols

fit tests are determined by the degree to which the in-mask pressure tracks the test pressure during the system measurement time of approximately five seconds. Instantaneous feedback in the form of a real-time pressure trace of the in-mask pressure is provided and used to determine test validity and quality. A minimum fit factor pass level of 100 is necessary for a half-mask respirator and a minimum fit factor of at least 500 is required for a full facepiece respirator. The entire screening and testing procedure shall be explained to the test subject prior to conducting the screening test.

a. CNP Fit Test Requirements:

1. The instrument shall have a non-adjustable test pressure of 15.0 mm water pressure.

2. The CNP system defaults selected for test pressure shall be set at 15 mm of water (-0.58 inches of water) and the modeled inspiratory flow rate shall be 53.8 liters per minute for performing fit tests.

   (Note: CNP systems have built-in capability to conduct fit testing that is specific to unique work rate, mask, and gender situations that might apply in a specific workplace. Use of system default values, which were selected to represent respirator wear with medium cartridge resistance at a low-moderate work rate, will allow inter-test comparison of the respirator fit.)

3. The individual who conducts the CNP fit testing shall be thoroughly trained to perform the test.

4. The respirator filter or cartridge needs to be replaced with the CNP test manifold. The inhalation valve downstream from the manifold either needs to be temporarily removed or propped open.

5. The test subject shall be trained to hold his/her breath for at least 20 seconds.

6. The test subject shall don the test respirator without any assistance from the individual who conducts the CNP fit test.

7. The QNFT protocol shall be followed according to Item C.1 of this attachment with an exception for the CNP test exercises.

b. CNP Test Exercises:

MANDATORY RESPIRATOR FIT TEST PROTOCOL

OSHA-Accepted Fit Test Protocols

1. Normal Breathing: In a normal standing position, without talking, the subject shall breathe normally for 1 minute. After the normal breathing exercise, the subject needs to hold head straight ahead and hold his/her breath for 10 seconds during the test measurement.

2. Deep Breathing: In a normal standing position, the subject shall breathe slowly and deeply for 1 minute, being careful not to hyperventilate. After the deep breathing exercise, the subject shall hold his/her head straight ahead and hold his/her breath for 10 seconds during test measurement.

3. Turning Head Side to Side: Standing in place, the subject shall slowly turn his/her head from side to side between the extreme positions on each side for 1 minute. The head shall be held at each extreme momentarily so the subject can inhale at each side. After the turning head side to side exercise, the subject needs to hold head full left and hold his/her breath for 10 seconds during test measurement. Next, the subject needs to hold head full right and hold his/her breath for 10 seconds during test measurement.

4. Moving Head Up and Down: Standing in place, the subject shall slowly move his/her head up and down for 1 minute. The subject shall be instructed to inhale in the up position (i.e., when looking toward the ceiling). After the moving head up and down exercise, the subject shall hold his/her head full up and hold his/her breath for 10 seconds during test measurement. Next, the subject shall hold his/her head full down and hold his/her breath for 10 seconds during test measurement.

5. Talking: The subject shall talk out loud slowly and loud enough so as to be heard clearly by the test conductor. The subject can read from a prepared text such as the Rainbow Passage, count backward from 100, or recite a memorized poem or song for 1 minute. After the talking exercise, the subject shall hold his/her head straight ahead and hold his/her breath for 10 seconds during the test measurement.

6. Grimace: The test subject shall grimace by smiling or frowning for 15 seconds.

7. Bending Over: The test subject shall bend at the waist as if he/she were to touch his/her toes for 1 minute. Jogging in place shall be substituted for this exercise in those test environments such as shroud-type QNFT units that prohibit bending at the waist. After the bending over exercise,

the subject shall hold his/her head straight ahead and hold his/her breath for 10 seconds during the test measurement.

8. Normal Breathing: The test subject shall remove and re-don the respirator within a one-minute period. Then, in a normal standing position, without talking, the subject shall breathe normally for 1 minute. After the normal breathing exercise, the subject shall hold his/her head straight ahead and hold his/her breath for 10 seconds during the test measurement. After the test exercises, the test subject shall be questioned by the test conductor regarding the comfort of the respirator upon completion of the protocol. If it has become unacceptable, another model of a respirator shall be tried.

c. CNP Test Instrument:

1. The test instrument shall have an effective audio warning device when the test subject fails to hold his/her breath during the test. The test shall be terminated whenever the test subject failed to hold his/her breath. The test subject may be refitted and retested.

2. A record of the test shall be kept on file, assuming the fit test was successful. The record must contain the test subject's name; overall fit factor; make, model, style, and size of respirator used; and date tested.

ATTACHMENT 5

RESPIRATOR FIT TEST FORM

NAME: _____ CONDUCTED BY: _____

PLEASE PRINT

SIGNATURE: _____ LOCATION: _____

SSN: _____-_____-_____ HOME DEPT.: _____ DATE: _____

FIT TEST PROTOCOL

QUANTITATIVE:

Fit Factor _____

QUALITATIVE:

Irritant Smoke _____

Other _____

Specify: _____

TYPE OF RESPIRATOR
(Circle Appropriate One)

APR/HF APR/FF SCBA

ASR/EGS PAPR OTHER

Respirator Manufacturer: _____
Model: _____
Size: _____

	INITIAL
1. I understand why respiratory protection is needed and where and when it should be used.	
2. I know how to use this respirator properly.	
3. I know how to clean and inspect this respirator.	
4. I understand the limitations and restrictions of the respirator I will be using.	
5. I wore this respirator in normal air and performed the user seal checks.	
6. I wore this respirator equipment in a test atmosphere.	
7. I understand that a good gas-tight face seal cannot be achieved with obstructions such as facial hair or glasses.	
8. I understand that corrective lens compatible with the full facepiece are available by my manager.	

ATTACHMENT 6

EMERGENCY RESPIRATORY PROTECTIVE EQUIPMENT MONTHLY INSPECTION CHECKLIST

INSPECTED BY: _____ Date: _____
(Print)

BACKPACK # _____ AIR CYLINDER # _____

		PASS	FAIL
A. Backpack and Harness Assembly	1. Straps	☐ Inspect for complete set	☐
		☐ Inspect for damaged straps	☐
	2. Buckles	☐ Inspect for mating ends	☐
		☐ Check locking function	☐
	3. Backplate and Cylinder Lock	☐ Inspect backplate for cracks, missing screws/rivets	☐
		☐ Inspect cylinder hold down strap	☐
		☐ Inspect strap tightener	☐
B. Cylinder and Cylinder Valve Assembly	1. Cylinder	☐ Cylinder tight to backplate	☐
		☐ Current Hydrostatic Test	☐
		☐ Inspect cylinder for dents, gouges	☐
		☐ Is cylinder at least 90% filled?	☐
	2. Head and Valve Assembly	☐ Inspect cylinder valve lock for presence	☐
		☐ Inspect cylinder gauge for condition	☐
		☐ Proper function of cylinder valve lock	☐
		☐ Test for cylinder valve leakage	☐
C. Regulator and High Pressure Hose	1. High Pressure Hose and Connector	☐ Leakage in hose	☐
		☐ Leakage in hose to cylinder connector	☐
	2. Regulator and Low Pressure Alarm	☐ Read regulator gauge (at least 1,000 psi)	☐
		☐ Low pressure alarm sounds at 500 psi	☐
		☐ Test integrity of diaphragm	☐
		☐ Test for positive pressure	☐
		☐ Test bypass system	☐
D. Facepiece and Corrugated Breathing Tube	1. Facepiece	☐ Inspect harness for deterioration	☐
		☐ Inspect facepiece body for deterioration	☐
		☐ Inspect lens	☐
		☐ Inspect exhalation valve	☐
	2. Breathing Tube and Connector	☐ Inspect breathing tube for deterioration	☐
		☐ Inspect connector threads and gasket	☐
	3. Leak Test and Cleaning	☐ Perform negative pressure test on facepiece/breathing tube	☐
		☐ Clean and sanitize facepiece	☐

NOTE: Any item marked "Fail" will place the equipment out of service until repaired/replaced.

ATTACHMENT 7

GUIDE TO RESPIRATORY PROTECTIVE EQUIPMENT CLEANING, INSPECTION, MAINTENANCE, AND STORAGE

A program for the maintenance of respirators shall include the following:

- Cleaning and sanitizing
- Inspection for defects
- Maintenance and repair
- Storage
- Assurance of breathing air quality.

The following maintenance, inspection, and storage program is recommended.

1. Cleaning and Sanitizing

Respirators issued to an individual shall be cleaned and sanitized regularly. Each respirator shall be cleaned and sanitized before being worn by different individuals. Respirators intended for emergency use shall be cleaned and sanitized after being used. The following shall be completed in addition to the manufacturer's instruction for cleaning:

a. Remove, when necessary, the following components of respiratory inlet covering assemblies before cleaning and sanitizing:

   1) Filters, cartridges, canisters
   2) Speaking diaphragms
   3) Valve assemblies
   4) Any components recommended by the respirator manufacturer.

b. Wash respiratory inlet covering assemblies in warm (43°C or 110°F maximum temperature) cleaner sanitizer solution. A stiff bristle (not wire) brush may be used to facilitate removal of dirt or other foreign material.

c. Rinse the respirator inlet covering assemblies in clean, warm (43°C or 110°F maximum temperature) water.

d. Drain all water, and air dry the respiratory inlet covering assemblies.

e. Clean and sanitize all parts removed from the respiratory inlet covering assemblies as recommended by the manufacturers

f. If necessary to remove foreign material, hand wipe respiratory inlet covering assemblies, all parts, and all gasket- and valve-sealing surfaces with damp, lint-free cloth.

g. Inspect parts and replace any that are defective.

h. Reassemble parts on respirator inlet covering assemblies.

i. Visually inspect and, where possible, test parts and respirator assemblies for proper function.

j. Place assembled respirators in appropriate containers for storage.

Machines may be used to expedite the cleaning, sanitizing, rinsing, and drying of large numbers of respirators. Extreme care shall be taken to ensure against tumbling, agitation, or exposure to temperatures above those recommended by the manufacturer (normally 43°C or 100°F maximum), as these conditions are likely to result in damage to the respirators.

Ultrasonic cleaners, clothes washing machines, dishwashers, and clothes dryers have been specially adapted and successfully used for cleaning and drying respirators.

Cleaner sanitizers that effectively clean the respirator and contain a bactericidal agent are commercially available. The bactericidal agent frequently used is a quaternary ammonium compound. Strong cleaning and sanitizing agents and many solvents can damage rubber or elastomeric respirator parts. These materials must be used with caution.

Alternatively, respirators may be washed in a detergent solution and then sanitized by immersion in a sanitizing solution. Some sanitizing solutions that have proven effective are: (a) a hypochlorite (bleach) solution (50 parts per million chlorine), 2-minute immersion; (b) an aqueous iodine solution (50 parts per million of iodine), 2-minute immersion; or (c) a quaternary ammonium solution (200 parts per million of quaternary ammonium compounds in water with less than 500 parts per million total hardness), 2-minute immersion.

Inflammation of the skin of the respirator user (dermatitis) may occur if the quaternary ammonium compounds are not completely rinsed from the respirator. The hypochlorite and iodine solutions are unstable and break down with time; they may cause deterioration of rubber or other elastomeric parts and may be corrosive to metallic parts. Immersion times should not be extended beyond the mentioned time periods, and the sanitizers shall be thoroughly rinsed from the respirator parts.

Respirators may become contaminated with toxic materials. If the contamination is light, normal cleaning procedures should provide satisfactory decontamination; otherwise, separate decontamination steps may be required before cleaning.

2. Inspection

The user shall inspect the respirator immediately prior to each use to ensure that it is in proper working condition. After cleaning and sanitizing, each respirator shall be inspected to determine if it is in proper working condition, if it needs replacement parts or repairs, or if it should be

discarded. Each respirator stored for emergency or rescue use shall be inspected at least monthly.

Respirator inspection shall include a check for tightness of connections; for the condition of the respiratory inlet covering, head harness, valves, connecting tubes, harness assemblies, hoses, filters, cartridges, canisters, end-of-service indicators, electrical components, and shelf-life date(s); and for the proper function of regulators, alarms, and other warning systems. Each rubber or other elastomeric part shall be inspected for pliability and signs of deterioration. Each air and oxygen cylinder shall be inspected to ensure that it is fully charged according to the manufacturer's instructions.

A record of inspection dates shall be kept for each respirator maintained for emergency or rescue use. Respirators that do not meet applicable inspection criteria shall be immediately removed from service (a temporary replacement assigned) and repaired or permanently replaced.

Inspection of hoop-wrapped air cylinders will follow the recommendations set forth in the Compressed Gas Association, Inc. publication CGA C-6.2-1988, "Guidelines for Visual Inspection & Requalification of Fiber Reinforced High Pressure Cylinders," and will be examined for the following five types of damage:

- Abrasion is damage caused by wearing, grinding, or rubbing away by friction. Abrasions less than 0.005 inch (0.127 mm) deep are acceptable and should have no adverse effects on the safety of the cylinder. Abrasions with isolated groups of fibers exposed or flat spots with a depth greater than 0.005 inch (0.127 mm) but less than 0.0075 inch (0.191 mm) are acceptable if the damage is repaired. Cylinders abraded in excess of 0.0075 inch (0.191 mm) should be taken out of service until professionally inspected.

- Cuts are damage inflicted by a sharp object. Cuts or scratches less than 0.005 inch (0.127 mm) deep are acceptable regardless of length, number, or direction. For cuts greater than 0.005 inch (0.127 mm) deep and up to a depth of 0.015 inch (0.038 mm) with a maximum 1- or 2-inch (25.4 mm or 50.8 mm) length transverse to the fiber direction, the cylinder should be removed from service until repaired. Cylinders with cuts greater than 0.015 inch (0.038 mm) with a maximum greater than 2 inches (50.8 mm) length transverse to the fiber direction or with bare metal showing through must be condemned.

- Impact damage is caused by a cylinder striking or being struck by another object. Impact damage is considered slight if a frosted area is noted in the impact area. These cylinders may be returned to service. Impact damage is severe if evidence of fiber cutting, delamination, and possible structural damage is apparent. Cylinders sustaining severe impact damage should be evaluated using the guidelines for cuts and structural damage.

- Structural damage is damage which causes a visual change in original cylinder configuration. This change can include any evidence of bulges, a cocked end fitting, concave areas on the domes or on the cylinder section, or, if by visual inspection of the cylinder interior, there is evidence of damage involving deformation of the liner. Structurally damaged cylinders must be immediately removed from service and condemned.

- Heat or fire damage to a cylinder is evident by discoloration, charring, or burning of the composite, labels, paint, or plastic components of the valve. Such damage would cause a cylinder to be removed from service and condemned. Note: If the cylinder is only soiled from smoke or other debris and is found to be intact underneath, it may be returned to service.

3. Maintenance and Repair

Replacement of parts or repairs shall be done only be persons trained in proper respirator maintenance and assembly. Replacement parts shall be only those designated for the specific respirator repaired. Reducing or admission valves, regulators, and alarms shall be adjusted or repaired by the respirator manufacturer or a technician trained by the manufacturer. Instrumentation for valve, regulator, and alarm adjustments and tests should be calibrated to a standard traceable to the National Institute of Standards and Technology (NIST), at a minimum of every 3 years.

4. Storage

Respirators shall be stored in a manner that will protect them against physical and chemical agents such as vibration, shocks, sunlight, heat, extreme cold, excessive moisture, or damaging chemicals. Respirators shall be stored to prevent distortion of rubber or other elastomeric parts. Respirators shall not be stored in such places as lockers and tool boxes, unless they are protected from contamination, distortion, and damage. Emergency and rescue respirators that are placed in the work areas shall be quickly accessible at all times, and the storage cabinet or container in which they are stored shall be clearly marked.

5. Assurance of Breathing Air Quality

Compressed gaseous air, compressed gaseous oxygen, liquid air, and liquid oxygen used for respiration shall be of high purity. Compressed gaseous air shall meet at least the requirements of the specification for Type I-Grade D breathing air, and liquid air shall meet at least the requirements for Type II-Grade B breathing air as described in ANSI/CGA G-7.1-1989.

The CGA designation for Grade D and Grade E breathing air is as follows:

- Grade D breathing air, as per ANSI/CGA G-7.1-1989, shall contain between 19.5 and 23.5 percent oxygen with the balance predominantly nitrogen, a maximum of 5 mg/m^3

oil (condensed), a maximum of 10 ppm carbon monoxide, no pronounced odor, and a maximum of 1,000 ppm carbon dioxide.

- Grade E breathing air, as per ANSI/CGA G-7.1-1989, shall contain between 20 and 22 percent oxygen with the balance predominantly nitrogen, a maximum of 5 mg/m^3 oil (condensed), a maximum of 10 ppm carbon monoxide, no pronounced odor, a maximum of 500 ppm carbon dioxide, and 25 ppm total hydrocarbon content (as methane).

- Note: The quality verification for oil is not required for synthesized air whose oxygen and nitrogen components are produced by air liquefaction. Carbon monoxide quality verification is not required for Grade D breathing air if synthesized air when nitrogen component was previously analyzed and meets National Foundry (NF) specification and when the oxygen component was produced by air liquefaction and meets United States Pharmacopeia (USP) specification.

Compressed gaseous air may contain low concentrations of oil introduced from equipment during processing or normal operation. If high-pressure oxygen passes through an oil- or grease-coated orifice, an explosion or fire may occur. Therefore, compressed gaseous oxygen shall not be used in supplied air respirators or in open-circuit type self-contained breathing apparatus that have previously used compressed air. Oxygen concentrations greater than 23.5 percent shall be used only in equipment designed for oxygen service or distribution.

The dew point of air used to recharge self-contained breathing apparatus shall be -65°F or lower (less than 25 ppm water vapor). The driest air obtainable (dew point of -100°F or lower) should be used for recharging SCBA cylinders to be used in environments with ambient temperatures below -25°F. The dew point of breathing air used with supplied air respirators should be lower than the lowest ambient temperature to which any regulator or control valve on the respirator or air-supplied system will be exposed.

Breathing air couplings shall be incompatible with outlets for nonrespirable plant air or other gas systems to prevent inadvertent servicing of supplied air respirators with nonrespirable gases. **IT IS RECOMMENDED THAT FOSTER OR HANSEN FITTINGS BE RESERVED FOR BREATHING AIR SYSTEMS.** Breathing air outlets shall be labeled.

Breathing air may be supplied to supplied air respirators from cylinders or air compressors. Cylinders shall be tested and maintained in accordance with applicable DOT specifications for shipping containers (49 CFR 173 and 178). Breathing gas containers shall be marked in accordance with ANSI/CGA C-4-1990. Specific test recommendations for purchased breathing air are given in the following table.

GUIDE TO RESPIRATORY PROTECTIVE EQUIPMENT CLEANING, INSPECTION, MAINTENANCE, AND STORAGE

NOTES:

1. When using air compressors, intake location shall be carefully selected and monitored closely to ensure air supplied to the compressor is of adequate quality.
2. No frequency for periodic checks of air quality is specified, due to wide variation in equipment types, use and working environments, and operating experience.
3. Continuous monitoring of temperature and carbon monoxide are not required.
4. For non-oil lubricated compressors that operate at less than 35 psi, no sampling for water is required.
5. These requirements apply to systems designed for breathing air, other air-supply systems need to be evaluated on a case-by-case basis for the type and frequency of testing.

Further details on sources of compressed air and its safe use can be found in CGA G-7-1988.

APPENDIX F
APPROVED MODIFICATIONS TO THE QAPP AND HASP

GE Corporate
Environmental Program

October 22, 1991

Chief, New York/Caribbean Compliance Branch
U.S. Environmental Protection Agency
26 Federal Plaza - Room 737
New York, New York 10278
Attn: Alison Hess, Project Manager
Malta Rocket Fuel Area Site, Malta, NY
(3 copies)

Chief, New York/Caribbean Superfund Branch
U.S. Environmental Protection Agency
26 Federal Plaza - Room 437
New York, New York 10278
Attn: Malta Rocket Fuel Area Attorney - Virginia Capon
(1 copy)

Bureau of Eastern Remedial Action
Division of Hazardous Waste Remediation
NYS Department of Environmental Conservation
50 Wolf Road - Room 222
Attn: Jon Greco, Project Manager
Malta Rocket Fuel Area Site, Malta, NY
(3 copies)

Re: Malta Rocket Fuel Area Site - Modifications to Health and Safety Plan

Dear Ms. Hess et al.:

In planning for the beginning of the RI field investigation, ERM reviewed the project Health and Safety Plan (HASP) for the Malta Rocket Fuel Area Site. ERM has recommended a few minor modifications to improve the efficiency of the field activities and provide flexibility in making field decisions regarding health and safety precautions, while ensuring that safe working conditions are maintained throughout the field investigation. This letter requests EPA review and approval of the recommended modifications, which are described below.

HASP Breathing Zone VOC Monitoring

As currently required in the HASP, the breathing zone of workers is to be monitored for airborne volatile organic compounds (VOCs) with a PID instrument during all site activities. An action limit of 2 ppm sustained needle deflection for a duration of five minutes is identified in the HASP. If VOC concentrations exceed this action level, drager tubes are to be drawn for carbon tetrachloride and chloroform to confirm their presence. These two compounds are qualitatively investigated because they have the most stringent OSHA standards (2 ppm eight hour time weighted threshold limit value) of the site-specific VOCs. According to the HASP, if the drager tube analysis confirms the presence of either of these compounds at or above 2 ppm, workers will be moved to a safe area upwind, and a decision will be made to either wait to allow the vapors to vent and fall below the action level or to upgrade the protection level. ERM has recommended minor modifications (described below) with regard to PID monitoring during non-intrusive and intrusive field investigations.

The HASP also requires that drager tubes for carbon tetrachloride be drawn at a minimum of at the beginning of each task and every two hours following this. We believe this requirement is excessive given the requirement to draw drager tubes for carbon tetrachloride and chloroform when PID readings reach or exceed 2 ppm. We recommend that this requirement be deleted.

Screening for Non-Intrusive Field Investigations

As currently required in the HASP, the worker's breathing zone will be monitored for airborne VOCs with a real time PID during all tasks performed at the site. ERM believes that during non-intrusive field tasks, this is unnecessary for protection of worker health and safety.

ERM recommends performing an initial survey of the areas to be investigated with a PID to identify any area that, while undisturbed, exhibits potentially hazardous (i.e., above OSHA PEL) concentrations of VOCs in the breathing zone. This initial survey will serve to identify those areas that can be investigated by non-intrusive methods (i.e., surveying, geophysics, and surface water and surface soil sampling) without the necessity for real time VOC monitoring. Flammable/explosive gas surveying of the site will also be performed during this initial site survey to identify any explosion hazards to the non-intrusive site activities field teams.

ERM recommends that non-intrusive work in areas identified as non-hazardous (based on the initial site survey) be conducted without real time PID monitoring. Any areas identified as potentially hazardous will be monitored during the non-intrusive phase of work following the plan described below.

VOC Screening During Intrusive Field Investigations

Both VOC and explosive gas monitoring will be performed at all times during intrusive phases of the investigation (i.e., soil gas survey, drilling, monitoring well installation, trenching, well development, and subsurface soil/sludge and water sampling).

ERM recommends that the 2 ppm/five minute action limit be employed as suggested by the HASP. If the action level is reached, drager tubes will be drawn to determine if the PID response is due to the presence of chloroform and/or carbon tetrachloride, as currently provided in the HASP. If one or both of these compounds is present at or above 2 ppm, the field team will be moved to a safe upwind location and a decision will be made to either allow the vapors to vent and fall below the action limit or to upgrade the personal protection level. If personal protection is upgraded, ERM recommends that the upgraded protection level be left in place until the PID readings fall below the 2 ppm action limit for a period of five minutes or until drager tube results indicate that chloroform and carbon tetrachloride levels have fallen below 2 ppm.

When personal protection has been upgraded, and full face respirators are in use, ERM recommends continual monitoring of workers' breathing zones for VOCs with the PID. There is no need to employ the drager tubes on a rigid two hour schedule as currently required by the HASP. ERM recommends that drager tubes be drawn at the discretion of the on-site health and safely officer, rather than on a regular two hour schedule.

If the PID response (above 2 ppm) is not due to the presence of chloroform and/or carbon tetrachloride (as indicted by drager tube testing), work will continue as before without interruption. As long as PID readings remain above 2 ppm, drager tubes will be drawn every two hours to ensure that proper respiratory protection is being employed. In the event that drager tube results remain below 2 ppm, no respiratory protection will be required until PID readings climb above 50 ppm. Above this secondary action level, the OSHA threshold limit value for trichlorethene (TCE) will be exceeded, and the field team will be moved to a safe upwind location and a decision will be made to wait until the vapors vent to below 50 ppm or to upgrade the level of personal protection.

Since no OSHA ceiling limits for exposure have been set in the HASP for carbon tetrachloride or chloroform, ERM recommends establishing a third action level of 200 ppm (100 times the 2 ppm OSHA 8 hour PEL). At this concentration (as indicated by PID readings), the workers will be moved to a safe area upwind until the vapors have vented, regardless of the level of personal protection currently in use.

This plan provides action levels not only for those compounds with low threshold limits and for those with higher values (trichlorethene). Therefore, it allows for more flexibility in making field decisions regarding health and safety precautions. This flexibility will enable field teams to safely continue work in conditions where work would be interrupted under the current HASP.

Please call if you have questions or require additional information to clarify this request.

Very truly yours,

Barbara C. Hotchkin

Barbara C. Hotchkin
Facility Coordinator

cc: Hal Brodie, Esq., NYS Energy Research and Development Authority
Dennis Colton/Laine Vignona, Geraghty & Miller
Don Hooker, US Army Corps of Engineers
Jane Gardner, Esq., GE
Phil Gitlen, Esq., Whiteman, Osterman & Hanna
Angus Macbeth, Esq./Peggy O'Brien, Esq., Sidley & Austin
William Miller, ERM - Northeast
August Spallo, Esq., US Army Corps of Engineers

UNITED STATES ENVIRONMENTAL PROTECTION AGENCY
REGION II
JACOB K. JAVITS FEDERAL BUILDING
NEW YORK, NEW YORK 10278

OCT 23 1991

Barbara Hotchkin
Facility Coordinator
General Electric Company
1 Computer Drive South
Albany, NY 12205

Dear Ms. Hotchkin:

This is to confirm the results of your October 18, 1991 telephone conversation with Alison Hess of my staff and an October 10, 1991 teleconference with you, Doug Wolf of ERM-Northeast, Ms. Hess, and Laura Scalese of the U.S. Environmental Protection Agency's (EPA's) Edison Laboratory. During these conversations, EPA discussed modifications to the Project Operations Plan (POP) proposed in your October 1, 1991 letter to me.

The changes with regard to prescreening, field blanks, gas standards for instrument calibration, instrument calibration, and compound identification and quantification are acceptable to EPA as proposed in your October 1 letter.

However, with regard to the blanks/quality control section of your letter, EPA has the following clarifications and changes. Duplicate samples are taken to demonstrate the reproducibility of the sampling technique. These samples consist of two aliquots of sample placed in the field into identical sample containers. Duplicate samples shall be collected at a frequency of one per day or one per twenty (20) samples, whichever is more frequent.

Replicate samples will be analyzed to determine the variability of the analysis. For soil-gas sampling, replicate samples will be prepared by analyzing two injections from a single soil gas sample. Replicate samples shall be analyzed at a frequency of one per day or one per twenty (20) samples, whichever is more frequent.

Lastly, EPA discussed the definition of the "analyte-free" water that is to be used for blank samples and for the final decontamination rinse. In accordance with the Region II Quality Assurance Manual (pp. 38 and 59, enclosed), sampling equipment and blank samples require the use of deionized water that has been demonstrated analyte-free for all contaminants of concern at each Superfund site at the level of interest.

For the Malta Rocket Fuel Area Site, these include the Contract Required Detection Limits (for inorganics) and the Contract Required Quantification Limits (for semi-volatile organics, pesticides, and PCBs). The definition of analyte-free for purgable organics is less than 2 ppb, the quantitation limit for Method 524.2. For boron and any other analytes added to the Target Analyte List, analyte-free shall mean less than the laboratory's quantitation limit for the analytical method approved by EPA. For the common laboratory contaminants methylene chloride, acetone, toluene, 2-butanone, and phthalates, the limits are three times their respective quantitation limits.

If you have any questions regarding this matter, please call Alison Hess, Project Manager, at (212) 264-6040.

Sincerely yours,

Carole Petersen, Chief
New York/Caribbean Superfund Branch II

Enclosures

cc: J. Greco, NYSDEC

X. FIELD QUALITY CONTROL SAMPLES

A. All Analyses Except Dioxin

1. Duplicates

Environmental duplicate samples are collected to demonstrate the reproducibility of sampling technique. Environmental duplicate samples must be taken at a frequency of at least 5% (1 in 20). This is a separate duplicate from the duplicates a laboratory must run, and cannot be replaced by a laboratory generated duplicate. This applies to every matrix sampled. Environmental duplicates are representative of field sampling precision, whereas laboratory duplicates are a measure of analytical precision. Both pieces of information are essential to determining the quality of data generated for a project.

2. Blanks

Blank water generated for use in the Region II CERCLA program must be "demonstrated analyte-free". By this term we mean water of a known quality which is defined by the Quality Assurance office.

The criteria for analyte-free water is as follows. The assigned values for the Contract Required Detection Limits (CRDLs) and Contract Required Quantitation Limits (CRQLs) can be found in the most recent CLP SOWs or in Appendix III enclosed. These criteria apply to <u>all</u> blank water used for fund-lead as well as PRP projects whether or not EPA CLP analytical methods are employed. If the levels of detection needed on a specific site are lower than the CLP CRDLs/CRQLs, then those levels are used to define the criteria for analyte free water.

purgeable organics	<10 ppb
semi-volatile organics	<CRQL
pesticides	<CRQL
PCBs	<CRQL
inorganics	<CRDL

However, specifically for the common laboratory contaminants listed below, the allowable limits are three times the respective CRQLs.

methylene chloride
acetone
toluene
2-butanone
phthalates

The analytical testing required for the water to be demonstrated as analyte free must be performed <u>prior</u> to the start of sample collection. The results must either be sent to the Region II QAO assigned to the specific project or be kept on-site

V. FIELD/LABORATORY DECONTAMINATION OF SAMPLING APPARATUS

A. General Considerations

All sampling apparatus must be properly decontaminated prior to its use in the field to prevent cross-contamination. The equipment should be pre- cleaned in a laboratory situation, or if the duration of the sampling event prohibits pre-cleaning in a lab, then equipment should be decontaminated once a day in an area outside of the contaminated zone. Enough equipment must be available to be dedicated to sampling points each day.

Also to avoid cross-contamination, disposable gloves must be worn by the sampling team and changed between sampling points. While performing the decontamination procedure, phthalate-free gloves must be used in order to prevent phthalate contamination of the sampling equipment by interaction between the gloves and the organic solvent(s).

B. Decontamination Procedures

The required decontamination procedure for all sampling equipment is:

a. wash and scrub with low phosphate detergent
b. tap water rinse
c. rinse with 10% HNO_3, ultrapure
d. tap water rinse
e. an acetone only rinse or a methanol followed by hexane rinse (solvents must be pesticide grade or better)
f. thorough rinse with deionized demonstrated analyte free water*+
g. air dry, and
h. wrap in aluminum foil for transport

*See page 59 for water criteria.
+The volume of water used during this rinse must be at least five times the volume of solvent used in Step e.

Tap water may be used from any municipal water treatment system. The use of an untreated potable water supply is not an acceptable substitute. If metals samples are not being collected, the 10% nitric acid (HNO_3) rinse may be omitted, and, conversely, if organics samples are not being taken, the solvent rinse may be omitted.

When it is necessary to use split spoon sampling devices which are composed of carbon steel instead of stainless steel, the nitric acid rinse may be lowered to a concentration of 1% instead of 10% so as to reduce the possibility of leaching metals from the spoon itself.

GE Corporate
Environmental Progra

Northeast/Midwest Regions
General Electric Company
1 Computer Drive South, Albany, NY 12205
518 458-3108

November 4, 1991

Chief, New York/Caribbean Compliance Branch
U.S. Environmental Protection Agency
26 Federal Plaza - Room 737
New York, New York 10278
Attn: Alison Hess, Project Manager
Malta Rocket Fuel Area Site, Malta, NY

Chief, New York/Caribbean Superfund Branch
U.S. Environmental Protection Agency
26 Federal Plaza - Room 437
New York, New York 10278
Attn: Malta Rocket Fuel Area Attorney - Virginia Capon

Bureau of Eastern Remedial Action
Division of Hazardous Waste Remediation
NYS Department of Environmental Conservation
50 Wolf Road - Room 222
Attn: Jon Greco, Project Manager
Malta Rocket Fuel Area Site, Malta, NY

Re: Malta Rocket Fuel Area Site - Confirmation of Phone Conversations Regarding-Analyte Free Water

Dear Ms. Hess et al.:

This letter confirms our recent phone conversations regarding use of analyte-free water during equipment decontamination. Based on these conversations, we understand that deionized water (demonstrated to be analyte-free) need only be used in the final rinse. This is a modification of the approved Project Operations Plan (POP), which currently indicates that distilled water (demonstrated analyte-free) will be used in two rinses.

You further indicated that the deionized water, which will be obtained from our analytical laboratory for this project, may be shipped and stored in 5-gallon high density polyethylene carboys. The holding time (from receipt from the laboratory) is seven days. However, because of the limited quantity of such water that we can obtain from the laboratory, you indicated we can use water remaining from a previous week, with the stipulation that this water be used for the final decontamination rinse only, and not for rinse blanks.

Your letter of October 23, 1991 presents EPA's definition of analyte-free water, and refers to the Region II Quality Assurance (QA) Manual. We agreed that the detection level for purgable organics identified in the letter (2 ppb, the quantitation limit for Method 524.2) should be 10 ppb (as indicated in the QA Manual) in the first round of sampling, since Method 524.2 will not be used for that round. However, it may be necessary to use the 2 ppb detection level for the second round of sampling if Method 524.2 is used.

Please call if you have questions. If I do not hear from you to the contrary within two weeks, I will assume that these modifications and clarifications are acceptable to EPA.

Very truly yours,

Barbara C. Hotchkin

Barbara C. Hotchkin
Facility Coordinator

cc: Hal Brodie, Esq., NYS Energy Research and Development Authority
Dennis Colton/Laine Vignona, Geraghty & Miller
Don Hooker, US Army Corps of Engineers
Jane Gardner, Esq., GE
Phil Gitlen, Esq., Whiteman, Osterman & Hanna
Angus Macbeth, Esq./Peggy O'Brien, Esq., Sidley & Austin
William Miller, ERM - Northeast
August Spallo, Esq., US Army Corps of Engineers

UNITED STATES ENVIRONMENTAL PROTECTION AGENCY
REGION II
JACOB K. JAVITS FEDERAL BUILDING
NEW YORK, NEW YORK 10278

NOV 5 1991

BY FACSIMILE and
CERTIFIED MAIL--
RETURN RECEIPT REQUESTED

Barbara Hotchkin
Facility Coordinator
General Electric Company
1 Computer Drive South
Albany, NY 12205

Re: Draft Literature Search Report for the Malta Rocket Fuel Area Superfund Site, Towns of Malta and Stillwater, Saratoga County, New York, October 1991

Dear Ms. Hotchkin:

The U.S. Environmental Protection Agency (EPA) and New York State have completed a preliminary review of portions of the above-referenced document. As requested in your October 14, 1991 cover letter to the document, EPA and New York State reviewed those portions of the document related to the geophysical and soil-gas programs, because these tasks are scheduled to begin shortly. Specifically, the comments contained herein are limited to the following portions of the draft Literature Search Report: Recommendation 2.A: Soil-gas Surveys (p. 11-1 and 11-2); Recommendation 2.D: Test Pits and Geophysical Surveys (p. 11-3); Table 11: Inventory of Septic Systems; and Appendix D: Additional Soil-gas and Geophysical Survey Grids. EPA and New York State may provide additional comments on these sections as we complete our full reviews.

This letter also transmits EPA's comments on the certificates of insurance submitted with your monthly progress report dated October 9, 1991, and on your request for a minor modification to the Remedial Investigation (RI) Work Plan regarding submittal of a final Literature Search Report, presented in your October 14, 1991 cover letter to the draft Literature Search Report. Lastly, EPA is also addressing the changes to Health and Safety Plan, contained within the Project Operations Plan (POP), which are outlined in your October 22, 1991 letter.

General Comments on Geophysical and Soil-gas Programs

1) As stated in EPA's February 11, 1991 letter, maps depicting geophysical and soil-gas grids are schematic only; in the field

sampling may be necessary beyond the estimated boundaries of each area of concern and/or between grid points to more accurately determine the extent of contamination.

Geophysical Survey:

2) In accordance with the EPA-approved POP (p. 5-16 and 17), geophysical readings shall be taken every 5 feet along lines spaced 10 feet apart (note that the figures presented in the Literature Search and POP do not show the grids at that scale). In addition, as stated above, the figures generally do not show additional data points expected between and beyond the grid points, which may be necessary to determine the extent of contamination.

3) The POP states (p. 5-15) that the magnetic method or ground penetrating radar (GPR) may be used in areas where the electromagnetic data are inconclusive. Within two (2) weeks of completion of the electromagnetic survey, Respondents shall analyze the results and provide EPA with a recommendation (and a technical rationale for same) regarding the need for additional geophysical work. In particular, Respondents shall address the use of GPR to determine the extent of filled material in the filled-in ponds.

Soil-Gas Survey:

4) The draft Literature Search Report proposes no change to calibration of the gas chromatograph (GC) with the four analytes indicated in the POP, although other volatile organic compounds have been detected at the Site (p. 7-4 of Literature Search Report). The soil-gas survey is a screening method to determine the most appropriate locations for collecting soil samples. While the GC will be able to positively identify only the four calibrated compounds, Respondents shall ensure that soil samples collected for laboratory analysis for each area of concern are representative of the unknown compounds encountered during the soil-gas survey of that area. Depending on the results of soil-gas surveys, this may require the collection and analysis of soil samples in addition to those specified in the RI Work Plan.

5) As stated above, soil-gas readings must be taken to the limits of the estimated area of concern or until background conditions are achieved, whichever is greater. Soil-gas readings shall be taken between grid points if there is more than a factor of 10 difference between any two adjacent grid points.

6) Only one septic system is listed in Table 11 for Building 20, now occupied by Mechanical Technology, Inc. (MTI). EPA and New York State understand that a new septic system was installed to replace an older system that served Building 20. We further understand that Ernest Haffner of MTI's Latham office (518/785-

2211) may have information regarding the location of the earlier system. Respondents should contact Mr. Haffner to determine the location of the earlier system and should propose a soil-gas survey for EPA review and approval.

7) Figure D-1: There are only four soil-gas grid points shown for the septic system near Building 13. No grid points are located at the southern cesspool and the cesspool sampling point are located upgradient of the cesspools.

Three additional soil-gas points should be added; one 25 feet northwest of the northern cesspool, one at the southern cesspool, and one 25 feet northwest of the southern cesspool. Figure D-1 should be revised accordingly.

8) Figure D-4: There are no upgradient sampling points to distinguish between soil vapor contamination from the Building 25 septic system and from the nearby fuel oil tank. One soil-gas sampling location should be added 25 feet south-southeast of the westernmost sampling point.

9) Figure D-5: No sampling point is proposed to distinguish between vapor contamination from the Building 14 septic system and the nearby underground gasoline tank. One additional soil-gas sampling point should be added between the septic system and the gasoline tank to the east of the septic system.

10) Figure D-12: As indicated above, the soil-gas grid must be expanded to cover the entire disposal area.

11) The other grids in the draft Literature Search Report are acceptable as proposed.

12) The information provided in the draft Literature Search Report is inadequate for EPA to determine that certain aboveground and underground storage tanks do not require soil-gas surveys.

<u>Certificates of Insurance</u>:

Under paragraph 55 of Administrative Order Index No. II CERCLA-90219 (the Order), Respondents must provide evidence of specific insurance for all contractors and subcontractors. The certificates of insurance submitted by Respondents are deficient for one or more of the following reasons:

1) insufficient information concerning the specific type(s) of coverage provided by the policy;
2) policy has expired or is nearing expiration; and
3) project organization does not list contractor.

Certificates of insurance for remaining subcontractors should be submitted to EPA seven (7) days before they commence work at the Site.

Literature Search Submittal:

EPA agrees to modify the RI Work Plan requirements for submittal of the Literature Search Report in the following manner. After receipt of EPA's comments on the entire draft Literature Search Report, Respondents shall submit a revised document entitled "Literature Search Report." When EPA approves the revised Literature Search Report, Respondents shall finalize the document. A Final Literature Search Report shall then be approved by EPA and referenced as an appendix to the RI Report, although a separately-bound document.

In a related matter, EPA would like to correct misstatements in your letter regarding 1) the inadequacy of time allowed for preparation and submittal of the draft Literature Search Report and 2) concurrent review by EPA and other Respondents. Respondents have known of the requirement of preparation of a literature search since September 28, 1989, when EPA issued the Administrative Order. The specific information required for the Literature Search, as well as the schedule for submittal, is set forth in the Remedial Investigation Work Plan, which EPA approved on February 11, 1991. Therefore, EPA cannot agree that any Respondent was precluded from review of the draft Literature Search by "the short time frame for preparation of and submittal of this document," as stated in your October 14, 1991 letter. Further, EPA expects Respondents to have completed their reviews prior to submittal to EPA, and any changes or corrections by Respondents after submittal should be identified to EPA in writing forthwith.

Health and Safety Plan Changes:

EPA has reviewed the changes to the Health and Safety Plan. The changes appear to adequately provide for the protection of human health and the environment. EPA does not approve Respondents' health and safety plans; PRPs are required to comply with Occupational Safety and Health Administration (OSHA) requirements.

If you have any questions regarding this matter, you may contact Ms. Alison Hess, Project Manager, at (212) 264-6040.

Sincerely yours,

Carole Petersen, Chief
New York/Caribbean Superfund Branch II

cc: J. Greco, NYSDEC

GE Corporate
Environmental Programs

December 24, 1991

RECEIVED
DEC 27 1991

Chief, New York/Caribbean Compliance Branch
U.S. Environmental Protection Agency
26 Federal Plaza - Room 737
New York, New York 10278
Attn: Alison Hess, Project Manager
Malta Rocket Fuel Area Site, Malta, NY

Chief, New York/Caribbean Compliance Branch
U.S. Environmental Protection Agency
26 Federal Plaza - Room 437
New York, New York 10278
Attn: Malta Rocket Fuel Area Attorney - Virginia Capon

Bureau of Eastern Remedial Action
Division of Hazardous Waste Remediation
NYS Department of Environmental Conservation
50 Wolf Road - Room 222
Albany, New York
Attn: Jon Greco, Project Manager
Malta Rocket Fuel Area Site, Malta, NY

Re: Malta Rocket Fuel Area Site - Request for Delay in Field Schedule, Request for Modifications in the Soil Boring Program and the Test Pit Excavation Program, and Clarification of Other Items (Source of Potable Water for Decontamination and Interim Soil Sample Storage)

Dear Ms. Hess et al.:

This letter requests EPA review and approval of a delay in the field schedule for implementation of the RI at the Malta Rocket Fuel Area site. It also presents a brief summary of the soil boring program as specified in the EPA approved Work Plan, Project Operations Plan (POP), and the draft Literature Search Report. The borings called for in the various approved documents appear to require duplication of effort, and therefore, we are requesting modifications to the soil boring program to reduce or eliminate this duplication. We are also requesting modification of the test pit excavation program to replace test pitting at the PTI pond and the pond behind Building 7 with soil borings due to problems with accessibility. Finally, this letter clarifies our plans regarding several items that were not addressed in detail in the project documents: the source of potable water for equipment decontamination and the

procedure for holding soil boring samples during the head space screening process required for the selection of which sample goes to the laboratory.

REQUEST FOR DELAY IN FIELD SCHEDULE

According to the schedule provided as Figure 6 in the POP, the soil boring and test pit excavation programs were to begin in the middle of December based on the late October/early November start up of the geophysical survey program. Delays in the soil gas program and holiday schedules have delayed the proposed start-up for both the soil boring and test pit excavation programs until January 6, 1991 as indicated in my letter of December 10, 1991.

As discussed with you during a phone conversation earlier this month, we still plan to conduct test pit excavations during the week of January 6, 1991, but we propose to delay the beginning of the soil boring program until approximately the end of March. The schedules for some subsequent tasks (monitoring well installation and groundwater sampling) will be also be delayed as a result. Our reasons for requesting this delay are as follows.

Need for Time to Review and Interpret Soil Gas Results

The selection of boring locations at most areas of concern is dependent on the results of the soil gas survey. Sampling and analysis of soil gas samples is currently scheduled for completion in mid-January 1992, but this schedule could be extended depending on how many additional probes need to be installed and sampled. Additional soil gas work may be required by EPA since our recommendations regarding the aboveground and underground tanks have not been approved by EPA. Finally, even when the soil gas sampling and analysis is completed, it will take some time to complete the review and interpretation of results to identify appropriate boring locations.

Potential for Changes in the Scope of the Boring Program

The Literature Search Report has not been finalized, and based on our previous conversations, it appears likely that EPA will, as a result of information provided in that report, require additional borings or other RI work. In addition, we have been revising the aboveground and underground tank inventory at EPA's request, and consequently, we have not received EPA approval of the recommendations for further investigation (or no further investigation). Because of the cost associated with mobilizing and demobilizing drilling crews, we are reluctant to start this program until we are certain that the scope of work will not be changed. We believe the soil boring program should

not begin until the Literature Search Report is finalized and all potential additional work to be required by EPA has been identified.

Adverse Weather Conditions

Maintaining the existing schedule would require conducting the soil borings program and the monitoring well installation during adverse winter weather conditions. Winter weather can cause delays and downtime due to site access and equipment freezing (or freezing prevention), which reduces the efficiency of the field work and may also compromise the schedule. Winter snow storms will inhibit access to or from a boring location depending on the amount of snow. Also, prevention of freezing requires time-consuming daily maintenance activities. Despite these efforts, equipment will still freeze up and require thawing. Cold weather conditions also require more frequent personal safety breaks and more delays. The soil boring program and the monitoring well installation tasks could be conducted more safely and efficiently if delayed until approximately late March.

Our proposed revised schedule will include the following activities during January, February and March 1992 when the soil borings program is delayed. During January, ERM will continue the soil gas sampling and analysis, and begin reviewing and interpreting results. Additional probes, if necessary will be installed and sampled. The test pit excavations will also be completed. Geraghty & Miller will revise the Literature Search Report in response to EPA's comments.

In February, while EPA is reviewing the revised Literature Search Report, ERM will complete its review and interpretation of the soil gas results. It will begin work on the RI report, by preparing the methods and results sections for the tasks that have been completed, and the methods sections for tasks that have not yet been performed.

In March, we anticipate remaining issues regarding the scope of the remaining field tasks will be resolved. ERM will plan for mobilization at the end of the month for the soil boring program. It will also continue working on the RI report.

If this revised schedule is approved, we are confident it will result in a safer and more efficient implementation of two critical field tasks: the soil boring program and the monitoring well installation. By delaying these tasks until the weather is improved, the overall time needed to complete these tasks will be decreased, and we will have a good start on the RI report. We will try to adjust the timing of the remaining tasks so that we can still complete the RI and submit the draft report to EPA within the existing schedule. A draft copy of the proposed revised schedule is attached.

SUMMARY OF THE SOIL BORING PROGRAM

The soil boring program is described in Section 4.5 and Sections 4.11 to 4.30 of the Work Plan, Section 5.9 and Figure 4 of the POP, and Sections 9.0 and 11.0, Table 9, and Figure 9 of the Literature Search Report. Within the 26 areas of concern, a total of 110 soil borings are required, with the collection of 123 soil samples. All 123 soil samples are to be sent for laboratory analysis (TCL plus boron and benzyl alcohol) using Contract Laboratory Program (CLP) protocols. The analysis of one soil sample from the former GE/Exxon Nuclear Facility is to be analyzed for radiation parameters (POP, p.5-23). Table 10 of the POP indicates the laboratory will analyze for Gross Alpha and Beta radiation and any site-specific radionuclides. The Literature Search Report identifies two site specific radionuclides (cobalt 60 and uranium hexafluoride), which were used at the former GE/Exxon Nuclear facility.

The exact location of the borings will be determined based on the results of the soil gas sampling program, which is currently underway, and on site-specific topographic features, building layouts and underground utilities. Borings will be advanced in 1) the areas of elevated volatile organic soil gas concentrations, 2) in areas of existing or historic chemical storage tanks, 3) within septic tank leach fields and 4) at three background locations. The borings will be continuously sampled using two or three inch diameter split spoons to depths of at least six feet until two feet of natural soil below the base of fill is encountered below storage and disposal areas, or to a depth just below the base of the leach fields. Therefore, the boring depths could range from six feet to greater than 30 feet.

The samples sent for laboratory analysis will be chosen based on field head space analysis for volatile organic compounds (VOCs). Soil from each split spoon collected from a boring will undergo the head space screening. The soil sample exhibiting the highest VOC head space reading will be sent to the laboratory for analysis. If no soil sample within a boring exhibits elevated VOC readings, then the sample to be sent to the laboratory will be chosen based on visual appearance. The soil samples collected from the former GE/Exxon Nuclear Facility will be screened with a real-time radiation detector in the field.

REQUEST FOR MODIFICATIONS IN SOIL BORING PROGRAM

In preparing the summary above, ERM noted duplication of efforts within the boring program. For some areas of concern, it appears that more borings are specified than may be necessary. This has occurred because of: overlaps associated with the storage tank, leach field, and soil boring program investigations and overlaps between the governing documents.

The POP specifies borings as part of the subsurface investigation, and then it requires additional borings at rocket gantries/test complexes, at identified aboveground and underground storage tanks, and at septic tanks/leach fields. Duplication of effort has been identified in the following areas of concern:

Building 1
Building 2
Building 3
Building 4
Building 20 (MTI)
Building 25 (PTI)
Building 28 (Area A)

Table 1 (attached) identifies the total number of borings currently required at each area of concern, and the total number of borings proposed. We consider six of the eight tank borings required for Area A/Building 28 (which is only 50 feet by 250 feet) to be unnecessary because there are six soil borings already planned for that area as part of the subsurface investigation. An additional two borings will be sufficient to detect any tank leakage or spillage. We recommend reducing the number of borings at this area from 14 to 8.

At PTI, the gantry borings will serve the same purpose as the tank borings. Either steep slopes, buried building or other access problems limit placing the borings at specific tank locations. We recommend reducing the number of borings from 7 to 5.

Likewise, we consider the tank borings required for Buildings 1,2,3, and 4 to be unnecessary because the borings planned for these areas as part of the subsurface investigation would also detect evidence of potential tank spillage or leakage from the tanks identified for further investigation.

At MTI/Building 20, we consider the two borings required to assess the lagoon to be unnecessary because borings for Building 20M and Building 20 would also assess this area. We recommend reducing the number of borings from 8 to 6.

Although proposed boring locations are shown on Figure 4 (POP) and Figure 9 (Literature Search Report), the soil borings are required to be located at soil gas hot spots. Utility lines (which are very dense around Area A/Building 28 and Buildings 1, 2, 3, and 4) will also affect the selection of boring locations. Also, site topography and the structural design of the underground buildings and test gantries limits flexibility for boring placement. Therefore, specific boring locations will be selected in the field.

REQUEST FOR CHANGES IN THE TEST PIT EXCAVATION PROGRAM

Because topographic conditions will prevent vehicular access to the PTI pond and the pond behind building 7, we are requesting that the test pits planned for these areas be replace with borings drilled using a tripod drill rig.

The PTI pond is in a topographically low area behind Building 25H. ERM's reconnaissance of the pond prior to initiating the test pit excavation program indicated it is inaccessible to vehicles (i.e. the backhoe and support vehicles with emergency equipment). It has several large trees (greater than 4 inch diameter) growing out of its bottom and steep side slopes. One slope is the back of Building 25H, and a piping network (two suspended three inch diameter steel pipes) crosses another side slope. Because of the inaccessibility to vehicles, we recommend replacing the two planned test pits with three soil borings, which will be drilled using a tripod drill rig.

Similarly, the pond behind building 7 is also difficult to access with the backhoe and support vehicles. At this pond, steep side slopes and cut trees prevent reasonable access. We recommend replacing the test pit planned for this area with two borings using a tripod drill rig.

CLARIFICATION OF ITEMS IN POP

Source of Potable Water for Decontamination

Specific decontamination procedures that must be followed during the soil boring program are provided in Section 5.9.5 of the POP. These procedures describe the use of steam cleaning for the drilling (and test pitting) equipment, although the source or type of water to be used in the steam cleaner is not specified. Since potable water is specified as the first rinse for sampling equipment, we plan to use potable water in the steam cleaners.

The EPA QA/QC manual specifically prohibits the use of untreated potable water supplies for equipment decontamination. The source of potable water for the RI will be the Wright-Malta water supply, which is treated and sampled for analysis monthly. Analytical results for the Wright-Malta water were provided in Appendix C of the Literature Search Report. This water supply contains low concentrations (less than 5 ppb) of carbon tetrachloride and trichloroethene. However, the heating effect of the steam cleaners will drive-off residual solvent. Therefore, ERM anticipates no problem with residual contamination from steam-cleaning of drilling and excavation equipment using the on-site treated potable water.

Interim Soil Sample Storage

As stated in Section 5.9.3 of the POP, a portion of each split spoon sample will be placed in a jar for headspace screening. At the same time, the rest of the split spoon sample will be placed in another jar and stored on ice until the headspace screening of all samples from that boring is completed. Based on the results of the headspace screening, the sample to be sent for laboratory analysis will be identified. At that time, the selected soil sample will be placed in certified 300 grade sample containers for laboratory shipment. The interim storage jar will be a 950 ml wide-mouthed, amber glass jar (certified 200 grade).

As the boring program is scheduled to begin on January 6, 1991, please let us know of your reponse to the requested schedule delay by December 31, 1991.

Please call if you have questions or require additional information.

Very truly yours,

Barbara C. Hotchkin

Barbara Hotchkin
Facility Coordinator

cc: Hal Brodie, NYSERDA
Dennis Colton, Geraghty & Miller
Don Hooker, US Army Corps of Engineer
Jane Gardner, Esq., GE
Philip Gitlen, Esq, Whiteman, Osterman, and Hanna
William Miller, ERM
Angus Macbeth, Esq.,/Peggy O'Brien, Esq., Sidley and Austin
August Spallo, Esq., US Army Corps of Engineers

TABLE 1
MALTA ROCKET FUEL AREA
NUMBER OF SOIL BORINGS BY AREA OF CONCERN

LOCATION	Soil Boring Program	Storage Tank Borings	Leachfield Borings	Total Borings Required	Total Borings Proposed
Building 1	4	4	-	8	6
Building 2	2	4	-	6	4
Building 3	4	6	-	10	8
Building 4	4	4	-	8	6
Building 5	4	-	-	4	4
Building 6	2	-	-	2	2
Building 13	-	-	1	1	1
Building 14	-	-	1	1	1
Building 15	2	-	-	2	2
Building 17	-	-	1	1	1
Building 20 (MTI)	6	-	2	8	6
Building 21	2	-	-	2	2
Building 24	2	-	-	2	2
Building 25 (PTI)	4	2	1	7	5
Building 28(AREA A)	6	8	-	14	8
ISOLDE	-	2	-	2	2
GE/EXXON	2	-	1	3	3
D-1	1	-	-	1	1
D-2	3	-	-	3	3
D-3	2	-	-	2	2
S-1	2	-	-	2	2
S-2	2	-	-	2	2
S-3	3	-	-	3	3
S-4	3	-	-	3	3
S-5	2	-	-	2	2
S-6	2	-	-	2	2
S-8	2	-	-	2	2
S-9	2	-	-	2	2
S-10	2	-	-	2	2
Background	3	-	-	3	3
TOTAL	73	30	7	110	92

-318-132-6325 ERM-NORTHEAST 32:20 ...

GE Corporate
Environmental Programs

RECEIVED
FEB 4 1992

January 28, 1992

Chief, New York/Caribbean Compliance Branch
U.S. Environmental Protection Agency
26 Federal Plaza - Room 737
New York, New York 10278
Attn: Alison Hess, Project Manager
Malta Rocket Fuel Area Site, Malta, NY

Chief, New York/Caribbean Compliance Branch
U.S. Environmental Protection Agency
26 Federal Plaza - Room 437
New York, New York 10278
Attn: Malta Rocket Fuel Area Attorney - Virginia Capon

Bureau of Eastern Remedial Action
Division of Hazardous Waste Remediation
NYS Department of Environmental Conservation
50 Wolf Road - Room 222
Albany, New York
Attn: Jon Greco, Project Manager
Malta Rocket Fuel Area Site, Malta, NY

Re: Malta Rocket Fuel Area Site - Confirmation of Conversations Regarding Relocation of Surface Metal from Area D-4 and USEPA Statement of Work to be Used for Analysis of Samples

Dear Ms. Hess et al.:

<u>Relocation of Surface Metal from Area D-4</u>

According to its letter of December 23, 1991 (and a phone conversation on December 6, 1991), EPA is requiring Respondents to move the surface metal at Area D-4 prior to conducting the geophysical survey at the area. EPA also required the Respondents to provide EPA with the plans for relocating the surface metal prior to undertaking this effort.

ERM worked closely with Wright-Malta during December to identify suitable locations for relocating the Area D-4 surface metal. There are very few open areas on-site, and therefore, it was difficult to identify areas that would not adversely affect either Wright-Malta's ongoing operations at the site or the remedial investigation. Two possible locations were identified. One of these locations, an area between Area D-2 and the pond, was eliminated before it could be proposed to EPA, due to comment 55 in EPA's letter, which requires Respondents to propose investigation of this area.

The second area, located west of Area D-5 and across the road, was proposed to EPA in a fax on December 30, 1991 (copy attached). Alison Hess, Barbara Hotchkin, and Bill Miller discussed relocation of the Area D-4 surface metal to this site in a phone conversation on December 31, 1991. However, soil gas results from Area D-5 indicate levels of carbon tetrachloride of 35 ppb at the western edge of the site near the road, and extension of the soil gas grid across the road and into the area proposed for relocating the Area D-4 surface metal is necessary. Since it is possible that additional investigation may also be necessary, EPA would only be able to approve use of this site with the stipulation that the surface metal may have to be moved again to another location. Due to this problem, we agreed that it is premature to move the surface metal until we are confident that the location selected is suitable, and that the material would not have to be moved again. We agreed that the test pit excavation program scheduled for the week of January 6, 1992, including Area D-4, would proceed as scheduled. Relocation of the Area D-4 surface metal is deferred until approximately March or April 1992, following review of all soil gas results and approval of the additional investigations to be proposed by Respondents pursuant to EPA's December 23, 1991 letter.

Subsequent to this phone conversation, on January 14, 1992, Alison Hess and Mel Hauptman (EPA), Barbara Hotchkin (GE), and Bill Miller (ERM) conducted a site visit that included Area D-4. At the time of the site visit, considerable surface metal had been relocated from the area by Wright Malta, and the test pit excavation and sampling had been conducted. Based on the results of the soil gas survey, test pit excavation, and sampling at Area D-4, EPA expressed its willingness to reevaluate its position. Respondents will submit the results of the soil gas survey, test pit excavation, and sample analysis in a future letter to EPA with a proposal regarding Area D-4.

<u>EPA Statement of Work to be Used for Analysis of Samples</u>

On December 18, 1991, Alison Hess, Barbara Hotchkin, and Douglas Wolf (ERM) discussed the EPA Contract Laboratory Program Statements of Work (CLP SOW) to be followed during laboratory analysis of samples obtained during the remedial investigation.

In its July 19, 1991 letter, EPA required the use of CLP SOWs OLC01 and ILC01 for organic and inorganic analyses of samples (comment 36). As we stated during the December 18, 1991 telephone conversation, the CLP SOWs referenced in the July 19, 1991 letter are not finalized documents, but are currently in the draft stage, and there are no contracts out for these SOWs. In addition, the code references used for these SOWs (OLC01 for organics analysis and ILC01 for inorganics analysis) appear to be internal codes for EPA use only. The cover pages of these documents (copies attached) are titled "Superfund Analytical Methods for Low Concentration Water for Organics Analysis" dated 6/91 and "Superfund Analytical Methods for Low Concentration Water for Inorganics Analysis" dated 10/91; they contain no SOW code references. As can be seen from the titles of these documents, they are intended for low concentration analyses of aqueous samples and are not intended to be used for analysis of solid matrix samples such as soils, sediments or sludges.

During the conversation, we determined that comment 36 is incomplete, since it does not identify the CLP SOWs for other matrices. The 1990 CLP SOWs, which we are required to use in accordance with EPA's July 19 and 26, 1991 letters, for multi-media, multi-concentration analyses are titled:

> EPA Contract Laboratory Program Statement of Work For Organics Analysis Multi-Media, Multi-Concentration Document Number OLM01.0 including revisions OLM01.1 (December 1990), OLM01.2 (January 1991), OLM01.3 (February 1991), OLM01.4 (March 1991), OLM01.5 (April 1991), OLM01.6 (June 1991), OLM01.7 (July 1991) and OLM01.8 (August 1991), and
>
> EPA Contract Laboratory Program Statement of Work for Inorganics Analysis Multi-Media, Multi-Concentration Document Number ILM01.0.

The use of these SOWs will allow solid matrix samples to be analyzed according to current EPA CLP protocols and will also allow first round water sample characterization without imposing unnecessary analytical requirements on samples with unknown concentrations of compounds or analytes of interest. Until the chemical characteristics of the water samples are known, the use of low level analytical methods is unnecessary. Samples may contain large concentrations of one or more compound of interest, and would then require sample dilutions in order to adequately quantitate sample concentrations. Water samples will be characterized during the first round using the multi-media, multi-concentration methods, although in the second round, EPA may require the use of low concentration methods to further characterize the content of the groundwater.

Please call if you have questions or require additional information.

Very truly yours,

Barbara Hotchkin
Facility Coordinator

Attachments

cc: Hal Brodie, NYSERDA
Dennis Colton, Geraghty & Miller
Don Hooker, US Army Corps of Engineer
Jane Gardner, Esq., GE
Philip Gitlen, Esq, Whiteman, Osterman, and Hanna
William Miller, ERM
Angus Macbeth, Esq.,/Peggy O'Brien, Esq., Sidley and Austin
August Spallo, Esq., US Army Corps of Engineers
Raymond Kazyaka, Wright-Malta

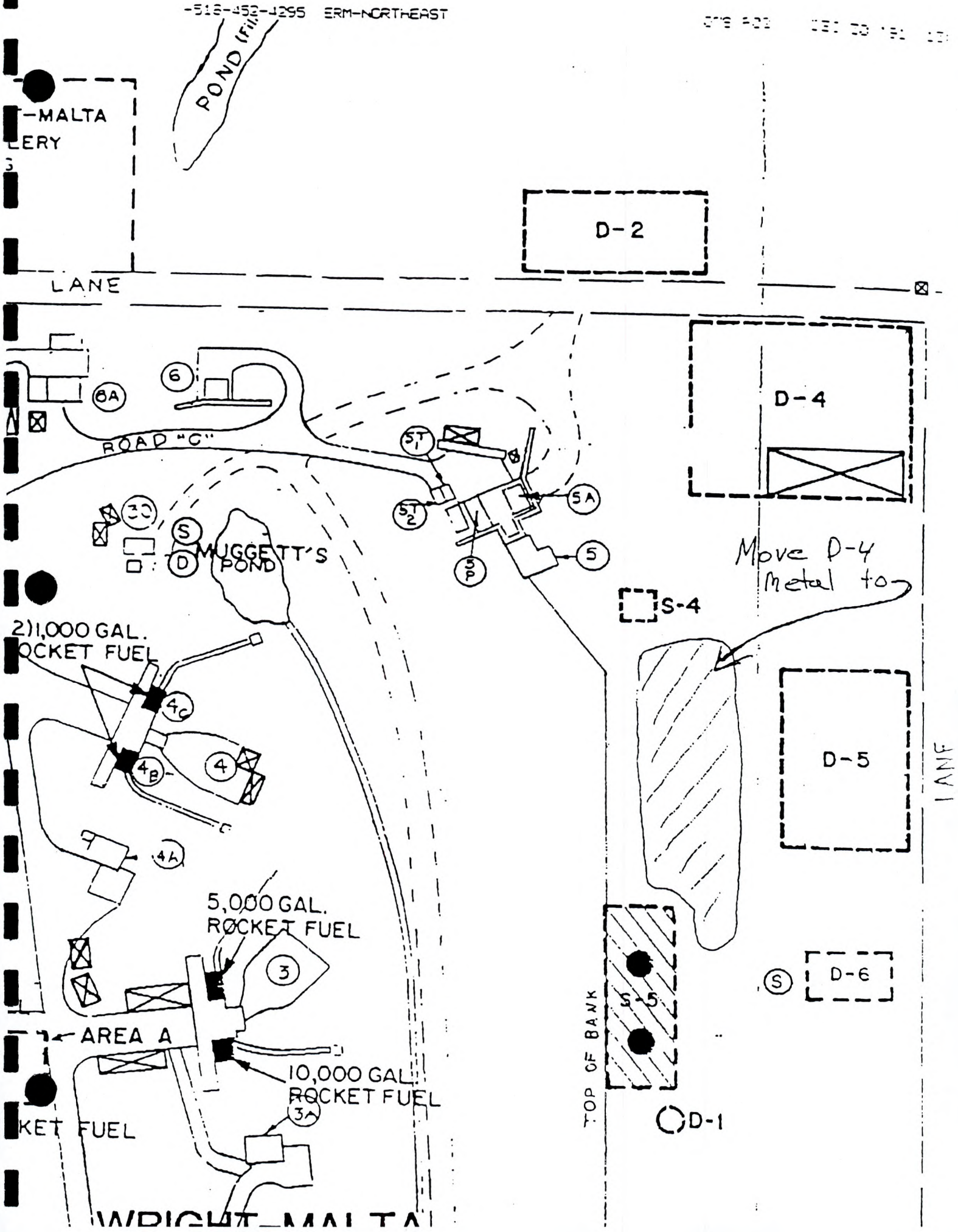
POND (Fill)
-MALTA
LERY
D-2
LANE
D-4
6
6A
ROAD "C"
ST1
ST2
5A
5
SP
30
S
D
MUGGETT'S POND
Move D-4 metal to
S-4
2)1,000 GAL.
OCKET FUEL
4C
4B
4
4A
D-5
LANE
5,000 GAL.
ROCKET FUEL
3
AREA A
10,000 GAL.
ROCKET FUEL
3A
KET FUEL
TOP OF BANK
S-5
S
D-6
D-1
WRIGHT-MALTA

SUPERFUND ANALYTICAL METHODS

FOR

LOW CONCENTRATION WATER FOR ORGANICS ANALYSIS

6/91

USEPA CONTRACT LABORATORY PROGRAM

STATEMENT OF WORK

FOR

ORGANICS ANALYSIS
Multi-Media, Multi-Concentration

Document Number OLM01.0
Including Revisions OLM01.1 (December 1990),
OLM01.2 (January 1991), OLM01.3 (February 1991),
OLM01.4 (March 1991), OLM01.5 (April 1991),
OLM01.6 (June 1991), OLM01.7 (July 1991),
and OLM01.8 (August 1991)

SUPERFUND ANALYTICAL METHODS

FOR

LOW CONCENTRATION WATER FOR INORGANICS ANALYSIS

10/91

USEPA CONTRACT LABORATORY PROGRAM

STATEMENT OF WORK
FOR
INORGANICS ANALYSIS

Multi-Media
Multi-Concentration

Document Number ILM01.0

GE Corporate
Environmental Programs

April 22, 1992

APR 23 1992

Chief, New York/Caribbean Compliance Branch
U.S. Environmental Protection Agency
26 Federal Plaza - Room 737
New York, New York 10278
Attn: Alison Hess, Project Manager
Malta Rocket Fuel Area Site, Malta, NY
(3 copies)

Chief, New York/Caribbean Compliance Branch
U.S. Environmental Protection Agency
26 Federal Plaza - Room 437
New York, New York 10278
Attn: Malta Rocket Fuel Area Attorney - Virginia Capon
(1 copy)

Bureau of Eastern Remedial Action
Division of Hazardous Waste Remediation
NYS Department of Environmental Conservation
50 Wolf Road - Room 222
Albany, New York
Attn: Jon Greco, Project Manager
Malta Rocket Fuel Area Site, Malta, NY
(3 copies)

Re: Malta Rocket Fuel Area Site - Handling, Storage and Disposal of Investigation-Derived Wastes

Dear Ms. Hess:

During the course of the remedial investigation (RI) at the Malta Rocket Fuel Area site, various investigation-derived wastes (IDW) will be generated, and they will require appropriate handling, storage, and disposal. This letter amends the RI Work Plan and the Project Operations Plan (POP), and provides Respondents' proposal for handling and storage of hazardous and non-hazardous IDW generated during the RI. We propose to defer the issue of disposal of hazardous IDW until later in the investigation, as discussed in the final section of this letter.

Respondents' proposal for management of the various categories of wastes generated by RI activities is consistent with "Guide to Management of Investigation-Derived Wastes" (OSWER Publication 9345.3-02FS, May 1991), "Management of Investigation-Derived Wastes During Site Inspections" (EPA/540/G-91/009, OERR Directive 9345.3-02, May 1991) and pertinent New York State Technical and Administrative Guidance Memoranda (TAGM).

WASTE MANAGEMENT ACCORDING TO THE WORK PLAN AND POP

The RI Work Plan and POP generally address waste management for drill cuttings, well water, and waste products. These documents indicate that cuttings and fluids generated during drilling and development and purging of wells will be temporarily drummed until they can be removed from the drilling area for disposal (POP, p.5-30). They further indicate that the method of disposal will be determined after the analytical program is complete and the nature of the cuttings and fluids can be determined, and that disposal will be addressed during the FS (Work Plan, p.67). This letter amends the Work Plan and POP, and presents an approach that allows us to more fully achieve EPA's objective to minimize the quantity of such wastes (as indicated in the aforementioned EPA documents).

PROPOSED IDW HANDLING

The IDW generated includes decontamination rinsates, drill cuttings, personal protective equipment (PPE) and disposable equipment (DE), well water, steam generator rinsate, sampling glassware, excavated chemical wastes and miscellaneous office debris. These wastes are described briefly below, along with Respondents' proposal for handling, and as necessary, containing each type of waste. Contained wastes, with the exception of miscellaneous office debris, will be treated as hazardous until determined to be non hazardous based on analytical results.

Decontamination Rinsate

Decontamination rinsates are solutions of analyte-free water, methanol, hexane, nitric acid, alconox soap, and any residual contamination generated through decontamination of sampling equipment (glass, soil gas sampling bulbs, stainless steel scoops, bowls, and knives, bailers, and split spoons). These rinsates may be hazardous because they contain small amounts of methanol, hexane, and nitric acid in water. These solutions are collected in wash basins, and are then transferred into 55-gallon drums.

Drill Cuttings

Drill cuttings are the materials brought to the surface while drilling soil borings or during monitoring well installation. The cuttings will be predominantly soil, although there is a potential that buried waste may be encountered in some locations and brought to the surface by the augers.

On March 24, 1992, Respondents proposed to dispose of drill cuttings generated during the soil boring program on-site in a manner consistent with the New York State guidance (Final Division TAGM - Disposal of Drill Cuttings, dated November 1989). This proposal was accepted by EPA in its letter dated March 26, 1992. These drill cuttings will be disposed within the borehole upon completion of the borehole subject to the following:

- the boring will not be used for installation of monitoring wells;
- the boring did not penetrate an aquitard or an aquiclude; and
- bentonite will be added to the cuttings to reduce permeability and inhibit vertical movement of fluids or vapors.

Drill cuttings generated during installation of monitoring wells are categorized as follows: drill cuttings from above the water table and drill cuttings from below the water table. With regard to drill cuttings from above the water table, Respondents propose to place the cuttings on the ground surface at the boring location and rake the cuttings level with the ground. An exception to this will be drill cuttings generated in source areas. Source areas will be defined as areas that result in a reading of greater that 25 ppm during field screening with a PID, or any areas known to contain hazardous constituents that would not be detected on the PID (i.e. PCBs). Drill cuttings from such source areas will be containerized as described in the next paragraph.

EPA has indicated that drill cuttings from below the water table should be considered potentially contaminated by the suspected groundwater plume. Therefore, Respondents propose to containerize these drill cuttings in 55-gallon drums, which will remain at the boring locations until receipt of analytical results from the monitoring well installed at that location. If the results indicate the groundwater does not contain hazardous constituents, the drummed soil cuttings will be placed on the ground surface at the boring location and raked level with the ground. If the groundwater does contain hazardous constituents, the drummed soil will remain containerized for future treatment or disposal.

<u>Personal Protective Equipment (PPE) and Disposable Equipment (DE)</u>
PPE is the clothing worn during sample collection activities (vinyl disposable gloves and poly-coated disposable tyvek overalls). Disposable equipment (DE) includes aluminum foil, paper towels, and polyethylene sheeting used for sampling. PPE and DE are considered potentially hazardous since they may have come in contact with contaminated soil or water during sampling. These disposable items will be placed in 55-gallon drums for future disposal.

DE also includes disposable bailers, leaders, and rope used to sample septic systems. These items will be put in dedicated polyethylene garbage bags and placed in a 55-gallon drum. The analytical results from sampling the associated septic system will indicate if the bailers and debris should be handled as hazardous or non-hazardous. If a sample contains non-hazardous constituents, then the associated bailer and garbage bag will be treated as solid waste. If a

sample contains hazardous constituents, then the associated bailer and debris will remain in the drum for future disposal.

Well Water

This water includes the groundwater pumped out of all newly installed wells during well development and the groundwater purged out of all the wells prior to sampling. Respondents propose to discharge groundwater generated during development and purging of monitoring wells on the ground near the well and allowing it to infiltrate into the ground. Soils at the site are generally sandy, and groundwater released to the ground surface would infiltrate back into the aquifer from which it came fairly quickly, leaving the aquifer in the same condition that it was prior to the investigation.

Steam Generator Rinsate

Steam generator rinsate results from decontamination (steam-cleaning) of the drilling equipment (augers, drill rods, auger plugs, tools, and possibly portions of the drill rig). It is collected from the sump in the decontamination pad. The rinsate in the sump will be pumped into 55-gallon drums at least once a week for future disposal.

Sampling Glassware

As a part of the soil boring program, a portion of all soil samples must be placed in 40 milliliter (ml) sampling bottles before determining which sample is to be sent for laboratory analysis. Since only one sample per boring is being sent for laboratory analysis, a considerable number of 40 ml bottles filled with soil are generated. As appropriate, the soil from these bottles is placed back in the borehole from which it came, or in the container of drummed soil if soil from that boring was containerized. The empty sample bottles are placed in 55-gallon drums for future disposal.

Chemical Wastes

During the test pit excavation program, buried chemical waste material was encountered in one test pit and excavated. This material was sampled and determined to be sodium hydroxide, which is a corrosive hazardous material. This material, and other such materials that may be encountered, will be stored in 55-gallon drums or overpack drums, as necessary, for future disposal.

Miscellaneous Office Debris

Miscellaneous office debris includes paper, boxes, food wraps, clean broken glassware, and other general waste products generated from the field office. Since these waste products do not come in contact with contaminated media, they are treated as non-hazardous office waste and will be placed in the office dumpster. The dumpster is emptied every other week by C&B Sanitation, a permitted solid waste hauler.

IDW STORAGE

Respondents intend to substantively comply with RCRA substantive provisions, to the maximum extent practical, especially regarding the condition of containers and labeling of containers. Additionally, we would like to set up and maintain a secure central storage area in Building 25S. We believe that maintaining a central storage area is preferable to leaving filled IDW drums at the various locations at which they were generated. In furtherance of CERCLA's statutory preference under Section 121(b) for on-site remedies, the central storage area should be considered a part of the same area of contaimination (AOC) as those parts of the site in which remedial work may eventually be undertaken. If the central storage area is not considered part of the AOC, the land ban restrictions would be triggered. Therefore, Respondents request that EPA designate the entire site an AOC. If such a designation is made, Respondents propose to set up and maintain a central storage area in Building 25S, rather that leaving filled drums in the locations at which they were generated.

Building 25S is approximately 200 feet by 75 feet, and it has a concrete floor. If used for the central storage area, the containerized wastes described in the previous section will be moved to Building 25S and placed on pallets. All containers will be kept closed except when adding or removing waste. Containers will be segregated according to waste category. Aisles will be maintained between pallets to allow periodic drum inspections. All drums will be labelled and dated in accordance with RCRA requirements. The drum storage area will be labelled as a 'Hazardous Waste Storage Area' and with 'No Smoking' signs. Records identifying waste type (according to the categories defined previously in this letter), accumulation dates, and container condition will be maintained and kept on-site, either at the field office or at Building 25S.

With regard to storage in excess of 90 days, it is our understanding that no permit is needed since Superfund sites are exempted from the RCRA permit requirements under CERCLA. Pursuant to 42 U.S.C. § 9621(e)(1), "No Federal, State, or local permit shall be required for the portion of any removal or remedial action conducted entirely on site ...". Moreover, storage of IDW until a final disposal option is selected in a ROD is also allowable under the RCRA LDR storage prohibition. Accordingly, we do not believe that we must apply for or obtain RCRA permits to store waste on site for more than 90 days. Respondents propose to accumulate waste until the ROD is finalized, and possibly until a selected remedial action is implemented, in the event that any wastes generated during the RI can be treated or disposed on site during any potential remedial action.

Respondents request a determination of non-applicability, or alternatively, a waiver on other RCRA requirements, including but not necessarily limited to those noted below:

- preparation of a RCRA Contingency Plan (in consideration of the RI Health and Safety Plan, already prepared for this site);

- RCRA personnel training (in consideration of OSHA training already required for personnel performing the RI);
- single drum satellite accumulation requirements (Satellite accumulation areas will be maintained at monitoring well locations until analytical data are available to determine if drummed cuttings are hazardous. This accumulation could be greater than a single 55-gallon drum);
- biennial and exception reporting.

WASTE CHARACTERIZATION

Respondents propose that IDW generated and other wastes encountered during RI activities should not be considered listed waste(40 C.F.R. § 261.31, et seq.), and should be classified as hazardous waste only if characteristic (40 C.F.R. § 261.20, et seq.). This proposal is justified because we have no reason to believe that any of the manufacturing activities described in the K series of RCRA wastes existed at the site, and because solvent chemicals specified in the F series were not used exclusively for purposes that would result in an "F" listing. An example of this is carbon tetrachloride. Carbon tetrachloride was reportedly used as a cleaning and degreasing solvent, but it was also used for corrosion control and as a flame retardant.

When a particular chemical is found at the site, it is not a practical possibility to determine whether it is associated with a listed or characteristic waste. Efforts to determine the historical usage of particular chemical samples would not be fruitful, and therefore, should not be required. This approach is consistent with EPA's determination that if documentation regarding the origin of the waste is lacking, "the lead agency may assume it is not listed waste" 55 C.F.R. 8758. Respondents propose that chemical wastes (i.e. the buckets of sodium hydroxide excavated during the test pit program) and drummed IDW (containing chemicals such as carbon tetrachloride) be subjected to the characteristics tests (40 C.F.R. § 261, Appendix II) for ignitability, corrosivity, reactivity and TCLP toxicity to determine whether they are characteristic hazardous waste. If such wastes fail any one of the tests, they will be treated as hazardous, and disposed accordingly.

ANALYTICAL REQUIREMENTS

Analytical requirements will consist of those already required in the POP for wastes encountered while test pitting. The RCRA waste characterization parameters (ignitability, corrosivity, reactivity, and TCLP) will be performed as necessary on representative samples of all other IDW collected and stored on-site. For example, with regard to drums of sampling glassware, a representative composite sample of the drummed material or a rinse sample will be analyzed to determine if the drum(s) can be disposed as hazardous waste or solid waste. Similarly, a representative sample of the drummed steam generator rinsate water will be analyzed to determine if the rinsate is hazardous or non-hazardous. If the rinsate is non-hazardous, it will be discharged on the ground in the vicinity of the decontamination pad. If the rinsate is determined to be hazardous, drums will continue to be stored for future disposal.

Hazardous wastes to be transported off site for disposal must be accompanied by a manifest. Other analytical tests necessary to characterize the wastes for off-site treatment or disposal will also be conducted.

DISPOSAL OF HAZARDOUS IDW

We propose to defer the issue of disposal of hazardous IDW until later in the investigation, after we have a better understanding of the quantities and types of material requiring disposal, and after the ROD has been finalized. Depending on the remedy selected, it may be possible to treat and dispose of some wastes on site. This option, and other options such as disposal of aqueous liquids at a Publicly Owned Treatment Works or transportation of wastes by a licensed hazardous waste hauler to a TSD facility, will also be evaluated at that time.

Please call if you have questions or require additional information.

Very truly yours,

Barbara Hotchkin

Barbara Hotchkin
Facility Coordinator

cc: Hal Brodie, NYSERDA
Don Hooker, US Army Corps of Engineer
Jane Gardner, Esq., GE
Philip Gitlen, Esq, Whiteman, Osterman, and Hanna
William Miller, ERM
Angus Macbeth, Esq.,/Kevin Kimball, Esq., Sidley and Austin
August Spallo, Esq., US Army Corps of Engineers

Post-it™ brand fax transmittal memo 7671 | # of pages ▸ 2

To Bill Miller	From Barb Hotchkin
Co.	Co.
Dept.	Phone #
Fax # 452-4215	Fax #

UNITED STATES ENVIRONMENTAL PROTECTION AGENCY
REGION II
JACOB K. JAVITS FEDERAL BUILDING
NEW YORK, NEW YORK 10278

MAY 5 1992

BY FACSIMILE and CERTIFIED MAIL-- RETURN RECEIPT REQUESTED

Barbara Hotchkin
Facility Coordinator
General Electric Company
1 Computer Drive South
Albany, NY 12205

Re: Malta Rocket Fuel Area Superfund Site, Towns of Malta and Stillwater, Saratoga County, New York

Dear Ms. Hotchkin:

By this letter, the U.S. Environmental Protection Agency ("EPA") is responding to your April 22, 1992 letter, which presents Respondents' proposal for modification of the Remedial Investigation ("RI") Work Plan and Project Operations Plan with respect to the handling, storage and disposal of investigation-derived wastes ("IDW"). EPA is also responding to your April 28, 1992 letter, which contains Respondents' proposal for modification of the dry well sampling program. Lastly, EPA responds to the recent submittal of Respondents' May 1992 Literature Search Report.

Investigation-Derived Waste

EPA approves Respondents' April 22, 1992 proposal with the following exceptions:

1) p. 2, Decontamination Rinsate. Decontamination rinsates shall be stored in 55-gallon drums for future treatment and/or disposal.

2) p. 3, 2nd paragraph, Drill Cuttings. Monitoring well drill cuttings shall be drummed if they result in a PID headspace reading of 5 ppm or greater.

3) p. 4, Well Water. In general, ground water from well development and purging prior to sampling shall be allowed to infiltrate into the ground at each respective well location. Such disposal must be through a hole dug near the well from which the ground water was removed. If free product is encountered or data indicate that soils are highly contaminated, well water shall be containerized and analyzed for future treatment and/or disposal.

PRINTED ON RECYCLED PAPER

4) p. 5., IDW Storage.
a) 1st paragraph. While EPA approves of the use of Building 25S as a central storage area, EPA considers Respondents' proposal that it designate the entire Site a single area of contamination ("AOC") to be incomplete. An AOC is an area delineated by contiguous contamination; Superfund sites can consist of one AOC, or more if there are discrete, widely separated areas of contamination. Regardless, delineation of AOC(s) at a site requires review of environmental data. Based upon such data, EPA may determine that the Site consists of a single AOC or two or more AOCs (e.g., the Test Station and the area near the GE/Exxon Nuclear Building).

b) last paragraph. On-site Superfund actions are only required to comply with the substantive requirements of other laws to the extent practicable. Therefore, Respondents are not required to meet the administrative requirements listed in the first, second, and fourth bullets. Additionally, Respondents are not limited to the single drum satellite accumulation requirements mentioned in the third bullet.

5) p. 6, Waste Characterization. RCRA listed wastes are known to have been generated at the Site. Based on the derived from rule, the mixture rule, and the contained-in interpretation, IDW waste is considered to be a listed waste and must be managed accordingly.

Dry Well Sampling

EPA approves the modification to the dry well sampling plan as submitted. However, EPA may require additional investigation of dry wells, floor drains, catch basins, etc. later in the RI.

Literature Search Report

On May 5, 1992, EPA received Respondents' Literature Search Report for the Malta Rocket Fuel Area Superfund Site, Towns of Malta and Stillwater, Saratoga County, New York, Vols. I and II, dated May 1992, by cover letter dated April 29, 1992. The Literature Search Report is approved as submitted.

If you have any questions regarding this matter, please contact Ms. Alison Hess, Project Manager, at (212) 264-6040.

Sincerely yours,

Carole Petersen, Chief
New York/Caribbean Superfund Branch II

CC: J. Greco, NYSDEC