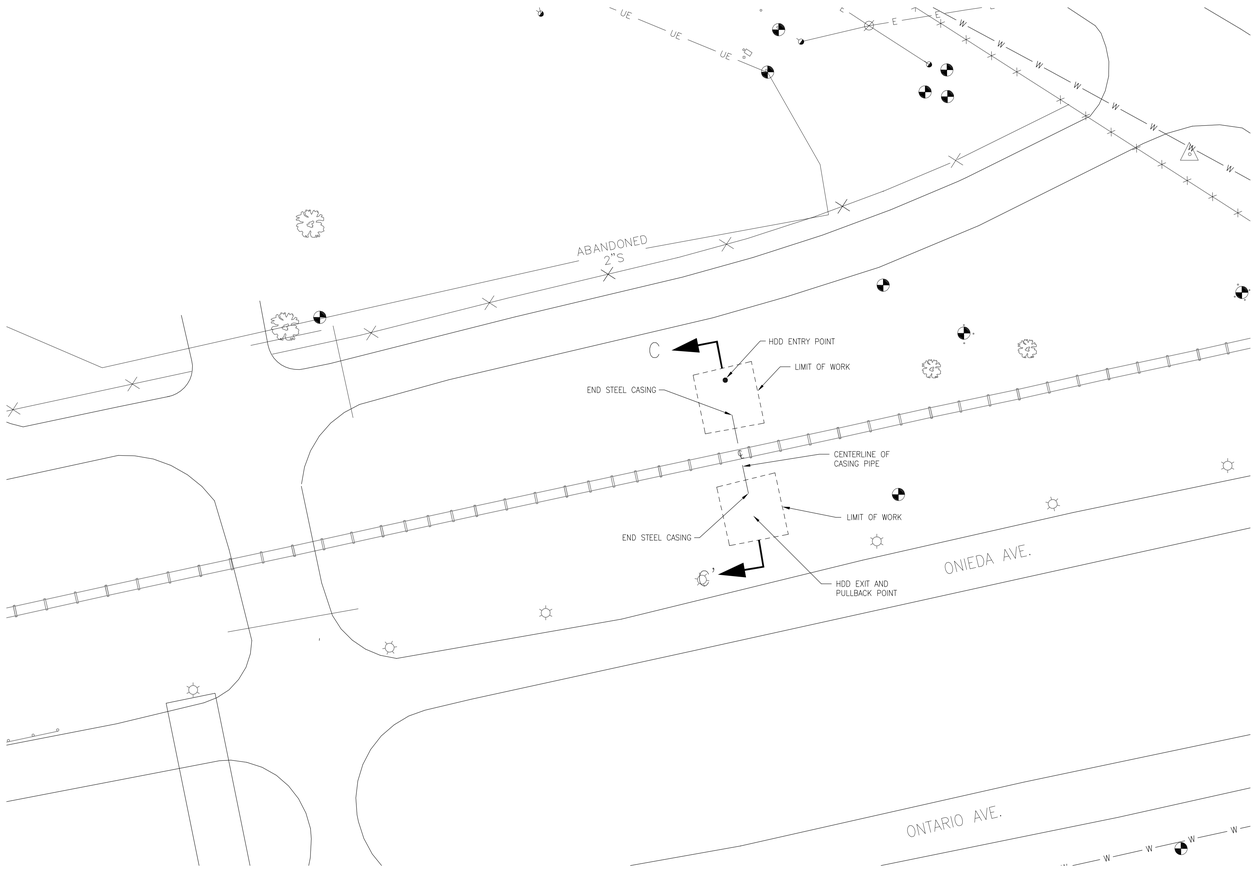


PLAN VIEW

SCALE: 1" = 30'

NOTES:

1. SYRACUSE UTILITIES, INC. PERFORMED ALL DRILLING AND CASING PIPE INSTALLATION.
2. ALL UNDERGROUND UTILITIES WERE FIELD VERIFIED BY HAND EXCAVATION PRIOR TO EXCAVATION OR DRILLING BY SYRACUSE UTILITIES INC.
3. CASING PIPE WAS INSTALLED USING HORIZONTAL DIRECTIONAL DRILLING METHODS. DRILLING WAS COMPLETED AT GROUND SERVICE OUTSIDE OF THE RAILROAD RIGHT-OF-WAY.
4. DIAMETER OF DRILLING DID NOT EXCEED DIAMETER OF THE CASING PIPE BY MORE THAN THREE INCHES.
5. ONE 8-INCH DIAMETER STEEL CASING PIPE WAS INSTALLED HORIZONTALLY UNDER RAILROAD TRACK SURFACE, PIPE WAS APPROXIMATELY 40-FEET LONG. CASING PIPE IS ASTM A-139 GRADE B OR EQUIVALENT WITH STRENGTH OF 35,000 PSI.
6. THE CROWN OF THE CASING PIPE WAS INSTALLED 10-FEET BELOW THE RAILROAD TRACK.
7. FINAL CASING PIPE ELEVATION WAS DETERMINED BASED ON LOCATION OF EXISTING UTILITIES AND SEPARATION REQUIREMENTS. (ALL UTILITY AGENCIES REQUIRED A MINIMUM OF 12" OF SEPARATION)
8. ALL WORK WAS COMPLETED OUTSIDE OF THE RAILROAD RIGHT-OF-WAY AND DID NOT INTERRUPT TRAFFIC.
9. UTILITY WAS INSTALLED IN THE CASING PIPE. THE 8-INCH DIAMETER STEEL CASING PIPE CONTAINS A 4-INCH DIAMETER HDPE SVE HEADER.
10. BASE DRAWING SOURCE: "TOPOGRAPHIC MAP OF A PORTION OF AREA 3805 AND AREA 1995 FOR CAPE ENVIRONMENTAL MANAGEMENT, NYS. ROUTE 26 AND ONIEDA AVE." DECEMBER 17, 2002 BY GYMO ARCHITECTURE ENGINEERING LAND SURVEYING P.C.

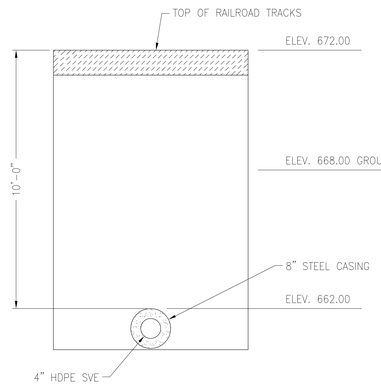


RAILROAD TRACK BORING

NOT TO SCALE

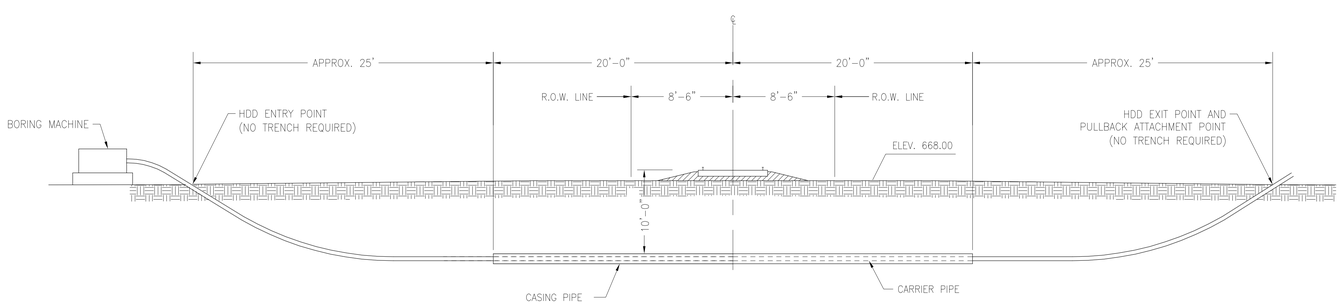


CROSS SECTION C-C'

SCALE: 1" = 5'

FINAL AS-BUILT

US Army Corps of Engineers

U.S. ARMY ENGINEER DISTRICT, BALTIMORE
CORPS OF ENGINEERS
BALTIMORE, MARYLAND

SOURCE AREA REMEDIAL SYSTEM
GASOLINE ALLEY AREAS 3805 & 1995
FORT DRUM, NEW YORK

AREA 1995
RAILROAD TRACK CROSSING

EA ENGINEERING, P.C.

| DRAWING NUMBER | PLATE |
|---|---|
| N/A | C-5B |

SCALE: AS NOTED | DATE: SEPT. 2004 | SHEET 5B

FILE: Syracuse_Sp/Syracuse/Working Projects\Fort Drum Projects\MARC\Design\drawings from location\final design drawings\C-5.dwg [Layout1]