FINAL REMEDIATION REPORT

WATER DISTRIBUTION SYSTEM

LEHIGH VALLEY RAILROAD DERAILMENT SITE

NYSDEC SITE NO. 8-19-014

CONTRACT NO. 0004327

Prepared for

NEW YORK STATE DEPARTMENT OF ENVIRONMENTAL CONSERVATION

Prepared by

STEARNS & WHELER, LLC
Environmental Engineers and Scientists
One Remington Park Drive
Cazenovia, New York 13035

RECEIVED
AUG 27 2003

August 2003

Project No. 1020960

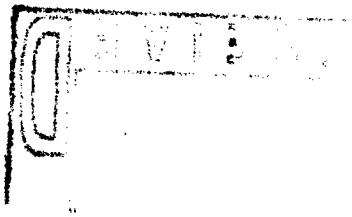

TABLE OF CONTENTS

	Page
SECTION 1 - PROJECT BACKGROUND	1
SECTION 2- WATER MAIN BACKGROUND	2
SECTION 3 - CONSTRUCTION	2
3.1 Genesee County	3
3.2 Livingston County	3
3.3 Monroe County	4
SECTION 4 - CONSTRUCTION ATTACHMENTS	4

LIST OF ATTACHMENTS:

Shop Drawings
Backflow Preventor Reports
Change Orders
Test Reports
Individual Services
Operation and Maintenance Manual
Certificate of Substantial Completion

FINAL REMEDIATION REPORT
WATER DISTRIBUTION SYSTEM
LEHIGH VALLEY RAILROAD DERAILMENT SITE
NYSDEC SITE NO. 8-19-014
CONTRACT NO. 0004327

SECTION 1 – PROJECT BACKGROUND

In 1970, a Lehigh Valley Railroad train derailed along Gulf Road in the Town of LeRoy spilling 30,000 gallons of TCE onto the ground. None of it was recovered. In early 1971, acting on residents' complaints of TCE odors in homes and reported contamination of nearby drinking water wells, the Lehigh Valley railroad conducted limited cleanup activities at the spill site. Carbon filters were installed to remove TCE from the drinking water on several local private wells. The railroad company also constructed ditches in the area of the TCE spill, which were flooded with water in an attempt to flush the TCE out of the ground. These are the only known cleanup activities conducted at the time of the spill, and it was not until further studies were conducted in early 1990 that the full extent of the contaminated wells was discovered.

In 1990 and 1991, in response to another inactive hazardous waste disposal site, NYSDOH sampled private water supplies east of the spill site and discovered TCE contamination in more than 35 private wells. Acting on this information, the USEPA installed carbon filtration units on all private wells that were found to be contaminated with TCE above the NYSDOH drinking water standard of 5.0 parts per billion (ppb). These carbon treatment units removed TCE from the water so that it can be used safely for drinking, bathing, and other domestic purposes.

In 1991, the NYSDEC and NYSDOH listed the site on the New York State Registry of Inactive Hazardous Waste Disposal Sites as a "Class 2 site," indicating that it poses a significant threat to the environment and/or public health and that remedial actions are required. A remedial investigation/feasibility study (RI/FS) was performed to characterize the nature and extent of contamination. In addition, an Operation and Maintenance (O&M) program was initiated to protect public health by maintaining the carbon filter units that the USEPA installed. NYSDEC, using money from the State Superfund, contracted the engineering services of Rust Environment and Infrastructure to conduct the RI/FS and the O&M program.

In 1992, the Remedial Investigation (RI) began and was designed to evaluate the nature and extent of the contamination caused by the TCE spill. The feasibility study (FS) began in 1993 while the RI was under way. Based upon the results of the RI/FS for the Lehigh Valley Railroad derailment site and the criteria identified for evaluation of alternatives, NYSDEC has selected soil and bedrock vapor extraction as a source control measure and a water main extension to provide a safe potable water supply to all impacted residents. This report details the construction of the water main extension.

SECTION 2 – WATER MAIN BACKGROUND

Stearns & Wheler, LLC was hired as a subconsultant by Shaw Environmental & Infrastructure, Inc. (formerly IT Engineering) to design and construct a water distribution system for the Lehigh Valley Railroad derailment site. The design was started in 1998, and upon completion, consisted of:

- 15 miles of 8-inch and 12-inch water main
- 1,000 feet of bored road and railroad crossings
- 30,000 cubic yards of rock removal
- 70 service connections
- pressure reducing and meter vaults
- 12 backflow preventers for both interior and exterior installations

The water was supplied by the Monroe County Water Authority (MCWA) via a connection in the Town of LeRoy. The entire system crossed through three counties (Monroe, Livingston, and Genesee) and four towns/village (Town of Wheatland, Town of Caledonia, Town of LeRoy, and Village of Caledonia).

SECTION 3 – CONSTRUCTION

The project was bid in August of 2001 and awarded to the low bidder, Milherst Construction, Inc. Notice to Proceed was given on December 21, 2001. Mainline pipe and water services were installed and the project was substantially completed on February 24, 2003. Final restoration and punchlist items were completed on July 18, 2003.

Listed below are the counties, towns, and streets where water main was installed.

3.1 GENESEE COUNTY

A. Town of LeRoy.

1. **North Street.** 12-inch ductile iron pipe was tied into the Town's existing 8- and 12-inch water main.

2. **Old Lehigh Valley Railroad Bed.** 12-inch ductile iron pipe was installed from North Street to Circular Hill Road.

3. **Circular Hill Road.** 12-inch ductile iron pipe was installed from the old Lehigh Valley Railroad bed to Route 5.

4. **Route 5.** Tied into the Town's existing 8-inch water main near House #8171 and a pressure reducing valve vault was installed. 12-inch ductile iron pipe was installed to the Town/County line.

5. **Church Road.** 12-inch ductile iron pipe was installed from Route 5 to Gulf Road.

6. **Gulf Road.** 8-inch ductile iron pipe was installed from House #8339 to the Town/County line.

3.2 LIVINGSTON COUNTY

A. Town of Caledonia.

1. **Route 5.** 12-inch ductile iron pipe was installed from Town/County line to the Village of Caledonia.

2. **Flint Hill Road.** 8-inch ductile iron pipe was installed from Route 5 to the Town of Wheatland/County line.

B. **Village of Caledonia.**

1. **Route 5.** 12-inch ductile iron pipe was installed from the Town of Caledonia to Spring Street.

2. **Spring Street.** 8-inch ductile iron pipe was installed from Route 5 to the Town of Wheatland.

3.3 MONROE COUNTY

A. **Town of Wheatland.**

1. **Flint Hill Road.** 8-inch ductile iron pipe was installed from the Town/County line, through the Genesee Country Museum, and George Street to Spring Street. This line also included a pressure reducing valve vault that tied into the existing MCWA's 6-inch water main on George Street.

2. **Spring Street.** 8-inch ductile iron pipe was installed from George Street to the Town of Caledonia.

3. **Lime Rock Road.** 8-inch ductile iron pipe was installed from the Town of Caledonia to Flint Hill Road. See Figure A for a detailed map of the pipe installation.

SECTION 4 – CONSTRUCTION ATTACHMENTS

Also included in this report are the following:

1. Shop Drawings – Copies of Shop Drawing Nos. 1 through 57, including all revisions.

2. Backflow Preventer Reports – Copies of each report and NYSDOH approval (14 included).

3. Test Reports – Copies of water main pressure and disinfection tests (including NYSDOH approvals) and concrete thrust block tests.

4. Change Orders – Signed copies of Change Order Nos. 1, 2, and 3.

5. Individual Services Table and Sheets – Detailed breakdown of each residential hook-up.

6. Operation and Maintenance Manual – Manuals for pressure reducing valves and backflow preventers.

7. Certificate of Substantial Completion.

SECTION 5 - CONSTRUCTION CERTIFICATION

Work has been completed in substantial conformance with the approved Contract Documents entitled:

Lehigh Valley Railroad Derailment Site
NYSDEC Site Number 8-19-014
Contract No. D004327
Town of LeRay, Genesee County, NY
Dated July 2001
Record Drawings – October 2003

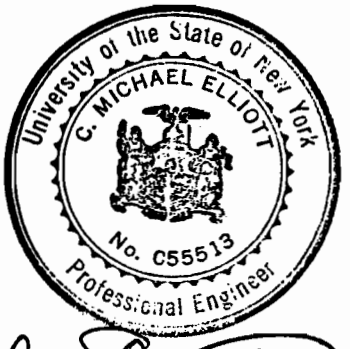

Engineer's Seal and Signature: _____

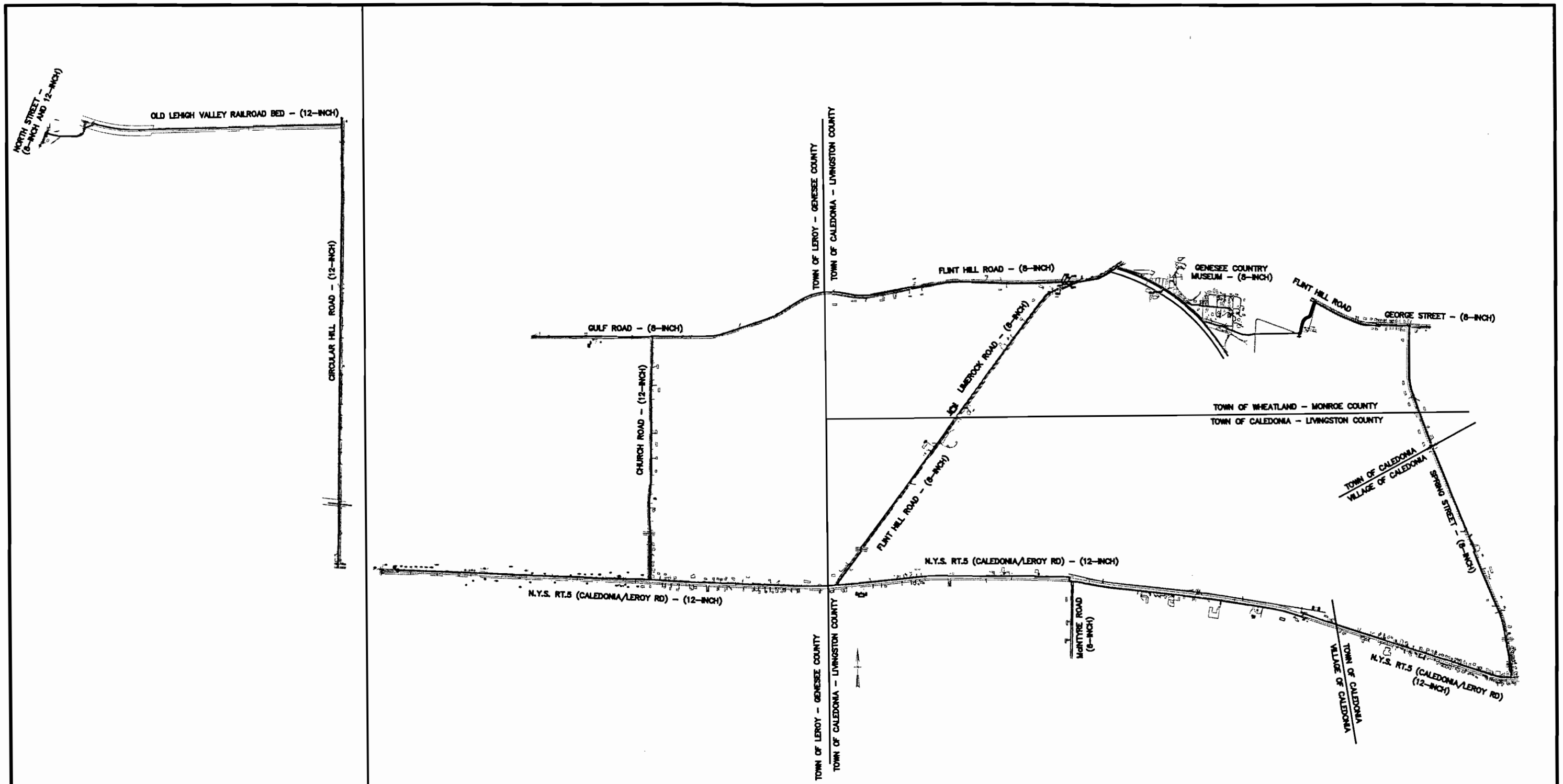

PLAN: 1" = 2000'

Stearns & Wheler, LLC
Environmental Engineers and Scientists
CAZENOVIA, NEW YORK

DATE:8/03 JOB No.:10209

N.Y.S. DEPARTMENT OF ENVIORNMENTAL CONSERVATION
LEHIGH VALLEY RAILROAD DERAILMENT SITE
WATER DISTRIBUTION SYSTEM

FIGURE A

CAZ CJY 8/03

M:\10209\RECC...WG\GEN\70318g01.dwg, 08/22/2003 09:22:56 AM, cjy, CAZ_IR2800-CANON.pc3, ... Cazenovia office

SHOP DRAWING LOG

Job Name LeHigh Valley Derailment Site
Job # 10209.50.5200
Contract No. D004327
Contractor Milherst Construction, Inc.

A Approved
AAC Approved as Corrected
AACR Approved as Corrected w/ resubmittal required
RR Revise & Resubmit
NA Not Approved
NR Not Reviewed

Subm. No.	Spec. Sect.	Title	Manufacturer	Perf. Aff.		Date Received	Date Returned	Review Duration	Action	Route
				req'd	rec'd					
1	02230	Type 1 Backfill	Dolomite Products Company	n		12/21/2001	1/7/2002	17	A	TJF
2	02510	Asphalt Concrete	RAM	n		12/21/2001	1/7/2002	17	A	TJF
3	02230	Type 4 Backfill	Dolomite Products Company	n		12/21/2001	1/7/2002	17	A	TJF
4	02230	Type 4 Backfill	Dolomite Products Company	n		12/21/2001	1/7/2002	17	A	TJF
5	02230	Type 4 Backfill	Dolomite Products Company	n		12/21/2001	1/7/2002	17	A	TJF
6	02230	Type 4 Backfill	Valley Sand and Gravel	n		12/21/2001	1/7/2002	17	A	TJF
7	02670	Casing Pipe	Ken Miller Supply	n		12/21/2001	1/7/2002	17	AAC	TJF
8	02670	Casing Spacers	Cascade	n		12/21/2001	1/7/2002	17	A	TJF
9	02610	Ductile Iron Pipe	Griffin Pipe Products	n		12/21/2001	1/7/2002	17	A	TJF
10	02610	Ductile Iron Pipe Restaint Joint	Griffin Pipe Products	n		12/21/2001	1/7/2002	17	AAC	TJF
11	02660	Gate Valve	US Pipe	n		12/21/2001	1/7/2002	17	A	TJF
12	02660	Valve Box	Bibby	n		12/21/2001	1/7/2002	17	RR	TJF
12A	02660	Valve Box	Bibby	n		1/22/2002	1/28/2002	6	AAC	JRP
13	02655	Fire Hydrant	US Pipe	n		12/21/2001	1/7/2002	17	A	TJF
14	02610	Ductile Iron Fittings	Tyler Pipe	n		12/21/2001	1/7/2002	17	NA	TJF
14A	02610	Ductile Iron Fittings	Tyler Pipe	n		1/22/2002	1/28/2002	6	A	JRP
15	02610	Options Letter	MJ Supply	n		12/21/2001	1/7/2002	17	AAC	TJF
16	02650	Tapping Sleeve	Cascade	n		12/21/2001	1/7/2002	17	AAC	TJF
17	02630	Service Saddles	McDonald Mfg	n		12/21/2001	1/7/2002	17	A	TJF
18	02630	1 "Corporation Stops	McDonald Mfg	n		12/21/2001	1/7/2002	17	A	TJF
19	02630	2" Corporation Stops	McDonald Mfg	n		12/21/2001	1/7/2002	17	RR	TJF
19A	02630	2" Corporation Stops	McDonald Mfg	n		1/22/2002	1/28/2002	6	A	JRP
20	02630	Copper Tubing	LeRan	n		12/21/2001	1/7/2002	17	A	TJF
21	02630	Service Coupling	McDonald Mfg	n		12/21/2001	1/7/2002	17	A	TJF
22	02630	Curb Stop	McDonald Mfg	n		12/21/2001	1/7/2002	17	A	TJF
23	02630	Curb Box	McDonald Mfg	n		12/21/2001	1/7/2002	17	A	TJF
24	02670	Type 5 Select Fill	Northrup Materials	n		12/21/2001	1/7/2002	17	A	TJF
25	02700	Concrete	QuikCrete	n		12/21/2001	1/7/2002	17	AAC	TJF
26	02510	Tackcoat	Rochester Road Materials	n		12/21/2001	1/7/2002	17	NA	TJF
26A	02510	Tackcoat	Rochester Road Materials	n		1/22/2002	1/28/2002	6	A	JRP
27	01564	Silt Fence	Indian Valley Industries	n		12/21/2001	1/7/2002	17	A	TJF
28	G-9	Volclay Waterstoppage	CETCO	n		12/21/2001	1/7/2002	17	A	TJF
29	G28	Frame and Cover for PR Pits	Syracuse Castings	n		1/25/2002	2/5/2002	11	RR	TJF
29A	G28	Frame and Cover for PR Pits	Syracuse Castings	n		3/4/2002	3/18/2002	14	A	TJF
30	02227	Procedure for Trench Backfill	Millherst	n		1/28/2002	2/5/2002	8	RR	TJF

SHOP DRAWING LOG

Job Name LeHigh Valley Derailment Site
Job # 10209.50.5200
Contract No. D004327
Contractor Milherst Construction, Inc.

A Approved
AAC Approved as Corrected
AACR Approved as Corrected w/ resubmittal required
RR Revise & Resubmit
NA Not Approved
NR Not Reviewed

30A	02227	Procedure for Trench Backfill	Millherst	n		2/12/2002	2/25/2002	13	RR	TJF
30B	02227	Procedure for Trench Backfill	Millherst	n		3/4/2002	3/18/2002	14	A	TJF
31	G-31	Manhole for 1.5-inch Service Meter	Kistner	n		2/12/2002	2/25/2002	13	A	TJF
32	G-29	Watermain Insulation Detail	Pittsburgh Corning	n		2/20/2002	2/25/2002	5	RR	TJF
32A	G-29	Watermain Insulation Detail	Pittsburgh Corning	n		3/4/2002	3/18/2002	14	A	TJF
33	02670	Flowable Fill	Grace	n		2/20/2002	2/25/2002	5	A	TJF
34	03482	Precast Concrete Vaults	Kistner	n		2/26/2002	3/18/2002	20	A	MEL
35	03482	Ladder System	Bilco	n		3/18/2002	3/18/2002	0	A	TJF
36	15060	Restrained Flanged Adapters	EBAA	n		4/5/2002	4/16/2002	11	NA	TJF
36A	15060	Transition Flanged Adapters	Powerseal	n		5/3/2002	5/6/2002	3	AAC	TJF
37	15060	DI Flanged Fittings	Tyler Pipe	n		4/5/2002	4/16/2002	11	A	TJF
38	15060	Flanged Pipe	FAST	n		4/5/2002	4/16/2002	11	A	TJF
39	15100	Pressure Reducing Valves	Ross	n		4/5/2002	4/16/2002	11	AAC	TJF
40	15100	Pressure Reducing Valves	Ross	n		4/5/2002	4/16/2002	11	AAC	TJF
41	11393	Backflow preventers	Febco	n		4/5/2002	4/16/2002	11	AAC	TJF
42	11393	Backflow preventers	Febco	n		4/5/2002	4/16/2002	11	AAC	TJF
43	11393	Hot Box	Safe-T-Cover	n		4/5/2002	4/16/2002	11	AAC	TJF
44	15060	Interior Piping	Muellar	n		5/22/2002	5/24/2002	2	A	TJF
45	02610	Polyethylene Encasement	Repcor	n		5/22/2002	5/24/2002	2	A	TJF
46	11393	Indvidual Meter Pits	Muellar	n		5/22/2002	5/24/2002	2	AAC	TJF
47	11393	PRV's	Ross	n		5/22/2002	5/24/2002	2	A	TJF
48	11393	Double Check Valve	Febco	n		5/22/2002	5/24/2002	2	AAC	TJF
49	11393	Inline Dual Check Valves	McDonald Mfg	n		5/22/2002	5/24/2002	2	A	TJF
50	11393	Ball Valves	ProFlo	n		5/22/2002	5/24/2002	2	A	TJF
51	02610	Viton Gaskets	DIPRA	n		6/3/2002	6/5/2002	2	A	TJF
52	02530	Concrete Mix	Northrup Materials	n		6/3/2002	6/5/2002	2	A	TJF
53	02980	Seed Mix- Uncultivated Areas		n		8/8/2002	8/12/2002	4	A	TJF
54	02980	Seed Mix- Lawn Areas	Lesco	n		8/8/2002	8/12/2002	4	A	TJF
55	02980	Topsoil	on-site stock pile	n		8/8/2002	8/12/2002	4	A	TJF
56	02980	Fertilizer		n		8/8/2002	8/12/2002	4	A	TJF
57	C.O.#1	Expansion Tanks	Amtrol	n		9/20/2002	9/23/2002	3	A	TJF

Milherst Construction, Inc.
P.O. Box 631
Getzville, New York 14068

Phone (716) 688-9098
Fax (716) 688-9562

Submittal No. 1

Lehigh Valley RR Derailment Site

Owner NYS Department of Environmental Conservation
Bureau of Construction Services, 12th Floor
625 Broadway
Albany, NY 12233-7013

Contractor Milherst Construction, Inc
Date 12/18/01

Item: type I backfill

Specification:

Section: 02230
Page No.: 02230-1
Para. No.: 2.01
Drawing No.: N/A
Location: N/A

I hereby certify that review, verification of products required, field dimentions, adjacent construction work and coordination of information, is in compliance with the requirements of the work and contract documents.

Approved By: Charles F. Kubmic

☒ APPROVED

☐ APPROVED AS CORRECTED
(Resubmit final copy for file)

☐ REVISE AND RESUBMIT BEFORE PROCEEDING

☐ NOT APPROVED

Review only for conformance with the design concept of the project and with information given in the Contract Documents. The Contractor is responsible for: verifying that dimensions are confirmed and correlated at the job site; obtaining information that pertains to the fabrication processes or to techniques of construction, and: coordinating the work of all subcontractors.
STEARNS & WHELER, LLC Engineers and Scientists

By TJF Date 12/28/01

DOLOMITE PRODUCTS COMPANY, INC.
1150 PENFIELD ROAD
ROCHESTER, N.Y. 14625

November 19, 2001

Milherst Construction, Inc.
2601 Millersport Highway
PO Box 631
Getzville, New York 14068

Attn: Mr. Jim Collins

Re: Material Certification: Lehigh Valley RR Derailment Watermain Project

Dear Mr. Collins:

Please be advised that the crushed stone to be used on the above referenced project will be produced at our LeRoy plant, Gulf Road location, in accordance with the New York State Department of Transportation's, "Standard Specifications", dated September 29, 2000. The state designated source number is 4-12R and the approved state test number is 00AR 44. All of the stone properties conform to sections 703.0201, 304 and 620 of the specifications. The typical values are listed below. Included also are the typical gradations of the stone sizes shown.

PROPERTY	VALUE	SPECIFICATION
Mag. Sulfate Loss	4	18 Max.
LA Abrasion Loss	20	35 Max.
Flat and Elongated		
Pieces 3:1	2	30 Max.
5:1	0	10 Max.
Crushed Particles	100	n.a.
Deleterious Materials	0	2 Max.

I trust that this information and certification will be sufficient, however, if you have any further questions regarding this matter, please do not hesitate to contact me.

SUBMITTAL
MILHERST CONSTRUCTION, INC.
Job: Contract D004327
Item: Type I Select Fill
Description: Crushed Lim Stone
Reviewed By: CFK
Date: 1/18/01

Respectfully,

DOLOMITE PRODUCTS COMPANY, INC.

Pasquale (Pat) A. DiLucia

Pasquale (Pat) A. DiLucia
Vice President - Sales

PAD/lam
Enclosure

Typical gradations of crushed stone; LeRoy plant. All values are percent passing.

SIEVE SIZE	ITEMS: 304.02 304.03 304.04 304.05 304.06 #2 CRUSHER RUN	#1 CRUSHER RUN	ITEM 605.0901 #1 STONE	#2 STONE	#1 & #2 MIXTURE
4" (100 mm)	100				
2" (50 mm)	100				
1 ½"(37.5 mm)	99			100	100
1" (25.0 mm)	89	100	100	98	99
1/2" (12.5 mm)		98	97	11	54
1/4" (6.3 mm)		50	9	2	6
No. 40 (425 µm)		9			
No. 200 (75 µm)		5.0	0.3	0.2	0.3

SUBMITTAL #1
[illegible] CONSTRUCTION, INC.
Job: Contract D004327
Item: Type 1 Select Fill
Descr: Crusher Run Stone
Reviewed By: CFK
Date: 12/18/01

Milherst Construction, Inc.
P.O. Box 631
Getzville, New York 14068

Phone (716) 688-9098
Fax (716) 688-9562

Submittal No. 1

Lehigh Valley RR Derailment Site

Owner NYS Department of Environmental Conservation
Bureau of Construction Services, 12th Floor
625 Broadway
Albany, NY 12233-7013

Contractor Milherst Construction, Inc
Date 12/18/01

Item: Asphalt Concrete

Specification:

Section:	02510	Base
Page No.:	02510-5	Binder
Para. No.:	2.01	
Drawing No.:	N/A	Top
Location:	N/A	

I hereby certify that review, verification of products required, field dimentions, adjacent construction work and coordination of information, is in compliance with the requirements of the work and contract documents.

Approved By: Charles T. Kubiniec

☒ **APPROVED**

☐ **APPROVED AS CORRECTED**
(Resubmit final copy for file)

☐ **REVISE AND RESUBMIT BEFORE PROCEEDING**

☐ **NOT APPROVED**

Review only for conformance with the design concept of the project and with information given in the Contract Documents. The Contractor is responsible for: verifying that dimensions are confirmed and correlated at the job site; obtaining information that pertains to the fabrication processes or to techniques of construction, and: coordinating the work of all subcontractors.
STEARNS & WHELER, LLC Engineers and Scientists

By TJF Date 12/28/01

ROCHESTER ASPHALT MATERIALS, INC.
1150 PENFIELD ROAD · ROCHESTER, NEW YORK 14625-2202 · TEL (716) 381-7010 · FAX (716) 381-0208

November 19, 2001

SUBMITTAL 2
MILHERST CONSTRUCTION, INC.
Job: D004327
Item: Asphalt Products
Descr: Base, Binder, Top
Reviewed By: CFK
Date: 12/18/01

Milherst Construction, Inc.
2601 Millersport Highway
PO Box 631
Getzville, New York 14068

Attn: Mr. Jim Collins

Re: Materials Certification: Lehigh Valley RR Derailment Watermain Project

Dear Mr. Collins:

I do hereby certify that the following asphalt mix(es):

403.11 - Type 1 Dense Base
403.13 - Type 3 Dense Binder
403.19 - Type 7F Marshall Top

will be produced for your above referenced project from our LeRoy location in accordance with the New York State Department of Transportation's "Standard Specifications", dated January 2, 1995, including all subsequent addenda.

I trust this certification will be sufficient, however, if you have any further questions regarding this matter, please do not hesitate to contact me.

Very truly yours,

ROCHESTER ASPHALT MATERIALS, INC.

Pasquale (Pat) A. DiLucia.

Pasquale (Pat) A. DiLucia
Vice President - Sales

PAD/lam
Enclosure(s)

NEW YORK STATE
PARTMENT OF TRANSPORTATION
MATERIALS BUREAU

JOB MIX FORMULA
Type 1 Dense Base

Aggregates	rce	%
No. 3A	12R	14
No. 2	4-12R	14
No. 1	4-12R	15
No. 1A	4-12R	12
Hotbin Fines	4-12R	45
	4-1F	
Mineral Filler		

JMF # : 010430311
Facility # : 10303
Region : 4

Producer : Rochester Asphalt Materials, Inc.
Plant Location : Leroy Batch

Submitted By : Moss Colombai Date : Mar-01

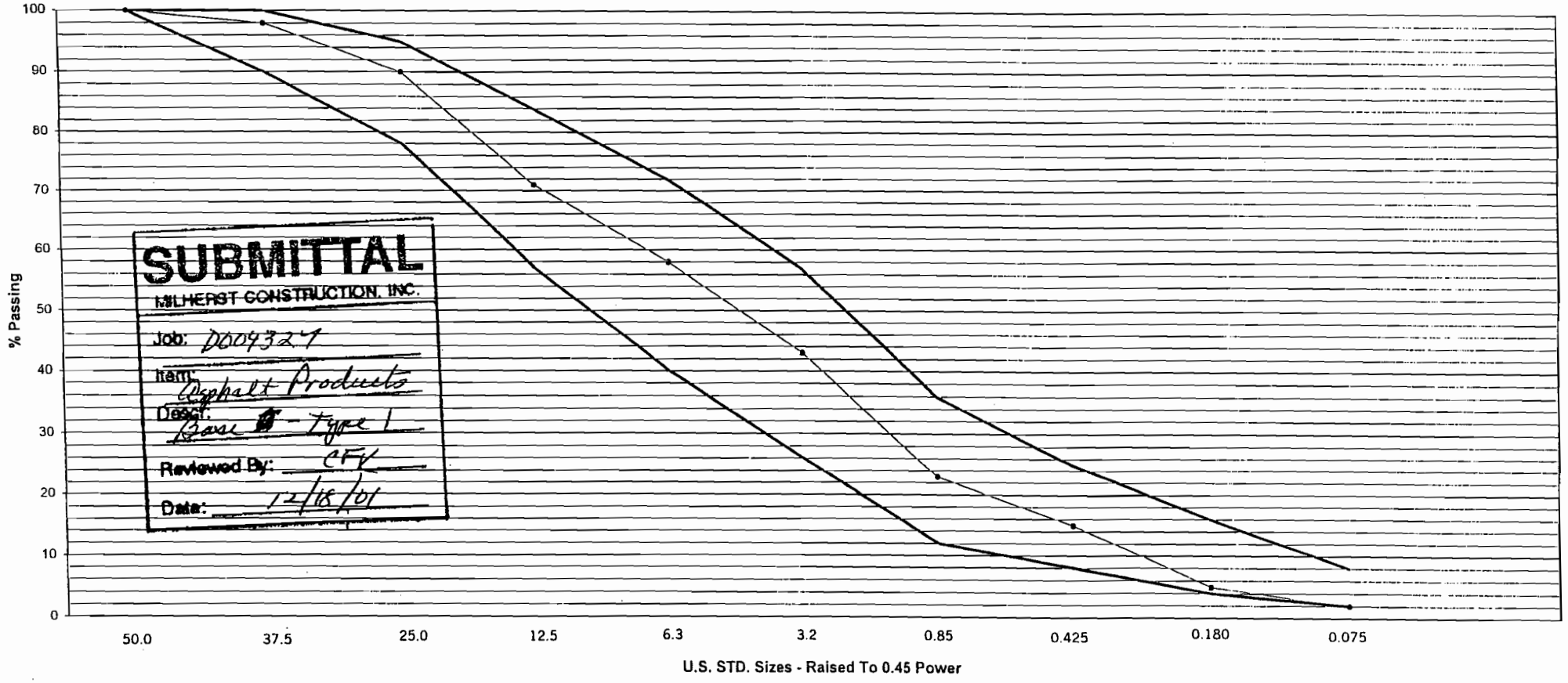

SUBMITTAL
MILHERST CONSTRUCTION, INC.
Job: D004327
Item: Asphalt Products
Desc: Base # - Type 1
Reviewed By: CFK
Date: 12/18/01

Sieve Size		50.0 mm	37.5 mm	25.0 mm	12.5 mm	6.3 mm	3.2 mm	850 µm	425 µm	180 µm	75 µm	Binder Content
% Passing	1. General Limits	100	90 - 100	78 - 95	57 - 84	40 - 72	26 - 57	12 - 36	8 - 25	4 - 16	2 - 8	4.0 - 6.0
	2. JMF Range	100	90 - 100	85 - 95	65 - 77	51 - 65	36 - 50	16 - 30	8 - 22	1 - 9	0 - 4	4 - 4.8
	3. Target Value	100	98	90	71	58	43	23	15	5	2	4.4

Binder Grade
PG 64-22 *

Reviewed By Regional Director Dave K Pratt Date: 4/4/01

Remarks: * - PG 58-28 may be substituted for road cuts and temporary work, as approved by RME.

NEW YORK STATE
DEPARTMENT OF TRANSPORTATION
MATERIALS BUREAU

JOB MIX FORMULA
Type 3 Dense Binder

Aggregates	Source	%
No. 3A		
No. 2	4-12R	20
No. 1	4-12R	20
No. 1A	4-12R	15
Hotbin Fines	4-12R 4-1F	45
Mineral Filler		

JMF # : - 010430313
Facility # : 10303
Region : 4

Producer : Rochester Asphalt Materials, Inc.
Plant Location : Leroy Batch

Submitted By : Moss Colombai Date : Mar-01

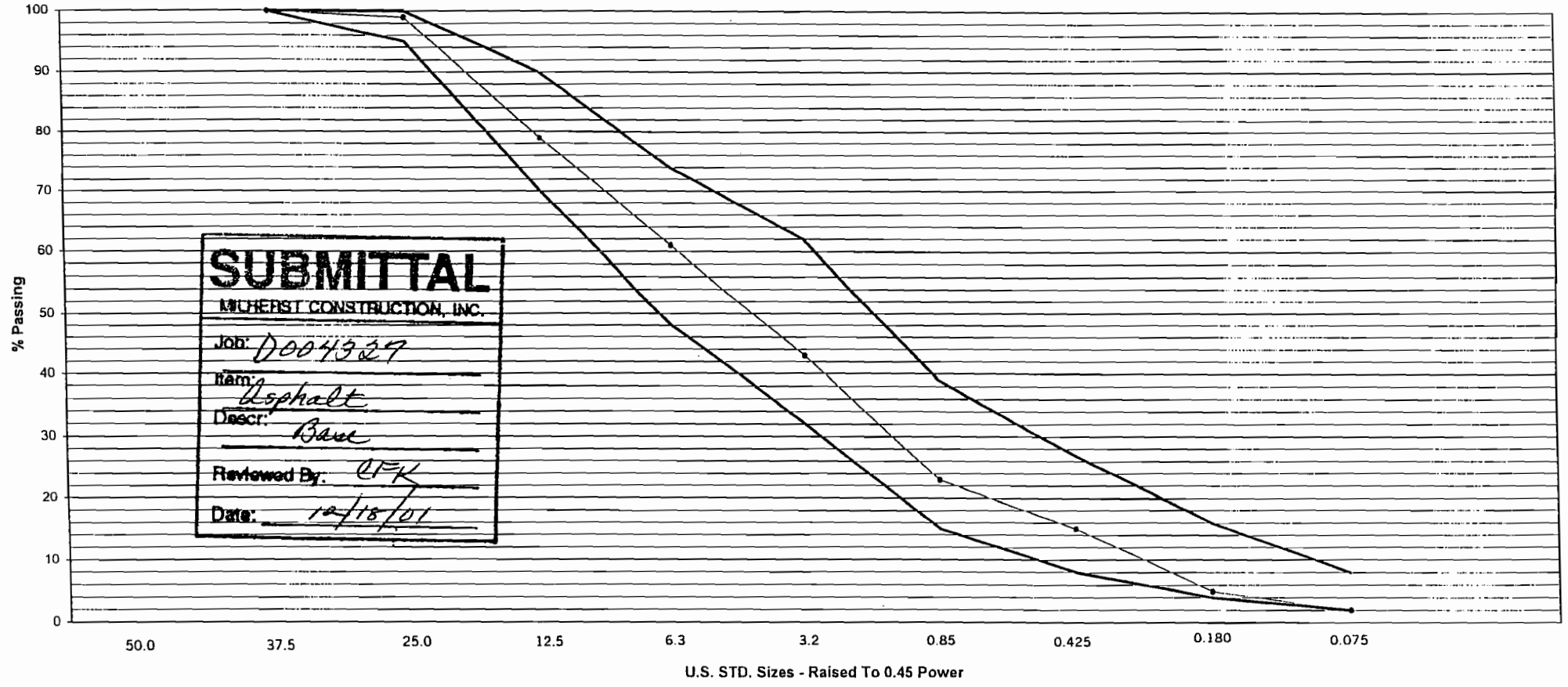

SUBMITTAL
MIDEAST CONSTRUCTION, INC.
Job: D004327
Item: Asphalt
Descr: Base
Reviewed By: CPK
Date: 10/18/01

Sieve Size		50.0 mm	37.5 mm	25.0 mm	12.5 mm	6.3 mm	3.2 mm	850 µm	425 µm	180 µm	75 µm	Binder Content
% Passing	1. General Limits		100	95 - 100	70 - 90	48 - 74	32 - 62	15 - 39	8 - 27	4 - 16	2 - 8	4.5 - 6.5
	2. JMF Range		100	95 - 100	73 - 85	54 - 68	36 - 50	16 - 30	8 - 22	1 - 9	0 - 4	4.5 - 5.3
	3. Target Value		100	99	79	61	43	23	15	5	2	4.9

Binder Grade
PG 64-22 *

Reviewed By Regional Director Dan O'Rourke Date: 4/4/01

Remarks: * - PG 58-28 may be substituted for road cuts and temporary work, as approved by RME.

NEW YORK STATE
DEPARTMENT OF TRANSPORTATION
MATERIALS BUREAU

JOB MIX FORMULA
Type 7 Top

Aggregates	Source	%
No. 3A		
No. 2		
No. 1		
No. 1A	4-12R	45
Hotbin Fines	4-12R	55
	4-1F	
Mineral Filler		

JMF # : 010430318
Facility # : 10303
Region : 4

Producer : Rochester Asphalt Materials, Inc.
Plant Location : Leroy Batch

Submitted By : Moss Colombai Date : Mar-01

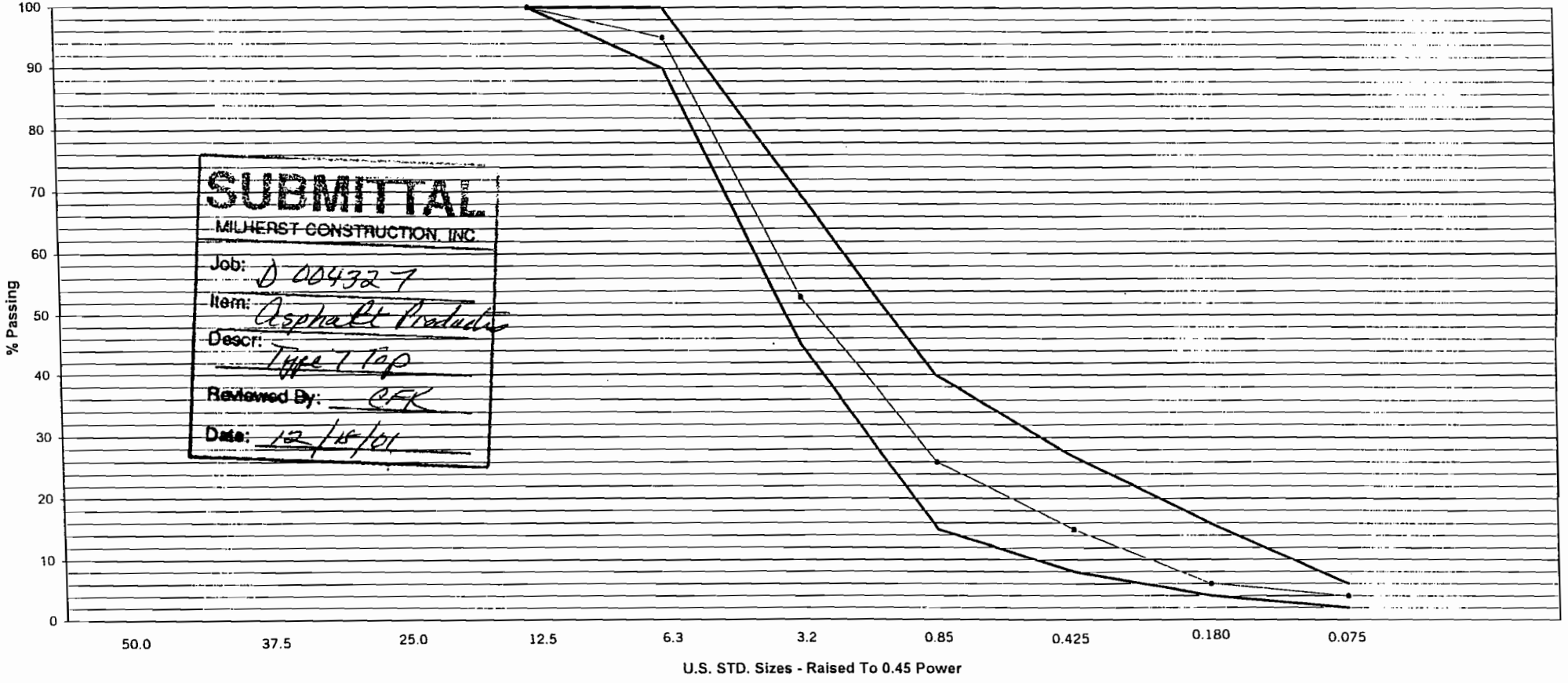

SUBMITTAL
MILHERST CONSTRUCTION, INC.
Job: D 004327
Item: Asphalt Products
Descr: Type 7 Top
Reviewed By: CFK
Date: 12/18/01

Sieve Size		50.0 mm	37.5 mm	25.0 mm	12.5 mm	6.3 mm	3.2 mm	850 µm	425 µm	180 µm	75 µm	Binder Content
% Passing	1. General Limits				100	90 - 100	45 - 70	15 - 40	8 - 27	4 - 16	2 - 6	6.0 - 8.0
	2. JMF Range				100	90 - 100	47 - 59	19 - 33	8 - 22	2 - 10	2 - 6	6 - 6.8
	3. Target Value				100	95	53	26	15	6	4	6.4

Binder Grade
PG 64-22 *

Reviewed by Regional Director David R Pratt Date: 4/4/01

Remarks: * - PG 58-28 may be substituted for road cuts and temporary work, as approved by RME.

Milherst Construction, Inc.
P.O. Box 631
Getzville, New York 14068

Phone (716) 688-9098
Fax (716) 688-9562

Submittal No. 3

Lehigh Valley RR Derailment Site

Owner NYS Department of Environmental Conservation
Bureau of Construction Services, 12th Floor
625 Broadway
Albany, NY 12233-7013

Contractor Milherst Construction, Inc
Date 12/18/01

Item: Type 4 Backfill

Specification:

Section: 02230
Page No.: 02230-1
Para. No.: 2.01
Drawing No.: N/A
Location: N/A

I hereby certify that review, verification of products required, field dimentions, adjacent construction work and coordination of information, is in compliance with the requirements of the work and contract documents.

Approved By: Charles T. Kubinec

☒ **APPROVED**
☐ **APPROVED AS CORRECTED**
(Resubmit final copy for file)

☐ **REVISE AND RESUBMIT BEFORE PROCEEDING**
☐ **NOT APPROVED**

Review only for conformance with the design concept of the project and with information given in the Contract Documents. The Contractor is responsible for: verifying that dimensions are confirmed and correlated at the job site; obtaining information that pertains to the fabrication processes or to techniques of construction, and: coordinating the work of all subcontractors.
STEARNS & WHELER, LLC Engineers and Scientists

By TJF Date 1/2/02

DOLOMITE PRODUCTS COMPANY, Inc.
MANITOU CONCRETE COMPANY, Inc.
NORTHRUP MATERIALS

THE DOLOMITE GROUP

ROCHESTER ASPHALT MATERIALS, Inc.
IROQUOIS ROCK PRODUCTS, Inc.
KEYSTONE BUILDERS SUPPLY

CONTRACTOR: Milherst Construction, Inc. ATTN: Jim Collins
PROJECT: Lehigh Valley RR Derailment Watermain DATE: November 20, 2001

SPEC. ITEM #: NYSDOT #: 703-06
MATERIAL TYPE: Cushion Sand
PLANT: Avon
SAMPLE #: Typical

SIEVE SIZE	% PASS	SPEC
1/4"	100	100
#50	4	0 - 35
#100	2	0 - 10

REMARKS:

This is a clean, hard, durable natural sand, free from clay and deleterious substances

SPEC. ITEM #: Type 4 Sand
MATERIAL TYPE: Cushion Sand
PLANT: Avon
SAMPLE #: Typical

SIEVE SIZE	% PASS	SPEC
3/8"	100	100
#4	94	90 - 100
#8	60	80 - 100
#16	27	50 - 85
#30	11	25 - 60
#50	4	10 - 30
#100	2	2 - 10

REMARKS:

This is the same sand listed above.

MILHERST CONSTRUCTION, INC.
Job: 0004327
Item: Type 4 Sand
Descr: Pipe bedding
Reviewed By: CFK
Date: 12/18/01

SPEC. ITEM #:
MATERIAL TYPE:
PLANT:
SAMPLE #:

SIEVE SIZE	% PASS	SPEC

REMARKS:

BY: Pasquale (Pat) A. DiLucia

Pasquale (Pat) A. DiLucia - Vice President

1150 PENFIELD ROAD ROCHESTER, N.Y. 14625 PHONE: (716) 381-7010 FAX: (716) 381-0208

Milherst Construction, Inc.
P.O. Box 631
Getzville, New York 14068

Phone (716) 688-9098
Fax (716) 688-9562

Submittal No. 4

Lehigh Valley RR Derailment Site

Owner NYS Department of Environmental Conservation
Bureau of Construction Services, 12th Floor
625 Broadway
Albany, NY 12233-7013

Contractor Milherst Construction, Inc
Date 12/18/01

Item: Type 4 Backfill

Specification:

Section: 02230
Page No.: 02230-1
Para. No.: 2.01
Drawing No.: N/A
Location: N/A

See variation in specification.

I hereby certify that review, verification of products required, field dimentions, adjacent construction work and coordination of information, is in compliance with the requirements of the work and contract documents.

Approved By: Charles T. Kubinec

☒ **APPROVED**
☐ **APPROVED AS CORRECTED**
(Resubmit final copy for file)
☐ **REVISE AND RESUBMIT BEFORE PROCEEDING**
☐ **NOT APPROVED**

Review only for conformance with the design concept of the project and with information given in the Contract Documents. The Contractor is responsible for: verifying that dimensions are confirmed and correlated at the job site; obtaining information that pertains to the fabrication processes or to techniques of construction, and: coordinating the work of all subcontractors.
STEARNS & WHELER, LLC Engineers and Scientists

By TSF Date 1/2/02

Quality Inspection Services, Inc.

Corporate Headquarters
Cathedral Park Tower
37 Franklin Street • Suite 400 • Buffalo, New York 14202
(716) 853-2611 • Fax (716) 853-2619
Visit Us At: www.qisi.com *E-Mail:* buffalo@qisi.com

PROJECT: Materials Testing
CLIENT: Frey Sand & Gravel
DATE: October 17, 2001
PROJECT NO.: BT-01-020
REPORT NO.: 1 - 1

****

REPORT OF MATERIALS TESTING

Material: A sample of Bank Run Sand was collected by Quality Inspection Services on October 16, 2001 from Frey Sand & Gravel - Alexander Pit. The sample was then tested in accordance to proper ASTM designations per Project Specifications.

Sieve Analysis of Fine and Coarse Aggregate - ASTM C 136-92

Sieve Size	Percent Passing	Spec's
0.5"	100.0	
.375" 3/8	98.8	100
#4	97.6	90 to 100
#8	96.2	80 to 100
#16	94.7	50 to 85
#30	91.4	25 to 60
#50	80.3	10 to 30
#80	61.1	
#100	52.1	2 - 10
#200	26.2	

SUBMITTAL
MILHEAST CONSTRUCTION, INC.
Job: 0004327
Item: Type 4 Select
Desc: Bedding Sand
Reviewed By: CFK
Date: 12/18/01

If you should have any questions regarding the data as presented, please feel free to contact our office at any time.

Respectfully Submitted,

James T. Handzlik
Operations Manager

186 Warwick Avenue
Buffalo, New York 14215
(716) 836-0131 • Fax (716) 836-9608

P.O. Box 597
Nyack, New York 10960
(914) 645-8468

1215 Vista Road
Pasadena, Texas 77504
(713) 378-5010 • Fax (713) 378-5001

Sustaining Member

6730 Myers Road
East Syracuse, New York 13057
(315) 431-4281 • Fax (315) 431-4292

318 North Morrison Street
Warren, Pennsylvania 16365
(814) 726-1988 • Fax (814) 728-7850

PMB #309, 4 State Road
Media, Pennsylvania 19063
(610) 746-7423

2659 Edison Avenue
Jacksonville, Florida 32204
(904) 387-5959 • Fax (904) 387-5812

For Job Satisfaction · Think Quality

Milherst Construction, Inc.
P.O. Box 631
Getzville, New York 14068

Phone (716) 688-9098
Fax (716) 688-9562

Submittal No. 5

Lehigh Valley RR Derailment Site

Owner NYS Department of Environmental Conservation
Bureau of Construction Services, 12th Floor
625 Broadway
Albany, NY 12233-7013

Contractor Milherst Construction, Inc
Date 12/18/01

Item: Type 4 Backfill

Specification:

Section: 02230
Page No.: 02230-1
Para. No.: 2.01
Drawing No.: N/A
Location: N/A

See variation in specifications

I hereby certify that review, verification of products required, field dimentions, adjacent construction work and coordination of information, is in compliance with the requirements of the work and contract documents.

Approved By: Charles T. Kubinec

☒ **APPROVED**

☐ **APPROVED AS CORRECTED**
(Resubmit final copy for file)

☐ **REVISE AND RESUBMIT BEFORE PROCEEDING**

☐ **NOT APPROVED**

Review only for conformance with the design concept of the project and with information given in the Contract Documents. The Contractor is responsible for: verifying that dimensions are confirmed and correlated at the job site; obtaining information that pertains to the fabrication processes or to techniques of construction. and: coordinating the work of all subcontractors.
STEARNS & WHELER, LLC Engineers and Scientists

By TJF Date 1/2/02

Particle Size Distribution Report

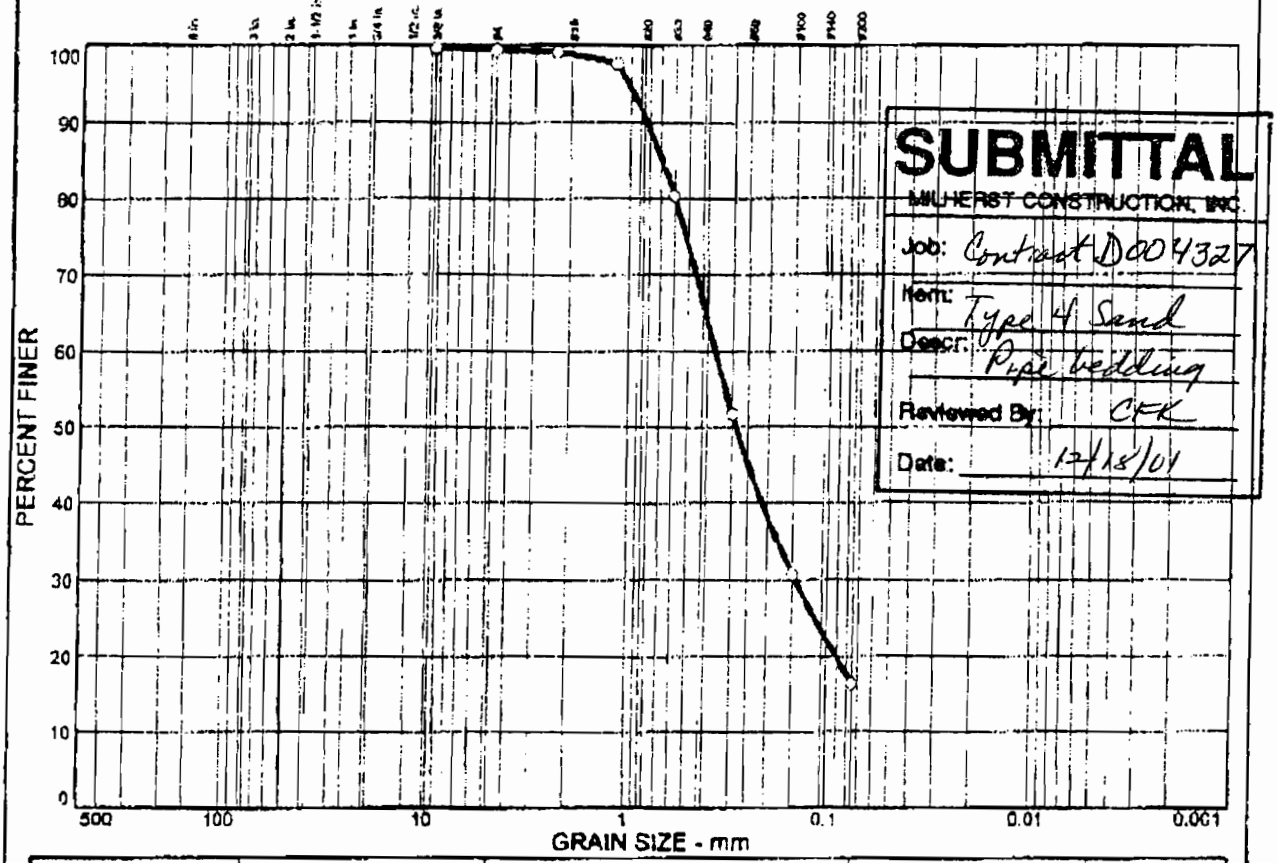

SUBMITTAL
MILLHERST CONSTRUCTION, INC.
Job: Contract D004327
Item: Type 4 Sand
Descr: Pipe bedding
Reviewed By: CFK
Date: 12/18/01

% COBBLES	% GRAVEL	% SAND	% SILT	% CLAY
		82.9	16.5	

SIEVE SIZE	PERCENT FINER	SPEC.* PERCENT	PASS? (X=NO)
.375 in.	99.6	100	
#4	99.4	90-100	
#8	99.1	20-100	
#16	97.2	50-85	X
#30	80.4	25-60	X
#50	51.8	10-30	X
#100	30.8	2-10	X
#200	16.5		

* (no specification provided)

Soil Description
SAND, little Fines

Atterberg Limits
PL= LL= PI=

Coefficients
D_{85}= 0.691 D_{60}= 0.366 D_{50}= 0.286
D_{30}= 0.145 D_{15}= D_{10}=
C_u= C_c=

Classification
USCS= AASHTO=

Remarks
Sample delivered to VanDerHorst on 9-25-01
F.M.=1.41

Sample No.: 01-1404 Source of Sample: Date: 9-28-01
Location: Elev./Depth:

VAN DER HORST ENGINEERING

Client: MacDuffie Sand & Gravel
Project: Materials Testing - MacDuffie Sand & Gravel
Project No: RCH-01-324 Figure Number 01-1404

Milherst Construction, Inc.
P.O. Box 631
Getzville, New York 14068

Phone (716) 688-9098
Fax (716) 688-9562

Submittal No. 6

Lehigh Valley RR Derailment Site

Owner NYS Department of Environmental Conservation
Bureau of Construction Services, 12th Floor
625 Broadway
Albany, NY 12233-7013

Contractor Milherst Construction, Inc
Date 12/18/01

Item: Type 4 Backfill

Specification:

Section: 02230
Page No.: 02230-1
Para. No.: 2.01 See variation in specification
Drawing No.: N/A
Location: N/A

I hereby certify that review, verification of products required, field dimentions, adjacent construction work and coordination of information, is in compliance with the requirements of the work and contract documents.

Approved By: Charles F. Kubinec

☒ **APPROVED**

☐ **APPROVED AS CORRECTED**
(Resubmit final copy for file)

☐ **REVISE AND RESUBMIT BEFORE PROCEEDING**

☐ **NOT APPROVED**

Review only for conformance with the design concept of the project and with information given in the Contract Documents. The Contractor is responsible for: verifying that dimensions are confirmed and correlated at the job site; obtaining information that pertains to the fabrication processes or to techniques of construction, and: coordinating the work of all subcontractors.
STEARNS & WHELER, LLC Engineers and Scientists

By TJF Date 1/9/02

AGGREGATE TESTS
PORTLAND CEMENT CONCRETE PLANT

FINE AGGREGATE TESTS

PLANT Valley Sand & Gravel		LOCATION Scottsville, NY	REGION
DATE 8-24-01	TIME OF SAMPLE 8:00 AM	CONCRETE CLASS Small Pea Gravel	TEST (✓) routine ( ) retest
INSPECTOR Bruce		CONTRACTS SERVED	

CHECK TEST(S) REPORTED ON THIS FORM		SAMPLE LOCATION
(✓) gradation	( ) minus No 200	( ) belt ( ) barge
(✓) fineness modulus	( ) moisture	(✓) stockpile ( ) other
( ) visual ident		( ) bin

GRADATION					FINENESS MODULUS		VISUAL IDENTIFICATION
SIEVE SIZE (mm)	CUM WT	% RETAINED	% PASSING	SPEC LIMITS	SIEVE	100-% PASS	Compares favorably to certified aggregate reference sample? YES NO
9.5	0	0	0	100	3/8"		
4.75	2691	69	31	90-100	#4		
2.36	3691	25.6	5.4	75-100	#8		
1.18	3786	2.4	3	50-85	#16		
0.6	3831	1.2	1.8	25-60	#30		If "No", explain.
[illegible]3	3851	.5	1.3	10-30	#50		
[illegible].15	3881	.8	1	1-10	#100		
0.075				0-3			
PAN							
TOTAL	3901	.8			TOTAL		
MOISTURE CONTENT					FM= total / 100	100%	FM (MIX DESIGN)

SUBMITTAL
MILHERST CONSTRUCTION, INC.
Job: D004327
Item: Type 4
Descr: Pipe Bedding
Reviewed By: CFK
Date: 12/18/01

COARSE AGGREGATE TESTS

PLANT Valley Sand & Gravel		LOCATION Scottsville, NY	REGION
DATE	TIME OF SAMPLE	CONCRETE CLASS	TEST ( ) routine ( ) retest
INSPECTOR		CONTRACTS SERVED	

GRADATION						VISUAL IDENTIFICATION
SIZE (mm)	CUM WT	% RETAINED	% PASSING	SPEC LIMITS	SIEVE	Compares favorably to certified aggregate reference sample? YES NO
38.1					1 1/2"	
25.4					1"	
19.05					3/4"	
[illegible]7					1/2"	
[illegible]2					3/8"	
6.35					1/4"	If "No", explain:
3.18					1/8"	
0.19					#80	
PAN					PAN	

Milherst Construction, Inc.
P.O. Box 631
Getzville, New York 14068

Phone (716) 688-9098
Fax (716) 688-9562

Submittal No. 7

Lehigh Valley RR Derailment Site

Owner NYS Department of Environmental Conservation
Bureau of Construction Services, 12th Floor
625 Broadway
Albany, NY 12233-7013

Contractor Milherst Construction, Inc
Date 12/18/01

Item: Casing Pipe

Specification:

Section: 02670
Page No.: 02670-2
Para. No.: 2.01
Drawing No.: 6-30
Location:

I hereby certify that review, verification of products required, field dimentions, adjacent construction work and coordination of information, is in compliance with the requirements of the work and contract documents.

Approved By: Charles T. Kubinec

☐ APPROVED
☒ APPROVED AS CORRECTED
~~(Resubmit final copy for file)~~
☐ REVISE AND RESUBMIT BEFORE PROCEEDING
☐ NOT APPROVED

Review only for conformance with the design concept of the project and with information given in the Contract Documents. The Contractor is responsible for: verifying that dimensions are confirmed and correlated at the job site; obtaining information that pertains to the fabrication processes or to techniques of construction, and: coordinating the work of all subcontractors.
STEARNS & WHELER, LLC Engineers and Scientists

By TJF Date 12/28/01

surface coating shall be bitumastic and meet requirem of paragraph 2.01, D.

KEN MILLER SUPPLY INC.
OIL and GAS WELL EQUIPMENT
STEEL and PLASTIC PIPE

JUNCTION CITY, OHIO (740) 987-5010
FALLSBURG, OHIO (740) 828-3385
MARIETTA, OHIO (740) 373-6306 (740) 373-6807
INDIANA, PENNSYLVANIA (724) 465-0875
WESTON, W. VA. (304) 269-3850
CLARKSBURG, W VA (304) 462-5776
CHARLESTON, W VA (304) 595-3105

11-26-01
(date)

To: CASE BORING
Attn: TONY

This is to certify that the 24" .375 CASING FOR THE LEHIGH JOB 20' LENGTHS COATED O.D./I.D. is new, meets or exceeds the yield and tensile requirements of ASTM A-53/A-139 GRADE B and carries a minimum yield strength of 35,000 PSI (no hydrostatic testing).

SUBMITTAL
MILHERST CONSTRUCTION, INC.
Job: Contract D004327
Item: Steel Pipe
Descr: Bore Casing
Reviewed By: CFK
Date: 12/18/01

Sincerely,
KEN MILLER SUPPLY

Kirk Miller
Sales Rep.

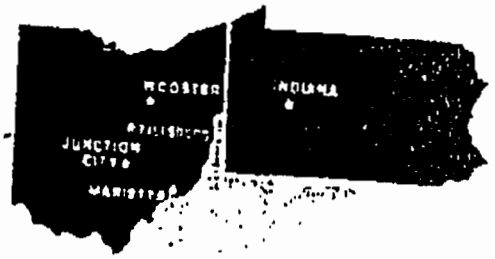

Milherst Construction, Inc.
P.O. Box 631
Getzville, New York 14068

Phone (716) 688-9098
Fax (716) 688-9562

Submittal No. 8

Lehigh Valley RR Derailment Site

Owner NYS Department of Environmental Conservation
Bureau of Construction Services, 12th Floor
625 Broadway
Albany, NY 12233-7013

Contractor Milherst Construction, Inc
Date 12/18/01

Item: Casing Spacer

Specification:

Section: 02670
Page No.: 02670-2
Para. No.: 2.01
Drawing No.: G-30
Location: Road Bores

I hereby certify that review, verification of products required, field dimentions, adjacent construction work and coordination of information, is in compliance with the requirements of the work and contract documents.

Approved By: Charles T. Kubinec

☒ APPROVED

☐ APPROVED AS CORRECTED
(Resubmit final copy for file)

☐ REVISE AND RESUBMIT BEFORE PROCEEDING

☐ NOT APPROVED

Review only for conformance with the design concept of the project and with information given in the Contract Documents. The Contractor is responsible for: verifying that dimensions are confirmed and correlated at the job site; obtaining information that pertains to the fabrication processes or to techniques of construction, and: coordinating the work of all subcontractors.
STEARNS & WHELER, LLC Engineers and Scientists

By TJF Date 12/28/01

ALL STAINLESS STEEL CASING SPACERS

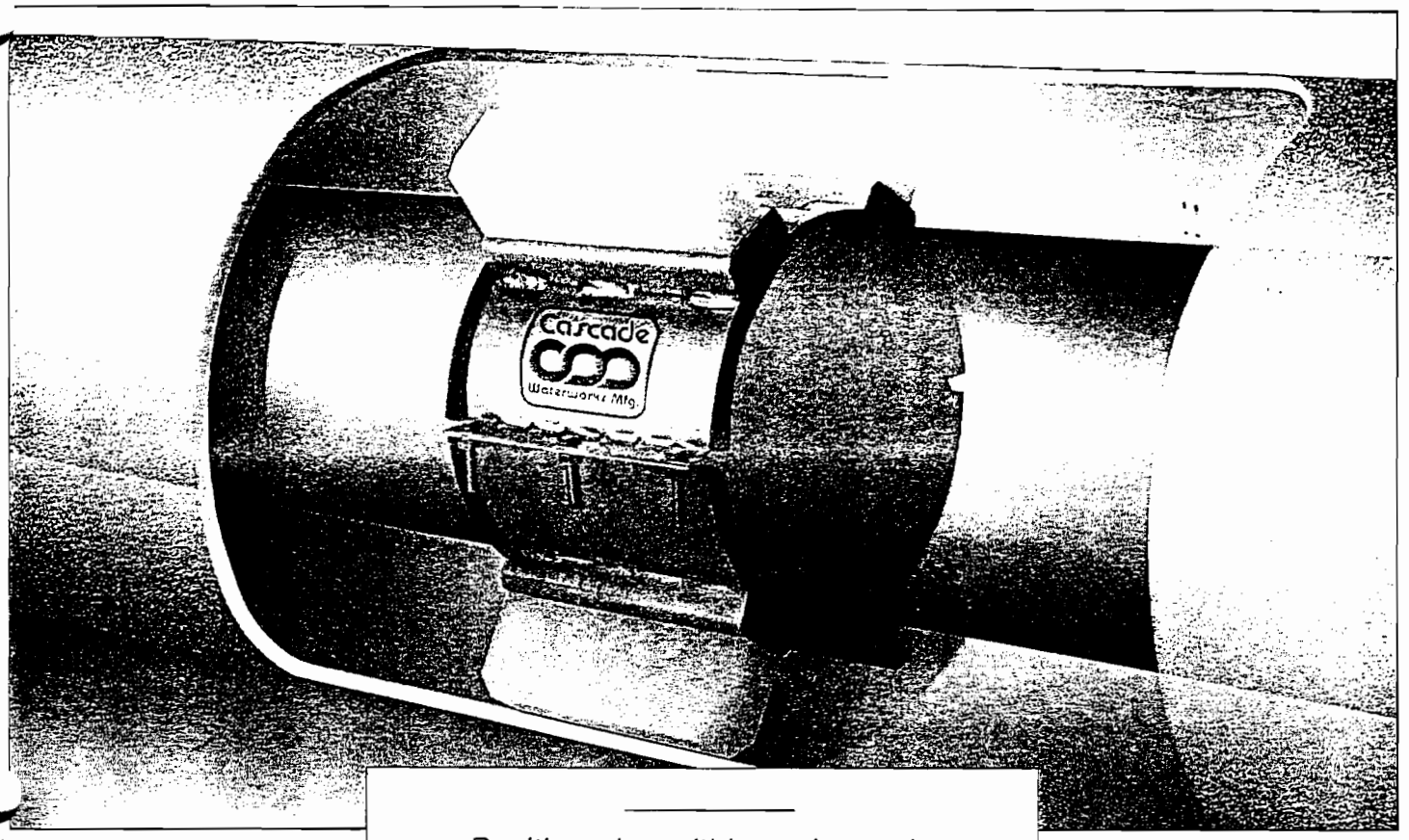

Position pipe within casing under roadways, railroads, bridges, and canals. Ideal for sliplining.

SUBMITTAL
MIDWEST CONSTRUCTION, INC.
Job: D 004327
Item: Casing Spacer &
Service: Carrier Pipe
Reviewed By: CFK
Date: 12/18/01

Cascade
Waterworks Mfg.

THE STANDARD OF EXCELLENCE IN THE INDUSTRY.

CASCADE WATERWORKS MANUFACTURING COMPANY
1213 Badger Street • Yorkville, Illinois 60560 • (630) 553-0840 • (800) 426-4301 Outside Illinois • Fax (630) 553-0181

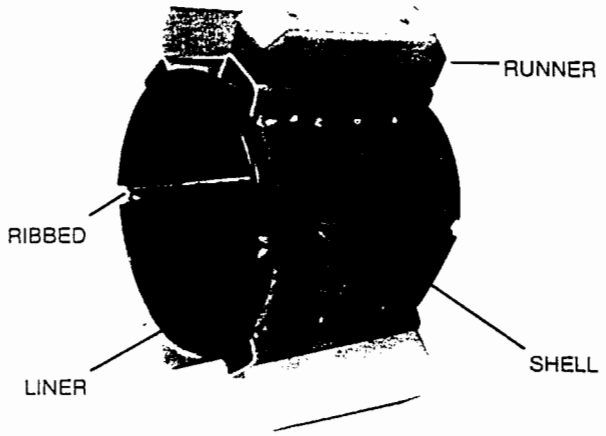

MATERIAL SPECIFICATIONS

SHELL – minimum 14 gauge T 304 stainless steel.
All surfaces are fully chemically passivated.
Flanges ribbed for strength.

RISERS – Minimum 10 ga. T 304 stainless steel, reinforced over 6" height.

FASTENERS – 5/16" T 304 stainless steel

LINER – PVC – .090 thick, 85-90 durometer
(ASTM D1706-61T) – 80
Max constant operating temperature – 150F (64C)
Electrical properties – (ASTM – D149-61)
1380 V/min.
Resistance –
Salt Spray (ASTM – B117) – Excellent
Acids – Good

RUNNERS – Ultra high molecular weight polymer
Low coefficient of friction
High resistance to abrasion and sliding wear
Toughness under impact
Low deflection under compression
Dielectric insulation

TYPICAL DATA — RUNNERS

PROPERTY	ASTM METHOD	UNITS	VALUE
Specific Gravity	D-792	gm/cc	.934
Tensile Strength (Break)	D-638	PSI	3500
Elongation (Break)	D-638	%	380
Izod Impact	D-256	Ft.lbs/" of notch	NO BREAK
Hardness	D-2240	Shore D	67
Coefficient of Friction	D-1894	-	.11 - .13
Heat Distortion Temp. 66PSI	D-648	C	88
Coefficient of Thermal Expansion	D-696	F°	5.5 x 10⁵
ELECTRICAL PROPERTIES			
Dielectric Constant	D-150	-	2.3
Dissipation Factor 60 cycles to 10 6 cycles	D-150	-	<0.5 x 10
Volume Resistivity @ 23 -c	D-257	ohm.cm	>10
Surface Resistivity	D-257	ohm	>10¹
Dielectric Strength	D-148	KV/CM	900
ABRASION CHARACTERISTICS			
Taber Abrasion	D-1044	Mg/loss	Nil
Sand Slurry*			7

*Sand Slurry condition - 7 hours in one part water at 1725 RPM.
Carbon Steel = 100.UHMW 1900 = 15. Lower value more resistant to abrasion.

CASCADE ALSO MAKES:

- All Stainless Steel Repair Clamps
- Ductile Couplings
- Ductile and Stainless Steel Service Saddles
- Fabricated Steel Tapping Sleeves
- Stainless Steel Tapping Sleeves
- Water and Sewer Specialty Products.

To Order, see page 5 and call
(800) 426-4301

CASEY CASCADE
BOLT 'EM ON—SLIDE IT IN

Inside Illinois
(630) 553-0840

WARRANTY

CASCADE warrants all products against defects in material or workmanship. CASCADE will replace any product found to be defective within one year from date of shipment from CASCADE'S factory, provided that the buyer delivers the claimed defective product freight prepaid to CASCADE'S factory for inspection. CASCADE is not liable or responsible for any loss, damage or injury to any person or property directly or indirectly arising from the use or inability to use the product. User shall determine the suitability of the product for its intended use before using. User assumes all risks in connection with the use of the product. No claims for labor of damage will be allowed. The foregoing warranties and remedies are exclusive and in lieu of all others, whether written, oral or implied. There is no warranty on the merchandise or fitness for a specific use of any product. ANY CLAIM FOR BREACH OF WARRANTY MUST BE PRESENTED TO CASCADE WITHIN THIRTY (30) DAYS AFTER DISCOVERY OF THE DEFECT, OR BE BARRED.

Cascade Waterworks Mfg.

THE STANDARD OF EXCELLENCE IN THE INDUSTRY.

CASCADE WATERWORKS MANUFACTURING COMPANY
1213 Badger Street • Yorkville, Illinois 60560 • (630) 553-0840 • (800) 426-4301 Outside Illinois • Fax (630) 553-0181

THE CASCADE SYSTEM

The CASCADE Casing Spacer system replaces the old method of banding wooden skids to the carrier pipe with steel straps. Compare CASCADE's method with the obsolete one. In addition to the typical positioning design shown on this page, CASCADE has also developed designs for:

- Placing multiple carriers within one casing
- Positioning thermally insulated pipe without damage to insulation
- Centering small carriers within large casings
- Positioning gravity sewer to on grade requirements

CASCADE FEATURES:

- Low coefficient of friction —easy to push
- Corrosion proof —eliminate backfill
- Dielectric insulator —cathodic protection
- Design flexibility —position carrier positively
- Simple to use —trouble free insertion

CASCADE All Stainless Steel Casing Spacers are the state of the science system for inserting pipes within pipes. The old method of strapping on and greasing wooden skids is obsolete. Compare CASCADE'S system with the antiquated wooden skids...

CASCADE ALL STAINLESS STEEL CASING SPACERS	WOODEN SKIDS AND STRAPS
Easily attached by a single person	Require at least two sets of hands to attach
No special tools No grease	Cumbersome, time consuming, greasy. Notching and banding tools needed.
Slide into casing with minimum pushing force. **Low coefficient of friction** lets runners glide over rough spots insuring trouble free insertion. **Coefficient of Friction: .12**	**Hard to push.** Catch on weld beads. Carrier rotates. Joints are destabilized. Binding can break straps or skids, making removal and reinsertion necessary. **Coefficient of Friction: .85**
Virtually corrosion proof Dielectrically insulates carrier and holds securely without any backfill.	**Corrodes.** Requires backfill to insure long term stability.
No backfill Lowers construction costs and allows for future access.	Backfill of sand, gravel, or grout is expensive and makes future access difficult or impossible.

BASIC POSITIONS

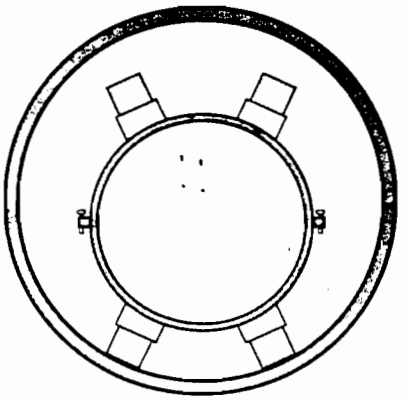

Standard: Assists installation and carries slip joint bells at least .75" off casing wall. Maintains dielectric insulation. No restraint against movement such as floatation or surge pressure bucking.

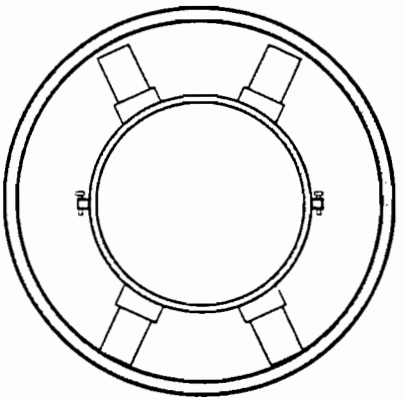

Centered: Positions carrier in center of casing. Provides restraint against movement. Best for mechanically restrained pipe joints.

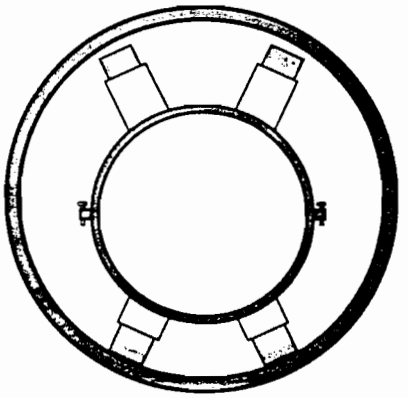

Restrained: Keeps carrier at bottom of casing while restraining against movement.

ORDERING INFORMATION

EXAMPLES:

1) Carrier - 12" DIP or C-900 PVC
Casing - 24" Steel - .375 wall
Spacer width - 8"
Configuration - Centered
CCS - 1320-8 / C23.25 CTR

2) Carrier - 48" Steel
Casing - 66" concrete
Spacer width - 12"
Configuration - Restrained
CCS - 4800-12 / C66 RES

3) Carrier - 6" SCH 40 PVC
Casing - 16" Steel .25" wall
Spacer width - 8"
Configuration - Standard
CCS - 663-8 / C15.5 STD

WHEN ORDERING CASING SPACERS, PLEASE HAVE THE FOLLOWING INFORMATION AT HAND:

Job name / Engineer's name / Bid date if applicable

Type and O.D. of carrier pipe

Type of joint

Type and I.D. of casing

Length of casing or quantity of spacers needed

Configuration requirement: standard, centered or restrained, any special installation requirements

CASCADE provides drawings for approval on all special applications.

RISER / RUNNER HEIGHTS FOR STANDARD SPACERS

2" Height through 10" pipe size.
2 1/2" Height through 48" pipe size. 3" through 64" pipe.

NUMBER OF RISER / RUNNERS REQUIRED FOR STANDARD SPACERS

4 Runners through 24" pipe size.
6 Runners through 36" pipe size.
7 Runners through 48" pipe size

CASCADE SPECIFICATIONS

Sample Specifications – General

1. Carrier pipe shall be inserted within casing by use of model CCS stainless steel casing spacers as manufactured by Cascade Waterworks Mfg. Co. of Yorkville, IL or prior approved equal.

2. Carrier pipe shall be centered within casing by use of model CCS stainless steel casing spacers as manufactured by Cascade Waterworks Mfg. Co. of Yorkville, IL or prior to approved equal.

CASING SPACERS – Reinforced cylinder pipe 36" diameter and up – Part No. CCS-ER

Casing spacer shall be made from T-304 stainless steel of a minimum thickness of 14 gauge. Each shell section shall be a minimum of 12" wide and two piece design up to 54" diameter and three piece design to 90" diameter, over 90" shall be a four piece design. Each shell section shall have a reinforced bolt and receiver bar T-304 TIG welded to the shell. Bolts shall be 5/8" – 11 X 6 1/2" lg. T-304, each bolt bar shall include three bolts, each bolt bar assembly shall allow a maximum of 1" adjustment to the circumference, to compensate for the tolerances in the RCP pipe. The shell shall be lined with a ribbed PVC extrusion with a retaining section that overlaps the edges of the shell and prevents slippage. Bearing surface (runners) shall be ultra high molecular weight polymer with high abrasion resistance and a low coefficient of friction. The runners shall be attached to support structures (risers) at appropriate positions to properly support the carrier within the casing and to ease installation. The runners shall be attached mechanically by punched riser section and bolt heads TIG welded for strength. Risers shall be made of T-304 stainless steel of a minimum 10 gauge. All risers over 6" in height shall be reinforced. Risers shall be MIG welded to the steel. The height of the risers and runners combined with the bolt bars shall be sufficient to provide not less than three fourths inch between the bell and the outside diameter of the carrier pipe. All welds and metal surfaces shall be chemically passivated. Casing spacers shall be Model CCS-ER as manufactured by Cascade Waterworks Mfg. Co. of Yorkville, IL or prior approved equal.

CASCADE SPECIFICATIONS

CASING SPACERS – Part No. CCS

Casing spacer shall be a two piece shell made from T-304 stainless steel of a minimum 14 gauge thickness. Each shell section shall have one bolt flange formed with ribs for added strength and one hook and eye section for added shear strength. Each connecting flange shall have a minimum of three 5/16" T-304 stainless steel bolts. The shell shall be lined with a ribbed PVC extrusion with a retaining section that overlaps the edges of the shell and prevents slippage. Bearing surfaces (runners) shall be ultra high molecular weight polymer with abrasion resistance and a low coefficient of friction. The runners shall be attached to support structures (risers) at appropriate positions to properly support the carrier within the casing and to ease installations. The runners shall be attached mechanically by punched riser section and bolt heads TIG welded for strength. Riser shall be made of T-304 stainless steel of a minimum 10 gauge. All risers over 6" in height shall be reinforced and MIG welded to the shell. *Standard positioning within the casing* will require the height of the risers and runners combined shall be sufficient to provide not less than three fourths inch between the casing pipe and the outside diameter of the bell. *Centered positioning within the casing* will require the risers and runners to be dimensioned to center the carrier pipe in the casing with a top clearance of one half inch minimum. All welds and metal surfaces shall be chemically passivated. Casing spacers shall be Model CCS as manufactured by Cascade Waterworks Mfg. Co. of Yorkville, IL or prior approved equal.

PVC Installation —Restraining

30" Vylon PVC into 48" casing, 750' gravity sewer
Owner: Trinity River Authority
Engineer: McDonald and Associates
Contractor: Pate Bros.

Spacers placed on spigot end at limit line for Bell insertion. When assembled, spacer pushes Bell relieving stress and reducing chances of telescoping pipes. Spacers maintain proper flow line while restraining against floatation. Casing annulus was filled with grout, therefore, spacers were made from A 36 steel to reduce costs.

SPECIFYING SPACER WIDTH & PLACEMENT INTERVALS

When deciding the width and placement intervals of Cascade casing spacers, the main concerns are pipe stiffness, joint stability, height of separation between carrier and casing, and live load. Generally, stiffer pipe can be supported adequately at greater intervals than more flexible pipe. Casing pipes have deflections, ridges, or otherwise uneven surfaces. Care should be taken to maintain joint stability during, as well as after, installation.

Unless special circumstances exist, Cascade recommends 8" wide spacers at 10' intervals on sizes up to 48" ductile iron, steel, asbestos cement, and C-900 PVC pipes. For 24" and larger pipe 6' intervals and/or 12" wide spacers should be considered if the separation between carrier and casing is greater than 5".

All pipes over 48" O.D. should be supported with 12" wide spacers. 10' intervals are adequate through 60" O.D. for ductile iron and steel pipes. Concrete and prestressed concrete cylinder pipe require shorter intervals. Always use Model CCS-ER Spacers.

PVC sewer pipes and thinner wall PVC pressure pipes need support at closer intervals. Most PVC gravity sewer lines should be supported at 6' intervals.

Polyethylene pipes vary widely in the interval required depending on the wall thickness and the maximum allowable deflection between supports. The pipe manufacturer should be consulted if intervals longer than 6' are desired.

In all instances, a spacer should be placed so as to support the carrier within 2' of the ends of the casing pipe.

Please consult Cascade if there are any special conditions or if any questions arise

THE CASCADE SYSTEM

SAMPLE DRAWINGS

MULTIPLE CARRIERS

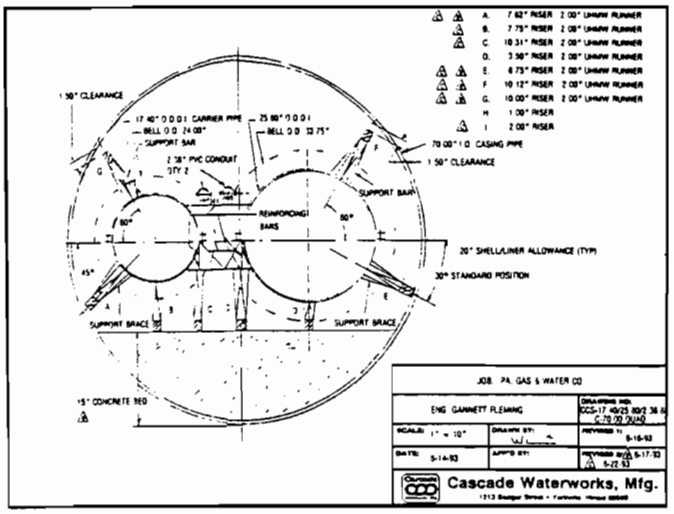

TUNNEL LINER

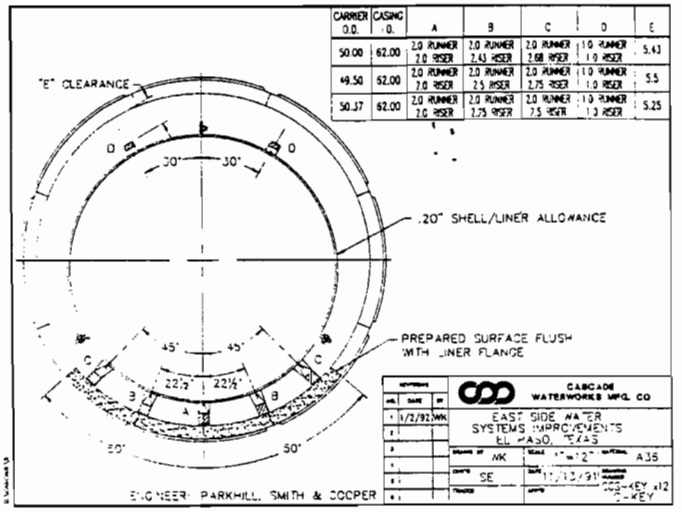

DUAL CARRIERS

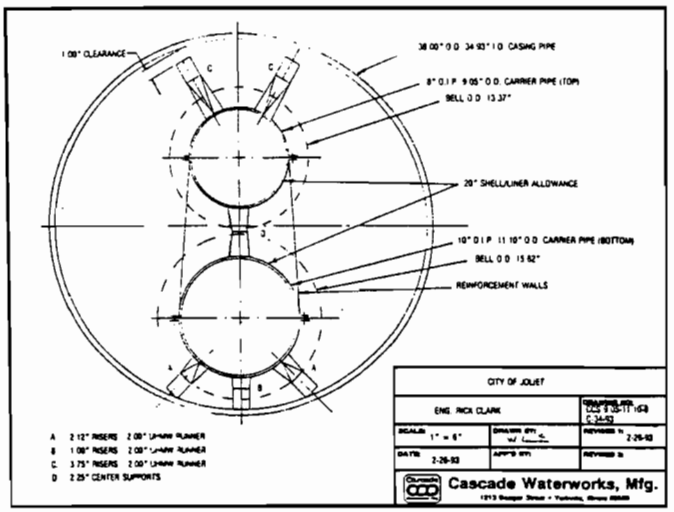

CORRECTING FOR GRADE

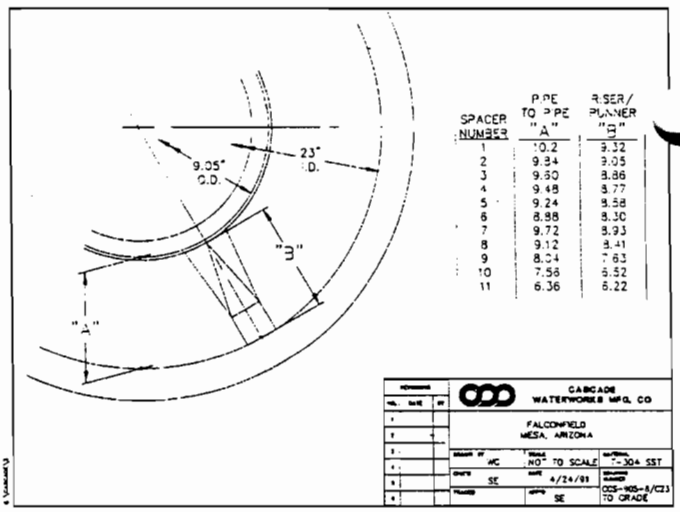

CENTERED CONFIGURATION

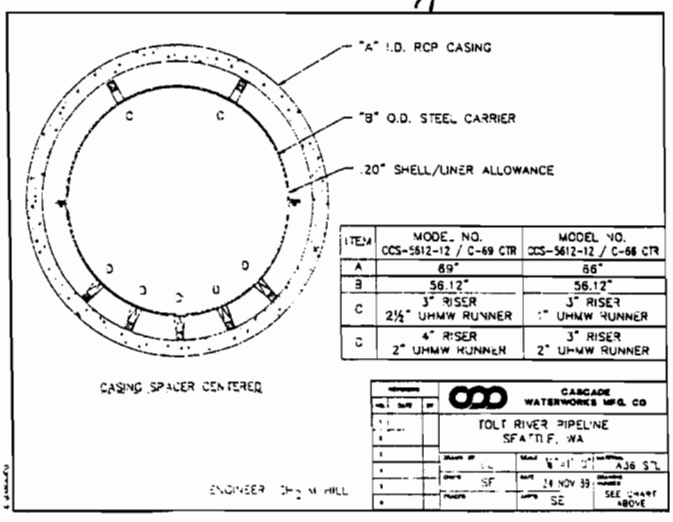

RESTRAINED CONFIGURATION

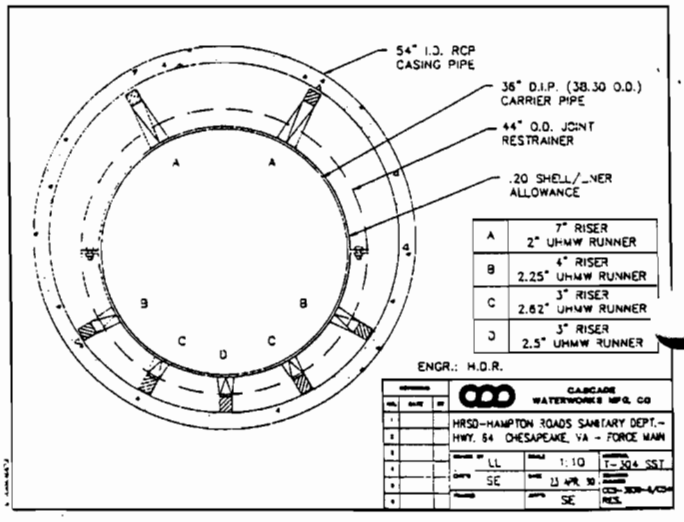

Milherst Construction, Inc.
P.O. Box 631
Getzville, New York 14068

Phone (716) 688-9098
Fax (716) 688-9562

Submittal No. 9

Lehigh Valley RR Derailment Site

Owner NYS Department of Environmental Conservation
Bureau of Construction Services, 12th Floor
625 Broadway
Albany, NY 12233-7013

Contractor Milherst Construction, Inc
Date 12/18/01

Item: Ductile Iron Pipe - Tyton joint

Specification:

Section: 02610
Page No.: 02610-2
Para. No.: 2.02
Drawing No.: N/A
Location: Continuous

I hereby certify that review, verification of products required, field dimentions, adjacent construction work and coordination of information, is in compliance with the requirements of the work and contract documents.

Approved By: Charles F. Kubinec

☒ APPROVED
☐ APPROVED AS CORRECTED
(Resubmit final copy for file)

☐ REVISE AND RESUBMIT BEFORE PROCEEDING
☐ NOT APPROVED

Review only for conformance with the design concept of the project and with information given in the Contract Documents. The Contractor is responsible for: verifying that dimensions are confirmed and correlated at the job site; obtaining information that pertains to the fabrication processes or to techniques of construction, and: coordinating the work of all subcontractors.
STEARNS & WHELER, LLC Engineers and Scientists

By TJF Date 12/28/01

Griffin Pipe Products Co.

ONE OF THE Amsted INDUSTRIES

Technical Data Sheet No. 120

9/1/93

Ductile Iron Pipe
TYTON JOINT® Pipe
Thickness Class Designation

Specifications

Pipe shall be ductile iron manufactured in accordance with the requirements of ANSI/AWWA C151/A21.51. Push-on joints for such pipe shall be in accordance with ANSI/AWWA C111/A21.11. Pipe shall be Griffin or equal. Pipe thickness shall be designed in accordance with ANSI/AWWA C150/A21.50 and shall be based on laying conditions and internal pressure as specified in the project plans.

Pipe shall have cement mortar lining and seal coating, where applicable, in accordance with ANSI/AWWA C104/A21.4.

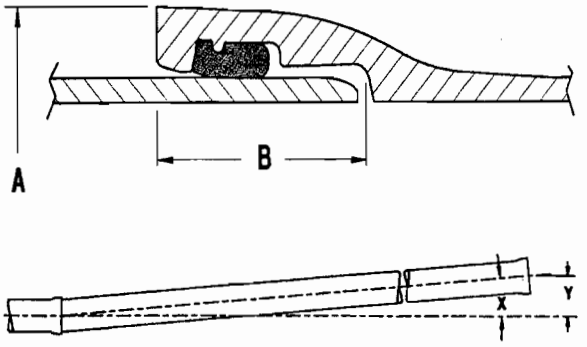

Dimensions & Weights

Pipe Barrel							Laying Length 18 ft.		Laying Length 20 ft.	
Size in.	Thick. Class	Nom. Thick. in.	Nom. O.D. in.	A Bell O.D. in.	B Bell Depth in.	X Defl. Angle deg.	Wt. Per Lgth.† lb.	Y Max. Defl. in.	Wt. Per Lgth.† lb.	Y Max. Defl. in.
3	51	0.25	3.96	5.48	3.00	5	168	19		
	52	0.28	3.96	5.48	3.00	5	186	19		
	53	0.31	3.96	5.48	3.00	5	204	19		
	54	0.34	3.96	5.48	3.00	5	221	19		
	55	0.37	3.96	5.48	3.00	5	238	19		
	56	0.40	3.96	5.48	3.00	5	254	19		
4	51	0.26	4.80	6.52	3.15	5	214	19		
	52	0.29	4.80	6.52	3.15	5	236	19		
	53	0.32	4.80	6.52	3.15	5	258	19		
	54	0.35	4.80	6.52	3.15	5	280	19		
	55	0.38	4.80	6.52	3.15	5	301	19		
	56	0.41	4.80	6.52	3.15	5	321	19		
6	50	0.25	6.90	8.66	3.38	5	304	19	336	21
	51	0.28	6.90	8.66	3.38	5	337	19	372	21
	52	0.31	6.90	8.66	3.38	5	370	19	409	21
	53	0.34	6.90	8.66	3.38	5	402	19	445	21
	54	0.37	6.90	8.66	3.38	5	434	19	481	21
	55	0.40	6.90	8.66	3.38	5	466	19	516	21
	56	0.43	6.90	8.66	3.38	5	497	19	551	21
8	50	0.27	9.05	10.82	3.69	5	431	19	477	21
	51	0.30	9.05	10.82	3.69	5	475	19	526	21
	52	0.33	9.05	10.82	3.69	5	519	19	574	21
	53	0.36	9.05	10.82	3.69	5	562	19	622	21
	54	0.39	9.05	10.82	3.69	5	605	19	670	21
	55	0.42	9.05	10.82	3.69	5	648	19	718	21
	56	0.45	9.05	10.82	3.69	5	691	19	765	21

SUBMITTAL
MILLHERST CONSTRUCTION, INC.
Job: D 004327
Item: D.I.P.
Descr: Tyton Joint
Reviewed By: CFIC
Date: 12/18/01

NOTE: 10" THRU 24"
continued on back.

TYTON JOINT® is a registered trademark of U.S. Pipe and Foundry Co.

Plants and Regional Sales Offices:

Council Bluffs, Iowa 51501
2601 Ninth Avenue
712/325-5131 Fax 712/325-5139

Florence, New Jersey 08518
1100 West Front Street
609/499-1400
Fax 609/499-4868

Lynchburg, Virginia 24505
Adams St. - Upper Basin, Box 740
804/522-4742 Fax 804/522-4739

Ductile Iron Pipe

TYTON JOINT® Pipe
Dimensions & Weights Continued

Pipe Barrel							Laying Length			
							18 ft.		20 ft.	
Size in.	Thick. Class	Nom. Thick. in.	Nom. O.D. in.	A Bell O.D. in.	B Bell Depth in.	X Defl. Angle deg.	Wt. Per Lgth.† lb.	Y Max. Defl. in.	Wt. Per Lgth.† lb.	Y Max. Defl. in.
10	50	0.29	11.10	12.91	3.75	5	569	19	630	21
	51	0.32	11.10	12.91	3.75	5	624	19	690	21
	52	0.35	11.10	12.91	3.75	5	678	19	750	21
	53	0.38	11.10	12.91	3.75	5	732	19	810	21
	54	0.41	11.10	12.91	3.75	5	785	19	870	21
	55	0.44	11.10	12.91	3.75	5	839	19	929	21
	56	0.47	11.10	12.91	3.75	5	892	19	988	21
12	50	0.31	13.20	15.05	3.75	5	724	19	801	21
	51	0.34	13.20	15.05	3.75	5	790	19	874	21
	52	0.37	13.20	15.05	3.75	5	854	19	946	21
	53	0.40	13.20	15.05	3.75	5	919	19	1,017	21
	54	0.43	13.20	15.05	3.75	5	983	19	1,089	21
	55	0.46	13.20	15.05	3.75	5	1,047	19	1,160	21
	56	0.49	13.20	15.05	3.75	5	1,111	19	1,230	21
14	50	0.33	15.30	17.62	5.00	5	909	19	1,004	21
	51	0.36	15.30	17.62	5.00	5	985	19	1,088	21
	52	0.39	15.30	17.62	5.00	5	1,060	19	1,172	21
	53	0.42	15.30	17.62	5.00	5	1,135	19	1,256	21
	54	0.45	15.30	17.62	5.00	5	1,210	19	1,339	21
	55	0.48	15.30	17.62	5.00	5	1,285	19	1,422	21
	56	0.51	15.30	17.62	5.00	5	1,359	19	1,504	21
16	50	0.34	17.40	19.74	5.00	5	1,066	19	1,177	21
	51	0.37	17.40	19.74	5.00	5	1,152	19	1,273	21
	52	0.40	17.40	19.74	5.00	5	1,239	19	1,369	21
	53	0.43	17.40	19.74	5.00	5	1,325	19	1,465	21
	54	0.46	17.40	19.74	5.00	5	1,410	19	1,560	21
	55	0.49	17.40	19.74	5.00	5	1,496	19	1,655	21
	56	0.52	17.40	19.74	5.00	5	1,581	19	1,750	21
18	50	0.35	19.50	21.86	5.00	5			1,356	21
	51	0.38	19.50	21.86	5.00	5			1,464	21
	52	0.41	19.50	21.86	5.00	5			1,572	21
	53	0.44	19.50	21.86	5.00	5			1,679	21
	54	0.47	19.50	21.86	5.00	5			1,787	21
	55	0.50	19.50	21.86	5.00	5			1,894	21
	56	0.53	19.50	21.86	5.00	5			2,000	21
20	50	0.36	21.60	23.98	5.50	5			1,542	21
	51	0.39	21.60	23.98	5.50	5			1,662	21
	52	0.42	21.60	23.98	5.50	5			1,782	21
	53	0.45	21.60	23.98	5.50	5			1,902	21
	54	0.48	21.60	23.98	5.50	5			2,021	21
	55	0.51	21.60	23.98	5.50	5			2,140	21
	56	0.54	21.60	23.98	5.50	5			2,259	21
24	50	0.38	25.80	28.16	5.95	5			1,953	21
	51	0.41	25.80	28.16	5.95	5			2,097	21
	52	0.44	25.80	28.16	5.95	5			2,241	21
	53	0.47	25.80	28.16	5.95	5			2,385	21
	54	0.50	25.80	28.16	5.95	5			2,528	21
	55	0.53	25.80	28.16	5.95	5			2,671	21
	56	0.56	25.80	28.16	5.95	5			2,814	21

† Including bell.

Pipe is normally manufactured with a cement-mortar lining. Above weights do not include lining. Standard lining thickness for 4" - 12" diameter pipe is 1/16" minimum: for 14" - 24" diameter pipe is 3/32" minimum.

Milherst Construction, Inc.
P.O. Box 631
Getzville, New York 14068

Phone (716) 688-9098
Fax (716) 688-9562

Submittal No. 10

Lehigh Valley RR Derailment Site

Owner NYS Department of Environmental Conservation
Bureau of Construction Services, 12th Floor
625 Broadway
Albany, NY 12233-7013

Contractor Milherst Construction, Inc
Date 12/18/01

Item: Ductile Iron Pipe - Restrained joint

Specification:

Section: 02610
Page No.: 02610-2
Para. No.: 2.03
Drawing No.: N/A
Location: Road Bores

I hereby certify that review, verification of products required, field dimentions, adjacent construction work and coordination of information, is in compliance with the requirements of the work and contract documents.

Approved By: Charles F. Kubinec

1. Pipe shall be Class 51
2. Pipe shall be cement lined

☐ APPROVED
☒ APPROVED AS CORRECTED
~~(Resubmit final copy for file)~~
☐ REVISE AND RESUBMIT BEFORE PROCEEDING
☐ NOT APPROVED

Review only for conformance with the design concept of the project and with information given in the Contract Documents. The Contractor is responsible for: verifying that dimensions are confirmed and correlated at the job site; obtaining information that pertains to the fabrication processes or to techniques of construction, and: coordinating the work of all subcontractors.
STEARNS & WHELER, LLC Engineers and Scientists

By TJF Date 12/28/01

Griffin Pipe Products Co.

ONE OF THE Amsted INDUSTRIES

Technical Data Sheet No. 101

4/1/95

Restrained Joint Ductile Iron Pipe

SUBMITTAL
MILHERST CONSTRUCTION, INC.
Job: D004327
Item: D.I.P.
Restrained Jt.
Approved By:
Date: 12/18/01

SNAP-LOK™

Specifications

Pipe shall be ductile iron manufactured in accordance with the requirements of ANSI/AWWA C151/A21.51. Push-on joints for such pipe shall be in accordance with ANSI/AWWA C111/A21.11. Pipe shall be Griffin SNAP-LOK or equal. Pipe thickness shall be designed in accordance with ANSI/AWWA C150/A21.50 and shall be based on laying conditions and internal pressures as specified in the project plans.

Fittings shall be ductile iron and in accordance with applicable requirements of either ANSI/AWWA C153/A21.53 or ANSI/AWWA C110/A21.10 and shall utilize Griffin BOLT-LOK Pipe spigots for restraint when required.

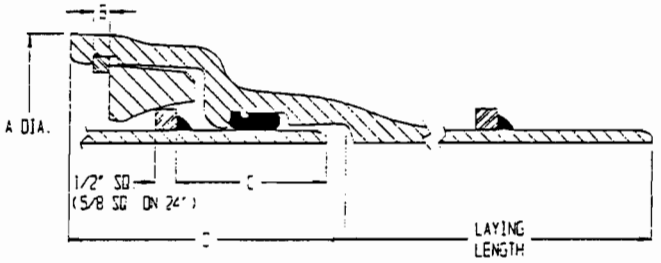

Dimensions and Weights

Size	A Dia.	B	C	D	Laying Lgth.*	Defl. Angl	Add'l† Weight
6	11.44	.375	3.500	6.51	19'11"	4°	32
8	13.97	.375	4.000	7.19	19'10"	4°	47
10	16.44	.500	4.125	7.25	19'10"	4°	75
12	18.75	.500	4.250	7.50	19'10"	4°	88
14	20.96	.500	5.250	8.88	19'9"	3°	113
16	23.22	.500	5.250	8.95	19'8"	3°	134
18	25.72	.625	5.375	9.07	19'8"	3°	158
20	27.85	.625	6.000	9.88	19'7"	3°	216
24	32.54	.625	6.250	10.58	19'6"	3°	303

Dimensions in Inches

* SNAP-LOK and either SNAP-LOK, BOLT-LOK or plain spigot end.
† Additional weight including accessories over class 56 pipe. Lighter classes will be slightly heavier.

BOLT-LOK™

Restrained joint for pipe and fittings shall be designed for a working pressure of 350 psi in sizes 4" through 14" and a minimum of 250 psi for sizes 16" through 24". Joint shall be capable of being deflected, after assembly, 4° in 4" through 12" sizes and 2° in 14" through 24" sizes.

Pipe and fittings shall have cement mortar lining and seal coating, where applicable, in accordance with ANSI/AWWA C104/A21.4.

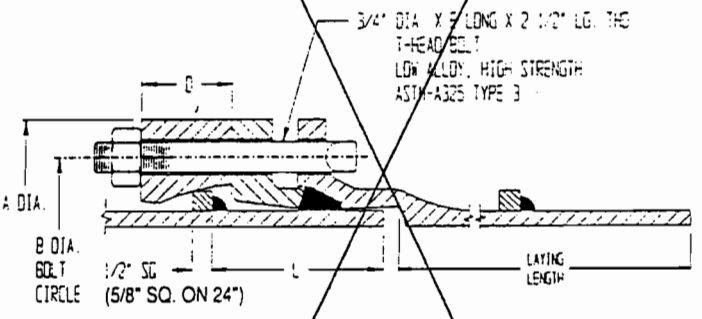

Size	A Dia.	B Dia.	D	Bolt Lgth. E	No. of Bolts	L	Laying Lgth.**	Defl. Angle	Add'l‡ Weight
4	9.38	7.50	2.00	6	4	3.75	18'0"	4°	36
6	11.38	9.50	2.00	6	6	4.00	20'0"	4°	49
8	13.63	11.75	2.25	6	6	4.00	20'0"	4°	69
10	15.88	14.00	2.25	6	8	4.00	20'0"	4°	86
12	18.19	16.25	2.50	7	8	4.00	20'0"	4°	107
14	20.50	18.75	2.50	7	10	5.25	20'0"	3°	134
16	22.75	21.00	2.63	7	12	5.25	20'0"	3°	163
18	25.75	23.25	2.63	7	12	5.50	20'0"	2½°	187
20	28.25	25.50	2.88	8	14	5.75	20'0"	2½°	245
24	32.50	30.00	3.00	8	16	5.75	20'0"	2°	302

Dimensions in Inches

** MJ socket and either SNAP-LOK or plain spigot end.
‡ Additional weight of accessories over MJ pipe. The BOLT-LOK system is used primarily to provide restraint at fittings and appurtenances.

SNAP-LOK™ and BOLT-LOK™ are trademarks of Griffin Pipe Products Co.

Plants and Regional Sales Offices:

Council Bluffs, Iowa 51501
2601 Ninth Avenue
712/325-5131 Fax 712/325-5139

Florence, New Jersey 08518
1100 West Front Street
609/499-1400 1-800-272-2006
Fax 609/499-4868

Lynchburg, Virginia 24505
Adams St. - Upper Basin, Box 740
804/522-4742 Fax 804/522-4739

Milherst Construction, Inc.
P.O. Box 631
Getzville, New York 14068

Phone (716) 688-9098
Fax (716) 688-9562

Submittal No. 11

Lehigh Valley RR Derailment Site

Owner NYS Department of Environmental Conservation
Bureau of Construction Services, 12th Floor
625 Broadway
Albany, NY 12233-7013

Contractor Milherst Construction, Inc
Date 12/18/01

Item: Gate Valve

Specification:

Section: 02660
Page No.: 02660 - 2
Para. No.: 2.01
Drawing No.: G-29
Location: Continuous on project

I hereby certify that review, verification of products required, field dimentions, adjacent construction work and coordination of information, is in compliance with the requirements of the work and contract documents.

Approved By: Charles T. Kubinec

☒ **APPROVED**
☐ **APPROVED AS CORRECTED**
(Resubmit final copy for file)

☐ **REVISE AND RESUBMIT BEFORE PROCEEDING**
☐ **NOT APPROVED**

Review only for conformance with the design concept of the project and with information given in the Contract Documents. The Contractor is responsible for: verifying that dimensions are confirmed and correlated at the job site; obtaining information that pertains to the fabrication processes or to techniques of construction, and: coordinating the work of all subcontractors.
STEARNS & WHELER, LLC Engineers and Scientists

By TSF Date 12/28/01

Note: see Submittal No. 15 for valve requirements

U.S. PIPE

METROSEAL® 250
Resilient Seated Gate Valve
3"-16"

For Water and Wastewater

Fire Protection and Industrial Applications

1995 Edition

SUBMITTAL
MILLER CONSTRUCTION, INC.
Job: D004327
Item: Various
Descr: Gate Valves
Reviewed By: CFK
Date: 12/18/01

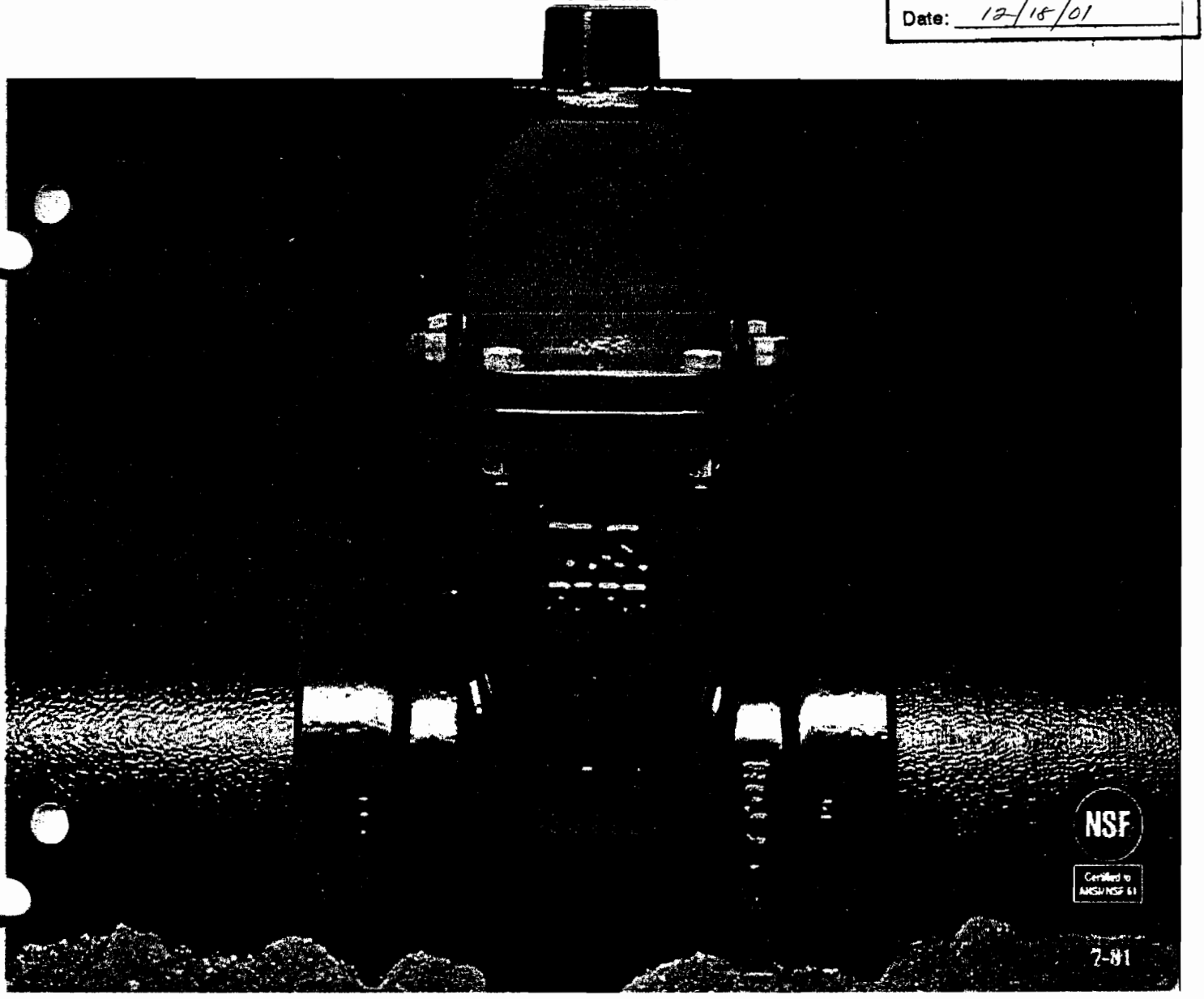

FOREWORD

We appreciate your interest in our growing line of METROSEAL® 250 Resilient Seated Gate Valves. And we're sure you'll appreciate everything we've put into making them the best R/S valves on the market.

Resilient Seated Gate Valves are gaining rapid acceptance throughout the water and sewer industry. This remarkable growth is due to:

- The ability to seal tightly with no leakage.
- Assurance that the valve will operate reliably after long periods of inactivity

The standards of design and construction for R/S valves, as outlined in ~~AWWA C509,~~ are identical to the C500 standards for double disc gate valves in all common areas, such as body, bonnet, stem, seals, and number of turns to operate. The only differences between the standards occur in the way the valve seals between the gate and the body.

METROSEAL® 250 Valves from U.S. Pipe exceed the requirements of the AWWA standard in a number of significant areas:

- All METROSEAL® 250 Valves are rated for 250 psi operating pressure and tested at 500 psi.
- The body, bonnet and gate are Ductile iron, instead of gray iron. (3 " gates are bronze.)
- METROSEAL® 250 Valves have been tested in excess of 1000 cycles of operation at 250 psi differential pressure at closing, without damage to any components, including the epoxy coating.
- METROSEAL® 250 Valves are coated with PERMAFUSE® Epoxy coating on all internal and external surfaces.
- METROSEAL® 250 Valves 4"-16" can be ordered meeting the special requirements of Underwriters Laboratories, Inc. or Factory Mutual Research Corporation.

The METROSEAL® 250 R/S Valves represent the state-of-the-art from the leaders in piping technology. We invite you to read on and size them up. All the way up to 16 ". Then by a comparison to any competitive R/S valve. We think you'll find there just isn't any.

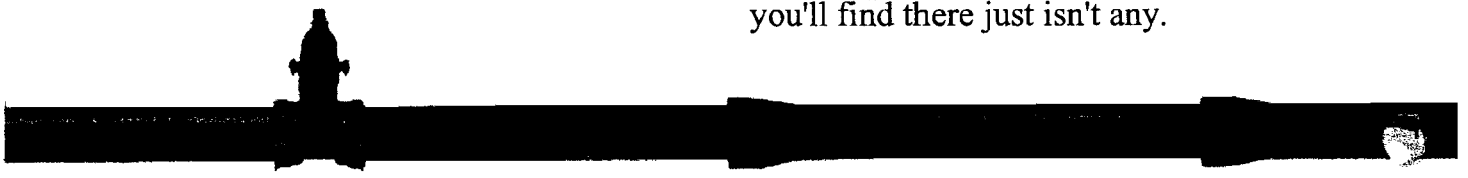

New ideas are flowing at U. S. Pipe.

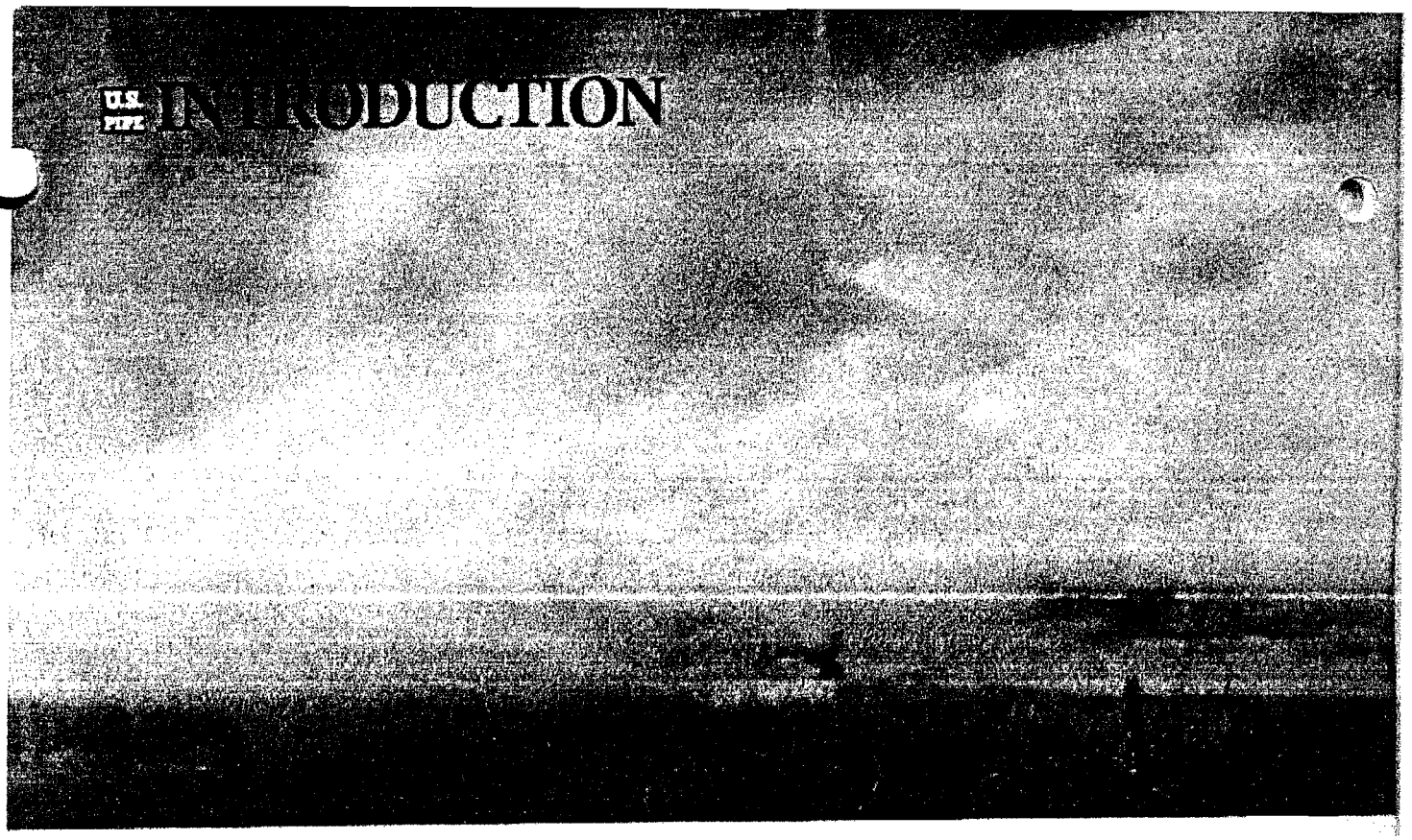

Rated for 250 psi Operating Pressures

The ductile iron METROSEAL® 250 Resilient Seated Gate valve represents a combination of state of the art design and manufacturing methods plus exclusive U.S. Pipe patented features. Extensive tests, *made under high pressure and velocity conditions,* demonstrate that METROSEAL® 250 valves will operate through thousands of cycles at 250 psi pressure with no damage and virtually no wear to any part of the valve-including the PERMAFUSE® Epoxy coating in the body and rubber coating on the gate. Inside and out, METROSEAL® 250 valves are engineered for ease of operation and trouble-free service.

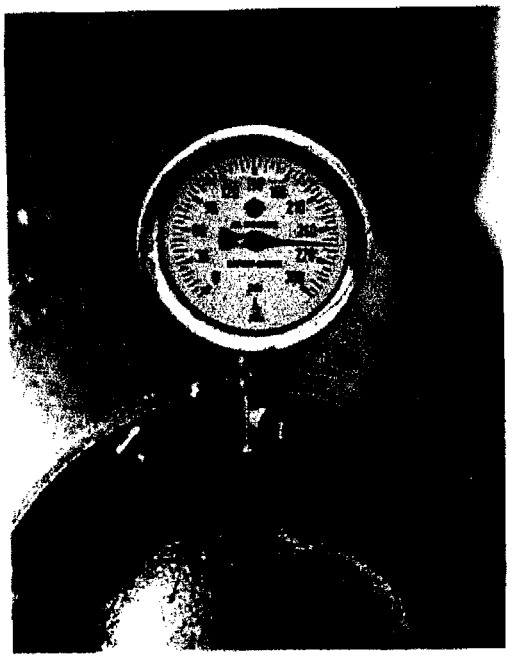

Size Range: 3-inch through 16-inch

METROSEAL® 250 valves are made in sizes 3-inch through 16-inch. They are designed, manufactured and tested to meet or exceed all the applicable requirements of AWWA C509 (AWWA Standard for Resilient Seated Gate Valves for Water and Sewerage Systems); and AWWA C500 (AWWA Standard for Gate Valves).

CAD/CAM Technology

The METROSEAL® 250 valve was developed with the use of CAD/CAM technology (Computer Aided Design-Computer Aided Manufacture). The complex curved sealing surfaces of the valve body and rubber coated gate were designed on a computer. These simulated

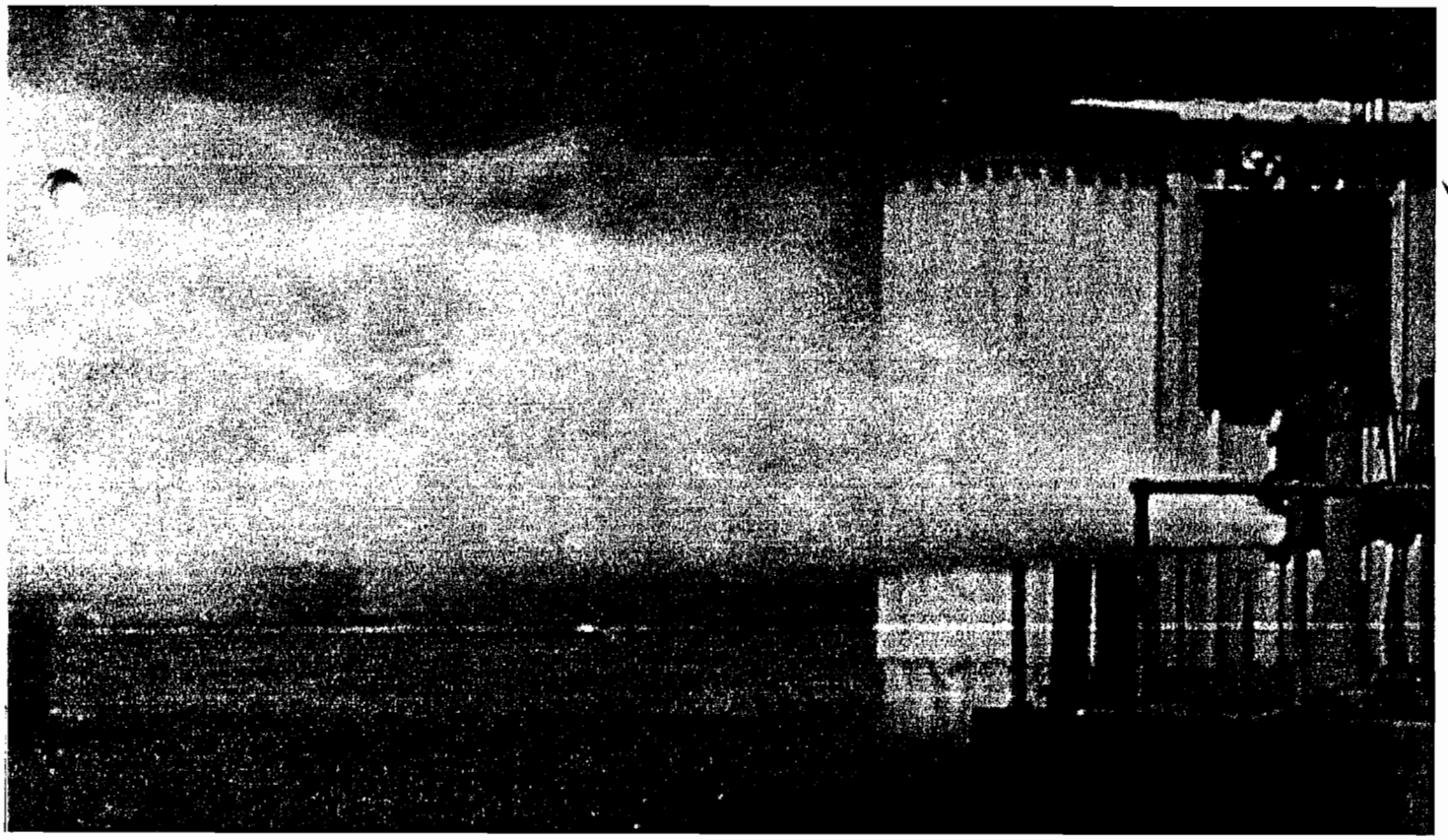

model parts were mated on the computer to assure uniform compression for the bulb shaped sealing surfaces of the gate The three dimensional coordinates of these computer generated parts were programmed into an NC (Numerically Controlled) machining center to accurately machine the production equipment for the valve bodies and gates.

Individually Tested

All METROSEAL® 250 valves undergo two hydrostatic proof tests before shipment from the factory. The first is a 500 psi test with the gate open and with both end joints sealed (bulkheaded). This test proves the body/ bonnet seal and stem O-ring seals, in addition to proving the strength of the ductile iron body and bonnet. In the second test, 250 psi pressure is imposed on each side of the closed gate with no pressure on the opposite side. No leakage is allowed. This test proves the sealing qualities of the gate for 250 psi service. During course of these tests, the valve is cycled from fully open to fully closed to assure that it operates properly.

More information about the materials and testing associated with resilient seated gate valves may be found in the AWWA C509 standard.

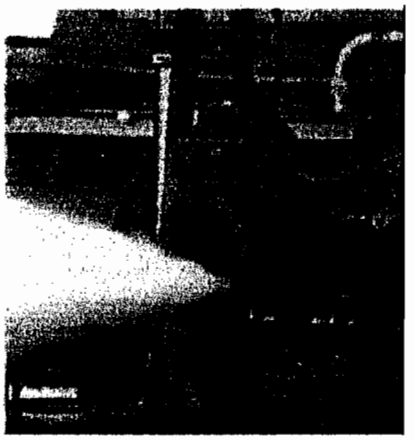

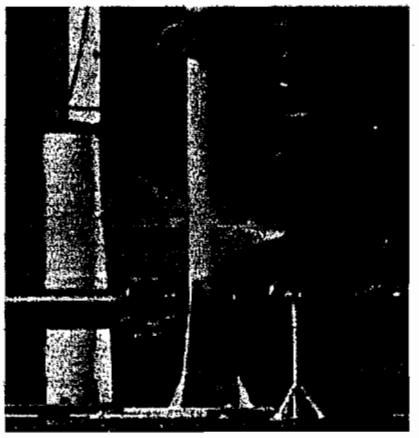

FEATURES AND BENEFITS

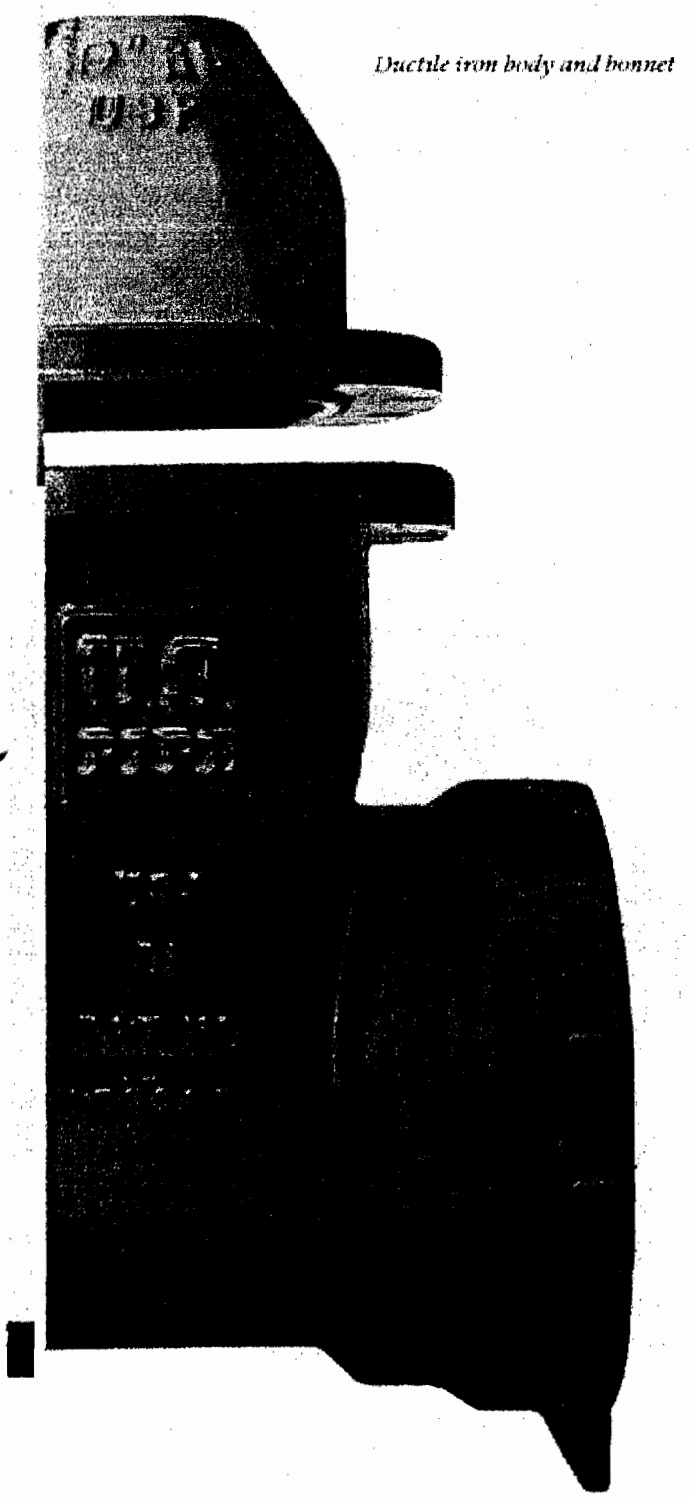

Ductile iron body and bonnet

Ductile Iron

The METROSEAL® 250 Valve body, bonnet and gate castings are all ductile iron (3" gates are bronze). In all sizes through 16 ", thicknesses conform to those listed for gray iron in the applicable AW WA gate valve standards, and are not reduced.

A ductile iron valve is a much stronger valve, more resistant to damage from abuse and improper installation. The use of ductile iron allows for a higher pressure rating which gives a greater safety factor over normal operating pressures.

Patented Guides and Stem Seal

The thermoplastic guides and cartridge stem seals are both U.S. Pipe patented features of all METROSEAL® 250 Valves.

Gate Guide Inserts
(U.S. Patent 4,532,957)
Thermoplastic gate guide inserts are locked into the guide slots of the gate They engage the PERMAFUSE® Epoxy coated guide rails inside the valve body This exclusive guide system accomplishes two important things:

First, the gate is kept in proper alignment with the body so that the rubber sealing surfaces are evenly compressed when the gate is closed. The valve can be operated using considerably less torque than with conventional gate valves.

Second, the METROSEAL® 250 valve is able to seal repeatedly at full flow and 250 psi-at low torque and zero leakage-over a thousand cycles with no damaging wear to *either the guide inserts, the* valve *body* epoxy coating, or the gate *rubber encapsulation*. And with no wear there's no chance for corrosion.

Cartridge Stem Seal
(U.S. Patent 3,912,221)
The seal between the stem and the bonnet is composed of a thermoplastic cartridge incorporating O-rings. The seal conforms to the requirements of Section 4.8 Stem Sealing of AWWA C509-87. The O-rings in the cartridge seal can be replaced while the valve is under pressure and while in either the fully open or fully closed position.

And the low friction on the O-rings makes the valve easy to operate through thousands of cycles without damage or leakage

PERMAFUSE® Epoxy Coating:

Both the inside and outside surfaces of the body and bonnet are protected with fusion bonded PERMAFUSE® Epoxy having exceptional abrasion and corrosion resistant properties. Examination of METROSEAL® 250 Valves cycled over 1000 times, under full flow with 250 psi at closing shows no damage to the PERMAFUSE® Epoxy coating.

Meets or Exceeds Standard Test Requirements

The PERMAFUSE® Epoxy coating has been tested in accordance with AWWA Standard 0550 (Protective Epoxy Coatings for Valves and Hydrants) and meets or exceeds all test requirements, including the following:

FDA Test Requirement

PERMAFUSE® Epoxy coating is formulated from materials deemed acceptable in the Food and Drug Administration document Title 21 of the Federal Regulations on Food Additives, Section 175.000 entitled *Resinous anti Polymeric Coating.*

Impact Test Requirement

PERMAFUSE® Epoxy coating withstands a direct impact in excess of 20 in-lbs force applied to convex and concave cylindrical surfaces of a 4-inch x 6-inch test coupon, when tested in accordance with the ASTM D2794 test for resistance of organic coatings to the "Effects of Rapid Deformation-Impact."

Submersion Test Requirement

PERMAFUSE® Epoxy coating shows no disbondment or blistering on "X" scribed con cave and convex cylindrical surfaces of test coupons after 500 hours of immersion in 150° F distilled water.

Tougher Than Liquid Coatings

PERMAFUSE® Epoxy coating is tougher, more abrasion resistant, and more durable than sprayed or painted on liquid epoxies. These benefits are important to the critical parts of

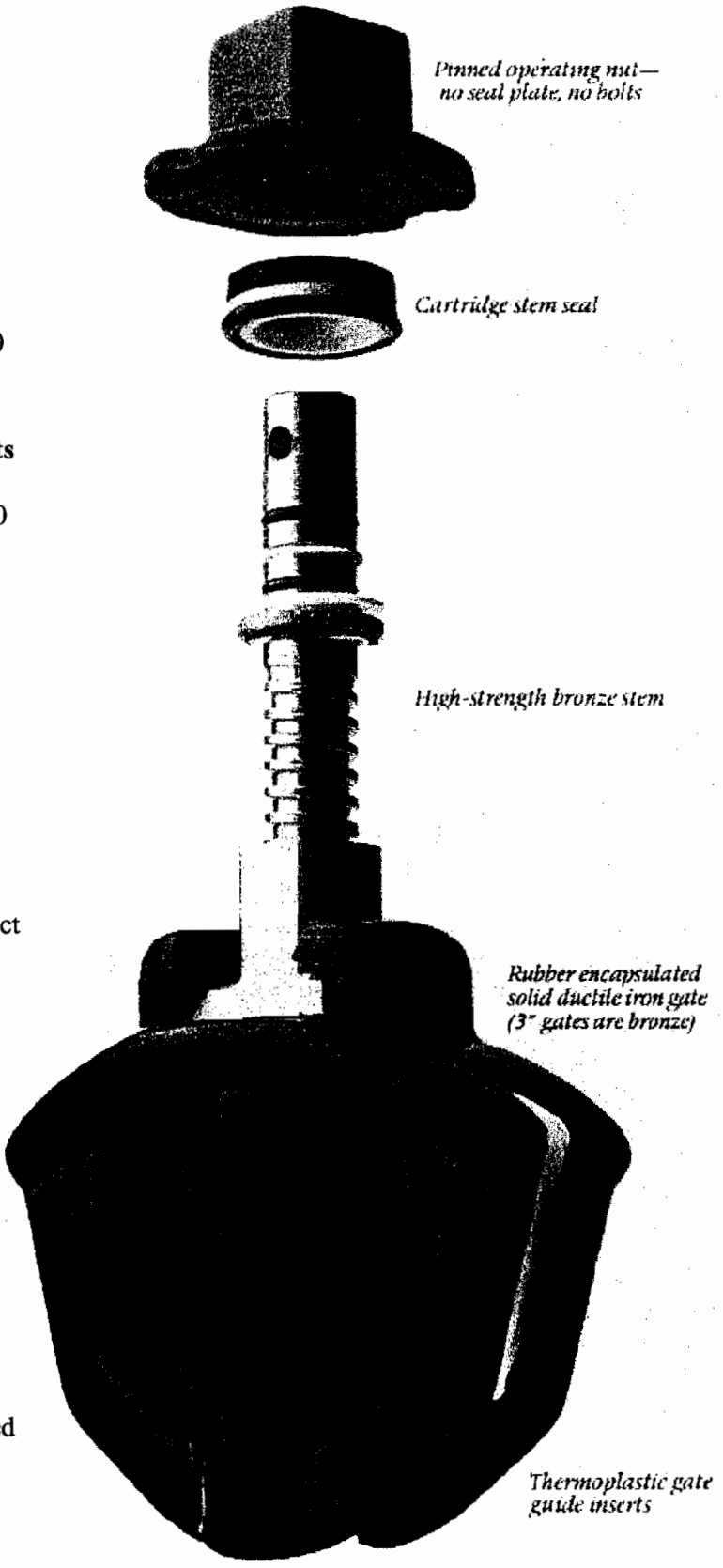

the valve where longer life and more dependable valve operation is essential. This is especially attractive if the valve is expected to be inactive for long periods.

Rubber Encapsulated Gate:

Totally Encapsulated

All surfaces of the solid ductile iron gate, including the stem hole, are encapsulated in rubber tightly bonded to the gate. No bare metal is left exposed. Both the rubber and the adhesive meet or exceed all the requirements of AWWA C509 (3" gates are bronze).

Symmetrical Sealing

A direct result of Computer Aided Design, the rubber sealing bulbs of the gate and the sealing surfaces of the body are symmetrical. Since the gate bulbs seal on both the upstream and downstream sides of the gate, the performance and sealing ability of the valve are not affected by the direction of the flow. The deformation of the rubber sealing bulbs is limited by design to prevent damage and assure long-term, trouble-free service. Even after over 1000 cycles of operation, under flow conditions with 250 psi on the gate at closing, the rubber shows no evidence of damage or wear.

16-Inch METROSEAL® 250 Valves

250 psi Rated

All sizes of the METROSEAL® 250 Valve, including the 16-inch, are rated for 250 psi operating pressure. Other 16-inch AWWA gate valves are rated for only 150 psi operating pressure.

Alternative to a Butterfly Valve

Its ruggedness and ease of operation make the 16-inch METROSEAL® 250 Valve an ideal alternative to a 16-inch butterfly valve.

The 16-inch METROSEAL® 250 Valve can be readily operated at 250 psi by one man, therefore a by-pass valve is not necessary. And with its low operating torques, spur gearing is not necessary for vertically mounted valves and is not offered.

The 16-inch METROSEAL® 250 Valve is suitable for throttling service.

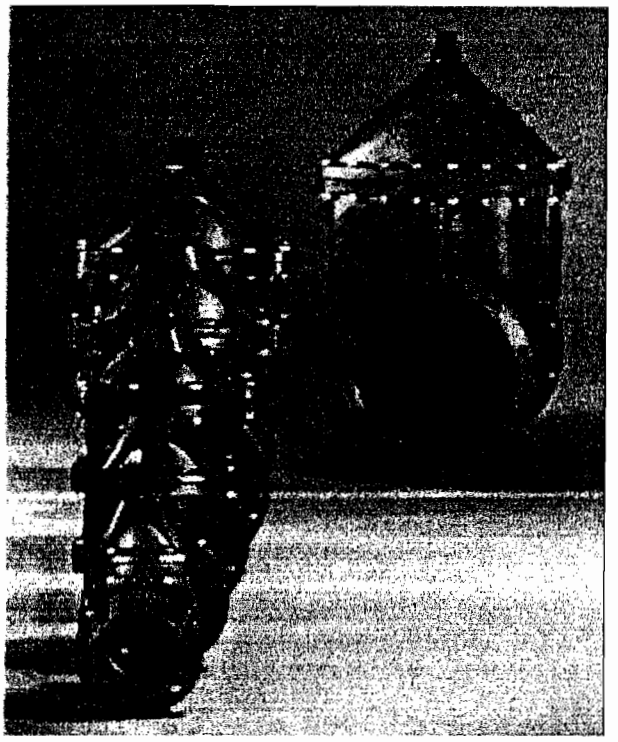

4" through 16" METROSEAL® 250 Mechanical Joint Valves.

Sixteen inch METROSEAL® 250 Valves are designed to be buried underground and operated with a 2" square valve wrench through a valve box. It is not necessary for them to be installed in a vault for accessibility since adjustment or maintenance requiring disassembly is not required.

With the gate of the METROSEAL® 250 Valve in the open position there is a clear waterway which permits "pigging" operations not possible in lines utilizing butterfly valves.

Horizontal Service-Bevel Gear Operator

Shallow depth of bury or other conditions of service may require that the valve be installed in the horizontal position. In this case the valve will befitted with a nut-operated 2:1 bevel gear designed for buried service for operation through a valve box.

The bevel gear is also suitable for use when the valve is installed above ground in exposed locations, in various positions, for handwheel or chain wheel operations in both NRS and OS&Y styles.

AVAILABLE STYLES OF METROSEAL® 250 VALVES 3 "-16"

The METROSEAL® 250 Valve is presently available in combinations of stem and body configurations to fit a wide variety of applications.

Stem and Operator Options

NRS (Non-Rising Stem)

The NRS valve, as the name implies, has a stem that does not move as the valve gate raises or lowers. The valve stem has threads inside the valve body, and the gate travels up and down the threads to open and close the valve. It is not possible to determine the gate position (if a valve is opened or closed) by observing the stem. NRS valves are usually furnished with a 2-inch square operating nut. Flanged NRS valves are normally furnished with a handwheel.

OS&Y (Outside Screw and Yoke)

The stem of an OS&Y valve consists of a threaded portion outside the valve body and a smooth portion inside the body. The stem raises and lowers with the valve gate and is therefore a positive indicator of the position of the gate. This stem indication is particularly important for critical service valves, like those in fire systems, to show at a glance whether a valve is open or closed.

The smooth internal stem of the valve makes the OS&Y valve suitable for highly abrasive flow applications. These valves are furnished with a handwheel.

Chain Wheel Operated Valves

In addition to handwheels, valves can also be fitted with chain wheels.

16" METROSEAL® 250 Valve-Bevel Gearing

An additional option for the 16-inch valve is a 2:1 ratio right angle enclosed bevel gearing (EBG) to allow aboveground operation. The bevel gearing allows for aboveground operation, through a valve box, of underground NRS valves installed in the horizontal position. Bevel gearing is also available for OS&Y valves.

Motor Operated Valves

Consult U.S. Pipe if motor or other non-manual styles of operation are contemplated.

Body Configurations

Mechanical Joint Valves

Mechanical joint valves are furnished with outlets which conform to ANSI/AWWA C111/A21.11 mechanical joint requirements.

TYTON® Valves

TYTON® Valves are provided with push-on joint sockets. The 4-inch through 12-inch METROSEAL® TYTON® Valves can be restrained with the use of FIELD LOK® Gaskets when used with Ductile Iron pipe. FIELD LOK® Gaskets are rated for 250 psi operating pressure. U.S. Pipe's FIELD LOK® Gasket product brochure is available for more complete information. METROSEAL® TYTON® Valves are now available for the 16-inch size.

Flanged Valves

Flanged valves are furnished with ANSI/ AWWA C 115 /A21.15 standard flange drilling. These flanges are rated for 250 psi operating pressures and have the same drilling as ASME B16.1 Class 125 flanges. ANSI/AWWA Standards recommend the use of 1/8" thick rubber gaskets, and the use of other gasket materials/ thicknesses should be cleared with U.S. Pipe.

U.S. Pipe's FLANGE-TYTE® Gaskets, rated for 250 psi operating pressures, are recommended for use with flanged valves. Please refer to US. Pipe's FLANGE-TYTE® Gasket product brochure for more complete information on this gasket.

TR FLEX Restrained Joint Valves

These are available in 16 " size only and are made with TR FLEX® Sockets on each end. Please refer to US. Pipe's 1992 *TR FLEX® Restrained joint Pipe and Fittings Catalog* for additional information regarding this joint.

Tapping Valves

Tapping valves are furnished with either a push-on or mechanical joint outlet on one end and a tapping flange on the other end. The tapping flange has a raised centering face and conforms to MSS SP-60 Standard. The bell of the opposite end, whether mechanical joint or push-on, is machined to assure proper

axial alignment of the valve for the tapping machine. All valve waterways are full opening to admit a full size shell cutter.

Unless otherwise specified, tapping valves are furnished with corrosion resistant bolts and nuts along with a special 1/8" thick rubber gasket to seal between the tapping flange and the tapping sleeve. Users should not substitute other types of flange gaskets in place of those furnished with the valve.

The 16-inch horizontal tapping valve is provided with stud bolts as needed to assure nut clearance between the valve body and the tapping sleeve flange.

Valves with a Combination of Ends

METROSEAL® 250 Valves can be furnished in the mechanical joint x flanged configuration. TYTON® Valves (4-inch through 12-inch) can also be furnished in the TYTON® by Flanged Valve configuration. *These valves are not recuse as tapping valves since the absence of a raised centering face may allow misalignment between the tapping sleeve and the tapping valve which may result in damage to the valve or sleeve.*

OPERATION AND USE

The "Soft" Seating

It is recommended that first time users of a resilient-seated gate valve "get the feel" of closing the valve by fully opening and closing the valve through several cycles. The seating of the rubber seals on the gate is "softer" than the sealing of the metal seats on a double disc gate valve.

Turns to Open

The minimum number of turns to open and close valves is prescribed by the AWWA valve standards C500 and C509. The METROSEAL® 250 Valve conforms to these standards; thus, the number of turns required to operate the METROSEAL® 250 Valve is consistent with gate valves currently in service throughout the United States.

Operating Torques

Low Friction Components

Ease of operation is rightfully a major concern of those who operate valves, and this was a major objective of the METROSEAL® 250 valve designers. The use of low friction thermoplastic gate guides and thrust washers, coupled with the CAD-CAM design, all work together to produce a valve that is truly one-man operable-even the 16-inch size.

One Man Operable

The torque required to operate the METROSEAL® 250 Valve depends on the valve diameter, the operating pressure, and the flow through the valve. The largest valve, the 16inch, requires only approximately 200 ft-lbs torque to close at 250 psi pressure. Because of our design, this torque is comparable to what is required to close some of our competitors' *smaller diameter* resilient seated gate valves.

Certified Test Results

The pressure, cycle and torque tests for each diameter of the METROSEAL® 250 Valve were witnessed by Pittsburgh Inspection Services (formerly Pittsburgh Testing Laboratory). Copies of the certified test reports are available from our marketing representatives.

Excessive Torques

METROSEAL® 250 Valves will withstand, on both opening and closing, well over twice the input torque stated in Section 3.1 of AWWA C509-87 without damage or distortion to any part. Excessive torques can bend the valve stem or damage other bronze internal parts of the valve.

SERVICE APPLICATIONS

Underground (Buried) Service

The most common application for the METROSEAL® 250 Valve is in buried service for underground water and sewer lines. While the greatest use is for full open/full shut applications, the valve is also suitable for throttling service.

For buried service a NRS (Non-Rising Stem) valve, nut-operated, is normally specified. The valve is operable through a valve box with the use of a standard valve wrench which engages the 2-inch square operating nut.

For underground service, either mechanical joint or TYTON® Valves are recommended. These valve configurations have rubber gasketed sockets which conform to ANSI/AWWA C 111 /A21.11. Mechanical joint valves can be furnished with US. Pipe's MJ GRIPPER! Glands for joint restraint rating of 350 psi. TYTON® Valves 4" through 12" size can be furnished with FIELD LOP Gaskets for a joint restraint rating of 250 psi. 16" valves can furnished with TR FLEX® Sockets. These provide compatible joint restraint when used in connection with TR FLEX® Pipe and fittings.

Flanged joints, except for special uses such as with a tapping sleeve and valve, or hydrant auxiliary valve, should not be used underground. The flanged joint cannot accommodate soil shifting and settlement, which may put unacceptable stresses on pipeline components. (Rigid underground joints and components should be supported by external blocking or other means.)

Aboveground (Exposed) Service

Aboveground valves are operated more frequently than those in buried service. NRS valves are the most commonly used. OS&Y handwheel operated valves are chosen for this service when it is necessary to see at a glance whether the valve is open or shut. In addition, aboveground valves are commonly provided with flanged outlets for use in flanged piping systems.

Abrasive Flow Service

Even though NRS METROSEAL® 250 Valves have been successfully used in abrasive flow conditions, OS&Y valves are preferred since the stem is smooth inside the valve, and the threaded portion of the stem is outside. The stem is "wiped clean" each time the valve is operated.

The PERMAFUSE® Epoxy coating and the rubber encapsulation have exhibited excellent resistance to abrasives which may be encountered in normal water and sewerage systems.

Abrasive Environment Service

For service in abrasive atmosphere or environments, the NRS valve should be used since the threaded portion of the stem is not exposed outside the valve. The patented cartridge stem seal also serves as a dust seal on this valve.

Horizontal Service

METROSEAL® 250 Valves have been cycle tested and will operate equally well in the vertical, horizontal and flat positions with no significant difference in performance.

If sediments are present, the valve should be installed such that the valve bonnet does not create a pocket that could trap sediments. Contact U.S. Pipe for recommendations regarding questionable installations.

Throttling Service

The METROSEAL® 250 Valve has been successfully used for throttling service. Field installations and exhaustive testing have shown that the chatter, vibration, or wear normally associated with gate valves in such service is not experienced with the METROSEAL® 250 Valve.

Fire Protection Service

METROSEAL® 250 Valves are available listed by Underwriters Laboratories, Inc., in sizes 4"-12" for working pressures 175 or 250 psi; 16" valves are rated at 150 or 200 psi.

METROSEAL® 250 Valves are available approved by Factory Mutual Research Corporation for 250 psi in all sizes 4"-16".

All of these listings cover both NRS and OS&Y pattern valves.

Standard AWWA valves are not UL/FM rated. UL/FM valves must be special ordered.

MAINTENANCE, REPAIR, AND STORAGE

Routine Maintenance Is Normally Not Required

Because of the simple and rugged nature of the METROSEAL® 250 Valve, virtually no maintenance is required. Whether the valve is frequently operated or not operated for many years makes little difference-the valve is designed to function when required.

Routine Cycling Not Required

With double disc gate valves, it is a common practice to "cycle" the valve through a series of short strokes to remove products of corrosion from the path of the gates and seating surfaces of the valve. This is not necessary with the METROSEAL® 250 Valve since corrosion products cannot readily form on or bond to the rubber surface of the gate or the PERMAFUSE® Epoxy coating.

Replacement of Body Bonnet Assembly

Assuming a valve is damaged while in service, the simplest and quickest method of repair is to replace the bonnet assembly of the damaged valve with an assembly from a spare METROSEAL® 250 Valve. A bonnet assembly consists of all assembled valve parts except the body. Pipeline should be depressurized. De-watering the line may not be necessary. Loosen the body/bonnet bolts and assure that there is no pressure in the valve bonnet before removing the nuts. Remove the assembly and replace with a spare assembly (with gate in open position), and service is restored. The damaged bonnet assembly can then be brought back to the shop for further examination or repair.

Spare Parts

If for some reason the valve suffers physical damage, replacement parts can be ordered with the aid of the parts list.

Storage

The valve should be stored indoors in the upright position. METROSEAL® 250 Valves are produced with pads on the outlet ends so that the valve can stand upright. Rain water should not be allowed to collect in valves in storage: The accumulation of rain water in the valve and subsequent freezing can loosen or break the body/bonnet bolts or cause other damage to the valve. Outdoor storage and exposure to sunlight will dull the gloss on the PERMAFUSE® Epoxy coating. This affects the appearance but otherwise does not damage the quality of the PERMAFUSE® Epoxy coating.

INSTRUCTIONS FOR ORDERING AND INSPECTION

Directions for Ordering:
The following information should be specified on orders by the purchaser:

Order Instructions

1. The Quantity Required.
2. The Size or Outlet Diameter.
3. Body Configuration.

FIG. #	BODY CONFIGURATION
5460	MJ
5260	MJ x Flanged (non tap)
5860	MJ x Flange Tap
5150	Flanged
5080	Push-On (TYTON Valve)
5160	TR FLEX' (16 " only)
5220	Push-On x Flanged
5940	Push-On x Flange Tap
5120	Flanged OS&Y

4. Stem Configuration
Either NRS (Non-Rising Stem) or OS&Y (Out side Screw and Yoke). Standard stems are manganese bronze. "Low zinc" bronze stems are available on special order where water may cause dezincification.

5. Operating Nut or Handwheel
NRS valves are furnished with a 2-inch square operating nut for underground service unless otherwise specified. OS&Y valves are furnished with a handwheel for aboveground service unless otherwise specified.

6. Direction to Open
Valves are furnished "Open Left" (counter clockwise). "Open Right" (clockwise) is optional. Red operating nuts indicate Open Right valves. Black operating nuts indicate Open Left valves. All handwheels are similarly painted, and the opening direction is cast on the rim of the handwheels.

7. Accessories

Mechanical Joint Valve Ends
Mechanical joint ends of METROSEAL® 250 Valves are furnished with glands, SBR rubber gaskets, tee-head bolts and nuts unless other wise specified. To provide joint restraint, MJ GRIPPER® Glands will be furnished when specified.

TYTON® Valve Ends
METROSEAL® TYTON® 250 Valves are furnished with TYTON® Gaskets. If joint restraint is required, give the quantity of FIELD LOK® Gaskets to be provided.

Flanged Valves
Flanged valves are furnished with FLANGE-TYTE® Gaskets when requested. Flanged valves should only be used with rubber gaskets 1/8-inch thick.

Tapping Valve Flanged End
The tapping flange of a METROSEAL® 250 Valve is furnished with bolts, nuts, and a special 1/8-inch thick rubber gasket.

TR FLEX Valve Ends
These are available on 16 " size only. They are furnished with TYTON® Gaskets.

8. Special Drilling or Taps
Specify the size and location of any special drilling and/or taps required in the bosses on the horizontal centerline of flanged valves.

9. Spare Parts
Give quantity and part number of any spare parts required from the parts list in this manual, and a full description of the valve for which the parts are intended if different from the ordered valves.

10. UL/FM Valves
METROSEAL® 250 Valves with Underwriters Laboratories (UL) listing and Factory Mutual (FM) approved must be special ordered and are so identified. UL listed valves 4"-12" carry a standard 175 psig rating or 250 psig hi pressure rating; 16" size is 175 psig standard rating or 200 psig high pressure. FM approved valves 4"-16" are all standard rated 250 psig. Request for UL or FM valves should specify listing and rating desired.

Inspection Upon Delivery

When the METROSEAL® 250 Valves are received they should be inspected for shipping damage and to assure that the parts or accessories received are as ordered. Immediately report any discrepancies or damage to the valve or valve parts by noting such damage on the delivery ticket and obtaining carrier's signature so claim can be filed. The body/bonnet bolts should be inspected for tightness.

DIMENSIONAL CHARTS

NO.	DIMENSION DESCRIPTION	NOMINAL VALVE SIZE						
		3"	4"	6"	8"	10"	12"	16"
A	Bonnet Flange Length	8-3/8	9-13/16	13	15-5/8	19-7/16	21-1/8	25-5/8
B	Handwheel Diameter	10	10	12	14	16	16	23
C	Waterway Diameter	3-1/32	4-1/32	6 1/8	8-1/16	10-1/8	12-1/8	16-1/8
D1	Mechanical Joint Bolt Circle	6-13/64	7-1/2	91/2	11-3/4	14	16-1/4	21
D2	Flanged Bolt Circle	6	7-1/2	9-112	11-3/4	14-1/4	17	21-1/4
E	Bonnet Flange Width	4-1/8	7-1/4	8-3/8	9-5/8	10-15/16	11-1/16	13-5/8
F	Face-to-Face (End-to-End) Mechanical Joint	8-1/2	9-1/4	10-1/2	11-1/2	14-1/2	15	22
	Flanged. Face-to-Face	8	9	10-1/2	11-1/2	13	14	17
	Mechanical Joint X Flanged & Mechanical Joint X Flanged Tapping	8-1/2	9-3/32	10-3/4	12-1/2	13-3/4	14-1/2	19-1/2
	TYTON® Valve	N/A	11	12-3/8	14	14-3/8	14-7/8	23
	TYTON® X Flanged Valve & TYTON® X Flanged Tapping Valve	N/A	10-5/16	11-7/16	13-1/16	14	14-3/4	N/A
G	Flange Diameter	7-1/2	9	11	13-1/2	16	19	23-1/2
H	Tapping Flange Lip Diameter	3-63/64	4-63/64	6-63/64	8-63/64	10-63/64	12-63/64	16-15/16
J	Tapping Flange Lip Height	3/16	3/16	1/4	1/4	1/4	1/4	1/4
K	Body-Bonnet Flange to Centerline of Waterway	5-27/32	6-5/16	8-19/32	11-1/4	13-1/4	15-11/16	19-11/16
L	Top of NRS Nut or Handwheel to Center of Waterway	10-1/2	12-13/16	16-1/4	19-3/16	24-1/2	27-5/16	34-3/8
M	Top of OS&Y Stem to Centerline of Waterway Valve Closed	N/A	18-13/16	25-5/16	30-1/8	38-3/4	41-5/8	55-1/8
	Valve Open	N/A	23-3/8	32-16	38-3/4	49-1/2	53-7/8	71-3/8
N	Number of Turns to Open (NRS & OS&Y)	131/4	13	19	25	32	37	50
P	Maximum Tap Size (Optional)	1/2	1/2	3/4	¾	1	1	1
S	Depth of Socket Mechanical Joint Socket	2-1/2	2-1/2	2-1/2	2-1/2	2-1/2	2-1/2	3-5/8
	TYTON® Valve Socket	N/A	3-1/2	3-1/2	3-3/4	3 -7/8	3-7/8	5

#5860 Mechanical Joint x Flange Tapping Valve

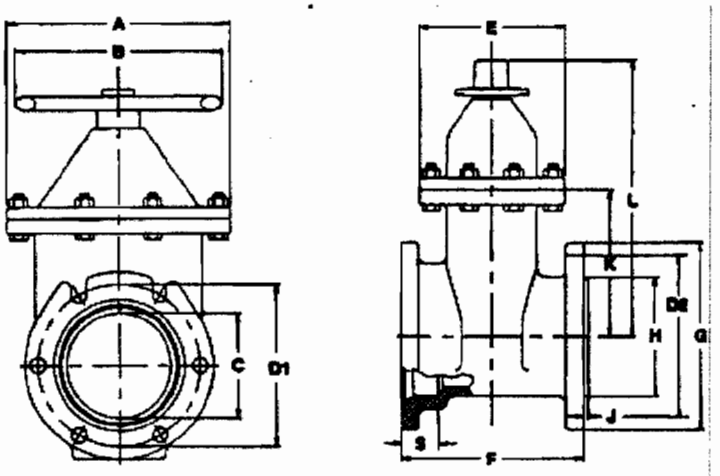

#5940 TYTON x Flange Tapping Valve

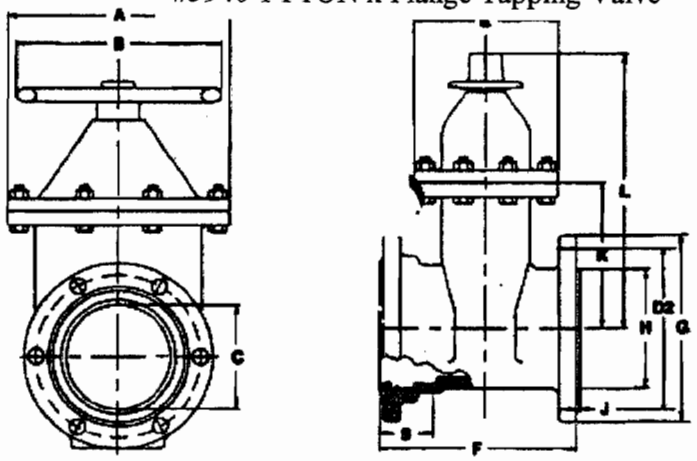

#5150 Flange x Flange Valve

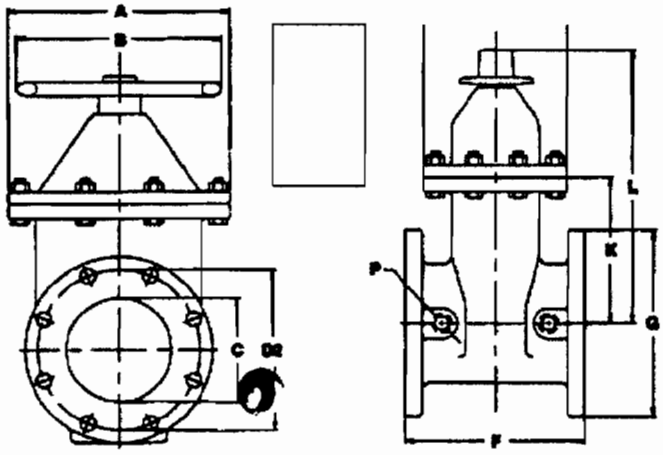

#5460 Mechanical Joint x Mechanical Joint Valve

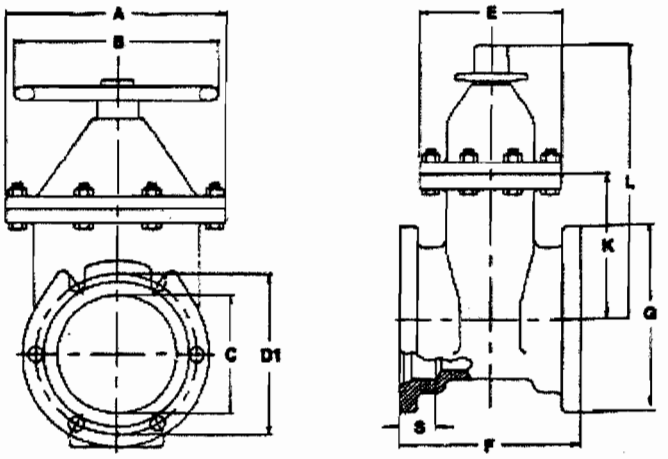

#5080 TYTON® x TYTON® Valve

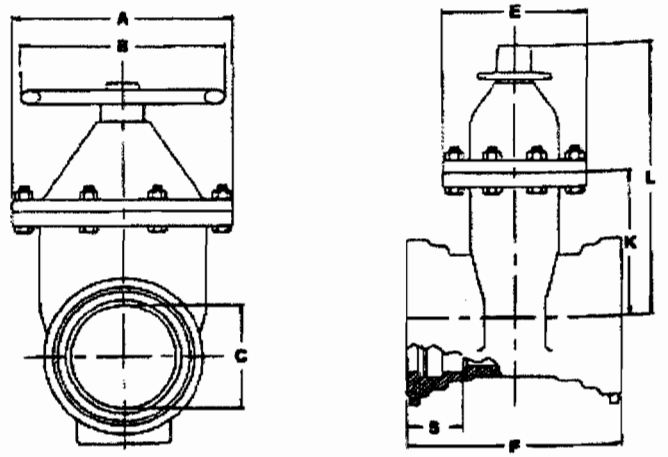

#5120 Flange x Flange OS&Y Valve
(Other ends available on OS&Y)

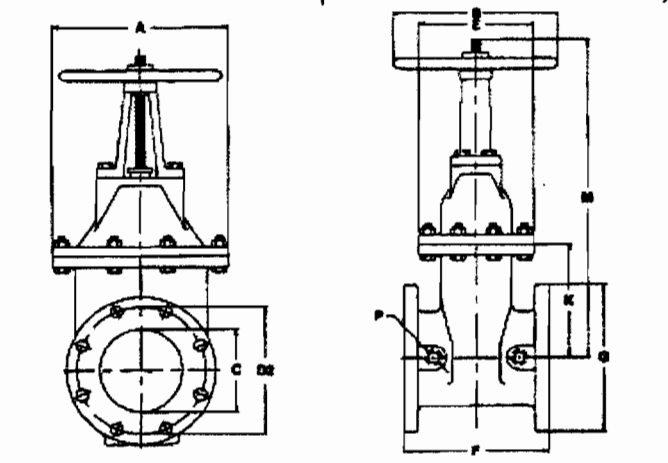

Note: Mechanical joints are shown with vertical bolt slots. Valves may also be furnished with horizontal bolt slots.

PARTS LIST

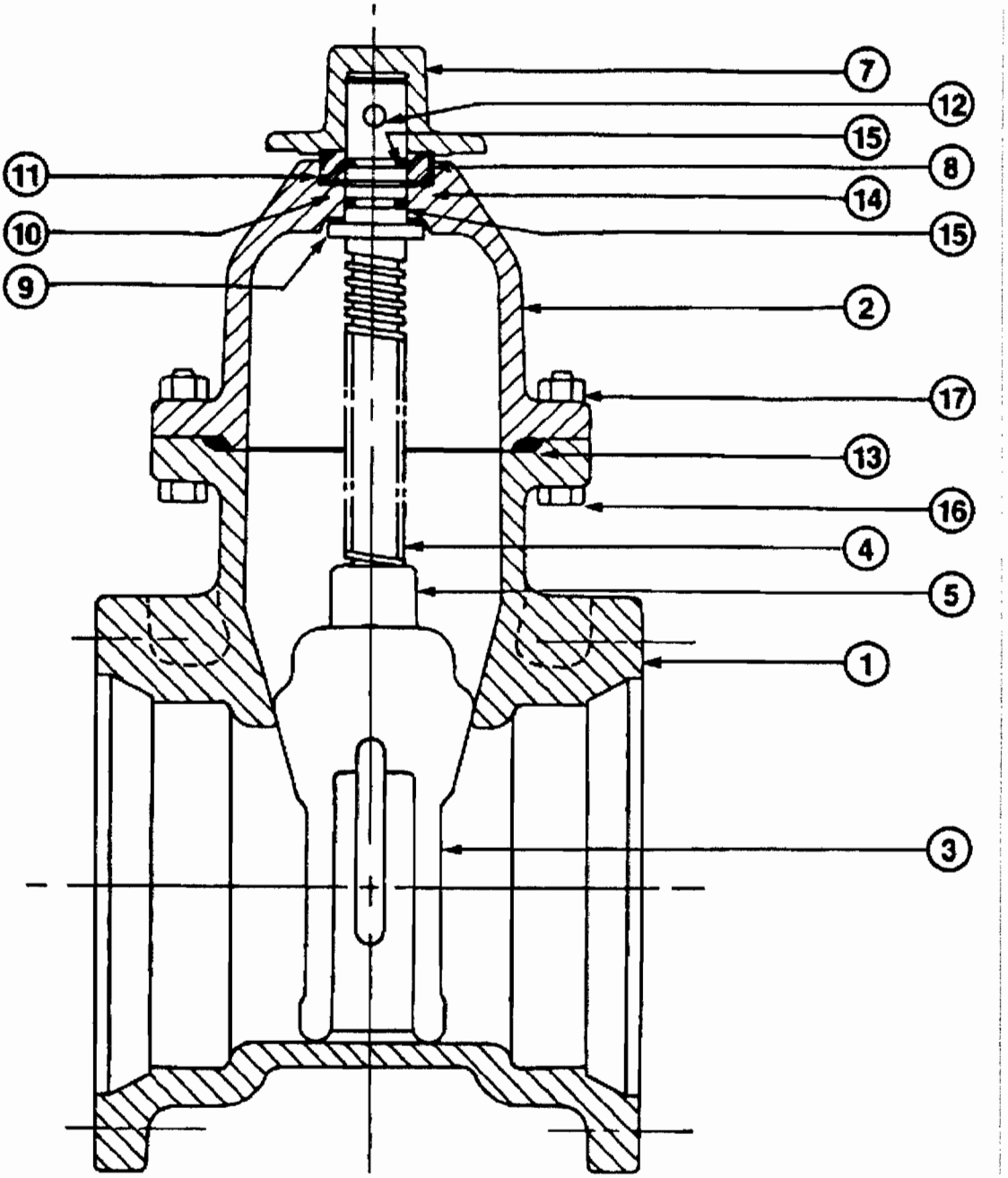

NON-RISING STEM

No.	NAME OF PART	No. reqd.	MATERIAL
1	BODY	1	DUCTILE IRON
2	BONNET	1	DUCTILE IRON
3	GATE, RUBBER COVERED	1	DUCTILE IRON*
4	STEM	1	BRONZE
5	STEM NUT	1	BRONZE
7	OPERATING NUT	1	GRAY IRON
8	CARTRIDGE	1	THERMOPLASTIC
9	BONNET THRUST WASHER	1	THERMOPLASTIC

No.	NAME OF PART	No. reqd.	MATERIAL
10	RETAINER RING	1	THERMOPLASTIC
11	DIRT SEAL	1	RUBBER
12	PIN, OPERATING NUT	1	STEEL
13	SEAL RING	1	RUBBER
14	"O" RING (CARTRIDGE)	1	RUBBER
15	"O" RING (STEM)	2	RUBBER
16	BOLT, HEX HEAD		STEEL
17	NUT, HEX		STEEL

*3" gates are bronze.

Milherst Construction, Inc.
P.O. Box 631
Getzville, New York 14068

Phone (716) 688-9098
Fax (716) 688-9562

Submittal No. 12

Lehigh Valley RR Derailment Site

Owner NYS Department of Environmental Conservation
Bureau of Construction Services, 12th Floor
625 Broadway
Albany, NY 12233-7013

Contractor Milherst Construction, Inc
Date 12/18/01

Item: Valve Box

Specification:

Section: 02660
Page No.: 02660 - 3
Para. No.: 2.03
Drawing No.: G-29
Location: All valve locations

I hereby certify that review, verification of products required, field dimentions, adjacent construction work and coordination of information, is in compliance with the requirements of the work and contract documents.

Approved By: Charles T. Kubinec

☐ **APPROVED**

☐ **APPROVED AS CORRECTED**
(Resubmit final copy for file)

☒ **REVISE AND RESUBMIT BEFORE PROCEEDING**

☐ **NOT APPROVED**

Review only for conformance with the design concept of the project and with information given in the Contract Documents. The Contractor is responsible for: verifying that dimensions are confirmed and correlated at the job site; obtaining information that pertains to the fabrication processes or to techniques of construction, and: coordinating the work of all subcontractors.
STEARNS & WHELER, LLC Engineers and Scientists

By TJF **Date** 12/28/01

1. The word "water" shall be cast into the cover
2. Must be coated with a petroleum - asphaltic material
3. Minimum cover of pipe ranges from 60" to 72". The box you specified only extends to 58"

5 1/4" VALVE BOX

3 PC. SCREW STYLE

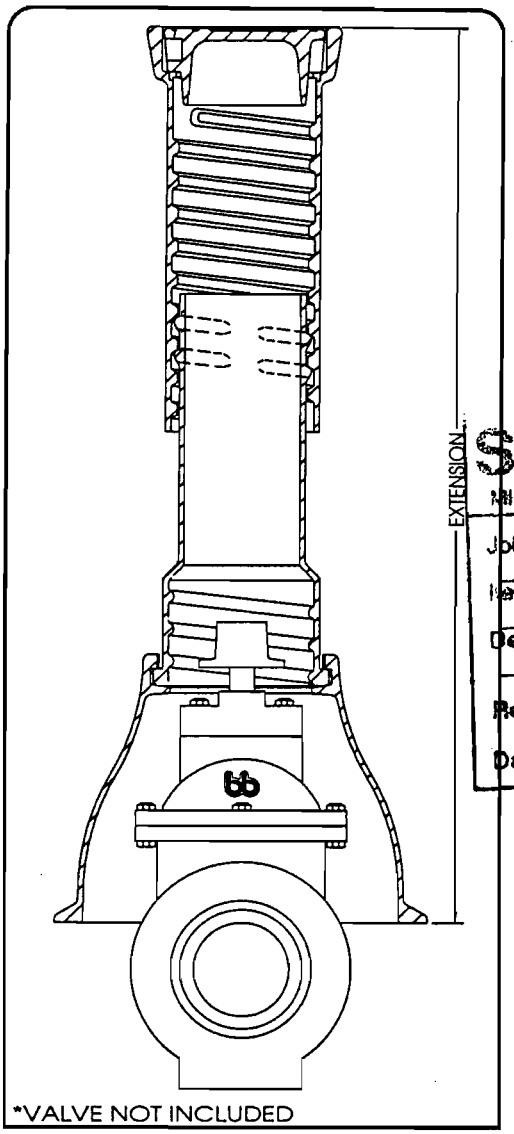

2 PC. SCREW STYLE

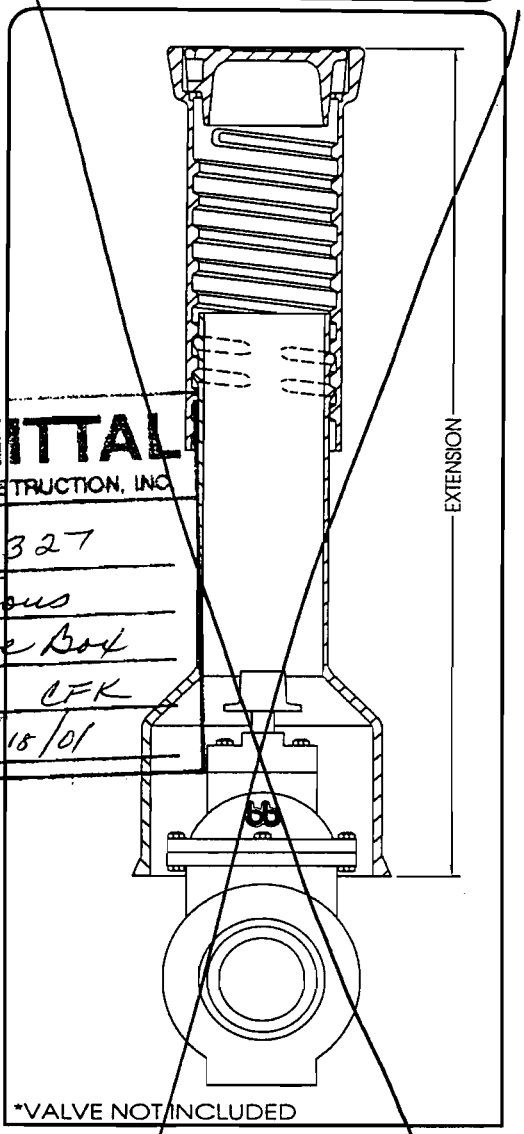

SUBMITTAL
MILLNERST CONSTRUCTION, INC.
Job: D004327
Item: Various
Descr: Valve Box
Reviewed By: CFK
Date: 12/18/01

VALVE BOX COMPLETE

CODE	EXTENSION (IN.)	Weight (Lb)	FIG #
V615	22-31	95	AA
V616	32-43	112	A
V617	38-49	118	B
V618	44-55	122	C
V619	47-58	128	CC
V620	44-65	141	D
V622	48-68	147	E
V627[1]	61-81	173	F
V626[1]	73-94	183	G

NOTE:BOX SHIPPED WITH WATER COVER & No.6 BASE UNLESS OTHERWISE SPECIFIED.

1 NOTE:EXTENSION SUPPLIED TO MAKE THESE BOXES.

VALVE BOX COMPLETE

CODE	EXTENSION (IN.)	Weight (Lb)	FIG #
V649	26-37	80	#20
V650	38-49	99	#21
V651	32-53	108	#21A
V652	38-59	118	#22
V653[1]	52-73	132	#23
V654[1]	64-85	151	#24

NOTE:"WATER" COVER SHIPPED UNLESS OTHER SPECIFIED.

1 NOTE:EXTENSION SUPPLIED TO MAKE THESE BOXES.

Milherst Construction, Inc.
P.O. Box 631
Getzville, New York 14068

Phone (716) 688-9098
Fax (716) 688-9562

Submittal No.12-Rev.1

Lehigh Valley RR Derailment Site

Owner NYS Department of Environmental Conservation
Bureau of Construction Services, 12th Floor
625 Broadway
Albany, NY 12233-7013

Contractor Milherst Construction, Inc
Date January 17, 2002

Item: Valve Box & Cover for Line Valves

Specification:

Section: 02660
Page No.: 02660-3
Para. No.: 2.03
Drawing No.: G-29
Location: All Line Valves

Milherst Construction, Inc. certifies that all quantities, dimensions, specified performance criteria, installation requirements, materials, catalog numbers, and similar data with respect thereto have been reviewed or that each Shop Drawing or sample has been coordinated with other Shop Drawings and samples and with the requirements of the Work and Contract Documents.

By: Charles F. Kubiniec.

Charles F. Kubiniec
Project Manager

☐ **APPROVED**

☒ **APPROVED AS CORRECTED**
~~**(Resubmit final copy for file)**~~

☐ **REVISE AND RESUBMIT BEFORE PROCEEDING**

☐ **NOT APPROVED**

Review only for conformance with the design concept of the project and with information given in the Contract Documents The Contractor is responsible for: verifying that dimensions are confirmed and correlated at the job site; obtaining information that pertains to the fabrication processes or to techniques of construction, and: coordinating the work of all subcontractors.
STEARNS & WHELER, LLC Engineers and Scientists

By JRP Date 1/24/2

1) Valve Boxes and Covers shall be coated with a petroleum-based asphaltic material

5 1/4" SHAFT 3-PIECE VALVE BOXES

MILHERST CONSTRUCTION INC.
Submittal 12 - Revision 1 1-17-02

FIG. NO. 4906, 4907

3 PIECE SCREW AND SLIDING TYPE VALVE BOXES

- These Valve Boxes are designed to cover the Valve completely. See page 10.
- The Top Section screws or slides over the Middle Section to provide adjustment. The Middle section locks into the Base Section
- The No. 6 Base is the Standard Base used to determine lengths shown in Table on page 10. All pricing considers the No. 6 Base only. Other Bases will reflect a change in complete Box price and total length.
- See Page 9 for Paving Adapters to raise our Valve Boxes.
- Locking covers available.
- Square Screw Type Top available in 15" and 26 1/2" length. Please Inquire.

Table for Ordering. Dimensions in Inches—Weight in Pounds

Size No.	Extension Range—A	Top Section & Cover No.	Dim. B	Wt.	Middle Section No.	Dim. C	Wt.	No. 6 Base Wt.	Total Wt.
AAA	17" Stat.	57	6.0	32.5				45.0	77.5
AA	22-26	54	10.5	35.0	60	10.5	14.0	45.0	94.0
A	28-40	55	15.5	42.0	61	16.0	23.0	45.0	110.0
B	36-48	55	15.5	42.0	62	24.0	31.5	45.0	118.5
C	42-54	55	15.5	42.0	63	30.0	36.5	45.0	123.5
CC	48-60	55	15.5	42.0	64	36.0	46.0	45.0	133.0
D	42-66	56	26.5	70.0	63	30.0	36.5	45.0	138.5
E	48-72	56	26.5	70.0	64	36.0	46.0	45.0	148.0

Longer boxes can be furnished by adding Extensions.
Cover Weight — 13 pounds. See Table on Page 10 for lengths and sizes. 72"

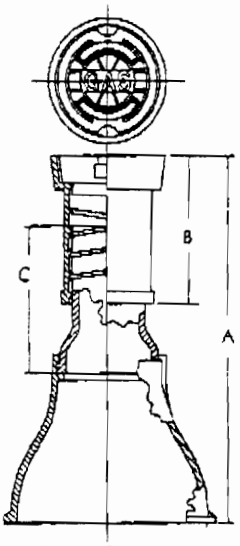

FIG. NO. 4906
SCREW TYPE

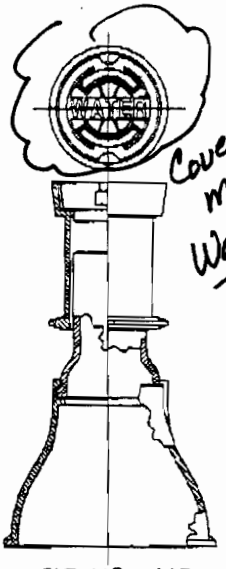

FIG. NO. 4907
SLIDING TYPE

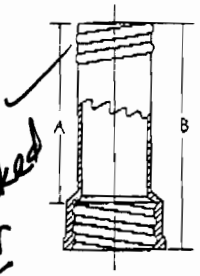

FIG. NO. 4905-X
SCREW TYPE

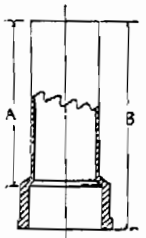

FIG. NO. 4906-X
SLIDING TYPE

FIG. NO. 4905-X **SCREW EXTENSION**

Size No.	Increases Length — A	Overall Length — B	Weight
57	9.0	13.0	20.0
58	14.0	18.0	23.0
59	20.0	24.0	31.5
60	24.0	30.0	36.5
61	30.0	36.0	46.0

FIG. NO. 4906-X **SLIDING EXTENSION**

63-E	9.0	13.0	20.0
64-E	14.0	18.0	23.0
65-E	20.0	24.0	31.5
66-E	24.0	30.0	36.5
67-E	30.0	36.0	46.0

OPTIONAL BASES

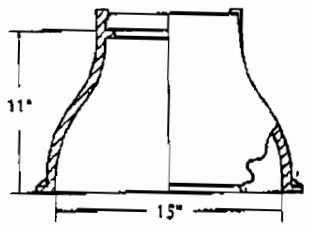

FIG. NO. 4909-A

NO. 6 ROUND BASE

- For Valves 8" and smaller.
- Base is Standard used to arrive at Extensions used here and in table on page 9.
- Weight — 45 pounds.

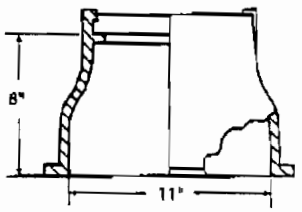

FIG. NO. 4909-B

NO. 4 DOME BASE

- For Valves 4" and smaller.
- Overall length of Valve Box in Table will be 3" less.
- Weight — 30 pounds.

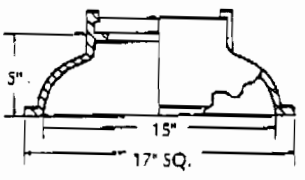

FIG. NO. 4909-C

NO. 140 ROUND BASE

- 17" Square Flange for Valves near surface & up to 24".
- Overall length of Valve Box in Table will be 6" less.
- Weight — 30 pounds.

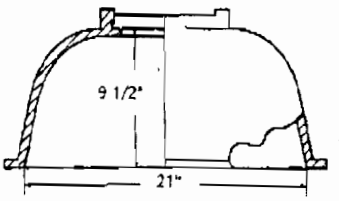

FIG. NO. 4909-D

NO. 160 OVAL BASE

- For Valves 16" and smaller.
- Overall length of Valve Box in Table will be 1 1/2" less.
- Weight — 56 pounds.

NO. 8 ROUND BASE

FIG. NO. 4909-E (NOT SHOWN)

- For 12" Valves & smaller.
- Weight—50 pound.
- Same as No. 6 only 12" high & 17" I.D. at bottom.

2356156 P.02
MJ PIPE
JAN-16-2002 11:17

Milherst Construction, Inc.
P.O. Box 631
Getzville, New York 14068

Phone (716) 688-9098
Fax (716) 688-9562

Submittal No. 13

Lehigh Valley RR Derailment Site

Owner NYS Department of Environmental Conservation
Bureau of Construction Services, 12th Floor
625 Broadway
Albany, NY 12233-7013

Contractor Milherst Construction, Inc
Date 12/18/01

Item: Fire hydrant

Specification:

Section: 02655
Page No.: 02655 - 2
Para. No.: 2.01
Drawing No.: G-29
Location: Continuous on project

I hereby certify that review, verification of products required, field dimentions, adjacent construction work and coordination of information, is in compliance with the requirements of the work and contract documents.

Approved By: Charles F. Kubinec

☒ APPROVED

☐ [illegible] AS CORRECTED
(Resubmit final copy for file)

☐ RETURN AND RESUBMIT BEFORE PROCEEDING

☐ NOT APPROVED

Review only for conformance with the design concept of the project and with information given in the Contract Documents. The Contractor is responsible for: verifying that dimensions are confirmed and correlated at the job site; obtaining information that pertains to the fabrication processes or to techniques of construction, and; coordinating the work of all subcontractors.
STEARNS & WHEELER, LLC Engineers and Scientists

By JJF Date 12/28/01

Note: See submittal No. 15 for hydrant requirements

THE U.S. PIPE METROPOLITAN™ 250
MODEL 94 - FIRE HYDRANT

U. S. Pipe and Foundry Co.

SUBMITTED
MILHEAST CONSTRUCTION, INC.
Job: D 004327
Item: Various
Descr: fire hydrants
Reviewed By: CFK
Date: 12/18/01

THE U.S. PIPE METROPOLITAN[IM] 250-MODEL 94 - FIRE HYDRANT

The Model 94 is a logical addition to our Metropolitan 250 family of fire hydrants. It brings you all the advantages of the Met 250 plus:

A bronze upper valve plate with urethane drain valve facings.

2. A new travel stop feature to provides positive feel when the hydrant is completely open.

3 The complete main valve mechanism has been reworked for improved flow characteristics and less chance of damage due to rock entrapment

Ductile Iron operating nut with weather shield weatherproofs the hydrant. Ductile Iron for durability and wear resistance. Tamper resistant alloy steel locking pin fastens the operating nut to the stem nut.

Bronze hold down nut is totally enclosed by skirt of weathershield and is locked to bonnet for extra security. O-ring sealed for added protection.

Stop nut provides a positive halt to movement of valve stem in opening. The rod cannot be placed in compression if the hydrant is "over opened".

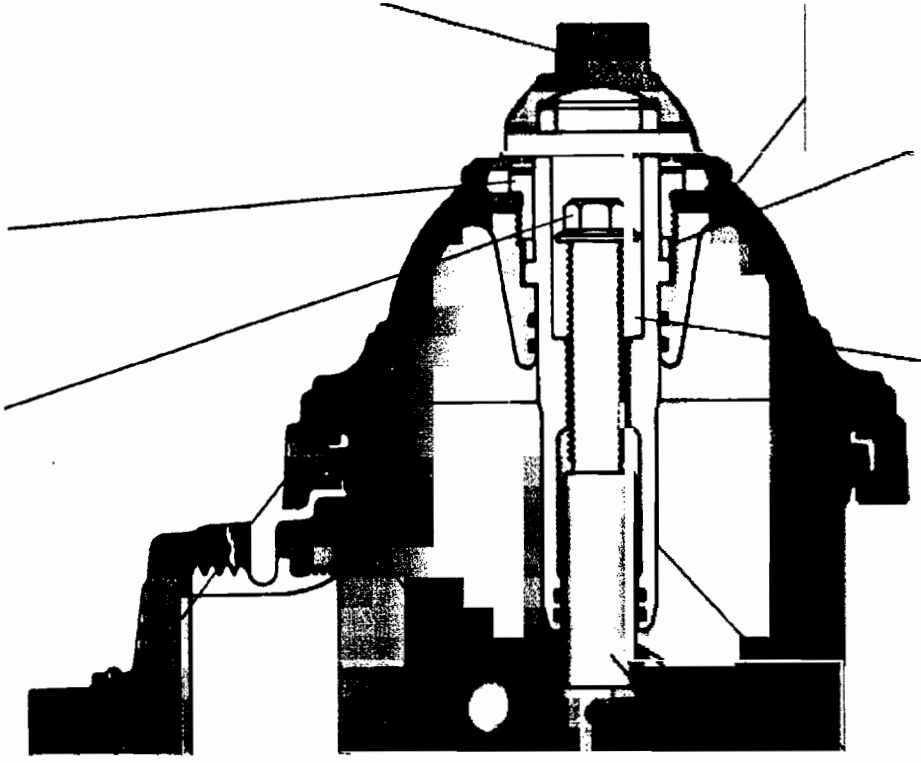

,Ductile Iron bonnet is securely fastened to upper barrel with inter-locking "breech lock" lugs for tamper resistance. Easily removed for access to main valve.

Anti-friction bearing assures easy operation by reducing friction. Made of tough, reliable Delrin® plastic for permanence and strength.

Lifetime lubrication- Grease chamber filled with all-temperature grease assures positive lubrication each time the hydrant is operated.

Bonnet locking screw is tamper resistant, assuring security of bonnet by preventing rotation of bonnet.

Non-kinking chainHeavy duty, rust-proofed chains are secured to caps with a crimped ring which allows free turning of the cap. The hydrant can be ordered without chains.

Ductile Iron nozzle section is superior to gray iron in resisting traffic impact damage.

Ductile Iron lower barrel is centrifugally cast Ductile Iron pipe. Extra thick so the minimum thickness at the two connecting grooves exceeds total barrel thickness required by AWWA C502. Ductile Iron lower barrel resists the kind of impact damage that will break an ordinary gray iron flanged lower barrel. All deep bury hydrants have stronger one piece lower barrels (up to 18' 0" bury).

Upper valve plate is all bronze construction with urethane rubber drain valve facings.

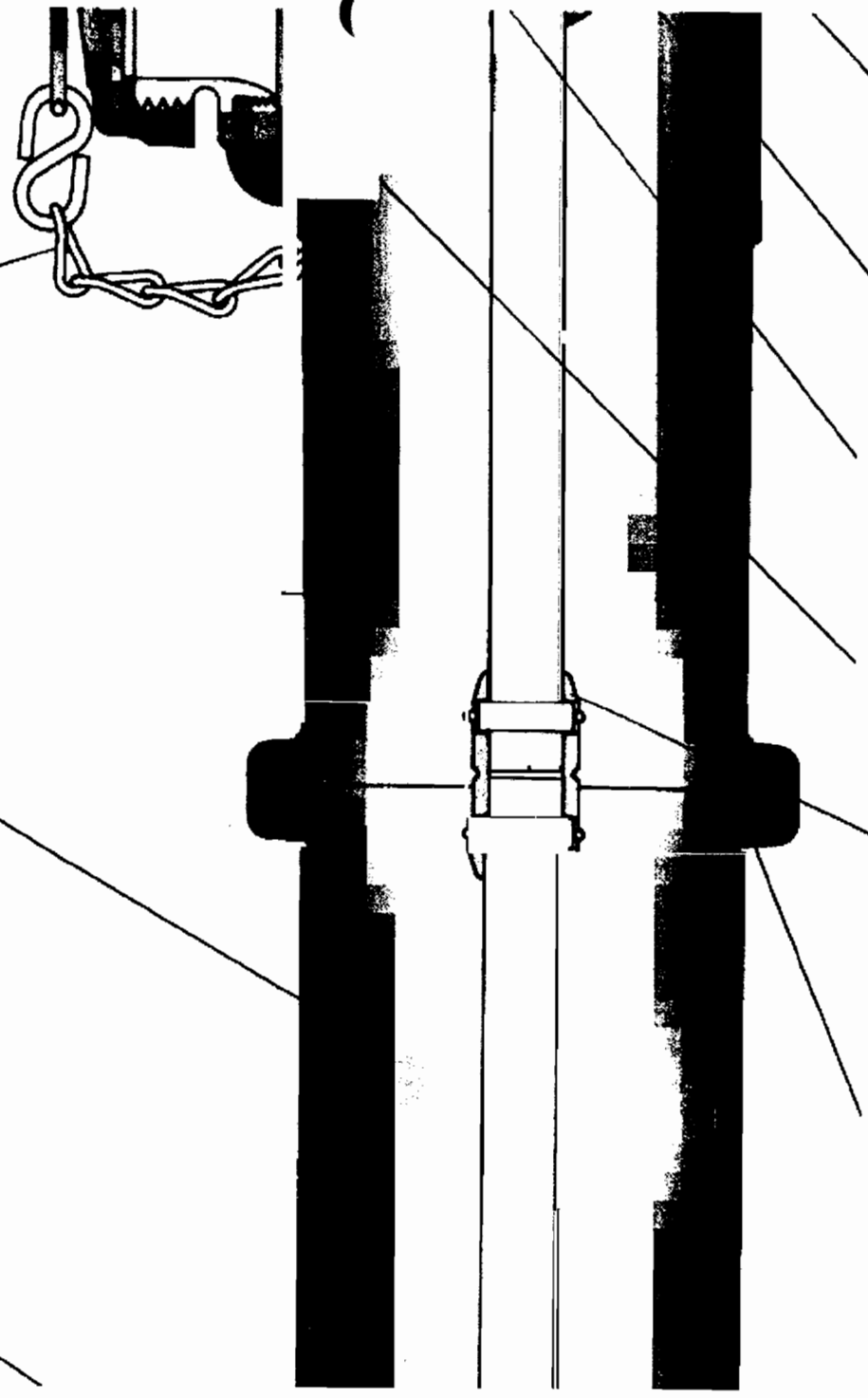

Bronze stem nut is the direct connection between operating nut and stem threads. True dry-top design is double o-ring sealed.

Bronze stem sheath provides smooth bronze-to-bronze noncorrodible sealing surface for reliable, positive sealing by o-rings.

Streamlined curves-Both nozzle section and nozzles have sweeping curves to provide maximum flow and minimum head loss.

Threaded-in nozzles are o-ring sealed and mechanically secured with nozzle locks.

Stem coupling-In traffic impact, the precision groove assures clean breakage in two sections. The two coupling sections will stay connected to the rod ends and not drop into the bottom of the hydrant if impact occurs.

"PROTECTOP" groundline coupling-Time proven design assures reliable fracture and quick repair after traffic impact. The coupling can be easily removed to install extension section or loosened to rotate hydrant to any position after installation.

Boltless connection, between lower barrel and base is superior to a flange, because underground bolts and nuts are eliminated and no dissimilar metals are exposed to the soil. Joint includes thickened housing which holds four stainless steel locking keys to rigidly secure the entire assembly. Keys are readily removed to disassemble the joint while the hydrant base is in place.

Compression main valve opens against pressure. Tapered Ductile Iron lower valve plate prevents rubber valve distortion. Epoxy coated when specified.

Ductile Iron base is hydraulically contoured and designed for minimum turbulence and maximum full flow. Has large flat surfaces for setting and blocking. Epoxy coated when specified.

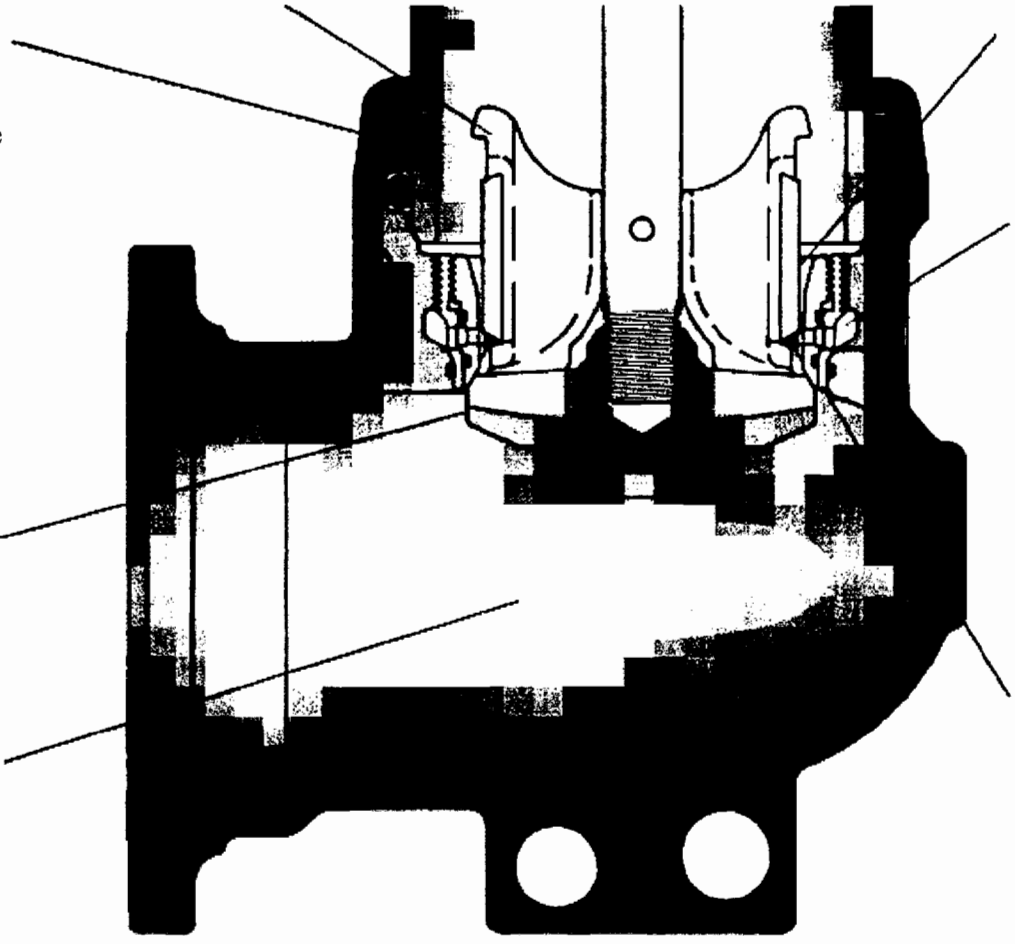

Bronze valve seat ring is designed with threads above the drains. Seat ring threads engage a bronze threaded subseat.

Bronze drain outlet-An all bronze channel is formed by the seat ring and base subseat to assure nonclogging drainway which leads to double drains in the sides of the base. Location of drain outlets at lowest possible elevation assures complete drainage of all water in the hydrant. Drains are forced flushed during opening and closing of main valve.

Bronze base subseat provides noncorrodible surface for proper sealing of seat ring o-rings. The bronze surface of the bushing allows a seat ring to be replaced with the assurance that the o-rings will seal properly because the bronze surface remains smooth and free of roughness and corrosion.

Best of all it's STILL all Ductile Iron construction, rated for 250 psi working pressure and boltless construction.

The Met-250-Model 94 meets or exceeds all requirements of AWWA C502.

It is indisputably the most easily serviced and maintained hydrant available. Now it's better.

ACCESSORIES & OPTIONS

Extension Kits*

Extension of the METROPOLITAN" 250 Model 94 Hydrant to adjust for changes in ground elevation is easily done without digging. Kit includes the barrel and rod units from 6" to 36" long in 6" increments (longer units available on special order), plus rod and barrel couplings complete with gaskets and fasteners.

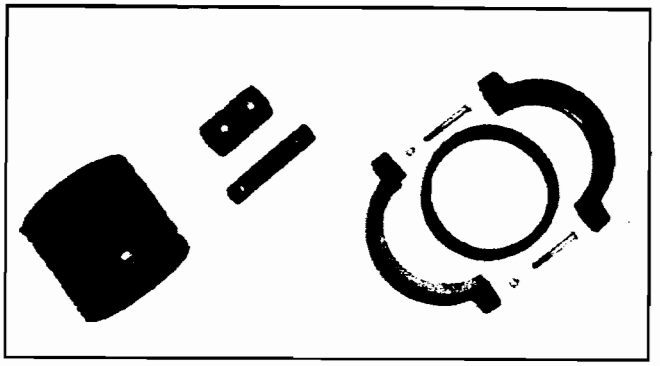

Traffic Repair Kit*

Consists of breakaway coupling for barrel and rod with gaskets and fasteners.

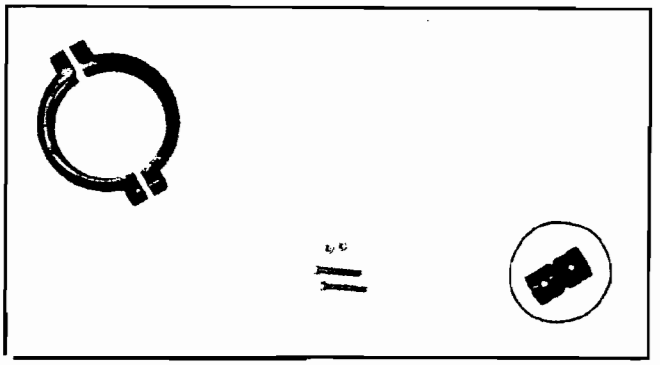

Disassembly Tool Kit

Consists of a lightweight seat removal wrench, a combination spanner and two allen wrenches. The combination spanner wrench takes the place of ·ee ordinary tools: a spanner wrench for bonnet ·emoval, a thinwall 3/4" deep socket for removing the travel stop nut and a wrench for removing the hold down nut and valve bottom plate.

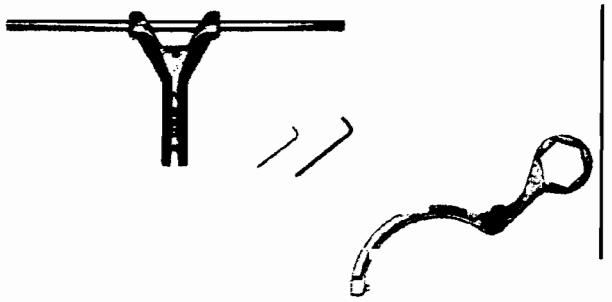

Directions for Ordering

When ordering the METROPOLITAN 250 - Model 94 Fire Hydrant, please specify the following:
1. Quantity required. 2. Size of main valve opening (51/4 or 4t/2"). 3. Number and size of nozzles. 4. Operating nut size. 5. Nozzle thread detail (NST or other). 6. Opening direction.
7. Depth of bury-distance from groundline to the bottom of the hydrant inlet (same as depth of trench).
8. Type and size of inlet connection.
9. Color code. Unless otherwise specified the hydrant will be painted fire engine red from the groundline up.

* Must specify size hydrant - 4'/z or 5'/i' valve opening.

METROPOLITAN® Fire Hydrant
Part Numbers and Descriptions

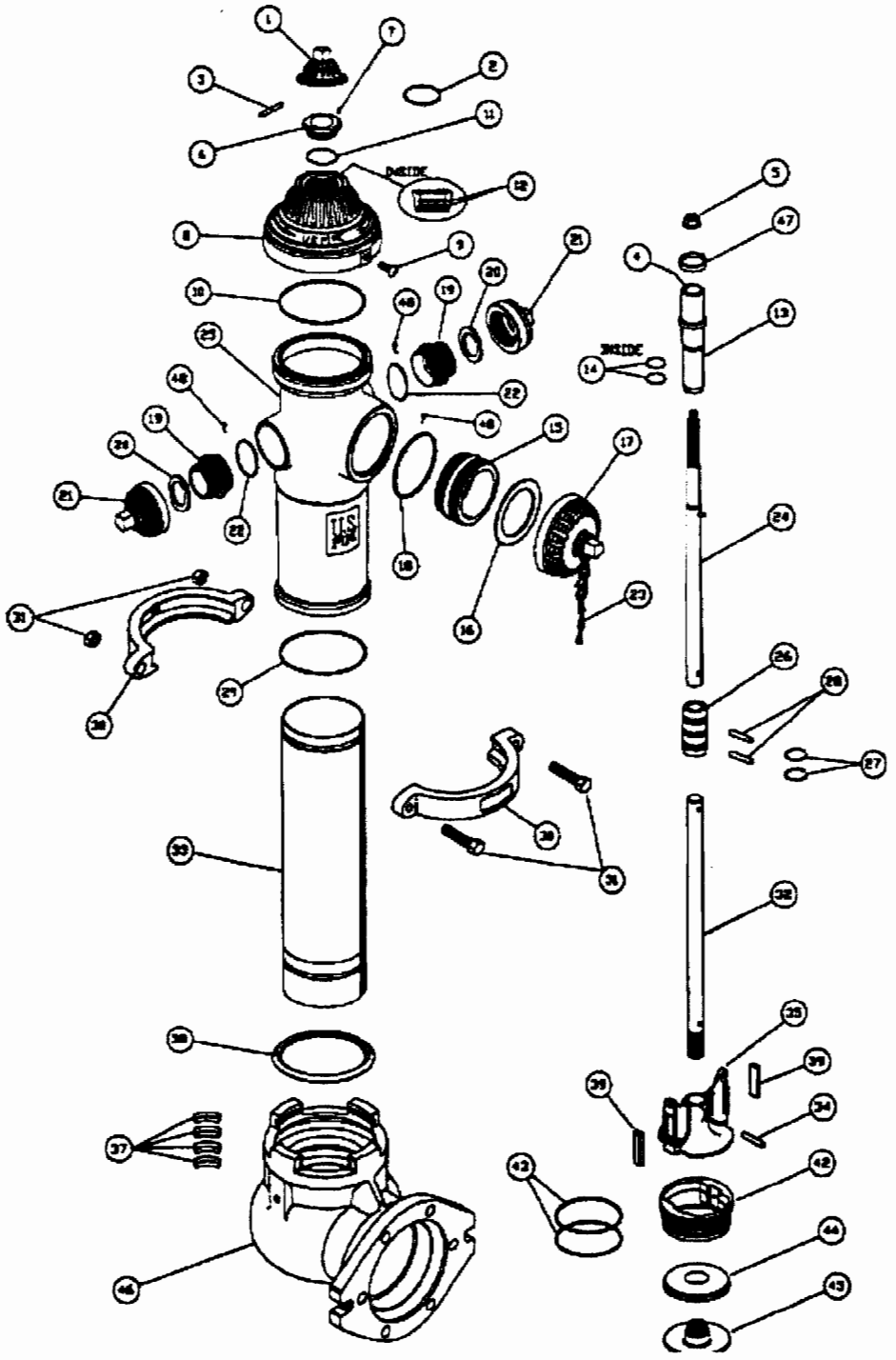

Detail of Hydrant Extension

Item #	Name of Part	Quantity Required	Material
1	Operating Nut	1	Ductile Iron
2	Operating Nut Seal	1	Rubber
3	Operating Nut Locking Pin	1	Steel
4	Lubricant (in chamber)	1	Beacon 290
5	Travel Stop Nut	1	Steel
6	Hold Down Nut	1	Bronze
7	Hold Down Nut Screw	1	Steel
8	Bonnet (Specify Direction)	1	Ductile Iron
9	Bonnet Locking Screw	1	Stainless Steel
10	Bonnet Seal	1	Rubber
11	O-Ring	1	Rubber
12	Bonnet - Revolving Nut "O" Rings	2	Rubber
13	Revolving Nut (Specify Direction)	1	Bronze
14	Inner Revolving Nut "O" Rings	2	Rubber
15	Pumper Nozzle	1	Bronze
16	Pumper Nozzle Cap Gasket	1	Rubber
17	Pumper Nozzle Cap	1	Ductile Iron
18	Pumper Nozzle Gasket	1	Rubber
19	Hose Nozzle	2	Bronze
20	Hose Nozzle Cap Gasket	2	Rubber
21	Hose Nozzle Cap	2	Ductile Iron
22	Hose Nozzle Gasket	2	Rubber
23	Chain Assembly	1	Steel
24	Rod Upper (Specify Direction)	1	Steel
	Including Sheath with UL "O" Ring	1	Bronze
	Rod Pin - Shear Proof	1	Steel
25	Standpipe Upper (Specify V.O.)	1	Ductile Iron
26	Rod Coupling (Frangible)	1	Gray Iron
27	Coupling Retaining Rings	2	Stainless Steel
28	Rod Coupling Pins	2	Stainless Steel
29	Standpipe Coupling Seal	1	Rubber
30	Standpipe Coupling Halves (Frangible)	2	Gray Iran
31	Standpipe Coupling Bolt and Nut	2	Steel
32	Valve Rod Lower (Specify Bury)	1	Steel
33	Standpipe Lower (Specify Bury)	1	Ductile Iron
34	To Plate Pin - Shear Proof	1	Steel
35	Valve To Plate (Specify V.O.)	1	Man g. Bronze
37	Elbow Locking Key	4	Stainless Steel
38	"O"-Ring Gasket	1	Rubber
39	Drain Valve Facing	2	Rubber
42	Seat Ring (Specify V.O.)	1	Bronze
43	Seat Ring "O"-Ring	2	Rubber
44	Main Valve	1	Rubber
45	Valve Bottom Plate	1	Ductile Iron
46	Elbow, Including	1	Ductile Iron
	Sub-Seat	1	Bronze
	Drain Hole Liner	2	Acrylic
47	Anti Friction Bearing	1	Delrin 500
48	Nozzle Wedge Lock	3	Bronze

Item #	Extension Kit Parts	Quantity Required	Material
51	Extension Rod C . Ass'y (Non-Frangible)	1	Ductile Iron
52	Rod Extension (Specify Length)	1	Steel
53	Extension Coupling Gasket	1	Rubber
54	Stp. Coupling Half (Non-Frangible)	2	Ductile Iron
55	Stp. Extension (Specify Length)	1	Ductile Iron
56	Extension Coupling Bolt an Nut	2	Stainless Steel

Safety Repair Kit (658665)

Includes Part No's. 26, 27, 28, 29, 30 and 31

Milherst Construction, Inc.
P.O. Box 631
Getzville, New York 14068

Phone (716) 688-9098
Fax (716) 688-9562

Submittal No. 14

Lehigh Valley RR Derailment Site

Owner NYS Department of Environmental Conservation
Bureau of Construction Services, 12th Floor
625 Broadway
Albany, NY 12233-7013

Contractor Milherst Construction, Inc
Date 12/18/01

Item: Ductile Iron Fittings

Specification:

Section: 02610
Page No.: 02610-2
Para. No.: 2.01
Drawing No.: N/A
Location: Continous along project

I hereby certify that review, verification of products required, field dimentions, adjacent construction work and coordination of information, is in compliance with the requirements of the work and contract documents.

Approved By: Charles T. Kubinec

☐ APPROVED
☐ APPROVED AS CORRECTED
(Resubmit final copy for file)
☐ REVISE AND RESUBMIT BEFORE PROCEEDING
☒ NOT APPROVED

Review only for conformance with the design concept of the project and with information given in the Contract Documents. The Contractor is responsible for: verifying that dimensions are confirmed and correlated at the job site; obtaining information that pertains to the fabrication processes or to techniques of construction, and: coordinating the work of all subcontractors.
STEARNS & WHELER, LLC Engineers and Scientists

By TJF Date 12/28/01

- Fittings shall be class 51, Compact, and Cement lined

Sub.

Tyler Pipe
Subsidiary of
Tyler Corporation

MECHANICAL JOINT SSB-DUCTILE IRON CLASS 350 FITTINGS

Sample Specification
3" through 16" Mechanical Joint Ductile Iron Fittings shall be produced in strict accordance with all applicable terms and provisions of ANSI/AWWA C153/A21.53 and ANSI/AWWA C111/A21.11 18" thru 24" diameters shall be manufacturer's standards with wall thickness equivalent to Class 56 ductile iron pipe. The working pressure rating shall be 350 PSI.

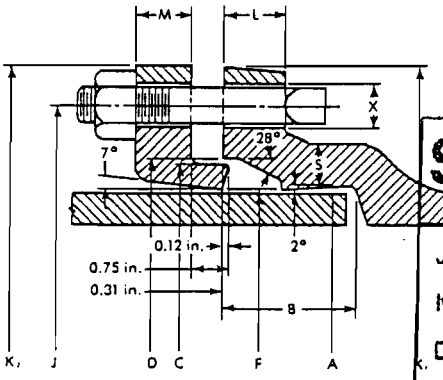

SUBMITTAL
MUNICIPAL CONSTRUCTION, INC.
Job: D004327
Item: Various
Descr: Fittings
Reviewed By: CFK
Date: 12/18/01

Joint Dimensions in Inches

Size	A Dia.	B	C Dia.	D Dia.	F Dia.	J Dia.	K_1 Dia.	K_2 Dia.	L	M	S	T	X Dia.	Bolt Size	No.
3	3.96	2.50	4.84	4.94	4.06	6.19	7.62	7.69	.59	.62	.38	.34	⅞	⅝ x 3	4
4	**4.80**	**2.50**	**5.92**	**6.02**	**4.90**	**7.50**	**9.06**	**9.12**	**.60**	**.75**	**.41**	**.35**	⅞	¾ x 3½	**4**
6	6.90	2.50	8.02	8.12	7.00	9.50	11.06	11.12	.63	.88	.43	.37	⅞	¾ x 3½	6
8	**9.05**	**2.50**	**10.17**	**10.27**	**9.15**	**11.75**	**13.31**	**13.37**	**.66**	**1.00**	**.45**	**.39**	⅞	¾ x 3½	**6**
10	11.10	2.50	12.22	12.34	11.20	14.00	15.62	15.62	.70	1.00	.47	.41	⅞	¾ x 3½	8
12	**13.20**	**2.50**	**14.32**	**14.44**	**13.30**	**16.25**	**17.88**	**17.88**	**.73**	**1.00**	**.49**	**.43**	⅞	¾ x 3½	**8**
14	15.30	3.50	16.40	16.54	15.44	18.75	20.31	20.25	.79	1.25	.56	.51	⅞	¾ x 4	10
16	**17.40**	**3.50**	**18.50**	**18.64**	**17.54**	**21.00**	**22.56**	**22.50**	**.85**	**1.31**	**.57**	**.52**	⅞	¾ x 4	**12**
18	19.50	3.50	20.60	20.74	19.64	23.25	24.83	24.75	1.00	1.38	.68	.59	⅞	¾ x 4	12
20	**21.60**	**3.50**	**22.70**	**22.84**	**21.74**	**25.50**	**27.08**	**27.00**	**1.02**	**1.44**	**.69**	**.60**	⅞	¾ x 4	**14**
24	25.80	3.50	26.90	27.04	25.94	30.00	31.58	31.50	1.02	1.56	.75	.62	⅞	¾ x 4½	16

BENDS

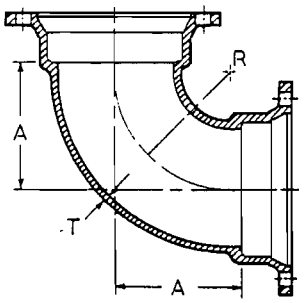

90° Bends (1/4)
5-600

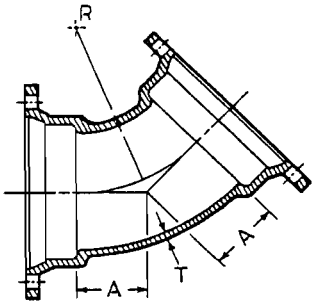

45° Bends(1/8)
5-605

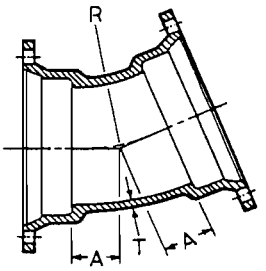

22½° Bends (1/16)
5-609

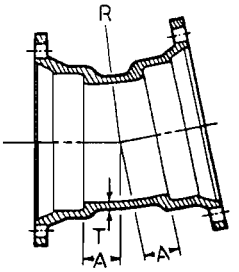

11¼° (1/32)
5-611

Size	Dimensions			Weights	Dimensions		Weights	Dimensions		Weights	Dimensions		Weights
	T	A	R		A	R		A	R		A	R	
3	.34	4.5	4	20	2.00	3.62	16	1.50	4.98	15	1.25	7.62	15
4	**.35**	**5.0**	**4.5**	**26**	**2.49**	**4.81**	**22**	**1.82**	**6.66**	**21**	**1.55**	**10.7**	**20**
6	.37	6.5	6	48	3.50	7.25	38	2.59	10.5	37	1.81	13.26	33
8	**.39**	**7.5**	**7**	**68**	**4.00**	**8.44**	**59**	**2.85**	**11.8**	**51**	**2.06**	**15.8**	**48**
10	.41	9.5	9	107	5.01	10.88	81	3.35	14.35	67	2.32	18.36	61
12	**.43**	**10.5**	**10**	**141**	**5.98**	**13.25**	**111**	**3.86**	**16.9**	**80**	**2.56**	**20.9**	**79**
14	.51	12.0	11.5	220	5.50	12.06	164	3.93	17.25	148	2.59	21.25	131
16	**.52**	**13.0**	**12.5**	**264**	**5.98**	**13.25**	**202**	**3.98**	**17.5**	**179**	**2.62**	**21.5**	**159**
18	.59	15.5	14.0	410	7.5	14.5	289	7.5	30.19	292	7.5	60.94	292
20	**.60**	**17.0**	**15.5**	**505**	**8.0**	**16.88**	**348**	**8.5**	**35.19**	**364**	**8.5**	**71.07**	**377**
24	.62	20.0	18.5	695	9.0	18.12	475	9.0	37.69	460	9.0	76.12	457

*18" thru 24" not included in AWWA C153 as of August, 1992

MECHANICAL JOINT SSB-DUCTILE IRON CLASS 350 FITTINGS

TEES

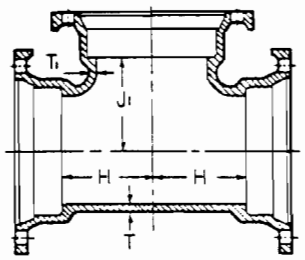

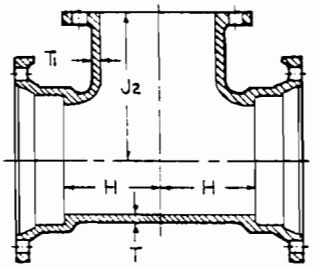

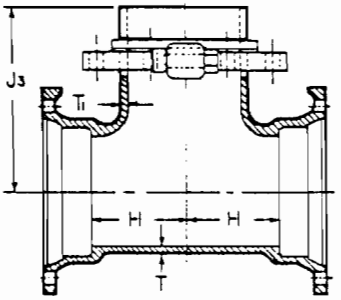

CROSS

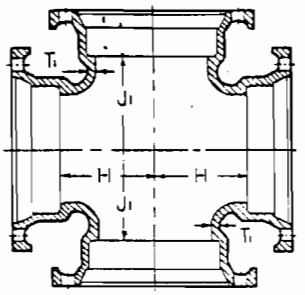

MJ Tee 5-620	MJ x FE Tee 5-623	MJ x Swivel Tee 5-625	Cross 5-631

Size	Dimensions						Weights			
	T	T'	H	J'	J²	J³	5-620	5-623	5-625†	5-631
3	.34	.34	3.5	3.5	5.5		24	26		29
4x3	**.35**	**.34**	**3.5**	**4**	**6.5**		**32**	**34**		**38**
4	.35	.35	4	4	6.5		35	38		42
6x3	**.37**	**.34**	**3.5**	**5**	**8**		**40**	**43**		**54**
6x4	.37	.35	4	5	8		51	54		60
6	**.37**	**.37**	**5**	**5**	**8**	**10.5**	**60**	**64**	**77**	**72**
8x3	.39	.34	4	6.5	9		67	68		
8x4	**.39**	**.35**	**4.5**	**6.5**	**9**		**71**	**72**		**81**
8x6	.39	.37	5.5	6.5	9	11.5	80	83	89	94
8	**.39**	**.39**	**6.5**	**6.5**	**9**	**11.5**	**90**	**94**	**116**	**108**
10x3	.41	.34	4	7.5	11		83	81		
10x4	**.41**	**.35**	**4.5**	**7.5**	**11**		**83**	**89**		**93**
10x6	.41	.37	5.5	7.5	11	13.0	93	107	113	106
10x8	**.41**	**.39**	**6.5**	**7.5**	**11**	**13.0**	**111**	**115**	**129**	**131**
10	.41	.41	7.5	7.5	11		120	130		144
12x3	**.43**	**.34**	**4**	**8.75**	**12**		**98**	**106**		
12x4	.43	.35	4.5	8.75	12		104	115		114
12x6	**.43**	**.37**	**5.5**	**8.75**	**12**	**14.25**	**115**	**120**	**128**	**129**
12x8	.43	.39	6.5	8.75	12	14.25	123	146	149	140
12x10	**.43**	**.41**	**7.5**	**8.75**	**12**		**153**	**174**		**181**
12	.43	.43	8.75	8.75	12		178	198		214
14x6	**.51**	**.44**	**6.5**	**10.5**	**14**	**16.0**	**183**	**205**	**211**	**210**
14x8	.51	.45	7.5	10.5	14		206	227		231
14x10	**.51**	**.46**	**8.5**	**10.5**	**14**		**229**	**244**		**255**
14x12	.51	.47	9.5	10.5	14		235	276		269
14	**.51**	**.51**	**10.5**	**10.5**	**14**		**281**	**302**		**344**
16x6	.52	.45	6.5	11.5	15	17.0	229	213	248	250
16x8	**.52**	**.46**	**7.5**	**11.5**	**15**		**248**	**260**		**264**
16x10	.52	.47	8.5	11.5	15		265	287		286
16x12	**.52**	**.48**	**9.5**	**11.5**	**15**		**281**	**312**		**310**
16x14	.52	.51	10.5	11.5	15		317	348		363
16	**.52**	**.52**	**11.5**	**11.5**	**15**		**323**	**374**		**410**

**Made to order only. Not returnable.

†Includes swivel gland

MECHANICAL JOINT SSB-DUCTILE IRON CLASS 350 FITTINGS

TEES

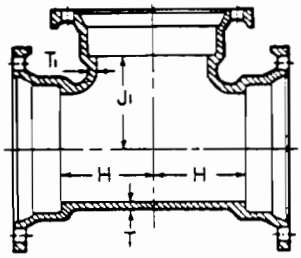

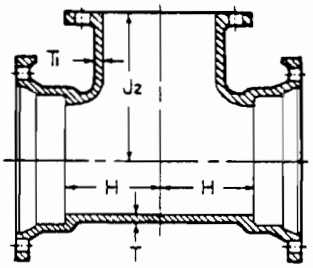

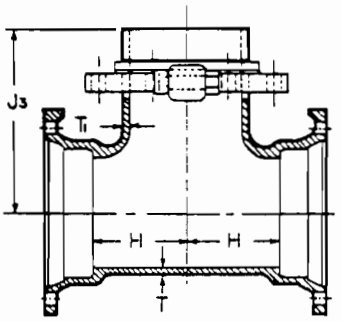

CROSS

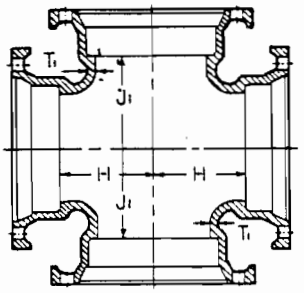

	MJ Tee 5-620		MJ x FE Tee 5-623			MJ x Swivel Tee 5-625				Cross 5-631
Size	Dimensions						Weights			
	T	T1	H	J1	J2	J3	5-620	5-623	5-625†	5-631
18x6	.59	.44	6.5	12.5	15.5	18.0	275	261	266	...
18x8	**.59**	**.45**	**7.5**	**12.5**			**310**	...	...	...
18x10	.59	.47	8.5	12.5			350	...	...	...
18x12	**.59**	**.49**	**9.5**	**12.5**			**370**	...	...	...
18x14	.59	.56	10.5	12.5			415	...	...	...
18x16	**.59**	**.57**	**11.5**	**12.5**			**445**	...	...	...
18	.59	.59	12.5	12.5			490	...	...	...
20x6	**.60**	**.44**	**7.0**	**14.0**	**17.0**	**19.5**	**335**	**341**	**346**	...
20x8	.60	.45	8.0	14.0			383	...	...	...
20x10	**.60**	**.47**	**9.0**	**14.0**			**410**	...	...	...
20x12	.60	.49	10.0	14.0			432	...	...	...
20x14	**.60**	**.56**	**11.0**	**14.0**			**475**	...	...	...
20x16	.60	.57	12.0	14.0			530	...	...	...
20x18	**.60**	**.59**	**13.0**	**14.0**			**560**	...	...	...
20	.60	.60	14.0	14.0			605	...	...	...
24x6	**.62**	**.44**	**7.0**	**16.0**	**19.0**	**21.5**	**454**	**440**	**445**	...
24x8	.62	.45	8.0	16.0			475	...	...	...
24x10	**.62**	**.47**	**9.0**	**16.0**			**505**	...	...	...
24x12	.62	.49	10.0	16.0			545	...	...	...
24x14	**.62**	**.56**	**11.0**	**16.0**			**585**	...	...	...
24x16	.62	.57	12.0	16.0			625	...	...	...
24x18	**.62**	**.59**	**13.0**	**16.0**			**675**	...	...	...
24x20	.62	.60	15.0	17.0			740	...	...	...
24	**.62**	**.62**	**17.0**	**17.0**			**830**	...	...	...

*18" thru 24" not included in AWWA C153 as of August, 1992

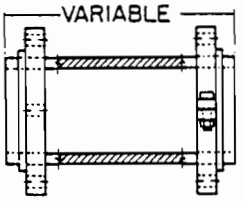

Swivel x Solid Adapters 5-698

Size By Laying Length	Wall Thickness	*Weight
6x13	.37	47
6x18	.37	58
6x24	37	69

*with glands

MECHANICAL JOINT SSB-DUCTILE IRON CLASS 350 FITTINGS

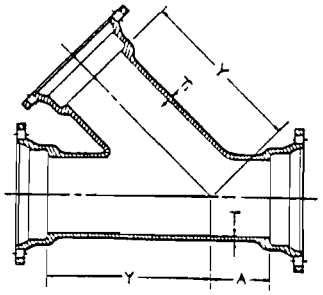

WYES
*5-628

Size	Dimensions				Weights
	A	Y	T	T'	
3	2.0	8.5	.34	.34	36
4x3	**1.0**	**9.0**	**.35**	**.34**	**40**
4	2.5	9.5	.35	.35	45
6x4	**1.5**	**11.0**	**.37**	**.35**	**67**
6	3.0	13.0	.37	.37	93
8x4	**0.5**	**13.0**	**.39**	**.35**	**93**
8x6	2.0	14.5	.39	.37	113
8	**3.5**	**16.0**	**.39**	**.39**	**136**
10x4	0	15.0	.41	.35	118
10x6	**1.0**	**16.0**	**.41**	**.37**	**136**
10x8	2.5	17.0	.41	.39	170
10	**3.5**	**19.0**	**.41**	**.41**	**199**
12x4	0	16.5	.43	.35	150
12x6	**1.5**	**18.5**	**.43**	**.37**	**186**
12x8	1.5	18.5	.43	.39	188
12x10	**3.0**	**20.0**	**.43**	**.41**	**223**
12	4.5	22.5	.43	.43	272
14x6	**0**	**19.5**	**.51**	**.44**	**256**
14x8	1.5	21.0	.51	.45	286
14x10	**3.0**	**22.5**	**.51**	**.46**	**322**
14x12	4.5	24.0	.51	.47	387
14	**6.0**	**25.0**	**.51**	**.51**	**465**
16x6	0	21.0	.52	.45	300
16x8	**0.5**	**22.5**	**.52**	**.46**	**327**
16x10	2.0	24.0	.52	.47	375
16x12	**3.5**	**25.0**	**.52**	**.48**	**465**
16x14	5.0	26.5	.52	.51	492
16	**6.5**	**28.0**	**.52**	**.52**	**575**

REDUCERS

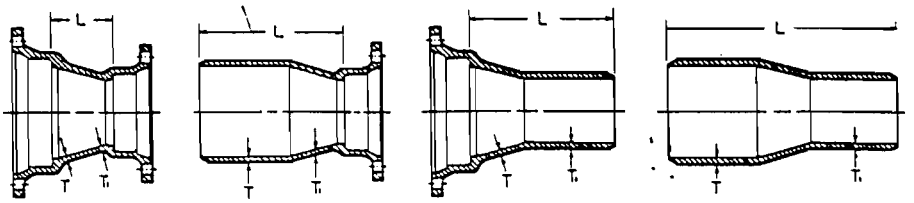

MJ x MJ 5-635 | **MJ SEB 5-636** | **MJ LEB 5-637** | **PE x PE 5-638**

Size			Dimensions				Weights			
	T	T'	5-635 L	5-636 L	5-637 L	5-638 L	5-635	5-636	5-637	5-638
4x3	.35	.34	4.	9.5	9.5	15.0	18	17	18	14
6x3	**.37**	**.34**	**5.**	**10.5**	**10.5**	**16.0**	**21**	**21**	**21**	**18**
6x4	.37	.35	4.	9.5	9.5	15.0	27	26	22	22
8x4	**.39**	**.35**	**5.**	**10.5**	**10.5**	**16.0**	**36**	**34**	**29**	**30**
8x6	.39	.37	4.	9.5	9.5	15.0	40	37	32	31
10x4	**.41**	**.35**	**7.**	**12.5**	**12.5**	**18.0**	**47**	**46**	**40**	**40**
10x6	.41	.37	5.	10.5	10.5	16.0	47	48	42	42
10x8	**.41**	**.39**	**4.**	**9.5**	**9.5**	**15.0**	**54**	**52**	**45**	**44**
12x4	.43	.35	9.	14.5	14.5	20.0	67	61	52	54
12x6	**.43**	**.37**	**7.**	**12.5**	**12.5**	**18.0**	**67**	**58**	**53**	**56**
12x8	.43	.39	5.	10.5	10.5	16.0	64	62	55	
12x10	**.43**	**.41**	**4.**	**9.5**	**9.5**	**15.0**	**78**	**62**	**57**	**60**
14x6	.51	.44	9.	17.0	14.5	22.5	108	107	112	109
14x8	**.51**	**.45**	**7.**	**15.0**	**12.5**	**20.5**	**104**	**107**	**108**	**101**
14x10	.51	.46	5.	13.0	10.5	18.5	100	102	100	96
14x12	**.51**	**.47**	**4.**	**12.0**	**9.5**	**17.5**	**100**	**101**	**100**	**85**
16x6	.52	.45	11.	19.0	16.5	24.5	136	132	144	128
16x8	**.52**	**.46**	**9.**	**17.0**	**14.5**	**22.5**	**132**	**128**	**136**	**112**
16x10	.52	.47	7.	15.0	12.5	20.5	128	124	128	123
16x12	**.52**	**.48**	**5.**	**13.0**	**10.5**	**18.5**	**125**	**123**	**119**	**113**
16x14	.52	.51	4.	12.0	12.0	20.0	140	139	138	133
18x8	**.59**	**.45**	**14.**	**22.0**	**19.5**	**27.5**	**194**	**190**	**195**	**170**
18x10	.59	.47	12.	20.0	17.5	25.5	196	180	185	175
18x12	**.59**	**.49**	**10.**	**18.0**	**15.5**	**23.5**	**185**	**170**	**190**	**181**
18x14	.59	.56	8.	16.0	16.0	24.0	190	181	200	185
18x16	**.59**	**.57**	**7.**	**15.0**	**15.0**	**23.0**	**196**	**180**	**190**	**188**
20x10	.60	.47	14.	22.0	19.0	27.5	225	210	210	185
20x12	**.60**	**.49**	**12.**	**20.0**	**17.5**	**25.5**	**210**	**200**	**210**	**195**
20x14	.60	.56	10.	18.0	18.0	26.0	208	198	205	195
20x16	**.60**	**.57**	**8.**	**16.0**	**16.0**	**24.0**	**225**	**215**	**222**	**212**
24x18	.60	.59	7.	15.0	15.0	23.0	233	220	225	210
24x10			...	...	...	...	**225**	...	...	...
24x12	.62	.49	16.	24.0	21.5	29.5	310	300	210	290
24x14	**.62**	**.56**	**14.**	**22.0**	**22.0**	**30.0**	**315**	**325**	**335**	
24x16	.62	.57	12.	20.0	20.0	28.0	324	319	310	
24x18	**.62**	**.59**	**10.**	**18.0**	**18.0**	**26.0**	**312**	**310**	**315**	**304**
24x20	.62	.60	8.	16.0	16.0	24.0	315	305	307	304

*18" thru 24" not included in AWWA C153 as of August, 1992

MECHANICAL JOINT SSB-DUCTILE IRON CLASS 350 FITTINGS

PLUGS & CAPS

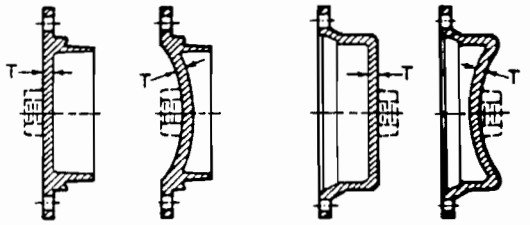

3"-12" 14"-24" 3"-12" 14"-24"

MJ Plug
Solid 5-650
Tapt 5-652

MJ Cap
Solid 5-654
Tapt 5-655

Size	Dimensions		Weights	
	T	Max. Tap	5-650 & 5-652	5-654 & 5-655
3	.46	3	6	7
4	**.46**	**4**	**10**	**10**
6	.46	4	18	17
8	**.46**	**4**	**26**	**25**
10	.56	4	36	35
12	**.56**	**4**	**46**	**44**
14	.62	4	85	79
16	**.62**	**4**	**93**	**100**
18	.65	4	130	122
20	**.66**	**4**	**153**	**202**
24	.68	4	202	214

*18" thru 24" not included in AWWA C153 as of August, 1992

SLEEVES

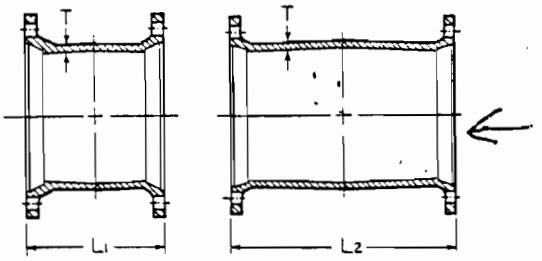

Short
5-644S

Long
5-644L

Size	Dimensions			Weights	
	T	L¹	L²	5-644S	5-644L
3	.34	7.5	12	13	21
4	**.35**	**7.5**	**12**	**17**	**25**
6	.37	7.5	12	28	39
8	**.39**	**7.5**	**12**	**38**	**53**
10	.41	7.5	12	49	64
12	**.43**	**7.5**	**12**	**56**	**82**
14	.56	9.5	15	111	141
16	**.57**	**9.5**	**15**	**137**	**172**
18	.68	9.5	15	···	200
20	**.69**	**9.5**	**15**	**···**	270
24	.75	9.5	15	···	370

TAPPED TEE

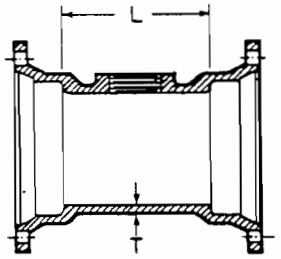

MJ Tapped Tee
5-642

Size	Dimensions			Weights
	T	L	Max. Tap	
3	.34	6	2½	19
4	**.35**	**6**	**3**	**23**
6	.37	6	4	37
8	**.39**	**6**	**4**	**53**
10	.41	6	4	71
12	**.43**	**6**	**4**	**82**
14	.51	6	4	127
16	**.52**	**6**	**4**	**164**

ADAPTERS

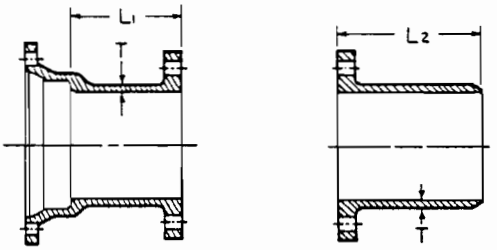

MJxFE
5-658

FExPE
5-661

Size	Dimensions			Weights	
	T	L¹	L²	5-658	5-661
3	.34	6	12	18	18
4	**.35**	**6**	**12**	**24**	**24**
6	.37	6	12	36	33
8	**.39**	**6**	**12**	**52**	**52**
10	.41	6	12	67	69
12	**.43**	**6**	**12**	**80**	**88**
14	.51	6	12	127	127
16	**.52**	**6**	**12**	**166**	**149**

Milherst Construction, Inc.
P.O. Box 631
Getzville, New York 14068

Phone (716) 688-9098
Fax (716) 688-9562

Submittal No.14-Rev.1

Lehigh Valley RR Derailment Site

Owner NYS Department of Environmental Conservation
Bureau of Construction Services, 12th Floor
625 Broadway
Albany, NY 12233-7013

Contractor Milherst Construction, Inc
Date January 17, 2002

Item: Ductile Iron Fittings

Specification:
Section: 02610
Page No.: 02610-2
Para. No.: 2.01
Drawing No.: N/A
Location: As Required

Note the following:
AWWA C153 designates compact fittings.
Class 350 Fitting is equivalent to Class 56 Pipe.
Class 56 is superior to the Class 51 required.
(They do not make Class 51 Fittings)
The fittings are cement lined and coated to AWWA C104/ANSI A21.04.

Milherst Construction, Inc. certifies that all quantities, dimensions, specified performance criteria, installation requirements, materials, catalog numbers, and similar data with respect thereto have been reviewed or that each Shop Drawing or sample has been coordinated with other Shop Drawings and samples and with the requirements of the Work and Contract Documents.

By: Charles F. Kubiniec
Charles F. Kubiniec
Project Manager

☒ **APPROVED**
☐ **APPROVED AS CORRECTED**
(Resubmit final copy for file)

☐ **REVISE AND RESUBMIT BEFORE PROCEEDING**
☐ **NOT APPROVED**

Review only for conformance with the design concept of the project and with information given in the Contract Documents. The Contractor is responsible for: verifying that dimensions are confirmed and correlated at the job site; obtaining information that pertains to the fabrication processes or to techniques of construction, and: coordinating the work of all subcontractors.
STEARNS & WHELER, LLC Engineers and Scientists

By JRP **Date** 1/28/2

Submittal 14- Revision 1

MECHANICAL JOINT SSB-DUCTILE IRON CLASS 350 FITTINGS

Compact fittings ✓
Cement Lined
Coated

Tyler Pipe
Subsidiary of
Tyler Corporation

Sample Specification

3" through 16" Mechanical Joint Ductile Iron Fittings shall be produced in strict accordance with all applicable terms and provisions of ANSI/AWWA C153/A21.53 and ANSI/AWWA C111/A21.11 18" thru 24" diameters shall be manufacturer's standards with wall thickness equivalent to Class 56 ductile iron pipe. The working pressure rating shall be 350 PSI.

Superior to Class 51

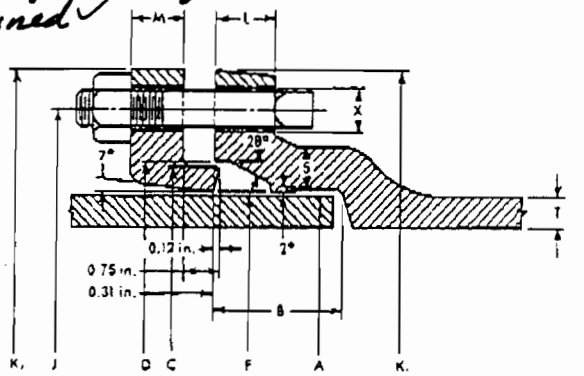

Joint Dimensions in Inches

Size	A Dia.	B	C Dia.	D Dia.	F Dia.	J Dia.	K, Dia.	K, Dia.	L	M	S	T	X Dia.	Bolt Size	Bolt No.
3	3.96	2.50	4.84	4.94	4.06	6.19	7.62	7.69	.59	.62	.38	.34	¾	⅝ x 3	4
4	4.80	2.50	5.92	6.02	4.90	7.50	9.06	9.12	.60	.75	.41	.35	⅞	¾ x 3½	4
6	6.90	2.50	8.02	8.12	7.00	9.50	11.06	11.12	.63	.88	.43	.37	⅞	¾ x 3½	6
8	9.05	2.50	10.17	10.27	9.15	11.75	13.31	13.37	.66	1.00	.45	.39	⅞	¾ x 3½	6
10	11.10	2.50	12.22	12.34	11.20	14.00	15.62	15.62	.70	1.00	.47	.41	⅞	¾ x 3½	8
12	13.20	2.50	14.32	14.44	13.30	16.25	17.88	17.88	.73	1.00	.49	.43	⅞	¾ x 3½	8
14	15.30	3.50	16.40	16.54	15.44	18.75	20.31	20.25	.79	1.25	.56	.51	⅞	¾ x 4	10
16	17.40	3.50	18.50	18.64	17.54	21.00	22.56	22.50	.85	1.31	.57	.52	⅞	¾ x 4	12
18	19.50	3.50	20.60	20.74	19.64	23.25	24.83	24.75	1.00	1.38	.68	.59	⅞	¾ x 4	12
20	21.60	3.50	22.70	22.84	21.74	25.50	27.08	27.00	1.02	1.44	.69	.60	⅞	¾ x 4	14
24	25.80	3.50	26.90	27.04	25.94	30.00	31.58	31.50	1.02	1.56	.75	.62	⅞	¾ x 4½	16

BENDS

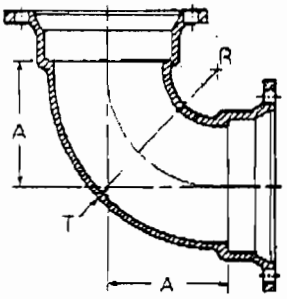

90° Bends (1/4)
5-600

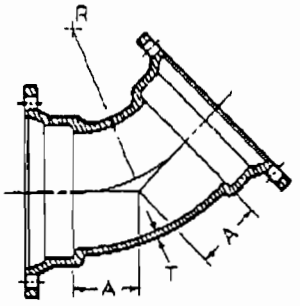

45° Bends(1/8)
5-605

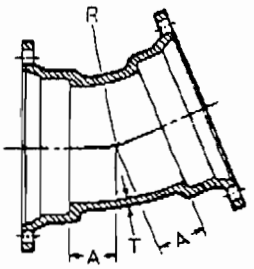

22½° Bends (1/16)
5-609

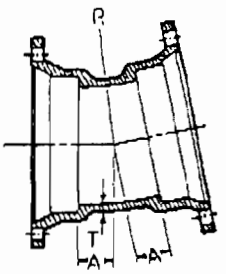

11¼° (1/32)
5-611

Size	Dimensions			Weights	Dimensions		Weights	Dimensions		Weights	Dimensions		Weights
	T	A	R		A	R		A	R		A	R	
3	.34	4.5	4	20	2.00	3.62	16	1.50	4.98	15	1.25	7.62	15
4	.35	5.0	4.5	26	2.49	4.81	22	1.82	6.66	21	1.55	10.7	20
6	.37	6.5	6	48	3.50	7.25	38	2.59	10.5	37	1.81	13.26	33
8	.39	7.5	7	68	4.00	8.44	59	2.85	11.8	51	2.06	15.8	48
10	.41	9.5	9	107	5.01	10.88	81	3.35	14.35	67	2.32	18.36	61
12	.43	10.5	10	141	5.98	13.25	111	3.86	16.9	80	2.56	20.9	79
14	.51	12.0	11.5	220	5.50	12.06	164	3.93	17.25	148	2.59	21.25	131
16	.52	13.0	12.5	264	5.98	13.25	202	3.98	17.5	179	2.62	21.5	159
18	.59	15.5	14.0	410	7.5	14.5	289	7.5	30.19	292	7.5	60.94	292
20	.60	17.0	15.5	505	8.0	16.88	348	8.5	35.19	364	8.5	71.07	377
24	.62	20.0	18.5	695	9.0	18.12	475	9.0	37.69	460	9.0	76.12	457

*18" thru 24" not included in AWWA C153 as of August, 1992

JAN-16-2002 11:18 MJ PIPE 2356156 P.03

Tyler Pipe
Subsidiary of
Tyler Corporation

MECHANICAL JOINT SSB-DUCTILE IRON CLASS 350 FITTINGS

BENDS

90° MJ x Flange Bend (1/4)
5-600 F

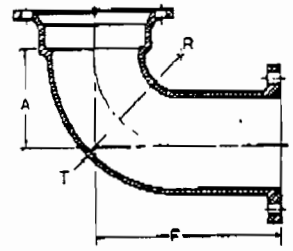

Size	Dimensions				Weights
	T	A	R	F	
3	.34	4.5	4	5.5	20
4	.35	5.0	4.5	6.5	26
6	.37	6.5	6	8.0	48
8	.39	7.5	7	9.0	68
10	.41	9.5	9	11.0	107
12	.43	10.5	10	12.0	141
14	.51	12.0	11.5	14.0	227
16	.52	13.0	12.5	15.0	280

GLANDS

Glands
5-690

Size	Weight*	Size	Weight*
3	3	12	12
4	4	14	16
6	6	16	20
8	8	18	25
10	10	20	31
		24	39

*18" thru 24" not included in AWWA C153 as of August, 1992.

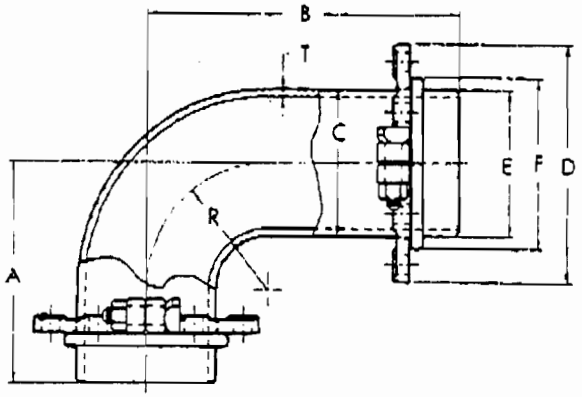

90° Swivel x MJ Hydrant Ell
5-698

Size	Deminsions								*Weight
	T	A	B	C	D	E	F	R	
6	.37	10.5	15.5	7.10	11.2	6.90	8.02	6.0	85

*with glands

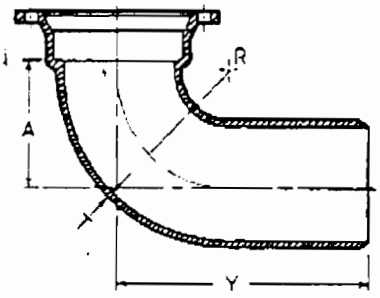

90° MJ x PE Bend (1/4)
***5-603**

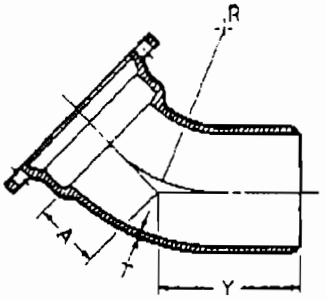

45° MJ x PE Bend (1/8)
***5-607**

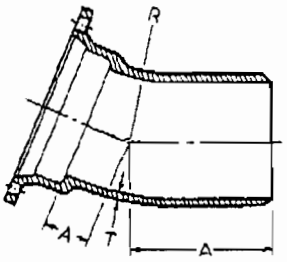

22½° MJ x PE Bend (1/16)
***5-610**

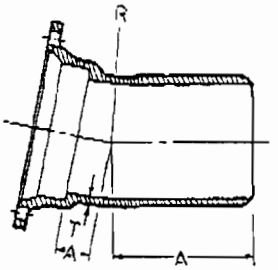

11¼° MJ x PE Bend (1/32)
***5-612**

Size	Dimensions				Weights	Dimensions			Weights	Dimensions			Weights	Dimensions			Weights
	T	A	Y	R		A	Y	R		A	Y	R		A	Y	R	
3	.34	4.5	10.0	4.0	20	2.0	7.5	3.62	16	1.50	7.00	4.98	16	1.25	6.75	7.62	16
4	.35	5.0	10.5	4.5	25	2.5	8.0	4.81	22	1.82	7.32	6.66	20	1.55	7.05	10.70	19
6	.37	6.5	12.0	6.0	45	3.5	9.0	7.25	37	2.58	8.08	10.50	35	1.80	7.30	13.26	32
8	.39	7.5	13.0	7.0	65	4.0	9.5	8.44	56	2.84	8.34	11.80	49	2.05	7.55	15.80	46
10	.41	9.5	15.0	9.0	109	5.0	10.5	10.88	83	3.35	8.85	14.35	66	2.31	7.81	18.36	60
12	.43	10.5	16.0	10.0	135	6.0	11.5	13.25	108	3.86	9.36	16.90	79	2.56	8.06	20.90	78
14	.51	12.0	20.0	11.5	220	5.5	13.5	12.06	165	3.93	11.93	17.25	152	2.59	10.59	21.25	133
16	.52	13.0	21.0	12.5	254	6.0	14.0	13.25	206	3.98	11.98	17.50	181	2.62	10.62	21.50	161
18	.59	15.5	23.5	14.0	405	6.0	15.5	14.50	290	7.50	15.50	30.19	290	7.50	15.5	60.94	288
20	.60	17.0	25.0	15.5	465	7.5	16.5	16.88	340	8.50	16.50	35.19	345	8.50	16.5	71.07	360
24	.62	20.0	28.0	18.5	710	9.0	17.0	18.12	460	9.00	17.00	37.69	445	9.00	17.0	76.12	...

*18" thru 24" not included in AWWA C153 as of August, 1992

Tyler Pipe/Utilities Division • P.O. Box 2027 • Tyler, Texas 75710 • (903) 882-5511 • FAX (903) 882-7043

JAN-16-2002 11:18 MJ PIPE 2356156 P.04

MECHANICAL JOINT SSB-DUCTILE IRON CLASS 350 FITTINGS

TEES

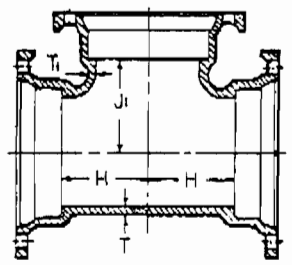

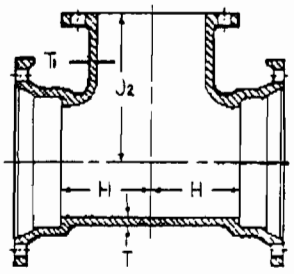

CROSS

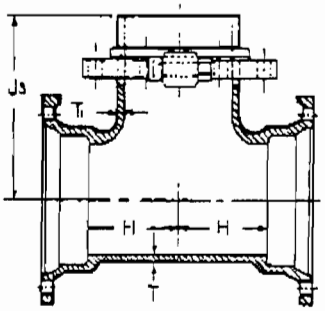

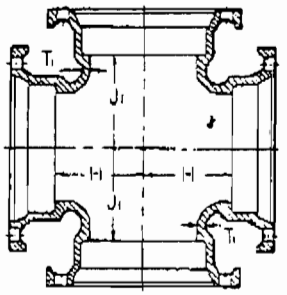

	MJ Tee 5-620			MJ x FE Tee 5-623			MJ x Swivel Tee 5-625			Cross 5-631
Size	Dimensions						Weights			
	T	T1	H	J1	J2	J3	5-620	5-623	5-625†	5-631
3	.34	.34	3.5	3.5	5.5		24	26		29
4x3	**.35**	**.34**	**3.5**	**4**	**6.5**		**32**	**34**		**38**
4	.35	.35	4	4	6.5		35	38		42
6x3	**.37**	**.34**	**3.5**	**5**	**8**		**40**	**43**		**54**
6x4	.37	.35	4	5	8		51	54		60
6	**.37**	**.37**	**5**	**5**	**8**	**10.5**	**60**	**64**	**77**	**72**
8x3	.39	.34	4	6.5	9		67	68		
8x4	**.39**	**.35**	**4.5**	**6.5**	**9**		**71**	**72**		**81**
8x6	.39	.37	5.5	6.5	9	11.5	80	83	89	94
8	**.39**	**.39**	**6.5**	**6.5**	**9**	**11.5**	**90**	**94**	**116**	**108**
10x3	.41	.34	4	7.5	11		83	81		
10x4	**.41**	**.35**	**4.5**	**7.5**	**11**		**83**	**89**		**93**
10x6	.41	.37	5.5	7.5	11	13.0	93	107	113	106
10x8	**.41**	**.39**	**6.5**	**7.5**	**11**	**13.0**	**111**	**115**	**129**	**131**
10	.41	.41	7.5	7.5	11		120	130		144
12x3	**.43**	**.34**	**4**	**8.75**	**12**		**98**	**106**		
12x4	.43	.35	4.5	8.75	12		104	115		114
12x6	**.43**	**.37**	**5.5**	**8.75**	**12**	**14.25**	**115**	**120**	**128**	**129**
12x8	.43	.39	6.5	8.75	12	14.25	123	146	149	140
12x10	**.43**	**.41**	**7.5**	**8.75**	**12**		**153**	**174**		**181**
12	.43	.43	8.75	8.75	12		178	198		214
14x6	**.51**	**.44**	**6.5**	**10.5**	**14**	**16.0**	**183**	**205**	**211**	**210**
14x8	.51	.45	7.5	10.5	14		206	227		231
14x10	**.51**	**.46**	**8.5**	**10.5**	**14**		**229**	**244**		**255**
14x12	.51	.47	9.5	10.5	14		235	276		269
14	**.51**	**.51**	**10.5**	**10.5**	**14**		**281**	**302**		**344**
16x6	.52	.45	6.5	11.5	15	17.0	229	213	248	250
16x8	**.52**	**.46**	**7.5**	**11.5**	**15**		**248**	**260**		**264**
16x10	.52	.47	8.5	11.5	15		265	287		286
16x12	**.52**	**.48**	**9.5**	**11.5**	**15**		**281**	**312**		**310**
16x14	.52	.51	10.5	11.5	15		317	348		363
16	**.52**	**.52**	**11.5**	**11.5**	**15**		**323**	**374**		**410**

**Made to order only. Not returnable.

†Includes swivel gland

JAN-16-2002 11:18 MJ PIPE 2356156 P.05

MECHANICAL JOINT SSB-DUCTILE IRON CLASS 350 FITTINGS

TEES

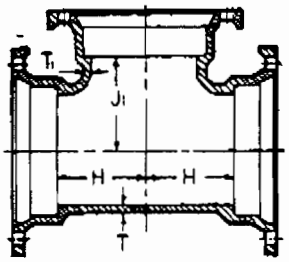

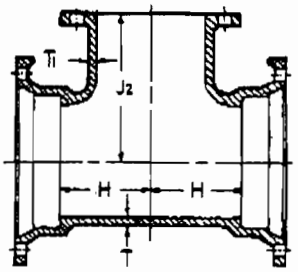

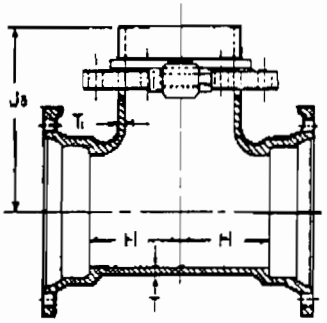

CROSS

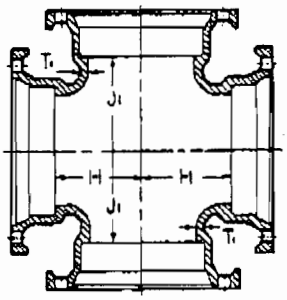

Size	MJ Tee 5-620		MJ x FE Tee 5-623			MJ x Swivel Tee 5-625	Weights			
	Dimensions									
	T	T'	H	J'	J²	J³	5-620	5-623	5-625†	5-631
18x6	.59	.44	6.5	12.5	15.5	18.0	275	261	266	...
18x8	**.59**	**.45**	**7.5**	**12.5**			**310**	...	...	...
18x10	.59	.47	8.5	12.5			350	...	...	...
18x12	**.59**	**.49**	**9.5**	**12.5**			**370**	...	...	...
18x14	.59	.56	10.5	12.5			415	...	...	...
18x16	**.59**	**.57**	**11.5**	**12.5**			**445**	...	...	...
18	.59	.59	12.5	12.5			490	...	...	...
20x6	**.60**	**.44**	**7.0**	**14.0**	**17.0**	**19.5**	**335**	**341**	**346**	...
20x8	.60	.45	8.0	14.0			383	...	...	...
20x10	**.60**	**.47**	**9.0**	**14.0**			**410**	...	...	...
20x12	.60	.49	10.0	14.0			432	...	...	...
20x14	**.60**	**.56**	**11.0**	**14.0**			**475**	...	...	...
20x16	.60	.57	12.0	14.0			530	...	...	...
20x18	**.60**	**.59**	**13.0**	**14.0**			**560**	...	...	...
20	.60	.60	14.0	14.0			605	...	...	...
24x6	**.62**	**.44**	**7.0**	**16.0**	**19.0**	**21.5**	**454**	**440**	**445**	...
24x8	.62	.45	8.0	16.0			475	...	...	...
24x10	**.62**	**.47**	**9.0**	**16.0**			**505**	...	...	...
24x12	.62	.49	10.0	16.0			545	...	...	...
24x14	**.62**	**.56**	**11.0**	**16.0**			**585**	...	...	...
24x16	.62	.57	12.0	16.0			625	...	...	...
24x18	**.62**	**.59**	**13.0**	**16.0**			**675**	...	...	...
24x20	.62	.60	15.0	17.0			740	...	...	...
24	**.62**	**.62**	**17.0**	**17.0**			**830**	...	...	...

"18" thru 24" not included in AWWA C153 as of August, 1992

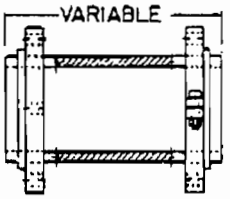

Swivel x Solid Adapters 5-698

Size By Laying Length	Wall Thickness	*Weight
6x13	.37	47
6x18	.37	58
6x24	37	69

*with glands

JAN-16-2002 11:19 MJ PIPE 2356156 P.06

MECHANICAL JOINT SSB-DUCTILE IRON CLASS 350 FITTINGS

Tyler Pipe
Subsidiary of
Tyler Corporation

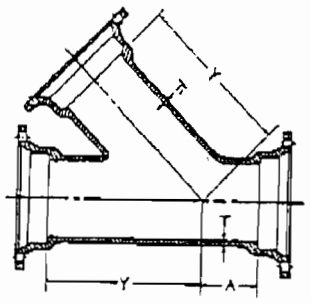

WYES
*5-628

Size	Dimensions				Weights
	A	Y	T	T'	
3	2.0	8.5	.34	.34	36
4x3	**1.0**	**9.0**	**.35**	**.34**	**40**
4	2.5	9.5	.35	.35	45
6x4	**1.5**	**11.0**	**.37**	**.35**	**67**
6	3.0	13.0	.37	.37	93
8x4	**0.5**	**13.0**	**.39**	**.35**	**93**
8x6	2.0	14.5	.39	.37	113
8	**3.5**	**16.0**	**.39**	**.39**	**136**
10x4	0	15.0	.41	.35	118
10x6	**1.0**	**16.0**	**.41**	**.37**	**136**
10x8	2.5	17.0	.41	.39	170
10	**3.5**	**19.0**	**.41**	**.41**	**199**
12x4	0	16.5	.43	.35	150
12x6	**1.5**	**18.5**	**.43**	**.37**	**186**
12x8	1.5	18.5	.43	.39	188
12x10	**3.0**	**20.0**	**.43**	**.41**	**223**
12	4.5	22.5	.43	.43	272
14x6	**0**	**19.5**	**.51**	**.44**	**256**
14x8	1.5	21.0	.51	.45	286
14x10	**3.0**	**22.5**	**.51**	**.46**	**322**
14x12	4.5	24.0	.51	.47	387
14	**6.0**	**25.0**	**.51**	**.51**	**465**
16x6	0	21.0	.52	.45	300
16x8	**0.5**	**22.5**	**.52**	**.46**	**327**
16x10	2.0	24.0	.52	.47	375
16x12	**3.5**	**25.0**	**.52**	**.48**	**465**
16x14	5.0	26.5	.52	.51	492
16	**6.5**	**28.0**	**.52**	**.52**	**575**

REDUCERS

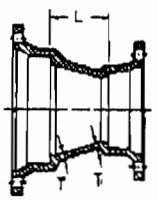

MJ x MJ
5-635

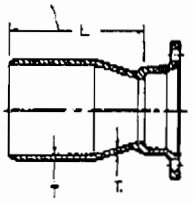

MJ SEB
5-636

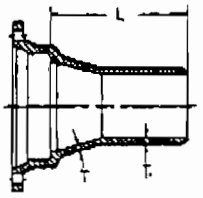

MJ LEB
5-637

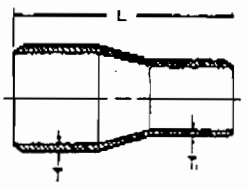

PE x PE
5-638

Size	Dimensions						Weights			
	T	T'	5-635 L	5-636 L	5-637 L	5-638 L	5-635	5-636	5-637	5-638
4x3	.35	.34	4.	9.5	9.5	15.0	18	17	18	14
6x3	**.37**	**.34**	**5.**	**10.5**	**10.5**	**16.0**	**21**	**21**	**21**	**18**
6x4	.37	.35	4.	9.5	9.5	15.0	27	26	22	22
8x4	**.39**	**.35**	**5.**	**10.5**	**10.5**	**16.0**	**36**	**34**	**29**	**30**
8x6	.39	.37	4.	9.5	9.5	15.0	40	37	32	31
10x4	**.41**	**.35**	**7.**	**12.5**	**12.5**	**18.0**	**47**	**46**	**40**	**40**
10x6	.41	.37	5.	10.5	10.5	16.0	47	48	42	42
10x8	**.41**	**.39**	**4.**	**9.5**	**9.5**	**15.0**	**54**	**52**	**45**	**44**
12x4	.43	.35	9.	14.5	14.5	20.0	67	61	52	54
12x6	**.43**	**.37**	**7.**	**12.5**	**12.5**	**18.0**	**67**	**58**	**53**	**56**
12x8	.43	.39	5.	10.5	10.5	16.0	64	62	55	58
12x10	**.43**	**.41**	**4.**	**9.5**	**9.5**	**15.0**	**78**	**62**	**57**	**60**
14x6	.51	.44	9.	17.0	14.5	22.5	108	107	112	109
14x8	**.51**	**.45**	**7.**	**15.0**	**12.5**	**20.5**	**104**	**107**	**108**	**101**
14x10	.51	.46	5.	13.0	10.5	18.5	100	102	100	96
14x12	**.51**	**.47**	**4.**	**12.0**	**9.5**	**17.5**	**100**	**101**	**100**	**85**
16x6	.52	.45	11.	19.0	16.5	24.5	136	132	144	128
16x8	**.52**	**.46**	**9.**	**17.0**	**14.5**	**22.5**	**132**	**128**	**136**	**112**
16x10	.52	.47	7.	15.0	12.5	20.5	128	124	128	123
16x12	**.52**	**.48**	**5.**	**13.0**	**10.5**	**18.5**	**125**	**123**	**119**	**113**
16x14	.52	.51	4.	12.0	12.0	20.0	140	139	138	133
18x8	**.59**	**.45**	**14.**	**22.0**	**19.5**	**27.5**	**194**	**190**	**195**	**170**
18x10	.59	.47	12.	20.0	17.5	25.5	196	180	185	175
18x12	**.59**	**.49**	**10.**	**18.0**	**15.5**	**23.5**	**185**	**170**	**190**	**181**
18x14	.59	.56	8.	16.0	16.0	24.0	190	181	200	185
18x16	**.59**	**.57**	**7.**	**15.0**	**15.0**	**23.0**	**196**	**180**	**190**	**188**
20x10	.60	.47	14.	22.0	19.0	27.5	225	210	210	185
20x12	**.60**	**.49**	**12.**	**20.0**	**17.5**	**25.5**	**210**	**200**	**210**	**195**
20x14	.60	.56	10.	18.0	18.0	26.0	208	198	205	195
20x16	**.60**	**.57**	**8.**	**16.0**	**16.0**	**24.0**	**225**	**215**	**222**	**212**
24x18	.60	.59	7.	15.0	15.0	23.0	233	220	225	210
24x10			...	...	...	...	**225**	...	...	...
24x12	.62	.49	16.	24.0	21.5	29.5	310	300	210	290
24x14	**.62**	**.56**	**14.**	**22.0**	**22.0**	**30.0**	**315**	**325**	**335**	**310**
24x16	.62	.57	12.	20.0	20.0	28.0	324	319	310	304
24x18	**.62**	**.59**	**10.**	**18.0**	**18.0**	**26.0**	**312**	**310**	**315**	**304**
24x20	.62	.60	8.	16.0	16.0	24.0	315	305	307	304

*18" thru 24" not included in AWWA C153 as of August, 1992

JAN-16-2002 11:19 MJ PIPE 2356156 P.07

Tyler Pipe
Subsidiary of
Tyler Corporation

MECHANICAL JOINT SSB-DUCTILE IRON CLASS 350 FITTINGS

PLUGS & CAPS

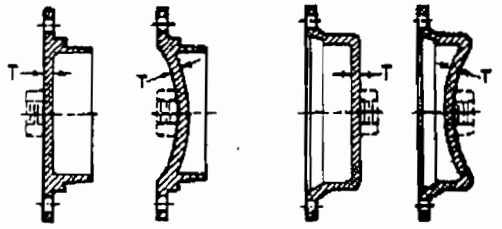

3"-12" 14"-24" 3"-12" 14"-24"

MJ Plug
Solid 5-650
Tapt 5-652

MJ Cap
Solid 5-654
Tapt 5-655

Size	Dimensions		Weights	
	T	Max. Tap	5-650 & 5-652	5-654 & 5-656
3	.46	3	6	7
4	.46	4	10	10
6	.46	4	18	17
8	.46	4	26	25
10	.56	4	36	35
12	.56	4	46	44
14	.62	4	85	79
16	.62	4	93	100
18	.65	4	130	122
20	.66	4	153	202
24	.68	4	202	214

*18" thru 24" not included in AWWA C153 as of August, 1992

SLEEVES

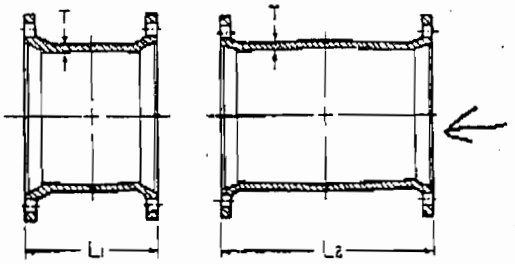

Short
5-644S

Long
5-644L

Size	Dimensions			Weights	
	T	L1	L2	5-644S	5-644L
3	.34	7.5	12	13	21
4	.35	7.5	12	17	25
6	.37	7.5	12	28	39
8	.39	7.5	12	38	53
10	.41	7.5	12	49	64
12	.43	7.5	12	56	82
14	.56	9.5	15	111	141
16	.57	9.5	15	137	172
18	.68	9.5	15	...	200
20	.69	9.5	15	...	270
24	.75	9.5	15	...	370

TAPPED TEE

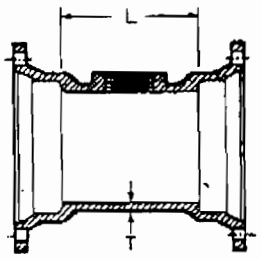

MJ Tapped Tee
5-642

Size	Dimensions			Weights
	T	L	Max. Tap	
3	.34	6	2½	19
4	.35	6	3	23
6	.37	6	4	37
8	.39	6	4	53
10	.41	6	4	71
12	.43	6	4	82
14	.51	6	4	127
16	.52	6	4	164

ADAPTERS

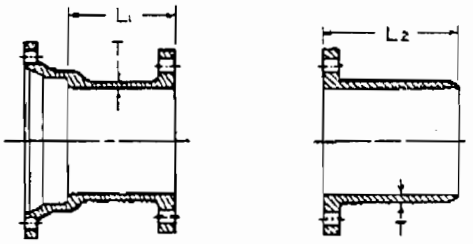

MJxFE
5-658

FExPE
5-661

Size	Dimensions			Weights	
	T	L1	L2	5-658	5-661
3	.34	6	12	18	18
4	.35	6	12	24	24
6	.37	6	12	36	33
8	.39	6	12	52	52
10	.41	6	12	67	69
12	.43	6	12	80	88
14	.51	6	12	127	127
16	.52	6	12	166	149

Milherst Construction, Inc.
P.O. Box 631
Getzville, New York 14068

Phone (716) 688-9098
Fax (716) 688-9562

Submittal No. 15

Lehigh Valley RR Derailment Site

Owner NYS Department of Environmental Conservation
Bureau of Construction Services, 12th Floor
625 Broadway
Albany, NY 12233-7013

Contractor Milherst Construction, Inc
Date 12/18/01

Item: Cover sheet for various materials

Specification:
Section: Letter from MJ Pipe & Supply
Page No.:
Para. No.: Options for products supplied by MJ Pipe & Supply
Drawing No.:
Location:

I hereby certify that review, verification of products required, field dimentions, adjacent construction work and coordination of information, is in compliance with the requirements of the work and contract documents.

Approved By: Charles F. Kubinec

☐ APPROVED
☒ APPROVED AS CORRECTED
~~(Resubmit final copy for file)~~
☐ REVISE AND RESUBMIT BEFORE PROCEEDING
☐ NOT APPROVED

Review only for conformance with the design concept of the project and with information given in the Contract Documents. The Contractor is responsible for: verifying that dimensions are confirmed and correlated at the job site; obtaining information that pertains to the fabrication processes or to techniques of construction, and: coordinating the work of all subcontractors.
STEARNS & WHELER, LLC Engineers and Scientists

By TSF Date 1/2/02

Corporation stops for sizes 1½" and 2" are not acceptable - see shop Dwg #19

M. J. Pipe & Supply Corp.
609 Buffalo Road
Rochester, NY 14611
Ph. 716-235-6990 • Fax: 716-235-6156

October 17, 2001

SUBMITTAL
MILLHERST CONSTRUCTION, INC.
Job: D004327
Item: Various
Description: Options for Materials
Reviewed By: CFK
Date: 12/18/01

Millherst Construction, Inc.
260 Millersport Highway
Getzville, New York 14068

Attn: James Collins, Jr.

Re: Submittals for Lehigh Valley RR - Water Project

Dear Mr. Collins:

The following letter is an integral part of the shop drawings. The following is a list detailing how certain options for products will be provided for the above referenced products.

Valves:	a)	Will have stainless steel bonnets bolts & nuts.
	b)	Will be open left.
	c)	Will be non-rising stem.
Fire Hydrants:	a)	Will be 5¼" main valve opening.
	b)	Will be open left.
	c)	Will be 2-hose & 1 steamer.
	d)	Will be 6" MJ Shoe.
	e)	Will be Yellow.
	f)	Will be at least 5'6" bury, unless otherwise approved.
Corp Stops:	a)	Will be 4701T for the 1".
	b)	Will be 4701BT for 1½" and 2".
Curb Boxes:	a)	Will have a "foot" piece for 1½" and 2".

Should any further clarifications be required, please contact me or have the Clark Patterson's reviewer call direct.

Sincerely,

Michael J. Dooley
President

MJD/jkk

Milherst Construction, Inc.
P.O. Box 631
Getzville, New York 14068

Phone (716) 688-9098
Fax (716) 688-9562

Submittal No. 16

Lehigh Valley RR Derailment Site

Owner NYS Department of Environmental Conservation
Bureau of Construction Services, 12th Floor
625 Broadway
Albany, NY 12233-7013

Contractor Milherst Construction, Inc
Date 12/18/01

Item: Tapping Sleeve

Specification:

Section: 02650
Page No.: 02650 - 1
Para. No.: 2.01
Drawing No.: N/A
Location: N/A

I hereby certify that review, verification of products required, field dimentions, adjacent construction work and coordination of information, is in compliance with the requirements of the work and contract documents.

Approved By: Charles F. Kubinec

☐ APPROVED
☒ APPROVED AS CORRECTED
~~(Resubmit final copy for file)~~
☐ REVISE AND RESUBMIT BEFORE PROCEEDING
☐ NOT APPROVED

Review only for conformance with the design concept of the project and with information given in the Contract Documents. The Contractor is responsible for: verifying that dimensions are confirmed and correlated at the job site; obtaining information that pertains to the fabrication processes or to techniques of construction, and: coordinating the work of all subcontractors.
STEARNS & WHELER, LLC Engineers and Scientists

By TJF Date 12/28/01

Approval on the CST-EX Model only (not the CST-SL)

STAINLESS STEEL
Pressure Rated Tapping Sleeves

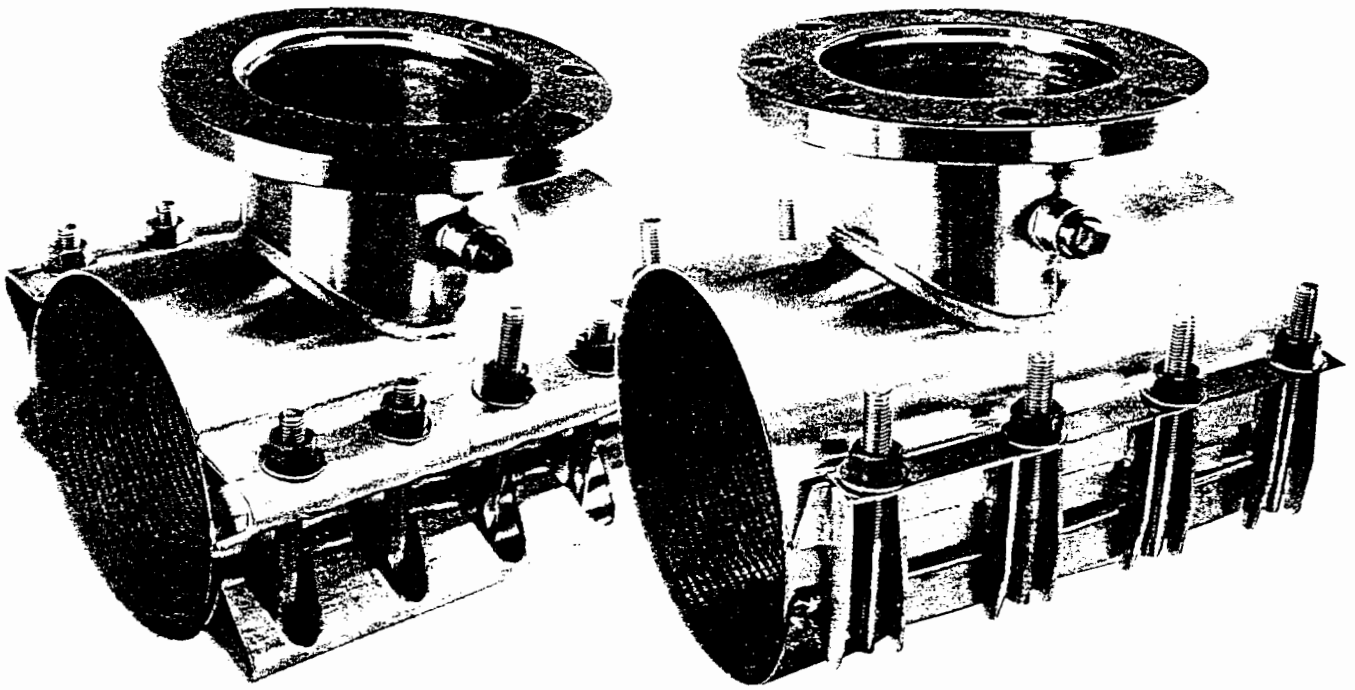

SUBMITTAL
MICHEAST CONSTRUCTION, INC.
Job: D004327
Item: Stainless
Descr: Tapping Sleeve
Reviewed By: CFK
Date: 12/18/01

Cascade
Waterworks Mfg.

1213 BADGER STREET • YORKVILLE, ILLINOIS 60560
(630) 553-0840 • (800) 426-4301 • FAX (630) 553-0181

CST-SL

- Easy to install-lighter with fewer parts than mechanical joint sleeves

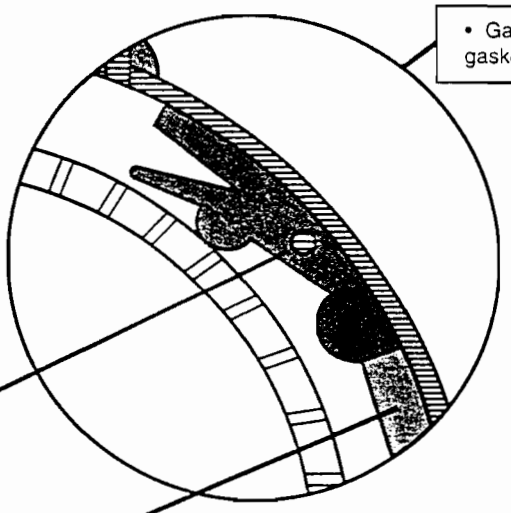

- Gasket detail- view showing gasket not compressed
- Throat Gasket -Double O-Ring with hydraulic lip and stainless steel ring insert bonded to prevent radial expansion under pressure.
- Mat gasket completes full hoop seal on main pipe.

- Branch I.D. 0.5" larger than nominal size
- Accepts full size shell cutter
- Full hoop support and seal
- All surfaces fully passivated
- All sleeves provided with test outlet

TEN YEAR WARRANTY

CST-EX-5080-36SS

- Each sleeve hydrostatically tested to 1.5 times R.W.P. at factory
- Each sleeve serial numbered – certified test records available
- All branch sections double welded to both shell and flange – TIG inside/MIG outside
- All welds fully chemically passivated in accordance with ASTM A-380.
- Special application pressure ratings available (up to 600 P.S.I. depending on size)
- Broad range of options:
  Drop in track bolts or stud and receiver bar assemblies
  Stainless steel or low alloy steel flanges
  Special compound gaskets – EPDM/Nitrile/Fluorocarbon available
  Special steels – 304L-316L or other stabilized grades available

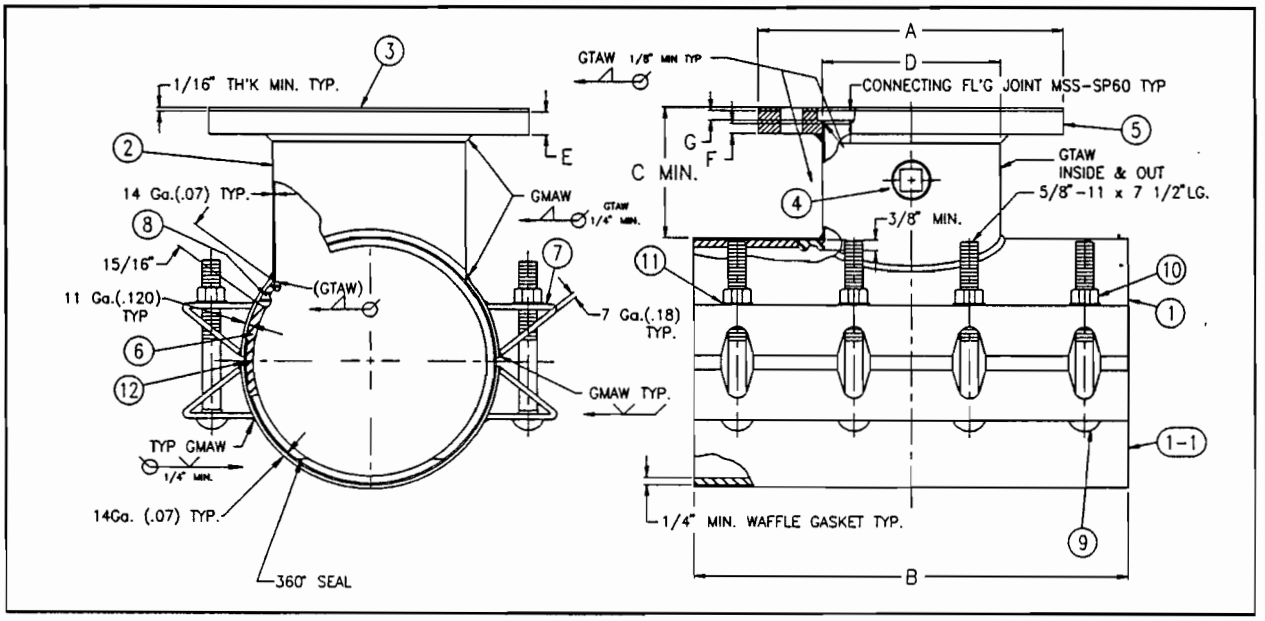

1	Top Shell	T-304 SST-11GA
1-1	Bottom Shell	T-304 SST-14GA
2	Branch	T-304 SS -14GA
3	Flange Gasket	Virgin SBR
4	Test Plug	T-304 SST 3/4" NPT
5	Flange	T-304 SST (or ASTM-A36) –ANSI/AWWA C-207 Class D-150/ANSI B-16.5-150 MISS-SP60
6	Mat Gasket	Virgin SBR
7	Lugs	T-304 SST-7GA
8	Branch Gasket	Virgin SBR W/ T-304 SST Ring
9	Bolts	18-8 SST 5/8"-11 x 7 1/2" NC Roll Thread
10	Nuts	18-8 SST 5/8" - 11 Heavy Hex Xylan Coated
11	Washer	18-8 SST
12	Armor Plate	T-304 SST-16GA

BRANCH	DIMENSIONS					NO. OF	RWP
SIZE	A	B	C	D	E	BOLTS	PSI
3	7.5"	12"	3.75"	3.5"	.75"	8	225
4	9	15	3.75	4.5	.75	10	225
6	11	15	4.25	6.5	.78	10	225
8	13.5	21	4.75	8.5	.84	14	225
10	16	27	5.25	10.5	.94	18	175
12	19	30	6.25	12.5	1.0	20	175

CST-EX TAPPING SLEEVE INSTALLATION INSTRUCTIONS

1. Verify pipe O.D. and sleeve range to insure proper sleeve is being installed.
2. Thoroughly clean entire pipe surface to be covered by the sleeve. Lubricate both sleeve gaskets and pipe surface.
3. Block pipe on either side of tap area to support during operations.
4. Place outlet shell on top of pipe with flange facing upward. Make sure gasket is clean and that the flaps extend fully.
5. Insert bolt through center most bolt hole. Place washer over threads and run down approximately two turns.
6. Insert second bolt directly opposite 1st bolt. Place washer and finger tighten both starter bolts.
7. Make sure gaskets are not rolled or folded.
8. Rotate the sleeve until the flange is in the desired position. Check gasket for distortion.
9. Insert remaining bolts and washers and tighten evenly working center to outside and side to side. MAINTAIN EVEN GAP BETWEEN LUGS. Recommended torque is 100 ft./lbs. min. 150 ft.//lbs. max.
10. Block outlet area to support during operations.
11. After attachment of valve use 3/4" test outlet to pressurize sleeve and check seals. Retorque nuts after tapping operation.

NOTE: FAILURE TO TEST ALL SEALS PRIOR TO TAP VOIDS ALL WARRANTIES.

CST-EXTRA HEAVY
SAMPLE SPECIFICATIONS

Tapping Sleeves shall be made from T-304 stainless steel and conform in all respects as follows:

1. Flange: Shall be T-304 SST in accordance with ANSI/AWWA C-207 Class D ANSI B-16.5 Cl.150 mating to ANSI B-16.1 Cl. 125 with recessed I.D. to accept tapping valves.
2. Flange Gasket: Shall be Virgin SBR full face type and shall be attached to flange with contact cement.
3. Branch: Shall be T-304 SST 14 ga. rolled to an I.D. .5 inches larger than the nominal flange size. The branch shall be TIG (GTAW) welded to the flange and the upper shell on the inside and MIG (GMAW) welded to the flange and upper shell on the outside.
4. Branch Shell: Shall be T-304 SST 11 ga. minimum rolled to size.
5. Back Shell: Shall be T-304 SST 14 ga. minimum rolled to size.
6. Bolt Lugs: Shall be T-304 SST 7 ga. formed in a triangular section to provide bearing surface for track head bolts. Lugs shall be MIG (GMAW) welded to shells at all contact points.
7. Bolts: Shall be T-304 / 18-8 SST 5/8" x 11 track head NC rolled thread. Each sleeve shall be provided with 7 1/2" long bolts with a minimum of 5" of threads.
8. Nuts: Shall be T-304 SST 5/8"–11" heavy hex with NC rolled threads tapped oversized .005". Nuts shall be coated with an anti-seizing material such as Xylan to prevent galling during tightening.
9. Bearing Washers: Shall be T-304/18-8 SST 5/8" x 1 1/4" x 1/16". Washers shall be placed under each nut to provide additional bearing surface.
10. Test Outlet: Shall be T-304 SST 3/4" NPT. Outlet shall be inserted through branch wall and TIG (GTAW) welded.
11. Test Plug: Shall be T-304 SST 3/4" NPT. Plug shall have Teflon tape on threads to assist sealing and prevent galling.
12. Branch Gasket: Shall be Virgin SBR with double O-Ring and hydraulic lip. Gasket shall have T-304 SST ring insert bonded within to prevent radial expansion under pressure.
13. Shell Gaskets: Shall be Virgin SBR with 1/4" grid pattern and tapered ends to provide a complete 360 degrees seal around the main pipe. Section of shell gasket that bridges gap between shells shall have a T-304 SST armor insert bonded. Armor shall be 3" wide (min.) and shall extend the entire length of the sleeve.
14. Welds: All welds shall be free from pinholes and other defects and shall be fully chemically passivated in accordance with ASTM A-380.
15. Testing: All sleeves shall be provided with a certification that they have been tested to 1.5 times the rated working pressure, and have passed, at the factory. Each sleeve shall have a predominate marking to designate the test.
16. Markings: Each sleeve shall bear indelible markings indicating
    1) Manufacturer's Name
    2) Part Number
    3) Date of Manufacture
    4) Serial Number
    5) Rated Working Pressure
    6) Test Pressure
17. Installation Instructions: Each sleeve shall have installation instructions attached.
18. Warranty: The manufacturer shall warrant the sleeves to be free from defects and to perform as advertised for a period of 10 years from the date of manufacture.
19. Tapping Sleeves: Shall be Style CST-EX as manufactured by Cascade Waterworks Mfg. Co. of Yorkville, IL or prior approved equal.

Milherst Construction, Inc.
P.O. Box 631
Getzville, New York 14068

Phone (716) 688-9098
Fax (716) 688-9562

Submittal No. 17

Lehigh Valley RR Derailment Site

Owner NYS Department of Environmental Conservation
Bureau of Construction Services, 12th Floor
625 Broadway
Albany, NY 12233-7013

Contractor Milherst Construction, Inc.
Date 12/18/01

Item: Service Saddles

Specification:

Section: 02630 -
Page No.: 02630 - 4
Para. No.: 2.08
Drawing No.: N/A
Location: N/A

I hereby certify that review, verification of products required, field dimentions, adjacent construction work and coordination of information, is in compliance with the requirements of the work and contract documents.

Approved By: Charles F. Kubinec

☒ **APPROVED**

☐ **APPROVED AS CORRECTED**
(Resubmit final copy for file)

☐ **REVISE AND RESUBMIT BEFORE PROCEEDING**

☐ **NOT APPROVED**

Review only for conformance with the design concept of the project and with information given in the Contract Documents. The Contractor is responsible for: verifying that dimensions are confirmed and correlated at the job site; obtaining information that pertains to the fabrication processes or to techniques of construction, and: coordinating the work of all subcontractors.
STEARNS & WHELER, LLC Engineers and Scientists

By TJF **Date** 1/2/02

Double Strap Saddles

Model 3825 & 3826

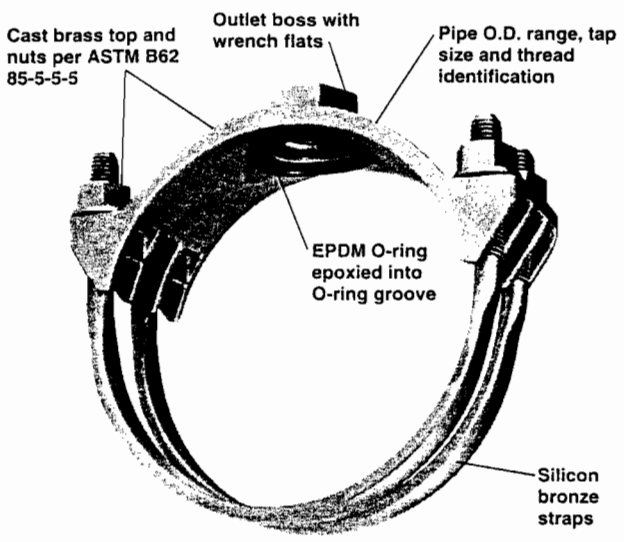

A.Y. McDonald Mfg. Co. Model 3825 and 3826 Double Strap Service Saddles are designed for use on service line connections to ductile iron, asbestos-cement or cast iron O.D. pipe water mains. The pressure capabilities equal, but do not exceed, the working pressure rating of the pipe, up to 200 PSIG.

Materials

Body - 85-5-5-5 cast brass per ASTM B62
Straps - Silicon bronze
Nuts with enlarged washer bearing surface
85-5-5-5 cast brass per ASTM B62

Sizes

Main Sizes: 4", 6", 8", 10" and 12"
Tap Sizes: 3/4", 1", 1 1/2", and 2" AWWA or NPT on 4", 6", 8", 10", and 12" Saddles
Contact factory for other tap sizes.

•**Outlet Style Color Code**
Green for AWWA threads
Yellow for NPT pipe threads

Notes

•All Saddles have pipe O.D. size identification.
•All A.Y. McDonald Service Saddles meet A.W.W.A. standards.
•Use on cold water services only.

SUBMITTAL
MILLERST CONSTRUCTION, INC.
Job: D004327
Item: Various
Descr: Service Saddles
Reviewed By: CFK
Date: 12/16/01

Order the correct saddles for your use from the following chart

For asbestos-cement or cast iron O.D. pipe Double Strap

NOMINAL SIZE	ACTUAL O.D. IN INCHES	MODEL 3825 Double Strap THREAD STYLE & TAP SIZE AWWA	MODEL 3826 Double Strap THREAD STYLE & TAP SIZE NPT
4"	4.74" - 5.40"	3/4", 1", 1 1/2", 2"	3/4", 1", 1 1/2", 2"
6"	6.84" - 7.50"	3/4", 1", 1 1/2", 2"	3/4", 1", 1 1/2", 2"
8"	8.99" - 9.67"	3/4", 1", 1 1/2", 2"	3/4", 1", 1 1/2", 2"
10"	11.04" - 12.12"	3/4", 1", 1 1/2", 2"	3/4", 1", 1 1/2", 2"
12"	13.14" - 14.58"	3/4", 1", 1 1/2", 2"	3/4", 1", 1 1/2", 2"

•Order Saddles by Model Number, Nominal Pipe Size and Tap Size. **Example: 3825 8" x 1"**

•Saddles with ***Green*** thread protectors have **AWWA** Tap Threads.
•Saddles with ***Yellow*** thread protectors have **NPT** Tap Threads.
•Contact factory for availability of BSPP taps.

Milherst Construction, Inc.
P.O. Box 631
Getzville, New York 14068

Phone (716) 688-9098
Fax (716) 688-9562

Submittal No. 18

Lehigh Valley RR Derailment Site

Owner NYS Department of Environmental Conservation
Bureau of Construction Services, 12th Floor
625 Broadway
Albany, NY 12233-7013

Contractor Milherst Construction, Inc
Date 12/18/01

Item: 1" Corporation stops

Specification:

Section: 02630
Page No.: 02630-2
Para. No.: 2.02
Drawing No.: N/A
Location: N/A

I hereby certify that review, verification of products required, field dimentions, adjacent construction work and coordination of information, is in compliance with the requirements of the work and contract documents.

Approved By: Charles J. Kubinec

☒ **APPROVED**

☐ **APPROVED AS CORRECTED**
(Resubmit final copy for file)

☐ **REVISE AND RESUBMIT BEFORE PROCEEDING**

☐ **NOT APPROVED**

Review only for conformance with the design concept of the project and with information given in the Contract Documents. The Contractor is responsible for: verifying that dimensions are confirmed and correlated at the job site; obtaining information that pertains to the fabrication processes or to techniques of construction, and: coordinating the work of all subcontractors.
STEARNS & WHELER, LLC Engineers and Scientists

By TJF Date 1/2/02

Copper Flare • Plug Valves

4701

With 4700 Tube Nut
Inlet: AWWA standard thread
Outlet: Copper flare
1/2", 5/8" x 3/4", 3/4", 3/4" x 1", 1", 1 1/4", 1 1/2", 1 1/2" x 2", 2"

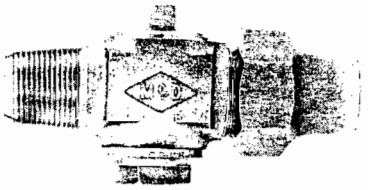

4704

With 4700 Tube Nut
Inlet: Male iron pipe thread
Outlet: Copper flare
1/2", 3/4", 3/4" x 1", 1", 1 1/4", 1 1/2", 2"

- When ordering the 4701 or 4704 less Tube Nut please specify 4701L or 4704L
- For 4701 with internal driving thread (4702), contact factory.
- See page 14, 15, 16 for companion couplings

"T" Compression • Plug Valves

4701T

With Compression Nut, gasket and gripper
Inlet: AWWA standard thread
Outlet: *Tube compression
~~5/8" x 3/4", 3/4", 3/4" x 1~~", 1", ~~1" x 1 1/4", 1 1/4", 1 1/2", 2"~~

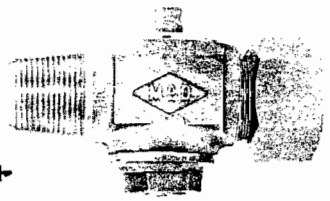

- Add "E" to model number for nut with electrical continuity

4704T

With Compression Nut, gasket and gripper
Inlet: Male iron pipe thread
Outlet: *Tube compression
3/4", 3/4" x 1", 1", 1" x 1 1/4", 1 1/4", 1 1/2", 2"

SUBMITTAL
MILHERST CONSTRUCTION, INC.
Job: D004327
Item: Services
Descr: 1" Corporation
Reviewed By: CFK
Date: 12/18/01

4701-3T

With Comp. Nut and gasket
Inlet: AWWA standard thread
Outlet: *Iron pipe size comp. for P.E.
3/4", 1"

4704-3T

With Comp. Nut and gasket
Inlet: Male iron pipe thread
Outlet: *Iron pipe size comp. for P.E.
3/4", 1"

Mac-Pak Compression • Plug Valves

4701-22

With Comp. Nut and gasket
Inlet: AWWA standard thread
Outlet: *Tube compression
5/8" x 3/4", 3/4", 3/4" x 1", 1", 1" x 1 1/4", 1 1/2", 2"

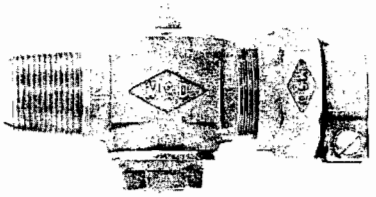

4704-22

With Comp. Nut and gasket
Inlet: Male iron pipe thread
Outlet: *Tube compression
3/4", 3/4" x 1", 1", 1" x 1 1/4", 1 1/4", 1 1/2", 2"

4701-33

With Comp. Nut and gasket
Inlet: AWWA standard thread
Outlet: *Iron pipe size comp. for P.E.
3/4", 1"

4704-33

With Comp. Nut and gasket
Inlet: Male iron pipe thread
Outlet: *Iron pipe size comp. for P.E.
3/4", 1"

4701-44

With Comp. Nut and gasket
Inlet: AWWA standard thread
Outlet: Pipe size comp. for PVC
3/4", 1"

4704-44

With Comp. Nut and gasket
Inlet: Male iron pipe thread
Outlet: Pipe size comp. for PVC
3/4", 1"

4701-55

With Comp. Nut and gasket
Inlet: AWWA standard thread
Outlet: Steel pipe comp.
3/4", 1"

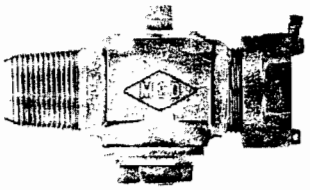

4704-55

With Comp. Nut and gasket
Inlet: Male iron pipe thread
Outlet: Steel pipe comp.
3/4", 1"

*Insert stiffeners are **required** on all flexible plastic connections, see page 3.
•For drilling and tapping machine adapters, see pages 4-5.

Milherst Construction, Inc.
P.O. Box 631
Getzville, New York 14068

Phone (716) 688-9098
Fax (716) 688-9562

Submittal No. 19

Lehigh Valley RR Derailment Site

Owner NYS Department of Environmental Conservation
Bureau of Construction Services, 12th Floor
625 Broadway
Albany, NY 12233-7013

Contractor Milherst Construction, Inc
Date 12/18/01

Item: 1½" -2" Corporation stops

Specification:

Section: 02630
Page No.: 02630-2
Para. No.: 2.04
Drawing No.: N/A
Location: N/A

I hereby certify that review, verification of products required, field dimentions, adjacent construction work and coordination of information, is in compliance with the requirements of the work and contract documents.

Approved By: Charles T. Kubinec Jr.

- If A.Y. McDonald is being used the following models must be used.

1½" - Model 3128B

2" - Model 3121B

☐ **APPROVED**

☐ **APPROVED AS CORRECTED**
(Resubmit final copy for file)

☒ **REVISE AND RESUBMIT BEFORE PROCEEDING**

☐ **NOT APPROVED**

Review only for conformance with the design concept of the project and with information given in the Contract Documents. The Contractor is responsible for: verifying that dimensions are confirmed and correlated at the job site; obtaining information that pertains to the fabrication processes or to techniques of construction, and: coordinating the work of all subcontractors.
STEARNS & WHELER, LLC Engineers and Scientists

By TJF Date 1/2/02

Copper Flare • Ball Valves

•All Ball Corporation Stops are rated 300 PSI

4701B
With 4700 Tube Nut
Inlet: AWWA standard thread
Outlet: Copper flare
3/4", 3/4" x 1", 1", 1" x 1 1/4"*, 1 1/2", 2"

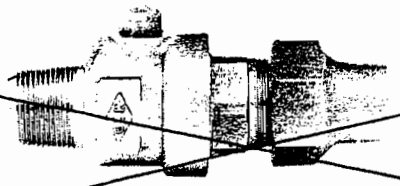

4704B
With 4700 Tube Nut
Inlet: Male iron pipe thread
Outlet: Copper flare
3/4", 3/4" x 1", 1", 1 1/2", 2"

*Size 1" x 1 1/4" only does not meet AWWA C-800 envelope requirements. Will not fit in tapping machines.
•When ordering the **4701B or 4704B Less Tube Nut** please specify **4701BL or 4704BL**
•**See Page 14, 15, 16 for companion couplings**

"T" Compression • Ball Valves

4701BT
With Compression Nut, gasket and gripper
Inlet: AWWA standard thread
Outlet: *Tube compression
3/4", 3/4" x 1", 1", 1" x 1 1/4", 1 1/2", 1 1/2"x2", 2"
•**Add "E" to model number for nut with electrical continuity**

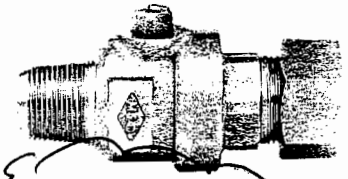

4704BT
With Compression Nut, gasket and gripper
Inlet: Male iron pipe thread
Outlet: *Tube compression
3/4", 3/4" x 1", 1", 1" x 1 1/4", 1 1/2", 1 1/2"x2", 2"

4701B-3T
With Comp. Nut and gasket
Inlet: AWWA standard thread
Outlet: *Pipe size comp. for P.E.
3/4", 1"

4704B-3T
With Comp. Nut and gasket
Inlet: Male iron pipe thread
Outlet: *Pipe size comp. for P.E.
3/4", 1"

SUBMITTAL
MILHERST CONSTRUCTION, INC.
Job: D004327
Item: Corporation Stop
Descr: 1/2" & 2"
Reviewed By: CFK
Date: 12/19/01

Mac-Pak Compression • Ball Valves

4701B-22
With Comp. Nut and gasket
Inlet: AWWA standard thread
Outlet: *Tube compression
3/4", 3/4" x 1", 1", 1" x 1 1/4", 1 1/2", 1 1/2"x2", 2"

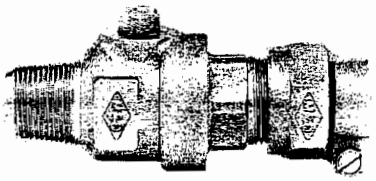

4704B-22
With Comp. Nut and gasket
Inlet: Male iron pipe thread
Outlet: *Tube compression
3/4", 3/4" x 1", 1", 1" x 1 1/4", 1 1/2", 1 1/2"x2", 2"

4701B-33
With Comp. Nut and gasket
Inlet: AWWA standard thread
Outlet: *Pipe size comp. for P.E.
3/4", 1", 1 1/2", 2"

4704B-33
With Comp. Nut and gasket
Inlet: Male iron pipe thread
Outlet: *Pipe size comp. for P.E.
3/4", 1", 1 1/2", 2"

4701B-44
With Comp. Nut and gasket
Inlet: AWWA standard thread
Outlet: Pipe size comp. for PVC
3/4", 1", 1 1/2", 2"

4704B-44
With Comp. Nut and gasket
Inlet: Male iron pipe thread
Outlet: Pipe size comp. for PVC
3/4", 1", 1 1/2", 2"

4701B-55
With Comp. Nut and gasket
Inlet: AWWA standard thread
Outlet: Steel pipe comp.
3/4", 1"

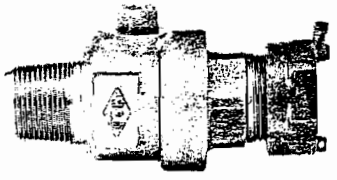

4704B-55
With Comp. Nut and gasket
Inlet: Male iron pipe thread
Outlet: Steel pipe comp.
3/4", 1"

*Insert stiffeners are **required** on all flexible plastic connections, see page 3.
•For drilling and tapping machine adapters, see pages 4-5.

Milherst Construction, Inc.
P.O. Box 631
Getzville, New York 14068

Phone (716) 688-9098
Fax (716) 688-9562

Submittal No.19-Rev.1

Lehigh Valley RR Derailment Site

Owner NYS Department of Environmental Conservation
Bureau of Construction Services, 12th Floor
625 Broadway
Albany, NY 12233-7013

Contractor Milherst Construction, Inc
Date January 17, 2002

Item: 1-1/2" & 2" Corporation Stops

Note the following:
A.Y McDonald will be used.
Model 3128B for 1-1/2"
Model 3121B for 2"

Specification:
Section: 02630
Page No.: 02630-2
Para. No.: 2.04
Drawing No.: N/A
Location: As Required

Milherst Construction, Inc. certifies that all quantities, dimensions, specified performance criteria, installation requirements, materials, catalog numbers, and similar data with respect thereto have been reviewed or that each Shop Drawing or sample has been coordinated with other Shop Drawings and samples and with the requirements of the Work and Contract Documents.

By: Charles F. Kubiniec

Charles F. Kubiniec
Project Manager

☒ **APPROVED**
☐ **APPROVED AS CORRECTED**
(Resubmit final copy for file)
☐ **REVISE AND RESUBMIT BEFORE PROCEEDING**
☐ **NOT APPROVED**

Review only for conformance with the design concept of the project and with information given in the Contract Documents. The Contractor is responsible for: verifying that dimensions are confirmed and correlated at the job site; obtaining information that pertains to the fabrication processes or to techniques of construction, and: coordinating the work of all subcontractors.
STEARNS & WHELER, LLC Engineers and Scientists

By JRP Date 1/24/2

Threaded Outlet • Plug Valves

MILHERST CONSTRUCTION INC.
Submittal 19-Rev. 1
1-17-02
CFK

3120
No Coupling
Inlet: AWWA standard thread
Outlet: Special purpose coupling thread
(Has internal driving thread)
5/8", 3/4", 1"

3121 or 3122
No Coupling
Inlet: 3121 AWWA standard thread
Inlet: 3122 Male iron pipe thread
Outlet: Increasing male iron pipe thread
(Has internal driving thread)
1/2", 5/8", 3/4", 1", 1 1/4", 1 1/2", 2"

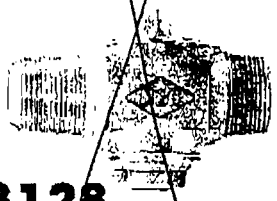

3128
No Coupling
Inlet: AWWA standard thread
Outlet: Male iron pipe thread
3/4", 1", 1 1/4"

3131
No Coupling
Inlet: Male iron pipe thread
Outlet: Male iron pipe thread
3/4", 1", 1 1/4", 1 1/2", 2"

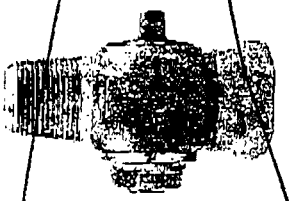

3148 or 3149
No Coupling
Inlet: 3148 AWWA standard thread
Inlet: 3149 Male iron pipe thread
Outlet: Female iron pipe thread
(wrench hex on outlet)
3/4", 1"

3152
No Coupling
Inlet: Male iron
(wrench hex on inlet)pipe thread
Outlet: Male iron pipe thread
3/4", 1"

•See page 12 and 13 for companion couplings

Threaded Outlet • Ball Valves

3128B for 1½"
No Coupling
Inlet: AWWA standard thrd.
Outlet: Male iron pipe thrd.
3/4", 1", 1 1/2", 2"

3131B
No Coupling
Inlet: Male iron pipe thrd.
Outlet: Male iron pipe thrd.
3/4", 1", 1 1/2", 2"

3121B for 2"

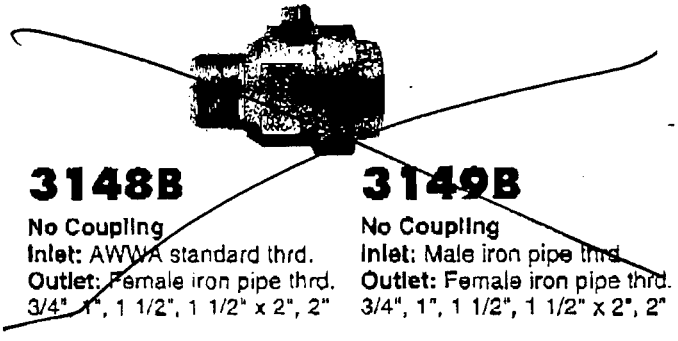

3148B
No Coupling
Inlet: AWWA standard thrd.
Outlet: Female iron pipe thrd.
3/4", 1", 1 1/2", 1 1/2" x 2", 2"

3149B
No Coupling
Inlet: Male iron pipe thrd.
Outlet: Female iron pipe thrd.
3/4", 1", 1 1/2", 1 1/2" x 2", 2"

•See page 13 for companion couplings

Milherst Construction, Inc.
P.O. Box 631
Getzville, New York 14068

Phone (716) 688-9098
Fax (716) 688-9562

Submittal No. 20

Lehigh Valley RR Derailment Site

Owner NYS Department of Environmental Conservation
Bureau of Construction Services, 12th Floor
625 Broadway
Albany, NY 12233-7013

Contractor Milherst Construction, Inc
Date 12/19/01

Item: Copper tubing all sizes required

Specification:

Section: 02630
Page No.: 02630-2
Para. No.: 2.01
Drawing No.: N/A
Location: N/A

I hereby certify that review, verification of products required, field dimentions, adjacent construction work and coordination of information, is in compliance with the requirements of the work and contract documents.

Approved By: Charles T. Kubmec

☒ APPROVED

☐ APPROVED AS CORRECTED
(Resubmit final copy for file)

☐ REVISE AND RESUBMIT BEFORE PROCEEDING

☐ NOT APPROVED

Review only for conformance with the design concept of the project and with information given in the Contract Documents. The Contractor is responsible for: verifying that dimensions are confirmed and correlated at the job site; obtaining information that pertains to the fabrication processes or to techniques of construction, and: coordinating the work of all subcontractors.
STEARNS & WHELER, LLC Engineers and Scientists

By TJF Date 12/28/01

LeRan Copper & Brass, Inc.
A Waxman Company

300 Jay Street, PO Box 40 - Coldwater, Michigan 49036
Telephone (517) 279-9701

To Whom It May Concern:

Please be advised that all copper tubing which we furnish conforms to federal specifications WWT-775B, WWT-779B and ASTM specifications B75 for seamless copper tube, B251 for general requirements for wrought seamless copper alloy tube, and B88, as amended, relative to types K, L and M.

All refrigeration copper meets the ASTM B280, B75 and B68. It also meets the SAE standard CA122.

All copper drainage tube (DWV) meets ASTM B306.

All "ACR" tubing which we furnish conforms to ASTM specification B-280, B75 and B88.

"ACR" tubing is cleaned in accordance with one of the approved vapor degreasing methods set forth in the Copper Development Standards handbook.

All copper tubing which we distribute is manufactured in the United States, our principal being Halstead Metal Products.

LeRan Copper & Brass, Inc.

By John P. Tracy
John P. Tracy
National Sales Manager

SUBMITTAL
MIDWEST CONSTRUCTION, INC.
Job: Contract 0004327
Item: Water Services
Descr: Copper Tubing
Reviewed By: CFK
Date: 12/19/01

Milherst Construction, Inc.
P.O. Box 631
Getzville, New York 14068

Phone (716) 688-9098
Fax (716) 688-9562

Submittal No. 21

Lehigh Valley RR Derailment Site

Owner NYS Department of Environmental Conservation
Bureau of Construction Services, 12th Floor
625 Broadway
Albany, NY 12233-7013

Contractor Milherst Construction, Inc
Date 12/19/01

Item: Service Coupling

Specification:

Section: 02630
Page No.: 02630-4
Para. No.: 2.09
Drawing No.: N/A
Location: N/A

I hereby certify that review, verification of products required, field dimentions, adjacent construction work and coordination of information, is in compliance with the requirements of the work and contract documents.

Approved By: Charles T. Kubinec Jr.

☒ **APPROVED**

☐ **APPROVED AS CORRECTED**
(Resubmit final copy for file)

☐ **REVISE AND RESUBMIT BEFORE PROCEEDING**

☐ **NOT APPROVED**

Review only for conformance with the design concept of the project and with information given in the Contract Documents. The Contractor is responsible for: verifying that dimensions are confirmed and correlated at the job site; obtaining information that pertains to the fabrication processes or to techniques of construction, and: coordinating the work of all subcontractors.
STEARNS & WHELER, LLC Engineers and Scientists

By TJF **Date** 1/2/02

Straight Couplings

NEW!

SIZES AVAILABLE			4758	4758T	4758-3T	4758Q
Size	NUT	NUT	FLARE x FLARE	T CTS Comp x T CTS Comp	3T PEP Comp x 3T PEP Comp	Q CTS Comp x Q CTS Comp
1/2"	1/2"	1/2"	●			
3/4"	3/4"	3/4"	●	●	●	●
3/4" x 1"	3/4"	1"	●	●	●	●
3/4" x 1¼"	3/4"	1¼"		● ✧		
1"	1"	1"	●	●	●	●
1¼"	1¼"	1¼"	●	●		● ✱
1¼" x 1"	1¼"	1"		●		● ✱
1½"	1½"	1½"	●	●		●
2"	2"	2"	●	●		●

✱ These sizes will be available 6/01

✧ **Note:** Add "E" to end of model number for electrical continuity feature

SUBMITTAL
MILHERST CONSTRUCTION, INC.
Job: Contract D004327
Item: Water Services
Descr: Unions
Reviewed By: CFK
Date: 12/10/01

SIZES AVAILABLE			4758-22	4758-33	4758-44	4758-55
Size	NUT	NUT	22 CTS Comp x 22 CTS Comp	33 PEP Comp. x 33 PEP Comp.	44 Comp. PVC x 44 Comp. PVC	55 IP Comp. x 55 IP Comp.
1/2"	1/2"	1/2"	●			
1/2" x 3/4"	1/2"	3/4"	●			
3/4"	3/4"	3/4"	●	●	●	●
3/4" x 1"	3/4"	1"	●	●	●	●
3/4" x 1¼"	3/4"	1¼"	●			
1"	1"	1"	●	●	●	●
1¼"	1¼"	1¼"	●	●	●	
1¼" x 1"	1¼"	1"	●			
1½"	1½"	1½"	●	●	●	
2"	2"	2"	●	●	●	●

SIZES AVAILABLE			4758C-22	4758C-33	4758C-44	4758C-55
Size	NUT	NUT	FLARE x 22 CTS Comp	FLARE x 33 PEP Comp.	FLARE x 44 PVC Comp.	FLARE x IP Comp.
3/4"	3/4"	3/4"	●	●	●	●
1"	1"	1"		●	●	

Shown here is our basic line of service fittings. Other combinations not shown in this catalog may be available. Contact us for more information

*Insert stiffeners are **required** on all flexible plastic connections. See page 5.

Milherst Construction, Inc.
P.O. Box 631
Getzville, New York 14068

Phone (716) 688-9098
Fax (716) 688-9562

Submittal No. 22

Lehigh Valley RR Derailment Site

Owner NYS Department of Environmental Conservation
Bureau of Construction Services, 12th Floor
625 Broadway
Albany, NY 12233-7013

Contractor Milherst Construction, Inc
Date 12/19/01

Item: Curb stop

Specification:

Section: 02630
Page No.: 02630-2, 02630-3
Para. No.: 2.03, 2.05
Drawing No.: N/A
Location: N/A

I hereby certify that review, verification of products required, field dimentions, adjacent construction work and coordination of information, is in compliance with the requirements of the work and contract documents.

Approved By: Charles T. Kubmiec

☒ APPROVED

☐ APPROVED AS CORRECTED
(Resubmit final copy for file)

☐ REVISE AND RESUBMIT BEFORE PROCEEDING

☐ NOT APPROVED

Review only for conformance with the design concept of the project and with information given in the Contract Documents. The Contractor is responsible for: verifying that dimensions are confirmed and correlated at the job site; obtaining information that pertains to the fabrication processes or to techniques of construction, and: coordinating the work of all subcontractors.
STEARNS & WHELER, LLC Engineers and Scientists

By TJF Date 12/28/01

Regular Pattern Ball Valves - 300 PSIG Water

Ball Valve Sizes

■ Size **3/4 x 5/8 x 3/4** *means:*

3/4	x	5/8	x	3/4
INLET		BALL SIZE		OUTLET

■ Size **3/4** *means:*

3/4	x	3/4	x	3/4
INLET		BALL SIZE		OUTLET

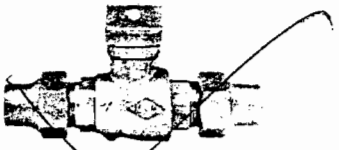

6100 • 6100W

Flare x Flare

FLATHEAD	LOCKWING
3/4 x 5/8 x 3/4	3/4 x 5/8 x 3/4
3/4	3/4
1 x 3/4 x 3/4	1 x 3/4 x 3/4
1 x 3/4 x 1	1 x 3/4 x 1
1	1
1¼ x 1 x 1	1¼ x 1 x1
1¼ x 1 x 1¼	--
1½	--
2	2

6100T* • 6100WT*

Tube Comp. x Tube Comp.

FLATHEAD	LOCKWING
3/4 x 5/8 x 3/4	3/4 x 5/8 x 3/4
3/4	3/4
1 x 3/4 x 3/4	1 x 3/4 x 3/4
1 x 3/4 x 1	1 x 3/4 x 1
1	1
1¼ x 1 x 1	1¼ x 1 x1
1¼ x 1 x 1¼	--
1½	--
2	2

•For electrical or anode continuity nut configurations, contact factory

6100-3T* • 6100W-3T*

IPS Comp. for P.E. x IPS Comp. for P.E.

FLATHEAD	LOCKWING
3/4	3/4
1	--
3/4 x 1 x 1	3/4 x 1 x 1

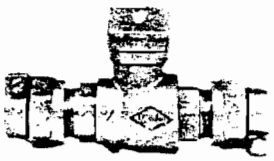

6100-22* • 6100W-22*

Tube Comp. x Tube Comp.

FLATHEAD	LOCKWING
3/4 x 5/8 x 3/4	3/4 x 5/8 x 3/4
3/4	3/4
1 x 3/4 x 3/4	1 x 3/4 x 3/4
1 x 3/4 x 1	1 x 3/4 x 1
1	1
1¼ x 1 x 1	1¼ x 1 x1
1¼ x 1 x 1¼	--
1½	--
2	2

6100-33* • 6100W-33*

IPS Comp. for P.E. x IPS Comp. for P.E.

FLATHEAD	LOCKWING
3/4	3/4
1	--
3/4 x 1 x 1	3/4 x 1 x 1
1¼ x 1½ x 1¼	--
1½ x 2 x 1½	1½ x 2 x 1½
2	2

6100-44 • 6100W-44

IPS Comp. for PVC x IPS Comp. for PVC

FLATHEAD	LOCKWING
3/4	3/4
1	--
3/4 x 1 x 1	3/4 x 1 x 1
1¼ x 1½ x 1¼	--
1½	--
2	2

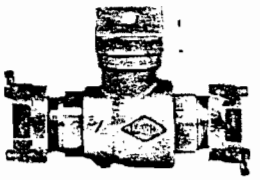

6100-55 • 6100W-55

IPS-Steel Pipe x IPS-Steel Pipe

FLATHEAD	LOCKWING
3/4	3/4
1	--
3/4 x 1 x 1	3/4 x 1 x 1

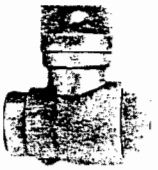

6101 • 6101W

FIP x FIP

FLATHEAD	LOCKWING
	1/2 x 5/8 x 1/2
3/4 x 5/8 x 3/4	3/4 x 5/8 x 3/4
3/4	3/4
1 x 3/4 x 3/4	1 x 3/4 x 3/4
1 x 3/4 x 1	1 x 3/4 x 1
1	1
1¼ x 1 x 1	1¼ x 1 x1
1¼ x 1 x 1¼	--
1½	1½
2	2
2½ x 2 x 2½	

6107 • 6107W

FIP x MIP

FLATHEAD	LOCKWING
3/4	3/4
1	1
1½	1½
2	2

SUBMITTAL

MILHERST CONSTRUCTION, INC.

Job: Contract D00H327

Item: Water Services

Descr: Curb Stop's

Reviewed By: CFK

Date: 12/19/01

*Insert stiffeners are **required** on all flexible plastic connections, see page 3.

•For 360° rotation, add #1 in third space of model number. **Example: 6100 becomes 6110.** See Price List or contact factory.

•For cross type ball valve, contact factory. **Example: 6100-22-33 3/4.**

•For MIP x Flare/Comp. valves, contact factory.

•Special lengths available. Contact factory.

Milherst Construction, Inc.
P.O. Box 631
Getzville, New York 14068

Phone (716) 688-9098
Fax (716) 688-9562

Submittal No. 23

Lehigh Valley RR Derailment Site

Owner NYS Department of Environmental Conservation
Bureau of Construction Services, 12th Floor
625 Broadway
Albany, NY 12233-7013

Contractor Milherst Construction, Inc
Date 12/19/01

Item: Curb Box

Specification:

Section: 02630
Page No.: 02630-3
Para. No.: 2.06
Drawing No.: N/A
Location: N/A

I hereby certify that review, verification of products required, field dimentions, adjacent construction work and coordination of information, is in compliance with the requirements of the work and contract documents.

Approved By: Charles J. Kubinec

☒ **APPROVED**

☐ **APPROVED AS CORRECTED**
(Resubmit final copy for file)

☐ **REVISE AND RESUBMIT BEFORE PROCEEDING**

☐ **NOT APPROVED**

Review only for conformance with the design concept of the project and with information given in the Contract Documents. The Contractor is responsible for: verifying that dimensions are confirmed and correlated at the job site; obtaining information that pertains to the fabrication processes or to techniques of construction, and: coordinating the work of all subcontractors.
STEARNS & WHELER, LLC Engineers and Scientists

By TJF Date 12/28/01

Arch Pattern

Use with 1/2" through 2" Curb Stops

5601

1" Upper section, complete with shut-off rod
5601L Lid - 2 hole Erie pattern, threaded 1"
- Use with regular pattern inverted plug curb stops 1/2", 5/8", 3/4", 1"
- Use with regular pattern ball valves 5/8", 3/4", 1" (ball size)

5602

1" Upper section, complete with shut-off rod
5607L Lid - with 1" pentagon plug in lid
- Use with regular pattern inverted plug curb stops 1 1/4", 1 1/2", 2"
- Use with regular pattern ball valves 1 1/2", 2" (ball size)

5603

1" Upper section, complete with shut-off rod
5601L Lid - 2 hole Erie pattern, threaded 1"
- Use with regular pattern inverted plug curb stops 1 1/4", 1 1/2", 2"
- Use with regular pattern ball valves 1 1/2", 2" (ball size)

5604

* **1 1/4" Upper section,** shut-off rod available, but not furnished
* **5614L Lid -** with 1 1/4" pentagon plug in lid
- Use with regular pattern inverted plug curb stops 1/2", 5/8", 3/4", 1"
- Use with regular pattern ball valves 5/8", 3/4", 1" (ball size)

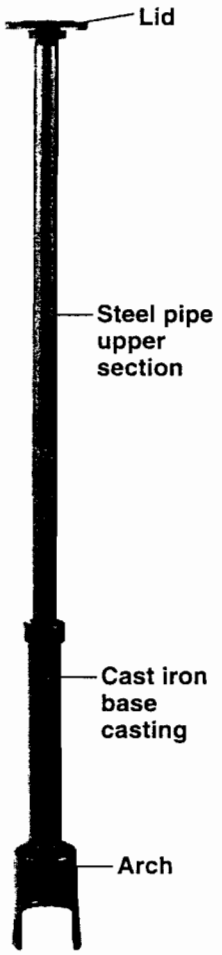

5605

1 1/2" Upper section, shut-off rod available, but not furnished
5623L Lid - with 1 1/2" pentagon plug in lid
- Use with regular pattern inverted plug curb stops 1/2", 5/8", 3/4", 1"
- Use with regular pattern ball valves 5/8", 3/4", 1" (ball size)

5606

2" Upper section, shut-off rod available, but not furnished
5624L Lid - with 2" pentagon plug in lid
- Use with regular pattern inverted plug curb stops 1 1/4", 1 1/2", 2"
- Use with regular pattern ball valves 1 1/2", 2" (ball size)

5607

1" Upper section, complete with shut-off rod
5607L Lid - with 1" pentagon plug in lid
- Use with regular pattern inverted plug curb stops 1/2", 5/8", 3/4", 1"
- Use with regular pattern ball valves 5/8", 3/4", 1" (ball size)

SUBMITTAL
MILHERST CONSTRUCTION, INC.
Job: Contract D004327
Item: Water Services
Descr: Curb Box
Date: 12/19/01

Lids

5601L
Tapped 1"

5607L
Tapped 1"

*

5614L
Tapped 1 1/4"
See page 8 for details

5623L
Tapped 1 1/2"

5624L
Tapped 2"

Notes

- Available Curb Box extended lengths: 2 1/2', 3', 3 1/2', 4', 4 1/2', 5', 5 1/2', 6', 6 1/2', 7', 7 1/2', 8', 8 1/2', 9', 9 1/2', 10'.
- Order by model number and maximum extended length.
- All Curb Boxes telescope one foot. Lengths shown are at maximum extension:
  Example: A 5' Curb Box can be used at depths ranging from 4' to 5'.

Milherst Construction, Inc.
P.O. Box 631
Getzville, New York 14068

Phone (716) 688-9098
Fax (716) 688-9562

Submittal No. 24

Lehigh Valley RR Derailment Site

Owner NYS Department of Environmental Conservation
Bureau of Construction Services, 12th Floor
625 Broadway
Albany, NY 12233-7013

Contractor Milherst Construction, Inc
Date 12/19/01

Item: Type 5 Select Fill
Flowable Fill

Specification:

Section: 02670 02230
Page No.: 02670 - 3 02230 - 3
Para. No.: 2.01 F 2.01 E
Drawing No.: CDF Flowable Fill 50 to 100 PSI.
Location: Fill between carrier and casing @ Bores

I hereby certify that review, verification of products required, field dimentions, adjacent construction work and coordination of information, is in compliance with the requirements of the work and contract documents.

Approved By: Charles F. Kubinec

☒ APPROVED
☐ APPROVED AS CORRECTED
(Resubmit final copy for file)
☐ REVISE AND RESUBMIT BEFORE PROCEEDING
☐ NOT APPROVED

Review only for conformance with the design concept of the project and with information given in the Contract Documents. The Contractor is responsible for: verifying that dimensions are confirmed and correlated at the job site; obtaining information that pertains to the fabrication processes or to techniques of construction, and: coordinating the work of all subcontractors.
STEARNS & WHELER, LLC Engineers and Scientists

By TJF Date 12/28/01

NORTHRUP MATERIALS

DIVISION OF ROCHESTER ASPHALT MATERIALS

West Side Location:
58 Owens Rd. PO Box K55
Brockport, New York 14420
(716) 637-3939

East Side Location:
5929 Loomis Road
Farmington, NY 14425
(716) 924-7360

November 30, 2001

Millhurst Construction, Inc.
2601 Millersport Highway
Getzville, NY 14068

Attention: Jim Collins

Subject: Lehigh Valley Railroad
Derailment Water Project, Leroy

The following is the mix design and materials that we propose to furnish to the above referenced project.

MIX ID:	CLSM-MCWA
Strength @ 28 Days	350 PSI
Cement (lbs/cy)	300 lbs
Fine Aggregate (lbs/cy)	2900 lbs
Water (gals/cy)	55 gals
Water/Cement Ratio	1.52

Spec's require 50 to 100 PSI

MATERIALS:

Cement: Type I/II Portland, supplied by LaFarge Corp.
Conforms to ASTM C-150

Fine Aggregate: Elam Sand & Gravel, Ionia, NY
NYSDOT Test No. 99 AF 80, Source No. 4-60F

Respectfully Submitted,

Jerry Mancuso

Jerry Mancuso
Sales Manager

SUBMITTAL
MILHERST CONSTRUCTION, INC
Job: Contract D004327
Item: Flowable Fill for
Descr: Casing filler
Reviewed By: CFK
Date: 12/19/01

Type 5 Select Fill

LAFARGE CANADA INC.

CEMENT MILL TEST REPORT

Period Represented: September 2001
Plant: BATH
Cement Type: I

PHYSICAL DATA		CHEMICAL DATA	Percent
Specific Surface (Blaine) (sq.m./ kg.).....	363	Silicon Dioxide (SiO2).....	20.9
Percent Passing 325 Mesh....	97.0	Aluminum Oxide (Al2O3).....	4.4
Compressive Strength (psi)		Ferric Oxide (Fe2O3).....	3.1
		Calcium Oxide (CaO).....	63.8
Mortar Cubes		Magnesium Oxide (MgO).....	2.3
3 day...	3920	Sulphur Trioxide (SO3).....	2.7
7 day...	4790		
Previous 28 day...	5690	Loss on Ignition.....	1.1
		Insoluble Residue.....	0.47
Vicat Time Of Set (min.)	123		
		Free Lime.....	0.7
Air Content (%).....	7.0	Tricalcium Silicate (C3S)...	59.1
Autoclave Expansion (%).....	0.04	Tricalcium Aluminate (C3A)..	6.5
		Total Alkali as Sodium Oxide	0.63

CERTIFIED BY: Lisa McEvoy
Quality Control Technician

We hereby certify that the above described cement, at the time of shipment, complies with the chemical and physical requirements of the ASTM C-150-00 and AASHTO M85
This mill test represents a monthly average.

CEMENT GROUP / BATH PLANT
P.O. Box 160, Bath, Ontario K0H 1G0
Telephone: (613) 352-7711 Fax: (613) 352-5109

Printed on Recycled Paper

LAFARGE CANADA INC. CEMENT MILL TEST REPORT

Period Represented: September 2001
Plant: BATH
Cement Type: II

PHYSICAL DATA		CHEMICAL DATA	Percent
Specific Surface (Blaine) (sq.m./ kg.).....	363	Silicon Dioxide (SiO_2).....	20.9
Percent Passing 325 Mesh....	97.0	Aluminum Oxide (Al_2O_3).....	4.4
Compressive Strength (psi)		Ferric Oxide (Fe_2O_3).....	3.1
		Calcium Oxide (CaO).....	63.8
Mortar Cubes		Magnesium Oxide (MgO).....	2.3
3 day...	3920	Sulphur Trioxide (SO_3).....	2.7
7 day...	4790		
Previous 28 day...	5690	Loss on Ignition.....	1.1
		Insoluble Residue.....	0.47
Vicat Time Of Set (min.)	123		
		Free Lime.....	0.7
Air Content (%).....	7.0	Tricalcium Silicate (C_3S)...	59.1
Autoclave Expansion (%).....	0.04	Tricalcium Aluminate (C_3A)..	6.5
		Total Alkali as Sodium Oxide	0.63

CERTIFIED BY: Lisa McEvoy
Quality Control Technician

We hereby certify that the above described cement, at the time of shipment, complies with the chemical and physical requirements of the ASTM C-150-00
This mill test represents a monthly average.

CEMENT GROUP / BATH PLANT
P.O. Box 160, Bath, Ontario K0H 1G0
Telephone. (613) 352-7711 Fax: (613) 352-5109

Printed on Recycled Paper

FEB 1 5 2000

ELAM SAND & GRAVEL

8222 Routes 5&20 • P.O. Box 65 • West Bloomfield, New York 14585
(716) 657-8001 • Fax (716) 657-6575 • Dispatch (716) 657-8000
Est. 1892
" Over 100 Years of Quality and Service"

February 11, 2000

Northrup Materials
P.O. Box # K 55
Brockport, N.Y. 14420

Attn: David Scott

RE: Material Certification for Concrete Sand

Dear Mr. Scott:

Please be advised that the concrete sand produced by Elam d Sand and Gravel Corp. (ELAM) at the **Route 64 Plant-Ionia, New York** is produced in accordance with the New York State Department of Transportation, (NYS-DOT) "Standards and Specifications Handbook" (Handbook) dated Janaury 2, 19995 and meets or exceeds the specification in section 703-01 contained therein.

The NYS-DOT source number for this plant is **4-60F** and the test number for fine aggregate is **99AF80**.

The NYS-DOT approval letters indicating the same have been enclosed for your review.

This is the material which will be supplied to your **Farmington Plant**.

I trust that this information and enclosed certification will be sufficient. However, if you have any further questions in this matter, please do not hesitate to contact Dave Spallina, President, Elam Sand and Gravel, Corp.

Sincerely,

Susan J. Keister
Environmental Resource Manager

Milherst Construction, Inc.
P.O. Box 631
Getzville, New York 14068

Phone (716) 688-9098
Fax (716) 688-9562

Submittal No. 25

Lehigh Valley RR Derailment Site

Owner NYS Department of Environmental Conservation
Bureau of Construction Services, 12th Floor
625 Broadway
Albany, NY 12233-7013

Contractor Milherst Construction, Inc
Date 12/19/01

Item: Concrete Mix

Specification:
Section: C2700
Page No.: 02700-1
Para. No.: 2.01 A
Drawing No.: –
Location: At fittings

I hereby certify that review, verification of products required, field dimentions, adjacent construction work and coordination of information, is in compliance with the requirements of the work and contract documents.

Approved By: Charles F. Kubinec

☐ APPROVED
☒ APPROVED AS CORRECTED
~~(Resubmit final copy for file)~~
☐ REVISE AND RESUBMIT BEFORE PROCEEDING
☐ NOT APPROVED

Review only for conformance with the design concept of the project and with information given in the Contract Documents. The Contractor is responsible for: verifying that dimensions are confirmed and correlated at the job site; obtaining information that pertains to the fabrication processes or to techniques of construction, and: coordinating the work of all subcontractors.
STEARNS & WHELER, LLC Engineers and Scientists

By TJF Date 12/20/01

1. This will be allowed for individual small blocks (must be mechanically mixed). for multiple thrust block placement, transit mix is required.

2. Regardless of method cylinders are required

SPEC DATA 2001

SUBMITTAL
MILHERST CONSTRUCTION, INC.
Job: Contract D 004327
Item: Concrete for
Descr: Thrust Blocks
Reviewed By: [illegible]
Date: 12/19/01

Structural Concrete 03310

The QUIKRETE® Companies

QUIKRETE®

1. Product Name
QUIKRETE® Concrete Mix #1101

2. Manufacturer
The QUIKRETE Companies
2987 Clairmont Road, Suite 500
Atlanta, GA 30329
(404) 634-9100
Fax: (404) 634-9568
www.quikrete.com

3. Product Description
BASIC USE

For pouring concrete 2" (51 mm) thick or more and building or repairing anything out of concrete, including:

- Foundation walls and footings
- Sidewalks, curbs, steps, ramps and walkways
- Appliance and equipment platforms
- Pipe and post footings
- Floor slabs and patios
- Pools, fish pools, stepping stones
- Splashblocks and bird baths
- Riprap & slope protection
- Driveway repairs

COMPOSITION & MATERIALS

QUIKRETE Concrete Mix consists of a uniformly blended, properly proportioned mixture of stone, gravel, sand, portland cement and other ingredients approved for use in concrete.

SIZES

- 40 lb (18.1 kg) bags
- 60 lb (27.2 kg) bags
- 80 lb (36.2 kg) bags

YIELD

- An 80 lb (36.3 kg) bag yields approximately 2/3 cu ft (19 L)
- A 60 lb (27.2 kg) bag yields approximately 1/2 cu ft (14 L)
- A 40 lb (18.1 kg) bag yields approximately 1/3 cu ft (9 L)

4. Technical Data
APPLICABLE ATANDARDS

American Society for Testing & Materials (ASTM) - ASTM C387, Standard Specifications for Packaged, Dry Combined Materials for Mortar and Concrete

PHYSICAL/CHEMICAL PROPERTIES

QUIKRETE Concrete Mix exceeds the compressive strength requirements of ASTM C387, as shown in Table 1.

5. Installation
PREPARATORY WORK

Stake out the planned area and remove sod or soil to the desired depth. Nail and stake forms securely in place. Tamp and compact the subbase until firm.

MACHINE MIXING INSTRUCTIONS

QUIKRETE Concrete Mix can be mixed in a barrel-type concrete mixer or a mortar mixer.

- Choose the mixer size most appropriate for the size of the job to be done.
- Allow at least 1 cu ft (28 L) of mixer capacity for each 80 lb (36.3 kg) bag of QUIKRETE Concrete Mix to be mixed at one time.
- For each 80 lb (36.3 kg) bag of QUIKRETE Concrete Mix to be mixed, add approximately 6 pt (2.8 L) of fresh water to the mixer.
- Turn on the mixer and begin adding the concrete to the mixer.
- If the material becomes too difficult to mix, add additional water until a workable mix is obtained.
- If a slump cone is available, adjust water to achieve a 2" - 3" (50.1 - 76 mm) slump.

Note - Final water content should be approximately 6 - 9 pt (2.8 - 4.3 L) of water per 80 lb (36.3 kg) bag of concrete. For other bag sizes, use Table 2 to determine water content.

HAND MIXING INSTRUCTIONS

- Empty concrete bags into a suitable mixing container.

QUIKRETE® Concrete Mix #1101

- For each 80 lb (36.3 kg) bag of mix, add approximately 6 pt (2.8 L) of clean water.
- Work the mix with a shovel, rake or hoe and add water as needed until a stiff, moldable consistency is achieved.
- Be sure all material is wet.
- Do not leave standing puddles.

Note - For other bag sizes, use Table 2 to determine water content.

APPLICATION

Method for Pouring a Slab

- Dampen the subgrade before concrete is placed.
- Do not leave standing puddles.
- Shovel or place concrete into the form; fill to the full depth of the form.
- After concrete has been compacted and spread to completely fill the forms without air pockets, strike off and float immediately.
- To strike off, use a straight board (screed), moving the edge back and forth with a saw-like motion to smooth the surface.
- Use a darby or bull float to float the surface; this levels any ridges and fills voids left by the straight edge.
- Cut the concrete away from the forms by

TABLE 1 TYPICAL PROPERTIES OF QUIKRETE CONCRETE MIX

Cure Time	Compressive strength
7 days	2600 psi (17.9 MPa)
28 days	4000 psi (27.5 MPa)
Slump Range	2" - 3" (50.1 - 76 mm)

TABLE 2 MIXING WATER FOR QUIKRETE CONCRETE MIX

Package size, lb (kg)	Starting water content, pt (L)	Final water content, pt (L)
80 (36.3)	6 (2.8)	6 - 9 (2.8 - 4.3)
60 (27.2)	4 (1.9)	4 - 7 (1.9 - 3.3)
40 (18.1)	3 (1.4)	3 - 4.5 (1.4 - 2.1)

SPECDATA® and MANU-SPEC® are registered trademarks of the Construction Specifications Institute. This report SPEC-DATA format conforms to the [illegible]

03310 Structural Concrete

SPEC DATA 2001

The QUIKRETE® Companies

running an edging tool or trowel along the forms to compact the slab edges.
- Cut 1" (25.4 mm) deep control joints into the slab every 6' - 8' (1.8 - 2.4 m) using a grooving tool.
- Allow concrete to stiffen slightly, waiting until all water has evaporated from the surface before troweling or applying a broom finish.

Note - For best results, do not overwork the material.

Method for Setting Fence Posts
- Dig post hole about 3 times the diameter of the post. Hole depth should be 1/3 the overall post height.
- Place 6" (150 mm) of dry concrete mix in the bottom of the hole. Position the post, checking that it is level and plumb. Combine concrete mix with water and place into the hole.
- When standing water has evaporated from the concrete, smooth the surface. Taper it away from the post so rain will flow in that direction. Wait 24 hours before post is subjected to any strain.
- For load-bearing applications, follow local building codes for proper footing specifications.

FINISHING

Any standard concrete finishing technique is acceptable for use with QUIKRETE Concrete Mix. Concrete can be hand troweled, power troweled, broom finished, or finished with other specialty finishes.

CURING

General

Curing is one of the most important steps in concrete construction. Proper curing increases the strength and durability of concrete, and a poor curing job can ruin an otherwise well-done project. Proper water content and temperature are essential for good curing. In near freezing temperatures the hydration process slows considerably. When weather is too hot, dry or windy, water is lost by evaporation from the concrete, and hydration stops, resulting in finishing difficulties and cracks. The ideal circumstances for curing are ample moisture and moderate temperature and wind conditions.

Curing should be started as soon as possible and should continue for a period of 5 days in warm weather at 70 degrees F (21 degrees C) or higher or 7 days in colder weather at 50 degrees F - 70 degrees F (10 degrees C - 21 degrees C).

Specific Curing Methods

QUIKRETE Acrylic Concrete Cure & Seal provides the easiest and most convenient method of curing.
- Apply by spray, brush or roller soon after the final finishing operation when the surface is hard. The surface may be damp, but not wet, when applying curing compound. Complete coverage is essential.
- Other methods of providing proper curing include covering the surface with wet burlap; keeping the surface wet with a lawn sprinkler and sealing the concrete surface with plastic sheeting or waterproof paper to prevent moisture loss.
- If burlap is used, it should be free of chemicals that could weaken or discolor the concrete. New burlap should be washed before use. Place it when the concrete is hard enough to withstand surface damage and sprinkle it periodically to keep the concrete surface continuously moist.
- Water curing with lawn sprinklers, nozzles or soaking hoses must be continuous to prevent interruption of the curing process.
- Curing with plastic sheets is convenient. They must be laid flat, thoroughly sealed at joints and anchored carefully along edges.

PRECAUTIONS
- Curing compounds should not be applied if rain or temperatures below 50 degrees F (10 degrees C) are expected within 24 hours.
- Curing with plastic or burlap can cause patchy discoloration in colored concrete. For colored concrete, wet curing or the use of QUIKRETE Acrylic Concrete Cure & Seal is recommended.
- Do not use curing compounds during late fall on surfaces where deicers will be used to melt ice and snow. Using curing compounds at that time may prevent proper air drying of the concrete, which is necessary to enhance its resistance to damage caused by deicers.
- Protect concrete from freezing during the first 48 hours. Plastic sheeting and insulation blankets should be used if temperatures are expected to fall below 32 degrees F (0 degrees C).

6. Availability

QUIKRETE Concrete Mix is available at leading concrete construction supply houses and distributors. Contact QUIKRETE Construction Products for the name of the nearest dealer.

7. Warranty

The QUIKRETE Companies warrant this product to be of merchantable quality when used or applied in accordance with the instructions herein. The product is not warranted as suitable for any purpose or use other than the general purpose for which it is intended. Liability under this warranty is limited to the replacement of this product (as purchased) found to be defective, or at the shipping companies' option, to refund the purchase price. In the event of a claim under this warranty, notice must be given to The QUIKRETE Companies in writing. This limited warranty is issued and accepted in lieu of all other express warranties and expressly excludes liability for consequential damages.

8. Maintenance

None required.

9. Technical Services

The QUIKRETE Companies maintain technical field representatives throughout the country. Contact a local distributor for the name and number of the nearest representative or call QUIKRETE Construction Products.

10. Filing Systems
- First Source for Products
- Additional product information is available from the manufacturer.

Architects' First Source

SPEC DATA® and MANU-SPEC® are registered trademarks of The Construction Specifications Institute. The ten-part SPEC DATA format conforms to the editorial style of the Construction Specifications Institute and is used with their permission. The manufacturer is responsible for technical accuracy. ©2001 Architects' First Source. All Rights Reserved.

Milherst Construction, Inc.
P.O. Box 631
Getzville, New York 14068

Phone (716) 688-9098
Fax (716) 688-9562

Submittal No. 26

Lehigh Valley RR Derailment Site

Owner NYS Department of Environmental Conservation
Bureau of Construction Services, 12th Floor
625 Broadway
Albany, NY 12233-7013

Contractor Milherst Construction, Inc
Date 12/19/01

Item: Tack Coat

Specification:
Section: 02510
Page No.: 02510-6
Para. No.: 2.01 D
Drawing No.:
Location: As Required

I hereby certify that review, verification of products required, field dimentions, adjacent construction work and coordination of information, is in compliance with the requirements of the work and contract documents.

Approved By: Charles F. Kubinec

☐ **APPROVED**
☐ **APPROVED AS CORRECTED**
(Resubmit final copy for file)
☐ **REVISE AND RESUBMIT BEFORE PROCEEDING**
☒ **NOT APPROVED**

Review only for conformance with the design concept of the project and with information given in the Contract Documents. The Contractor is responsible for: verifying that dimensions are confirmed and correlated at the job site; obtaining information that pertains to the fabrication processes or to techniques of construction, and: coordinating the work of all subcontractors.
STEARNS & WHELER, LLC Engineers and Scientists

By TJF Date 12/28/01

This is not a shop drawing, its an MSDS sheet.

RAPID-CURING ASPHALT CUTBACK
FLAMMABLE LIQUID NA 1999
FLAMMABLE LIQUID FEREAC 41.57018.76

DANGER
EXTREMELY FLAMMABLE OSHA NFPA CLASS-1 B FLAMMABLE LIQUID AND VAPOR HARMFUL. LIQUID IS HARMFUL OR FATAL IF SWALLOWED AND IRRITATING TO THE EYES AND SKIN. VAPORS ARE IRRITATING TO THE EYES AND RESPIRATORY SYSTEM AND MAY AFFECT THE NERVOUS SYSTEM.
BURN HAZARD! IMPROPER HANDLING OF HOT ASPHALT CAN RESULT IN THERMAL BURNS. CARGO TANKS MUST BE FREE OF WATER AND VOLATILE LIQUIDS BEFORE LOADING HOT ASPHALT.
NOT RECOMMENDED FOR RESIDENTIAL USE OR FOR USE ON SURFACES THAT HAVE BEEN SEALED WITH COAL TAR.

FLASH POINT	AUTO IGNITION TEMPERATURE
APPROXIMATELY 50° F.	APPROXIMATELY 428° F.

UNUSUAL FIRE AND EXPLOSIVE HAZARDS
EXTREMELY FLAMMABLE! THIS MATERIAL RELEASES VAPORS AT AMBIENT TEMPERATURES WHEN MIXED WITH AIR IN CERTAIN PROPORTIONS AND EXPOSED TO IGNITION SOURCE. THESE VAPORS CAN BURN IN THE OPEN OR EXPLODE IN CONFINED SPACES. BEING HEAVIER THAN AIR, VAPORS MAY TRAVEL LONG DISTANCES ALONG THE GROUND BEFORE REACHING A POINT OF IGNITION AND FLASHING BACK.

EXTINGUISHING MEDIA
DRY CHEMICAL AND CO_2 FOAM AND FOG ARE EFFECTIVE BUT MAY CAUSE FROTHING.

HEALTH HAZARDS

PRIMARY HAZARD - EYE AND SKIN BURNS CAN RESULT FROM CONTACT WITH HEATED LIQUID. LIQUID AND/OR VAPOR CONTACT CAN IRRITATE EYES, SKIN, AND RESPIRATORY SYSTEM.

INHALATION - VAPORS OF THIS MATERIAL CAN IRRITATE THE RESPIRATORY SYSTEM AND MAY ALSO CAUSE SIGNS AND SYMPTOMS OF CENTRAL NERVOUS SYSTEM DEPRESSION.

EYE CONTACT - EYE IRRITATION MAY RESULT FROM CONTACT WITH LIQUID AND/OR VAPORS

SKIN ABSORPTION - LIQUID CAN PENETRATE SKIN TO CAUSE CENTRAL NERVOUS SYSTEM DEPRESSION.

INGESTION - NAUSEA, VOMITING, DIARRHEA, RESTLESSNESS.

SPIRATION - CHEMICAL PNEUMONIA

EFFECTS OF OVER-EXPOSURE - EXPOSURE TO HIGH LEVELS OF HARMFUL VAPORS MAY CAUSE HEADACHE, NAUSEA, CONVULSIONS, LOSS OF CONSCIOUSNESS, AND DEATH FROM ASPHYXIATION. INHALATION OF MATERIALS SIMILAR TO COMPONENTS OF THIS PRODUCT PRODUCED KIDNEY DAMAGE IN TEST ANIMALS

EMERGENCY FIRST AID

INHALATION - IMMEDIATELY REMOVE FROM CONTAMINATED AREA TO FRESH AIR FOR RESPIRATORY DISTRESS. GIVE OXYGEN OR ADMINISTER CPR, IF NECESSARY. MUST OBTAIN PROMPT MEDICAL ATTENTION.
EYE CONTACT - FLUSH WITH CLEAN LOW PRESSURE WATER FOR AT LEAST 15 MINUTES. OBTAIN MEDICAL ATTENTION.
SKIN CONTACT - WITH HEATED ASPHALT: COOL EXPOSED TISSUE WITH ICE, AND/OR WATER. SEEK MEDICAL ATTENTION. REMOVE COLD ASPHALT BY SLOWLY WIPING WITH A CLOTH SOAKED IN WHITE MINERAL OIL, FOLLOWED BY WASHING WITH SOAP AND WATER.
INGESTION - DO NOT INDUCE VOMITING SINCE ASPIRATION INTO THE LUNGS WILL CAUSE CHEMICAL PNEUMONIA. SEEK IMMEDIATE MEDICAL ATTENTION.

ADDITIONAL PRECAUTIONS

HANDLING AND STORAGE - THIS MATERIAL IS USUALLY SHIPPED AT AMBIENT TEMPERATURES. AVOID CONTACT WITH HEATED MATERIAL. DO NOT LOAD OR UNLOAD DURING ELECTRICAL STORMS. ALL ELECTRICAL EQUIPMENT IN AREAS WHERE MATERIAL IS STORED AND/OR HANDLED SHOULD BE INSTALLED IN ACCORDANCE WITH THE NATIONAL ELECTRICAL CODE, NFPA. FOR MORE INFORMATION REFER TO AMERICAN PETROLEUM INSTITUTE PUBLICATIONS. STORE AND TRANSPORT IN ACCORDANCE WITH ALL APPLICABLE LAWS.

SUBMITTAL
MILHERST CONSTRUCTION, INC.
Job: Contract D004327
Item: Tack Coat
Descr: For Asphalt Paving
Reviewed By: CFK
Date: 12/19/01

Milherst Construction, Inc.
P.O. Box 631
Getzville, New York 14068

Phone (716) 688-9098
Fax (716) 688-9562

Submittal No. 26-1

Lehigh Valley RR Derailment Site

Owner NYS Department of Environmental Conservation
Bureau of Construction Services, 12th Floor
625 Broadway
Albany, NY 12233-7013

Contractor Milherst Construction, Inc
Date 1-11-02

Item: Tack Coat

Specification:

Section: 02510
Page No.: 02510-6
Para. No.: 2.01 D
Drawing No.:
Location: As Required

Milherst Construction, Inc. certifies that all quantities, dimensions, specified performance criteria, installation requirements, materials, catalog numbers, and similar data with respect thereto have been reviewed or that each Shop Drawing or sample has been coordinated with other Shop Drawings and samples and with the requirements of the Work and Contract Documents.

By: Charles F. Kubiniec
Charles F. Kubiniec
Project Manager

☒ **APPROVED**
☐ **APPROVED AS CORRECTED**
(Resubmit final copy for file)

☐ **REVISE AND RESUBMIT BEFORE PROCEEDING**
☐ **NOT APPROVED**

Review only for conformance with the design concept of the project and with information given in the Contract Documents. The Contractor is responsible for: verifying that dimensions are confirmed and correlated at the job site; obtaining information that pertains to the fabrication processes or to techniques of construction, and; coordinating the work of all subcontractors.
STEARNS & WHELER, LLC Engineers and Scientists

By JRP Date 1/28/2

MIDLAND ASPHALT MATERIALS, INC.

640 Young Street • P O Box 388 • Tonawanda, NY 14151-0388 • (716) 692-0730 • Fax: (716) 692-0613

26 - Rev 1

SUBMITTAL
MILHERST CONSTRUCTION, INC.
Job: Lehigh Valley RR Derailment Site
Item: Tack Coat
Descr: Preparation - Paving
Reviewed By: CFK
Date: 1-11-02

MATERIAL SUBMITTAL

DATE: 1/11/02

TO: MILHERST CONSTRUCTION
2601 MILLERSPORT HWY
GETZVILLE, NY 14068

MATERIAL DESIGNATION: 702-90 EMULSION TACK COAT

GRADE: CSS-1h

PROJECT NO: CONTRACT D004327

PROJECT LOCATION: LEHIGH VALLEY RAILROAD DERAILMENT SITE

The above referenced material meets or exceeds the requirements for this material as identified in the Standard Specifications Construction and Materials, New York State Department of Transportation dated January 2, 1995 including Addendum No. 1 dated April 8, 1999 and Addendum No. 2 dated November 4, 1999. The above referenced material also meets or exceeds ASTM D 2397 Specifications. All emulsified asphalt products covered under this submittal are manufactured by Midland Asphalt Materials, Inc.

MIDLAND ASPHALT

Tim McNally, Operations Manager

Milherst Construction, Inc.
P.O. Box 631
Getzville, New York 14068

Phone (716) 688-9098
Fax (716) 688-9562

Submittal No. 27

Lehigh Valley RR Derailment Site

Owner NYS Department of Environmental Conservation
Bureau of Construction Services, 12th Floor
625 Broadway
Albany, NY 12233-7013

Contractor Milherst Construction, Inc
Date 12/19/01

Item: Silt Fence

Specification:

Section: 01564
Page No.: 01564-3
Para. No.: 2.01 B
Drawing No.:
Location: Per Plans

I hereby certify that review, verification of products required, field dimentions, adjacent construction work and coordination of information, is in compliance with the requirements of the work and contract documents.

Approved By: Charles T. Kubinec

☒ **APPROVED**
☐ **APPROVED AS CORRECTED**
(Resubmit final copy for file)

☐ **REVISE AND RESUBMIT BEFORE PROCEEDING**
☐ **NOT APPROVED**

Review only for conformance with the design concept of the project and with information given in the Contract Documents. The Contractor is responsible for: verifying that dimensions are confirmed and correlated at the job site; obtaining information that pertains to the fabrication processes or to techniques of construction, and: coordinating the work of all subcontractors.
STEARNS & WHELER, LLC Engineers and Scientists

By TJF **Date** 12/28/01

Indian Valley Industries

Silt Fence

3611 Construction Grade

A Woven Sedimentation Fabric of 100% Polypropylene SLIT FILM Yarns. A Silt Fence designed primarily for use on private sector projects, yet meets many state and federal requirements

FX-7 Silt Fence
PRODUCT TEST DATA

Property	Test Method	English	Metric
Weight	ASTM D-3776	2.6 oz/sy	88 gm/sm
Tensile Strength	ASTM D- 4632	65lbs	290N
Elongation @ Break	ASTM D- 4632	20%	20%
Mullen Burst	ASTM D- 3786	180 psi	1240 kPa
Puncture Strength	ASTM D- 4833	45lbs	200N
Trapezoidal Tear	ASTM D- 4533	30lbs	135N
Apparent Opening Size	ASTM D- 4751	20-30 US Sieve	0.850-0.600mm
Permittivity	ASTM D- 4491	0.20sec (-1)	0.20sec (-1)
U.V. Resistance % Retained (500hrs)	ASTM D- 4355	90	90

Test results represent Minimum Average Roll Values (MARV) with the exception of weight which is a typical result.

Area Distributor

SUBMITTAL
MILHERST CONSTRUCTION, INC.
Job: Contract D004327
Item: Silt fence 4
Descr: Erosion control
Reviewed By: CFK
Date: 12/19/01

For additional information on other Indian Valley Industries construction products and your area distributor, please contact:

Indian Valley Industries, Inc.
P.O. Box 810
Johnson City NY 13790
Ph. (607) 729-5111 / (800) 659-5111 / Fax. (607) 729-5158

THE INFORMATION PRESENTED HEREIN, WHILE NOT GUARANTEED, IS TO THE BEST OF OUR KNOWLEDGE TRUE AND ACCURATE. EXCEPT WHEN AGREED TO IN WRITING FOR SPECIFIC CONDITIONS OF USE, NO WARRANTY OR GUARANTEE EXPRESSED OR IMPLIED IS MADE REGARDING THE PERFORMANCE OF ANY PRODUCT, SINCE THE MANNER OF USE AND HANDLING ARE BEYOND OUR CONTROL. NOTHING CONTAINED HEREIN IS TO BE CONSTRUED AS PERMISSION OR AS A RECOMMENDATION TO INFRINGE ANY PATENT.

Milherst Construction, Inc.
P.O. Box 631
Getzville, New York 14068

Phone (716) 688-9098
Fax (716) 688-9562

Submittal No. 18

Lehigh Valley RR Derailment Site

Owner NYS Department of Environmental Conservation
Bureau of Construction Services, 12th Floor
625 Broadway
Albany, NY 12233-7013

Contractor Milherst Construction, Inc
Date 12/19/01

Item: Bentonite Clay Trench Stop

Specification:

Section: —
Page No.: —
Para. No.: —
Drawing No.: G-9
Location: Along Steep Slope

I hereby certify that review, verification of products required, field dimentions, adjacent construction work and coordination of information, is in compliance with the requirements of the work and contract documents.

Approved By: Charles F. Kubinec

☒ **APPROVED**

☐ **APPROVED AS CORRECTED**
(Resubmit final copy for file)

☐ **REVISE AND RESUBMIT BEFORE PROCEEDING**

☐ **NOT APPROVED**

Review only for conformance with the design concept of the project and with information given in the Contract Documents. The Contractor is responsible for: verifying that dimensions are confirmed and correlated at the job site; obtaining information that pertains to the fabrication processes or to techniques of construction, and: coordinating the work of all subcontractors.
STEARNS & WHELER, LLC Engineers and Scientists

By TJF Date 12/28/01

SUBMITTAL
MILLHERST CONSTRUCTION, INC.
Job: Contract D004327
Item: Bentonite for
Descr: Clay Trench Stops
Reviewed By: CFC
Date: 12/19/01

TECH DATA SHEET

CETCO
Colloid Environmental Technologies Company
Volclay Waterproofing Division

1. PRODUCT NAME

VOLCLAY WATERSTOPPAGE

2. MANUFACTURER

Colloid Environmental Technologies Company (CETCO)
Volclay Waterproofing Division
1350 West Shure Drive
Arlington Heights, Illinois 60004
Phone: (708)392-5800
Fax: (708)506-6195

3. PRODUCT DESCRIPTION

Basic Uses: Waterstoppage is a chemically treated sodium bentonite. Waterstoppage is used as an accessary product in conjunction with primary Volclay bentonite waterproofing products. Waterstoppage hydrates with water to form a impervious gel.

Waterstoppage is used to fill cavities and voids around penetrations or irregularities. Use to form cove at horizontal to vertical transitions. Use for placement of additional bentonite in critical waterproofing areas. Waterstoppage is not an expansion joint material. Expansion joints are the responsibility of others.

Composition: Waterstoppage will not wear out or deteriorate with age. It is mined from Cretaceous Age deposits, then dried and sized. It has been tested with severe exposures to radiation and a wide range of solvents and has been proven inert to these chemicals. The granular bentonite passes 90% through a 20 mesh sieve and less than 10% through a 200 mesh sieve. Mineralogical composition is 90% minimum Montmorillonite with 10% maximum native sediments of feldspars, micas, and unaltered volcanic ash. See Table 1 for approximate chemical analysis.

Packaging:
Individual 50 pound bags. (22.68kg)
Forty (40) bags per pallet - 2000 lbs.
One Bag Equals .83 Cubic Feet

Limitations: Waterstoppage should not be applied in standing water or during precipitation. If the soil contains strong acids, alkalines, or brines, water samples should be submitted to the manufacturer for tolerability testing. Special instructions or special products are available for some of these diverse conditions.

4. TECHNICAL DATA

TABLE 1
CHEMICAL ANALYSIS

Silica	60.0%
Alumina	20.0
Iron Oxides	5.0
Magnesia	3.0
Soda	3.0
Lime	1.0
Bonded Water	6.0
Minor	2.0

Typical Sieve Analysis	
U.S. 20 Mesh	90%
U.S. 200 Mesh	10%

Free Swell Rating: 2 grams sifted into deionized water swells to occupy a minimum volume of 16 cc.

5. INSTALLATION

Preparatory Work: Remove debris from area to receive Waterstoppage.

Method: Cut a corner of the bag to pour Waterstoppage for directional control of product placement. One bag should cover approximately 30 linear feet at a rate of 1-1/2" thick cant or 70 square feet at 1/8" thick uniform application on a horizontal surface.

6. AVAILABILITY AND COST

Availability: Available throughout the United States, Canada, the Far East, and Europe through a network of CETCO Distributors. Contact manufacturer for the nearest distributors location.
Cost: Applied costs are dependent upon local labor costs, freight rates, job site conditions, etc. Costs are competitive with conventional waterproofing materials.

7. WARRANTY

Information contained herein supersedes all previously printed matter and is subject to change without notice.

All goods sold by Seller are warranted to be free from defects in material or workmanship.

The foregoing warranty is in lieu of and excludes all other warranties not expressly set forth herein, whether expressed or implied by operation of law or otherwise, including but not limited to any implied warranties of merchantability or fitness.

Seller shall not be liable for incidental or consequential losses , damages or expenses, directly or indirectly arising form the sale, handling or use of the goods, or from any other cause relating thereto, and Seller's liability hereunder in any case is expressly limited to the replacement (in form originally shipped) of goods not complying with this agreement or at Seller's election, to the repayment of, or crediting Buyer with, an amount equal to the purchase price of such goods, whether such claims are for breach of warranty or negligence.

Any claim by Buyer with reference to the goods sold hereunder for any cause shall be deemed waived by Buyer unless submitted to Seller in writing thirty (30) days from the date Buyer discovered, any claimed breach.

Printed in USA 10/94

Colloid Environmental Technologies Company
October 1994 (Supersedes March 1992)

WATERPROOFING
Panel Bentonite System

Milherst Construction, Inc.
P.O. Box 631
Getzville, New York 14068

Phone (716) 688-9098
Fax (716) 688-9562

Submittal No.29

Lehigh Valley RR Derailment Site

Owner NYS Department of Environmental Conservation
Bureau of Construction Services, 12th Floor
625 Broadway
Albany, NY 12233-7013

Contractor Milherst Construction, Inc

Date January 17, 2002

Item: Frame & Cover for Meter & Pressure Reducing Pits

Specification:

Section: N/A
Page No.: N/A
Para. No.: N/A
Drawing No.: Sheet G-28
Location: 5 Locations

Syracuse Castings Equivalent to:
Neenah R-1741-D Type C with Checkered Lid.

Milherst Construction, Inc. certifies that all quantities, dimensions, specified performance criteria, installation requirements, materials, catalog numbers, and similar data with respect thereto have been reviewed or that each Shop Drawing or sample has been coordinated with other Shop Drawings and samples and with the requirements of the Work and Contract Documents.

By: Charles F. Kubiniec

Charles F. Kubiniec
Project Manager

1. Need weights of 3 manhole components
2. Verify that "ladder up safety post" will clear shall not open when extended

☐ **APPROVED**
☐ **APPROVED AS CORRECTED**
(Resubmit final copy for file)
☒ **REVISE AND RESUBMIT BEFORE PROCEEDING**
☐ **NOT APPROVED**

Review only for conformance with the design concept of the project and with information given in the Contract Documents. The Contractor is responsible for: verifying that dimensions are confirmed and correlated at the job site; obtaining information that pertains to the fabrication processes or to techniques of construction, and: coordinating the work of all subcontractors.
STEARNS & WHELER, LLC Engineers and Scientists

By TJF Date 1/31/02

002
SYRACUSE CASTING SALES
01/23/02 WED 08:41 FAX 315 699 2982

SUBMITTAL
HEIDELBERG CONSTRUCTION CO.
Job: Lehigh Valley R.R. Derailment Site - Waterline
Item: Frame & Cover for Meter Pits
Descr:
Reviewed By: CFK
Date: 1-23-02

See Sheet G-28 → Neenah R-1741-D Type "C" with checkered Lid OR "Equal."

NOTES:

1.) MATERIAL SHALL BE GRAY CAST IRON CONFORMING TO A.S.T.M. A48 (LATEST REVISION) CLASS 30B. SECTION THICKNESS AT ANY POINT SHALL BE A MINIMUM OF 1/2".

2.) UNITS DESIGNED HEAVY DUTY FOR A.A.S.H.T.O. HS20-44 WHEEL LOADS.

3.) EACH FRAME SHALL HAVE MACHINED HORIZONTAL BEARING SURFACES.

4.) DIMENSIONS ARE APPLIED USING SOFT CONVERSION. ALL DIMENSIONS IN BRACKETS ARE MILLIMETERS.

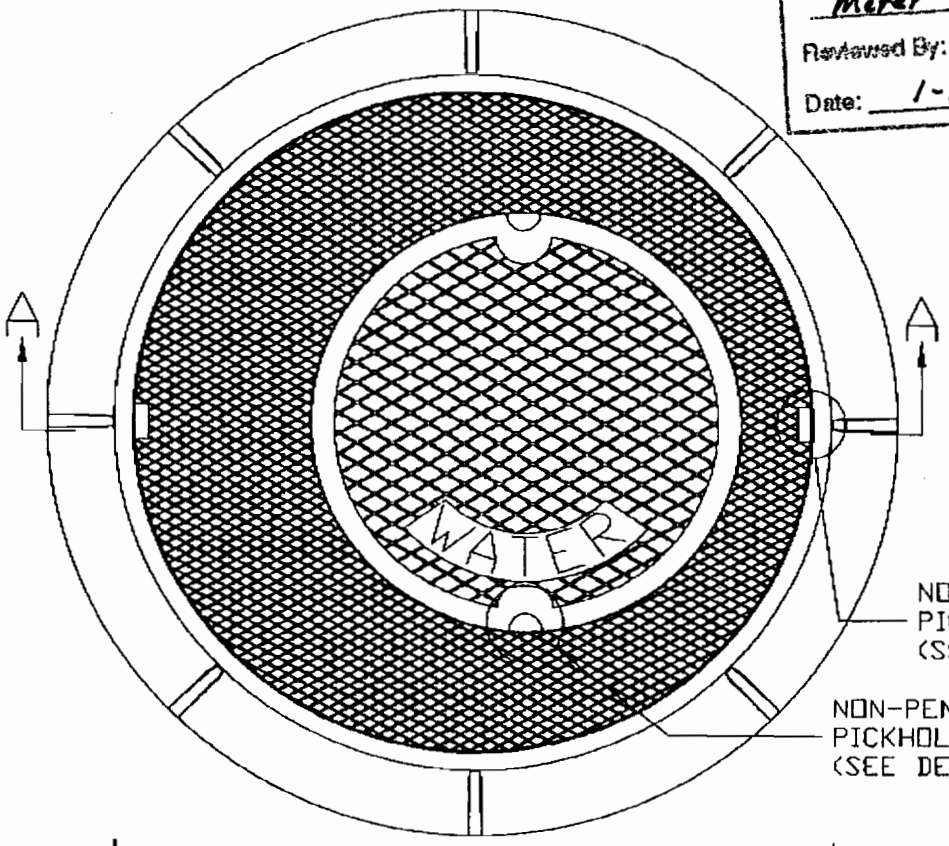

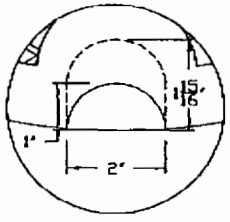

NON-PENETRATING PICKHOLE DETAIL

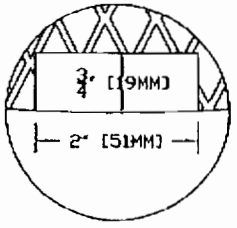

NON-PENETRATING PICKHOLE DETAIL

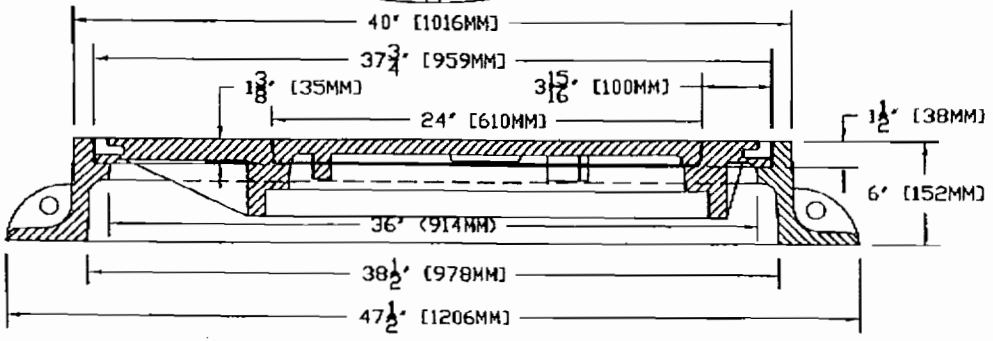

SECTION A - A

#4454 FRAME, COVER, AND INNER COVER "WATER" - CAST IRON

DRAWING # 110300-A			
FILE # 2012037C-4429700-1007719PC			
Drawn By: ARO	DATE: 11/03/00	Revised By: ARO	Revised: 11/20/00

SYRACUSE CASTINGS SALES CORP.
P.O. Box 1821 / 6177 South Bay Rd.
Cicero, N.Y. 13039
315-699-2601 Fax # 315-699-2982
www.syrcast.com

Milherst Construction, Inc.
P.O. Box 631
Getzville, New York 14068

Phone (716) 688-9098
Fax (716) 688-9562

Submittal No. 29 Revision 1

Lehigh Valley RR Derailment Site

Owner NYS Department of Environmental Conservation
Bureau of Construction Services, 12th Floor
625 Broadway
Albany, NY 12233-7013

Contractor Milherst Construction, Inc

Date February 28, 2002

Item: Frame and Cover for Meter & Pressure Reducing Pits

Specification:

Section: 03482
Page No.: 03482-4
Para. No.: 2.07 D
Drawing No.: Sheet G 28
Location: 5 Required

Comments: Kistner will be supply the verification that the ladder up to be provided by them will clear the small lid opening when extended.

Milherst Construction, Inc. certifies that all quantities, dimensions, specified performance criteria, installation requirements, materials, catalog numbers, and similar data with respect thereto have been reviewed or that each Shop Drawing or sample has been coordinated with other Shop Drawings and samples and with the requirements of the Work and Contract Documents.

By: Charles F. Kubiniec

Charles F. Kubiniec
Project Manager

☒ APPROVED

☐ **APPROVED AS CORRECTED**
(Resubmit final copy for file)

☐ **REVISE AND RESUBMIT BEFORE PROCEEDING**

☐ **NOT APPROVED**

Review only for conformance with the design concept of the project and with information given in the Contract Documents. The Contractor is responsible for: verifying that dimensions are confirmed and correlated at the job site; obtaining information that pertains to the fabrication processes or to techniques of construction, and: coordinating the work of all subcontractors.
STEARNS & WHELER, LLC Engineers and Scientists

By TJF Date 3/12/02

R-1740-1 Series
Large Manhole Frames, Solid Lid with Removable Center Lid

SUBMITTAL
CONTRACT CONSTRUCTION, INC.
Job: Lehigh Valley Railroad Derailment Site - Waterford
Item: Frame & Cover - Vault G
Spec: 03482-4 2.07 D
Reviewed By: CFK
Date: 2-28-02

Heavy Duty

Removable 22" diameter lid provides easy access to underground vault. **R-1741-D** off center access lid aligns with permanent underground ladder fastened to vault wall.

Catalog No.	Dimensions in Inches A	AA	B	C	E	F	Lid Type
R-1740-D2	38	19	1 1/2	36	49	10	B
R-1740-E	44	22	1 3/4	42	56	10	B
R-1740-E1	(See note below**)						
R-1740-F†	50	25	2	48	62	10	B
R-1741-D*	38	—	1 1/2	36	49	10	C
R-1741-E*	44	—	1 3/4	42	56	10	C
R-1741-F*†	50	—	2	48	62	10	C

*22" diameter center lid located 6" off center.
Same as **R-1740-E, except center lid has 31 15/16" diameter.
†Base flange (Dimension E) is flattened to 59" at four quarter points.

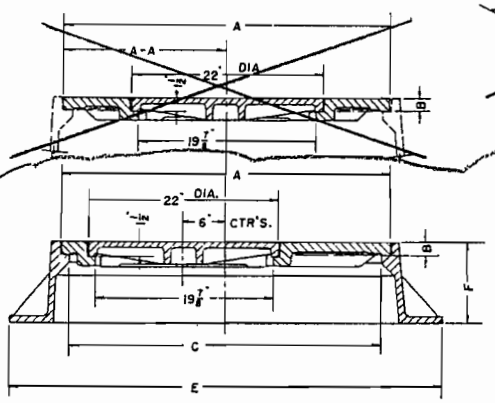

Illustrating R-1740 Series with 22" dia. access lid.

Illustrating R-1741 Series with access lid off center

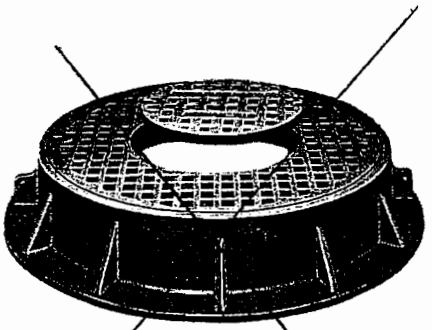

Illustrating R-1740-E with type "B" lid.

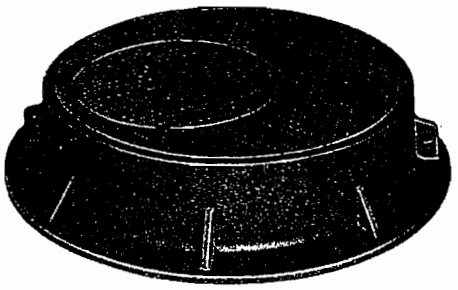

Illustrating R-1741 Series type "C" Access lid

R-1741-F1
Manhole Frame, Solid Lid
Removable Center Lid

Heavy Duty

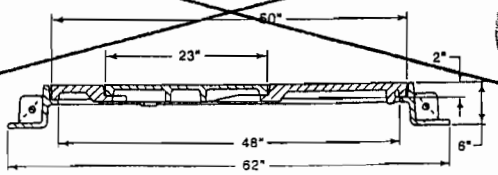

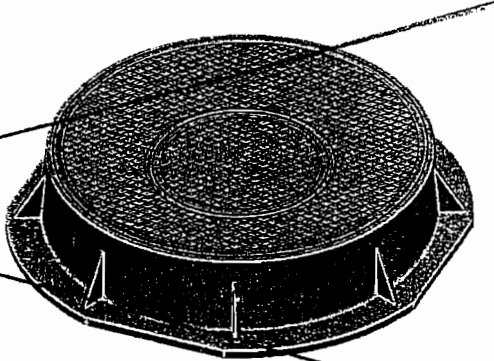

Milherst Construction, Inc.
P.O. Box 631
Getzville, New York 14068

Phone (716) 688-9098
Fax (716) 688-9562

Submittal No. 30

Lehigh Valley RR Derailment Site

Owner NYS Department of Environmental Conservation
Bureau of Construction Services, 12th Floor
625 Broadway
Albany, NY 12233-7013

Contractor Milherst Construction, Inc

Date January 17, 2002

Item: Frame & Cover for Meter & Pressure Reducing Pits

Specification:

Section: 02227

Page No.: 0227-2

Para. No.: 3.03 - F

Drawing No.:

Location: Various

Refer to addendum and discussion at Job Meetings.
MCWA requires backfill to be a suitable mix of earth, gravel, rock - all less than 6" material - such that the trench is not difficult to re-excavate for maintenance purposes or so open that a french drain is created.

Attached: Details of EXTEC 6000 Screening Plant.
Narative on proposed proceedures.

Milherst Construction, Inc. certifies that all quantities, dimensions, specified performance criteria, installation requirements, materials, catalog numbers, and similar data with respect thereto have been reviewed or that each Shop Drawing or sample has been coordinated with other Shop Drawings and samples and with the requirements of the Work and Contract Documents.

By: Charles F. Kubiniec

Charles F. Kubiniec
Project Manager

☐ APPROVED

☐ APPROVED AS CORRECTED
(Resubmit final copy for file)

☒ REVISE AND RESUBMIT BEFORE PROCEEDING

☐ NOT APPROVED

See attached Comments

Review only for conformance with the design concept of the project and with information given in the Contract Documents. The Contractor is responsible for: verifying that dimensions are confirmed and correlated at the job site; obtaining information that pertains to the fabrication processes or to techniques of construction, and: coordinating the work of all subcontractors.
STEARNS & WHELER, LLC Engineers and Scientists

By TJF Date 1/31/02

Comments
Submittal No. 30

Water Distribution System
Lehigh Valley Railroad Derailment Site
Site No. 8-19-014
Contract No. D004327

1. Identify that this is non conforming submittal and reference where you are changing specifications.
   Section 02226, 3.03 Rock Removal - General, states "remove excavated materials from site"
   Section 02227, 2.01 D, states "Trench backfill elsewhere may be surplus excavated material (excluding rock taken from blasting or ripping) or equal."

2. Where will screen be set up?

3. Handling blasted rock in the same manner as areas excavated by backhoe may not be acceptable. Take that into account in your details.

4. Add paragraph that says final decision as to suitability will be made by the Engineer in consultation with MCWA.

5. Add drawings / details for typical trenches with various depths of rock and their removal methods.

6. Edit submittal cover sheet "Item" is incorrect.

Milherst Construction, Inc.

2601 MILLERSPORT HWY. • P.O. BOX 631
GETZVILLE, NY • 14068-0631
(716) 688-9098 • FAX (716) 688-9562

January 25, 2002

Submittal 30
Procedure for trench backfill

1. In areas where the Trencor Rock Trencher precedes the pipe crew.
   The material generated by the Trencor machine is equal to a –1" ROC select backfill and will be utilized as is.

2. In areas where the pipe trench is excavated with a backhoe. (no blasting or trench grinding)
   Care will be taken to separate all material over 6" and haul it away. If it is determined that on site separation to –6" is not effective; all excavation will be loaded and hauled to a site where the Extec 6000 Screen has been set up. The material will be screened and the truck will return with machine-screened material for backfill. Normally the screening process generates a homogeneous material suitable for backfill.

3. In areas where the rock is blasted, the same procedure as 2 above will be implemented.

4. Excess material generated by the Trencor machine will be stockpiled and available for areas where more fines are needed to produce a suitable backfill and for areas with insufficient suitable material.

Introducing

EXTEC 6000

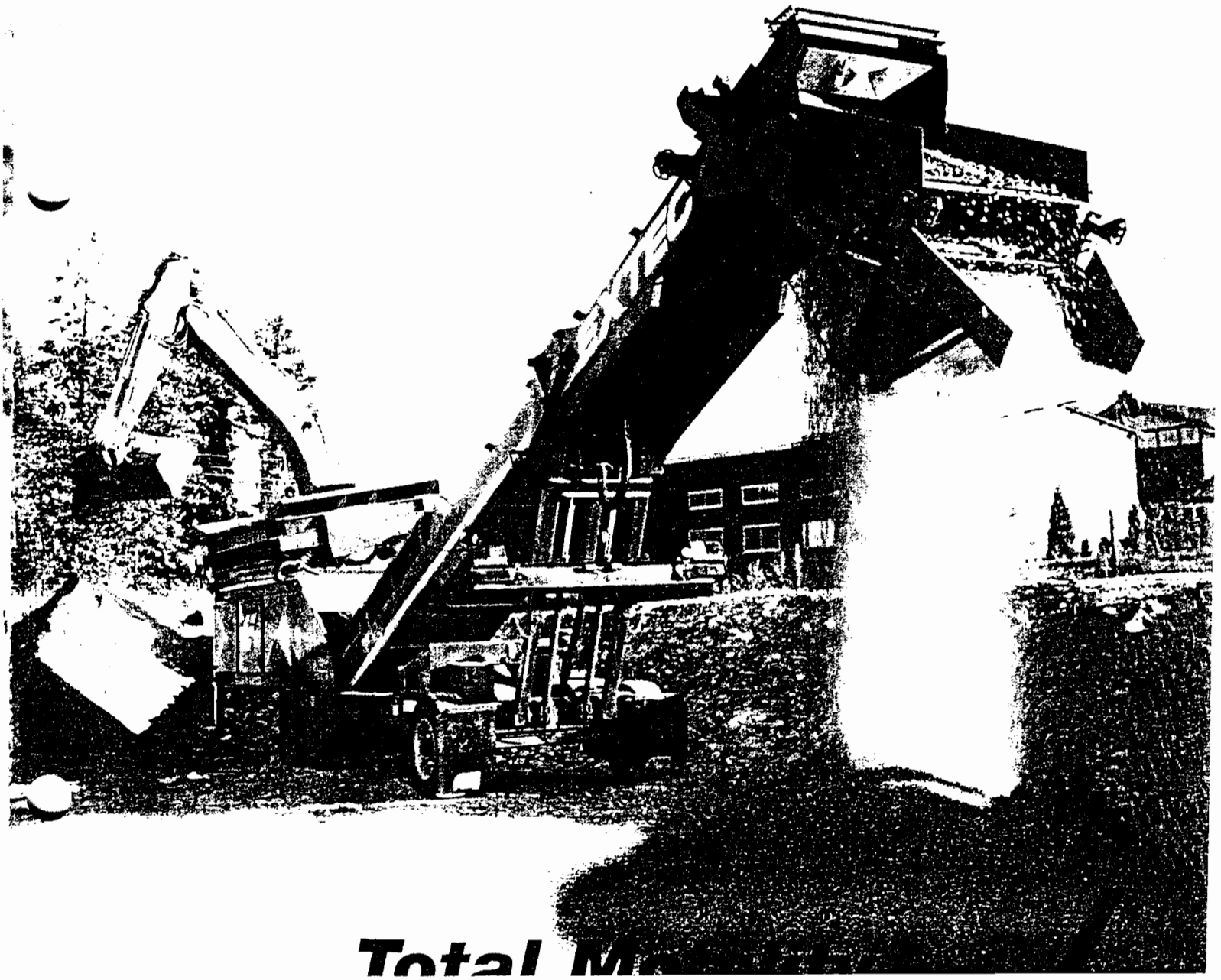

Total M

Specification

Power Unit: Deutz 67 hp (50 kw) Diesel Engine		[illegible]	
Total Gross Weight	14,245 kg	[illegible]	14,245 kg
Overall Length (towing)	12.43 m	[illegible]	12.43 m
Overall Width (towing)	2.75 m	[illegible]	2.75 m
Overall Height (towing)	3.99 m	[illegible]	3.99 m
Conveyor Belt Width	1.0 m	[illegible]	1.0 m
Conveyor Belt Length	12.8 m	[illegible]	12.8 m
Hydraulic System Capacity	350 ltrs	[illegible]	350 ltrs

Moteur: Deutz 67 hp [illegible]		Unidad de potencia: Deutz 67 hp (50 kw) Diesel Engine	
Poids	[illegible]	Remolcador	14.245 kg
Longeur (en transportation)	[illegible]	Longitud total (remolque)	12.43 m
Largeur (en transportation)	[illegible]	Ancho total	2.75 m
Hauteur (en transportation)	[illegible]	Altura total (remolque)	3.99 m
Largeur de convoyeur	[illegible]	Anchura de la cinta transportadora	1.0 m
Longeur du convoyeur	[illegible]	Longitud de la cinta transportadora	12.8 m
Capacité du système hydraulique	[illegible]	Capacidad del sistema hidráulico	350 ltrs

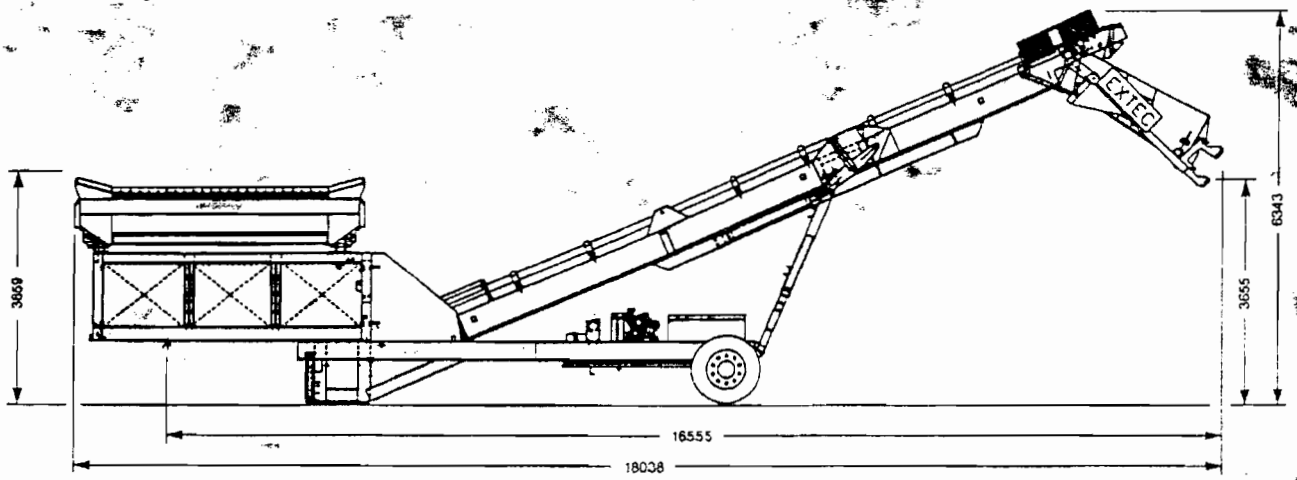

Douglas Siebtechnik GmbH.
Am Frauenberg 2,
36280 Oberaula,
Deutschland.
Telefon 06628 9211-0
Telefax 06628 9211-11

Extec of North America.
Tinicum Industrial Park.
10 Industrial Highway.
Lester PA 19113.
USA.
Telephone 1-800-44 SCREEN
PHIL (610)-521 6344

Extec Screens and Crushers Ltd..
Hearthcote Road.
Swadlincote.
Derbyshire DE11 9DU.
England.
Telephone +44 (0)1283 212121
Fax +44 (0)1283 217342

Contact Extec for your nearest dealer

[illegible]

Extec reserves the right to change specification without prior notice

[illegible]

Póngase en contacto con el proveedor de Extec más cercano.

Extec se reserva el derecho a modificar las especificaciones técnicas sin previo aviso

Extec provides extensive worldwide customer support and service back-up. Being a true international organisation, Extec has distributors and dealers throughout the world.

Milherst Construction, Inc.
P.O. Box 631
Getzville, New York 14068

Phone (716) 688-9098
Fax (716) 688-9562

Submittal No. 30 Revision 1

Lehigh Valley RR Derailment Site

Owner NYS Department of Environmental Conservation
Bureau of Construction Services, 12th Floor
625 Broadway
Albany, NY 12233-7013

Contractor Milherst Construction, Inc

Date February 11, 2002

Item: Procedure for Trench Backfill

Specification:
Section: 02227
Page No.: 02227-2
Para. No.: 3.03 - F
Drawing No.:
Location: Various

Refer to addendum and discussion at Job Meetings.
MCWA requires backfill to be a suitable mix of earth, gravel, rock - all less than 6" material - such that the trench is not difficult to re-excavate for maintenance purposes or so open that a french drain is created.

Attached: Details of EXTEC 6000 Screening Plant.
Narative on proposed proceedures.

Milherst Construction, Inc. certifies that all quantities, dimensions, specified performance criteria, installation requirements, materials, catalog numbers, and similar data with respect thereto have been reviewed or that each Shop Drawing or sample has been coordinated with other Shop Drawings and samples and with the requirements of the Work and Contract Documents.

By: Charles F. Kubiniec

Charles F. Kubiniec
Project Manager

☐ **APPROVED**
☐ **APPROVED AS CORRECTED**
(Resubmit final copy for file)
☒ **REVISE AND RESUBMIT BEFORE PROCEEDING**
☐ **NOT APPROVED**

See attached

Review only for conformance with the design concept of the project and with information given in the Contract Documents. The Contractor is responsible for: verifying that dimensions are confirmed and correlated at the job site; obtaining information that pertains to the fabrication processes or to techniques of construction, and: coordinating the work of all subcontractors.
STEARNS & WHELER, LLC Engineers and Scientists

By TJF Date 2/22/02

Comments
Submittal No. 30 Revision 1

Water Distribution System
Lehigh Valley Railroad Derailment Site
Site No. 8-19-014
Contract No. D004327

Paragraph 1	Detail what steps will be taken if material generated from rock trencher is not meeting gradation requirements.
Paragraph 2	OK
Paragraph 3	Change title of Subparagraph A. to "Bottom 1/3 of typical 6.5' trench is rock. (= 2' of rock)"
	Change title of Subparagraph B. to "Bottom 2/3 of typical 6.5' trench is rock. (= 2' to 4.5' of rock)"
	Change title of Subparagraph C. to "All trenches with rock greater then detailed above (> 4.5' of rock)"
	State depth of sand bedding/pipe zone is 2.5' in subparagraphs A and B
Paragraph 4	OK
Paragraph 5	OK

Milherst Construction, Inc.

2601 MILLERSPORT HWY. • P.O. BOX 631
GETZVILLE, NY • 14068-0631
(716) 688-9098 • FAX (716) 688-9562

February 11, 2002

Submittal 30 Revision 1
Procedure for Trench Backfill

This is a non-conforming submittal.

Section 02226, 3.03 Rock Removal-General, states, " Remove excavated materials from site".

This procedure alters the above specification as follows: "we shall remove excavated material over 6" in size and all material determined to be unsuitable for backfill from the site."

We can justify this variation by incorporating Section 02227-2, 3.03 A, which states "backfill with suitable excavated materials which can be satisfactorily compacted during refilling of the excavation".

In all cases the Engineer in consultation with MCWA will make the final decision as to suitability.

1. In areas where the Trencor Rock Trencher precedes the pipe crew.
   The material generated by the Trencor machine is similar to a –1" ROC select backfill and will be utilized as is.

2. In areas where the pipe trench is excavated with a backhoe. (no blasting or trench grinding)
   Care will be taken to separate out all rocks over 6" from the material to be used as backfill. Normally oversize rocks in an earth trench will roll to the outside of the excavated windrow and as such are easily picked out with the loader and separated for disposal off site. If it is determined that this separation to –6" is not effective; all excavation will be loaded and hauled to the Extec 6000 Screen and processed. The suitable excavated material will be returned to the trench for backfill per Section 02227-2, 3.03. The final decision as to suitability will be by the Engineer in consultation with MCWA.

3. In areas where the rock is blasted, a similar procedure as 2 above will be implemented except that the depth of rock will require variation:

   A. Bottom 1/3 of typical 6.5' trench is rock.

   In this case the blasted rock will be removed from the site and replaced by the sand bedding/pipe zone. Balance of suitable excavated material will remain as backfill.

   B. Bottom 2/3 of typical 6.5' trench is rock.

   In this case we will follow the procedure in 2 above. The volume of the sand bedding/pipe zone will be disposed of off site. The balance of the material will be separated to yield suitable backfill.

   C. If the trench is nearly all blasted rock.

   In this case all excavated material will be taken to the Screening plant and processed. In addition to removing rock over 6" the material will be blended with excess suitable backfill from other trenches to yield a suitable backfill. Select backfill will be imported in the event there is insufficient suitable material from our trenching operations.

4. Excess material generated by the Trencor machine will be stockpiled and available for areas where more fines are needed to produce a suitable backfill and for areas with insufficient suitable material.

5. The first place the screening plant will be set up is at the Genesee Country Museum. Later it will be set up within Dolomite Quarry on Flint Hill Road. Other sites may be found at a later date.

Introducing

EXTEC 6000

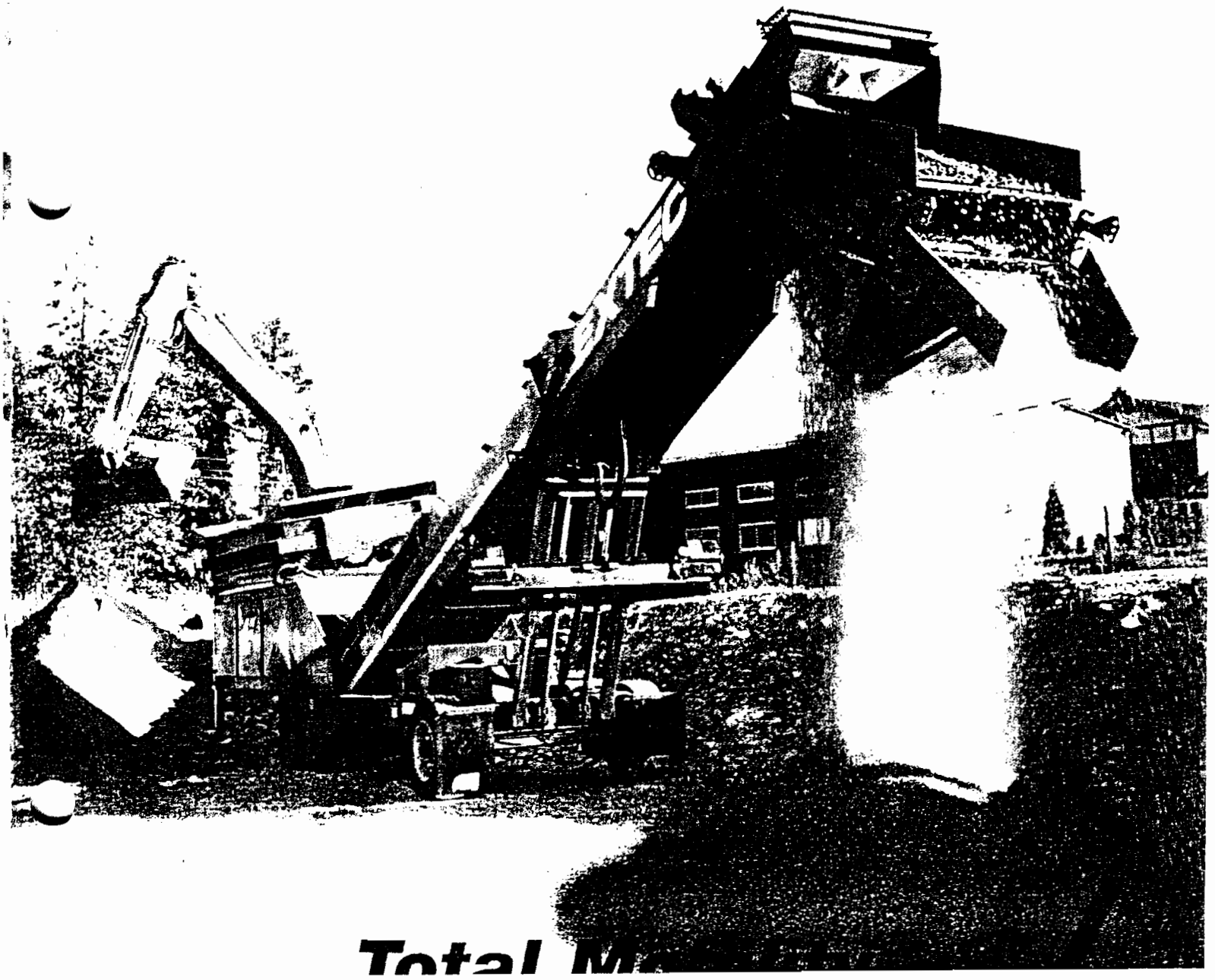

Total M

Specification

Power Unit: Deutz 67 hp (50 kw) Diesel Engine		**Power Unit: Deutz 67 hp (50 kw) Diesel Engine**	
Total Gross Weight	14,245 kg	Gesamtgewicht	14,245 kg
Overall Length (towing)	12.43 m	Gesamtlänge (transport)	12.43 m
Overall Width (towing)	2.75 m	Gesamtbreite (transport)	2.75 m
Overall Height (towing)	3.99 m	Höhe (transport)	3.99 m
Conveyor Belt Width	1.0 m	Band-Breite	1.0 m
Conveyor Belt Length	12.8 m	Band-Länge	12.8 m
Hydraulic System Capacity	350 ltrs	Fassungsvermögen hydraulisches System	350 ltrs

Moteur: Deutz 67 hp (50 kw) Diesel Engine		Unidad de potencia: Deutz 67 hp (50 kw) Diesel Engine	
Poids	14,245 kg	Remolcador	14,245 kg
Longeur (en transportation)	12.43 m	Longitud total (remolque)	12.43 m
Largeur (en transportation)	2.75 m	Ancho total	2.75 m
Hauteur (en transportation)	3.99 m	Altura total (remolque)	3.99 m
Largeur de convoyeur	1.0 m	Anchura de la cinta transportadora	1.0 m
Longeur du convoyeur	12.8 m	Longitud de la cinta transportadora	12.8 m
Capacité du système hydraulique	350 ltrs	Capacidad del sistema hidráulico	350 ltrs

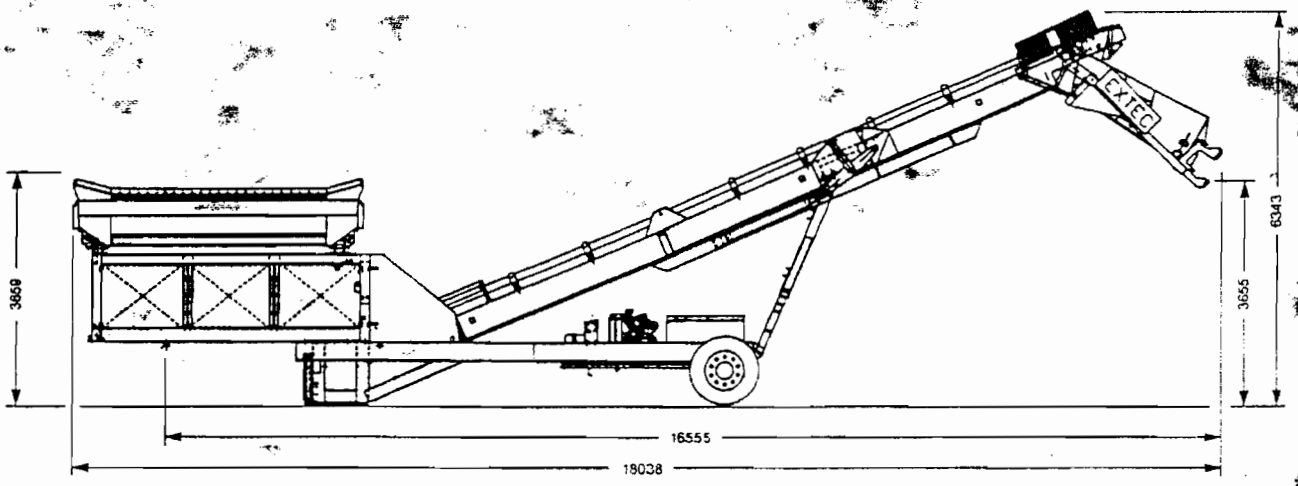

Douglas Siebtechnik GmbH.
Am Frauenberg 2,
36280 Oberaula,
Deutschland.
Telefon 06628 9211-0
Telefax 06628 9211-11

Extec of North America.
Tinicum Industrial Park.
10 Industrial Highway.
Lester PA 19113.
USA.
Telephone 1-800-44 SCREEN
PHIL (610)-521 6344

Extec Screens and Crushers Ltd.,
Hearthcote Road.
Swadlincote.
Derbyshire DE11 9DU.
England.
Telephone +44 (0)1283 212121
Fax +44 (0)1283 217342

Contact Extec for your nearest dealer

Extec reserves the right to change specification without prior notice

Extec provides extensive worldwide customer support and service back-up. Being a true international organisation, Extec has distributors and dealers

Póngase en contacto con el proveedor de Extec más cercano

Extec se reserva el derecho a modificar las especificaciones técnicas sin previo aviso

Milherst Construction, Inc.
P.O. Box 631
Getzville, New York 14068

Phone (716) 688-9098
Fax (716) 688-9562

Submittal No. 30 Revision 2

Lehigh Valley RR Derailment Site

Owner NYS Department of Environmental Conservation
Bureau of Construction Services, 12th Floor
625 Broadway
Albany, NY 12233-7013

Contractor Milherst Construction, Inc

Date February 28, 2002

Item: Procedure for Trench Backfill

Specification:

Section: 02227

Page No.: 02227-2

Para. No.: 3.03 - F

Drawing No.:

Location: Various

Refer to addendum and discussion at Job Meetings.
MCWA requires backfill to be a suitable mix of earth, gravel, rock - all less than 6" material - such that the trench is not difficult to re-excavate for maintenance purposes or so open that a french drain is created.

Attached: Details of EXTEC 6000 Screening Plant.
Narative on proposed proceedures.

Milherst Construction, Inc. certifies that all quantities, dimensions, specified performance criteria, installation requirements, materials, catalog numbers, and similar data with respect thereto have been reviewed or that each Shop Drawing or sample has been coordinated with other Shop Drawings and samples and with the requirements of the Work and Contract Documents.

By: Charles F. Kubiniec

Charles F. Kubiniec
Project Manager

☒ **APPROVED**

☐ **APPROVED AS CORRECTED**
(Resubmit final copy for file)

☐ **REVISE AND RESUBMIT BEFORE PROCEEDING**

☐ **NOT APPROVED**

Review only for conformance with the design concept of the project and with information given in the Contract Documents. The Contractor is responsible for: verifying that dimensions are confirmed and correlated at the job site; obtaining information that pertains to the fabrication processes or to techniques of construction, and: coordinating the work of all subcontractors.
STEARNS & WHELER, LLC Engineers and Scientists

By TJF **Date** 3/17/02

Milherst Construction, Inc.

2601 MILLERSPORT HWY. • P.O. BOX 631
GETZVILLE, NY • 14068-0631
(716) 688-9098 • FAX (716) 688-9562

February 28, 2002

Submittal 30 Revision 2
Procedure for Trench Backfill

This is a non-conforming submittal.

Section 02226, 3.03 Rock Removal-General, states, " Remove excavated materials from site".

This procedure alters the above specification as follows: "we shall remove excavated material over 6" in size and all material determined to be unsuitable for backfill from the site."

We can justify this variation by incorporating Section 02227-2, 3.03 A, which states "backfill with suitable excavated materials which can be satisfactorily compacted during refilling of the excavation".

In all cases the Engineer in consultation with MCWA will make the final decision as to suitability.

1. In areas where the Trencor Rock Trencher precedes the pipe crew.
   The material generated by the Trencor machine is similar to a –1" ROC select backfill and will be utilized as is.
   If the backfill material generated by the trencher does not meet the gradation required, Milherst will implement procedure 2. or 3. below as appropriate.
2. In areas where the pipe trench is excavated with a backhoe. (no blasting or trench grinding)
   Care will be taken to separate out all rocks over 6" from the material to be used as backfill. Normally oversize rocks in an earth trench will roll to the outside of the excavated windrow and as such are easily picked out with the loader and separated for disposal off site. If it is determined that this separation to –6" is not effective; all excavation will be loaded and hauled to the Extec 6000 Screen and processed. The suitable excavated material will be returned to the trench for backfill per Section 02227-2, 3.03. The final decision as to suitability will be by the Engineer in consultation with MCWA.

3. In areas where the rock is blasted, a similar procedure as 2 above will be implemented except that the depth of rock will require variation:

   A. Bottom 1/3 of typical 6.5' trench is rock. (=2' of rock)
   In this case the blasted rock will be removed from the site and replaced by the 2.5' sand bedding/pipe zone. Balance of suitable excavated material will remain as backfill.

   B. Bottom 2/3 of typical 6.5' trench is rock. (=2' to 4.5' of rock)
   In this case we will follow the procedure in 2 above. The volume of the 2.5' sand bedding/pipe zone will be disposed of off site. The balance of the material will be separated to yield suitable backfill.

   C. All trenches with rock greater than detailed above. (>4.5' of rock)
   In this case all excavated material will be taken to the Screening plant and processed. In addition to removing rock over 6" the material will be blended with excess suitable backfill from other trenches to yield a suitable backfill. Select backfill will be imported in the event there is insufficient suitable material from our trenching operations.

4. Excess material generated by the Trencor machine will be stockpiled and available for areas where more fines are needed to produce a suitable backfill and for areas with insufficient suitable material.

5. The first place the screening plant will be set up is at the Genesee Country Museum. Later it will be set up within Dolomite Quarry on Flint Hill Road. Other sites may be found at a later date.

Introducing

EXTEC 6000

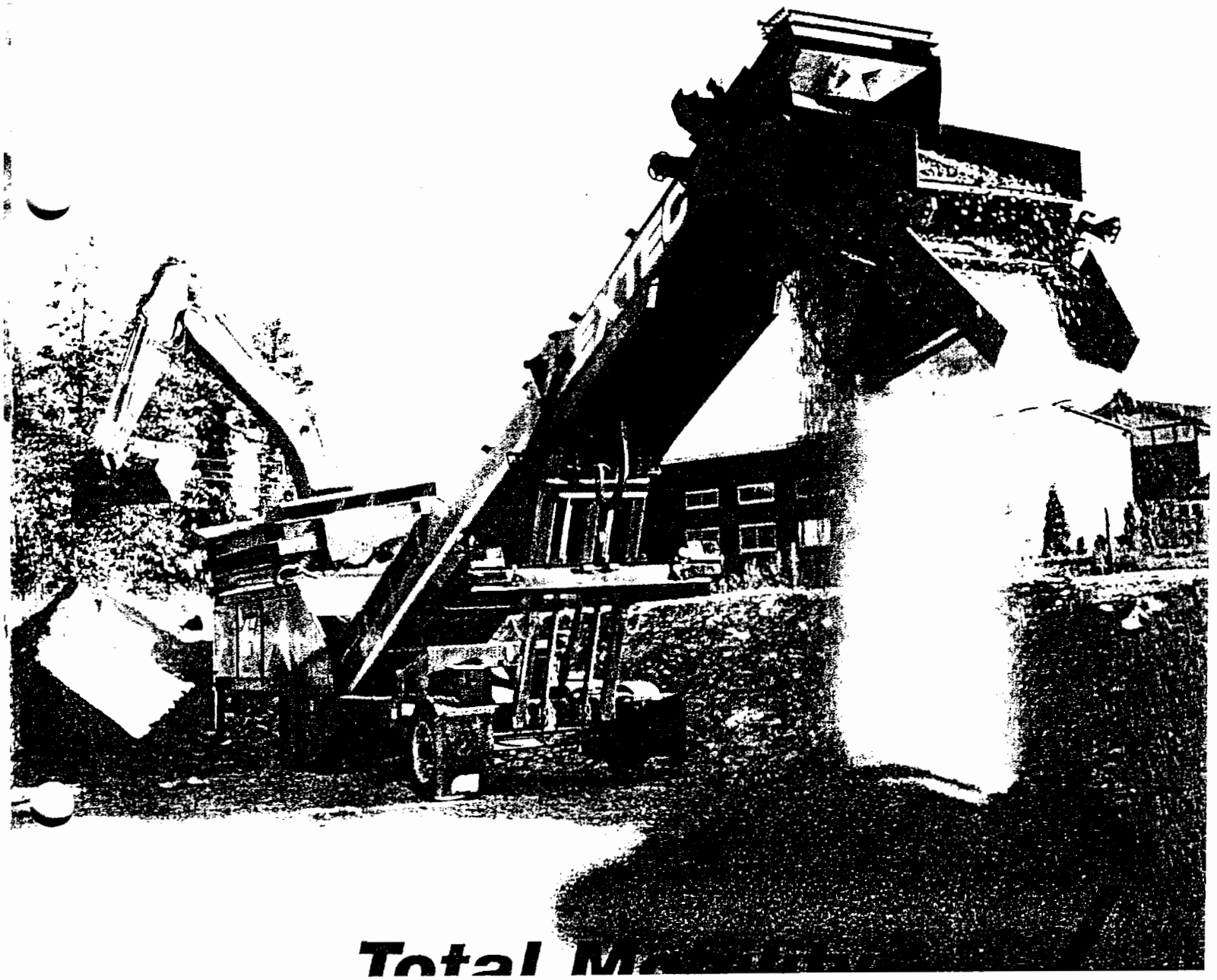

Total M

Specification

Power Unit: Deutz 67 hp (50 kw) Diesel Engine		[illegible]
Total Gross Weight	14,245 kg	[illegible] 14,245 kg
Overall Length (towing)	12.43 m	[illegible] 12.43 m
Overall Width (towing)	2.75 m	[illegible] 2.75 m
Overall Height (towing)	3.99 m	[illegible] 3.99 m
Conveyor Belt Width	1.0 m	[illegible] 1.0 m
Conveyor Belt Length	12.8 m	[illegible] 12.8 m
Hydraulic System Capacity	350 ltrs	[illegible] 350 ltrs

Moteur: Deutz 67 hp (50 kw) Diesel Engine		Unidad de potencia: Deutz 67 hp (50 kw) Diesel Engine	
Poids	14,245 kg	Remolcador	14.245 kg
Longeur (en transportation)	12.43 m	Longitud total (remolque)	12.43 m
Largeur (en transportation)	2.75 m	Ancho total	2.75 m
Hauteur (en transportation)	3.99 m	Altura total (remolque)	3.99 m
Largeur de convoyeur	1.0 m	Anchura de la cinta transportadora	1.0 m
Longeur du convoyeur	12.8 m	Longitud de la cinta transportadora	12.8 m
Capacité du système hydraulique	350 ltrs	Capacidad del sistema hidráulico	350 ltrs

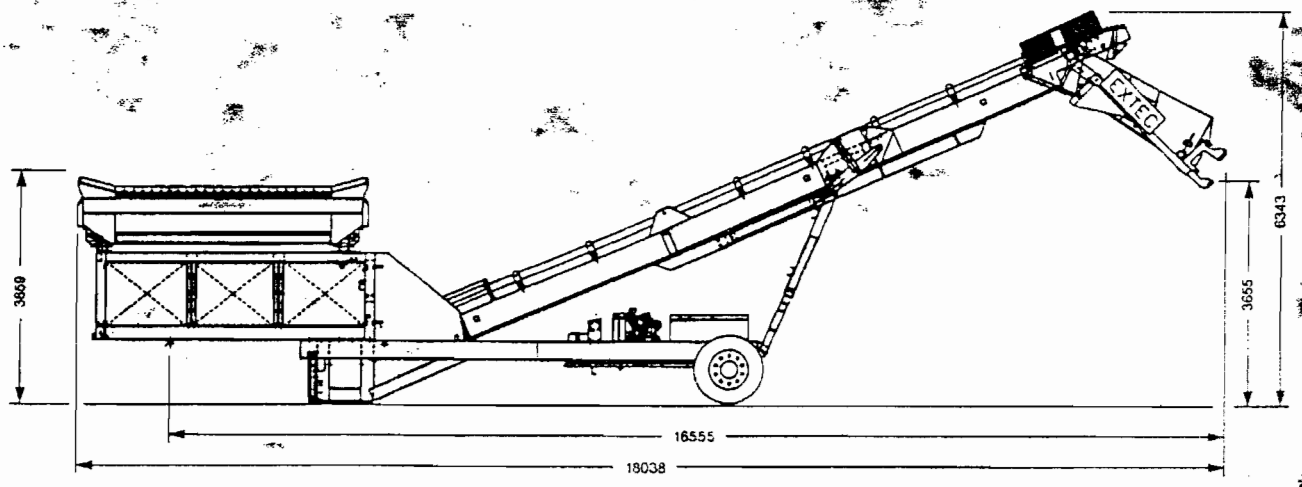

Douglas Siebtechnik GmbH.
Am Frauenberg 2,
36280 Oberaula,
Deutschland.
Telefon 06628 9211-0
Telefax 06628 9211-11

Extec of North America.
Tinicum Industrial Park.
10 Industrial Highway.
Lester PA 19113.
USA.
Telephone 1-800-44 SCREEN
PHIL (610)-521 6344

Extec Screens and Crushers Ltd..
Hearthcote Road.
Swadlincote.
Derbyshire DE11 9DU.
England.
Telephone +44 (0)1283 212121
Fax +44 (0)1283 217342

Contact Extec for your nearest dealer

Extec reserves the right to change specification without prior notice

Extec provides extensive worldwide customer support and service back-up. Being a true international organisation, Extec has distributors and dealers

Póngase en contacto con el proveedor de Extec más cercano

Extec se reserva el derecho a modificar las especificaciones técnicas sin previo aviso

Milherst Construction, Inc.
P.O. Box 631
Getzville, New York 14068

Phone (716) 688-9098
Fax (716) 688-9562

Submittal No.31

Lehigh Valley RR Derailment Site

Owner NYS Department of Environmental Conservation
Bureau of Construction Services, 12th Floor
625 Broadway
Albany, NY 12233-7013

Contractor Milherst Construction, Inc

Date January 17, 2002

Item: Manhole for 1-1/2" Service Meter

Specification:

Section: Bid Item 14C
Page No.: N/A
Para. No.: N/A
Drawing No.: Sheet G-31
Location: Genesee Country Museum

Milherst Construction, Inc. certifies that all quantities, dimensions, specified performance criteria, installation requirements, materials, catalog numbers, and similar data with respect thereto have been reviewed or that each Shop Drawing or sample has been coordinated with other Shop Drawings and samples and with the requirements of the Work and Contract Documents.

By: Charles F. Kubiniec

Charles F. Kubiniec
Project Manager

☒ **APPROVED**
☐ **APPROVED AS CORRECTED**
(Resubmit final copy for file)

☐ **REVISE AND RESUBMIT BEFORE PROCEEDING**
☐ **NOT APPROVED**

Review only for conformance with the design concept of the project and with information given in the Contract Documents. The Contractor is responsible for: verifying that dimensions are confirmed and correlated at the job site; obtaining information that pertains to the fabrication processes or to techniques of construction, and: coordinating the work of all subcontractors.
STEARNS & WHELER, LLC Engineers and Scientists

By TJF **Date** 2/13/02

KISTNER CONCRETE PRODUCTS INC.
8713 READ ROAD
E. PEMBROKE, N.Y.
14058
(716) 894-2267

PRODUCT DESIGNATION

MANHOLE TAKE-OFF FLAT TOP

DWG. NO.
MH-MHTOFT ©
12-26-95

EL. _____
BOOT RANGE _____
_____ SUMP

EL. _____
BOOT RANGE _____
_____ SUMP

EL. _____
BOOT RANGE _____
_____ SUMP

EL. _____
BOOT RANGE _____
4"Ø HOLE
4" SUMP

EL. _____
BOOT RANGE _____
_____ SUMP

EL. _____
BOOT RANGE _____
_____ SUMP

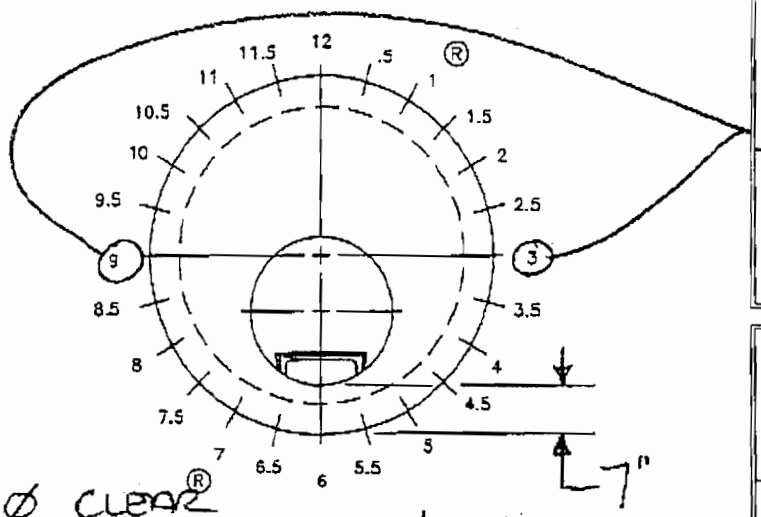

36"Ø CLEAR® OPENING OFFSET

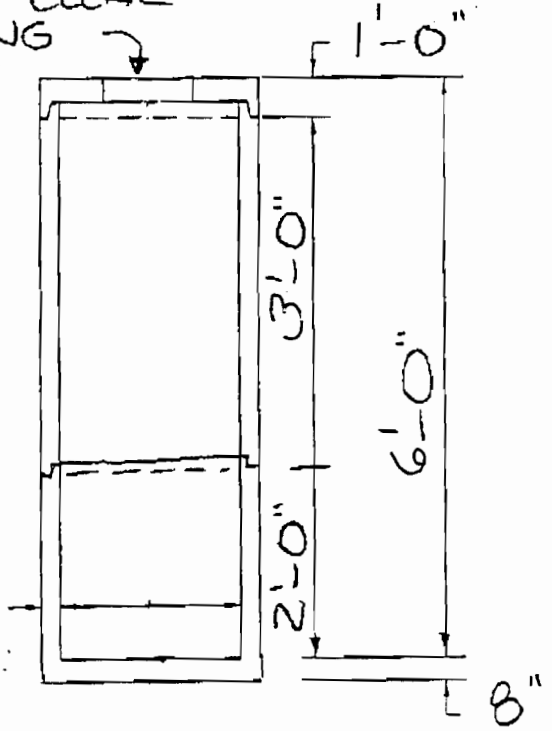

DOGHOUSE CENTERS HAVE ONLY BOTTOM STEPS OMITTED.

RIM:	7'-0"
INV.:	6.66'
DIFF.:	.34'
F&C & ADJ.:	-1.00
INV. TO T.P.:	5.66
SUMP: +	.34
TBS TO T.P.:	7.00

7'
7'

SHOP DWG
FOR PIPE ALIGNMENT AND ELEVATION ONLY

UNIT NO.	STA. NO.	DIAMETER	LOT NO.
MM	Item 14C	4'Ø	

NOTE:	STANDARD BASE	FLANGED BASE	COATINGS IN	COATINGS OUT	GASKETS RUBBER
YES	____				____
NO		____	____	____	

NOTE:	PRECAST STEP HOLES	MANHOLE STEPS STANDARD	MANHOLE STEPS LONG	ROOF OPNG. 24"	ROOF OPNG. SPECIAL
YES	____		____		36"Ø
NO		____		____	

PROJECT: LEHIGH VALLEY WATER MAIN
LOCATION: LEROY, NY
ENGINEER: STEARNS & WHEELER
CO: MILHERST CONSTRUCTION INC. ID/Status 1342
OFC.C... JIM JR. / CHIP Ph: 716-688-9098
FIELD CONT: Fax 716-688-9562
JOB PHONE: JOB FAX: [0] - -
JOB MOBILE: JOB PGR:
SALESMAN 06-CJC P.O. #:

MILHERST CONSTRUCTION INC. 2 of 6

KISTNER CONCRETE PRODUCTS INC.
8713 READ ROAD
E. PEMBROKE, N.Y.
14056
(716) 894-2257

PRODUCT DESIGNATION

MANHOLE 4' DIA.

DWG. NO.
MH-MH4SAN ©
5-29-01

ALTERNATE TOP SLAB IS STEEL REINFORCED TO MEET OR EXCEED HS-20 LOADING.

1" SQ. BUTYL JOINT MATERIAL SEAL

3" RISER RINGS AS REQUIRED

Special 36"

24" DIA. STANDARD

8"

1'-0" THRU 2'-6" 6" INCREMENTS

4'-0" DIA.

NOTE:
STEEL REINFORCED COPOLYMER POLYPROPYLENE PLASTIC STEP CONFORMS TO LATEST A.S.T.M. C478 PARA.11 SPEC.

FACTORY LUBED OFFSET GASKET JOINT CONFORMS TO LATEST A.S.T.M. C443 SPEC.

PS2-PFS	POLYPROPYLENE STEP		A X
FACTORY LUBED OFFSET GASKET	SECTION JOINT		B X
PIPE TO MANHOLE CONNECTIONS	HOLE PIPE TO FIT	PIPE SIZE:	C1 X
PIPE TO MANHOLE CONNECTIONS	WATERTIGHT BOOT	PIPE SIZE:	C2

8" 24" DIA. STAND.

BITUMASTIC COATINGS (IF REQ'D)
☐ INSIDE
☐ OUTSIDE
☒ NONE

12" TYP.

DET. A IF REQ'D

ECCENTRIC CONE SECTION 2'-6", 3'-6", 4'-6"

DET. B IF REQ'D

RISER SECTION 1'-0" THRU 6'-0" IN 1'-0" INCREMENTS

4'-0" DIA. 5"

BASE SECTION 2'-0", 3'-0", 3'-6", 4'-6" MONOLITHIC BASE

PIPE TO MH. CONN. DET. C1, C2 (SIZE TO SUIT)

4" Diameter

☐ OPTIONAL 8" THK. X 8" FLANGE

☐ OPTIONAL 8" THK. BASE SLAB

☒ STANDARD BASE 8" TK.

NOTES 1 AND 4

4"

BASE SECTION TO BE SET PER JOB SPECIFICATIONS

GENERAL NOTES:
1. REINFORCED STEEL CONFORMS TO LATEST A.S.T.M. A185 SPEC. 0.12 SQ. IN./LINEAL FT. AND 0.12 SQ. IN. (BOTH WAYS) IN BASE SLAB.
2. CONCRETE COMPRESSIVE STRENGTH - 4000 PSI MINIMUM.
3. MANHOLE DESIGN SPECIFICATIONS CONFORM TO LATEST A.S.T.M. C478 SPEC. FOR PRECAST REINFORCED CONCRETE MANHOLE SECTIONS.
4. SINGLE POUR MONOLITHIC BASE SECTION.

MILHERST CONSTRUCTION INC. 3 of 6

FACTORY LUBRICATED MANHOLE GASKETS ASSEMBLY PROCEDURES

FOR 4' DIA. SINGLE OFFSET JOINT ONLY

CODE: MH-INSTALL-OSG

Advantages

- Self contained lubricant
- No threat of lubricant contamination or deterioration
- Saves time and mess of lubricant application especially in adverse conditions
- No equalization required

STEP 1

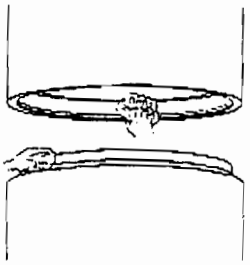

Carefully clean and inspect the manhole bell.

Carefully clean and inspect the manhole spigot, especially in the step area where gasket will be seated.

WARNING: IMPROPERLY CLEANED OR DAMAGED BELL AND SPIGOT SURFACES MAY PREVENT HOMING OF THE MANHOLE OR KEEP THE GASKET FROM SEALING.

PRINTING MUST BE ON OUTSIDE

STEP 2

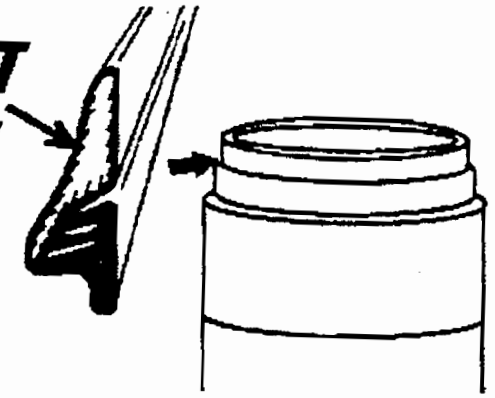

Factory lubed gasket should be positioned firmly in the step of the spigot.
USE NO FIELD LUBRICANT!
USE NO BUTYL!

WARNING: GASKET NOT POSITIONED FIRMLY IN STEP MAY CAUSE LEAKS.

STEP 3

Lower manhole sections together slowly and level.

STEP 4

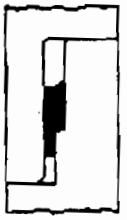

The mantle section of the factory lubed gasket rolls over the compression area and comes to rest in the small annular space creating a watertight seal and preventing concrete to concrete contact.

WARNING: USE NO CONVENTIONAL LUBRICANT OR BUTYL WHATSOEVER.
Using lubricant may dislodge gasket from step of spigot or prevent the mantle from being drawn into small annular space causing leaks or breaking the bell. Using butyl sealant may cause a gap in joint and prevent gasket from being completely engaged in joint area.

WARNING: If any joint problems arise, contact the East Pembroke Sales Office immediately. DO NOT force manhole sections together.

The Leading Manufacturer of Precast Concrete Products
Kistner Concrete Products, Inc.
Phone 716-762-8213

FACTORY LUBRICATED MANHOLE GASKETS

Factory Lubricated Manhole Gaskets: A distinct innovation that becomes the total solution in the joint sealing of manhole bases and riser sections.

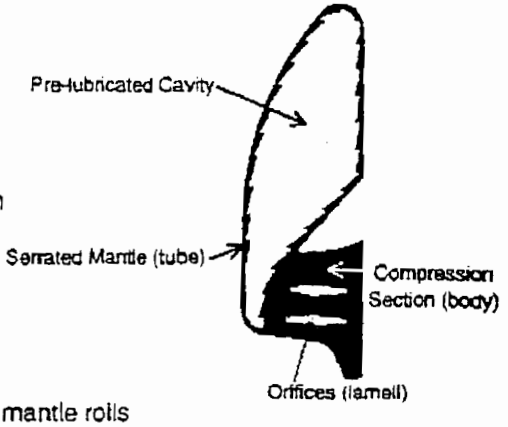

Advantages

Unique Design
- Self contained lubricant
- No special handling or packaging
- No threat of lubricant contamination or deterioration
- Saves time and mess of lubricant application
- No equalization required
- No butyl required

Function

Factory lubricated gaskets have silicone lubricant encapsulated in the tube. During pipe assembly the mantle rolls over the compression area of the gasket resulting in a watertight seal.

Installation

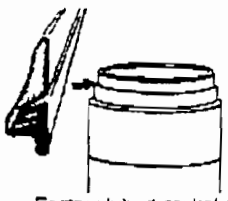

Factory lubed gasket should be positioned firmly in the step of the spigot.

Lower manhole section slowly and lower onto spigot

The mantle section of the factory lubed gasket rolls over the compression area and comes to rest in the small annular space creating a watertight seal and preventing concrete to concrete contact.

WARNING: USE NO CONVENTIONAL LUBRICANT WHATSOEVER.

Using lubricant may dislodge gasket from step of spigot or prevent the mantle from being drawn into small annular space causing leaks or breaking the bell.

Material Specifications

Factory lubricated gaskets are manufactured from top quality rubber. All gasket material conforms to or exceeds C.S.A. A-257, A.S.T.M. C-443, and C-361 specifications.

Quality Control

Our state of the art production and laboratory facilities, as well as our staff of competent engineers, and technicians, work together to ensure the highest quality precast products available today.

Service

For more than half a century, Kistner Concrete Products, Inc. has been the leader in the manufacture of precast concrete in Western New York. Our complete line of products, ongoing research and development programs, and a knowledgeable sales staff, continue to make us number one and second to none within the industry.

The Leading Manufacturer of Precast Concrete Products
Kistner Concrete Products, Inc.
8713 Read Road P.O. Box 218
East Pembroke, New York 14056
Phone 716-762-8216 Fax 716-762-8315
www.kistner.com

word[wmk\lubedgaskets] Rev. 4/5/01

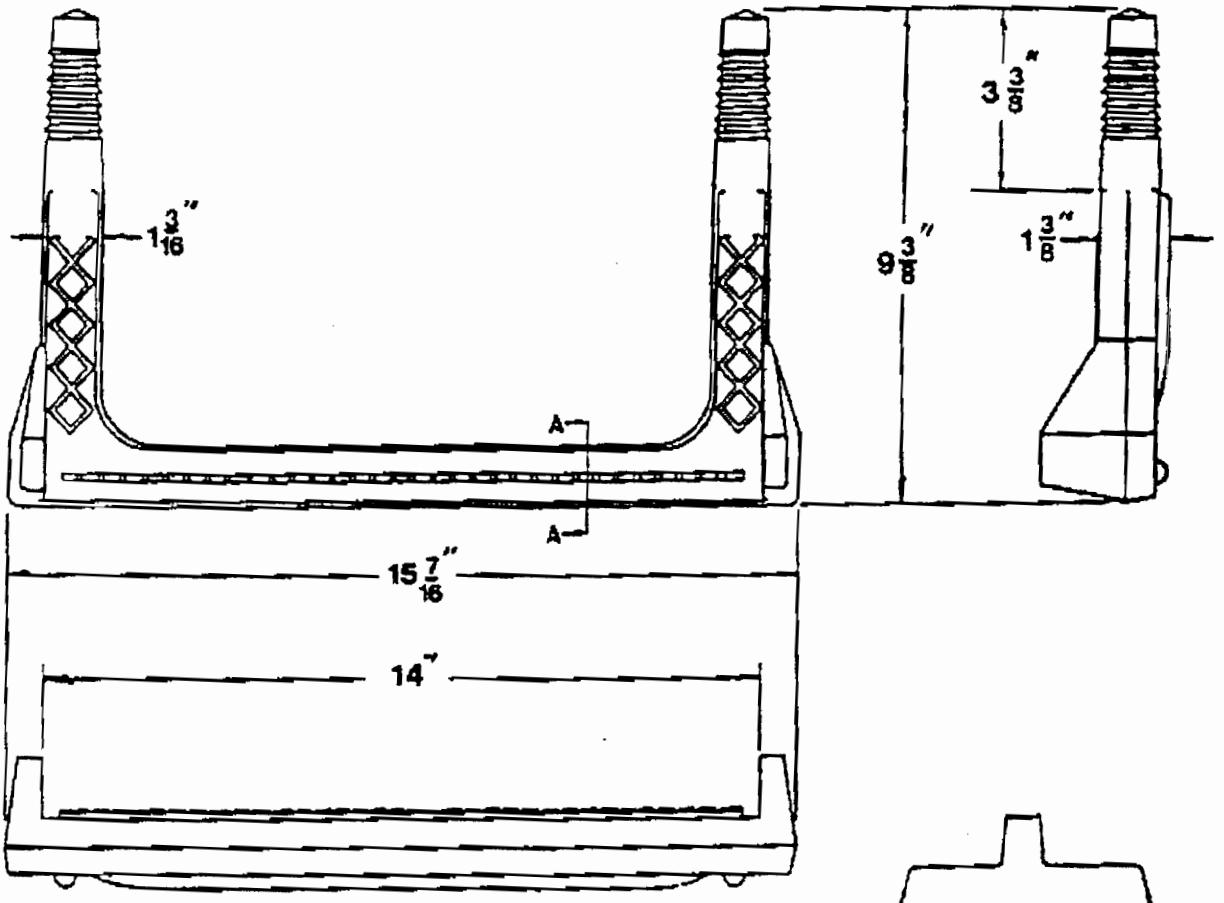

Copolymer Polypropylene Plastic

½" GRADE 60 STEEL REINFORCEMENT

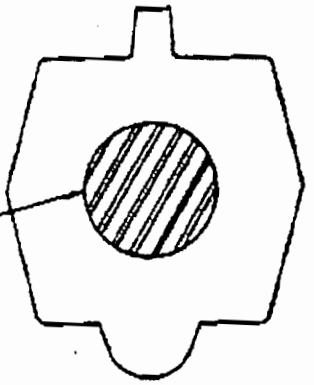

SECTION-A

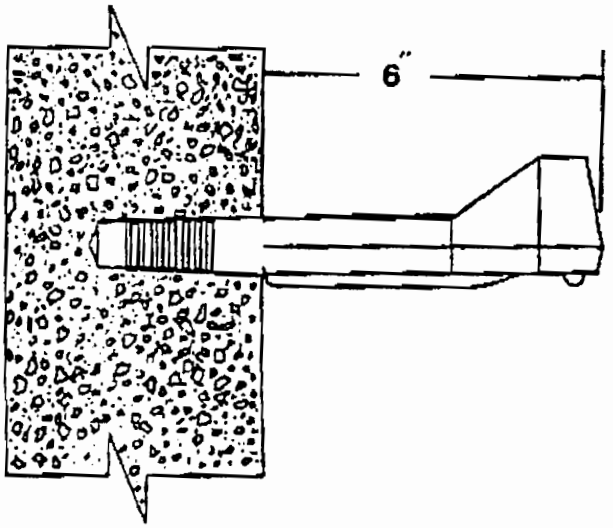

PS2-PF

Manhole Step

M.A. Industries Inc.
Kelley & Dividend Dr.
Peachtree City Ga.

MILHERST CONSTRUCTION INC. 7/31/91

Milherst Construction, Inc.
P.O. Box 631
Getzville, New York 14068

Phone (716) 688-9098
Fax (716) 688-9562

Submittal No.32

Lehigh Valley RR Derailment Site

Owner NYS Department of Environmental Conservation
Bureau of Construction Services, 12th Floor
625 Broadway
Albany, NY 12233-7013

Contractor Milherst Construction, Inc
Date January 17, 2002

Item: Foamglas Insulation Systems

Specification:

Section: Watermain Insulation Detail
Page No.: N/A
Para. No.: N/A
Drawing No.: Sheet G-29
Location: Various if Required

Milherst Construction, Inc. certifies that all quantities, dimensions, specified performance criteria, installation requirements, materials, catalog numbers, and similar data with respect thereto have been reviewed or that each Shop Drawing or sample has been coordinated with other Shop Drawings and samples and with the requirements of the Work and Contract Documents.

By: Charles F. Kubiniec

Charles F. Kubiniec
Project Manager

1. Thickness of insulation? (2" minimum)
2. Need information on jacketing (HDPE-?)
3. R Value? (minimum 3)

☐ **APPROVED**
☐ **APPROVED AS CORRECTED**
(Resubmit final copy for file)
☒ **REVISE AND RESUBMIT BEFORE PROCEEDING**
☐ **NOT APPROVED**

Review only for conformance with the design concept of the project and with information given in the Contract Documents. The Contractor is responsible for: verifying that dimensions are confirmed and correlated at the job site; obtaining information that pertains to the fabrication processes or to techniques of construction, and: coordinating the work of all subcontractors.
STEARNS & WHELER, LLC Engineers and Scientists

By TJF Date 2/25/02

32

SUPERTEX
INSULATION DISTRIBUTORS, INC.
Job: Lehigh Valley R.R. Derailment Site
Item: Insulation for
Descr: Waterline
Reviewed By: CFK
Date: 2-15-02

FOAMGLAS
INSULATION SYSTEMS

FOR UNDERGROUND AND DIRECT BURIAL APPLICATIONS

PITTSBURGH CORNING CORPORATION

THE IDEAL UNDERGROUND INSULATION SYSTEM

The ideal insulation system must be capable of meeting the mechanical and corrosion resistance requirements of direct burial while providing long-term insulation efficiency. Ignoring these basic considerations may result in problems.

The direct burial of insulated pipelines is often the most practical method of installing underground piping systems. This method eliminates the need for costly tunnels and speeds the installation of the piping system.

The FOAMGLAS® Insulation System consists of FOAMGLAS® cellular glass insulation and flexible PITTWRAP® jacketing. It is the ideal system for direct burial underground.

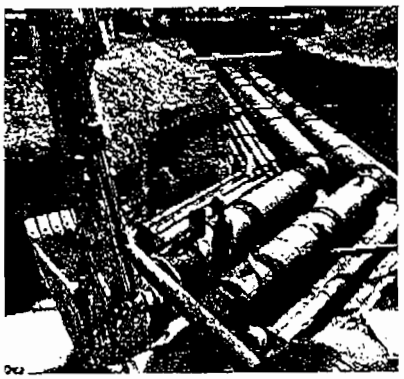

FOAMGLAS® insulation's excellent compressive strength permits direct underground burial.

FOAMGLAS® insulation is:

- Highly resistant to soil moisture in liquid or vapor form
- Unaffected by soil acids
- Chemically inert
- Strong enough for direct burial with no protective tunnels needed

On hot, buried systems located in a high water table area, improperly sealed systems may allow moisture entry into the system. High temperature water or steam in long-term contact with FOAMGLAS® insulation will result in chemical attack with a gradual penetration of the insulation cells.

The success of a direct burial system will depend to a great extent upon the system chosen, proper design and proper installation. Some of the key considerations which should be addressed by the design professionals prior to selecting a particular insulation system are:

- Type of system: chilled water, hot water, steam or other
- Operating temperatures of all pipes, constant or cycling
- Pipe length, diameter, spacing, burial depth, number and nature of runouts
- Soil type, bearing strength, electrical potential
- Location of water table
- Control of expansion/contraction (see Figures 1 and 2 for typical expansion/contraction values of various metals)
  - number of expansion loops and their size
  - number of ells or zees
  - number of expansion bellows, size
  - number of guides and location
  - number of anchors and location
- Manhole location, size, material, connections
- Other conditions
  - road crossing
  - depth below road
  - traffic loads
  - will any portion of line be in tunnels or above ground
  - other utilities near or crossing line

TABLE 1: Physical and Thermal Properties of FOAMGLAS® Insulation

PHYSICAL PROPERTIES	USA	METRIC	SI	ASTM TEST
Absorption of Moisture (% by volume)	0.2%			C 240
	Only moisture retained is that adhering to surface cells after immersion.			
Water-Vapor Permeability	0.0 perm-in	0.0 perm-in		E 96
Acid Resistance	Impervious to common acids and their fumes except hydrofluoric acid.			
Capillarity	None	None	None	
Combustibility	Noncombustible, will not burn.			E 136
Composition	Pure glass, totally inorganic, contains no binder.			
Compressive strength for standard material	100 psi	7.0 kg/cm²	689 kPa	C 165, C 240 C 552-91
	Strength for flat surfaced capped with hot asphalt, different capping will give different values.			
Density, Average	8 lb/ft³	128 kg/m³	128 kg/m³	C 303
Dimensional Stability	Excellent—does not shrink, swell or warp.			
Flexural Strength, Block Average	80 psi	5.6 kg/cm²	552 kPa	C 203, C 240
Hygroscopicity	No increase in weight at 90% relative humidity.			
Linear Coefficient of Thermal Expansion (25 to 300°C)	4.9 X 10⁻⁶/°F	8.8 X 10⁻⁶/°C	8.8 X 10⁻⁶/°K	E 228
Maximum Service Temperature	+900°F	+482°C	755°K	
Modulus of Elasticity, Approx.	1.4 x 10⁶ psi	9,400 kg/cm²	965 MPa	C 623
Shear Strength	No reliable recognized test method for determination of the shear strength for cellular glass exists at this time. Where shear strength is a design criterion PCC should be contacted for recommendations.			
Thermal Conductivity	Btu-in/hr-ft²-°F	kcal/m-h-°C	W/mK	C 177, C 518
	0.32 @ 75°F	0.037 @ 0°C	0.043 @ 0°C	
	0.31 @ 50°F	0.038 @ 10°C	0.044 @ 10°C	
Specific Heat	0.20 Btu/lb-°F	0.20 kcal/kg-°C	0.84 kJ/kg-°K	
Thermal Diffusivity	0.017 ft²/hr	0.0043 cm²/sec	4.3 x 10⁻⁷ m²/sec	

NOTE: Properties at 75°F unless otherwise specified. Properties may vary with temperature.

Milherst Construction, Inc.
P.O. Box 631
Getzville, New York 14068

Phone (716) 688-9098
Fax (716) 688-9562

Submittal No.32 Revision 1

Lehigh Valley RR Derailment Site

Owner NYS Department of Environmental Conservation
Bureau of Construction Services, 12th Floor
625 Broadway
Albany, NY 12233-7013

Contractor Milherst Construction, Inc
Date February 28, 2002

Item: Watermain Insulation

Watermain detail (G-29) spec's Pittsburg Corning
This submittal conforms to Pittsburg Corning
This submittal does not conform to HDPE Jacketing.
This submittal uses Pittwrap Jacketing because Pittwrap is recommended by Pittsburg Corning for direct underground burial.

Specification:
Section: N/A
Page No.: N/A
Para. No.: N/A
Drawing No.: Sheet G-29
Location: Various if required

Milherst Construction, Inc. certifies that all quantities, dimensions, specified performance criteria, installation requirements, materials, catalog numbers, and similar data with respect thereto have been reviewed or that each Shop Drawing or sample has been coordinated with other Shop Drawings and samples and with the requirements of the Work and Contract Documents.

By: Charles F. Kubiniec

Charles F. Kubiniec
Project Manager

X APPROVED
☐ APPROVED AS CORRECTED
(Resubmit final copy for file)
☐ REVISE AND RESUBMIT BEFORE PROCEEDING
☐ NOT APPROVED

Review only for conformance with the design concept of the project and with information given in the Contract Documents. The Contractor is responsible for: verifying that dimensions are confirmed and correlated at the job site; obtaining information that pertains to the fabrication processes or to techniques of construction, and: coordinating the work of all subcontractors.
STEARNS & WHELER, LLC Engineers and Scientists

By TJF Date 3/17/02

32

Job: Lehigh Valley R.R.
Derailment Pits
Item: Insulation for
Descr: Waterline
Reviewed By: CFK
Date: 2-18-02

32 Rev. 1

FOAMGLAS

INSULATION SYSTEMS

FOR UNDERGROUND AND DIRECT BURIAL APPLICATIONS

PITTSBURGH CORNING CORPORATION

32 Rev. 1 Pg. 5

THE IDEAL UNDERGROUND INSULATION SYSTEM

The ideal insulation system must be capable of meeting the mechanical and corrosion resistance requirements of direct burial while providing long-term insulation efficiency. Ignoring these basic considerations may result in problems.

The direct burial of insulated pipelines is often the most practical method of installing underground piping systems. This method eliminates the need for costly tunnels and speeds the installation of the piping system.

The FOAMGLAS® Insulation System consists of FOAMGLAS® cellular glass insulation and flexible PITTWRAP® jacketing. It is the ideal system for direct burial underground.

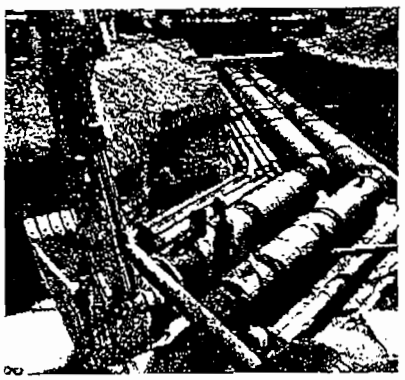

FOAMGLAS® insulation's excellent compressive strength permits direct underground burial.

FOAMGLAS® insulation is:

- Highly resistant to soil moisture in liquid or vapor form
- Unaffected by soil acids
- Chemically inert
- Strong enough for direct burial with no protective tunnels needed

On hot, buried systems located in a high water table area, improperly sealed systems may allow moisture entry into the system. High temperature water or steam in long-term contact with FOAMGLAS® insulation will result in chemical attack with a gradual penetration of the insulation cells.

The success of a direct burial system will depend to a great extent upon the system chosen, proper design and proper installation. Some of the key considerations which should be addressed by the design professionals prior to selecting a particular insulation system are:

- Type of system: chilled water, hot water, steam or other
- Operating temperatures of all pipes, constant or cycling
- Pipe length, diameter, spacing, burial depth, number and nature of runouts
- Soil type, bearing strength, electrical potential
- Location of water table
- Control of expansion/contraction (see Figures 1 and 2 for typical expansion/contraction values of various metals)
  - number of expansion loops and their size
  - number of ells or zees
  - number of expansion bellows, size
  - number of guides and location
  - number of anchors and location
- Manhole location, size, material, connections
- Other conditions
  - road crossing
  - depth below road
  - traffic loads
  - will any portion of line be in tunnels or above ground
  - other utilities near or crossing line

TABLE 1: Physical and Thermal Properties of FOAMGLAS® Insulation

PHYSICAL PROPERTIES	USA	METRIC	SI	ASTM TEST
Absorption of Moisture (% by volume)	0.2%			C 240
	Only moisture retained is that adhering to surface cells after immersion.			
Water-Vapor Permeability	0.0 perm-in	0.0 perm-in		E 96
Acid Resistance	Impervious to common acids and their fumes except hydrofluoric acid.			
Capillarity	None	None	None	
Combustibility	Noncombustible, will not burn.			E 136
Composition	Pure glass, totally inorganic, contains no binder.			
Compressive strength for standard material	100 psi	7.0 kg/cm²	689 kPa	C 165, C 240 C 552-91
	Strength for flat surfaced capped with hot asphalt, different capping will give different values.			
Density, Average	8 lb/ft³	128 kg/m³	128 kg/m³	C 303
Dimensional Stability	Excellent—does not shrink, swell or warp.			
Flexural Strength, Block Average	80 psi	5.6 kg/cm²	552 kPa	C 203, C 240
Hygroscopicity	No increase in weight at 90% relative humidity.			
Linear Coefficient of Thermal Expansion (25 to 300°C)	4.9 X 10⁻⁶/°F	8.8 X 10⁻⁶/°C	8.8 X 10⁻⁶/°K	E 228
Maximum Service Temperature	+900°F	+482°C	755°K	
Modulus of Elasticity, Approx.	1.4 x 10⁶ psi	9,400 kg/cm²	965 MPa	C 623
Shear Strength	No reliable recognized test method for determination of the shear strength for cellular glass exists at this time. Where shear strength is a design criterion PCC should be contacted for recommendations.			
Thermal Conductivity	Btu-in/hr-ft²-°F	kcal/m-h-°C	W/mK	C 177, C 518
	0.32 @ 75°F	0.037 @ 0°C	0.043 @ 0°C	
	0.31 @ 50°F	0.038 @ 10°C	0.044 @ 10°C	
Specific Heat	0.20 Btu/lb-°F	0.20 kcal/kg-°C	0.84 kJ/kg-°K	
Thermal Diffusivity	0.017 ft²/hr	0.0043 cm²/sec	4.3 x 10⁻⁷m²/sec	

NOTE: Properties at 75°F unless otherwise specified. Properties may vary with temperature.

32 rev 1 *3 of 5

PITTWRAP® Jacketing

Product Data Sheet

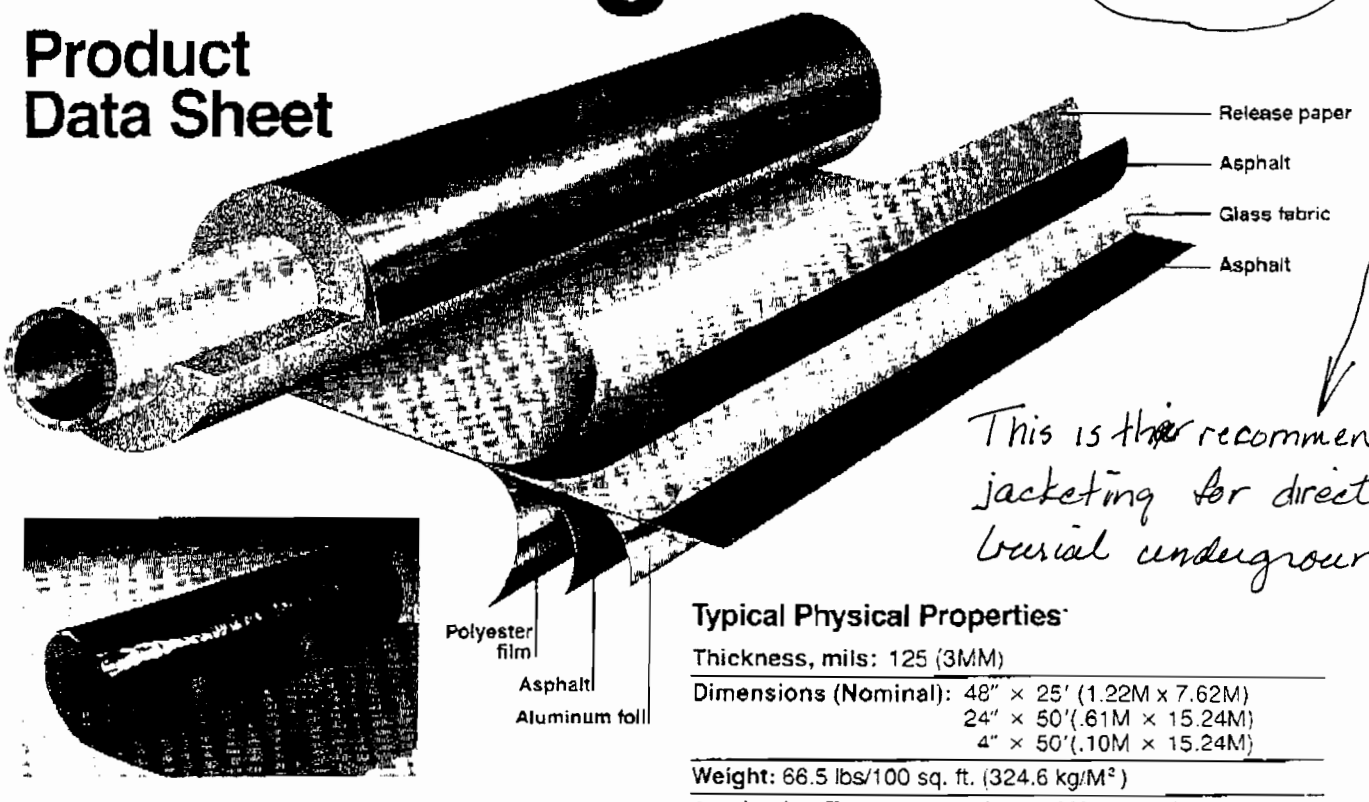

This is their recommended jacketing for direct burial underground

PITTWRAP® jacketing is a heat sealable, multi-ply laminate which protects and acts as a finish for FOAMGLAS® insulation or other non-combustible thermal insulation materials. PITTWRAP® jacketing is used on underground systems and equipment over insulations with outer surface temperatures below 200°F (94°C).

PITTWRAP® jacketing consists of a layer of special asphalt; a glass fabric reinforcement; a second layer of asphalt; an aluminum foil layer; a third layer of asphalt; and a polyester outer film. A release paper prevents sticking in the roll before use.

Application

PITTWRAP® jacketing may be applied to insulation in the shop or after the insulation is applied in the field.

PITTWRAP® jacketing is applied around FOAMGLAS® insulation in a cigarette type wrap style with butt strips over the end joints (see back page).

All underground insulation systems must be designed with proper engineering details to control expansion/contraction, anchoring, etc. A qualified engineer should be consulted for design.

Material Preparation

Store PITTWRAP® jacketing in cool area out of direct sun in hot weather. In cold weather, store in warm area prior to use to facilitate application.

Typical Physical Properties*

Thickness, mils:	125 (3MM)
Dimensions (Nominal):	48" × 25' (1.22M x 7.62M) 24" × 50'(.61M × 15.24M) 4" × 50'(.10M × 15.24M)
Weight:	66.5 lbs/100 sq. ft. (324.6 kg/M²)
Application Temperature:	Above 20°F (−6.7°C)
Surface Temperature at Jacket Location:	20°F to 200°F (−6.7°C to 94°C)
Fire Resistance:	Combustible
Soil Acids Resistance:	Good
Water Vapor Transmission, Perms:	Below precision limits of ASTM E 96 test methods.
Color:	Black

*Typical properties at date of printing subject to change

Limitations

The following installation limitations apply to PITTWRAP® jacketing:

- Do not use over combustible insulations or install where open flames are not permitted.
- Do not use above ground without a metal jacket.
- Do not use in areas where jacketing will be exposed to temperatures in excess of 200°F (94°C).
- Do not use where jacketing will be exposed to solvents that will dissolve asphalt.

The information herein is accurate and reliable to the best of our knowledge. Pittsburgh Corning has no control over installation workmanship, accessory materials, or conditions of applications and therefore cannot be responsible therefor. No representation or expressed or implied warranty, *either as to merchantibility or fitness*, is made as to the performance or results of an installation containing Pittsburgh Corning's products which extends beyond the description on the face hereof.

32 lw/ 4.65

Submittal 32 Revision 1

Additional information on Foamglas Insulation.

For 8" DIP Class 51

O.D. of DIP	9.05	inches	
O.D. of Foamglas	14	inches	
Thickness each side	2.475	inches	(14-9)/2
R-Value per inch	3.03	per inch	
Total R-Value	7.49925		(3.03x2.475)

For 12" DIP Class 51

O.D. of DIP	13.2	inches	
O.D. of Foamglas	18	inches	
Thickness each side	2.4	inches	(18-13.2)/2
R-Value per inch	3.03	per inch	
Total R-Value	7.272		(3.03x2.4)

Milherst Construction, Inc.
P.O. Box 631
Getzville, New York 14068

Phone (716) 688-9098
Fax (716) 688-9562

Submittal No.33

Lehigh Valley RR Derailment Site

Owner NYS Department of Environmental Conservation
Bureau of Construction Services, 12th Floor
625 Broadway
Albany, NY 12233-7013

Contractor Milherst Construction, Inc

Date January 17, 2002

Item: Flowable Fill - K-Crete - United Materials & Darafill

Specification:

Section: Boring -02670
Page No.: 02670-4
Para. No.: 3.03 H
Drawing No.: Sheet G-30
Location: Casing Pipe

Milherst Construction, Inc. certifies that all quantities, dimensions, specified performance criteria, installation requirements, materials, catalog numbers, and similar data with respect thereto have been reviewed or that each Shop Drawing or sample has been coordinated with other Shop Drawings and samples and with the requirements of the Work and Contract Documents.

By: Charles F. Kubiniec

Charles F. Kubiniec
Project Manager

☒ **APPROVED**

☐ **APPROVED AS CORRECTED**
(Resubmit final copy for file)

☐ **REVISE AND RESUBMIT BEFORE PROCEEDING**

☐ **NOT APPROVED**

Review only for conformance with the design concept of the project and with information given in the Contract Documents. The Contractor is responsible for: verifying that dimensions are confirmed and correlated at the job site; obtaining information that pertains to the fabrication processes or to techniques of construction, and: coordinating the work of all subcontractors.
STEARNS & WHELER, LLC Engineers and Scientists

By TJF Date 2/25/02

Concrete

PRODUCT INFORMATION

United Materials
50-100 PSI Non-Pozzolan
Flowable Fill

SUBMITTAL
MILHEIST CONSTRUCTION, INC.
Job: Lehigh Valley RR Derailment Site
Item: Type 5 Select Fill
Descr: K-Crete Flowable Fill 50-100 PSI
Reviewed By: CFR
Date: 2-15-02

33

DaraFill®

Controlled Low Strength Material Performance Additive

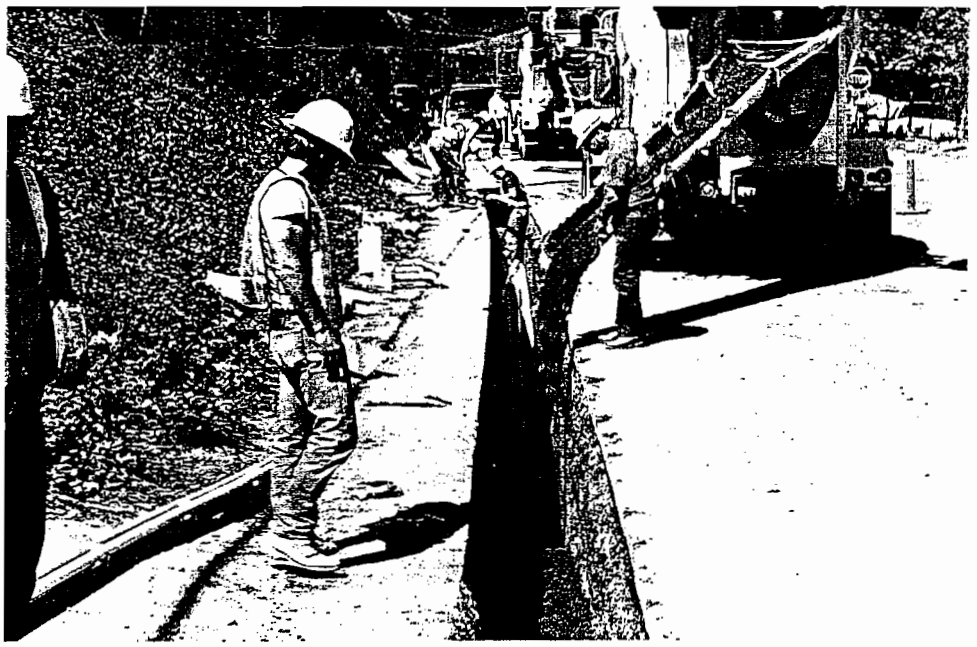

Description

02670-4
3.03 H

DaraFill® CLSM Performance Additive produces engineered Controlled Low Strength Material (CLSM)* that is highly flowable, volume stable and excavatable in the future. DaraFill is a viscous solution of organic compounds used in cementitious backfill mixtures. By developing a stable-air matrix in the CLSM mixture, DaraFill improves flowability and reduces the required amount of mix water up to 50%, compared to a water-based CLSM. DaraFill is packaged in an inert wax capsule that releases its contents during the mixing action in large volume mixers. The capsule shatters upon impact inside the ready mix truck and disintegrates during mixing. DaraFill capsules are available in two sizes, 90 mL and 360 mL (3 oz and 12 oz).

Uses

The use of DaraFill CLSM Performance Additive produces a low water content CLSM that is primarily used to improve flowability, lower densities, eliminate segregation and settlement, and control strength development in applications where future excavation is required. DaraFill is designed to be used with cement, and pozzolans such as ASTM grade fly ash and ground blast furnace slag. The addition of DaraFill is a cost-effective alternative to a water-based CLSM mixture, and CLSM is a cost-effective alternative to soil backfill.

Performance

The addition of DaraFill CLSM Performance Additive generates stable air contents of 15 to 30% and significantly reduces mix water requirements by as much as 50% when compared to water-based CLSM. When used as recommended, DaraFill enhances plastic and hardened properties of CLSM accordingly:

- Provides a CLSM which is highly flowable with no segregation.
- Controls strength development for future excavatability, usually in the range of 0.35 to 1.40 MPa (50 to 200 psi) depending on the application requirements.
- Increases yield of materials up to 30%.

GRACE
Construction Products

- Provides densities in the range of 1440 to 1920 kg/m^3 (90 to 120 lb/ft^3).
- Aids pumpability and minimizes segregation in pump between loads. Pre-job testing with actual equipment and intended configuration is strongly recommended.
- Reduces buoyancy problems in CLSM around embedded pipes and tanks when compared to water-based CLSM.

DaraFill CLSM Performance Additive and CLSM Applications

DaraFill CLSM Performance Additive is designed for CLSM mixtures and is not recommended for use in conventional concrete. DaraFill CLSM offers the following benefits:

- Safe, efficient, non-corrosive fill material for trenches, tanks and pipes.
- Self-leveling and high lateral flow fills for trenches, undercuts and voids.
- Cost-effective in comparison to compacted soil by increasing efficiency of labor and equipment.
- Flexible, mix designs to suit requirements.
- Minimizes settlement in comparison to compacted-soil backfill.

Storage, Addition Rate, Dispensing and Mix Designs

DaraFill CLSM Performance Additive capsules have a storage tolerance in the temperature range of 0°C to 55°C (32°F to 130°F). Store DaraFill above freezing, away from heat sources and out of direct sunlight.

Addition rates are typically one 90 mL (3 oz) capsule to dose 0.75 m^3 (1 yd^3) of CLSM and one 360 mL (12 oz) capsule to dose 3 m^3 (4 yd^3) of CLSM.

The DaraFill CLSM Performance Additive capsules are added in their entirety to the CLSM load. For ready mix truck batching, best results are achieved by tossing the capsules against the bottom of the truck hopper to ensure breakage and then washing down. DaraFill should be added directly into mixers after the CLSM load is batched. For optimization of freight volumes, add DaraFill at the job site. CLSM with DaraFill reaches optimum consistency when the mixture reaches a creamy, flowing appearance. For central mix operations, add DaraFill capsules into the central mixer and not into trucks to ease discharge from the central mixer.

Mix design information may be obtained from a Grace Construction Products representative. If water-based CLSM is now being used, a mix design adjustment will be required in order to use DaraFill CLSM Performance Additive.

Specification

Material for backfill operations shall be cementitious Controlled Low Strength Material mixtures as supplied by concrete producer and contain DaraFill CLSM Performance Additive, as manufactured by Grace Construction Products, Cambridge, MA. Mixture ingredients and proportions shall be submitted for approval. DaraFill CLSM

Performance Additive shall be added by the concrete producer personnel as per manufacturer's recommendations.

* CLSM may be referred to as "Flowable Fill", "Controlled Density Fill" or "Cement Stabilized Sand" in different geographical areas.

W.R. Grace & Co.-Conn. 62 Whittemore Avenue Cambridge, MA 02140

DaraFill is a registered trademark of W.R. Grace & Co.-Conn.

We hope the information here will be helpful. It is based on data and knowledge considered to be true and accurate and is offered for the users' consideration, investigation and verification, but we do not warrant the results to be obtained. Please read all statements, recommendations or suggestions in conjunction with our conditions of sale, which apply to all goods supplied by us. No statement, recommendation or suggestion is intended for any use which would infringe any patent or copyright. W. R. Grace & Co.-Conn., 62 Whittemore Avenue, Cambridge, MA 02140. In Canada, W. R. Grace & Co. Canada, Ltd. 294 Clements Road, West, Ajax, Ontario, Canada L1S 3C6.

This product may be covered by patents or patents pending. Copyright 1997. W.R. Grace & Co.-Conn. DF-1F Printed in U.S.A. 4/97 FA/GPS/1M

GRACE
Construction Products

Milherst Construction, Inc.
P.O. Box 631
Getzville, New York 14068

Phone (716) 688-9098
Fax (716) 688-9562

Submittal No. 34

Lehigh Valley RR Derailment Site

Owner NYS Department of Environmental Conservation
Bureau of Construction Services, 12th Floor
625 Broadway
Albany, NY 12233-7013

Contractor Milherst Construction, Inc
Date January 17, 2002

Item: Pre-Cast Concrete Vaults

Specification:
Section: 03482
Page No.: 03482-1 to 7
Para. No.:
Drawing No.: Sheet G-28
Location: 3 Meter Vaults & 2 Reducing Valve Vaults

Attached:
1 Meter Vault A with details typical for all vaults
2 Meter Vault B
3 Meter Vault C
4 Valve Vault A
5 Valve Vault B

Milherst Construction, Inc. certifies that all quantities, dimensions, specified performance criteria, installation requirements, materials, catalog numbers, and similar data with respect thereto have been reviewed or that each Shop Drawing or sample has been coordinated with other Shop Drawings and samples and with the requirements of the Work and Contract Documents.

By: Charles F. Kubiniec
Charles F. Kubiniec
Project Manager

LADDER-UP NOT REVIEWED

☒ APPROVED
☐ APPROVED AS CORRECTED
(Resubmit final copy for file)
☐ REVISE AND RESUBMIT BEFORE PROCEEDING
☐ [illegible]
[illegible] with the design concept [illegible] given in the Contract [illegible] responsible for: verifying [illegible] confirmed and correlated at the job [illegible] information that pertains to the fabrication processes or to techniques of construction, and: coordinating the work of all subcontractors.
STEARNS & WHELER, LLC Engineers and Scientists

M. Lundrigan 3/18/02

KISTNER CONCRETE PRODUCTS INC.
8713 READ ROAD
E. PEMBROKE, N.Y.
14056
(716) 894-2267

PRODUCT DESIGNATION

RECTANGULAR STRUCTURE DETAIL

DWG. NO.
LS-RVPD ©
2-20-99

Pipe - 12" D.I.
O.D. = 13.2"
INV. ELEV. = ?
℄ ELEV. = ?
TYP. OF 2
SLEEVE = WS-16-37-5-6
14-LS325

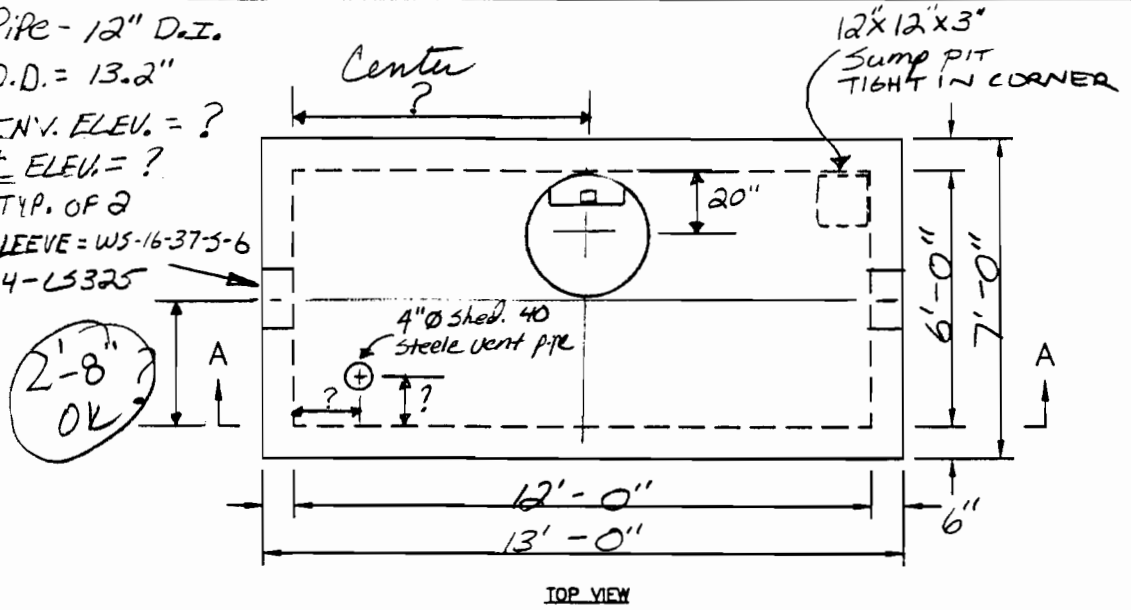

TOP VIEW

4"Ø Steel Vent Pipe
O.D. = 4½"
Sleeve = WS-6-28-5-8
10-LS-300

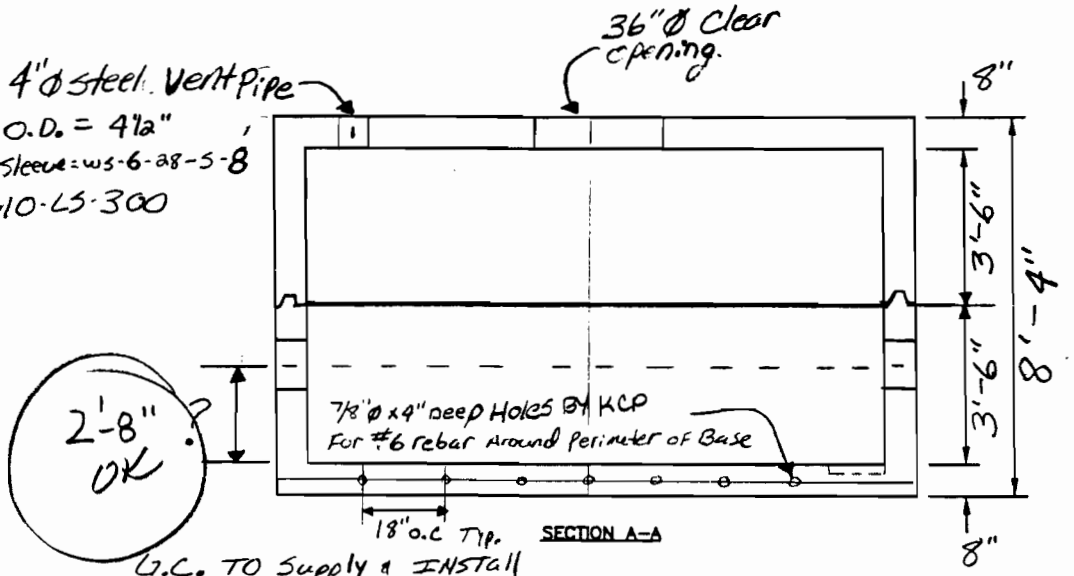

SECTION A-A

G.C. TO Supply & INSTALL
Rebar Dowels & pour Flange IN Field.

ARE THERE EXPOSED AREAS? ☐ YES ☐ NO

PIPE TO MANHOLE CONNECTIONS — HOLE PIPE TO FIT — PIPE SIZE: — C1 ☐

PIPE TO MANHOLE CONNECTIONS — WATERTIGHT BOOT — PIPE SIZE: — C2 ☐

LINK SEAL BY G.C. — SLEEVE CAST IN G.C. TO SUPPLY — PIPE SIZE: — C3 ☒

☐ POLYPROPYLENE STEPS

LADDER – HARDWARE AND INSTALLATION BY G.C.
- ☒ ALUMINUM – POLYPROP — LENGTH 7'-0"
- ☐ GALVANIZED — LENGTH
- ☐ FIBERGLASS — LENGTH
- ☐ NONE REQ'D

JOINT DETAIL*
- ☐ ST-TJD-BW2
- ☒ ST-TJD

*MFG'S RECOMMENDATION

BITUMINOUS COATINGS
- ☐ INTERIOR
- ☐ EXTERIOR
- ☐ NONE
- ☒ BY G.C.

SUMP
- ☒ RECESS — SIZE 12"SQ x 3" DP.
- ☐ PIT — SIZE
- ☐ HOLE — SIZE
- ☐ NONE REQ'D

PRODUCT: 6x12 Meter Vault - A

WEIGHTS:

☐ A: SPECIFICATIONS:

CONCRETE:	4,000 P.S.I. @ 28 DAYS.
ENTRAINED AIR:	5% – 9%.
STEEL:	A.S.T.M. A496-A615 GRADE 60-60 KSI.
DESIGN LOADING:	A-0.3/300PSF/WALKWAYS. FLOTATION FORCES NOT ACCOUNTED FOR.

☒ B: SPECIFICATIONS:

CONCRETE:	4,000 P.S.I. @ 28 DAYS.
ENTRAINED AIR:	5% – 9%.
STEEL:	A.S.T.M. A496-A615 GRADE 60-60 KSI.
DESIGN LOADING:	A.A.S.H.T.O. HS-20-44 WITH 30% IMPACT AND EQUIVALENT SOIL PRESSURE OF 130 (PCF). FLOTATION FORCES NOT ACCOUNTED FOR.

PROJECT: LEHIGH VALLEY WATER MAIN
LOCATION: LEROY, NY
ENGINEER: STEARNS & WHEELER
CO: MILHERST CONSTRUCTION INC. ID/Status 1342
OFC.C... JIM JR. / CHIP Ph: 716-688-9098
FIELD CONT: Fax 716-688-9562
JOB PHONE: JOB FAX: [0] - -
JOB MOBILE: JOB PGR:
SALESMAN 06-CJC P.O. #:

WATERTIGHT JOINT INSTALLATION PROCEDURE

☒ TYPE I

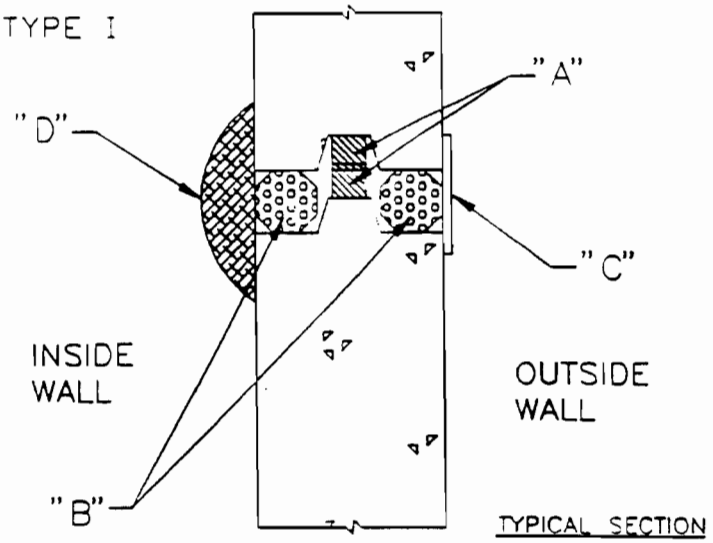

TYPICAL SECTION

☐ TYPE II

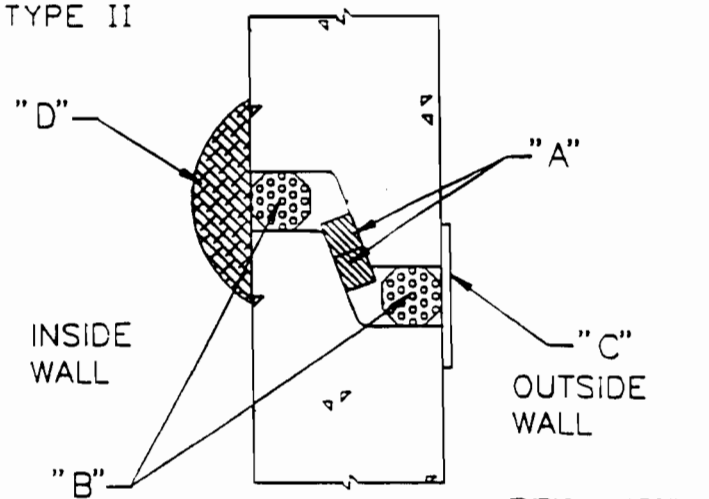

TYPICAL SECTION

☐ TYPE III

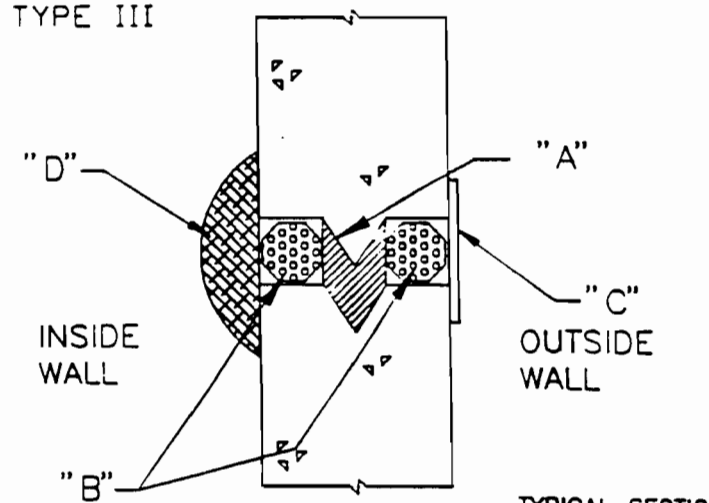

TYPICAL SECTION

GENERAL NOTES:

"A" – JOINT SEALANT BY K.C.P.
"B" – WATERPLUG BY G.C.
"C" – 6"(152.4mm.) BUTYL WRAP WITH BACKING PRIMED FOR INSTALLATION BY K.C.P.
"D" – TAR BY G.C.

"A", "B", "C" & "D" AVAILABLE THROUGH KISTNER CONCRETE. PURCHASED & INSTALLED BY CONTRACTOR.

JOINT DETAILS FOR WATERTIGHT INSTALLATION.

NOTE: NON–POTABLE INSTALLATIONS ONLY.

ABOVE INFORMATION IS SUPPLIED FOR CONTRACTOR KNOWLEDGE. CONTRACTOR IS RESPONSIBLE FOR PROPER APPLICATION AND ULTIMATE WATERTIGHT INSTALLATION OF STRUCTURE.

"A" JOINT SEALANT
"BUTYL RUBBER"
MEETS FEDERAL SPECIFICATION
#SS–S–00210 (210–A)
AASHTO M–198
SERVICE TEMP: –65° TO +200°F

PROCEDURE:

1) INSTALL STRUCTURE BOTTOM SECTION.
2) LOCATE 1"(25.4mm.) SQ. BUTYL JOINT SEALANT "A" PER DETAIL.
3) INSTALL NEXT STRUCTURE SECTION.
4) WATERPLUG "B" INTERIOR & EXTERIOR, ALL GAPS.
6) APPLY BUTYL WRAP "C"

☐ TYPE IV

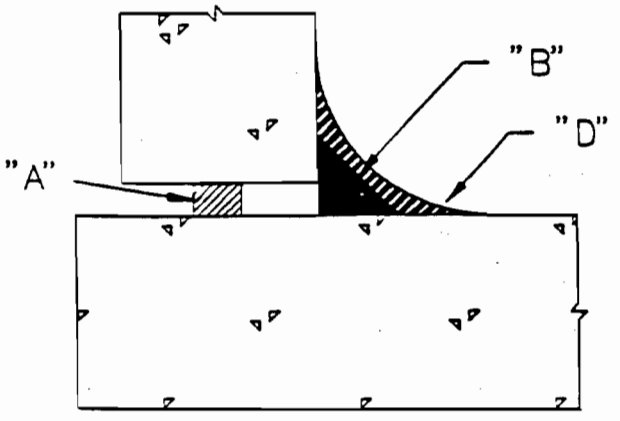

TYPICAL SECTION

© 1993 Kistner Concrete Products, Inc.
SPECIFICATIONS ARE SUBJECT TO CHANGE WITHOUT NOTICE.

Effective April, 1993
MPL–JOINTINS, PRINTED IN U.S.A.

KISTNER CONCRETE PRODUCTS INC.
8713 READ ROAD
E. PEMBROKE, N.Y.
14056
(716) 894-2267

PRODUCT DESIGNATION

LINK SEAL ASSEMBLY

DWG. NO.
MH-LNKSLASS ©
2-24-95

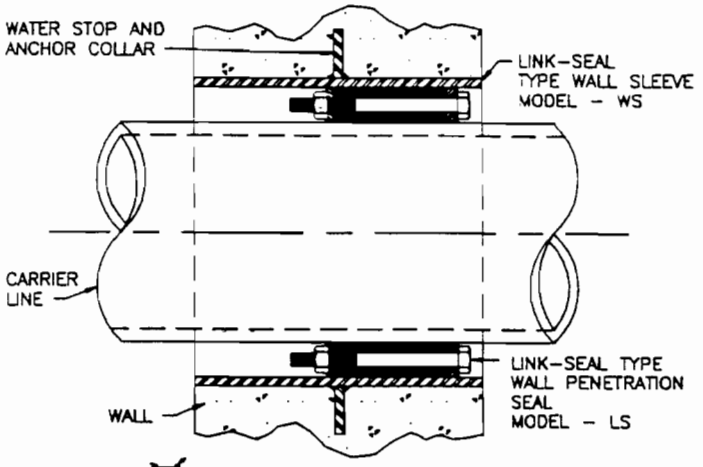

☒ STEEL WALL SLEEVE

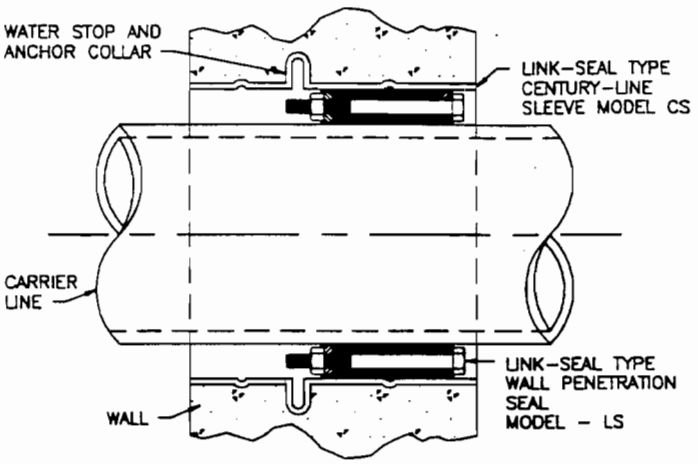

☐ THERMOPLASTIC WALL SLEEVE

WS-[14]-[25]-[S]-[12]-[LS-425-C]

- 14 — Sleeve pipe OD (nominal size in inches)
- 25 — Sleeve wall thickness (in inches)
- S — Steel. (Other materials available upon request. contact factory)
- 12 — Length in inches (Wall structure thickness)
- LS-425-C — Link-Seal model number and service designation (if complete wall sleeve and seal assembly desired)

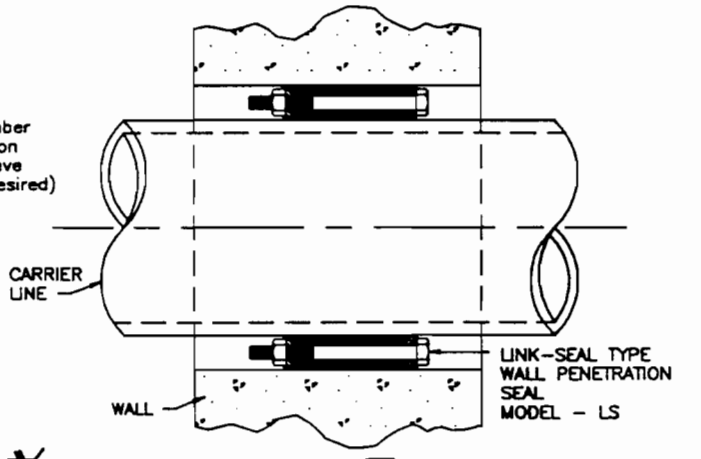

☒ CAST OPENING ☐ CORED OPENING

(C) – STANDARD SERVICE CARBON BOLTS INSULATING TYPE

M – STANDARD SERVICE CARBON BOLTS NON-INSULATING TYPE

S – CORROSIVE SERVICE STAINLESS STEEL BOLTS

O – OIL RESISTANT

T – EXTREME HIGH OR LOW TEMPERATURE

FD-FS – FIRE RATED SERVICE

PROJECT: LEHIGH VALLEY WATER MAIN
LOCATION: LEROY, NY
ENGINEER: STEARNS & WHEELER
CO: MILHERST CONSTRUCTION INC. **ID/Status** 1342
OFC.C... JIM JR. / CHIP **Ph:** 716-688-9098
FIELD CONT: **Fax** 716-688-9562
JOB PHONE: **JOB FAX:** [0] - -
JOB MOBILE: **JOB PGR:**
SALESMAN 06-CJC **P.O. #:**

QTY	PIPE SIZE & TYPE	PIPE O.D.	SLEEVES		SMOOTH OPENING		LINK SEAL PER OPENING	STRUCTURE
			STEEL	THERMOPLASTIC	CAST	CORED		
2	12" DI	13.2"	WS-16-37-S-6				14-LS325	MV-A
1	4" steel	9.5"	WS-6-28-S-8				10-LS300	MV-A

The Lane Polypropylene Vault Ladder

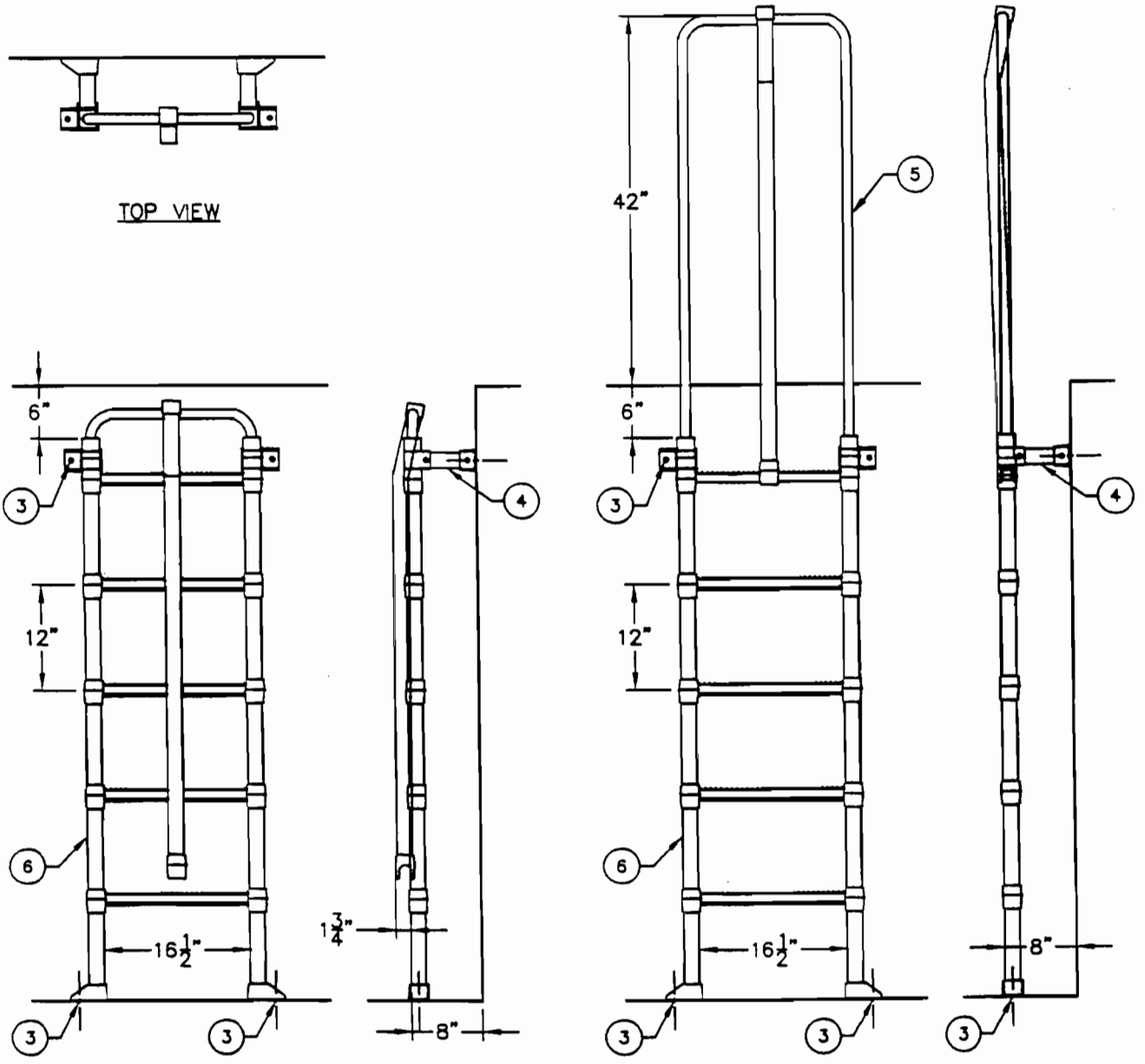

HANDRAIL IN RETRACTED POSITION

HANDRAIL IN EXTENDED POSITION

NOTES:

1. LADDERS AVAILABLE IN 3 RUNG THROUGH 12 RUNG.
2. POLYPROPYLENE CONFORMS TO ASTM D-4101. LADDERS MEET ALL ASTM C-497 LOAD REQUIREMENTS.
3. FASTEN LADDER TO FLOOR AND WALL WITH 1/2"x 3-3/4" ANCHORS. ANCHORS TO BE INSTALLED PER MANUFACTURERS INSTRUCTIONS.
4. ATTACH ADJUSTABLE MOUNTING BRACKET WITH 1/4" S.S. FASTENERS.
5. ALUMINUM AND STEEL REINFORCED COPOLYMER POLYPROPYLENE PULL-UP HANDRAIL.
6. ALUMINUM AND STEEL REINFORCED COPOLYMER POLYPROPYLENE LADDER.

CAD Drawings available on request.

June 27, 1999

Project No. 689-960303
Report No. 689-960303-001

Mr. Kelly Robertson
Lane International Corporation
18067 SW Lower Boones Ferry Road
Tualatin, Oregon 97062

Dear Mr. Robertson

Re: Ladder Testing

This report presents the results of testing conducted on a vault ladder manufactured by Lane International Corporation. Testing was coordinated by Lane International Corporation under the supervision of Professional Service Industries, Inc. (PSI). Testing was performed in accordance with OSHA Specifications 1910.26 and 1910.27 at the Lane International Corporation facility located in Tualatin, Oregon and observed by a representative of PSI.

Testing finds the vault ladder to be in compliance with the sections of Oregon Occupational Safety and Health Code Specifications 1910.26 and 1910.27 presented below.

OSHA 1910.26 and 1910.27 are presented below. Actual measured values and/or observed features of the inspected ladder is in italics.

Specification 1910.26

(a) Requirements.

(1) General. The design shall be such as to produce a ladder without structural defects or accident hazards such as sharp edges, burrs, etc. The metal shall be of sufficient strength to meet the test requirements, and shall be protected against corrosion unless inherintly corrosion-resistant. *The ladder is free from structural defects or accident hazards. The metal is of sufficient strength to meet the test requirements. The entire ladder is coated with copolymer polpropylene plastic to protect it against corrosion.*

(iii) The spacing of the rungs or steps shall be on 12 inch centers. *The rungs are spaced at 12" intervals, measured from center to center.*

(v) Rungs and steps shall be corrugated, knurled, dimpled, coated with skid-resistant material, or otherwise treated to minimize the possibilty of slipping. *The rungs are dimpled and coated with copolymer polypropylene plastic to minimize the possibility of slipping.*

Specification 1910.27

(a) Design requirements.

(1) Design considerations. All ladders, appurtenances, and fastenings shall be designed to meet the following requirements:

(i) The minimum design live load shall be a single concentrated load of 200 pounds. *A single concentrated live load consisting of round steel pieces 16" in length and weighing 213 pounds is used.*

(ii) The number and position of additional concentrated live load units of 200 pounds each as determined from anticipated usage of the ladder shall be considered in the design. *Additional concentrated live load units are not used.*

(iii) The live loads imposed by persons occupying the ladder shall be considered to be concentrated at such points as will cause the maximum stress in the structural member being considered. *The live load is placed on one rung, hanging from two points, in order to cause the maximum stress in the structural member.*

(b) Specific Features.

(1) Rungs and cleats.

(i) All rungs shall have a minimum diameter of ¾ inch for metal ladders and a minimum diameter of 1 1/8 inches for wood ladders. *The diameter of each rung is 1 3/8 inches.*

(ii) The distance between rungs, cleats, and steps shall not exceed 12 inches and shall be uniform throughout the length of the ladder. *The distance between rungs is 12 inches and is uniform throughout the entire length of the ladder.*

(iii) The minimum clear length of rungs or cleats shall be 16 inches. *The clear length of the rungs is 16 inches.*

(iv) Rungs, cleats, and steps shall be free of splinters, sharp edges, burrs, and projections which may be a hazard. *The rungs are free of splinters, sharp edges, burrs, and projections which may be a hazard.*

(2) Side Rails. Side rails which might be used as a climbing aid shall be of such cross sections as to afford adequate gripping surface without sharp edges, splinters, or burrs. *The side rails are coated with copolymer polpropylene plastic and provide adequate gripping surface without sharp edges, splinters, or burrs.*

(3) Fastenings. Fastenings shall be an integral part of the fixed ladder design. *The fastenings are an integral part of the ladder design.*

(c) Clearance.

(4) **Clearance in back of ladder.** The distance from the centerline of rungs, cleats, or steps to the nearest permanent object in back of the ladder shall be not less than 7 inches, except that when unavoidable obstructions are encountered. *The distance from the centerline of the rungs to the vertical wall in back of the ladder is 7 inches when the ladder is at a 90° angle on the horizontal.*

(d) Special Requirements.

(3) **Ladder extensions.** The side rails of through or side-step ladder extensions shall extend 3½ feet above the parapets and landings. *The side rails of the through ladder extensions extend 4½ feet above parapets and landings.*

(e) Pitch.

(1) **Preferred pitch.** The preferred pitch of fixed ladders shall be considered to come in the range of 75° and 90° with the horizontal. *The concentrated live load testing is conducted at 75° and 90° on the horizontal.*

Results

The vault ladder is in compliance with OSHA Specifications 1910.26 and 1910.27.

If you have any questions or require further services, please call us at (800)783-6985 or (503) 289-1778.

Sincerely,

Stephen R. Sotomayor
Assistant Engineer

Andrew Drexler
Project Engineer

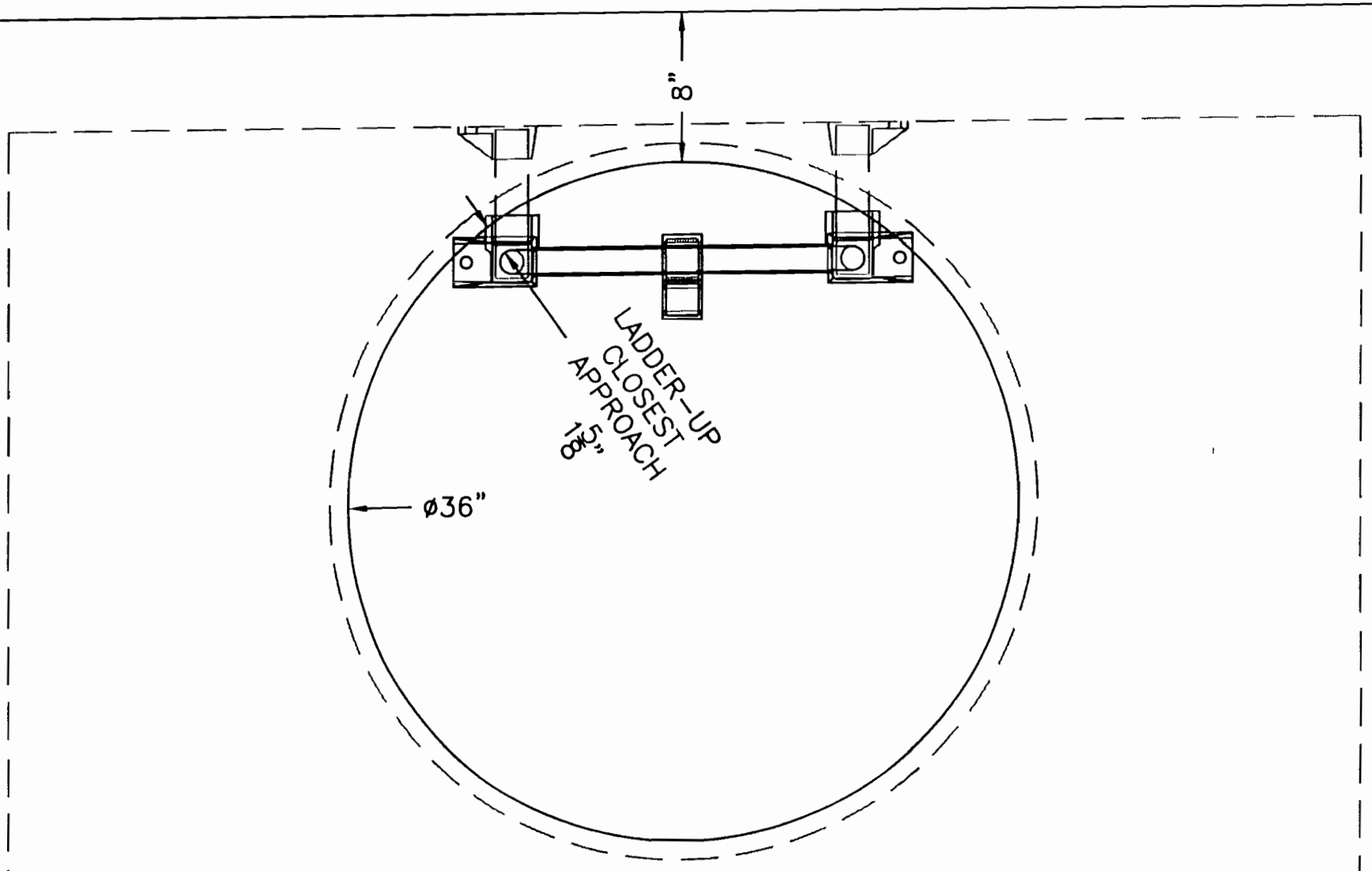

REVISIONS	
PROJECT:	"POLY-LADDER" LADDER-UP PROOF OF CLEARANCE - SRS
LOCATION:	
OWNER:	
ENGINEER:	WILLIAM M. KISTNER, JR.
CONTRACTOR:	
MANUFACTURER:	KISTNER CONCRETE PRODUCTS, INC.
PRODUCT DESIGNATION:	
SCALE: 1/8"=1'	DRAWN BY: CAE DATE: 8-31-010 DWG. NO: DRAWINGS-PARTS-POLY-LAD
DESIGNED BY: WMK	CHECK 1: CAE CHECK 2:

PROPRIETARY INFORMATION - ALL RIGHTS OF KISTNER CONCRETE PRODUCTS, INC.

KISTNER CONCRETE PRODUCTS INC.
8713 READ ROAD
E. PEMBROKE, N.Y.
14056
(716) 894-2267

PRODUCT DESIGNATION	DWG. NO.
	MISC-CIPFLPRJ ©
	8-25-93

PRECAST / CAST IN PLACE CONNECTION

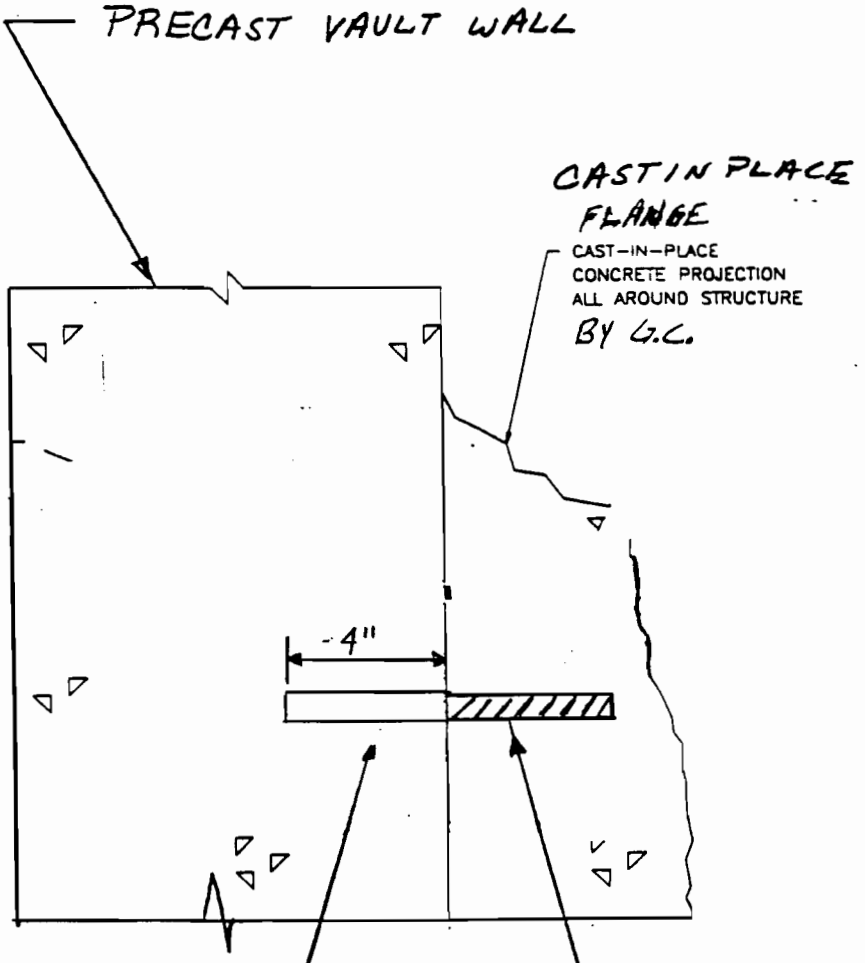

KISTNER CONCRETE PRODUCTS INC. 8713 READ ROAD E. PEMBROKE, N.Y. 14056 (716) 894-2267	PRODUCT DESIGNATION	DWG. NO.
	LINK SEAL ASSEMBLY	MH-LNKSLASS © 2-24-95

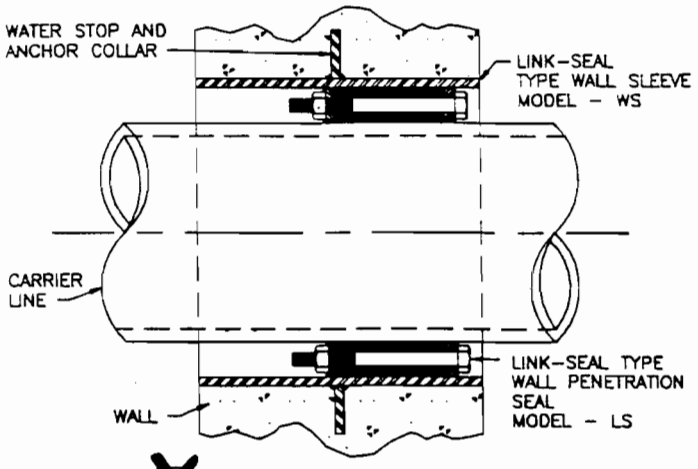

X STEEL WALL SLEEVE

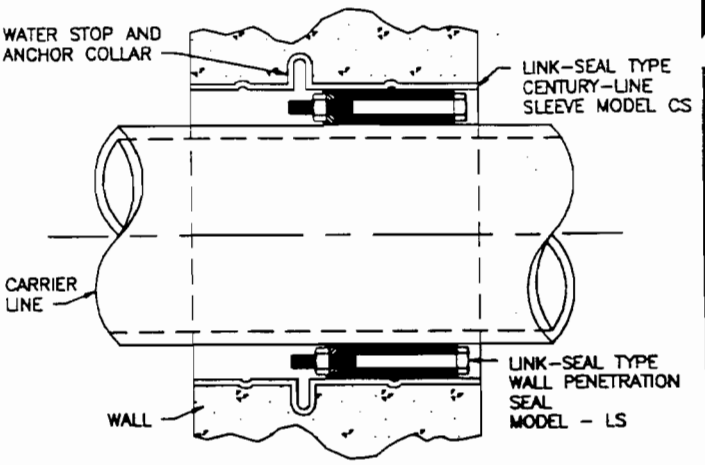

☐ THERMOPLASTIC WALL SLEEVE

WS- 14 - 25 - S - 12 - LS-425-C

- 14: Sleeve pipe OD (nominal size in inches)
- 25: Sleeve wall thickness (in inches)
- S: Steel. (Other materials available upon request. contact factory)
- 12: Length in inches (Wall structure thickness)
- LS-425-C: Link-Seal model number and service designation (if complete wall sleeve and seal assembly desired)

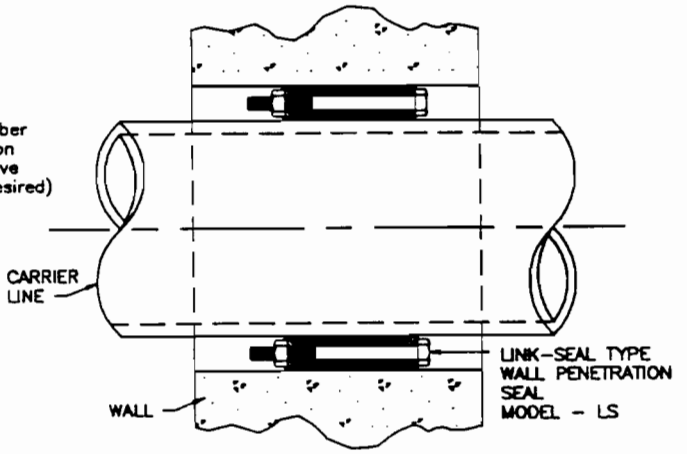

☐ CAST OPENING ☐ CORED OPENING

C - STANDARD SERVICE CARBON BOLTS INSULATING TYPE

M - STANDARD SERVICE CARBON BOLTS NON-INSULATING TYPE

S - CORROSIVE SERVICE STAINLESS STEEL BOLTS

O - OIL RESISTANT

T - EXTREME HIGH OR LOW TEMPERATURE

FD-FS - FIRE RATED SERVICE

PROJECT: LEHIGH VALLEY WATER MAIN
LOCATION: LEROY, NY
ENGINEER: STEARNS & WHEELER
CO: MILHERST CONSTRUCTION INC. **ID/Status** 1342
OFC.C... JIM JR. / CHIP **Ph:** 716-688-9098
FIELD CONT: **Fax** 716-688-9562
JOB PHONE: **JOB FAX:** [0] - -
JOB MOBILE: **JOB PGR:**
SALESMAN 06-CJC **P.O. #:**

QTY	PIPE SIZE & TYPE	PIPE O.D.	SLEEVES		SMOOTH OPENING		LINK SEAL PER OPENING	STRUCTURE
			STEEL	THERMOPLASTIC	CAST	CORED		
2	6" DIP	6.9"	WS-10-36-S-10	—	—	—	14-LS400	VV-A
1	4" STEEL	4.5"	WS-6-28-S-10	—	—	—	10-LS300	VV-A
4	8" DIP	9.05	WS-12-37-S-8	—	—	—	9-LS400	MV-B
1	4" STEEL	4.05	WS-6-28-S-12	—	—	—	10-LS300	MV-B

KISTNER CONCRETE PRODUCTS INC.
8713 READ ROAD
E. PEMBROKE, N.Y.
14056
(716) 894-2267

PRODUCT DESIGNATION

LINK SEAL ASSEMBLY

DWG. NO.
MH-LNKSLASS ©
2-24-95

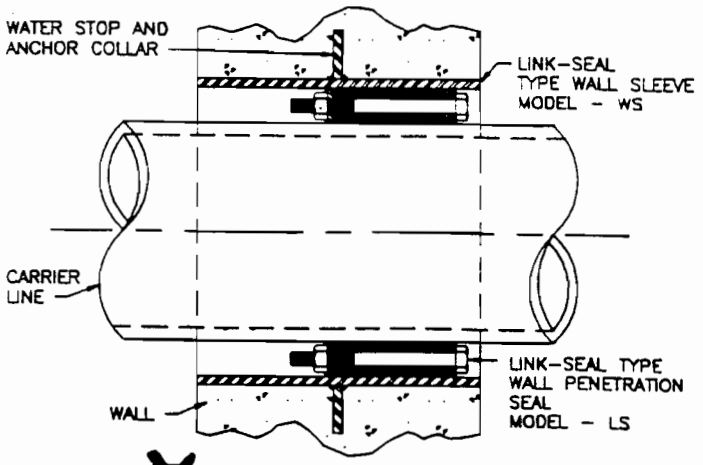

[X] STEEL WALL SLEEVE

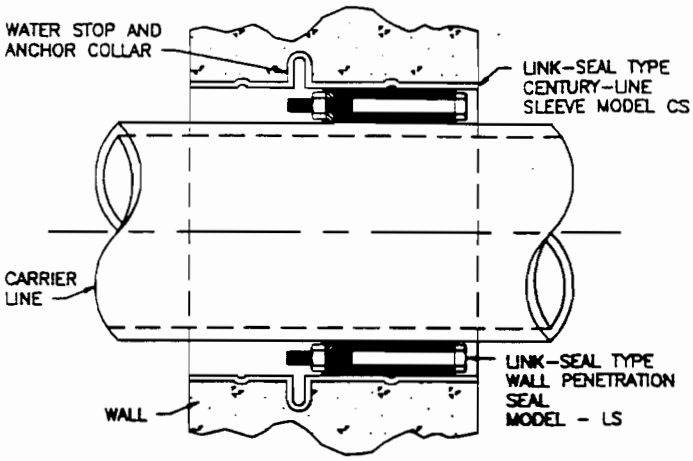

[ ] THERMOPLASTIC WALL SLEEVE

WS- 14 - 25 - S - 12 - LS-425-C

- 14: Sleeve pipe OD (nominal size in inches)
- 25: Sleeve wall thickness (in inches)
- S: Steel. (Other materials available upon request. contact factory)
- 12: Length in inches (Wall structure thickness)
- LS-425-C: Link-Seal model number and service designation (if complete wall sleeve and seal assembly desired)

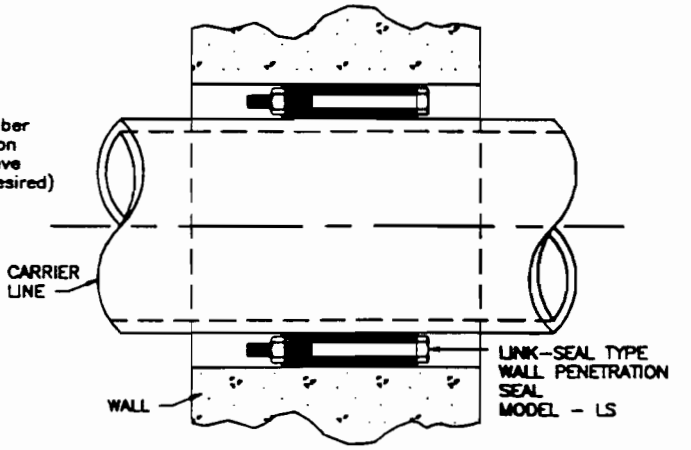

[ ] CAST OPENING [ ] CORED OPENING

(C) - STANDARD SERVICE CARBON BOLTS INSULATING TYPE

M - STANDARD SERVICE CARBON BOLTS NON-INSULATING TYPE

S - CORROSIVE SERVICE STAINLESS STEEL BOLTS

O - OIL RESISTANT

T - EXTREME HIGH OR LOW TEMPERATURE

FD-FS - FIRE RATED SERVICE

PROJECT: LEHIGH VALLEY WATER MAIN
LOCATION: LEROY, NY
ENGINEER: STEARNS & WHEELER
CO: MILHERST CONSTRUCTION INC. **ID/Status** 1342
OFC.C... JIM JR. / CHIP **Ph:** 716-688-9098
FIELD CONT: **Fax** 716-688-9562
JOB PHONE: **JOB FAX:** [0] - -
JOB MOBILE: **JOB PGR:**
SALESMAN 06-CJC **P.O. #:**

QTY	PIPE SIZE & TYPE	PIPE O.D.	SLEEVES		SMOOTH OPENING		LINK SEAL PER OPENING	STRUCTURE
			STEEL	THERMOPLASTIC	CAST	CORED		
2	8" DIP	9.05"	WS-12-37-S-10	—	—	—	9-LS400	VV-B
2	4" DIP	4.8"	WS-8-32-S-10	—	—	—	5-LS400	VV-B
1	2" PVC	2.375"	WS-4-23-S-10	—	—	—	6-LS300	VV-B
1	4" STEEL	4.5"	WS-6-28-S-10	—	—	—	10-LS300	VV-B
4	8" DIP	9.05	WS-12-37-S-8	—	—	—	9-LS400	MV-C
1	4" STEEL	4.05	WS-6-28-S-12	—	—	—	10-LS300	MV-C

Milherst Construction, Inc.
P.O. Box 631
Getzville, New York 14068

Phone (716) 688-9098
Fax (716) 688-9562

Submittal No.35

Lehigh Valley RR Derailment Site

Owner NYS Department of Environmental Conservation
Bureau of Construction Services, 12th Floor
625 Broadway
Albany, NY 12233-7013

Contractor Milherst Construction, Inc

Date January 17, 2002

Item: Ladder Up System for Valve Vaults & Meter Pits

Specification: Bilco Ladder Up with Neenah R-1741-D

Section: 03482

Page No.: 03482-5

Para. No.: 2.08 C.

Drawing No.:

Location:

Milherst Construction, Inc. certifies that all quantities, dimensions, specified performance criteria, installation requirements, materials, catalog numbers, and similar data with respect thereto have been reviewed or that each Shop Drawing or sample has been coordinated with other Shop Drawings and samples and with the requirements of the Work and Contract Documents.

By: Charles F. Kubiniec

Charles F. Kubiniec
Project Manager

☒ APPROVED

☐ APPROVED AS CORRECTED
(Resubmit final copy for file)

☐ REVISE AND RESUBMIT BEFORE PROCEEDING

☐ NOT APPROVED

Review only for conformance with the design concept of the project and with information given in the Contract Documents. The Contractor is responsible for: verifying that dimensions are confirmed and correlated at the job site; obtaining information that pertains to the fabrication processes or to techniques of construction, and: coordinating the work of all subcontractors.
STEARNS & WHELER, LLC Engineers and Scientists

By TJF Date 3/18/02

Bilco ladderUP® safety post

Specifications:

Install on fixed ladder(s) below hatch cover(s) Model 1 Bilco LadderUP safety post. Device shall be manufactured of high strength steel with telescoping tubular section that locks automatically when fully extended. Upward and downward movement shall be controlled by a stainless steel spring balancing mechanism. Finish shall be black enamel. (Important: If installation is to be in corrosive atmosphere, specify Model 2 hot dip galvanized with special alloy spring.) Unit shall be completely assembled with fasteners for securing to the ladder rungs in accordance with the manufacturer's instructions.

5-COPIES

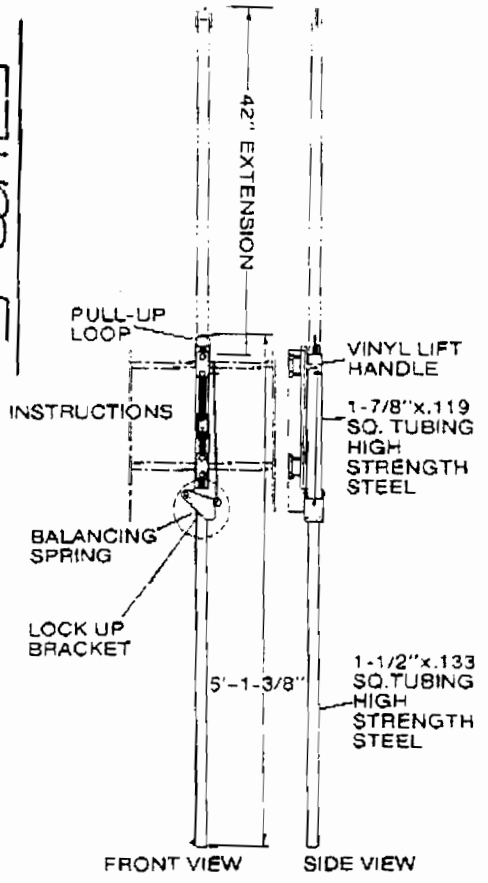

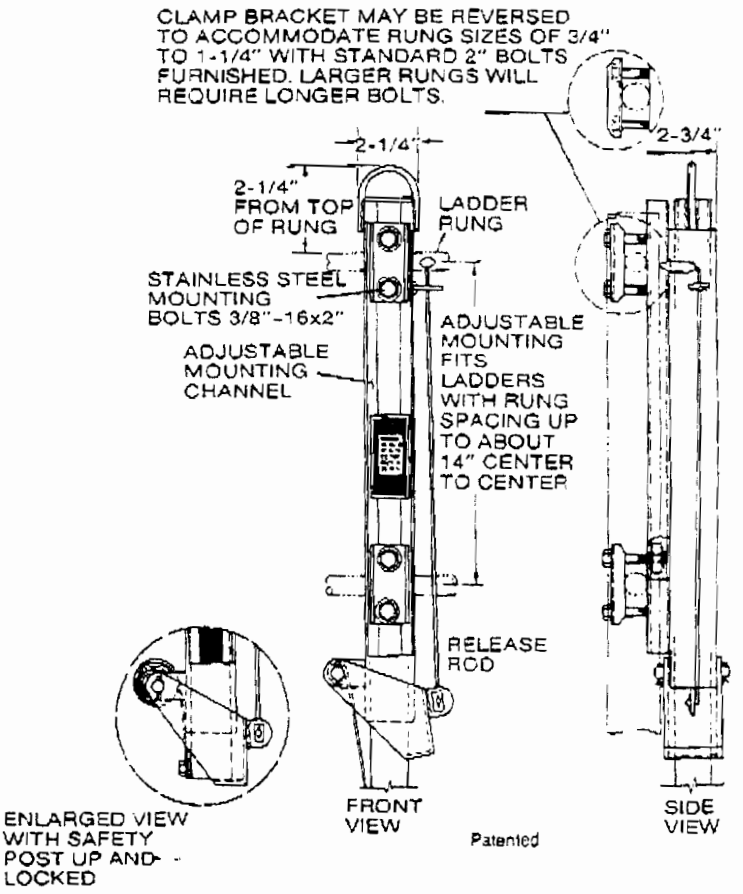

MATERIAL
CONSTRUCTION, INC.
Job: Water Distribution System
Lehigh Valley RR Derailment Site
Item 32A 32B 32C 33 34
Description: Ladder up for Pits + Vaults
Reviewed By: CFK
Date: 3/14/02

Manufactured by:...

Bilco® DOORS FOR SPECIAL SERVICES

The Bilco Company, P.O. Box 1203, New Haven, CT 06505

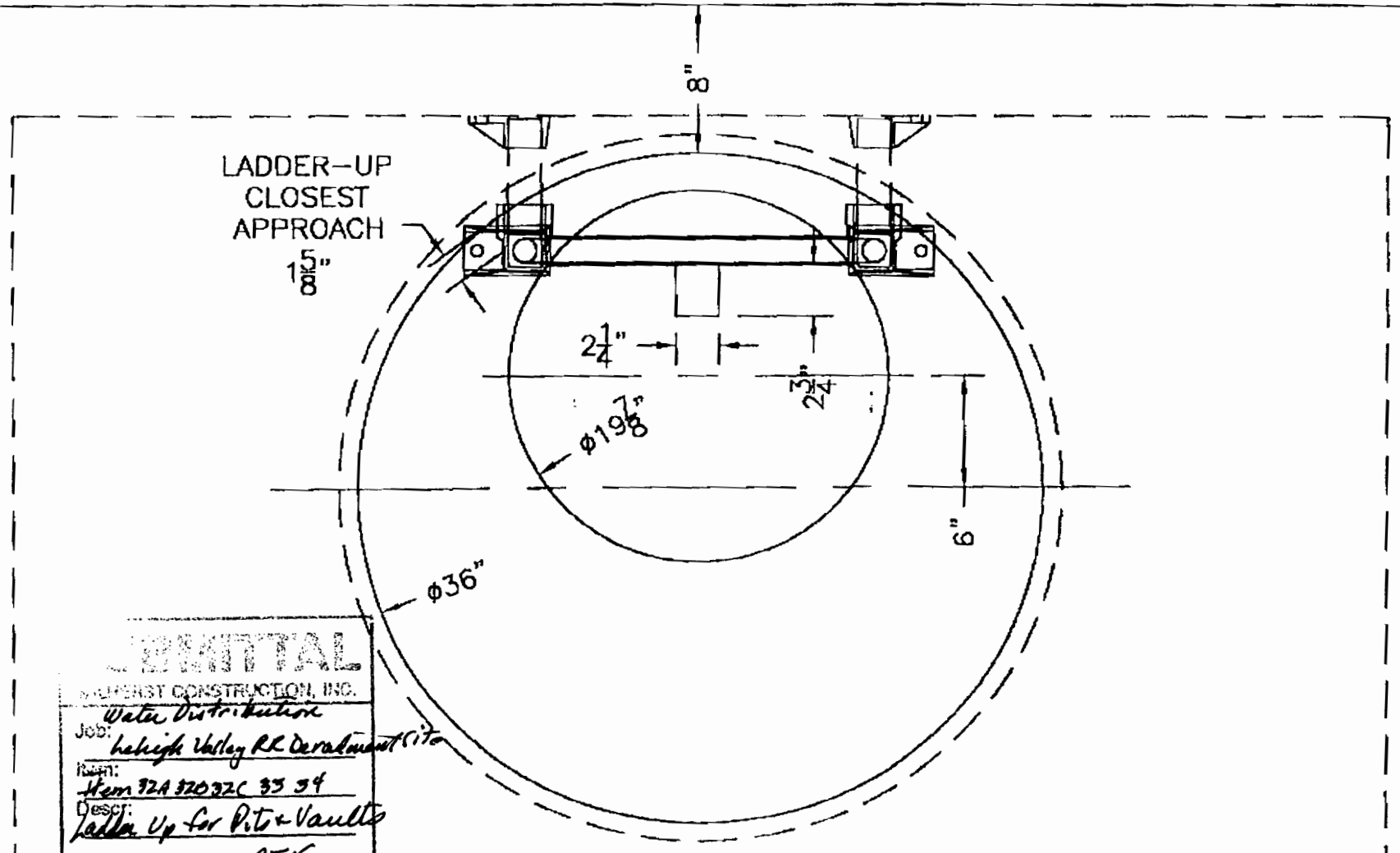

R-1741-D FRAME & COVER

SUBMITTAL
KISTNER CONSTRUCTION, INC.
Job: Water Distribution
Lehigh Valley RR Department Site
Item: Item 32A 32032C 33 34
Descr: Ladder Up for Pit + Vaults
Reviewed By: CFIC
Date: 3/14/02

REVISIONS		
		PROJECT: "POLY–LADDER" LADDER–UP PROOF OF CLEARANCE – SRS
		LOCATION:
		OWNER:
		ENGINEER: CLARENCE CONRAD – SCOTT ALAN
		CONTRACTOR:
		MANUFACTURER: KISTNER CONCRETE PRODUCTS, INC.
		PRODUCT DESIGNATION:
		SCALE: 1/0 = 1" DRAWN BY: CAE DATE: 3–13–02 DWG. NO DRAWINGS PWTS POLY LAD
		DESIGNED BY: CJC/SAC CHECK 1: CAE CHECK 2:

PROPRIETARY INFORMATION – ALL RIGHTS OF KISTNER CONCRETE PRODUCTS, INC.

Milherst Construction, Inc.
P.O. Box 631
Getzville, New York 14068

Phone (716) 688-9098
Fax (716) 688-9562

Submittal No.36

Lehigh Valley RR Derailment Site

Owner NYS Department of Environmental Conservation
Bureau of Construction Services, 12th Floor
625 Broadway
Albany, NY 12233-7013

Contractor Milherst Construction, Inc

Date April 3, 2002

Item: Restrained Flange Adapters For use in Pressure Reducing Vault A & B

Specification:

Section: 15060

Page No.: 15060-4

Para. No.: D. - 2.

Drawing No.:

Location: As required

Milherst Construction, Inc. certifies that all quantities, dimensions, specified performance criteria, installation requirements, materials, catalog numbers, and similar data with respect thereto have been reviewed or that each Shop Drawing or sample has been coordinated with other Shop Drawings and samples and with the requirements of the Work and Contract Documents.

By: Charles F. Kubiniec

Charles F. Kubiniec
Project Manager

☐ **APPROVED**

☐ **APPROVED AS CORRECTED**
(Resubmit final copy for file)

☐ **REVISE AND RESUBMIT BEFORE PROCEEDING**

☒ **NOT APPROVED**

- Not the right restrained adapter for this application

Review only for conformance with the design concept of the project and with information given in the Contract Documents. The Contractor is responsible for: verifying that dimensions are confirmed and correlated at the job site; obtaining information that pertains to the fabrication processes or to techniques of construction, and: coordinating the work of all subcontractors.
STEARNS & WHELER, LLC Engineers and Scientists

By TJF Date 4/15/02

SERIES 2100

MEGAFLANGE®

RESTRAINED FLANGE ADAPTER

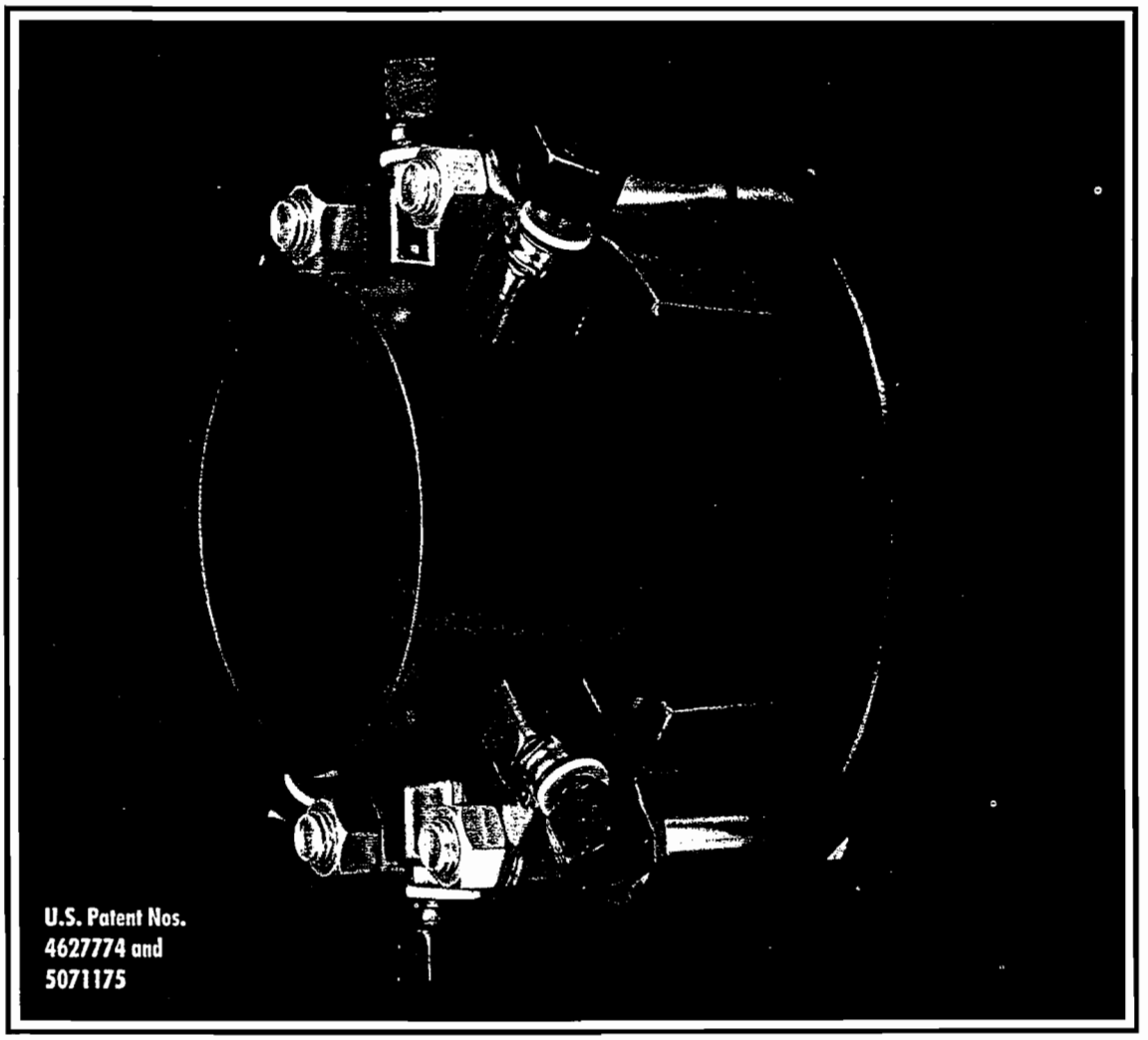

U.S. Patent Nos.
4627774 and
5071175

A VERSATILE AND CONVENIENT REPLACEMENT FOR THREADED FLANGE SPOOL PIECES

UL®

FM
APPROVED

Now Available in [illegible] Size

EBAA IRON™
EBAA IRON SALES INC.
"YOUR CONNECTION TO THE FUTURE"™

0698-10-C

MILLIERST CONSTRUCTION INC.
Submitted 4-3-02

SERIES 2100 MEGAFLANGE® RESTRAINED FLANGE ADAPTER

The MEGAFLANGE restrained flange adapter is a completely new concept in flange adapters. A cross section reveals the difference:

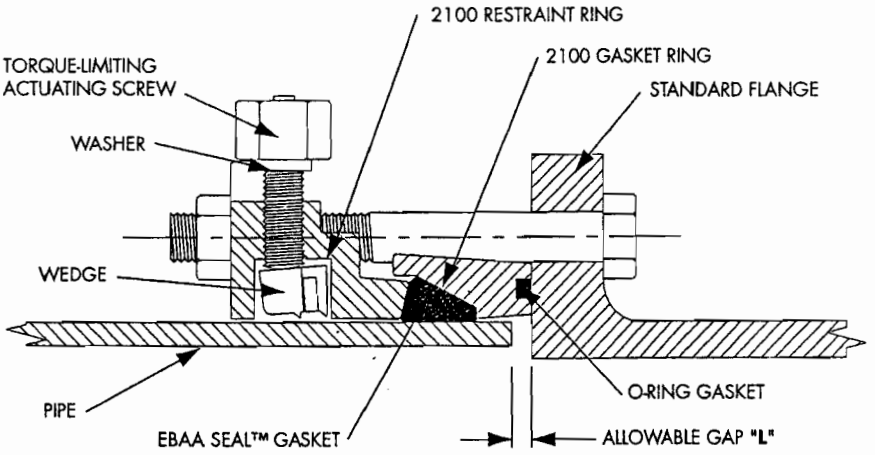

Some flange adapters use a standard mechanical joint gasket for both the pipe and the flange seal and are prone to leaks. Other flanged coupling adapters separate the pipe seal from the flange seal but are not restrained, and require separate restraining devices. Still some devices use "set screws" to try to achieve restraint; but set screw restraints are ineffective when compared to the pull-out strength of the standard flanged joint.

THE SERIES 2100 MEGAFLANGE RESTRAINED FLANGE ADAPTER IS TOTALLY DIFFERENT!

The **Series 2100 MEGAFLANGE®** restrained flange adapter is comprised of two rings. The first is the restraint ring which incorporates wedges around the circumference of the ring to grip the pipe firmly and securely. The wedge style of restraint offers enormous pullout strength when compared to set screw restraints. The resiliency of the wedge style restraint allows the Series 2100 to withstand severe moment loads.

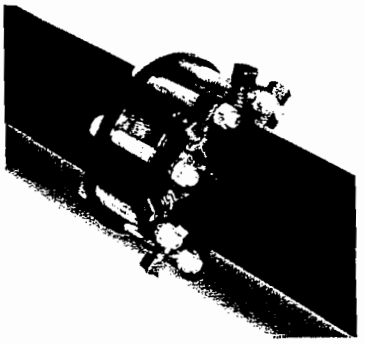

The second ring is the gasket ring which separates the seals dedicated to each sealing surface. This ring allows pipe to be cut to lengths in the field at a tolerance of 0.6 inch or more. And, the gasket ring also enables the joint to deflect during assembly.

DEFLECTION

Traditional flanged joint connections require a tremendous amount of torque on the bolts to achieve a good seal. The pipe layout must be precisely planned to avoid misalignment errors due to deviations in appurtenances or pipe fabrication.

The Series 2100 MEGAFLANGE is a speedy, on-site fabrication tool which is generous in its deflection limits, from 1° to 5° depending on pipe size. The deflection capabilities provided by the gasket ring allow offset of almost nineteen inches of an eighteen foot length of pipe through the eight inch size.

EBAA IRON™
EBAA IRON SALES INC.

ASSEMBLY PROCEDURE

Assembly of the MEGAFLANGE flange adapter is straightforward and easy to accomplish. As with any joint connection care should be taken to ensure:

- Cleanliness of joint and mating surfaces
- Lubrication of EBAA Seal™ gasket surfaces

In addition attention should be given to the

- Maximum assembly deflection limits (See back page)
- Maximum connection gap "L" limits (back page)

FLANGE BOLT TORQUE RANGE		
3 INCH	45 - 60	FT-LBS
4 - 6 INCH	75 - 90	FT-LBS
8 - 24 INCH	90 - 110	FT-LBS
30 - 36 INCH	110 - 130	FT-LBS

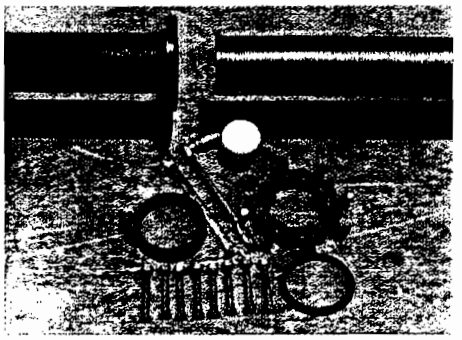

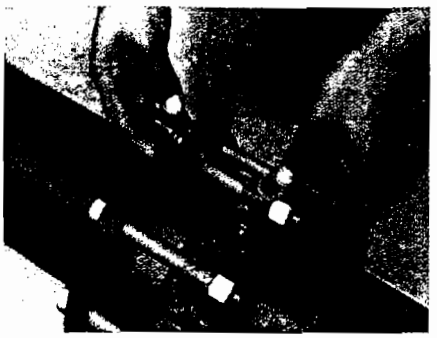

1. IDENTIFY THE PIPE. The MEGAFLANGE 2100 Flange Adapter, sizes 4" through 12", is designed for use with ductile iron, (C900 & IPS O.D. (ASTM D2241) pipe, and steel pipe. Check to see if the spacers under the screws are in place. If the pipe is ductile iron C.I. O.D. PVC (C900) **DO NOT REMOVE THE SPACERS.** If the pipe is steel or IPS O.D. PVC, **REMOVE TH SPACERS (Sizes 4 through 12)**

The 3" size is designed for use on ductile iron, IPS O.D. PVC and steel pipe. Sizes 14" through 24" are designed for ductile iron C905 C.I.O.D. PVC pipe. Sizes 30" and larger are designed for ductile iron pipe only. There are no spacers on the 3" and the 14" larger sizes.

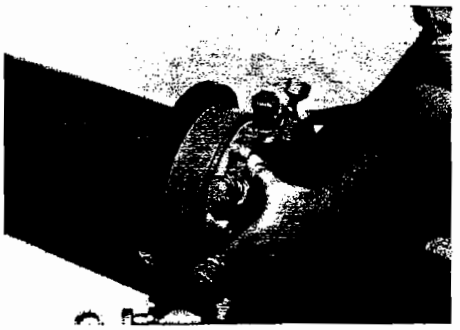

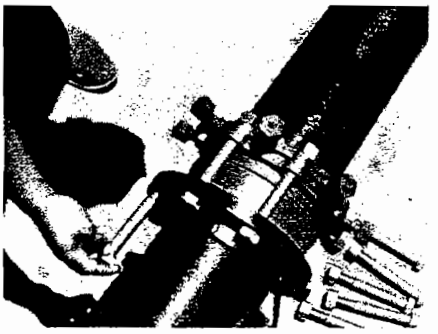

5. Bring the pipe and flanges together within the maximum assembled deflection and maximum allowable gap "L" to the flange face. Slide the gasket ring, gasket, and restraint ring until contact is made with the opposing flange.

6. Insert and tighten all flange bolts. Torque all flange bolts in alternate manner to the value listed in the table at the left. Be s to make any necessary joint deflection before tightening the a ating screws. Joint deflection should not exceed the maxim allowable deflection. Be sure

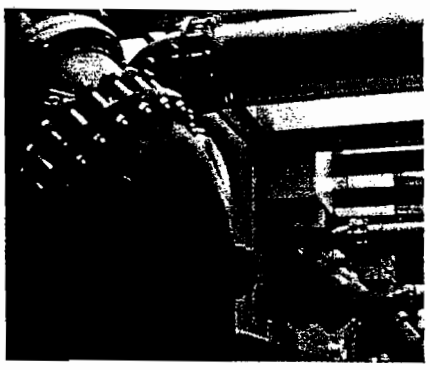

MEGAFLANGE ADVANTAGES

- Fully restrained
- Time saving and field adaptable
- Pipe can be cut to length at the jobsite
- Joint deflection to 5°
- Use on all classes of ductile pipe and PVC pipe
- Torque limiting actuating screws assure proper grip
- Wedges securely grip the pipe much better than set screws
- Easy disassembly allows fast removal of valves, meters or fittings for replacement or repair

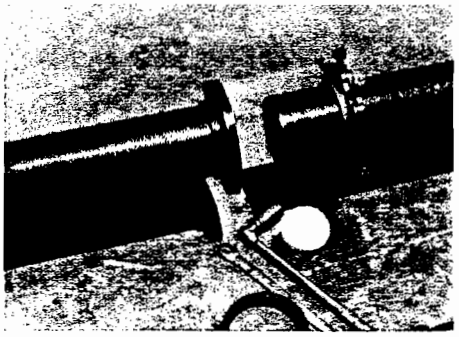

2. Cut the pipe to the required length. Clean the end of the pipe for a length of approximately one foot using a wire brush if needed, removing all excess paint and foreign material. Also clean the opposing flange to be connected to the 2100. Place the 2100 restraint ring on the clean pipe with the lip facing the plain end.

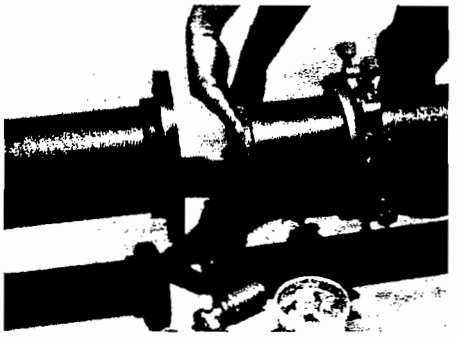

3. Lubricate and place the **EBAA Seal Gasket** on the clean pipe following the restraint ring. **(USE A TRANSITION GASKET IN PLACE OF THE EBAA SEAL GASKET FOR STEEL PIPE AND IPS O.D. PIPE.)**

4. Place the O-ring into the groove of the 2100 gasket ring. (This step has already been completed in all sizes except 30" and larger.) Place the gasket ring on the pipe with the O-ring facing the pipe end and the gasket recess facing the EBAA Seal (or Transition) Gasket and restraint ring.

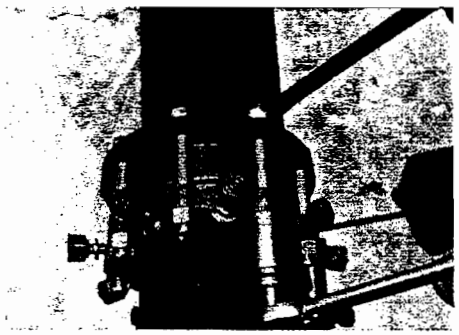

that deflection of the joint does not cause the end of the pipe to be separated from the opposing flange more than the maximum allowable gap **"L"**.

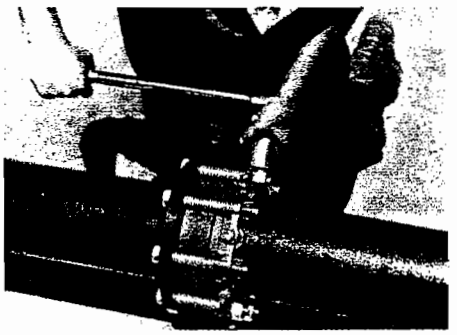

7. Tighten the actuating screws in an alternating manner until all wedges touch the pipe. Continue tightening the nuts in an alternating pattern until all of the torque-limiting nuts have been twisted off.

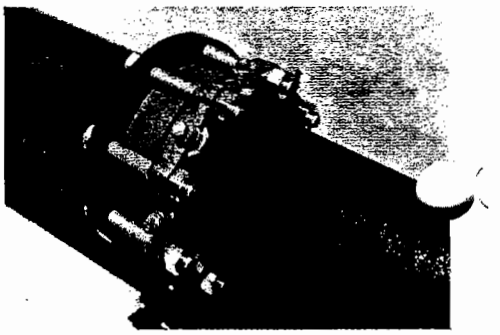

8. If removal is necessary, utilize the 5/8" hex-head provided. For reinstallation, repeat steps 2 through 7, torquing the actuating screws to 70 ft-lbs or until the hex heads bottom out on the spacers or the gland.

MEGAFLANGE TESTING RESULTS

PVC TESTING

- **Quick Burst Test**
  DR18 tested to 755 psi
  DR 14 tested to 985 psi

- **Long Term Pressure Test**
  On DR18 PVC pipe at 615 psi
  for 1000 hours without failure

- **Cyclic Pressure Test**
  DR18 tested from 94 to 188 psi
  for over 1,000,000 cycles

DUCTILE IRON AND STEEL TESTING

- **Leakage Test** (one minute required) *Tested to twice rated pressure without leaking*
- **Hydrostatic Test** (one minute required) *3 to 6" sizes tested to 5 times rated pressure*
  8 & 10" sizes tested to 4 times rated pressure
  12" size tested to 3 times rated pressure

- **Flexural Test** *Tested to withstand a bending moment based on requirements of NFPA 13-1991 "Standard for Installation of Sprinkler Systems"*

PRESSURE RATINGS

NOMINAL PIPE SIZE	3	4	6	8	10	12	14	16	18	20	24	30	36
DUCTILE IRON	350 UL▼	350 UL▼	350 UL▼	350 UL▼	300 UL▼	350 UL▼	350	350	300	250	200	150	150
SF	5:1	5:1	5:1	4:1	4:1	3:1	2:1	2:1	2:1	2:1	2:1	2:1	2:1
STEEL PIPE*	350 UL•	350 UL•	350 UL•	350 UL•	350 UL•	350 UL•	N/A	N/A	N/A	N/A	N/A	N/A	N/A
SF	5:1	5:1	5:1	4:1	4:1	3:1							
C900 PVC PIPE													
DR14	N/A	200 FM✦	200 FM✦	200 FM✦	200 FM✦	200 FM✦	N/A	N/A	N/A	N/A	N/A	N/A	N/A
SF		FULL✣	FULL	FULL	FULL	FULL							
DR18	N/A	150 FM✦	150 FM✦	150 FM✦	150 FM✦	150 FM✦	235	235	235	235	N/A	N/A	N/A
SF		FULL	FULL	FULL	FULL	FULL	FULL	FULL	2.5:1	2.5:1			
DR25	N/A	100	100	100	100	100	165	165	165	165	165	N/A	N/A
SF		FULL	FULL	FULL	FULL	FULL	FULL	FULL	FULL	FULL	2.5:1		
DR 32.5	N/A	N/A	N/A	N/A	N/A	N/A	125	125	125	125	125	N/A	N/A
SF							FULL	FULL	FULL	FULL	FULL		
IPS PVC PIPE*													
SDR 17	250	250	250	250	250	250	N/A	N/A	N/A	N/A	N/A	N/A	N/A
SF	FULL	FULL	FULL	FULL	FULL	FULL							
SDR 21	200	200	200	200	200	200	N/A	N/A	N/A	N/A	N/A	N/A	N/A
SF	FULL	FULL	FULL	FULL	FULL	FULL							
SDR 26	160	160	160	160	160	160	N/A	N/A	N/A	N/A	N/A	N/A	N/A
SF	FULL	FULL	FULL	FULL	FULL	FULL							

* Transition gasket required.
• UL-listed for above or below ground installation on schedule 40 steel pipe at pressures listed.
▼ UL-listed for below ground installation with all classes of listed ductile iron pipe at pressures listed.
✦ Factory Mutual approved for use on C900 Class 150 (DR18) and Class 200 (DR14) PVC pressure pipe in four through twelve inch sizes.
✣ A FULL safety factor is when the restraint and the pipe have been tested to the same requirements as the pipe alone. (See Megaflange Testing Results: PVC Testing.)

TECHNICAL NOTES

◆ Listings and approvals for Series 2100 MEGAFLANGE:

UL Sizes 3" through 12" are listed by Underwriters Laboratories, Inc., category VIZM "Fittings, Rubber Gasketed." The listing is for both above and below ground use on schedule 40 steel pipe. The Megaflange is also listed for below ground use on ductile iron pipe.

FM The Series 2100 Megaflange adapter is Factory Mutual approved for use on C900 Class 150 and Class 200 PVC pressure pipe in four through twelve inch sizes.

◆ For use in above ground flanged pipe systems such as treatment plants and pumping stations, or in underground applications.

◆ Can be used on all classes of ductile iron pipe.

◆ Compatible with any flange conforming to ANSI/AWWA C115/A21.15. (Non-standard flanged connections may require different bolts.)

◆ Made completely of ductile iron conforming to ASTM A536.

◆ Gasket ring protected with a coating of fusion bonded epoxy.

◆ For test pressures above the rated pressures shown, consult the engineering department of EBAA Iron, Inc. for recommendations.

SAMPLE SPECIFICATION

Restrained flange adapters shall be used in lieu of threaded or welded flanged spool pieces. Flange adapters shall be made of ductile iron conforming to ASTM A536 and have flange bolt circles that are compatible with ANSI/AWWA C115/A21.15.

Restraint for the flange adapter shall consist of a plurality of individually actuated gripping wedges to maximize restraint capability. Torque limiting actuating screws shall be used to insure proper initial set of the gripping wedges.

The flange adapters shall be capable of deflection during assembly or permit lengths of pipe to be field cut to allow a minimum 0.6" gap between the end of the pipe and the mating flange without affecting the integrity of the seal.

For PVC pipe, the flange adapter will have a pressure rating equal to the pipe.

For Ductile Iron Pipe, the flange adapter shall have a safety factor of 2:1 minimum.

The flange adapter shall be the SERIES 2100 MEGAFLANGE adapter as produced by EBAA Iron, Inc. or approved equal.

DIMENSIONAL DATA

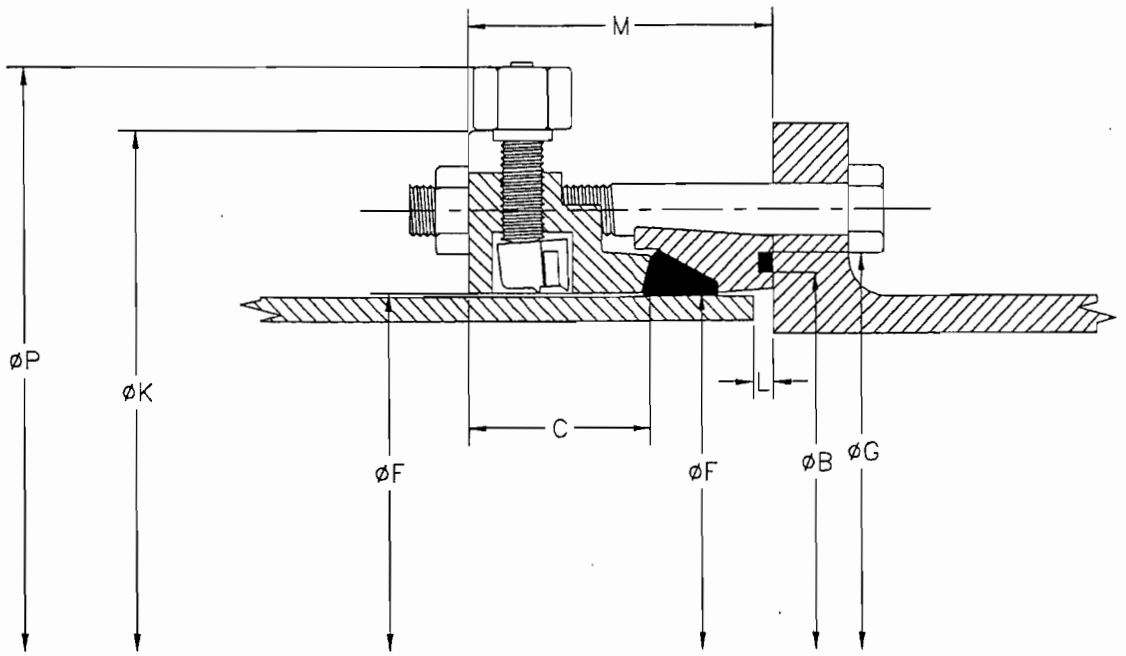

SIZE	SERIES NUMBER	RESTRAINT RING K	F	C	GASKET RING F	B	G	NO.	BOLTS DIA	LENGTH	"L" MAX	ASSEMBLY DEFLECTION	M	P*	SHIPPING WEIGHT
3	2103	7.50	4.06	2.22	4.06	4.28	4.88	4	5/8	5-1/2	0.7	5.0	3.97	9.20	14
4	2104	9.00	4.90	2.22	4.90	5.37	5.97	8	5/8	5-1/2	0.6	5.0	3.97	10.04	20
6	2106	11.00	7.00	2.30	7.00	7.47	8.07	8	3/4	6	0.8	5.0	4.30	12.14	32
8	2108	13.50	9.15	2.43	9.15	9.75	10.35	8	3/4	6	0.9	5.0	4.49	14.29	38
10	2110	16.00	11.20	2.53	11.20	11.75	12.35	12	7/8	7-1/2	1.0	3.0	4.66	16.34	65
12	2112	19.00	13.30	2.53	13.30	13.84	14.44	12	7/8	7-1/2	1.0	3.0	4.78	18.44	73
14	2114	21.00	15.49	2.50	15.49	16.07	16.86	12	1	8	1.3	2.0	5.00	20.54	89
16	2116	23.50	17.59	2.50	17.59	18.17	18.96	16	1	8	1.3	2.0	5.00	22.64	109
18	2118	25.00	19.69	2.60	19.69	20.20	20.99	16	1-1/8	8-1/2	1.3	1.5	5.10	24.74	134
20	2120	27.25	21.79	2.60	21.79	22.38	23.17	20	1-1/8	8-1/2	1.3	1.5	5.10	26.84	157
24	2124	32.00	25.99	2.60	25.99	26.66	27.46	20	1-1/4	8-1/2	1.3	1.0	5.10	31.04	192
30	2130	38.50	32.17	3.25	32.17	32.92	34.12	28	1-1/4	10	2.0	3.0	6.00	38.80	296
36	2136	45.45	38.47	3.25	38.47	39.22	40.42	32	1-1/2	10-1/2	2.0	3.0	6.00	44.60	426
42	2142	52.32	44.72	3.00	44.72	45.83	47.03	36	1-1/2	12	2.0	1.0	8.02	50.80	642
48	2148														
60	2160														

***The "P" dimension is measured with the torque-limiting nuts twisted off. All dimensions are inches and are subject to change without notice. Series 2100 is provided with bolts and gaskets.**

®
Dedicated to Safe Drinking Water
American Water Works
Association MEMBER

EBAA IRON™
EBAA IRON SALES INC.
"YOUR CONNECTION TO THE FUTURE"™
P.O. BOX 857
EASTLAND, TX 76448 USA
254-629-1731 • 1-800-433-1716
TELEFAX: 254-629-8931
ebaa@eastland.net http://www.ebaa.com

Milherst Construction, Inc.
P.O. Box 631
Getzville, New York 14068

Phone (716) 688-9098
Fax (716) 688-9562

Submittal No.36 Rev. 1

Lehigh Valley RR Derailment Site

Owner NYS Department of Environmental Conservation
Bureau of Construction Services, 12th Floor
625 Broadway
Albany, NY 12233-7013

Contractor Milherst Construction, Inc
Date April 3, 2002

Item: Flange Adapters — For use in Pressure Reducing Vault A & B

Specification:
Section: 15060
Page No.: 15060-4
Para. No.: D. - 2.
Drawing No.:
Location: As required

Note: These are non-restrained.
Stainless tie rods will be used.

Milherst Construction, Inc. certifies that all quantities, dimensions, specified performance criteria, installation requirements, materials, catalog numbers, and similar data with respect thereto have been reviewed or that each Shop Drawing or sample has been coordinated with other Shop Drawings and samples and with the requirements of the Work and Contract Documents.

By: Charles F. Kubiniec
Charles F. Kubiniec
Project Manager

- Do not use anchor stud units

☐ APPROVED
☒ APPROVED AS CORRECTED
~~(Resubmit final copy for file)~~
☐ REVISE AND RESUBMIT BEFORE PROCEEDING
☐ NOT APPROVED

Review only for conformance with the design concept of the project and with information given in the Contract Documents. The Contractor is responsible for: verifying that dimensions are confirmed and correlated at the job site; obtaining information that pertains to the fabrication processes or to techniques of construction, and: coordinating the work of all subcontractors.
STEARNS & WHELER, LLC Engineers and Scientists

By TJF Date 5/6/02

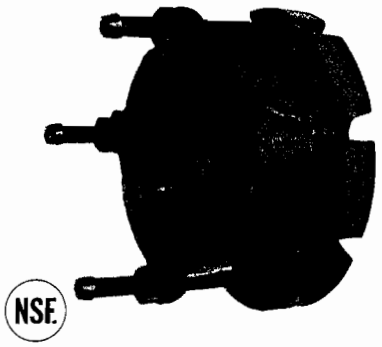

MODEL 3521 TRANSITION FLANGED COUPLING ADAPTER

CENTER BARREL: Ductile Iron per ASTM A536 and AWWA C219.

END GLANDS: Ductile Iron per ASTM A536 and AWWA C219.

GASKET: SBR transition design from 100% new rubber to insure performance under varying pressures with superior storage characteristics per AWWA C219. Suitable for mild acids, water and salt media with a temperature range of -40° to + 150° F.

BOLTS & NUTS: Low Alloy Steel per ASTM A325, ASTM A563, and AWWA C219.

ANCHOR STUDS: Type 304 (18-8) Stainless Steel. (Optional joint restraint)

FINISH: Shop coat lacquer or epoxy polyester.

Pipe Size			Pipe OD Ranges		Body Length Dim - A		Overall Length Dim -B		Gland OD Dim - C		Flanged Adapter		Approx. Wt.	
in.	mm.		in.	mm.	in.	mm.	in.	mm.	in.	mm.	Standard Unit	Anchor Studs	lbs.	kgs.
4	100	OD	4.00-4.13	102-105	3.0	76	6.5	165	8.8	224	$147.00	$189.40	24	11
		AA	4.20-4.50	107-144										
		A	4.50-4.85	114-123										
		B	4.80-5.10	122-130										
		C	5.05-5.40	128-137										
6	150	OD	6.00-6.14	152-156	4.5	114	7.1	181	10.9	227	187.70	234.80	34	15
		AA	6.27-6.72	159-171										
		A	6.62-6.95	168-177										
		B	6.90-7.22	175-183										
		C	7.19-7.45	183-189										
8	200	OD	8.00-8.16	203-207	4.5	114	7.1	181	13.6	344	257.30	304.60	47	21
		AA	8.40-8.82	213-224										
		A	8.62-9.05	219-230										
		B	9.05-9.45	230-240										
		C	9.10-9.79	231-249										
10	250	A	10.70-11.10	272-282	4.5	114	7.1	181	16.2	411	466.60	524.50	68	31
		B	11.10-11.50	282-292										
		C	11.60-12.12	295-308										
12	300	A	12.75-13.20	324-335	4.5	114	7.1	181	18.6	472	518.90	605.00	91	41
		B	13.20-13.50	335-343										
		C	13.78-14.38	350-365										

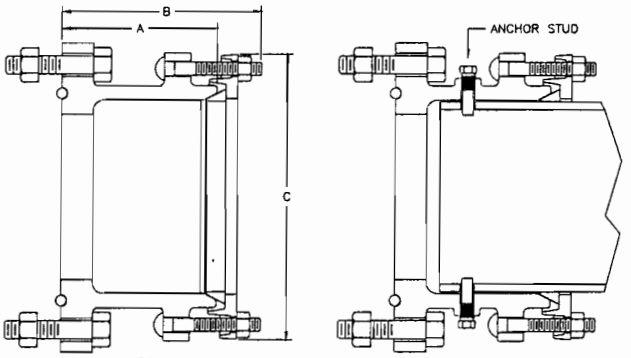

SUBMITTAL 36 REV. 1
HERST CONSTRUCTION, INC.
Job: LEHIGH VALLEY R.R. DERAILMENT SITE WATER DISTRIBUTION SYSTEM
Item: FLANGE ADAPTER
Descr: USE IN VALVE VAULT PITS
Reviewed By: CFK
Date: MAY 1, 2002

HOW TO ORDER: Specify Model Number, Pipe Size with Letter Code.
EXAMPLE: 6" Flanged Valve to 6" Cast Iron O.D. 7.10. Order 3521 - 6B.

Material Specifications Subject to Change.

Milherst Construction, Inc.
P.O. Box 631
Getzville, New York 14068

Phone (716) 688-9098
Fax (716) 688-9562

Submittal No.37

Lehigh Valley RR Derailment Site

Owner NYS Department of Environmental Conservation
Bureau of Construction Services, 12th Floor
625 Broadway
Albany, NY 12233-7013

Contractor Milherst Construction, Inc
Date April 3, 2002

Item: Flanged Fittings — For use in Pressure Reducing Vault A & B

Specification:

Section: 15060
Page No.: 15060-4
Para. No.: C. and D.
Drawing No.:
Location: As required

Milherst Construction, Inc. certifies that all quantities, dimensions, specified performance criteria, installation requirements, materials, catalog numbers, and similar data with respect thereto have been reviewed or that each Shop Drawing or sample has been coordinated with other Shop Drawings and samples and with the requirements of the Work and Contract Documents.

By: Charles F. Kubiniec
Charles F. Kubiniec
Project Manager

☒ **APPROVED**
☐ **APPROVED AS CORRECTED**
(Resubmit final copy for file)

☐ **REVISE AND RESUBMIT BEFORE PROCEEDING**
☐ **NOT APPROVED**

Review only for conformance with the design concept of the project and with information given in the Contract Documents. The Contractor is responsible for: verifying that dimensions are confirmed and correlated at the job site; obtaining information that pertains to the fabrication processes or to techniques of construction, and: coordinating the work of all subcontractors.
STEARNS & WHELER, LLC Engineers and Scientists

By TJF Date 4/10/02

Submittal 37 4-3-02 CFK

DUCTILE IRON AND GRAY IRON FLANGED FITTINGS

Tyler Pipe
Subsidiary of
Tyler Corporation

SAMPLE SPECIFICATION

CAST IRON OR DUCTILE IRON FLANGED FITTINGS shall be made in strict accordance with ANSI/AWWA C110. They shall conform to details and dimensions published therein and shall be adequate for water pressure of 250 lbs. P.S.I.

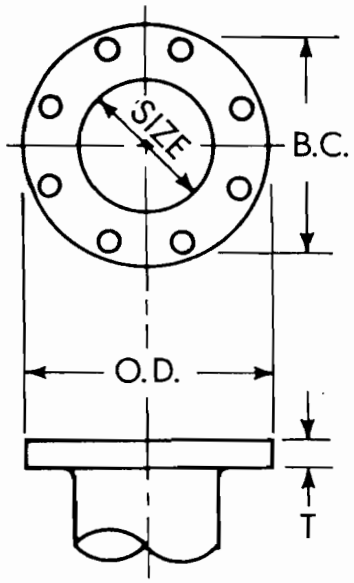

NOTE: No flange joint material furnished.

Joint Dimensions in Inches

Nominal Pipe Size Inch	Dimensions					
	Flange O.D.	Dia. of Bolt Circle	Flange Thickness T	Bolt Hole Diameter	Number of Bolts	Bolt Diam. and Length
*2	6	4.75	.62	.75	4	5/8 x 2 1/4
3	7.5	6	.75	.75	4	5/8 x 2 1/2
4	9	7.5	.94	.75	8	5/8 x 3
6	11	9.5	1.00	.875	8	3/4 x 3 3/4
8	13.5	11.75	1.12	.875	8	3/4 x 3 1/2
10	16	14.25	1.19	1.00	12	7/8 x 3 3/4
12	19	17	1.25	1.00	12	7/8 x 3 3/4
14	21	18.75	1.38	1.125	12	1 x 4 1/4
16	23.5	21.25	1.44	1.125	16	1 x 4 1/4
18	25	22.75	1.56	1.25	16	1 1/8 x 4 3/4
20	27.5	25	1.69	1.25	20	1 1/8 x 5
24	32	29.5	1.88	1.375	20	1 1/8 x 5 1/2
30	38.75	36	2.12	1.375	28	1 1/4 x 6 1/4
36	46	42.75	2.38	1.625	32	1 1/2 x 7

Note: Drilling templates are in multiples of four, so that fittings may be made to face in any quarter. Bolt holes shall straddle the center line.

BENDS

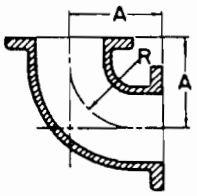

90° Bend (1/4)
5-700

Size	Dimensions R	Dimensions A	Wt.
*2	3	4.5	14
3	**4**	**5.5**	**25**
4	4.5	6.5	45
6	**6**	**8**	**65**
8	7	9	105
10	**9**	**11**	**165**
12	10	12	235
14	**11.5**	**14**	**330**
16	12.5	15	430
18	**14**	**16.5**	**530**
20	15.5	18	685
24	**18.5**	**22**	**1085**
30	21.5	25	1755
36	**24.5**	**28**	**2690**

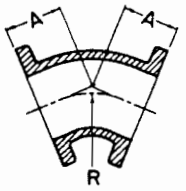

45° Bend (1/8)
5-705

Size	Dimensions R	Dimensions A	Wt.
*2	2.44	2.5	12
3	**3.62**	**3**	**20**
4	4.81	4	40
6	**7.25**	**5**	**55**
8	8.44	5.5	90
10	**10.88**	**6.5**	**130**
12	13.25	7.5	195
14	**12.06**	**7.5**	**245**
16	13.25	8	315
18	**14.5**	**8.5**	**375**
20	16.88	9.5	485
24	**18.12**	**11**	**730**
30	27.75	15	1335
36	**35**	**18**	**2155**

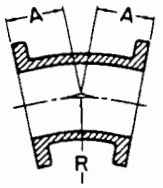

22½° Bend (1/16)
5-709

Size	Dimensions R	Dimensions A	Wt.
*2	5.03	2.5	11
3	**7.56**	**3**	**20**
4	10.06	4	40
6	**15.06**	**5**	**55**
8	17.62	5.5	90
10	**22.62**	**6.5**	**135**
12	27.67	7.5	205
14	**25.12**	**7.5**	**250**
16	27.62	8	325
18	**30.19**	**8.5**	**385**
20	35.19	9.5	505
24	**37.69**	**11**	**755**
30	57.81	15	1385
36	**72.88**	**18**	**2235**

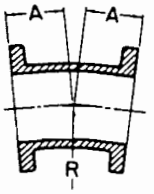

11¼° Bend (1/32)
5-711

Size	Dimensions R	Dimensions A	Wt.
*2	10.15	2.5	11
3	**15.25**	**3**	**20**
4	20.31	4	40
6	**30.5**	**5**	**55**
8	35.5	5.5	90
10	**45.69**	**6.5**	**135**
12	55.81	7.5	205
14	**50.75**	**7.5**	**255**
16	55.81	8	325
18	**60.94**	**8.5**	**385**
20	71.06	9.5	505
24	**76.12**	**11**	**760**
30	116.75	15	1395
36	**147.25**	**18**	**2250**

***Not included in AWWA C110.**

ANSI/AWWA C110/A21.10, ANSI/AWWA C111/A21.11

DUCTILE IRON AND GRAY IRON FLANGED FITTINGS

TEES, CROSSES, REDUCING TEES

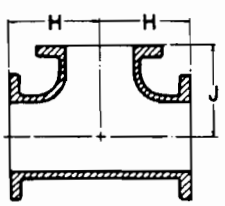

Straight Tees, Reducing on Branch Tees
5-720

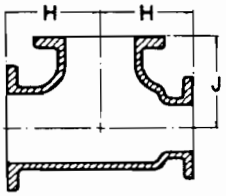

*** Reducing on Run**
5-720-a

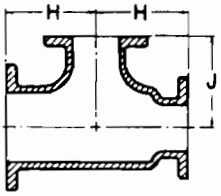

***Reducing on Run and Branch**
5-720-b

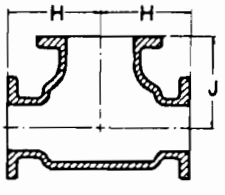

*** Bullhead Tees**
5-720-c

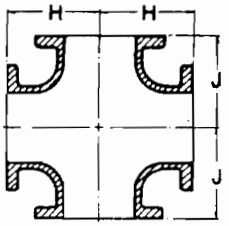

Straight and Reducing Crosses
5-731

Size			Dimensions		Weights	
Run	Run	Branch	H	J	Tee	Cross
*2	2	2	4.5	4.5	35	
3	**3**	**3**	**5.5**	**5.5**	**40**	**50**
*4	4	2	6.5	6.5	50	60
4	**4**	**3**	**6.5**	**6.5**	**60**	**70**
4	4	4	6.5	6.5	65	80
4	**4**	**6**	**8.0**	**8.0**	**90**	
6	4	4	8.0	8.0	85	
6	**4**	**6**	**8.0**	**8.0**	**90**	
*6	6	2	8.0	8.0	85	
6	**6**	**3**	**8.0**	**8.0**	**85**	**95**
6	6	4	8.0	8.0	90	110
6	**6**	**6**	**8.0**	**8.0**	**95**	**120**
6	6	8	9.0	9.0	140	
8	**6**	**4**	**9.0**	**9.0**	**130**	
8	6	6	9.0	9.0	135	
8	**6**	**8**	**9.0**	**9.0**	**145**	
*8	8	3	9.0	9.0	130	140
8	**8**	**4**	**9.0**	**9.0**	**140**	**155**
8	8	6	9.0	9.0	145	165
8	**8**	**8**	**9.0**	**9.0**	**155**	**195**
8	8	10	11.0	11.0	260	
8	**8**	**12**	**12.0**	**12.0**	**310**	
†10	6	6	13.0	13.0	275	
†10	**6**	**8**	**13.0**	**13.0**	**290**	
†10	6	10	13.0	13.0	305	
†10	**8**	**6**	**13.0**	**13.0**	**280**	
†10	8	8	13.0	13.0	295	
†10	**8**	**10**	**13.0**	**13.0**	**325**	
10	10	4	11.0	11.0	205	220
10	**10**	**6**	**11.0**	**11.0**	**215**	**240**
10	10	8	11.0	11.0	225	265
10	**10**	**10**	**11.0**	**11.0**	**270**	**330**
10	10	12	12.0	12.0	355	
†12	**6**	**6**	**14.0**	**14.0**	**340**	
†12	6	8	14.0	14.0	360	

NOTE: No flange joint material furnished.

Size			Dimensions		Weights	
Run	Run	Branch	H	J	Tee	Cross
†12	6	10	14.0	14.0	380	
†12	**6**	**12**	**14.0**	**14.0**	**400**	
†12	8	6	14.0	14.0	355	
†12	**8**	**8**	**14.0**	**14.0**	**375**	
†12	8	10	14.0	14.0	395	
†12	**8**	**12**	**14.0**	**14.0**	**420**	
†12	10	6	14.0	14.0	390	
†12	**10**	**8**	**14.0**	**14.0**	**400**	
†12	10	10	14.0	14.0	420	
†12	**10**	**12**	**14.0**	**14.0**	**440**	
12	12	4	12.0	12.0	290	310
12	**12**	**6**	**12.0**	**12.0**	**295**	**320**
12	12	8	12.0	12.0	310	345
12	**12**	**10**	**12.0**	**12.0**	**360**	**415**
12	12	12	12.0	12.0	385	460
***14**	**14**	**4**	**14.0**	**14.0**	**400**	**430**
14	14	6	14.0	14.0	420	450
14	**14**	**8**	**14.0**	**14.0**	**435**	**475**
14	14	10	14.0	14.0	450	505
14	**14**	**12**	**14.0**	**14.0**	**470**	**555**
14	14	14	14.0	14.0	500	595
***16**	**16**	**4**	**15.0**	**15.0**	**525**	**555**
16	16	6	15.0	15.0	540	565
16	**16**	**8**	**15.0**	**15.0**	**555**	**590**
16	16	10	15.0	15.0	565	620
16	**16**	**12**	**15.0**	**15.0**	**590**	**665**
16	16	14	15.0	15.0	610	700
16	**16**	**16**	**15.0**	**15.0**	**635**	**755**
18	18	6	13.0	15.5	560	585
18	**18**	**8**	**13.0**	**15.5**	**560**	**605**
18	18	10	13.0	15.5	585	630
18	**18**	**12**	**13.0**	**15.5**	**605**	**670**
18	18	14	16.5	16.5	740	830
18	**18**	**16**	**16.5**	**16.5**	**760**	**880**
18	18	18	16.5	16.5	785	915
20	**20**	**6**	**14.0**	**17.0**	**710**	**735**

***Not included in AWWA C110.**
†H and J dimensions are two-inches longer than Straight Tees.

DUCTILE IRON AND GRAY IRON FLANGED FITTINGS

*REDUCING BASE BENDS

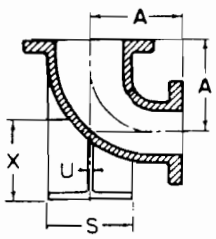

Base Under Large End
5-702 LE

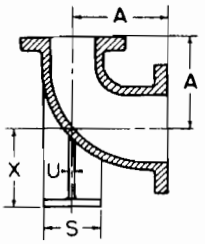

Base Under Small End
5-702 SE

Size	Dimensions			Wt.
	X	S	U	
4x3	5.5	6	.5	45
6x4	**7**	**7**	**.62**	**75**
8x4	8.38	9	.88	115
8x6	**8.38**	**9**	**.88**	**130**
10x6	9.75	9	.88	170
10x8	**9.75**	**9**	**.88**	**195**
12x6	11.25	11	1	230
12x8	**11.25**	**11**	**1**	**255**
12x10	11.25	11	1	285

*Not included in AWWA C110

*FLANGES

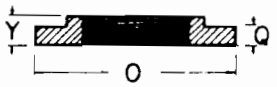

Flange for Steel Pipe 5-750
Reducing Flange for Steel Pipe 5-752

Flange for CI Pipe 5-751
Reducing Flange for CI Pipe 5-753

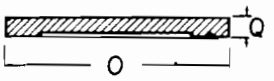

Under 12" Blind Flange

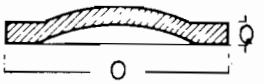

12" and Larger Blind Flange

Blind Flanges 5-754

Size	Dimensions				Wt.		
	O	Q	X	Y	5-750	5-751	5-754
2	6	.62	.....	1	4	.	4
2½	**7**	**.69**	.....	**1.13**	**6**	.	**7**
3	7.5	.75	1.8	1.19	7	7	8
4	**9**	**.94**	**1.89**	**1.31**	**12**	**12**	**14**
6	11	1.00	2.1	1.56	17	17	25
8	**13.5**	**1.12**	**2.31**	**1.75**	**25**	**28**	**40**
10	16	1.19	2.52	1.94	35	38	60
12	**19**	**1.25**	**2.73**	**2.19**	**55**	**58**	**80**
14	21	1.38	2.875	2.25	..	75	110
16	**23.5**	**1.44**	**3.188**	**2.5**	..	**95**	**145**
18	25	1.56	3.125	2.69	..	105	190
20	**27.5**	**1.69**	**3.5**	**2.88**	..	**135**	**250**
24	32	1.88	3.687	3.25	..	160	370
30	**38.75**	**2.12**	**4.875**	...	..	**255**	**580**
36	46	2.38	.....	...	..	390	880

NOTE: All flanges conform to ANSI/AWWA C115/A21.15-83 Standards.

FLANGE AND FLARE

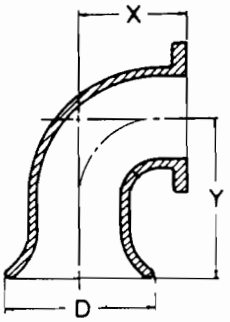

*** Flange and Flare 90° Bend**
5-765

Size	Dimensions			Wt.
	D	X	Y	5-765
3	7.5	5.5	8.5	25
4	**9**	**6.5**	**9.5**	**40**
6	11	8	12	70
8	**13.5**	**9**	**13**	**110**
10	16	11	15	175
12	**19**	**12**	**16**	**245**
14	21	14	22	450
16	**23.5**	**15**	**23**	**545**
18	25	16.5	24.5	675
20	**27.5**	**18**	**26**	**860**
24	32	22	30	1195

*Not included in AWWA C110

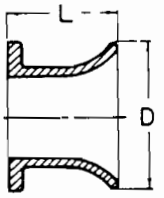

Flange and Flare Piece
5-766

Size	Dimensions		Wt.
	D	L	5-766
3	7.5	8	20
4	**9**	**8**	**30**
6	11	8	40
8	**13.5**	**10**	**70**
10	16	10	95
12	**19**	**12**	**155**
14	21	12	225
16	**23.5**	**16**	**330**
18	25	16	355
20	**27.5**	**18**	**460**
24	32	18	635

*TRUE WYE

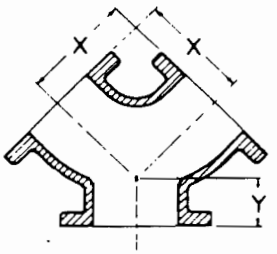

True Wye
5-767

Size		Dimensions		Wt.
Stem	Branches	X	Y	
4	4	6.5	3	50
6	**4**	**8**	**3.5**	**75**
6	6	8	3.5	80
8	**6**	**9**	**4.5**	**120**
8	8	9	4.5	125

*FLANGE SLUDGE SHOE

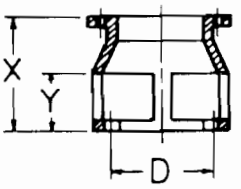

Flange Sludge Shoe
5-768

Size	Dimensions			Wt.
	D	X	Y	
3	5.75	12	6	25
4	**7**	**12**	**6**	**35**
6	7.87	12	6	45
8	**10.12**	**12**	**6**	**65**
10	12.25	12	6	85
12	**15.25**	**12**	**6**	**120**

*Not included in AWWA C110.

ANSI/AWWA C110/A21.10, ANSI/AWWA C111/A21.11

Milherst Construction, Inc.
P.O. Box 631
Getzville, New York 14068

Phone (716) 688-9098
Fax (716) 688-9562

Submittal No.38

Lehigh Valley RR Derailment Site

Owner NYS Department of Environmental Conservation
Bureau of Construction Services, 12th Floor
625 Broadway
Albany, NY 12233-7013

Contractor Milherst Construction, Inc

Date April 3, 2002

Item: Flanged Pipe For use in Pressure Reducing Vault A & B

Specification:

Section: 15060

Page No.: 15060-3

Para. No.: 2.02 B

Drawing No.:

Location: As required

Milherst Construction, Inc. certifies that all quantities, dimensions, specified performance criteria, installation requirements, materials, catalog numbers, and similar data with respect thereto have been reviewed or that each Shop Drawing or sample has been coordinated with other Shop Drawings and samples and with the requirements of the Work and Contract Documents.

By: Charles F. Kubiniec

Charles F. Kubiniec
Project Manager

☒ APPROVED
☐ APPROVED AS CORRECTED
(Resubmit final copy for file)

☐ REVISE AND RESUBMIT BEFORE PROCEEDING

☐ NOT APPROVED

Review only for conformance with the design concept of the project and with information given in the Contract Documents. The Contractor is responsible for: verifying that dimensions are confirmed and correlated at the job site; obtaining information that pertains to the fabrication processes or to techniques of construction, and: coordinating the work of all subcontractors.
STEARNS & WHELER, LLC Engineers and Scientists

By TJF Date 4/10/02

FLANGED PIPE

SCALE: NONE | DATE:

FAST FABRICATORS, INC.

LOUISVILLE, KY — HARTFORD, CT
COLUMBIA, SC — WASHINGTON, D.C.
BATON ROUGE, LA — LAKELAND, FL
MARYSVILLE, CA — LOS ANGELES, CA

MILHERST CONSTRUCTION INC.

Submittal # 30
4-3-02
CFK

Fast® Fabricators, Inc.

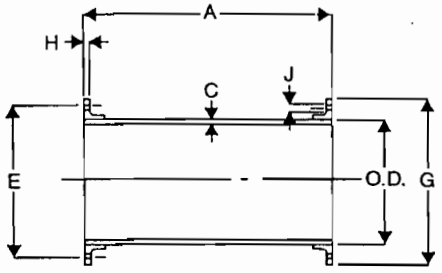

FLG. x FLG.

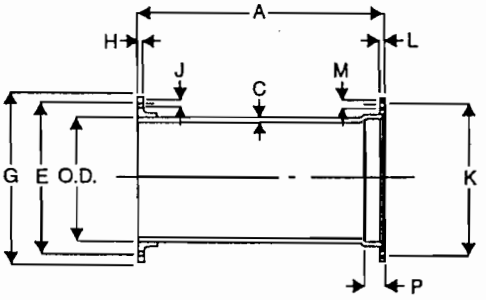

FLG. x M.J.

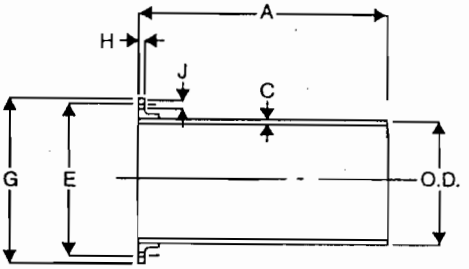

FLG. x P.E.

SIZE	A	C	O.D. MIN.	O.D. MAX.	E	G	H MIN.	H MAX.	NO. OF FLG'D BOLT HOLES	J	K MIN.	K MAX.	L MIN.	L MAX.	NO. OF M.J. BOLT HOLES	M MIN.	M MAX.	P
3	•	0.31	3.90	4.02	6.00	7.50	0.63	0.87	4	0.75	6.13	6.25	0.88	0.94	4	0.75	0.81	2.50
4	A	0.32	4.74	4.86	7.50	9.00	0.82	1.06	8	0.75	7.44	7.56	0.94	1.00	4	0.875	0.935	2.50
6	S	0.34	6.84	6.96	9.50	11.00	0.88	1.12	8	0.875	9.44	9.56	1.00	1.06	6	0.875	0.935	2.50
8	•	0.36	8.99	9.11	11.75	13.50	1.00	1.24	8	0.875	11.69	11.81	1.04	1.12	6	0.875	0.935	2.50
10	•	0.38	11.04	11.16	14.25	16.00	1.07	1.31	12	1.00	13.94	14.06	1.11	1.19	8	0.875	0.935	2.50
12	R	0.40	13.14	13.26	17.00	19.00	1.13	1.37	12	1.00	16.19	16.31	1.17	1.25	8	0.875	0.935	2.50
14	E	0.42	15.22	15.35	18.75	21.00	1.19	1.57	12	1.125	18.69	18.81	1.19	1.31	10	0.875	0.935	3.50
16	Q	0.43	17.32	17.45	21.25	23.50	1.25	1.63	16	1.125	20.94	21.06	1.26	1.38	12	0.875	0.935	3.50
18	U	0.44	19.42	19.55	22.75	25.00	1.37	1.75	16	1.25	23.19	23.31	1.32	1.44	12	0.875	0.935	3.50
20	I	0.45	21.52	21.65	25.00	27.50	1.50	1.88	20	1.25	25.44	25.56	1.38	1.50	14	0.875	0.935	3.50
24	R	0.47	25.72	25.85	29.50	32.00	1.69	2.07	20	1.375	29.94	30.06	1.50	1.62	16	0.875	0.935	3.50
30	E	0.51	31.94	32.08	36.00	38.75	1.87	2.37	28	1.375	36.82	36.94	1.69	1.81	20	1.125	1.185	4.00
36	D	0.58	38.24	38.38	42.75	46.00	2.13	2.63	32	1.625	43.69	43.81	1.88	2.00	24	1.125	1.185	4.00

1. Tolerance on length of FLG. x FLG. and FLG. x M.J. pipe shall be ±0.125".
2. Tolerance on lenth of FLG. x P.E. pipe shall be ±0.25".
3. Above materials shall meet all applicable sections of ANSI A 21.10, A 21.15, A 21.51, B2.1, B16.1 / AWWA C110, C115, C150, C151, and all revisions thereto.
4. Flanged pipe shall be made of ductile-iron pipe with cast-iron flanges threaded on.
5. Linings, if required, shall be in accordance with ANSI A 21.4.
6. The mechanical joint bell for 30" & 36" sizes of ductile-iron pipe have thicknesses different from those shown in ANSI A 21.11, Which are based on gray iron pipe. These reduced thicknesses provide a lighter-weight bell which is compatible with the wall thickness of ductile iron pipe.
7. Submitted material only. Consult engineer for application.

CLASSIFIED UL

Drinking Water System Components
CLASSIFIED BY
Underwriters Laboratories Inc.®
In accordance with
Standard ANSI/NSF 61-1991
97YO

Manufactured by Fast Fabricators, Inc. Fast. Fabricators, Inc.

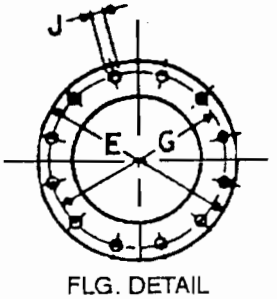

FLG. DETAIL

CERTIFICATE OF COMPLIANCE TO STANDARDS

Fast Fabricators' pipe and fittings are manufactured to the following standards:

The flanged pipe is manufactured with class 53 pipe in accordance with AWWA/ANSI C115/21.15 and drilled to meet ANSI B16.1 Standard.

The pipe is manufactured in accordance with all applicable requirements of ANSI/AWWA Standard C151/121.51.

The pipe groove depth dimension is manufactured in accordance with all applicable requirements of ANSI /AWWA Standard C606.

The pipe and fitting cement lining is manufactured in accordance with the requirements of ANSI/AWWA C104 / A21.4.

The exterior of the underground pipe will be coated with asphalt tar in accordance with ANSI/ AWWA C104/21.4.

All coating and lining for exterior piping, and all lining for interior piping, is certified to be in compliance with NSF 61 for potable water. Conforms to ANSI /AWWA C104/21.4.

All flange fittings are manufactured in accordance with ANSI/AWWA C110/A21.10 and are drilled to meet ANSI B16.1 Standard.

All flanged fittings and flanged pipe will be coated with a primer compatible with the top coat specified in the contract documents conforms to ANSI/AWWA C104/21.4.

All underground fittings will be manufactured in accordance with ANSI/AWWA C153/A21.53 and cement lined in accordance with AWWA/ANSI C104/A21.4.

Fast®

Fabricators, Inc.

Sean Sullivan, President
Fast Fabricators, Inc.

Headquarters: Fast Fabricators, 146 Hamilton Ct., Louisville, KY 40229
E-Mail: fastfab.com

Milherst Construction, Inc.
P.O. Box 631
Getzville, New York 14068

Phone (716) 688-9098
Fax (716) 688-9562

Submittal No.39

Lehigh Valley RR Derailment Site

Owner NYS Department of Environmental Conservation
Bureau of Construction Services, 12th Floor
625 Broadway
Albany, NY 12233-7013

Contractor Milherst Construction, Inc
Date April 3, 2002

Item: Pressure Reducing Valves 2" For use in Pressure Reducing Vault A & B

Specification:

Section: 15100
Page No.: 15100-4
Para. No.: 2.045
Drawing No.:
Location: Vaults

Milherst Construction, Inc. certifies that all quantities, dimensions, specified performance criteria, installation requirements, materials, catalog numbers, and similar data with respect thereto have been reviewed or that each Shop Drawing or sample has been coordinated with other Shop Drawings and samples and with the requirements of the Work and Contract Documents.

By: Charles F. Kubiniec

Charles F. Kubiniec
Project Manager

1. Vault "A"
   Inlet pressure 105 psi
   outlet pressure 55 psi

2. Vault "B"
   Inlet pressure 110 psi
   outlet pressure 35 psi

3. Must have two coat paint system

☐ **APPROVED**

☒ **APPROVED AS CORRECTED**
~~(Resubmit final copy for file)~~

☐ **REVISE AND RESUBMIT BEFORE PROCEEDING**

☐ **NOT APPROVED**

Review only for conformance with the design concept of the project and with information given in the Contract Documents. The Contractor is responsible for: verifying that dimensions are confirmed and correlated at the job site; obtaining information that pertains to the fabrication processes or to techniques of construction, and: coordinating the work of all subcontractors.
STEARNS & WHELER, LLC Engineers and Scientists

By TJF Date 4/10/02

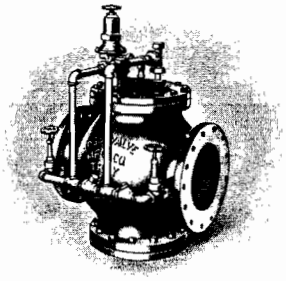

ESTABLISHED 1879

ROSS VALVE MFG. CO., INC.

PIONEERS IN THE DEVELOPMENT OF AUTOMATIC PRESSURE CONTROL SPECIALTIES

6 OAKWOOD AVENUE • POST OFFICE BOX 595 • TROY, NEW YORK 12181

TEL 518 274-0961 • FAX 518 274-0210 • www.rossvalve.com

SUBMITTAL

THREE (3) - ROSS 2" GLOBE MODEL 98EP
DIRECT ACTING PRESSURE REDUCING VALVES

OWNER / PROJECT

NEW YORK STATE ENVIRONMENTAL CONSERVATION
ALBANY, NY

LEHIGH VALLEY RR DERAILMENT WATERMAIN PROJECT D004328
PRESSURE REDUCING VALVE VAULTS "A" & "B"
SPECIFICATION SECTION 15100-2.05

CONSULTING ENGINEERS

STEARNS & WHELER LLC
ONE REMINGTON PARK DRIVE
CAZENOVIA, NY 13035

PHONE - 315/655-8161
FAX - 315/655-4180

SUPPLIER

M.J. PIPE & SUPPLY
609 BUFFALO ROAD
ROCHESTER, NY 14611

CONTACT - MIKE DOOLEY
PHONE - 716/235-6990
FAX - 716/235-6156

ROSS REPRESENTATIVE

J.L. MOORE, INC.
659 OAKWOOD AVENUE
EAST AURORA, NY 14052

CONTACT - DAVE MOORE
PHONE - 716/655-3433
FAX - 716/655-4440

MARCH 19, 2002

SUBMITTAL NOTES - M.J. PIPE P.O. - Page 1

PROJECT D9004328 LEHIGH VALLEY RR DERAILMENT WATERMAIN PRESSURE REDUCING VALVE VAULT "A"

ONE (1) - ROSS 2" FNPT GLOBE MODEL 98EP

The Ross Model 98EP direct acting pressure reducing valves shall be hydrostatically tested for body integrity and tight seating at the factory prior to shipment.

In order to design the valves with the set of springs to optimally work within a specific pressure range, and test under operating conditions similar to those in the field, please complete / confirm the following:

Inlet (supply) pressure ___-___ psi

Outlet (downstream) pressure ___-___ psi

Initial factory outlet pressure setting 55 psi

Each valve shall be furnished in accordance with Drawing 98EP-SCR-SS dated 3-8-02, including:

- ANSI B16.1 Class 125 cast iron globe body with
  Female threaded (FNPT) end connections

- Stainless steel component
  Seat ring (20)

- Tapped port with gauge cock on inlet & outlet (gauges by others)

SUBMITTAL NOTES - M.J. PIPE P.O. - Page 2

PROJECT D9004328 LEHIGH VALLEY RR DERAILMENT WATERMAIN PRESSURE REDUCING VALVE VAULT "B"

TWO (2) - ROSS 2" FNPT GLOBE MODEL 98EP

The Ross Model 98EP direct acting pressure reducing valves shall be hydrostatically tested for body integrity and tight seating at the factory prior to shipment.

In order to design the valves with the set of springs to optimally work within a specific pressure range, and test under operating conditions similar to those in the field, please complete / confirm the following:

Valve I.D. in Series	No. 1	No. 2
Inlet (supply) pressure	___-___ psi	___-___ psi
Outlet (downstream) pressure	___-___ psi	___-___ psi
Initial factory outlet pressure setting	35 psi	35 psi

Each valve shall be furnished in accordance with Drawing 98EP-SCR-SS dated 3-8-02, including:

- ANSI B16.1 Class 125 cast iron globe body with
  Female threaded (FNPT) end connections

- Stainless steel component
  Seat ring (20)

- Tapped port with gauge cock on inlet & outlet (gauges by others)

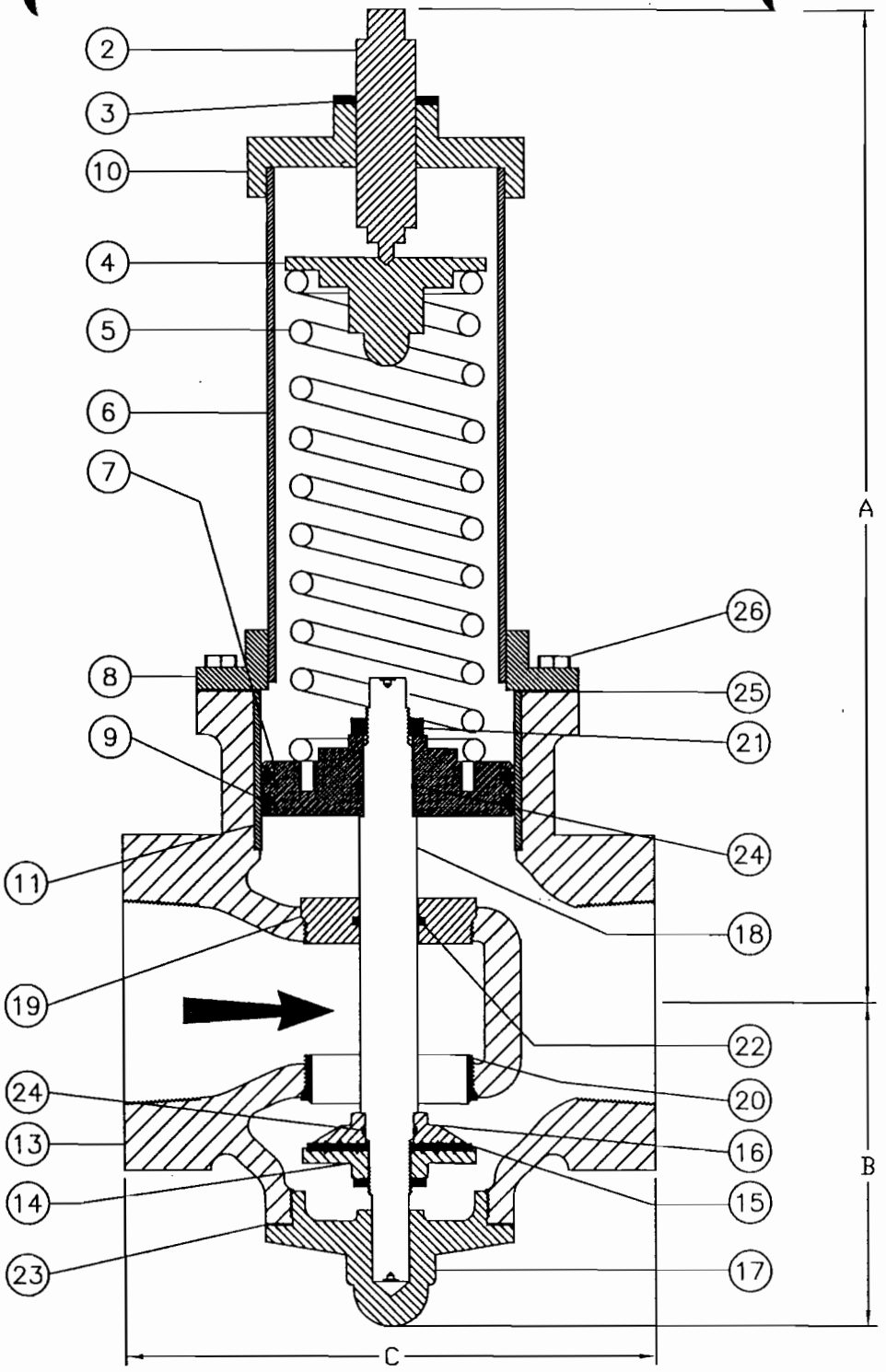

PART	DESCRIPTION	QTY	MATERIAL
2	ADJUSTING SCREW	1	BRONZE
3	LOCK NUT	1	BRONZE
4	SPRING WASHER	1	CAST IRON
5	SPRING(S)	VARY	STEEL
6	SPRING CHAMBER	1	BRONZE
7	PISTON	1	BRONZE
8	SPRING CHAMBER BASE	1	BRONZE
9	PISTON O–RING	2	BUNA–N
10	SPRING CHAMBER CAP	1	BRONZE
11	BUSHING	1	AMALGA
13	SHELL	1	CAST IRON
14	SEAT PACKING NUT	1	BRONZE
15	SEAT PACKING	1	POLYURETHANE
16	SEAT FOLLOWER	1	BRONZE
17	BOTTOM CAP	1	BRONZE
18	STEM	1	BRONZE
19	STEM GUIDE	1	BRONZE
20	SEAT RING	1	STAINLESS
21	STEM LOCK NUTS	3	BRONZE
22	STEM GUIDE O–RING	1	BUNA–N
23	BOTTOM CAP GASKET	1	COMPOSITION
24	STEM O–RING	2	BUNA–N
25	COVER GASKET	1	COMPOSITION
26	BOLT – SPRING CHAMBER	VARY	BRONZE

VALVE SIZE	DIMENSIONS		
	A	B	C
2"	15	4	7–1/2
2–1/2"	18–1/4	5	8–7/8
3"	18–1/4	5	8–7/8

ROSS VALVE Mfg. Co, Inc.
6 OAKWOOD AVENUE - TROY, NEW YORK, 12180 - TEL. (518) 274 0961
POST OFFICE BOX 595 - TROY, NEW YORK, 12181 - FAX (518) 274 0210
WEBSITE: www.rossvalve.com - E-MAIL: sales@rossvalve.com

DRAWING 98EP-SCR-SS | DATE 3-8-02 TJS

NO SCALE

Model 98EP

DIRECT ACTING PRESSURE REDUCING VALVE
WITH FNPT CONNECTIONS

PRESSURE REDUCING VALVE

Purpose: Control outlet pressure **Model Number: 98EP**

Sizes: 2" - 3"
Type: Direct Acting Throttling
Primarily Controlled By:
Hydraulic pressure (downstream)
Located: In line
Purpose: To prevent outlet pressure from exceeding a preset maximum level
External Piping: None
Ends: Flanged or screwed
Inlet Pressure: Maximum: 300 psi
Inlet Pressure: Minimum: 20 psi
Class: 125 ANSI for inlet pressures to 180 psi.
250 ANSI for inlet pressures to 300 psi.
Discharge Pressure: Range 5 – 240 psi
Fluid: Cold water service
Construction: Cast iron body, bronze internal trim, o-ring packing
Control Valves: None

Options

1. All bronze body
2. Stainless steel trim

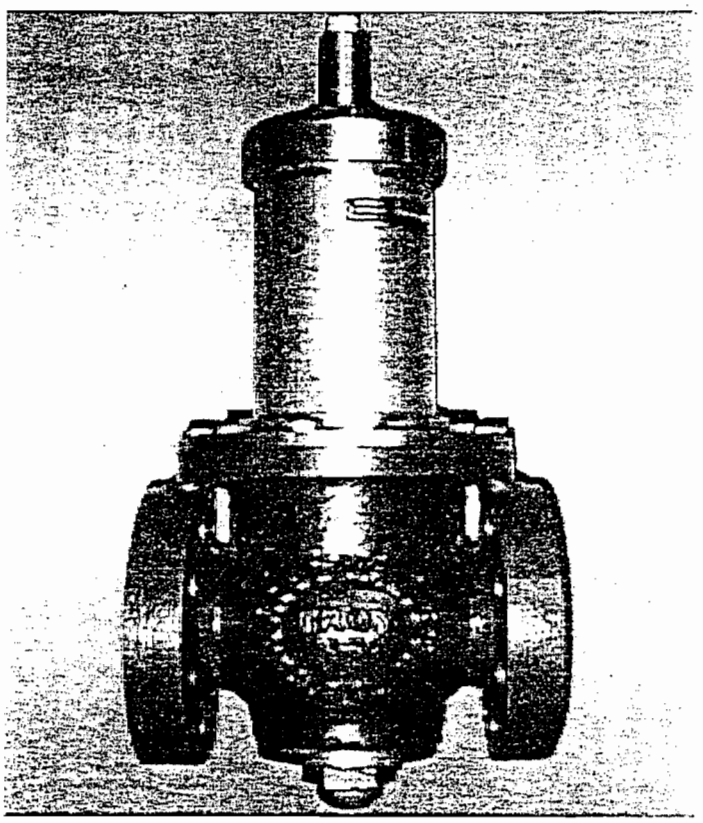

Ross engineers customize the basic **98EP** to accommodate individual needs.

Basic Applications

1. Utilize reserves in adjacent systems under emergency conditions.
2. Deal with shock waves when the line has other quick acting valves.
3. Service small subdivisions.

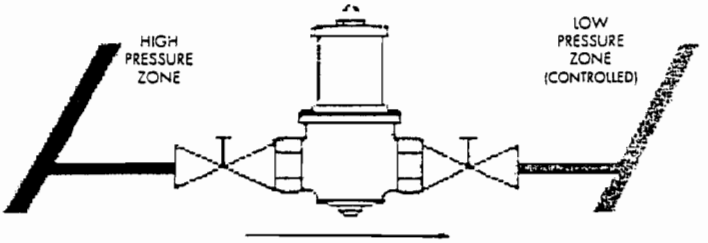

If: Supply's pressure is higher than the user capacity (User's demand may include quick increases and decreases.)
Ross Valve will: Pass only the quantity of water to the user, with a minimum of shock waves, to maintain a preset lower pressure. (adjustable)

PRESSURE REDUCING VALVE

Operation — Model Number: 98EP

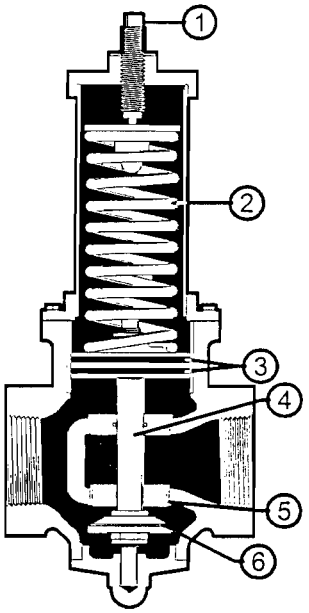

PARTS	
1	Adjusting Screw
2	Adjusting Spring
3	O-Rings
4	Stem
5	Seat Ring
6	Seat Packing

Control Unit

A straight forward control mechanism can be adjusted as pressure requirements change.

1. A diaphragm, connected to a stem is held in balance by a spring load on its top side and downstream water pressure underneath.
2. Seat packing against a seat ring, connected to the same stem - Holds back the high inlet pressure.

Operation

Because of it's fundamental, but sophisticated design, the valve can reduce a high water pressure to a lower pre-determined pressure regardless of flows.

1. When downstream (user) pressure increases, the
   a. Water pressure builds up beneath the diaphragm, pushes it up (as the springs above it contract.)
   b. Seat packing, which is connected to the diaphragm by a stem, also moves up.
   c. Valve throttles, decreasing the amount of water it lets flow through.
2. When downstream (user) pressure decreases, the
   a. Springs above the diaphragm, encountering decreased resistance, push the diaphragm down.
   b. Seat packing, also moves down.
   c. Valve opens wider, increasing the amount of water it lets flow through.

Recommendation for 40WR Installation

When a wide range of flows is required, for a 40WR installation, this smaller 98EP valve can be installed on a parallel pipe as follows:

The 98EP valve - Usually adjusted for a discharge pressure setting of 3 to 5 psi above the large valve setting, will handle the low flow requirements.

The large valve - Opens only when the demands exceed the small valve capacity and pressure drops to the large valve preset pressure.

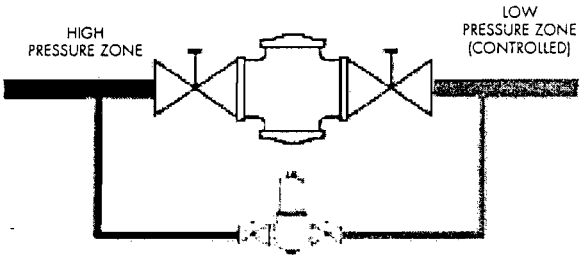

Benefits include:

1. **Reduces maintenance costs** on the larger, more expensive valve which result when the large valve operates at low flows.
2. Reduces noise which occurs when a large valve operates at low flows.
3. Avoids hunting action of a single large valve operating at low flows and the resulting pressure fluctuations.
4. Provides uninterrupted service while repacking one of the reducing valves.
5. Minimizes the effects of failure of a single large unit.

Cavitation

Cavitation may occur when 2 factors, a high pressure drop combined with a low outlet pressure, are present. Cavitation damage is caused by the collapse of the small cavities formed in the fluid stream during the sudden decrease in pressure. When the valve body or pipe walls confine the fluid stream and raise the pressure above the vapor pressure of the "bubbles", minute implosions occur resulting in extremely high impact forces. Where these implosions contact the valve parts, structural damage will result. If conditions for cavitation are expected, consult a Ross engineer.

ROSS MODEL 98EP
DIRECT ACTING PRESSURE REDUCING VALVE

INSTALLATION:

1. Flush line if possible before inserting valve.
2. Place valve in line with arrow on body pointing in the direction of flow.
3. Open downstream gate valve, slowly to full open.
4. Open upstream gate valve one-quarter (1/4) open, then slowly to full open.
5. Observe pressure on downstream side. If higher downstream pressure is desired, turn the adjusting screw (2) ***counter-clockwise*** (out). If lower pressure is desired, turn the adjusting screw ***clockwise*** (in).

OPERATION: The piston assembly is held in balance by the spring load on the top side of the piston (7) and the hydraulic downstream (reduced) pressure on its underside. The high inlet pressure is held back by the seat packing (15) seating against the seat ring (20). If the downstream pressure were to decrease due to increased demand, the spring(s) (5) would then no longer be balanced by the downstream pressure under the cup packing and would push the piston assembly down. Since the seat packing is a component of the piston assembly, it will also move down and allow high pressure water to pass through the valve. When sufficient water passes through the valve to satisfy the demand and increase the downstream pressure, the piston assembly is lifted against the spring load to shut off the flow through the valve. The stem is guided above and below the seat by stem guide (19) and bottom cap (17). The depth of the guide hole in the bottom cap also limits the opening of the valve.

DIFFERENTIAL PRESSURE GUIDE

Globe Body **Valve Sizes: 2" - 3"**

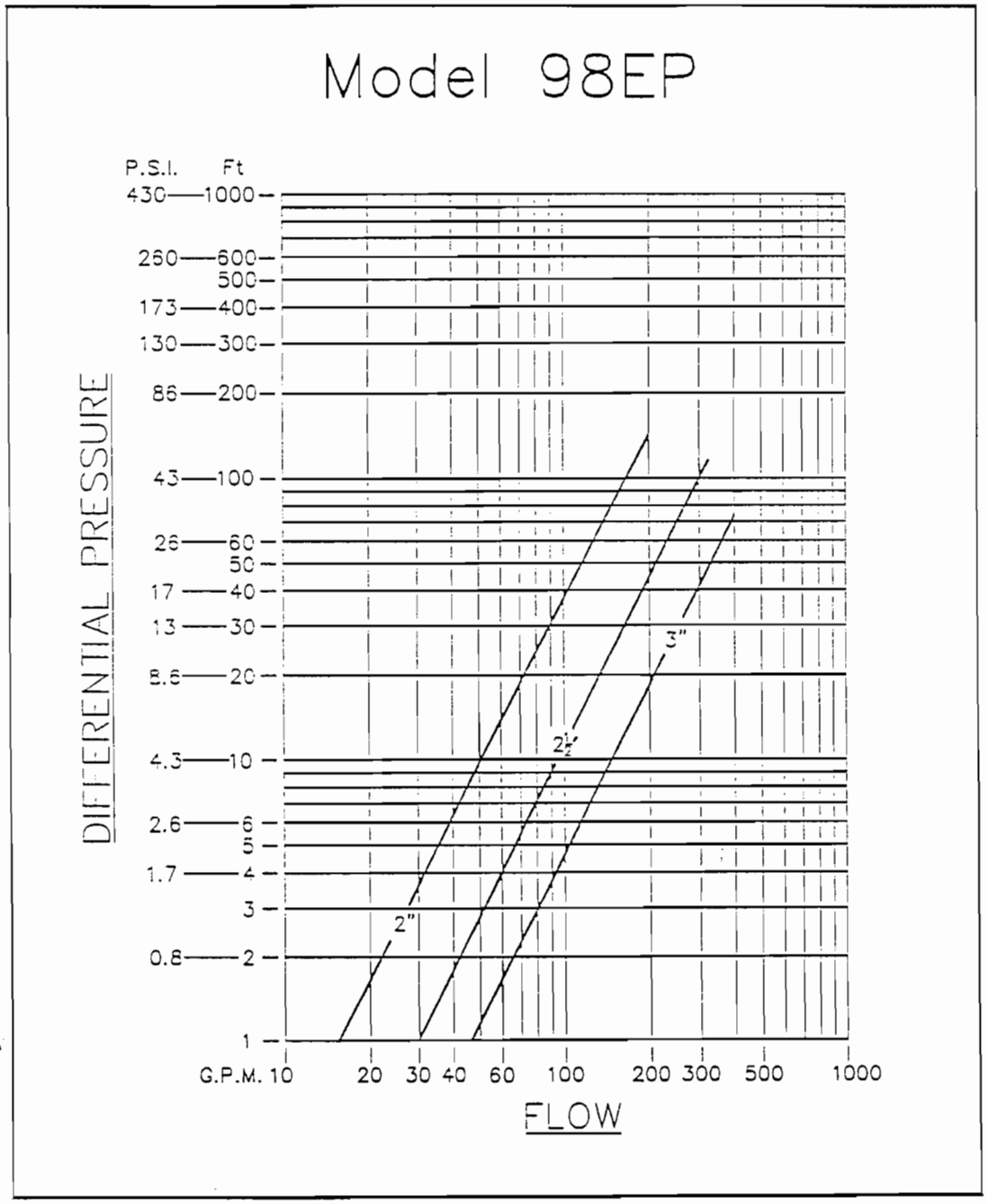

ROSS VALVE MFG. CO., INC., TROY, NY 12180 · PHONE 518/274-0961 · FAX 518/274-0210

PRESSURE REDUCING VALVE

Operation (continued) **Model Number: 98EP**

Sizing

DO NOT OVERSIZE.

Ideal Operating Position: 20% to 100% open - In this position seat erosion is at a minimum and pressure control is stable.

Maximum Flow Rates: Limit line velocity to approximately 15 fps. The valve is capable of passing larger quantities of water for short periods of time. Sustained rates at higher levels may result in high and increased valve maintenance.

Minimum Flow Rates: Intended for sustained flow rates. Valves (in good operating condition) can shut off drop tight and handle lower flows. Sustained rates at lower levels may result in high maintenance costs.

VALVE SIZE	FOR FLOWS UP TO
2"	200 GPM *
2 1/2"	325 GPM *
3"	400 GPM *

* - Estimated flows through testing at factory.

Accurate head loss curves are difficult to describe for this type of valve because as a direct acting, diaphragm operated valve, the capacity depends primarily on the drop in outlet pressure below its setting. Although pressure differential across the valve does effect the volume handled, the drop in outlet pressure below the shut-off point of the valve is of greater importance. The volume increases as the outlet pressure drops.

The capacity of this type of valve is considerably less than the pilot operated type of valve; however its simplicity and ability to operate without hunting for low flow or sudden changes in flow make it desirable for use where quick opening and closing valves are used such as industrial plants or multiple dwelling units.

Consult a Ross Representative

1. For recommendations if conditions for cavitation are encountered.
2. To recommend correct valve sizing.
3. About any specific requirements.

ROSS ADVANTAGE

1. Ross valve engineers provide in depth service based on:
   a. state of the art technology and
   b. the company's experience which dates back to 1879.
2. Globe body design provides most desirable characteristics for pressure reduction.
3. Throttling action of the piston gives a relatively unobstructed flow at maximum flow rates.
4. Valve operates totally on hydraulic pressure. No external controls are needed.
5. Valve is completely tested and adjusted in the factory.
6. Rugged construction and simple design provide superior performance where severe conditions exist.
7. All parts are built and manufactured in the USA.

Approximate Shipping Weights (lbs.)

Valve Size	2"	2 1/2"	3"
125 lb.	50	60	75
250 lb.	65	75	90
NPT	45	55	70

PRESSURE REDUCING VALVE

Specifications

Basic Valve: Pressure Reducing

The pressure reducing valve shall maintain a pre-adjusted downstream pressure regardless of changes in flow rate. Some drop in outlet pressure will occur as flow rate increases.

The pressure reducing valve shall be a direct acting type with a single seat.

The design of the valve shall be such that the inlet pressure is hydraulically balanced so that changes will not affect the outlet pressure.

The valve shall be ruggedly constructed with a size _____ inch body and 125 lb./250 lb. flanged

The valve shall be factory assembled.

Physical and Chemical Properties

The 125 lb. and 250 lb. flanged assemblies shall conform to ANSI standards for flange thickness and drilling and wall thickness of body and caps.

The valve shall be constructed of first class grey iron.

The grey iron shall be free from cold shuts, defective or spongy spots and conforming to ASTM specification A-126 Class B.

The bronze parts shall conform to ASTM specification B-62.

Test

The test before shipment may be witnessed by a representative of the Engineers for simulated field conditions.

Painting

Ferrous surfaces shall be coated with NSF Certified Epoxy in accordance with ANSI/NSF Std. 61, and conforms to AWWA D102 Inside System No. 1.

Reference

The valve will be equal in all respects to the Model **98EP Pressure Reducing Valve** as manufactured by the Ross Valve Mfg. Co., Inc., 6 Oakwood Ave., Troy, NY 12181.

NOTE: The Ross Valve Mfg. Co., Inc. reserves the right to modify valve construction which will result in equal or superior performance to existing designs. These modifications may be made at any time and at the sole discretion of the manufacturer.

Factory: Telephone (518) 274-0961
Fax (518) 274-0210

Pota-Pox (Fast Cure) SERIES FC20

PRODUCT PROFILE

GENERIC DESCRIPTION Polyamide Epoxy

COMMON USAGE Fast-curing protective coating for use in steel and concrete potable water storage facilities. Contact your Tnemec representative for other systems and additional information on potential uses.

COLORS **Primer:** 1211 Red, 1255 Beige. **Topcoat:** AA90 White, WH02 Tank White, GB03 Delft Blue. **Note:** Epoxies chalk with extended exposure to sunlight. Lack of ventilation, incomplete mixing, miscatalyzation or the use of heaters that emit carbon dioxide and carbon monoxide during application and initial stages of curing may cause yellowing to occur.

SPECIAL QUALIFICATIONS Certified by **NSF International** in accordance with **ANSI/NSF Std. 61** for use on the interior of potable water storage tanks and reservoirs of 1,000 gallons (3785 L) capacity or greater. Conforms to **AWWA D 102 Inside Systems No. 1 and No. 2.** Contact your Tnemec representative for approved systems and additional information on potential uses.

PERFORMANCE CRITERIA Extensive test data available. Contact your Tnemec representative for specific test results.

COATING SYSTEM

PRIMERS Self-priming, 20, 91-H_20. **Note:** 91-H_20 is ANSI/NSF Std. 61 certified by UL as a primer for Series FC20. Refer to the 91-H_20 product data sheet for additional information.

TOPCOATS **Interior:** Series 20, FC20, N140, 264, 265
Exterior: Series 20, FC20, N27, 66, 69, 73, 74, 75, 104, N140, 161, 175
Refer to COLORS on applicable topcoat data sheets for additional information.

SURFACE PREPARATION

STEEL **Immersion Service:** SSPC-SP10 Near-White Blast Cleaning
Non-Immersion Service: SSPC-SP6 Commercial Blast Cleaning

PRIMED SURFACES **Immersion Service:** Scarify the Series FC20 prime coat surface by brush-blasting with fine abrasive before topcoating if it has been exposed to sunlight for 60 days or longer.

CAST/DUCTILE IRON Contact your Tnemec representative or Tnemec Technical Services.

CONCRETE Allow new concrete to cure for 28 days. Brush-off blast. Holes, pits, voids and cracks should be filled with 63-1500 Filler and Surfacer (ANSI/NSF Std. 61 certified).

ALL SURFACES Must be clean, dry and free of oil, grease and other contaminants.

TECHNICAL DATA

VOLUME SOLIDS* 58.0 ± 2.0% (mixed)

RECOMMENDED DFT **Primer:** 3.0 to 5.0 mils (75 to 125 microns) per coat.
Intermediate, Topcoat: 4.0 to 6.0 mils (100 to 150 microns) per coat.
Note: Number of coats and thickness requirements will vary with substrate, application method and exposure. Contact your Tnemec representative.

CURING TIME

Temperature	To Touch	To Handle	To Recoat	Immersion
75°F (24°C)	1 hour	2 hours	3 hours	6 days
65°F (18°C)	2 hours	4 hours	5-6 hours	8 days
55°F (13°C)	3-4 hours	6-8 hours	10-12 hours	12 days
45°F (7°C)	6-7 hours	12-14 hours	16-18 hours	20 days
35°F (2°C)	8-10 hours	16-18 hours	20-22 hours	25 days

Curing time varies with surface temperature, air movement, humidity and film thickness.

VOLATILE ORGANIC COMPOUNDS

Unthinned	Thinned 10%
2.90-2.97 lbs/gallon (347-356 grams/litre)	3.26-3.32 lbs/gallon (391-398 grams/litre)

THEORETICAL COVERAGE* 930 mil sq ft/gal (22.8 m^2/L at 25 microns). See APPLICATION for coverage rates.

NUMBER OF COMPONENTS Two: Part A and Part B

PACKAGING 5 gallon (18.9L) pails and 1 gallon (3.79L) cans — Order in multiples of 2.

NET WEIGHT PER GALLON* 12.50 ± 0.25 lbs (5.7 ± .11 kg) (mixed)

Published technical data and instructions are subject to change without notice. The online catalog at www.tnemec.com should be referenced for the most current technical data and instructions or you may contact your Tnemec representative for current technical data and instructions.
© July 1999, by Tnemec Company, Inc.

SERIES FC20 Pota-Pox (Fast Cure)

TECHNICAL DATA continued

STORAGE TEMPERATURE	Minimum 20°F (-7°C)	Maximum 110°F (43°C)
TEMPERATURE RESISTANCE	(Dry) Continuous 250°F (121°C)	Intermittent 275°F (135°C)
SHELF LIFE	24 months at recommended storage temperature.	
FLASH POINT - SETA	Part A: 82°F (28°C)	Part B: 64°F (18°C)
HEALTH & SAFETY	Paint products contain chemical ingredients which are considered hazardous. Read container label warning and Material Safety Data Sheet for important health and safety information prior to the use of this product. **Keep out of the reach of children.**	

APPLICATION

COVERAGE RATES*

	Primer			Intermediate / Topcoat		
	Dry Mils (Microns)	Wet Mils (Microns)	Sq Ft/Gal (m^2/Gal)	Dry Mils (Microns)	Wet Mils (Microns)	Sq Ft/Gal (m^2/Gal)
Suggested (1)	4.0 (100)	7.0 (180)	232 (21.6)	5.0 (125)	8.5 (215)	186 (17.3)
Minimum	3.0 (75)	5.0 (125)	310 (28.8)	4.0 (100)	7.0 (180)	232 (21.6)
Maximum	5.0 (125)	8.5 (215)	186 (17.3)	6.0 (150)	10.5 (265)	155 (14.4)

(1) **Note:** Roller or brush application requires two or more coats to obtain recommended film thickness. Allow for overspray and surface irregularities. Film thickness is rounded to the nearest 0.5 mil or 5 microns. Application of coating below minimum or above maximum recommended dry film thicknesses may adversely affect coating performance.

MIXING — Power mix contents of each container, making sure no pigment remains on the bottom. Pour a measured amount of Part B into a clean container large enough to hold both components. Add an equal volume of Part A to Part B while under agitation. Continue agitation until the two components are thoroughly mixed. Do not use mixed material beyond pot life limits. **Note:** Both components should be above 50°F (10°C) prior to mixing. For application to surfaces between 35°F to 50°F (2°C to 10°C), allow mixed material to stand thirty (30) minutes and restir before using. For optimum application properties, blended components should be above 60°F (16°C).

POT LIFE — 16 hours at 35°F (2°C) | 2 hours at 77°F (25°C) | 1/2 hour at 100°F (38°C)

THINNING — Use No. 4 Thinner. For air spray, thin up to 10% or ¼ pint (380 mL) per gallon. For airless spray, roller or brush, thin up to 5% or ¼ pint (190 mL) per gallon. **Caution:** Series FC20 NSF certification is based on thinning with No. 4 Thinner. Use of any other thinner voids ANSI/NSF Std. 61 certification.

SURFACE TEMPERATURE — Minimum 35°F (2°C) | Maximum 135°F (57°C) | The surface should be dry and at least 5°F (3°C) above the dew point. Coating won't cure below minimum surface temperature.

APPLICATION EQUIPMENT

Air Spray

Gun	Fluid Tip	Air Cap	Air Hose ID	Mat'l Hose ID	Atomizing Pressure	Pot Pressure
DeVilbiss MBC or JGA	E	765 or 78	5/16" or 3/8" (7.9 or 9.5 mm)	3/8" or 1/2" (9.5 or 12.7 mm)	75-100 psi (5.2-6.9 bar)	10-20 psi (0.7-1.4 bar)

Low temperatures or longer hoses require higher pot pressure.

Airless Spray

Tip Orifice	Atomizing Pressure	Mat'l Hose ID	Manifold Filter
0.015"-0.019" (380-485 microns)	1800-3000 psi (124-207 bar)	1/4" or 3/8" (6.4 or 9.5 mm)	60 mesh (250 microns)

Use appropriate tip/atomizing pressure for equipment, applicator technique and weather conditions.
Plural Component Spray: Contact your Tnemec representative or Tnemec Technical Services.
Roller: Roller application optional when environmental restrictions do not allow spraying. Use 3/8" or 1/2" (9.5 mm or 12.7 mm) synthetic nap covers.
Brush: Recommended for small areas only. Use high quality natural or synthetic bristle brushes.

CLEANUP — Flush and clean all equipment immediately after use with the recommended thinner or MEK.

*Values may vary with color.

WARRANTY & LIMITATION OF SELLER'S LIABILITY: Tnemec Company, Inc. warrants only that its coatings represented herein meet the formulation standards of Tnemec Company, Inc.
THE WARRANTY DESCRIBED IN THE ABOVE PARAGRAPH SHALL BE IN LIEU OF ANY OTHER WARRANTY, EXPRESSED OR IMPLIED, INCLUDING BUT NOT LIMITED TO, ANY IMPLIED WARRANTY OF MERCHANTABILITY OR FITNESS FOR A PARTICULAR PURPOSE. THERE ARE NO WARRANTIES THAT EXTEND BEYOND THE DESCRIPTION ON THE FACE HEREOF. The buyer's sole and exclusive remedy against Tnemec Company, Inc. shall be for replacement of the product in the event a defective condition of the product should be found to exist and the exclusive remedy shall not have failed its essential purpose as long as Tnemec is willing to provide comparable replacement product to the buyer. NO OTHER REMEDY (INCLUDING, BUT NOT LIMITED TO, INCIDENTAL OR CONSEQUENTIAL DAMAGES FOR LOST PROFITS, LOST SALES, INJURY TO PERSON OR PROPERTY, ENVIRONMENTAL INJURIES OR ANY OTHER INCIDENTAL OR CONSEQUENTIAL LOSS) SHALL BE AVAILABLE TO THE BUYER. Technical and application information herein is provided for the purpose of establishing a general profile of the coating and proper coating application procedures. Test performance results were obtained in a controlled environment and Tnemec Company makes no claim that these tests or any other tests, accurately represent all environments. As application, environmental and design factors can vary significantly, due care should be exercised in the selection and use of the coating. FOR INDUSTRIAL USE ONLY.

Support Services – Ross Valve provides personal service in every phase of development, installation, and maintenance. Services include:

DEDICATED SUPPORT LINES

- Sales engineers available Monday through Friday, 6 a.m. to 5:30 p.m. to help you with any questions — (518) 274-0961
- Fax machine — (518) 274-0210
- After hours phone/fax line — (518) 279-4373
- E-Mail - sales@rossvalve.com

Service after sale — We are always available to provide answers to any questions, or provide technical assistance. No sale is ever "final" — we continue to work with you, until you are 100% satisfied with your valve.

TRAINING

Factory Training — Ross Valve believes that our customers should know as much as possible about our products. That is why we periodically host Customer Training seminars at our facility in Troy, New York. Here, our customers learn the workings of the valves, how to correctly maintain them, and how they are manufactured.

In addition, Ross representatives are often in the field giving product seminars for your convenience.

WARRANTY

All valves and materials are guaranteed free from defects for 1 year from the date shipped.

FIELD SERVICE

When a repair, upgrade, or modification is required for an existing Ross Valve, factory-trained Ross Service Technicians offer the best service available, including:

- On-site/hands-on training for your staff.
- Trouble shooting expertise for our valves and your entire system.
- Technical assistance for start-up or continuing training.
- Fully inventoried service vehicles to allow replacement of necessary parts.
- Ability to return older valves to "like-new" condition.
- Confined Space/OSHA Trained.

MAINTENANCE

Ross Valves are economically rebuilt. Every internal part is replaceable through the top of the valve, without removing it from the line. All seals and packings are replaceable, which contributes to the valve's longevity.

Ross Valve stocks a wide variety of repair parts which can be received by the customer as early as the next day. In-house computer links track packages to ensure timely delivery.

Detailed historical record keeping gives us a full report of all maintenance or upgrades that have been made on each valve. This allows us to evaluate performance in the past and maximize performance in the future.

ROSS VALVE Mfg. Co. Inc.

6 Oakwood Ave., P.O. Box 595, Troy, NY 12181, USA

Phone: (518) 274-0961 Fax: (518) 274-0210
After Hours: (518) 279-4373 E-Mail: sales@rossvalve.com
Website: www.rossvalve.com

Milherst Construction, Inc.
P.O. Box 631
Getzville, New York 14068

Phone (716) 688-9098
Fax (716) 688-9562

Submittal No.40

Lehigh Valley RR Derailment Site

Owner NYS Department of Environmental Conservation
Bureau of Construction Services, 12th Floor
625 Broadway
Albany, NY 12233-7013

Contractor Milherst Construction, Inc

Date April 3, 2002

Item: Pressure Reducing Valves 6"&8" For use in Pressure Reducing Vault A & B

Specification:

Section: 15100

Page No.: 15100-4

Para. No.: 2.04

Drawing No.:

Location: Vaults

Milherst Construction, Inc. certifies that all quantities, dimensions, specified performance criteria, installation requirements, materials, catalog numbers, and similar data with respect thereto have been reviewed or that each Shop Drawing or sample has been coordinated with other Shop Drawings and samples and with the requirements of the Work and Contract Documents.

By: Charles F. Kubiniec

Charles F. Kubiniec
Project Manager

1. Vault "A"
   Inlet Pressure 105 psi
   Outlet Pressure 50 psi

2. Vault "B"
   Inlet Pressure 110 psi
   outlet Pressure 30 psi

3. Must have two coat paint system

~~APPROVED~~

☒ **APPROVED AS CORRECTED**
~~(Resubmit final copy for file).~~

☐ **REVISE AND RESUBMIT BEFORE PROCEEDING**

☐ **NOT APPROVED**

Review only for conformance with the design concept of the project and with information given in the Contract Documents. The Contractor is responsible for: verifying that dimensions are confirmed and correlated at the job site; obtaining information that pertains to the fabrication processes or to techniques of construction, and: coordinating the work of all subcontractors.
STEARNS & WHELER, LLC Engineers and Scientists

By TJF Date 4/10/02

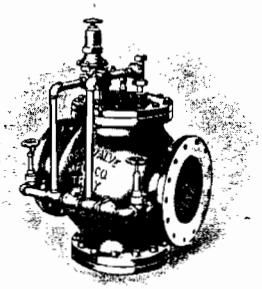

ESTABLISHED 1879

ROSS VALVE MFG. CO., INC.

PIONEERS IN THE DEVELOPMENT OF AUTOMATIC PRESSURE CONTROL SPECIALTIES

6 OAKWOOD AVENUE • POST OFFICE BOX 595 • TROY, NEW YORK 12181

TEL 518 274-0961 • FAX 518 274-0210 • www.rossvalve.com

SUBMITTAL

ONE (1) - ROSS 6" GLOBE MODEL 40WR FIGURE 1
ONE (1) - ROSS 8" GLOBE MODEL 40WR FIGURE 1
ONE (1) - ROSS 8" GLOBE MODEL 40WR-LD FIGURE 1
PRESSURE REDUCING VALVES

OWNER / PROJECT

NEW YORK STATE ENVIRONMENTAL CONSERVATION
ALBANY, NY

LEHIGH VALLEY RR DERAILMENT WATERMAIN PROJECT D004328
PRESSURE REDUCING VALVE VAULTS "A" & "B"
SPECIFICATION SECTION 15100-2.04

CONSULTING ENGINEERS

STEARNS & WHELER LLC
ONE REMINGTON PARK DRIVE
CAZENOVIA, NY 13035

PHONE - 315/655-8161
FAX - 315/655-4180

SUPPLIER

M.J. PIPE & SUPPLY
609 BUFFALO ROAD
ROCHESTER, NY 14611

CONTACT - MIKE DOOLEY
PHONE - 716/235-6990
FAX - 716/235-6156

ROSS REPRESENTATIVE

J.L. MOORE, INC.
659 OAKWOOD AVENUE
EAST AURORA, NY 14052

CONTACT - DAVE MOORE
PHONE - 716/655-3433
FAX - 716/655-4440

MARCH 19, 2002

PROJECT D9004328 LEHIGH VALLEY RR DERAILMENT WATERMAIN PRESSURE REDUCING VALVE VAULT "A"

ONE (1) - ROSS 6" GLOBE MODEL 40WR FIGURE 1

The Ross Model 40WR Figure 1 pressure reducing valves shall be hydrostatically tested for body integrity and tight seating at the factory prior to shipment. Field operating conditions are simulated, and the controls are adjusted for proper operation.

In order to design and test the valves under operating conditions similar to those in the field, please complete / confirm the following:

Inlet (supply) pressure ___-___ psi

Outlet (downstream) pressure ___-___ psi

Valve shall be furnished in accordance with Drawing 40WR-SS3-TEF dated 7-25-01, including:

- ANSI B16.1 Class 125 cast iron globe body, flanges & caps

- Stainless steel components
  - Seat disc (8)
  - Bottom cap cylinder (23)
  - Seat ring (24) & fasteners (22)

- Teflon coated component
  - Main bushing (14)

- Ross Model 40WR hydraulic pressure reducing pilot (19)

  Initial factory setting 50 psi

- Red brass fittings & rigid control piping, including
  - Tapped port with gauge cock on inlet & outlet (gauges by others)

Note: The Ross globe body valve can be installed in any position. In order to properly design the valve and orient the controls, please note the physical layout of its installation.

Valve inlet & outlet → Flow	[x] * Horizontal	**or**	[ ] Vertical up
		or	[ ] Vertical down
Valve piston axis	[x] * Vertical	**or**	[ ] Horizontal

* Standard installation

PROJECT D9004328 LEHIGH VALLEY RR DERAILMENT WATERMAIN PRESSURE REDUCING VALVE VAULT "B"

ONE (1) - ROSS 8" GLOBE MODEL 40WR FIGURE 1
ONE (1) - ROSS 8" GLOBE MODEL 40WR-LD FIGURE 1

The Ross Model 40WR & 40WR-LD Figure 1 pressure reducing valves shall be hydrostatically tested for body integrity and tight seating at the factory prior to shipment. Field operating conditions are simulated, and the controls are adjusted for proper operation.

In order to design and test the valves under operating conditions similar to those in the field, please complete / confirm the following:

Valve Model in Series	**40WR**	**40WR-LD**
Inlet (supply) pressure	___-___ psi	___-___ psi
Outlet (downstream) pressure	___-___ psi	___-___ psi

Model 40WR valve shall be furnished in accordance with Drawing 40WR-SS3-TEF dated 7-25-01 & Model 40WR-LD valve shall be furnished in accordance with Drawing 40WR-LD dated 3-10-00, including:

· ANSI B16.1 Class 125 cast iron globe body, flanges & caps		
Expanded operating chamber (K)		X
· Stainless steel components		
Seat disc (8)	X	X
Bottom cap cylinder (23)	X	
Seat ring (24) & fasteners (22)	X	X
· Teflon coated component		
Main bushing (14)	X	X
· Ross Model 40WR hydraulic pressure reducing pilot (19)		
Initial factory setting	30 psi	30 psi
· Red brass fittings & rigid control piping, including		
Tapped port with gauge cock on inlet & outlet (gauges by others)		

Note: The Ross globe body valve can be installed in any position. In order to properly design the valve and orient the controls, please note the physical layout of their installation.

Valve inlet & outlet - Flow	[x] * Horizontal	**or**	[ ] Vertical up
		or	[ ] Vertical down
Valve piston axis	[x] * Vertical	**or**	[ ] Horizontal

* Standard installation

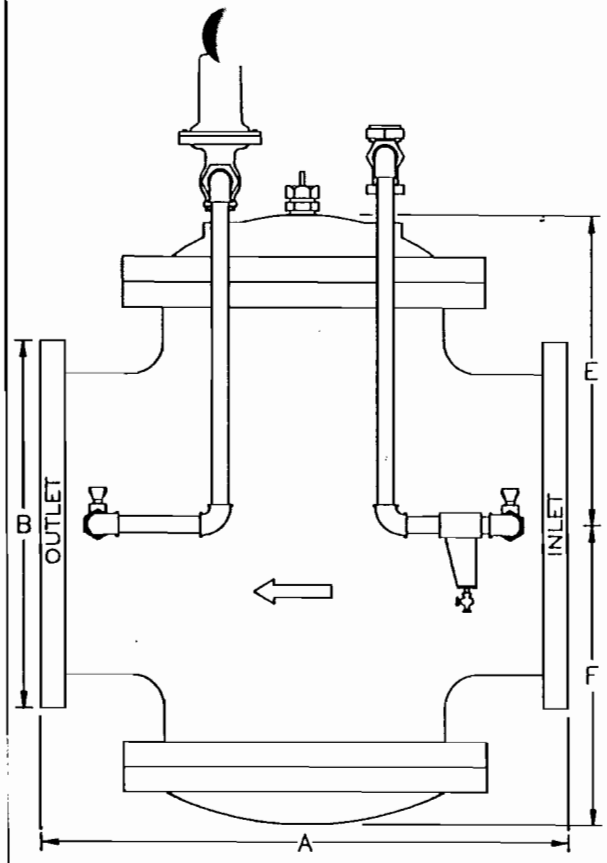

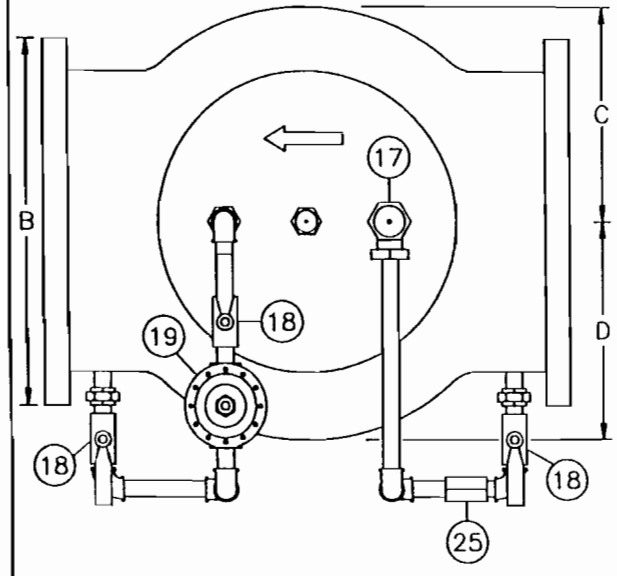

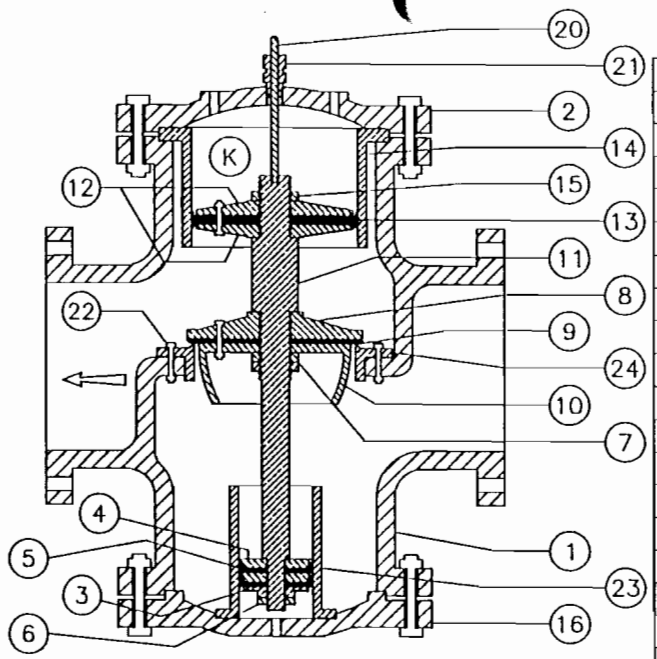

VALVE SIZE (IN)	ANSI B16.1 CLASS	SHIPPING WEIGHT (LBS)	DIMENSIONS (INCHES) A	B	C&D	E&F
4	125 250	235 275	14 14-5/8	9 10	4-3/4 4-3/4	7 7
6	125 250	375 430	17-3/4 17-3/4	11 12-1/2	6-5/8 6-5/8	9 9
8	125 250	690 750	24 24-13/16	13-1/2 15	8-3/4 8-3/4	12-1/2 12-1/2
10	125 250	920 1000	24-7/8 26-1/4	16 17-1/2	10 10	14-1/4 14-1/4
12	125 250	1375 1475	30 31-1/2	19 20-1/2	12 12	15-1/2 15-1/2
14	125 250	1770 1850	34-1/4 35-3/4	21 23	14 14	18 18
16	125 250	2400 2600	37-7/8 39-1/4	23-1/2 25-1/2	15 15	21-1/2 21-1/2
18	125 250	3300 3500	41-7/8 41-7/8	25 28	18-3/8 18-3/8	24 24
20	125 250	3550 3800	42-3/8 42-3/8	27-1/2 30-1/2	18-3/8 18-3/8	24 24
24	125 250	5200 5500	47 47	32 36	20 20	25 25
30	125 250	9800 10800	63-3/4 65-1/16	38-3/4 43	26-1/4 26-1/4	34 34
36	125 250	11800 12800	65 65	46 50	26-1/4 26-1/4	34 34

PART	DESCRIPTION	QTY.	MATERIAL
1	VALVE SHELL	1	CAST IRON
2	TOP CAP	1	CAST IRON
3	BOTTOM STEM GUIDE NUT	1	BRONZE
4	BOTTOM CUP FOLLOWERS (SET OF 2)	1	BRONZE
5	PISTON CUP PACKING	2	LEATHER
6	BOTTOM STEM LOCK NUT	1	BRONZE
7	STEM NUT	1	BRONZE
8	SEAT DISC	1	~~BRONZE~~
9	SEAT PACKING	1	POLYURETHANE
10	SEAT PACKING SUPPORT	1	BRONZE
11	STEM	1	BRONZE
12	MAIN CUP PLATES (SET OF 2)	1	BRONZE
13	MAIN CUP PACKING	2	LEATHER
14	MAIN BUSHING	1	BRONZE/TEFLON
15	TOP STEM NUT	1	BRONZE
16	BOTTOM CAP	1	CAST IRON
17	NEEDLE VALVE	1	BRONZE
18	ISOLATION VALVE	3	BRONZE
19	PILOT VALVE – PRESSURE REDUCING	1	BRONZE
20	INDICATOR ROD	1	BRONZE
21	INDICATOR STUFFING BOX	1	BRONZE
22	BOLTS & NUTS (SEAT RING)	VARY	STAINLESS STEEL
23	BOTTOM CAP CYLINDER	1	STAINLESS STEEL
24	SEAT RING	1	STAINLESS STEEL
25	STRAINER	1	BRONZE/STAINLESS
	BOLTS & NUTS (TOP & BOTTOM CAP)	VARY	STEEL
	BOLTS & NUTS (CUP PLATES)	VARY	BRONZE
	BOLTS (BOTTOM CAP CYLINDER)	VARY	BRONZE
	INDICATOR ROD PACKING (SET)	1	TEFLON
	COVER & MAIN BUSHING GASKETS	3	COMPOSITION
	STEM GASKETS	3	COMPOSITION

ROSS VALVE Mfg. Co., Inc.
6 OAKWOOD AVENUE - TROY, NEW YORK, 12180 - TEL. (518) 274 0961
POST OFFICE BOX 595 - TROY, NEW YORK, 12181 - FAX (518) 274 0210
WEBSITE: www.rossvalve.com - E-MAIL: sales@rossvalve.com

DRAWING 40WR-SS3-TEF		DATE 7-25-01 RJC
GLOBE BODY 4" – 36"	NO SCALE	FIGURE 1

Model 40WR
PRESSURE REDUCING VALVE

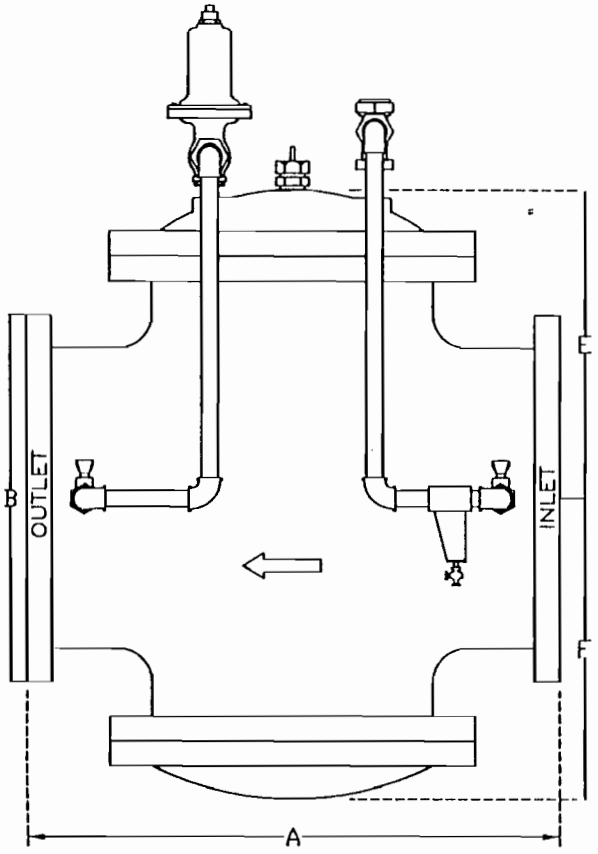

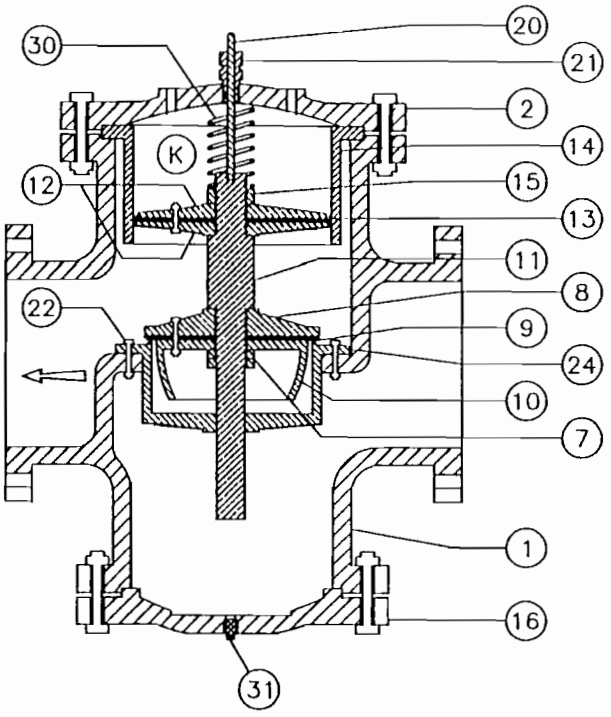

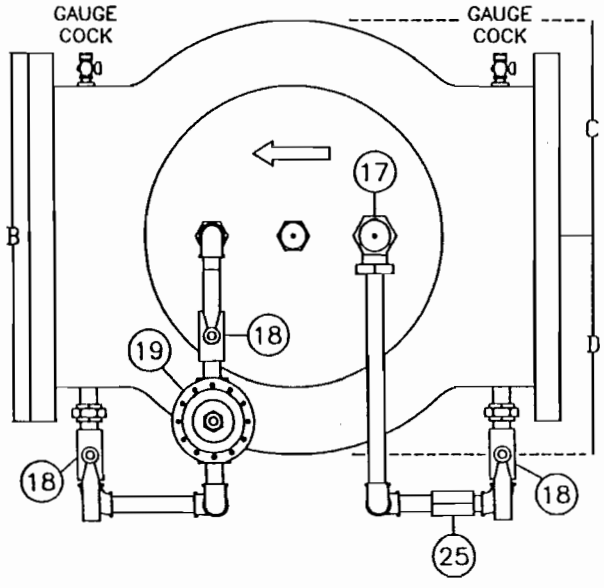

VALVE SIZE (IN)	ANSI B16.1 CLASS	SHIPPING WEIGHT (LBS)	DIMENSIONS (INCHES) A	B	C&D	E&F
4	125 250	235 275	14 14-5/8	9 10	4-3/4 4-3/4	7 7
6	125 250	375 430	17-3/4 17-3/4	11 12-1/2	6-5/8 6-5/8	9 9
8	125 250	690 750	24 24-13/16	13-1/2 15	8-3/4 8-3/4	12-1/2 12-1/2
10	125 250	920 1000	24-7/8 26-1/4	16 17-1/2	10 10	14-1/4 14-1/4
12	125 250	1375 1475	30 31-1/2	19 20-1/2	12 12	15-1/2 15-1/2
14	125 250	1770 1850	34-1/4 35-3/4	21 23	14 14	18 18
16	125 250	2400 2600	37-7/8 39-1/4	23-1/2 25-1/2	15 15	21-1/2 21-1/2
18	125 250	3300 3500	41-7/8 41-7/8	25 28	18-3/8 18-3/8	24 24
20	125 250	3550 3800	42-3/8 42-3/8	27-1/2 30-1/2	18-3/8 18-3/8	24 24
24	125 250	5200 5500	47 47	32 36	20 20	25 25
30	125 250	9800 10800	63-3/4 65-1/16	38-3/4 43	26-1/4 26-1/4	34 34
36	125 250	11800 12800	65 65	46 50	26-1/4 26-1/4	34 34

PART	DESCRIPTION	QTY.	MATERIAL
1	VALVE SHELL	1	CAST IRON
2	TOP CAP	1	CAST IRON
7	STEM NUT	1	BRONZE
8	SEAT DISC	1	~~BRONZE~~
9	SEAT PACKING	1	POLYURETHANE
10	SEAT PACKING SUPPORT	1	BRONZE
11	STEM	1	BRONZE
12	MAIN CUP PLATES (SET OF 2)	1	BRONZE
13	MAIN CUP PACKING	1	LEATHER
14	MAIN BUSHING	1	BRONZE/TEFLON
15	TOP STEM NUT	1	BRONZE
16	BOTTOM CAP	1	CAST IRON
17	NEEDLE VALVE	1	BRONZE
18	ISOLATION VALVE	3	BRONZE
19	PILOT VALVE – PRESSURE REDUCING	1	BRONZE
20	INDICATOR ROD	1	BRONZE
21	INDICATOR STUFFING BOX	1	BRONZE
22	BOLTS & NUTS (SEAT RING)	VARY	~~BRONZE~~
24	SEAT RING & STEM GUIDE	1	~~BRONZE~~
25	STRAINER	1	BRONZE/STAINLESS
30	SPRING	1	STAINLESS
31	PLUG	1	CAST IRON
	BOLTS & NUTS (TOP & BOTTOM CAP)	VARY	STEEL
	BOLTS & NUTS (CUP PLATES)	VARY	BRONZE
	INDICATOR ROD PACKING (SET)	1	TEFLON
	COVER & MAIN BUSHING GASKETS	3	COMPOSITION
	STEM GASKETS	2	COMPOSITION
K	EXPANDED OPERATING CHAMBER		

ROSS VALVE Mfg. Co., Inc.
6 OAKWOOD AVENUE - TROY, NEW YORK, 12180 - TEL. (518) 274 0961
POST OFFICE BOX 595 - TROY, NEW YORK, 12181 - FAX (518) 274 0210
WEBSITE: www.rossvalve.com - E-MAIL: sales@rossvalve.com

DRAWING 40WR-LD		DATE 3/10/00 RJC
GLOBE BODY 4" – 36"	NO SCALE	FIGURE 1

Model 40WR-LD
PRESSURE REDUCING VALVE
WITH LOW DIFFERENTIAL DESIGN

FLANGE DIMENSIONS (INCHES)
ANSI B16.1 CLASS 125 FLANGES

PIPE SIZE (I.D.)	FLANGE DIAMETER (O.D.)	FLANGE THICKNESS (T)	BOLT CIRCLE DIAMETER (B.C.)	NUMBER OF BOLTS (N)	BOLT DIAMETER (B.D.)	BOLT HOLE DIAMETER (B.H.)
1	4-1/4	7/16	3-1/8	4	1/2	5/8
1-1/4	4-5/8	1/2	3-1/2	4	1/2	5/8
1-1/2	5	9/16	3-7/8	4	1/2	5/8
2	6	5/8	4-3/4	4	5/8	3/4
2-1/2	7	11/16	5-1/2	4	5/8	3/4
3	7-1/2	3/4	6	4	5/8	3/4
4	9	15/16	7-1/2	8	5/8	3/4
6	11	1	9-1/2	8	3/4	7/8
8	13-1/2	1-1/8	11-3/4	8	3/4	7/8
10	16	1-3/16	14-1/4	12	7/8	1
12	19	1-1/4	17	12	7/8	1
14	21	1-3/8	18-3/4	12	1	1-1/8
16	23-1/2	1-7/16	21-1/4	16	1	1-1/8
18	25	1-9/16	22-3/4	16	1-1/8	1-1/4
20	27-1/2	1-11/16	25	20	1-1/8	1-1/4
24	32	1-7/8	29-1/2	20	1-1/4	1-3/8
30	38-3/4	2-1/8	36	28	1-1/4	1-3/8
36	46	2-3/8	42-3/4	32	1-1/2	1-5/8

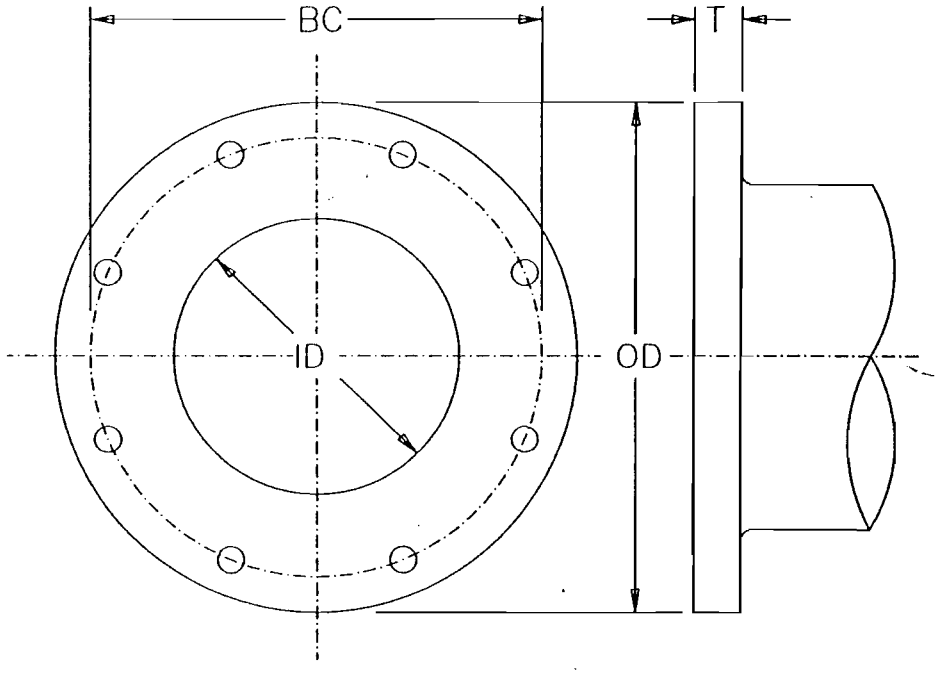

ROSS VALVE Mfg. Co., Inc.
6 OAKWOOD AVENUE – P.O. BOX 595 – TROY, NEW YORK, 12181 – TEL. (518) 274 0961

NO SCALE	DRAWING ANSI FLANGES
DATE 2-25-97	REVISED 9-30-99 S.M

FLANGE DIMENSIONS
ANSI B16.1 CLASS 125
SIZES 1" TO 36"

FILE: FLANGE125

DIMENSIONS

Globe Body Minimum Clearances — Piston Valve Sizes: 4" - 36"

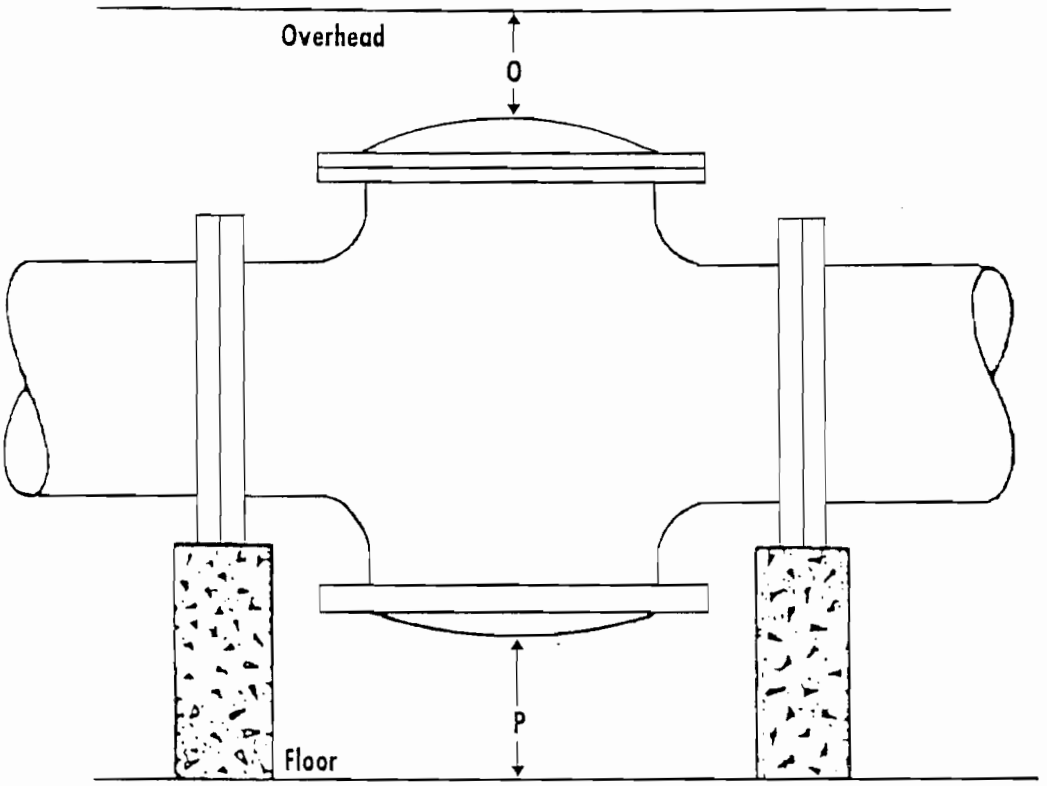

Size (Inches)	4"	6"	8"	10"	12"	14"	16"	18"	20"	24"	30"	36"
O	14	16	18	21	23	28	28	33	33	36	43	46
P	4 1/2	5 1/2	6 1/2	1	1	1	1	1	1	1	1	1

Note

1. Dimension "O" is clearance for removal of the top cap and piston for repacking the main valve. Additional working space for the convenience of the service man should be considered above as well as around the valve.
2. Dimension "P" as listed is the desirable clearance under the valve for removal of the STANDARD bottom cap. This dimension may be reduced to 1 inch for all valves on special applications.

Note

A. **Do not obstruct vent hole located at the center of the bottom cap.**
B. Consideration should be given for installation of valves 14" or larger under manhole in the roof of the valve vault or for additional clearance above the valve since a mechanical hoist will probably be required for removal of the piston. An eye bolt or hook cast in the cover slab over the center of the valve is useful.
C. If clearance under the valve is limited, dimensions "O" and "P" can be modified. Consult the factory concerning special applications.

DIMENSIONS

Piston Valve Sizes: 4" - 36" — Standard External Controls

For Model Number

40WR - Pressure Reducing

	125 ANSI	250 ANSI
H	3" - 6"	3" - 6"
I	12"	12"

"X" = Standard Piping
"Y" = Alternative to "X".
Mainly for larger valves.

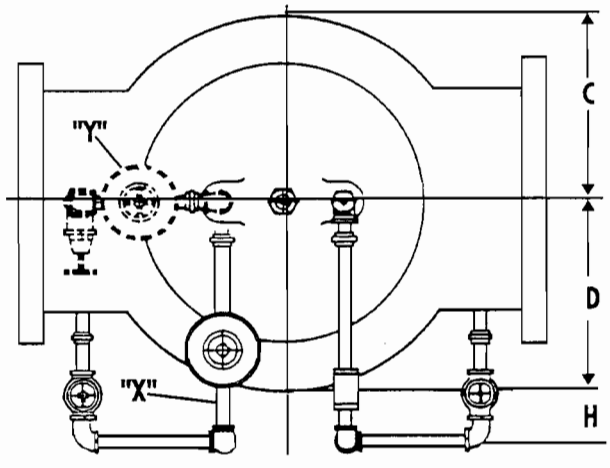

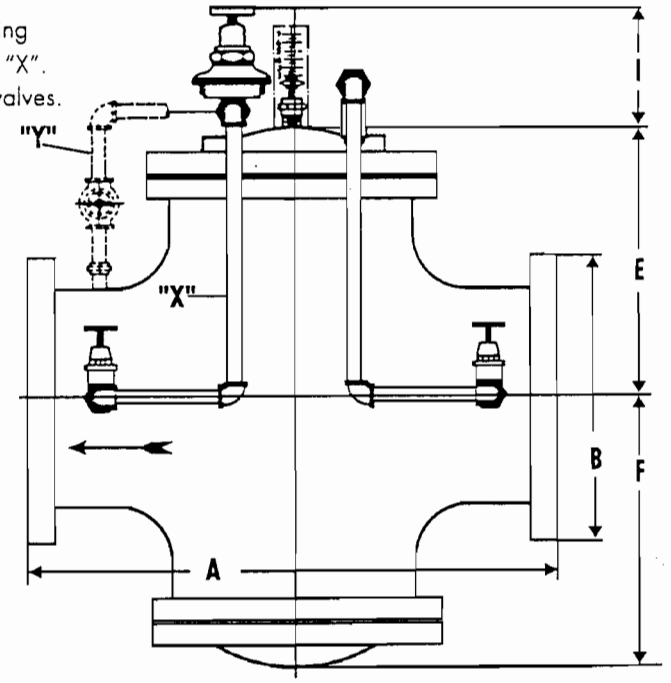

Note

1. Dimension "I" includes maximum stem travel.
2. Dimensions "A" - "F" are on page EN-8.

Factory: Telephone (518) 274-0961; Fax (518) 274-0210

PRESSURE REDUCING VALVE

Purpose: Control outlet pressure **Model Number: 40WR**

Sizes: 4" - 36"
Type: Throttling
Primarily Controlled By:
Hydraulic pressure
Located: In line
Purpose: To prevent outlet pressure from exceeding a preset maximum level
Inlet Pressure: Maximum: 300 psi
Inlet Pressure: Minimum: 5 psi
Construction: Cast iron (semi-steel) body with bronze trim
Control Devices:
Strainer: Model 5F-2
Valves:
Needle
Pilot: Pressure Reducing: Model 40WR With internal sensing port or equipped to receive a separate sensing line. (Can also be added to other basic valves as a customized feature.)
See overall parts lists and specific parts information for complete details.

Options

1. Angle body design (90 degree)
2. Cast steel or ductile iron body and stainless steel trim
3. Teflon coated cylinders

Customized Features

Any one or a selection of features can be added to the basic pressure reducing valve.

Code

- **CI** - Check Feature (Internal)
- **CE** - Check Feature (Cushioned)
- **R** - Reverse Flow Feature
- **PR** - Dual Pilot: Second Pressure Reducing Pilot Valve
- **BP** - Back Pressure Sustaining Pilot Valve
- **SC** or **SO** - Solenoid Pilot Valve: 2 Way
- **SG** or **SF** - Solenoid Pilot Valve: 3 Way
- **M** - Reversible Electric Motor
- **ES** - Higher Efficiency Strainer
- **LS** - Limit Switch

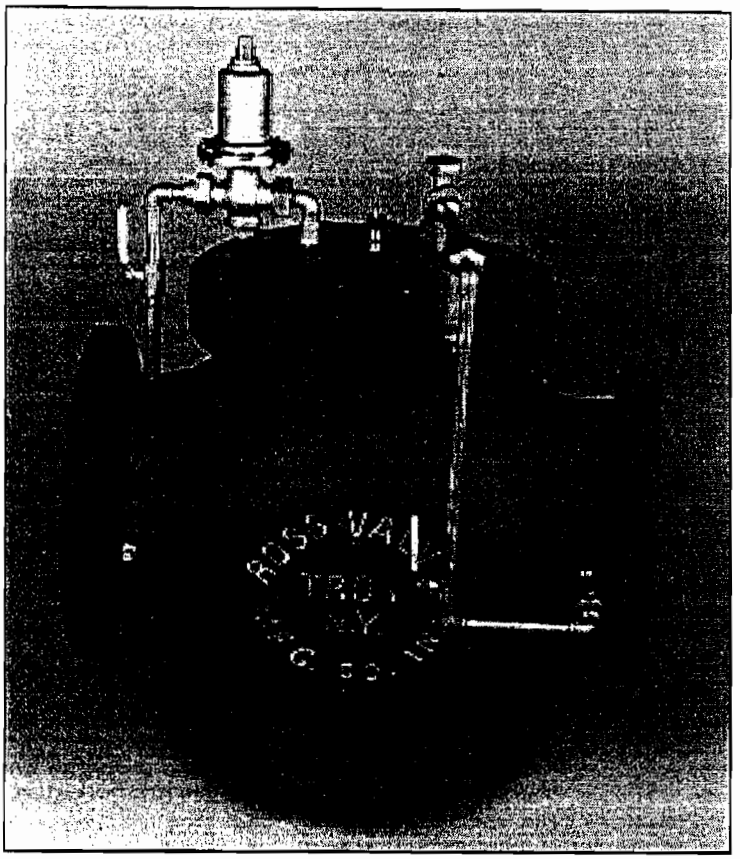

Ross engineers customize the basic **40WR** to accommodate individual needs.

Basic Application

Control systems where the supply (inlet) pressure is higher than the discharge pressure.

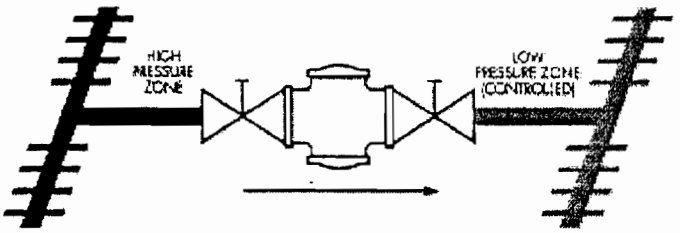

If: Supply pressure is higher than user capacity
Ross Main Valve will: Throttle to pass only enough water to the user to maintain a preset lower pressure.

PRESSURE REDUCING VALVE

Operation **Model Number: 40WR**

ROSS ADVANTAGE

1. Ross Valve engineers provide in depth service based on:
   a. state of the art technology and
   b. the company's experience which dates back to 1879.
2. Globe body design provides most desirable characteristics for pressure reduction.
3. Throttling action of piston gives a relatively unobstructed flow at maximum flow rates.
4. Valve operates totally on hydraulic pressure. No external controls are needed.
5. Valve is completely pre-piped, tested and adjusted in the factory.
6. Rugged construction materials provide a longer valve life and insure that the valve WILL NOT experience sudden breakdowns due to component failures.
7. All parts are built and manufactured in the USA.

Control Unit

By regulating the flow in and out of the operating chamber, an external piping circuit accurately controls the piston position. It includes:

1. Into the Operating Chamber
   a. External piping - Also attached to the inlet side of the main valve introduces main line inlet water up into the operating chamber.
   b. Needle valve - Limits water flow into the operating chamber. (Can be adjusted to increase or decrease rate at which water flows into the chamber.)
2. Out of the Operating Chamber
   a. External piping - Also attached to the outlet side of the main valve, directs water leaving the operating chamber to the downstream flow.
   b. Hydraulic pilot valve - Controls water flow out of the operating chamber by means of a diaphragm which is held in balance between a spring load on its top side and downstream water pressure underneath. (The spring resistance is preset and can be adjusted when pressure requirements change.

Operation

Because of the straight forward interaction between the control unit and the throttling piston, the valve automatically delivers a smooth flow while discharging the desired downstream reduced pressure levels.

1. When water flows out of the main valve at a preset pressure level, the
   a. Control unit causes water to flow at an equal rate in and out of the operating chamber.
   b. Piston rests in a mid open/closed position.
2. When downstream (user) pressure increases, the
   a. Downstream pressure backs up through the external pipe, into the pilot valve pushing the pilot diaphragm up.
   b. Pilot valve seat gradually closes.
   c. Water continues to enter the operating chamber through the needle valve and gets trapped.
   d. Water pressure builds up in the operating chamber, pushing the piston down.
   e. Main valve gradually closes.
3. When downstream (user) pressure decreases, the
   a. Downstream pressure on the outlet side of the pilot valve decreases.
   b. Pressure under the pilot diaphragm falls below the preset spring load pressure which pushes it down.
   c. Pilot seat gradually opens.
   d. Pressure in the operating chamber drops as more water flows out than is let in through the needle valve.
   e. Piston gradually rises and the main valve opens accordingly.

DIFFERENTIAL PRESSURE GUIDE

Valve Sizes: 4" - 36" — Globe Body

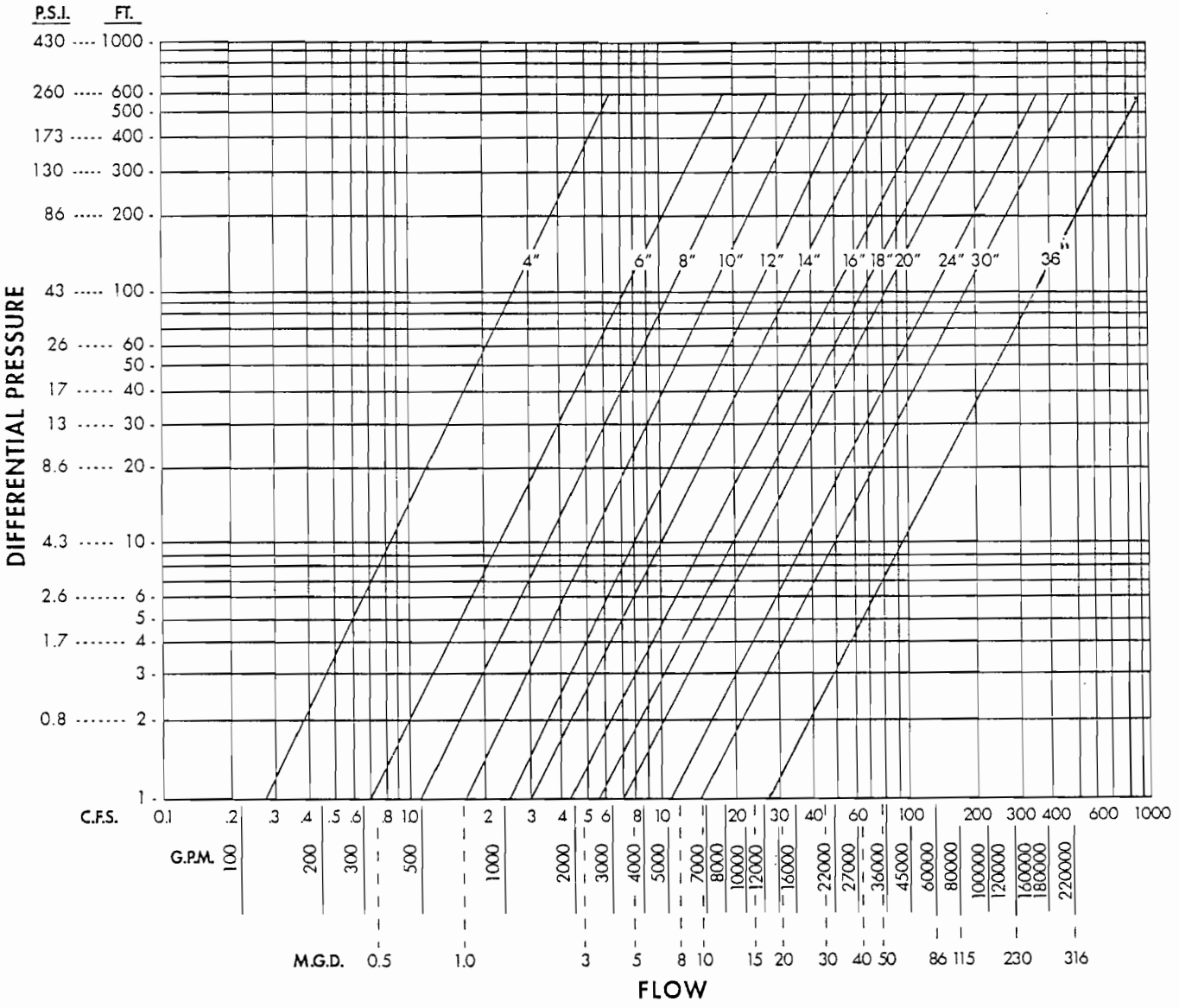

Note: Consult the factory for larger valves.

Factory: Telephone (518) 274-0961; Fax (518) 274-0210

PRESSURE REDUCING VALVE

Model Number: 40WR

Recommendation

When a wide range of flows is required, it is recommended that a large reducing valve (40WR series) be installed on a pipe parallel to a smaller reducing valve (23WR or 82EP) as follows:

The small valve - Usually adjusted for a discharge pressure setting of 3 to 5 psi above the large valve setting, will handle the low flow requirements.

The large valve - Opens only when the demands exceed the small valve capacity and pressure drops to the large valve preset pressure.

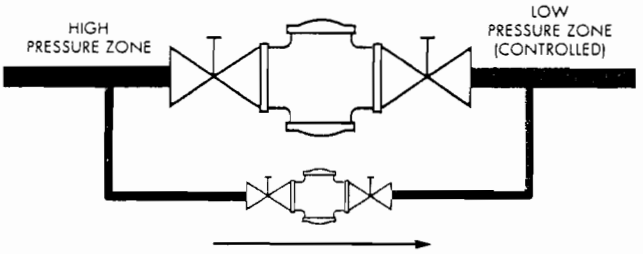

Benefits include:

1. **Reduces maintenance costs** on the larger, more expensive valve which result when the large valve operates at low flows.
2. Reduces noise which occurs when a large valve operates at low flows.
3. Avoids hunting action of a single large valve operating at low flows and the resulting pressure fluctuations.
4. Provides uninterrupted service while repacking one of the reducing valves.
5. Minimizes the effects of failure of a single large unit.

Cavitation

Cavitation may occur when 2 factors, a high pressure drop combined with a low outlet pressure, are present. Cavitation damage is caused by the collapse of the small cavities formed in the fluid stream during the sudden decrease in pressure. When the valve body or pipe walls confine the fluid stream and raise the pressure above the vapor pressure of the "bubbles", minute implosions occur resulting in extremely high impact forces. Where these implosions contact the valve parts, structural damage will result. If conditions for cavitation are expected, consult a Ross engineer.

Sizing

DO NOT OVERSIZE.

Ideal Operating Position: 20% to 100% open - In this position seat erosion is at a minimum and pressure control is stable.

Maximum Flow Rates: Limit line velocity to approximately 15 fps. The valve is capable of passing larger quantities of water for short periods of time. Sustained rates at higher levels may result in high and increased valve maintenance.

Minimum Flow Rates: Intended for sustained flow rates. Valves (in good operating condition) can shut off drop tight and handle lower flows. Sustained rates at lower levels may result in high maintenance costs.

Note

It is important to service the pilot valve periodically in order to insure dependable service. If a second pilot valve (customized feature) is not added, this will require periodic shutdown of the system.

Consult a Ross Representative

1. For recommendations if conditions for cavitation are encountered.
2. To recommend correct valve sizing.
3. To build a customized valve for any specific requirements.

CAVITATION GUIDE

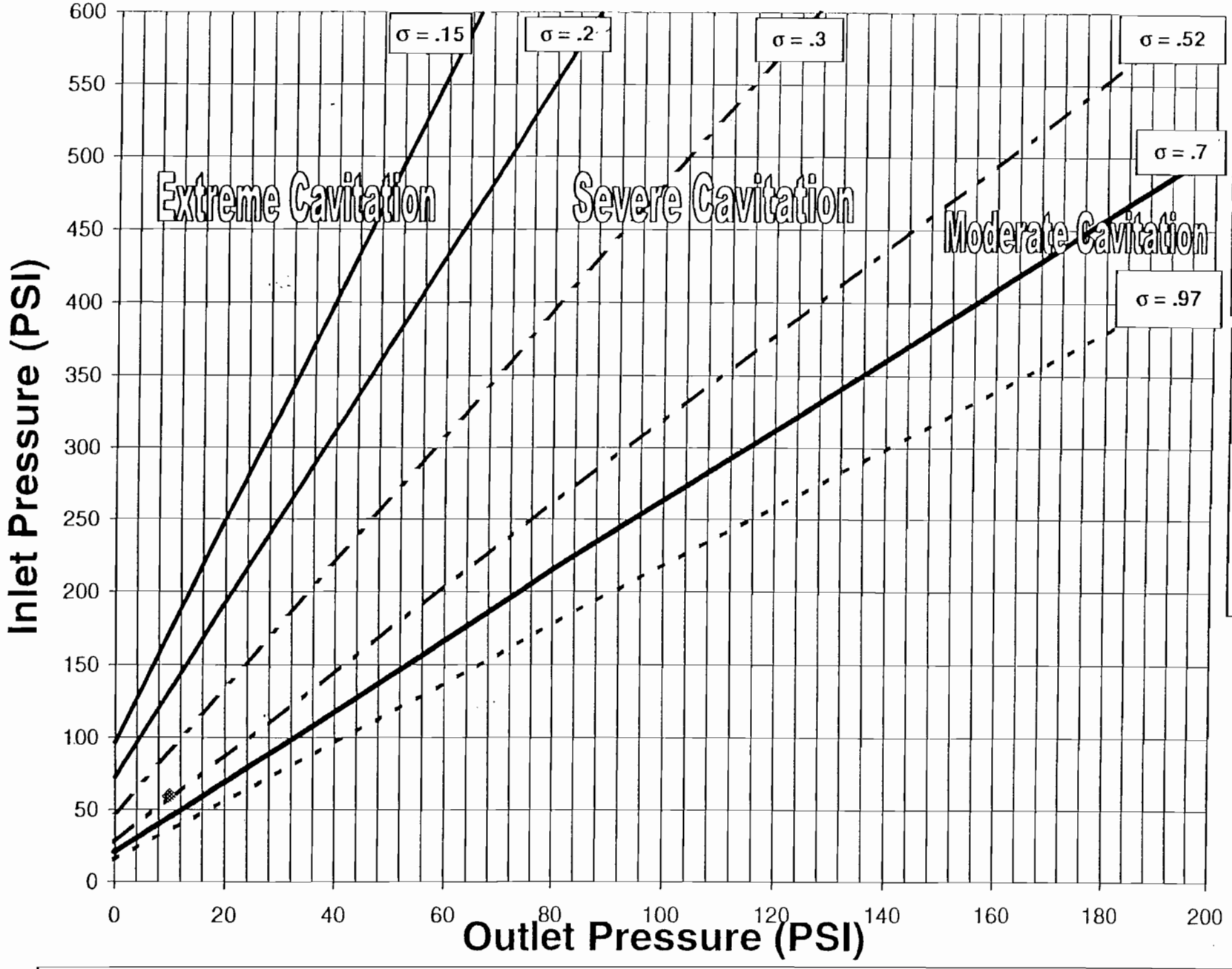

Hybrid Design or 2 Valves in Series
$\sigma < .2$

Watertamer
$.2 < \sigma < .7$

Standard Ross Design
$\sigma > .7$
Special Seat Trim
$.52 < \sigma < .7$

Cavitation plot is the resulant relation between the valve outlet pressure (+/- Atmospheric condition) and the differential pressure drop across valve. If the operating conditions fall in the cavitation zone, consult factory. In some cases, such as in pressure relief applications, cavitation can be accepted as an infrequent occurrence and not warrant additional engineering study or upgrading of the control valve.

PRESSURE REDUCING VALVE

Pilot Valves **Model Number: 40WR**

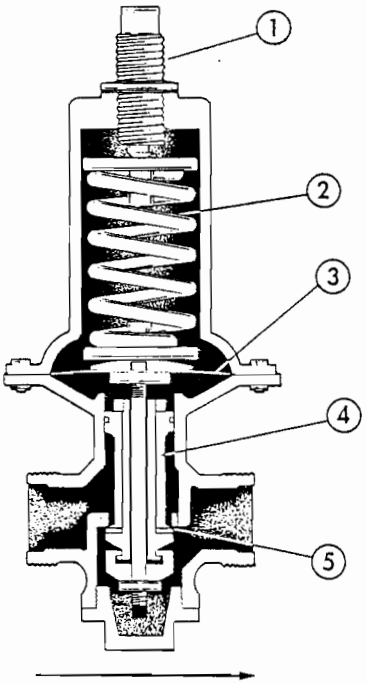

PARTS	
1	Adjusting Screw
2	Adjusting Spring
3	Diaphragm
4	Pilot Piston
5	Pilot Seat

Pilot: Internal Sensing Port

Primarily Controlled By:
Hydraulic pressure (downstream)
Located: On external piping which runs from the operating chamber to the outlet side of the main valve
Purpose: To control flow out of the mainline valve

Operation

1. When downstream (user) pressure increases, the
   a. Pressure backs up into the pilot valve, increasing pressure up through a hollow stem, under the diaphragm, pushing the diaphragm up.
   b. Pilot seat closes, restricting flow out of the operating chamber.
   c. Main valve closes accordingly.
2. When downstream (user) pressure decreases, the
   a. Pressure under the diaphragm decreases.
   b. Pilot seat opens wider, increasing flow out of the operating chamber.
   c. Main valve opens accordingly.

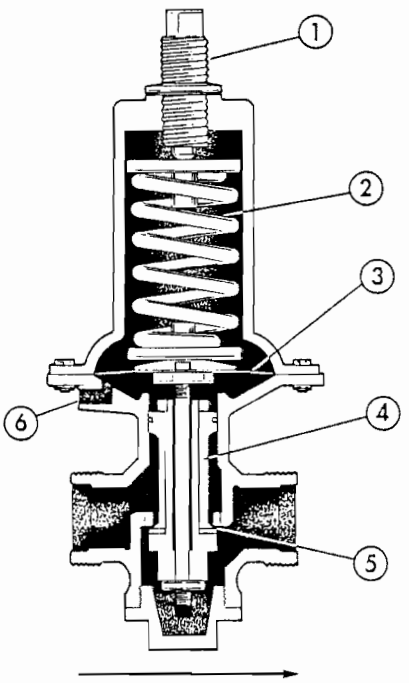

PARTS	
1	Adjusting Screw
2	Adjusting Spring
3	Diaphragm
4	Pilot Piston
5	Pilot Seat
6	Sensing Port

Pilot: External Sensing Port

Primarily Controlled By:
Hydraulic pressure (downstream)
Located: On external piping which runs from the operating chamber to the outlet side of the main valve
Purpose: To control flow out of the mainline valve
NOTE: Utilizes an external pressure sensing connection and requires a separate 1/2 inch line to the point of pressure control. Generally used where an accurate pressure signal can not be obtained at the valve body tap due to turbulence, velocity head, etc.

Operation

1. When downstream (user) pressure increases,
   a. Pressure backs up through top piping under the diaphragm, pushing the diaphragm up.
   b. Pilot seat closes, restricting flow out of the operating chamber, through the lower piping.
   c. Main valve closes accordingly.
2. When downstream (user) pressure decreases,
   a. Pressure under the diaphragm decreases.
   b. Pilot seat opens wider, increasing flow out of the operating chamber through the lower piping.
   c. Main valve opens accordingly.

Standard Pilot Adjustment Ranges

These ranges should be used as a guide only. When specific operating conditions are known, the pilot is constructed to give at least a 30% adjustment above and below the anticipated set point. Standard pilot adjustment ranges: 5 to 25 psi; 15 to 60 psi; 40 to 100 psi; 80 to 180 psi; 150 to 250 psi; over 200 psi.

PART	DESCRIPTION	QTY.	MATERIAL	
3	REGULATING SCREW	1	BRONZE	
4	LOCK NUT	1	BRONZE	
5	SPRING CHAMBER	1	BRONZE	
6	TOP SPRING WASHER	1	BRONZE	
7	SPRING(S)	VARY	STEEL	
8	BOTTOM SPRING WASH (OPT.)	1	BRONZE	
9	DIAPHRAGM BUTTON	1	BRONZE	
10	DIAPHRAGM(S)	VARY	BRONZE	*
11	BOLTS & NUTS – CHAMBER	VARY	BRONZE	
12	DIAPHRAGM NUT	1	BRONZE	
13	STEM NUT	1	BRONZE	
14	O–RING – THIMBLE	1	BUNA–N	*
15	THIMBLE	1	BRONZE	
16	SEAT PACKING	1	POLYURETHANE	*
17	VALVE SHELL	1	BRONZE	
18	VALVE STEM	1	BRONZE	
19	LINK NUT	1	BRONZE	
20	LOCK NUT	1	BRONZE	
21	BOTTOM CAP	1	BRONZE	
22	STEM – DIAPHRAGM	1	STAINLESS STEEL	
23	GASKET – BOTTOM CAP	1	COMPOSITION	*
24	GASKET – DIAPHRAGM	1	COMPOSITION	*
25	O–RING – LOCKNUT	1	BUNA–N	

* – THESE PARTS ARE SUPPLIED IN A STANDARD REPAIR KIT

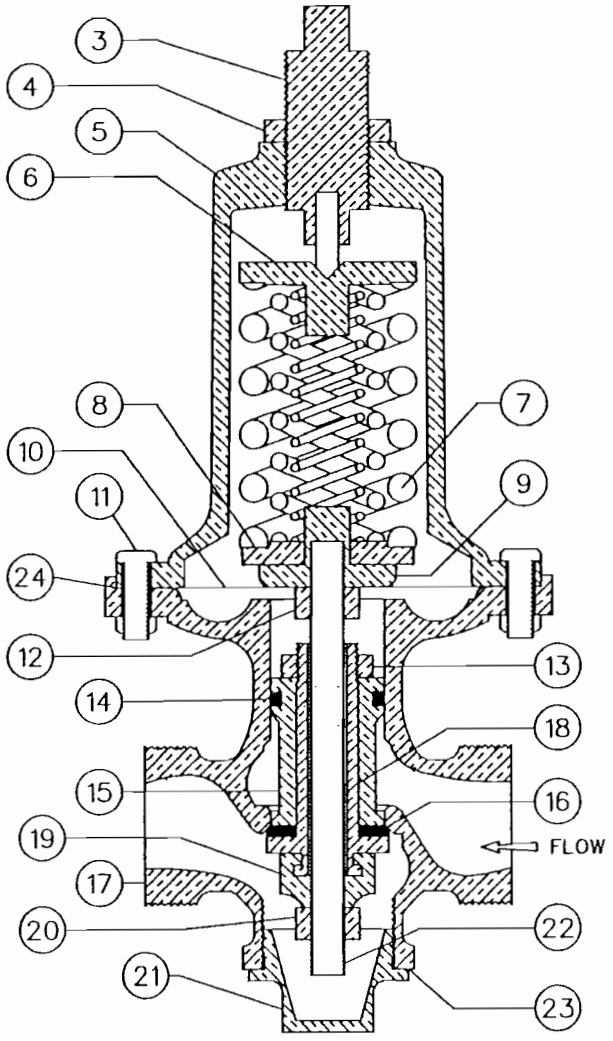

VIEW FROM PILOT INLET
(WITH INTERNAL SENSING PORT)

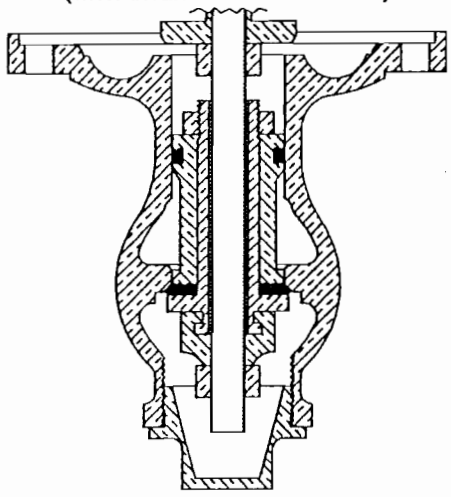

VIEW FROM VALVE INLET
(WITH SEPARATE SENSING PORT)

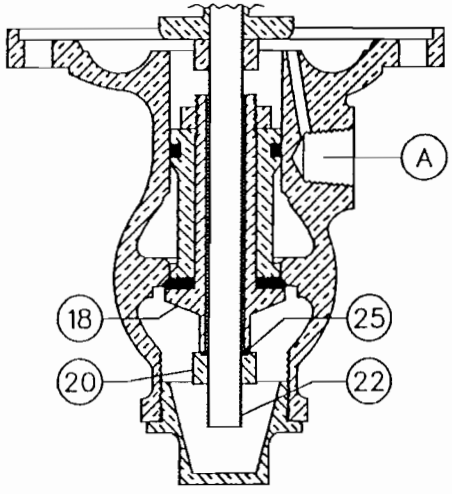

A – STATIC SENSING CONNECTION UNDER DIAPHRAGM
TO REMOTE OUTLET PRESSURE SOURCE

The purpose of a pilot valve is to control the opening and closing of the main valve by trapping or releasing water from the main valve's "operating chamber" ("K" - the chamber above the main valve piston). The **Model 40WR Pressure Reducing Pilot Valve** uses this logic in order to maintain a constant pressure downstream of the main valve.

The pilot valve operates by creating a pressure balance across the diaphragms (#10). Pressure above the diaphragms is set by the regulating screw (#3) acting on the adjusting springs (#7). Pressure beneath the diaphragms is exerted hydraulically in one of two manners:

1 - A sensing port through the stem (#18) to the outlet throat of the pilot valve, or

2 - A separate sensing port directly under the diaphragms, from a remote outlet pressure source.

When the pilot valve senses a low outlet pressure, the force of the springs (#7) causes the entire stem assembly to move down. This pushes the seat packing (#16) away from the seat, allowing water to escape from the main valve operating chamber. This causes the piston of the main valve to open, resulting in an increase in the downstream pressure.

Once the downstream pressure rises above the setting of the springs (#7), the hydraulic force overcomes the spring force and the stem assembly is pushed upwards. This causes the pilot seat to seal off, trapping water in the main valve operating chamber (with water still entering through the inlet line). This causes the piston of the main valve to close, resulting in a decrease in the outlet pressure.

This openi[illegible]nd closing sequence (commonly referred to as "throttling") is continuousl[illegible] taking place in order to maintai[illegible]nstant outlet pressure.

ROSS VALVE Mfg. Co., Inc.
6 OAKWOOD AVENUE – P.O. BOX 595 – TROY, NEW YORK, 12181 – TEL. (518) 274 0961

NO SCALE	DRAWING 40WR PILOT
DATE 4–2–63 2851/2	REVISED 9–22–99 DMB

MODEL 40WR PILOT VALVE
PRESSURE REDUCING

FILE: P40WR

NEEDLE VALVE

Sizes: One size fits all piston valves
Primarily Controlled By: Manually adjusted
Located: On external control circuit of the main valve
Purpose: To limit flow in and out of the operating chamber
Standard Shipped Adjustment:
Coarse Needle: 5/6 to 2 turns off the seat
Fine Needle: Based on individual specifications

Option

Two separate needle valves on one main valve - Provide independent control of opening and closing speeds.

Basic Application

Limit maximum flow through external piping.

Adjustment

To adjust needle valve, which can be done without shutting down the main valve,
1. Remove the hex cap.
2. With a screw driver:
   a. turn the needle counter clockwise to raise it.
   b. turn the needle clockwise to lower it.

Recommendation

It is advisable to occasionally remove the cap and lock and change the position of the needle momentarily to insure against gradual plugging.

Note

Once the optimum position is determined, no further adjustment of the needle should be required. The hex cap can be removed under pressure and the needle valve adjusted with a screw driver.

ROSS ADVANTAGE

The needle valve's sturdy construction and simple design insure reliable control of flow.

Design

Within the shell there is a stationary "needle shaped" stem which:
1. Extends into a narrowed opening (seat) which is part of the water flow route.
2. For about half its length consistently increases its width from a very narrow bottom tip.

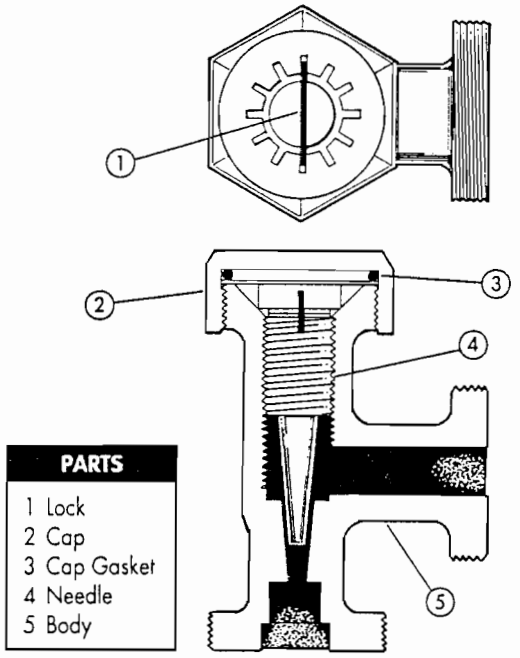

PARTS
1 Lock
2 Cap
3 Cap Gasket
4 Needle
5 Body

Operation

The simple construction reliably limits maximum flow through the external piping, depending on the adjustable stem position.
1. When the stem is adjusted to a raised position,
   a. More water can pass through the needle valve.
   b. Water enters (leaves) the operating chamber more quickly.
   c. The operating chamber fills up (empties out) more quickly.
   d. The main valve piston moves up and down more quickly.
2. When the stem is adjusted to a lowered position,
   a. Less water can pass through the needle valve.
   b. Water enters (leaves) the operating chamber more slowly.
   c. The operating chamber fills up (empties out) more slowly.
   d. The main valve piston moves up and down more slowly.

STRAINER

Purpose: Protect external piping and control devices **Model Number: 5F-2**

Sizes: 1/2" - 1"
Located: On any external piping
Purpose: To protect external piping and control devices from fouling or damage from foreign particles
Screen: Cylindrical Dutch weave stainless steel wire mesh
Piping Connection: Standard pipe thread

Option

Installed in parallel with the appropriate isolation valves to permit uninterrupted service while cleaning debris

Caution

1. Strainer should be "blown down" frequently to remove collected foreign material from the sediment chamber.
2. Strainer screens should be removed occasionally for inspection and thorough cleaning.

Note

1. To clean without shutting down the line, open the flush cock in the bottom cap for several seconds.
2. To remove the screen, which requires shutting down the line, unscrew the bottom cap assembly.

ROSS ADVANTAGE

Based on the configuration of the wire mesh screens, these strainers filter out particularly fine specks of debris.

Basic Application

Protect external piping and control devices, or any related size devices, from unwanted particles and debris.

Factory: Telephone (518) 274-0961
Fax (518) 274-0210

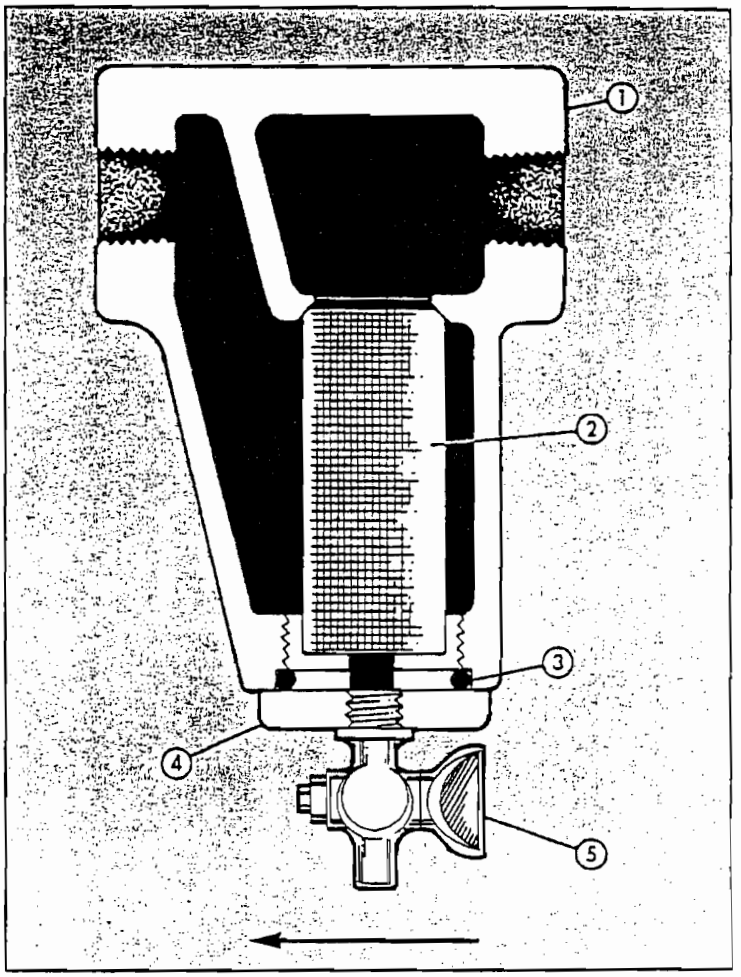

PARTS	
1. Body - Bronze	4. Cap - Brass
2. Screen - Stainless Steel	5. Flushing Cock - Brass
3. Cap Gasket - Rubber	

Operation

1. Water enters the cylindrical screen from the top and passes out through the sides of the cylinder.
2. Any particle too large to pass through .012 inch openings gets trapped in the cylinder, where, unless there is unusual turbulence, they settle at the bottom.

Pota-Pox (Fast Cure) SERIES FC20

PRODUCT PROFILE

GENERIC DESCRIPTION
Polyamide Epoxy

COMMON USAGE
Fast-curing protective coating for use in steel and concrete potable water storage facilities. Contact your Tnemec representative for other systems and additional information on potential uses.

COLORS
Primer: 1211 Red, 1255 Beige. **Topcoat:** AA90 White, WH02 Tank White, GB03 Delft Blue. **Note:** Epoxies chalk with extended exposure to sunlight. Lack of ventilation, incomplete mixing, miscatalyzation or the use of heaters that emit carbon dioxide and carbon monoxide during application and initial stages of curing may cause yellowing to occur.

SPECIAL QUALIFICATIONS
Certified by **NSF International** in accordance with **ANSI/NSF Std. 61** for use on the interior of potable water storage tanks and reservoirs of 1,000 gallons (3785 L) capacity or greater. Conforms to **AWWA D 102 Inside Systems No. 1 and No. 2.** Contact your Tnemec representative for approved systems and additional information on potential uses.

PERFORMANCE CRITERIA
Extensive test data available. Contact your Tnemec representative for specific test results.

COATING SYSTEM

PRIMERS
Self-priming, 20, 91-H_20. **Note:** 91-H_20 is ANSI/NSF Std. 61 certified by UL as a primer for Series FC20. Refer to the 91-H_20 product data sheet for additional information.

TOPCOATS
Interior: Series 20, FC20, N140, 264, 265
Exterior: Series 20, FC20, N27, 66, 69, 73, 74, 75, 104, N140, 161, 175
Refer to COLORS on applicable topcoat data sheets for additional information.

SURFACE PREPARATION

STEEL
Immersion Service: SSPC-SP10 Near-White Blast Cleaning
Non-Immersion Service: SSPC-SP6 Commercial Blast Cleaning

PRIMED SURFACES
Immersion Service: Scarify the Series FC20 prime coat surface by brush-blasting with fine abrasive before topcoating if it has been exposed to sunlight for 60 days or longer.

CAST/DUCTILE IRON
Contact your Tnemec representative or Tnemec Technical Services.

CONCRETE
Allow new concrete to cure for 28 days. Brush-off blast. Holes, pits, voids and cracks should be filled with 63-1500 Filler and Surfacer (ANSI/NSF Std. 61 certified).

ALL SURFACES
Must be clean, dry and free of oil, grease and other contaminants.

TECHNICAL DATA

VOLUME SOLIDS*
58.0 ± 2.0% (mixed)

RECOMMENDED DFT
Primer: 3.0 to 5.0 mils (75 to 125 microns) per coat.
Intermediate, Topcoat: 4.0 to 6.0 mils (100 to 150 microns) per coat.
Note: Number of coats and thickness requirements will vary with substrate, application method and exposure. Contact your Tnemec representative.

CURING TIME

Temperature	To Touch	To Handle	To Recoat	Immersion
75°F (24°C)	1 hour	2 hours	3 hours	6 days
65°F (18°C)	2 hours	4 hours	5-6 hours	8 days
55°F (13°C)	3-4 hours	6-8 hours	10-12 hours	12 days
45°F (7°C)	6-7 hours	12-14 hours	16-18 hours	20 days
35°F (2°C)	8-10 hours	16-18 hours	20-22 hours	25 days

Curing time varies with surface temperature, air movement, humidity and film thickness.

VOLATILE ORGANIC COMPOUNDS

Unthinned	Thinned 10%
2.90-2.97 lbs/gallon (347-356 grams/litre)	3.26-3.32 lbs/gallon (391-398 grams/litre)

THEORETICAL COVERAGE*
930 mil sq ft/gal (22.8 m^2/L at 25 microns). See APPLICATION for coverage rates.

NUMBER OF COMPONENTS
Two: Part A and Part B

PACKAGING
5 gallon (18.9L) pails and 1 gallon (3.79L) cans — Order in multiples of 2.

NET WEIGHT PER GALLON*
12.50 ± 0.25 lbs (5.7 ± .11 kg) (mixed)

Published technical data and instructions are subject to change without notice. The online catalog at www.tnemec.com should be referenced for the most current technical data and instructions or you may contact your Tnemec representative for current technical data and instructions.
© July 1999, by Tnemec Company, Inc.

SERIES FC20 Pota-Pox (Fast Cure)

TECHNICAL DATA continued

STORAGE TEMPERATURE	Minimum 20°F (-7°C)	Maximum 110°F (43°C)
TEMPERATURE RESISTANCE	(Dry) Continuous 250°F (121°C)	Intermittent 275°F (135°C)
SHELF LIFE	24 months at recommended storage temperature.	
FLASH POINT - SETA	Part A: 82°F (28°C)	Part B: 64°F (18°C)
HEALTH & SAFETY	Paint products contain chemical ingredients which are considered hazardous. Read container label warning and Material Safety Data Sheet for important health and safety information prior to the use of this product. **Keep out of the reach of children.**	

APPLICATION

COVERAGE RATES*

	Primer			Intermediate / Topcoat		
	Dry Mils (Microns)	Wet Mils (Microns)	Sq Ft/Gal (m^2/Gal)	Dry Mils (Microns)	Wet Mils (Microns)	Sq Ft/Gal (m^2/Gal)
Suggested (1)	4.0 (100)	7.0 (180)	232 (21.6)	5.0 (125)	8.5 (215)	186 (17.3)
Minimum	3.0 (75)	5.0 (125)	310 (28.8)	4.0 (100)	7.0 (180)	232 (21.6)
Maximum	5.0 (125)	8.5 (215)	186 (17.3)	6.0 (150)	10.5 (265)	155 (14.4)

(1) Note: Roller or brush application requires two or more coats to obtain recommended film thickness. Allow for overspray and surface irregularities. Film thickness is rounded to the nearest 0.5 mil or 5 microns. Application of coating below minimum or above maximum recommended dry film thicknesses may adversely affect coating performance.

MIXING

Power mix contents of each container, making sure no pigment remains on the bottom. Pour a measured amount of Part B into a clean container large enough to hold both components. Add an equal volume of Part A to Part B while under agitation. Continue agitation until the two components are thoroughly mixed. Do not use mixed material beyond pot life limits. **Note:** Both components should be above 50°F (10°C) prior to mixing. For application to surfaces between 35°F to 50°F (2°C to 10°C), allow mixed material to stand thirty (30) minutes and restir before using. For optimum application properties, blended components should be above 60°F (16°C).

POT LIFE

16 hours at 35°F (2°C) 2 hours at 77°F (25°C) 1/2 hour at 100°F (38°C)

THINNING

Use No. 4 Thinner. For air spray, thin up to 10% or ¾ pint (380 mL) per gallon. For airless spray, roller or brush, thin up to 5% or ¼ pint (190 mL) per gallon. **Caution:** Series FC20 NSF certification is based on thinning with No. 4 Thinner. Use of any other thinner voids ANSI/NSF Std. 61 certification.

SURFACE TEMPERATURE

Minimum 35°F (2°C) Maximum 135°F (57°C) The surface should be dry and at least 5°F (3°C) above the dew point. Coating won't cure below minimum surface temperature.

APPLICATION EQUIPMENT

Air Spray

Gun	Fluid Tip	Air Cap	Air Hose ID	Mat'l Hose ID	Atomizing Pressure	Pot Pressure
DeVilbiss MBC or JGA	E	765 or 78	5/16" or 3/8" (7.9 or 9.5 mm)	3/8" or 1/2" (9.5 or 12.7 mm)	75-100 psi (5.2-6.9 bar)	10-20 psi (0.7-1.4 bar)

Low temperatures or longer hoses require higher pot pressure.

Airless Spray

Tip Orifice	Atomizing Pressure	Mat'l Hose ID	Manifold Filter
0.015"-0.019" (380-485 microns)	1800-3000 psi (124-207 bar)	1/4" or 3/8" (6.4 or 9.5 mm)	60 mesh (250 microns)

Use appropriate tip/atomizing pressure for equipment, applicator technique and weather conditions.
Plural Component Spray: Contact your Tnemec representative or Tnemec Technical Services.
Roller: Roller application optional when environmental restrictions do not allow spraying. Use 3/8" or 1/2" (9.5 mm or 12.7 mm) synthetic nap covers.
Brush: Recommended for small areas only. Use high quality natural or synthetic bristle brushes.

CLEANUP

Flush and clean all equipment immediately after use with the recommended thinner or MEK.

*Values may vary with color.

WARRANTY & LIMITATION OF SELLER'S LIABILITY: Tnemec Company, Inc. warrants only that its coatings represented herein meet the formulation standards of Tnemec Company, Inc.
THE WARRANTY DESCRIBED IN THE ABOVE PARAGRAPH SHALL BE IN LIEU OF ANY OTHER WARRANTY, EXPRESSED OR IMPLIED, INCLUDING BUT NOT LIMITED TO, ANY IMPLIED WARRANTY OF MERCHANTABILITY OR FITNESS FOR A PARTICULAR PURPOSE. THERE ARE NO WARRANTIES THAT EXTEND BEYOND THE DESCRIPTION ON THE FACE HEREOF. The buyer's sole and exclusive remedy against Tnemec Company, Inc. shall be for replacement of the product in the event a defective condition of the product should be found to exist and the exclusive remedy shall not have failed its essential purpose as long as Tnemec is willing to provide comparable replacement product to the buyer. NO OTHER REMEDY (INCLUDING, BUT NOT LIMITED TO, INCIDENTAL OR CONSEQUENTIAL DAMAGES FOR LOST PROFITS, LOST SALES, INJURY TO PERSON OR PROPERTY, ENVIRONMENTAL INJURIES OR ANY OTHER INCIDENTAL OR CONSEQUENTIAL LOSS) SHALL BE AVAILABLE TO THE BUYER. Technical and application information herein is provided for the purpose of establishing a general profile of the coating and proper coating application procedures. Test performance results were obtained in a controlled environment and Tnemec Company makes no claim that these tests or any other tests, accurately represent all environments. As application, environmental and design factors can vary significantly, due care should be exercised in the selection and use of the coating. FOR INDUSTRIAL USE ONLY.

TNEMEC COMPANY INCORPORATED
6800 CORPORATE DRIVE, KANSAS CITY, MISSOURI 64120-1372 TEL: 1 800 TNEMEC 1 www.tnemec.com

SPECIFICATIONS
ROSS MODEL 40WR FIGURE 1
PRESSURE REDUCING VALVE

OPERATION:
The Ross Model 40WR Figure 1 pressure reducing valve shall reduce a high incoming pressure to a lower, constant discharge pressure regardless of variations in upstream pressure or flow rate.

DESIGN:
The pressure reducing valve shall be flanged body, fully mounted, external pilot operated, with free floating piston (operated without springs, diaphragm or levers), single seat with seat bore equal to size of valve. The minimum travel of the piston shall be equal to 25% of the diameter of the seat. For true alignment, the piston shall be guided above and below the seat a distance equal to no less than 75% of the diameter of the seat to correct lateral thrust and stem binding. Piston shall be cushioned and so designed as to insure positive closure. The main valve shall be packed with leather (or other soft material) to insure tight closure and prevent metal-to-metal friction and seating. Furnished with indicator rod & stuffing box to show position of piston opening. The design shall be such that repairs and dismantling internally of main valve may be made without its removal from the line.

The hydraulic pilot(s) with a range for adjustment and controlling the operation of main valve, shall be easily accessible, and so arranged with isolation ball valves to allow for its removal from the control circuit while the main valve is under pressure. An external strainer with flushing cock shall be provided in the control circuit to protect the pilot and speed control valve(s).

The external controls and associated rigid brass piping/fittings necessary for proper operation (except the separate

static pressure sensing line if required), shall be factory assembled and furnished with the main valve. Brass bushings with gauge cock on inlet and outlet of main valve to receive pressure gauges for testing purposes.

PHYSICAL AND CHEMICAL PROPERTIES:
Valve body and caps shall be constructed of gray iron castings that conform to ASTM Specification A 126 Class B, ductile iron castings that conform to ASTM Specification A536-84, **or** steel castings that conform to ASTM Specification A216 Grade WCB.

Bronze parts shall conform to ASTM Specification B-62. Stainless parts shall conform to ASTM Specification A743 Grade CF-8 **or** CF-8M. Teflon coated parts shall receive two coats of Teflon TFE with a total minimum thickness of 10 mils.

The flanged assemblies shall conform to ANSI standards for wall thickness of body and caps, and flange thickness and drilling, subject to other specified standards.

TESTS:
A hydrostatic test shall be performed at the factory prior to shipment. The valve shall be tested to two (2) times the working pressure, maximum 500 psi testing pressure, subject to contract. The valve performance and hydrostatic tests may be witnessed by the customer/engineer or representative.

PAINTING:
Ferrous surfaces of valve shall be coated with NSF Certified Epoxy (Tnemec Series FC20) in accordance with ANSI/NSF Std. 61, and conforms to AWWA D102 Inside System No. 1.

Valve shall be equal in all respects to the Model 40WR Figure 1 as manufactured by the Ross Valve Mfg. Co., Inc.

NOTE: The Ross Valve Mfg. Co., Inc., reserves the right to modify valve construction which will result in equal or superior performance to existing designs. These modifications may be made at any time and at the sole discretion of the manufacturer.

Support Services – Ross Valve provides personal service in every phase of development, installation, and maintenance. Services include:

DEDICATED SUPPORT LINES

- Sales engineers available Monday through Friday, 6 a.m. to 5:30 p.m. to help you with any questions — (518) 274-0961
- Fax machine — (518) 274-0210
- After hours phone/fax line — (518) 279-4373
- E-Mail - sales@rossvalve.com

Service after sale — We are always available to provide answers to any questions, or provide technical assistance. No sale is ever "final" — we continue to work with you, until you are 100% satisfied with your valve.

TRAINING

Factory Training — Ross Valve believes that our customers should know as much as possible about our products. That is why we periodically host Customer Training seminars at our facility in Troy, New York. Here, our customers learn the workings of the valves, how to correctly maintain them, and how they are manufactured.

In addition, Ross representatives are often in the field giving product seminars for your convenience.

WARRANTY

All valves and materials are guaranteed free from defects for 1 year from the date shipped.

FIELD SERVICE

When a repair, upgrade, or modification is required for an existing Ross Valve, factory-trained Ross Service Technicians offer the best service available, including:

- On-site/hands-on training for your staff.
- Trouble shooting expertise for our valves and your entire system.
- Technical assistance for start-up or continuing training.
- Fully inventoried service vehicles to allow replacement of necessary parts.
- Ability to return older valves to "like-new" condition.
- Confined Space/OSHA Trained.

MAINTENANCE

Ross Valves are economically rebuilt. Every internal part is replaceable through the top of the valve, without removing it from the line. All seals and packings are replaceable, which contributes to the valve's longevity.

Ross Valve stocks a wide variety of repair parts which can be received by the customer as early as the next day. In-house computer links track packages to ensure timely delivery.

Detailed historical record keeping gives us a full report of all maintenance or upgrades that have been made on each valve. This allows us to evaluate performance in the past and maximize performance in the future.

ROSS VALVE Mfg. Co. Inc.

6 Oakwood Ave., P.O. Box 595, Troy, NY 12181, USA

Phone: (518) 274-0961 Fax: (518) 274-0210
After Hours: (518) 279-4373 E-Mail: sales@rossvalve.com
Website: www.rossvalve.com

Milherst Construction, Inc.
P.O. Box 631
Getzville, New York 14068

Phone (716) 688-9098
Fax (716) 688-9562

Submittal No.41

Lehigh Valley RR Derailment Site

Owner NYS Department of Environmental Conservation
Bureau of Construction Services, 12th Floor
625 Broadway
Albany, NY 12233-7013

Contractor Milherst Construction, Inc

Date April 3, 2002

Item: Bachflow Preventers - Reduced Pressure Assembly

Specification:

Section: 11393

Page No.: 11393-4

Para. No.: 2.05 - Addendum 2

Drawing No.:

Location: Individual Services

Milherst Construction, Inc. certifies that all quantities, dimensions, specified performance criteria, installation requirements, materials, catalog numbers, and similar data with respect thereto have been reviewed or that each Shop Drawing or sample has been coordinated with other Shop Drawings and samples and with the requirements of the Work and Contract Documents.

By: Charles F. Kubiniec

Charles F. Kubiniec
Project Manager

1. The are no 3/4" RPZ's on this project and Bid Item No. 29 is for pressure reducing valves

2. All RPZ's must have bronze strainers

☐ **APPROVED**

☒ **APPROVED AS CORRECTED**
~~(Resubmit final copy for file)~~

☐ **REVISE AND RESUBMIT BEFORE PROCEEDING**

☐ **NOT APPROVED**

Review only for conformance with the design concept of the project and with information given in the Contract Documents. The Contractor is responsible for: verifying that dimensions are confirmed and correlated at the job site; obtaining information that pertains to the fabrication processes or to techniques of construction, and: coordinating the work of all subcontractors.
STEARNS & WHELER, LLC Engineers and Scientists

by TJF Date 4/10/02

SPECIFICATION SHEET MODEL 860 (1/2" - 2")

FEBCO®
BACKFLOW PREVENTION

REDUCED PRESSURE ASSEMBLY

Characteristics

Physical Properties	
Size	1/2", 3/4", 1", 1 1/4", 1 1/2", 2"
Max. Working Pressure	175 PSI (1200 KPa)
Hydrostatic Test Press.	350 PSI (2400 KPa)
Temperature Range	32°F to 140°F (0°C to 60°C)
End Connections	Threaded ANSI B2.1
Materials	
Valve Body	Bronze
Elastomers	Silicone
Springs	Stainless Steel

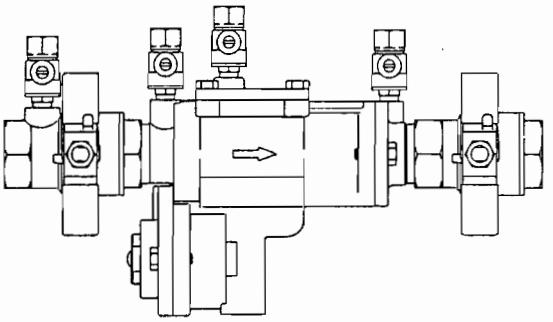

MODEL 860 (1/2" - 2") REDUCED PRESSURE ASSEMBLY

Agency Compliance

- ANSI/AWWA Conformance (C511-92)
- ASSE Listed (Std. 1013)
- CSA
- Approved by the Foundation for Cross Connection Control and Hydraulic Research at the University of Southern California.

Application

Health Hazard

Options

☑ Wye - Strainer

Model 860 (1/2" - 2") Flow Curves

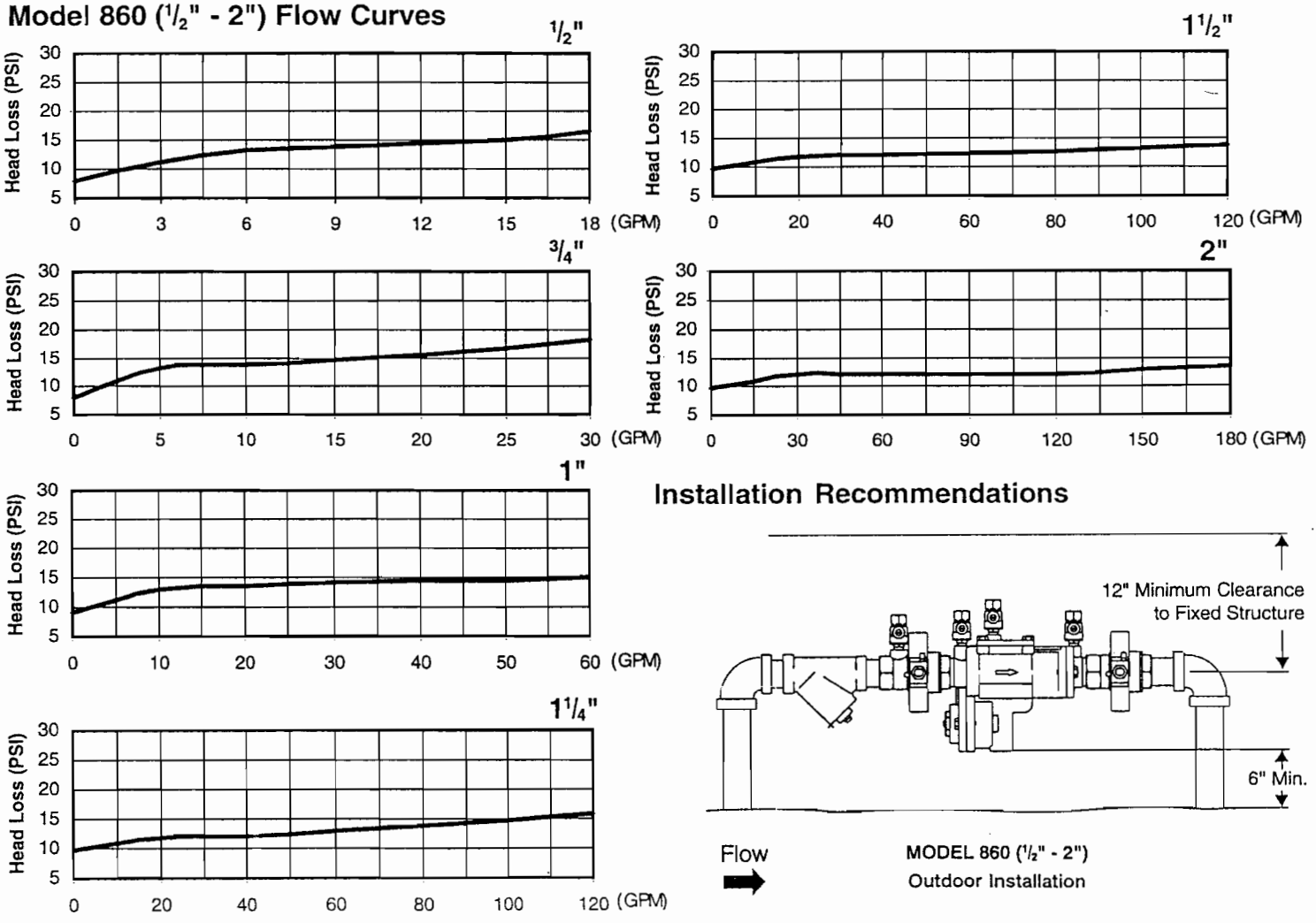

Installation Recommendations

MODEL 860 (1/2" - 2")
Outdoor Installation

Model 860 (1/2" - 2")

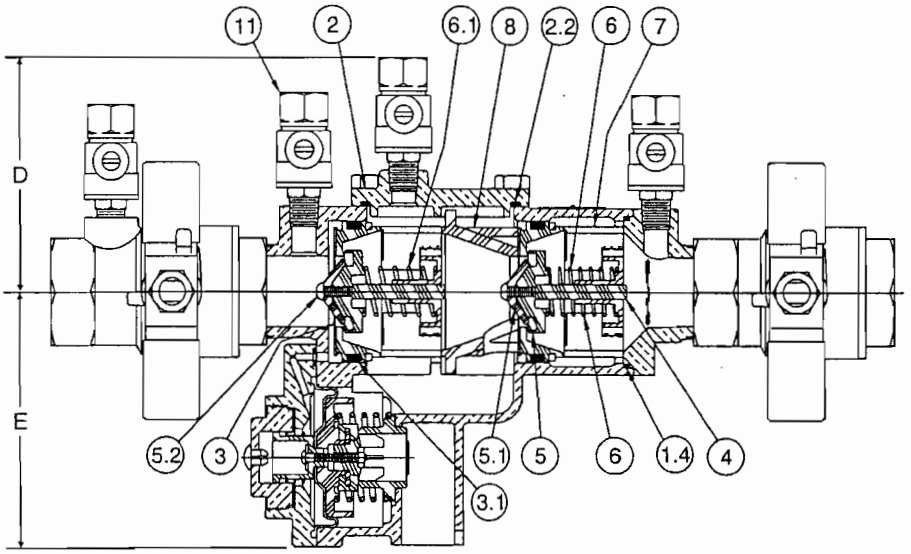

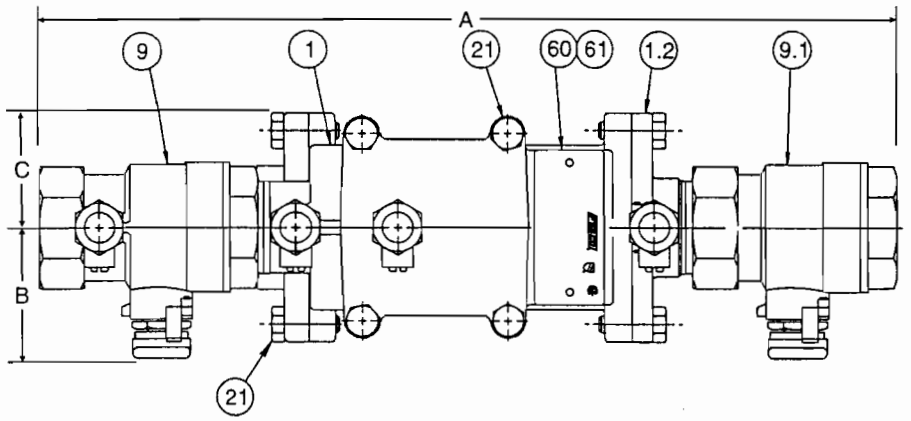

ITEM	DESCRIPTION	MATERIALS
1	Body	Bronze
1.2	Tailpiece	Bronze
1.4	O-Ring	Silicone
2	Cover	Bronze
2.2	O-Ring	Silicone
3	Seat	Noryl
3.1	O-Ring	Silicone
4	Poppet	Noryl
5	Seat Disc	Silicone Rubber
5.1	Disc Retainer	Noryl
5.2	Rnd HD Screw	Phillips, 18-8 SS
6	Spring	SS
6.1	Spring	SS
7	Guide	Noryl
8	Retainer Spacer	Noryl
9	Ball Valve	Bronze
9.1	Ball Valve	Bronze
11	Test Cock	Bronze
12	Seat Ring-RV	Noryl
12.1	Gasket Ring-RV	Silicone Rubber
13	Spring-RV	SS
14	Seat Disc-RV	Silicone Rubber/SS
15	Diaphragm-RV	Rubber/Fabric
16	Outer Diaphragm-RV	Rubber/Fabric
17	Small Piston-RV	Noryl
17.1	Rnd HD Screw	Phillips, 18-8 SS
17.2	Washer	18-8 SS
17.3	Hex Nut	18-8 SS
18	Cylinder-RV	Brass
18.1	Slip Ring-Cylinder	Acetal
18.2	Slide (Plug)	Nylon
19	Cover-RV	Bronze
20	O-Ring	Silicone
21	Hex HD Capscrew	18-8 SS
22	Large Piston-RV	Noryl
23	Guide-RV	Noryl
60	Identification Plate	Brass
61	Drive Screw Stick	SS

Relief Valve Assembly

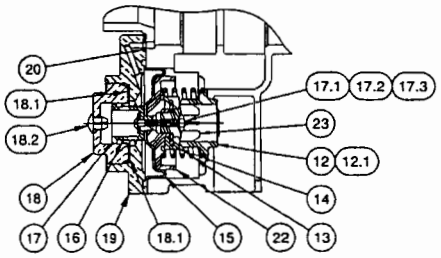

Check Assembly

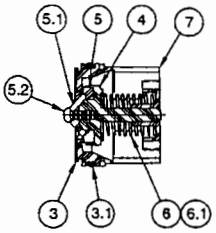

Dimensions and Weights

SIZE	in / (mm) A	B	C	D	E	NET WT. lbs / (kg)
1/2"	10 (254.00)	1 1/2 (38.10)	1 1/2 (38.10)	3 1/8 (79.38)	3 1/2 (88.90)	5.6 (2.54)
3/4"	10 3/4 (273.05)	1 1/2 (38.10)	1 1/2 (38.10)	3 1/8 (79.38)	3 1/2 (88.90)	5.8 (2.63)
1"	12 1/2 (317.50)	1 7/8 (47.63)	1 5/8 (41.28)	3 3/8 (85.73)	3 5/8 (92.08)	9.2 (4.18)
1 1/4"	15 7/8 (403.23)	3 (76.20)	2 1/2 (63.50)	4 1/4 (107.95)	5 5/8 (142.88)	20.2 (9.16)
1 1/2"	16 3/8 (415.93)	3 (76.20)	2 1/2 (63.50)	4 1/4 (107.95)	5 5/8 (142.88)	20.6 (9.35)
2"	17 5/8 (449.94)	3 1/2 (88.90)	2 1/2 (63.50)	4 1/4 (107.95)	5 5/8 (142.88)	24.8 (11.26)

Note: Dimensions are nominal. Allowances must be made for normal manufacturing tolerances.

FEBCO Backflow Prevention
P.O. Box 8070 • Fresno, CA 93747-8070
559 252-0791 • Fax: 559 453-9030 • ***www.cmb-ind.com***

SS860SM 10/99

Copyright 2000 CMB Industries, Inc.

CMB Industries, Inc.
A United Dominion Company

ISO 9001 Certified

SPECIFICATION SHEET MODEL 860U (½" - 2")

FEBCO®
BACKFLOW PREVENTION

Reduced Pressure Assembly with Union End Ball Valves

Characteristics

Physical Properties

Size	½", ¾", 1", 1¼", 1½", 2"
Max. Working Pressure	175 PSI (1200 KPa)
Hydrostatic Test Press.	350 PSI (2400 KPa)
Temperature Range	32°F to 140°F (0°C to 60°C)
End Connections	Threaded ANSI B2.1

Materials

Valve Body	Bronze
Elastomers	Silicone
Springs	Stainless Steel

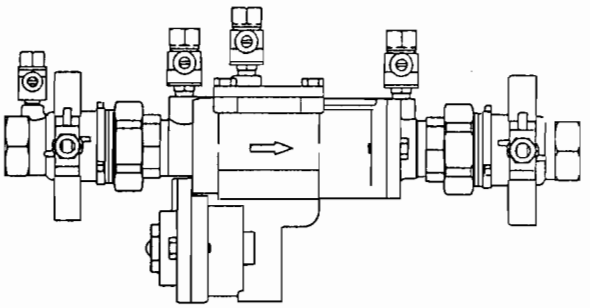

MODEL 860U (½" - 2") REDUCED PRESSURE ASSEMBLY

Agency Compliance

- ANSI/AWWA Conformance (C511-92)
- ASSE Conformance (Std. 1013)
- Approved by the Foundation for Cross Connection Control and Hydraulic Research at the University of Southern California.

Application

Health Hazard

Options

☐ Wye - Strainer

Model 860U (½" - 2") Flow Curves

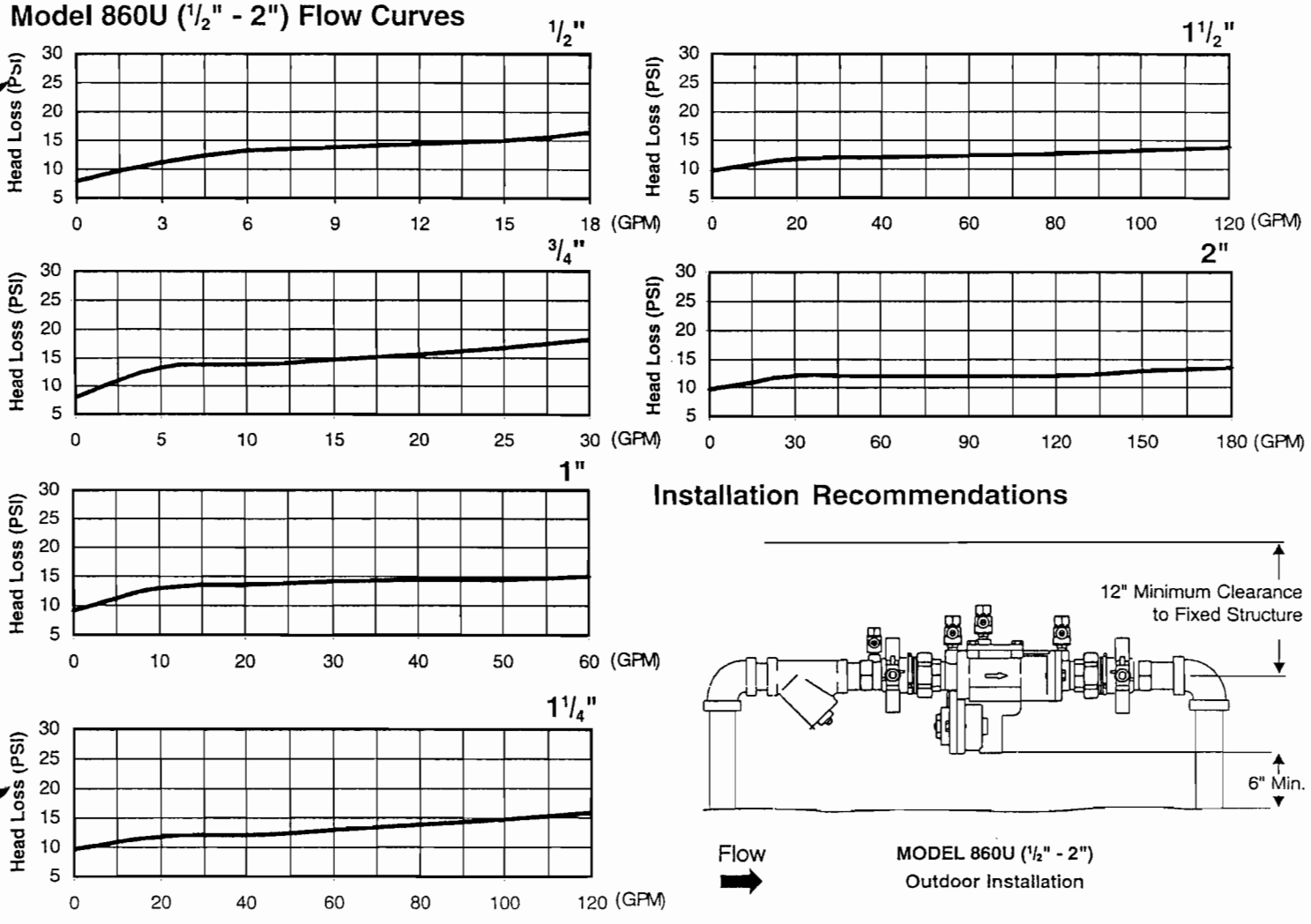

Installation Recommendations

Flow ➡

MODEL 860U (½" - 2")
Outdoor Installation

Model 860U ($1/2$" - 2")

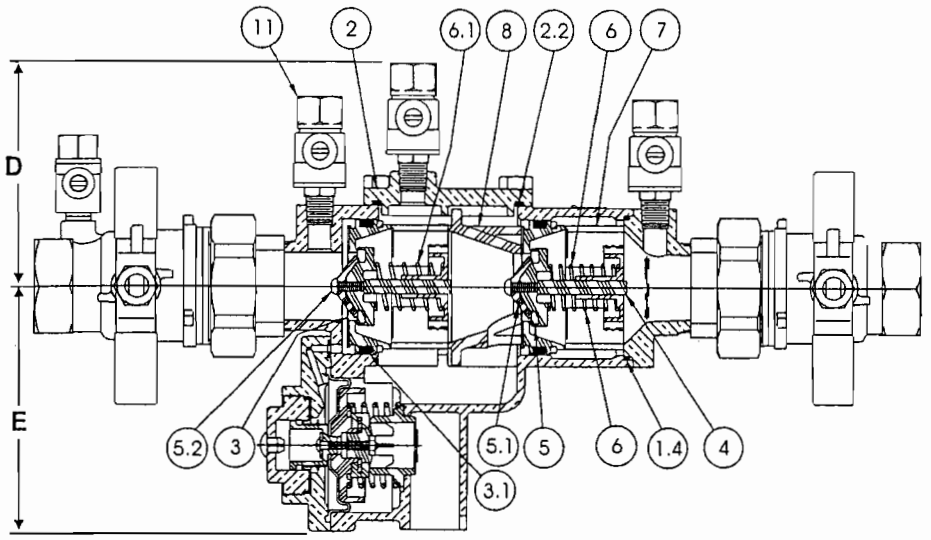

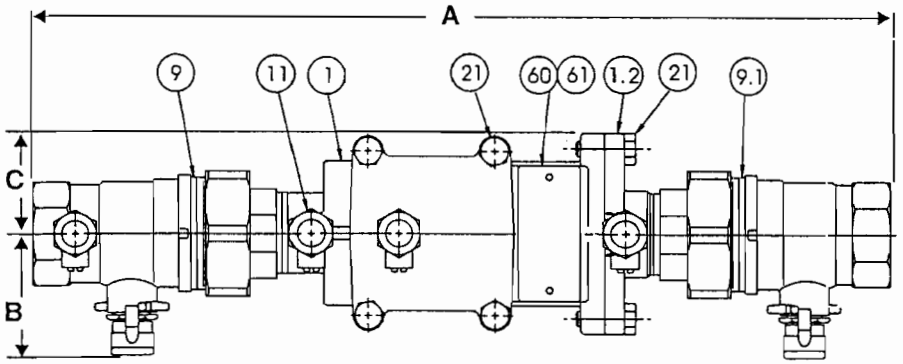

ITEM	DESCRIPTION	MATERIALS
1	Body	Bronze
1.2	Tailpiece	Bronze
1.4	O-Ring	Silicone
2	Cover	Bronze
2.2	O-Ring	Silicone
3	Seat	Noryl
3.1	O-Ring	Silicone
4	Poppet	Noryl
5	Seat Disc	Silicone Rubber
5.1	Disc Retainer	Noryl
5.2	Rnd HD Screw	Phillips, 18-8 SS
6	Spring	SS
6.1	Spring	SS
7	Guide	Noryl
8	Retainer Spacer	Noryl
9	Union End Ball Valve	Bronze
9.1	Union End Ball Valve	Bronze
11	Test Cock	Bronze
12	Seat Ring-RV	Noryl
12.1	Gasket Ring-RV	Silicone Rubber
13	Spring-RV	SS
14	Seat Disc-RV	Silicone Rubber/SS
15	Diaphragm-RV	Rubber/Fabric
16	Outer Diaphragm-RV	Rubber/Fabric
17	Small Piston-RV	Noryl
17.1	Rnd HD Screw	Phillips, 18-8 SS
17.2	Washer	18-8 SS
17.3	Hex Nut	18-8 SS
18	Cylinder-RV	Brass
18.1	Slip Ring-Cylinder	Acetal
18.2	Slide (Plug)	Nylon
19	Cover-RV	Bronze
20	O-Ring	Silicone
21	Hex HD Capscrew	18-8 SS
22	Large Piston-RV	Noryl
23	Guide-RV	Noryl
60	Identification Plate	Brass
61	Drive Screw Stick	SS

Relief Valve Assembly

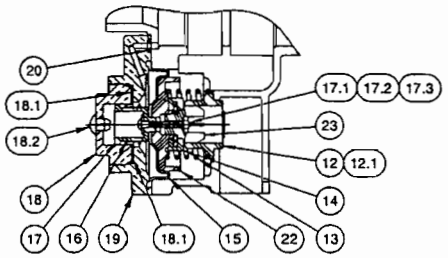

Check Assembly

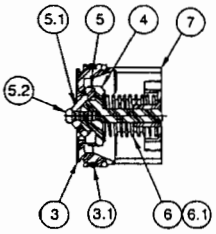

Dimensions and Weights

SIZE	U.S. - Inches (Meteric - MM) A	B	C	D	E	NET WT. Lbs. (Kgs.)
$1/2$" (12)	$11\,3/4$ (298.5)	$1\,1/2$ (38.1)	$1\,1/2$ (38.1)	$3\,1/8$ (79.4)	$3\,1/2$ (88.9)	6.0 (2.7)
$3/4$" (20)	$12\,1/2$ (317.5)	$1\,1/2$ (38.1)	$1\,1/2$ (38.1)	$3\,1/8$ (79.4)	$3\,1/2$ (88.9)	6.9 (3.1)
1" (25)	$14\,5/8$ (371.5)	$1\,7/8$ (47.6)	$1\,5/8$ (41.3)	$3\,3/8$ (85.7)	$3\,5/8$ (92.1)	9.3 (4.2)
$1\,1/4$" (30)	$18\,1/4$ (463.6)	3 (76.2)	$2\,1/2$ (63.5)	$4\,1/4$ (108.0)	$5\,5/8$ (142.9)	19.3 (8.8)
$1\,1/2$" (40)	$18\,7/8$ (479.4)	3 (76.2)	$2\,1/2$ (63.5)	$4\,1/4$ (108.0)	$5\,5/8$ (142.9)	22.4 (10.2)
2" (50)	$20\,1/2$ (520.7)	$3\,1/2$ (88.9)	$2\,1/2$ (63.5)	$4\,1/4$ (108.0)	$5\,5/8$ (142.9)	26.9 (12.2)

Note: Dimensions are nominal. Allowances must be made for normal manufacturing tolerances.

FEBCO Backflow Prevention
P.O. Box 8070 • Fresno, CA 93747-8070
559 252-0791 • Fax: 559 453-9030 • *www.cmb-ind.com*

CMB Industries, Inc.
A United Dominion Company

ISO 9001 Certified

SS860U 5/99 Copyright 2000 CMB Industries, Inc.

Milherst Construction, Inc.
P.O. Box 631
Getzville, New York 14068

Phone (716) 688-9098
Fax (716) 688-9562

Submittal No.42

Lehigh Valley RR Derailment Site

Owner NYS Department of Environmental Conservation
Bureau of Construction Services, 12th Floor
625 Broadway
Albany, NY 12233-7013

Contractor Milherst Construction, Inc

Date April 3, 2002

Item: Bachflow Preventers - Reduced Pressure Assembly

Specification: 4" Model 860
Section: 11393
Page No.: 11393-4
Para. No.: 2.05 - Addendum 2
Drawing No.:
Location: Hot Box

Milherst Construction, Inc. certifies that all quantities, dimensions, specified performance criteria, installation requirements, materials, catalog numbers, and similar data with respect thereto have been reviewed or that each Shop Drawing or sample has been coordinated with other Shop Drawings and samples and with the requirements of the Work and Contract Documents.

By: Charles F. Kubiniec
Charles F. Kubiniec
Project Manager

1. Must have strainer installed with RPZ.

☐ **APPROVED**

☒ **APPROVED AS CORRECTED**
~~**(Resubmit final copy for file)**~~

☐ **REVISE AND RESUBMIT BEFORE PROCEEDING**

☐ **NOT APPROVED**

Review only for conformance with the design concept of the project and with information given in the Contract Documents. The Contractor is responsible for: verifying that dimensions are confirmed and correlated at the job site; obtaining information that pertains to the fabrication processes or to techniques of construction, and: coordinating the work of all subcontractors.
STEARNS & WHELER, LLC Engineers and Scientists

By TJF Date 4/10/02

Item 28I
4" RPZ in
BM

SPECIFICATION SHEET MODEL 860

FEBCO®
BACKFLOW PREVENTION

REDUCED PRESSURE ASSEMBLY

Characteristics

Physical Properties

Size of Mainline	2½", 3, 4", 6", 8", 10"
Max. Working Pressure	175 PSI (1200 KPa)
Hydrostatic Test Press.	350 PSI (2400 KPa)
Temperature Range	32° F to 140° F (0° C to 60° C)
End Connections	Flanged ANSI B16.1 Class 125

Materials

Main Valve Body	Ductile iron Grade 65-45-12
Coating	Fusion epoxy coated internal and external AWWA C550-90
Shut Off Valves	OS & Y resilient wedge gate valves AWWA C509
Trim	Bronze Alloy C83600
Elastomer Discs	EPDM
Spring	Stainless steel
Clamp	AWWA C606 (10" Only)

Application

Health Hazard

U.S. Patent No. 4,989,635

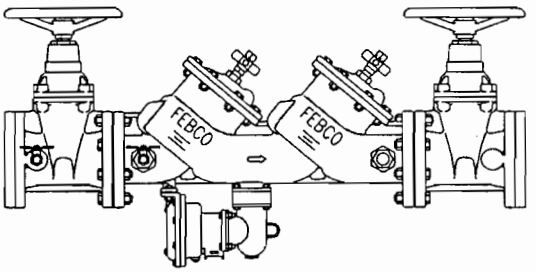

MODEL 860 REDUCED PRESSURE ASSEMBLY

Agency Compliance

- ANSI/AWWA (C511-89) - 2½" - 10"
- ASSE (Std. 1013) - 2½" - 10"
- CAN/CSA (B64.4) - 2½" - 8"
- UL Listed - 2½" - 8"
- FM Approved - 2½" - 8"
- cUL - 2½" - 8"
- Approved by the Foundation for Cross Connection Control and Hydraulic Research at the University of Southern California. - 2½" - 8"

Model 860 Flow Curves

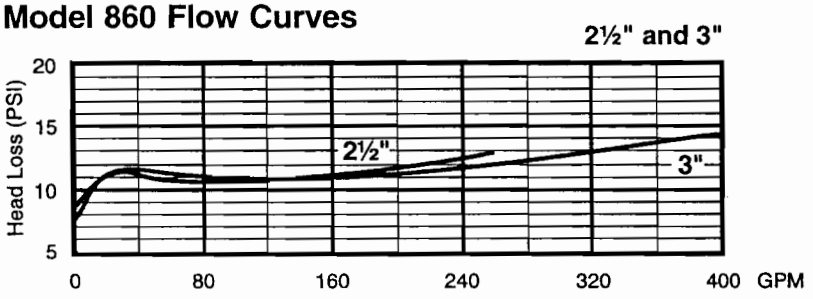

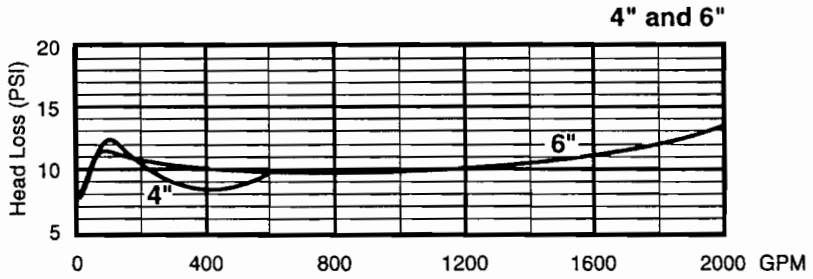

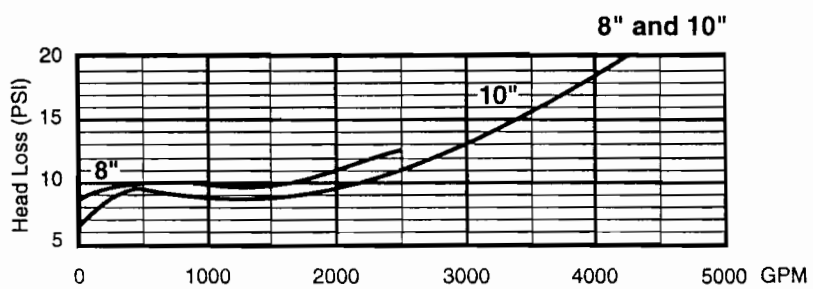

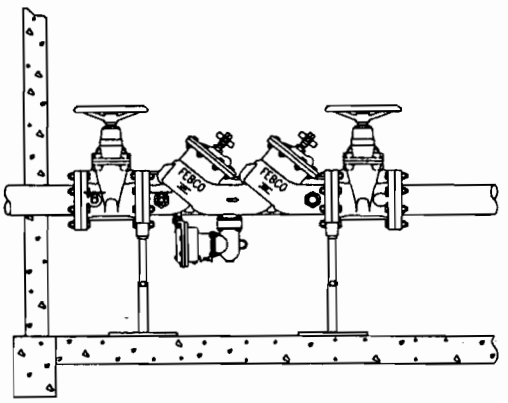

MODEL 860 INSTALLATION

860 Side View

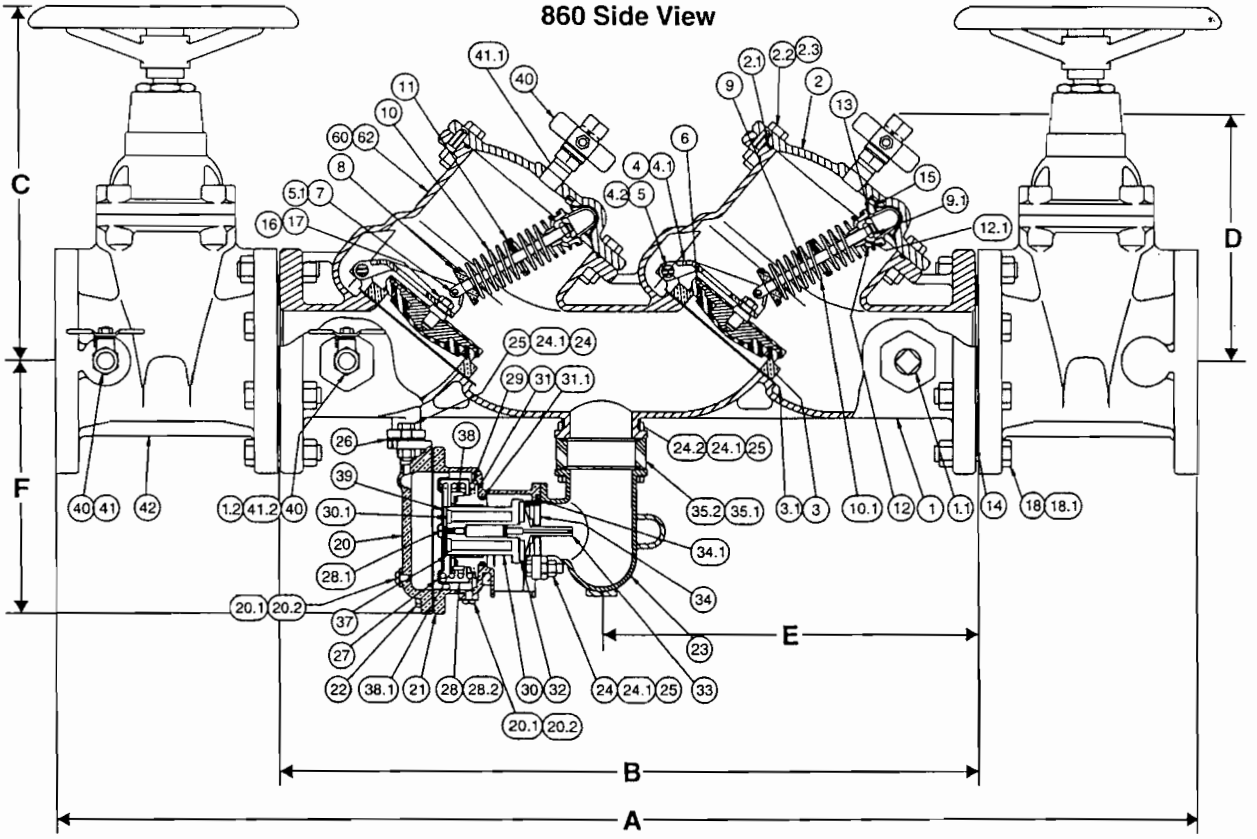

860 Top View

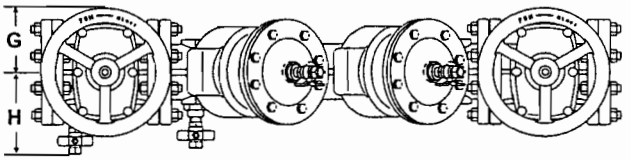

Dimensions and Weights

SIZE	U.S. - Inches (Meteric - MM) A	B	C	D	E	F	G	H	Net Wt. Lbs. (Kgs.) NRS	Net Wt. Lbs. (Kgs.) OS&Y
2½" (65)	40¾ (1035.1)	25½ (647.7)	12⅝ (320.7)	10 (254.0	12⅞ (327.0)	10 (254.0)	4½ (114.3)	7⅛ (181.0)	219 (99.3)	223 (101.2)
3" (80)	41⅞ (1063.6)	25⅝ (650.9)	12⅞ (327.0)	10 (254.0)	13 (330.2)	10 (254.0)	4½ (114.3)	7⅜ (187.3)	231 (104.8)	233 (105.7)
4" (100)	46¼ (1174.8)	28 (711.2)	14⅜ (365.1)	10⅛ (257.2)	15⅛ (384.2)	10⅛ (257.2)	5½ (139.7)	8⅛ (206.4)	317 (143.8)	334 (151.5)
6" (150)	56 (1422.4)	34¾ (882.7)	18⅞ (479.4)	12¾ (323.9)	20¾ (527.1)	11⅛ (282.6)	6½ (165.1)	9⅞ (250.8)	481 (218.2)	516 (234.1)
8" (200)	65 (1651.0)	41¾ (1060.5)	23½ (569.9)	15⅝ (396.9)	26⅞ (682.6)	12¼ (311.2)	7 (177.8)	11⅛ (282.6)	734 (332.9)	796 (361.1)
10" (250)	72⅝ (1844.7)	46⅜ (1177.9)	27½ (698.5)	15⅝ (396.9)	28¼ (717.6)	12⅜ (314.3)	9 (228.6)	12⅜ (314.3)	946 (429.1)	1008 (457.2)

Note: Dimensions are nominal. Allowances must be made for normal manufacturing tolerances.

Materials of Construction

ITEM	DESCRIPTION	MATERIALS	ITEM	DESCRIPTION	MATERIALS	ITEM	DESCRIPTION	MATERIALS
1	Body	A536 GR 65-45-12	10	Spring	A313 Type 631 SS	28	Button	A240 304 SS
1.1	Pipe Plug	Galv. Stl.	10.1	Spring 2nd Check	A313 Type 631 SS	28.1	Flow Washer	Acetal Resin
1.2	Bushing (2½"-4" Only)	Brass	10.2	Spring Shim 2nd Check	Acetal Resin	29	RV Spring	A313 Type 302 SS
2	Cover	A536 GR 65-45-12	11	Spring Guide	B130 Alloy C22000	30	RV Stem	Acetal Resin
2.1	O-Ring	EPDM ASTM D2000	12	Upr Spring Retnr	B584 Alloy C83600	31	Main Guide	B584 Alloy C83600
2.2	Cap Screw	Plated Steel	12.1	Bushing-Spr. Stem	Acetal Resin	31.1	Main Guide O-Ring	FDA EPDM
2.3	Hex Nut	Plated Steel	13	Pivot Bearing	B585 Alloy C83600	32	Seat Disc	EPDM AST D2000
3	Seat Ring	B584 Alloy C83600	14	Flange Gasket	Rubber/Fabric	33	Lower Guide	Acetal Resin
3.1	Gasket	EPDM ASTM D2000	15	Bearing Socket	Acetal Resin	34	Seat Ring	B584 Alloy C83600
3.2	Socket Head Screw	18-8-SS	16	Hex Jam Nut	18-8 SS	34.1	O-ring	FDA EPDM
3.3	Washer	304 SS	17	Washer	302 SS	35.1	O-Ring	EPDM ASTM D2000
3.4	Elastic Stop Nut	18-8-SS	18	Flange Nut	Plated Steel	35.2	Extension	Acetal Resin
4	Arm	B584 Alloy C83600	18.1	Flange Nut	Plated Steel	37	Sm. Diaphragm	Nitrile ASTM D2000
4.1	Bushing-Swing Pin	Acetal Resin	20	R.V. Cover	B584 Alloy C83600	38	Retainer	B584 Alloy C83600
4.2	Swing Pin	304 SS	20.1	Bleed Screw	18-8 SS	38.1	Slip Ring	Acetal Resin
5	Retaining Clip	302 SS	20.2	Gasket	HDPE	39	Flow Washer	Acetal Resin
5.1	Retaining Clip	302 SS	21	R.V. Body	B584 Alloy C83600	40	Ball Valve	B584 Alloy C84400
6	Check Disk	EPDM Coated GR. 45Ductile Iron with A276 type 304SS stem	22	Cover Bolt	18-8 SS	41	Nipple	Brass
			23	Elbow	A536 GR 65-45-12	41.1	Nipple	Brass
			24	RV Mtg Bolt	Plated Steel	41.2	Nipple	Brass
7	Load Pin	B150 Alloy C61300	24.1	Washer	Plated Steel	42	Gate Valve (NRS)	AWWA C509
8	Lwr Spring Retnr	B584 Alloy C83600	25	RV Mtg Nut	Plated Steel	60	Identification Plate	B36 Alloy C26000
9	Spring Stem	304 SS	26	Gasket	EPDM	62	Drive Screw	Stainless Steel
9.1	Elastic Stop Jam Nut	18-8 SS	27	Lrg. Diaphragm	Nitrile ASTM D2000	70	Clamp	AWWA C606 (10" Only)

FEBCO Backflow Prevention
P.O. Box 8070 • Fresno, CA 93747-8070
559 252-0791 • Fax: 559 453-9030 • ***www.cmb-ind.com***

CMB Industries, Inc.
A United Dominion Company

ISO 9001 Certified

Copyright 2000 CMB Industries, Inc

Milherst Construction, Inc.
P.O. Box 631
Getzville, New York 14068

Phone (716) 688-9098
Fax (716) 688-9562

Submittal No.43

Lehigh Valley RR Derailment Site

Owner NYS Department of Environmental Conservation
Bureau of Construction Services, 12th Floor
625 Broadway
Albany, NY 12233-7013

Contractor Milherst Construction, Inc

Date April 3, 2002

Item: Hot Box by Safety Cover

Specification: Metering & Backflow Prevention Equipment
Section: 11393
Page No.: 11393-4
Para. No.: 2.07 Heated Enclosure
Drawing No.:
Location: For 1", 1-1/2", 2" and 4"

Milherst Construction, Inc. certifies that all quantities, dimensions, specified performance criteria, installation requirements, materials, catalog numbers, and similar data with respect thereto have been reviewed or that each Shop Drawing or sample has been coordinated with other Shop Drawings and samples and with the requirements of the Work and Contract Documents.

By: Charles F. Kubiniec
Charles F. Kubiniec
Project Manager

heated enclosure can fit
- verify that backflow preventer, strainer, and all fittings.

~~APPROVED~~
☒ APPROVED AS CORRECTED
~~(Resubmit final copy for file)~~

☐ REVISE AND RESUBMIT BEFORE PROCEEDING
☐ NOT APPROVED

Review only for conformance with the design concept of the project and with information given in the Contract Documents. The Contractor is responsible for: verifying that dimensions are confirmed and correlated at the job site; obtaining information that pertains to the fabrication processes or to techniques of construction, and: coordinating the work of all subcontractors.
STEARNS & WHELER, LLC Engineers and Scientists

by TJF Date 4/10/02

SAFE-T-COVER™
by HydroCowl

Nashville, Tennessee
(800) 245-6333
(615) 259-4481 (FAX)

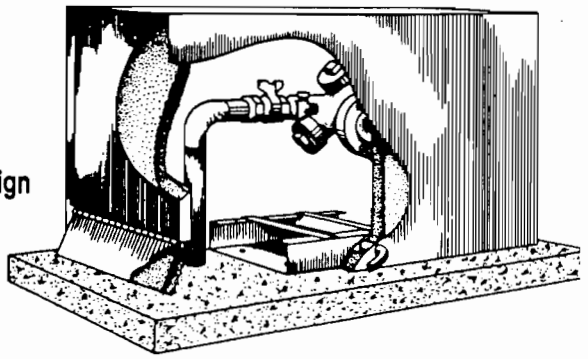
Lift-Off Design

DATA SHEET Model 100S-AL & 200S-AL "R" Value Minimum 8.0

Model No.	B.F.P. Size	Inside Width	Inside Length	Inside Height	Weights	Recommended Concrete Pad Dimensions Width	Length
1EA 100S-AL	¼"-1"	7"	32"	22"	26 lbs.	18"	43"
2EA 200S-AL	1¼"-2"	14"	42 7/8"	29"	44 lbs.	26"	55"
1EA 600-AL	4"	36"	100"	56"	364 lbs	50"	114"

28D 1" RPZ in Hot Box
28F 1½" RPZ in Hot Box
28H 2" RPZ in Hot Box
28I 4" RPZ in Hot Box

FEATURES

1) **Insulation** — Closed cell polyisocyanurate foam core."R" value 6.0 per inch.

2) **Drain** — Oversized to meet or exceed all Plumbing Codes. Drain door insulated. Opens to outside only. Closed during no-flow periods.

3) **Access** — Lift-off design for testing or maintenance.

4) **Installation** — Fast & simple, no special tools required.

5) **Durability** — Stainless steel mounting brackets.

6) **Security** — Guards against tampering or vandalism by completely enclosing device. Lockable.

7) **Movable** — Can be completely moved to another location.

SAFE-T-COVER™
by HydroCowl

Nashville, Tennessee
(800) 245-6333
(615) 259-4481 (FAX)

ASSEMBLY INSTRUCTIONS

Step 1: Center a 4"-6" thick concrete base around installed BFP.
NOTE: Place expansion material around riser pipes & place conduit for electrical power before placing concrete.

Step 2: Place mounting bracket at center line of concrete base & riser pipes (see drawing).

Step 3: Drill 1/4" holes in concrete thru holes provided in bracket. Insert hit pins (provided) & strike to secure.

Step 4: Provide ground fault interrupter device in electrical circuit per applicable codes. Install heat cable per cable manufacturer & applicable codes.

Step 5: Align enclosure over bracket. Insert SS pin (provided) thru enclosure. Fasten with bolt w/locknut (provided) or personal padlock for security.

Physical Dimensions

Model No.	B.F.P. Size	Inside Dimensions		
		Width	Length	Height
100S-AL	1/4"-1"	7"	32"	22"
200S-AL	1 1/4"-2"	14"	42 7/8"	29"

Model No.	B.F.P. Size	Outside Dimensions		
		Width	Length	Height
100S-AL	1/4"-1"	10"	35"	23 1/2"
200S-AL	1 1/4"-2"	17"	45 7/8"	30 1/2"

Recommended Concrete Base Dimensions		
Model No.	Width	Length
100S-AL	18"	43"
200S-AL	26"	55"

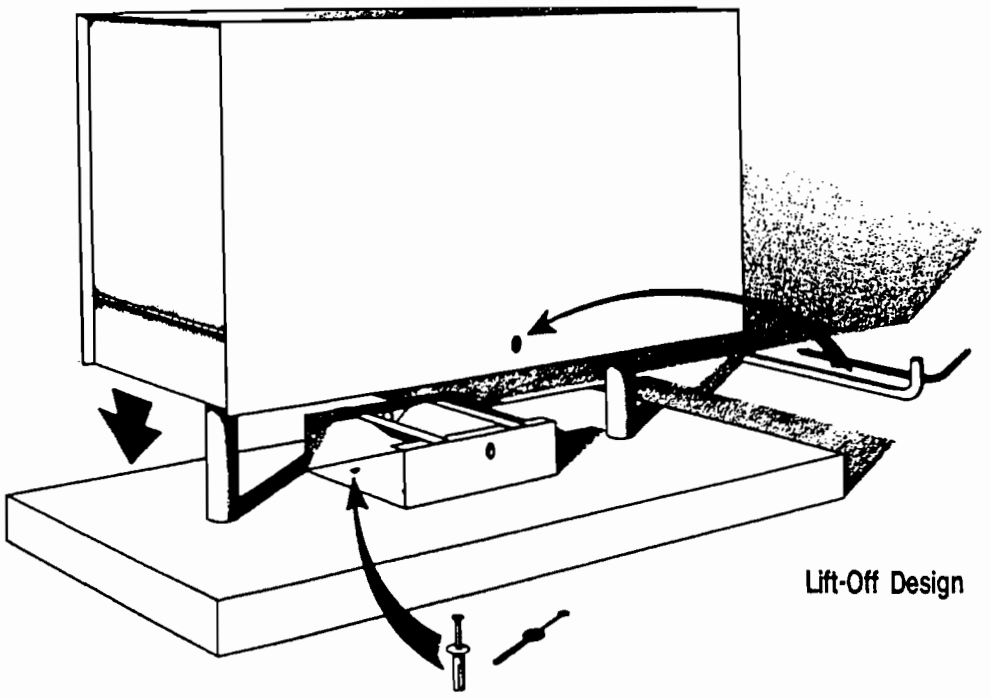

Lift-Off Design

SAFE-T-COVER™
by HydroCowl

Nashville, Tennessee
(800) 245-6333
(615) 259-4481 (FAX)

Panel Design

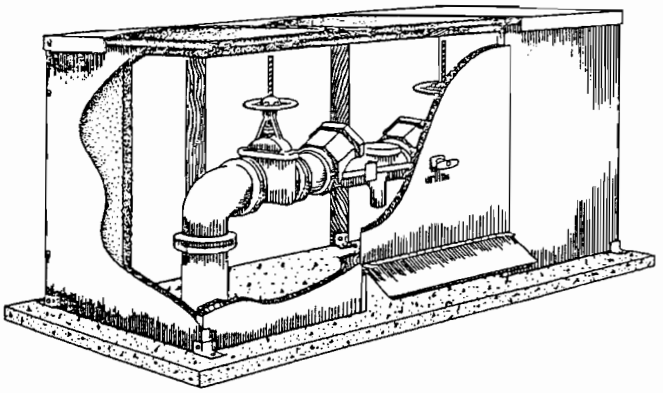

DATA SHEET Model 300-AL thru 1000TLU880-AL "R" Value Minimum 8.0

Model No.	Description	Inside Dimensions W	L	H	Shipping Weight (Lbs.)	Recommended Concrete Pad Dimensions Width	Length
300-AL	Please Call Safe-T-Cover	22"	72"	38"	168	36"	86"
300S-AL	or Safe-T-Cover Representative	22"	85"	38"	186	36"	100"
300T-AL	for Help w/Proper	22"	72"	50"	210	36"	86"
300TS-AL	Sizing of the Installation	22"	85"	50"	236	36"	100"
300LU880-AL	2 1/2" thru 3" NRS Febco Master Series	28"	32"	42"	114	42"	46"
300TLU880-AL	2 1/2" thru 3" OS&Y Febco Master Series	32"	32"	42"	130	46"	46"
400-AL	Please Call Safe-T-Cover	26"	86"	44"	211	40"	100"
400S-AL	or Safe-T-Cover Representative	26"	102"	44"	241	40"	116"
400T-AL	for Help w/Proper	26"	86"	54"	219	40"	100"
400TS-AL	Sizing of the Installation	26"	102"	54"	254	40"	116"
400LU880-AL	4" NRS Febco Master Series	32"	36"	44"	153	46"	50"
400TLU880-AL	4" OS&Y Febco Master Series	36"	36"	44"	172	50"	50"
600-AL	Please Call Safe-T-Cover	36"	100"	56"	364	50"	114"
600S-AL	or Safe-T-Cover Representative	38"	120"	56"	434	52"	134"
600T-AL	for Help w/Proper	36"	100"	64"	424	50"	114"
600TS-AL	Sizing of the Installation	38"	120"	64"	524	52"	134"
600LU880-AL	6" NRS Febco Master Series	36"	38"	48"	195	50"	52"
600TLU880-AL	6" OS&Y Febco Master Series	44"	38"	48"	212	58"	52"
800-AL	Please Call Safe-T-Cover	38"	118"	56"	406	52"	132"
800S-AL	or Safe-T-Cover Representative	38"	144"	56"	486	52"	158"
800T-AL	for Help w/Proper	38"	118"	80"	496	52"	132"
800TS-AL	Sizing of the Installation	38"	144"	80"	596	52"	158"
800LU880-AL	8" NRS Febco Master Series	44"	44"	52"	218	58"	58"
800TLU880-AL	8" OS&Y Febco Master Series	54"	44"	52"	245	68"	58"
1000-AL	Please Call Safe-T-Cover	40"	144"	78"	532	56"	160"
1000S-AL	or Safe-T-Cover Representative	40"	174"	78"	632	56"	194"
1000T-AL	for Help w/Proper	40"	144"	90"	588	56"	160"
1000TS-AL	Sizing of the Installation	40"	174"	90"	708	56"	194"
1000LU880-AL	10" NRS Febco Master Series	48"	48"	56"	280	62"	62"
1000TLU880-AL	10" OS&Y Febco Master Series	64"	48"	56"	397	78"	62"

AL-Aluminum S-Strainer T-Tall for OS&Y
* Enclosures should be ordered for size required.
Enclosures for your specification available. For information on custom designs and custom sizes, please call your area Factory Rep. or 1-800-245-6333.

FEATURES

1) **Insulation** — Closed cell polyisocyanurate foam core.
2) **Drain** — Oversized to meet or exceed all Plumbing Codes. Drain door insulated. Opens to outside only. Closed during no-flow periods.
3) **Access** — Simple panel removal on both sides for testing or maintenance.
4) **Installation** — Fast & simple, no special tools required.
5) **Durability — Engineered design of .050 aluminum.** Stainless mounting brackets.
6) **Security** — Guards against tampering or vandalism by **completely** enclosing device. Lockable (furnished). Keyed alike.
7) **Appearance** — No maintenance aluminum.
8) **Movable** — Can be easily dismantled and moved to another location.

Milherst Construction, Inc.
P.O. Box 631
Getzville, New York 14068

Phone (716) 688-9098
Fax (716) 688-9562

Submittal No.44

Lehigh Valley RR Derailment Site

Owner NYS Department of Environmental Conservation
Bureau of Construction Services, 12th Floor
625 Broadway
Albany, NY 12233-7013

Contractor Milherst Construction, Inc

Date April 3, 2002

Item: Interior Piping - Type I Copper

Specification:

Section: 15060

Page No.: 15060-4

Para. No.: 2.03 A

Drawing No.:

Location: Inside Service

Milherst Construction, Inc. certifies that all quantities, dimensions, specified performance criteria, installation requirements, materials, catalog numbers, and similar data with respect thereto have been reviewed or that each Shop Drawing or sample has been coordinated with other Shop Drawings and samples and with the requirements of the Work and Contract Documents.

By: Charles F. Kubiniec

Charles F. Kubiniec
Project Manager

☒ APPROVED
☐ APPROVED AS CORRECTED
(Resubmit final copy for file)
☐ REVISE AND RESUBMIT BEFORE PROCEEDING
☐ NOT APPROVED

Review only for conformance with the design concept of the project and with information given in the Contract Documents. The Contractor is responsible for: verifying that dimensions are confirmed and correlated at the job site; obtaining information that pertains to the fabrication processes or to techniques of construction, and: coordinating the work of all subcontractors.
STEARNS & WHELER, LLC Engineers and Scientists

By TSF Date 5/24/02

STREAMLINE® MUELLER® INDUSTRIES, INC.

COPPER TUBE PRICE SHEET

CT202
Effective February 18, 2002
(Supersedes CT1201)

Interior Work

COPPER WATER TUBE/PRICE PER FOOT

SIZE		TYPE K			TYPE L			TYPE M	DWV	NITROGENIZED® ACR/MED (Nitrogenized thru 3-1/8" Only)	
NOM	O.D.	HARD LENGTHS	SOFT COILS	SOFT LENGTHS	HARD LENGTHS	SOFT COILS	SOFT LENGTHS	HARD LENGTHS	HARD LENGTHS	TYPE K	TYPE L
1/4"	3/8"	.55	.62	.72	.48	.53	.63	—	—	.65	.56
3/8"	1/2"	.95	1.10	1.24	.72	.79	.94	.55	—	1.12	.85
1/2"	5/8"	1.10	1.24	1.43	.91	1.06	1.19	.67	—	1.29	1.07
5/8"	3/4"	1.40	1.65	1.82	1.27	1.46	1.65	.93	—	1.65	1.49
3/4"	7/8"	2.00	2.25	2.60	1.42	1.62	1.85	1.05	—	2.35	1.67
1"	1-1/8"	2.65	2.95	3.45	2.05	2.31	2.60	1.50	—	3.11	2.40
1-1/4"	1-3/8"	3.25	3.68	4.25	2.77	3.48	3.60	2.18	2.18	3.82	3.26
1-1/2"	1-5/8"	4.35	4.74	5.65	3.55	4.48	4.60	3.00	2.73	5.11	4.16
2"	2-1/8"	6.75	8.40	8.80	5.60	7.30	7.50	4.78	3.61	7.93	6.56
2-1/2"	2-5/8"	9.85	—	12.80	8.32	—	—	6.97	—	11.84	9.77
3"	3-1/8"	13.75	—	17.90	11.16	—	—	9.21	6.00	16.16	13.13
3-1/2"	3-5/8"	17.85	—	—	14.60	—	—	12.50	—	21.00	17.17
4"	4-1/8"	22.85	—	—	18.60	—	—	16.22	10.20	26.83	21.84
5"	5-1/8"	57.00	—	—	51.00	—	—	48.80	32.80	67.00	59.95
6"	6-1/8"	81.75	—	—	62.25	—	—	60.40	45.50	96.05	73.15
8"	8-1/8"	153.10	—	—	115.00	—	—	107.20	—	180.00	135.15

As Requested

REFRIGERATION SERVICE TUBE - SOFT

O.D. Size	1/8"	3/16"	1/4"	5/16"	3/8"	1/2"	5/8"	3/4"	7/8"	1-1/8"	1-3/8"	1-5/8"
50 Foot Coil Price	14.20	15.55	18.60	23.90	27.00	34.60	46.65	54.50	80.85	118.45	173.75	223.75
100 Foot Coil Price	28.40	31.10	37.20	47.80	54.00	69.20	93.30	109.00	161.70	236.90	347.50	447.50

TEMPERATURE CONTROL TUBE - LENGTHS ONLY

NOT RECOMMENDED FOR BENDING OR FORMING PURPOSES. ORDER QUANTITY IS IN 2000 FEET PER BOX INCREMENTS.

HARD

O.D.	WALL	PRICE/FT
1/4	0.025	.54

SOFT

O.D.	WALL	PRICE/FT
1/4	0.025	.66

HARD

O.D.	WALL	PRICE/FT
1/4	0.032	.64

SOFT

O.D.	WALL	PRICE/FT
1/4	0.032	.80

SUBMITTAL
MILHERST CONSTRUCTION, INC.
Job: Lehigh Valley Rail Derailment Site
Item: Interior Service Pipe
Descr: Type L Copper
Reviewed By: CFIC
Date: 5-20-02

THE ISSUANCE OF THIS PRICE LIST IS NOT AN OFFER TO SELL THE GOODS LISTED HEREIN AT THE PRICES STATED.

ORIGINATORS OF THE SOLDER-TYPE FITTING.

NOTE: Job Site pre-cleaning by others prior to installation may be required for K oxy and ACR/MED tube.

® Registered Trademark of Mueller Industries, Inc.

Milherst Construction, Inc.
P.O. Box 631
Getzville, New York 14068

Phone (716) 688-9098
Fax (716) 688-9562

Submittal No.45

Lehigh Valley RR Derailment Site

Owner NYS Department of Environmental Conservation
Bureau of Construction Services, 12th Floor
625 Broadway
Albany, NY 12233-7013

Contractor Milherst Construction, Inc

Date April 3, 2002

Item: Polyethylene Encasement

Specification:

Section: 02610
Page No.: 02610-3
Para. No.: 2.06
Drawing No.:
Location: AOBE

Milherst Construction, Inc. certifies that all quantities, dimensions, specified performance criteria, installation requirements, materials, catalog numbers, and similar data with respect thereto have been reviewed or that each Shop Drawing or sample has been coordinated with other Shop Drawings and samples and with the requirements of the Work and Contract Documents.

By: Charles F. Kubiniec

Charles F. Kubiniec
Project Manager

☒ **APPROVED**

☐ **APPROVED AS CORRECTED**
(Resubmit final copy for file)

☐ **REVISE AND RESUBMIT BEFORE PROCEEDING**

☐ **NOT APPROVED**

Review only for conformance with the design concept of the project and with information given in the Contract Documents. The Contractor is responsible for: verifying that dimensions are confirmed and correlated at the job site; obtaining information that pertains to the fabrication processes or to techniques of construction, and: coordinating the work of all subcontractors.
STEARNS & WHELER, LLC Engineers and Scientists

By TSF Date 5/24/02

REPCOR inc.
P.O. BOX 404
11518 N. PORT WASHINGTON RD. • MEQUON, WI 53092-0404
Phone 414-241-5900 • FAX 414-241-5376

1999 POLYWRAP LETTER OF COMPLIANCE

TO WHOM IT MAY CONCERN:

Our 8 mil polywrap film is manufactured of 100% polyethylene material conforming to ASTM standard specification D1248-89 Type I, Class A(natural color), Class B(colored), Class C (black), Grade E-1, tensile strength 1200 psi, elongation 300%.

ASTM D1248-89 is the specification test done to comply with ANSI/AWWA C105/A21.5-93.

We meet and exceed the above specifications.

All testing required by these standards has been conducted. These tests have been completed within the last year. All materials supplied are of the same type, quality, manufacture, and make. All polywrap is manufactured in the United States.

This Letter of Compliance is applicable only to Repcor, Inc. polywrap.

Sincerely,

David W. Eiring
President
Repcor, Inc.

SUBMITTAL #45
MILHERST CONSTRUCTION, INC.
Job: Lehigh Valley R.R. Recruitment Site
Item: Polyethylene Encasement
Descr: Poly-Tube
Reviewed By: CFK
Date: 5-20-02

Milherst Construction, Inc.
P.O. Box 631
Getzville, New York 14068

Phone (716) 688-9098
Fax (716) 688-9562

Submittal No.46

Lehigh Valley RR Derailment Site

Owner NYS Department of Environmental Conservation
Bureau of Construction Services, 12th Floor
625 Broadway
Albany, NY 12233-7013

Contractor Milherst Construction, Inc

Date April 3, 2002

Item: Individual Meter Pits

Specification:

Section: 11393

Page No.: 11393-2

Para. No.: 2.03

Drawing No.:

Location: Various as Required

Milherst Construction, Inc. certifies that all quantities, dimensions, specified performance criteria, installation requirements, materials, catalog numbers, and similar data with respect thereto have been reviewed or that each Shop Drawing or sample has been coordinated with other Shop Drawings and samples and with the requirements of the Work and Contract Documents.

By: Charles F. Kubiniec

Charles F. Kubiniec
Project Manager

- Insulation Pad is required
- Meter Pit must be 18" Ø minimum
- Must have locking lid

☐ APPROVED

☒ APPROVED AS CORRECTED
~~(Resubmit final copy for file)~~

☐ REVISE AND RESUBMIT BEFORE PROCEEDING

☐ NOT APPROVED

Review only for conformance with the design concept of the project and with information given in the Contract Documents. The Contractor is responsible for: verifying that dimensions are confirmed and correlated at the job site; obtaining information that pertains to the fabrication processes or to techniques of construction, and: coordinating the work of all subcontractors.
STEARNS & WHELER, LLC Engineers and Scientists

By TJF Date 5/24/02

MUELLER / McCullough THERMAL-COIL Meter Box ordering instructions

To order a MUELLER / McCullough THERMAL - COIL Meter Box, simply choose the options you require from the eight catagories listed below and place the option code on the appropriate line of the catalog number shown below.

If the box you need is a tandem type, please fill out the tandem information box shown below the options listing and contact the factory for price and delivery information. Phone 1-800-821-3553 or fax 1-615-895-7686.

Catalog number

(1)_____ (2)_____ (3)_____ (4)_____ (5)_____ (6)_____ (7)_____ (8)_____

Options

1 Meter size

NOTE: Meter is not furnished. Order meter separately.

Meter size	Code number
5/8"	200
5/8"x3/4"	203
3/4"	250
1"	330

2 Box style

Box style	Code number
Single meter	CS
Double meter	CD
Tandem	CT

3 Box diameter

Box diameter	Code number
15" box is for use with: 5/8, 5/8x3/4 or 3/4 single meters 5/8, 5/8x3/4 or 3/4 tandems *	15
18" box is for use with: 1" single meters 1" tandems 5/8, 5/8x3/4 or 3/4 double meters	18

4 Box depth

Depth	Code number	Depth	Code number
30"	30	66"	66
36"	36	72"	72
42"	42	78"	78
48"	48	84"	84
54"	54	90"	90
60"	60	96"	96

5 Meter inlet type

Meter inlet	Code number
Lockwing angle meter stop	L
Lockwing angle ball valve (full port)	F
Lockwing angle ball valve (reduced port)	R

6 Meter outlet type

Meter outlet	Code number
Meter coupling	A
Dual check valve	B
A.S.S.E. Dual check valve	S
A.S.S.E. Top entry vertical check	V
Lockwing angle meter stop	L
Lockwing angle ball valve (full port)	F
Lockwing angle ball valve (reduced port)	R

7 Box bottom type

Bottom type	Code number
Attached aluminum bottom	A
Less bottom	B

8 Type of box locking device (box is ordered with device to accept either a non-locking lid, center locking or side locking lid) . Lids must be ordered separately.

Lock type	Code number
Non-locking	N
Center locking	L
Side locking	S

Tandem box order information

Type of tandem device (regulator, backflow preventer etc)_____
Size_____ and length_____ of tandem device
Tandem device manufacturer's name_____ Tandem device model number _____

* NOTE: Tandem device is not included and must be purchased separately. ALSO, 3/4" tandems systems when used with certain regulators may need to be placed within a 18" box; list the regulator model when specifying this system. If an ASSE check valve or ball valve is being used in a 3/4" setting then an 18 " meter box will be required.

MUELLER Valves and Couplings used in these meter box assemblies are manufactured and tested in accordance with ANSI/AWWA C800.

MUELLER / McCULLOUGH THERMAL-COIL® METER BOX

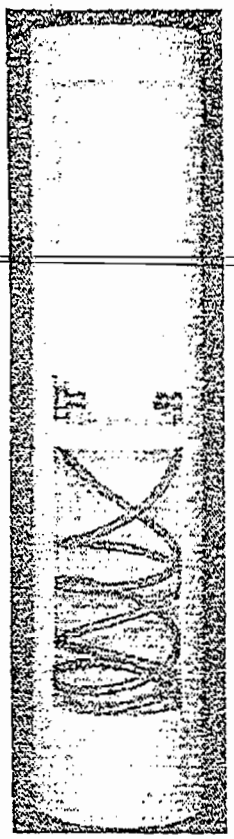

The MUELLER / McCullough THERMAL-COIL Meter Box provides a means to allow a meter to be read and maintained even though it is set deep in the ground to resist freezing. The THERMAL-COIL Meter Box is designed with the meter installed on a platform that normally sets near the bottom of the box where the ground temperature keeps it warmer. The meter and platform are connected to the service line by coils of polybutylene tubing which allow the meter and platform to be raised to the surface.

The body of the meter box is made from rigid PVC which has a high insulating "R" value to resist frost bridging" inside the box. For extremely cold climates, an optional insulating pad is available which traps the relatively warm air rising from the earth inside the box.

MUELLER / McCullough THERMAL-COIL Meter Boxes are shipped fully assembled, ready for meter installation. Their light weight saves shipping costs and makes installation a one man job in most cases. Every box is factory tested and has a 150 psig maximum working pressure rating.

MUELLER / McCullough THERMAL-COIL Meter Boxes are available for 5/8" to 1" meters. A wide variety of end connections, control valves, box depths, lids and other options provide you with the meter set you need. Due to the almost endless combination of features available, each box is custom built to your specifications. See page 8F.2 for options and ordering instructions.

Manufactured under one or more of the following: U.S. Patent No. 4,614,113; 4,813,281

MUELLER / McCullough THERMAL-COIL Meter Box Features

- ☐ Rigid .300 minimum wall PVC material holds shape and resists frost bridging
- ☐ Optional insulation pad traps earth's heat to prevent freezing in extremely cold climates
- ☐ White interior aids visibility
- ☐ Meter set is anchored to moveable platform to maintain alignment and stability
- ☐ Platform support and reinforcing ring add rigidity to box
- ☐ Polybutylene coil tubing provides low friction loss equivalent to a typical conventional meter set of the same size and depth
- ☐ Male I.P. thread inlet and outlet connections accept a variety of MUELLER Service Fittings---see section 6
- ☐ Optional aluminum bottom available
- ☐ Large selection of optional lids

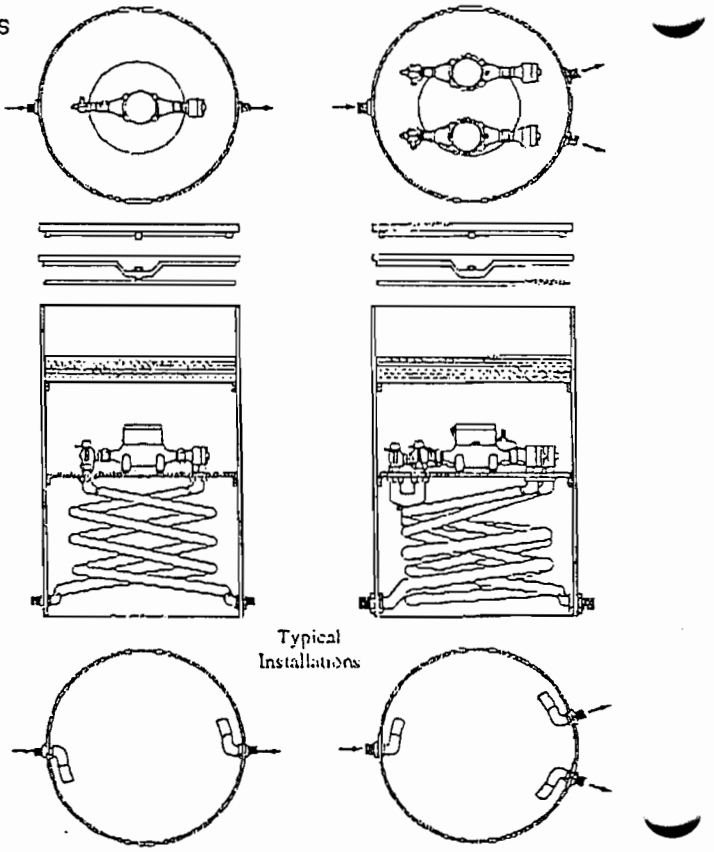

Typical Installations

MUELLER Valves and Couplings used in these meter box assemblies are manufactured and tested in accordance with ANSI/AWWA C800.

Milherst Construction, Inc.
P.O. Box 631
Getzville, New York 14068

Phone (716) 688-9098
Fax (716) 688-9562

Submittal No.47

Lehigh Valley RR Derailment Site

Owner NYS Department of Environmental Conservation
Bureau of Construction Services, 12th Floor
625 Broadway
Albany, NY 12233-7013

Contractor Milherst Construction, Inc

Date April 3, 2002

Item: Pressure Reducing Valves

Specification:

Section: 11393

Page No.: 11393-4

Para. No.: 2.06

Drawing No.:

Location: Various as Required

Milherst Construction, Inc. certifies that all quantities, dimensions, specified performance criteria, installation requirements, materials, catalog numbers, and similar data with respect thereto have been reviewed or that each Shop Drawing or sample has been coordinated with other Shop Drawings and samples and with the requirements of the Work and Contract Documents.

By: Charles F. Kubiniec

Charles F. Kubiniec
Project Manager

X [illegible]

☐ **APPROVED AS CORRECTED**
(Resubmit final copy for file)

☐ **REVISE AND RESUBMIT BEFORE PROCEEDING**

☐ **NOT APPROVED**

Review only for conformance with the design concept of the project and with information given in the Contract Documents. The Contractor is responsible for: verifying that dimensions are confirmed and correlated at the job site; obtaining information that pertains to the fabrication processes or to techniques of construction. and: coordinating the work of all subcontractors.
STEARNS & WHELER, LLC Engineers and Scientists

By TJF **Date** 5/24/02

PRESSURE REDUCING VALVE

Operation — Model Numbers: 21T - 28T

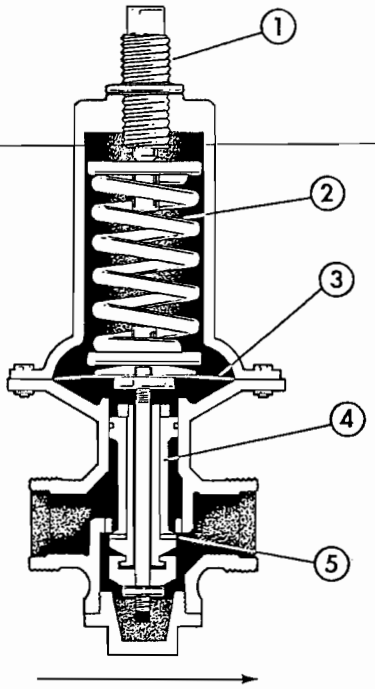

PARTS
1 Adjusting Screen
2 Adjusting Spring
3 Diaphragm
4 Stem
5 Seat Packing

Control Unit

A straight forward control mechanism can be adjusted as pressure requirements change.

1. A diaphragm, connected to a hollow stem, is held in balance by a spring load on its top side and downstream water pressure underneath.
2. Seat packing against a seat ring, connected to the same stem, holds back the high inlet pressure.

Operation

The fundamental action of these Ross Valves allows them to provide smaller systems with a smooth flow while accurately discharging reduced downstream pressure.

1. When downstream (user) pressure increases, the
   a. Pressure backs up into the valve, increasing pressure up through a hollow stem under the diaphragm, pushing the diaphragm up.
   b. Seat moves up.
   c. Valve closes accordingly.
2. When downstream (user) pressure decreases, the
   a. Pressure under the diaphragm decreases, allowing the springload pressure above to push the diaphragm down.
   b. Seat moves down.
   c. Valve opens accordingly.

Cavitation

Cavitation may occur when 2 factors, a high pressure drop combined with a low outlet pressure, are present. Cavitation damage is caused by the collapse of the small cavities formed in the fluid stream during the sudden decrease in pressure. When the valve body or pipe walls confine the fluid stream and raise the pressure above the vapor pressure of the "bubbles" minute implosions occur resulting in extremely high impact forces. Where these implosions contact the valve parts, structural damage will result. If conditions for cavitation are expected, consult a Ross engineer.

Sizing

DO NOT OVERSIZE.

Ideal Operating Position: 20% to 100% open - In this position seat erosion is at a minimum and pressure control is stable.

Consult a Ross Representative

1. For recommendations if conditions for cavitation are encountered.
2. To recommend correct valve sizing.
3. About any specific requirements.

ROSS ADVANTAGE

1. Ross valve engineers provide in depth service based on:
   a. state of the art technology and
   b. the company's experience which dates back to 1879.
2. Globe body design provides most desirable characteristics for pressure reduction.
3. Throttling action of piston gives a relatively unobstructed flow at maximum flow rates.
4. Valve operates totally on hydraulic pressure. No external controls are needed
5. Valve is completely tested and adjusted in the factory.
6. Rugged construction and simple design provide a longer valve life.
7. All parts are built and manufactured in the USA.

Additional Information

Item	Page
Dimensions - Strainers	EN-20
Head Loss Guide	EN-2
Parts List - Strainers	EN-36

Factory: Telephone (518) 274-0961
Fax (518) 274-0210

PRESSURE REDUCING VALVE

Purpose: Control outlet pressure **Model Numbers: 21T - 28T**

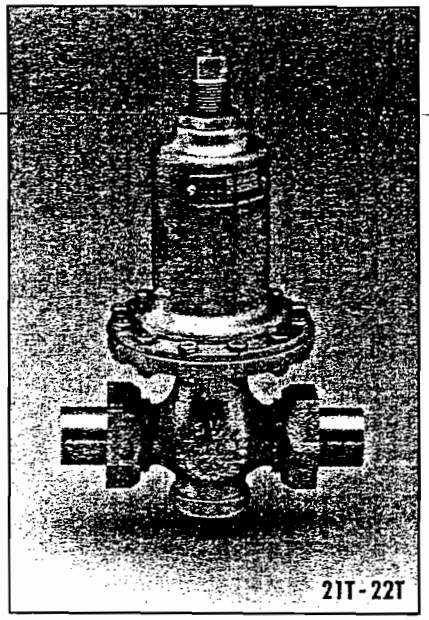

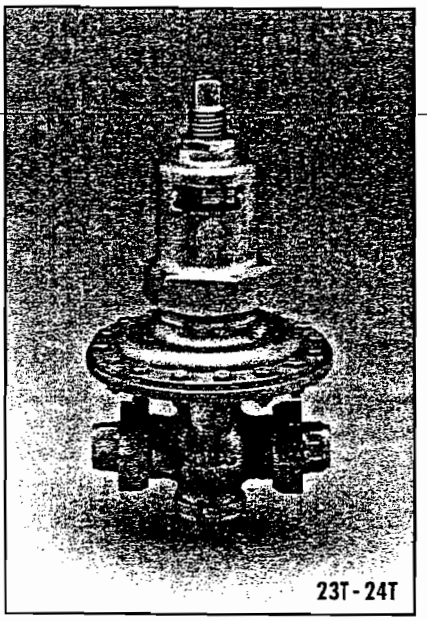

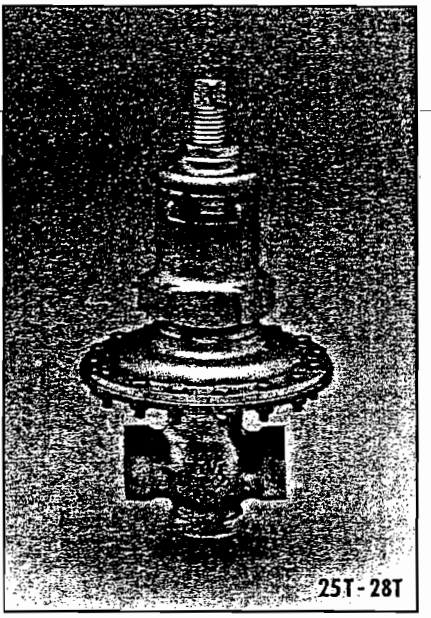

Sizes: 1/2" - 1 1/2"
Type: Direct Acting Throttling
Primarily Controlled By: Hydraulic pressure (downstream)
Located: In line
Purpose: To prevent outlet pressure from exceeding a preset maximum level.
Body: Globe
External Piping: None
Packing: Replaceable
Inlet Pressure: Maximum: 250 psi
Inlet Pressure: Minimum: 5 psi
Construction: All bronze
Connections: Union or NPT
Control Valves: None

Outlet Pressure

UNION CONNECTIONS	RANGE (PSI)
Model Number: 21T	20 - 60
Model Number: 22T	40 - 150
Model Number: 23T	1 - 15
Model Number: 24T	5 - 25
NPT CONNECTIONS	**RANGE (PSI)**
Model Number: 25T	20 - 60
Model Number: 26T	40 - 150
Model Number: 27T	1 - 15
Model Number: 28T	5 - 25

Basic Applications

1. Feed small lines with low flows.
2. Bypass units on larger valves to handle low flows.

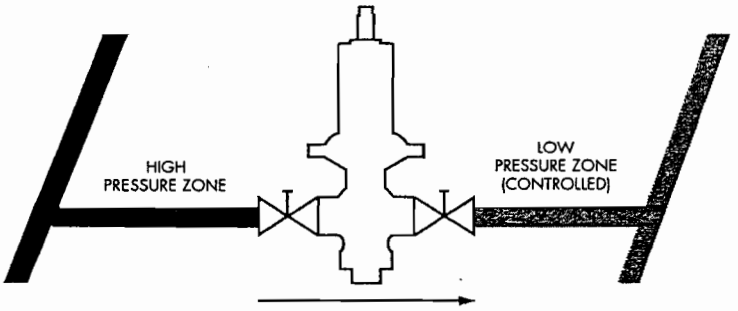

If: Supply pressure is higher than user capacity (User's demand may include quick increases and decreases.)

Ross Valve will: Pass only the quantity of water to the user, with a minimum of shock waves, to maintain a preset lower pressure. (adjustable)

#47

SUBMITTAL
MUHERST CONSTRUCTION, INC.
Job: Lehigh Valley RR Derailment Site
Item: Pressure Reducing Valves
Descr: Individual Services
Reviewed By: CFK
Date: 4-20-02

Milherst Construction, Inc.
P.O. Box 631
Getzville, New York 14068

Phone (716) 688-9098
Fax (716) 688-9562

Submittal No.48

Lehigh Valley RR Derailment Site

Owner NYS Department of Environmental Conservation
Bureau of Construction Services, 12th Floor
625 Broadway
Albany, NY 12233-7013

Contractor Milherst Construction, Inc

Date April 3, 2002

Item: Double Check Assembly

Specification:

Section: 11393

Page No.: 11393-3

Para. No.: 2.05 B

Drawing No.:

Location: Various as Required

Milherst Construction, Inc. certifies that all quantities, dimensions, specified performance criteria, installation requirements, materials, catalog numbers, and similar data with respect thereto have been reviewed or that each Shop Drawing or sample has been coordinated with other Shop Drawings and samples and with the requirements of the Work and Contract Documents.

By: Charles F. Kubiniec

Charles F. Kubiniec
Project Manager

☒ APPROVED

→ ☒ APPROVED AS CORRECTED
~~(Resubmit final copy for file)~~

☐ REVISE AND RESUBMIT BEFORE PROCEEDING

☐ NOT APPROVED

Review only for conformance with the design concept of the project and with information given in the Contract Documents. The Contractor is responsible for: verifying that dimensions are confirmed and correlated at the job site; obtaining information that pertains to the fabrication processes or to techniques of construction, and: coordinating the work of all subcontractors.
STEARNS & WHELER, LLC Engineers and Scientists

By TJF Date 5/24/02

- Must have bronze strainer installed with Double check Assembly

SPECIFICATION SHEET MODEL 805Y (3/4" - 2")

FEBCO®
BACKFLOW PREVENTION

Double Check Assembly

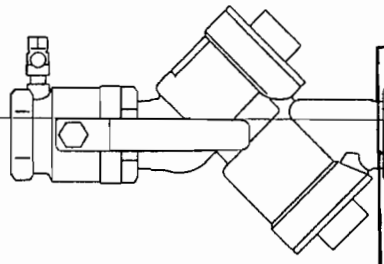

#98
SUBMITTAL
MILLHERST CONSTRUCTION, INC.
Job: Lehigh Valley RR
Brailmont Site
Item: Double Check
Descr: Assembly
Reviewed By: CFL
Date: 5-20-2002

Features

- Low head loss.
- Spring loaded "Y" type check valves.
- **Flow curve generated by the Foundation for Cross Connection Control and Hydraulic Research at the University of Southern California.**
- Simple service procedures. All internal parts are serviceable inline.
- Meets all specifications of AWWA and ASSE.
- Approved by the Foundation for Cross-Connection Control and Hydraulic Research at the University of Southern California.
- Bronze bodies, caps, shut-off valves and test cocks.

Operation

In a nonflow condition the check valves hold 1 PSI minimum in the direction of flow. In a flow condition the check valves are open, proportional to the flow demand. In a backflow condition both checks will close until the resumption of normal flow.

Specifications

The Double Check Valve assembly 3/4" through 2" shall consist of a bronze body with bronze caps. The body shall be a "Y" pattern design incorporating two spring loaded, center guided check assemblies. The assembly shall include threaded inlet and outlet, full port ball valve shut-off valves and four ball valve test cocks. All internal parts shall be of corrosion resistant materials.

All Double Check Valves shall be constructed so all internal parts can be serviced without removing the assembly from the line. Seat discs shall be reversible. The assembly shall operate when installed in any position. Double Check Valves shall be rated to 175 PSI water working pressure and water temperature from 32°F to 140°F.

The assembly shall meet the requirements of ASSE Standard 1015, AWWA Standard C510-89, CAN/CSA Certified (B64.4) and the Foundation fo Cross-Connection Control and Hydraulic Research at th University of Southern California.

Typical Applications

Double Check assemblies are used to prever backflow of pollutants that are objectionable but not toxi Double checks may be installed under continuou pressure service and may be subjected to backpressur Double Checks can be used in sprinkler irrigatio systems, fire protection without chemical additive protection of industrial plants, industrial in-plant plumbin systems and other systems requiring protection. Loc codes may vary; consult authorities for specifi approved applications.

Agency Compliance

Approved by the Foundation for Cross-Connection Control and Hydraulic Research at the University of Southern California.*

ANSI/AWWA Conformance (C510-89)

ASSE Listed (Std. 1015)

CAN/CSA Certified (B64.5)

ULC Listed (1", 1-1/2", 2")

* Valves must be supplied with resilient seated shut-off valves for USC.

Installation

Model 805Y Double Check Backflow Preventers shou be installed with adequate clearance and eas accessibility for testing and maintenance and must b protected from freezing. The assembly may be installe horizontally or vertically. Refer to local codes for specif installation requirements. Some codes may prohib vertical installation. Thermal water expansion and/ water hammer down stream of the backflow prevent can cause excessive pressure. Excessive pressu situations should be eliminated to avoid possible damag to the system and assembly.

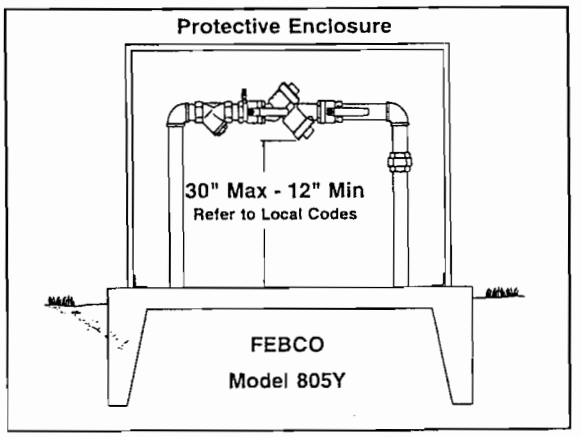

Dimensions and Weights

(U.S. - Inches)

SIZE	A	B	C	D	E	NET WT. (Lbs.)
3/4	11 1/8	6 7/8	3 1/4	3 1/4	2 3/4	7.0
1	12 5/8	6 3/4	3 1/4	3 1/4	2 7/8	7.5
1 1/2	16 5/8	10 1/8	4 5/8	4 1/2	3 1/2	17.5
2	17 1/2	10 1/8	4 5/8	4 1/2	3 1/2	20.0

(Metric - MM)

SIZE	A	B	C	D	E	NET WT. (Kgs.)
20	282.6	174.6	82.6	82.6	69.9	3.2
25	320.7	171.5	82.6	82.6	73.0	3.4
30	422.3	257.2	117.5	114.3	88.9	7.9
40	444.5	257.2	117.5	114.3	88.9	9.1

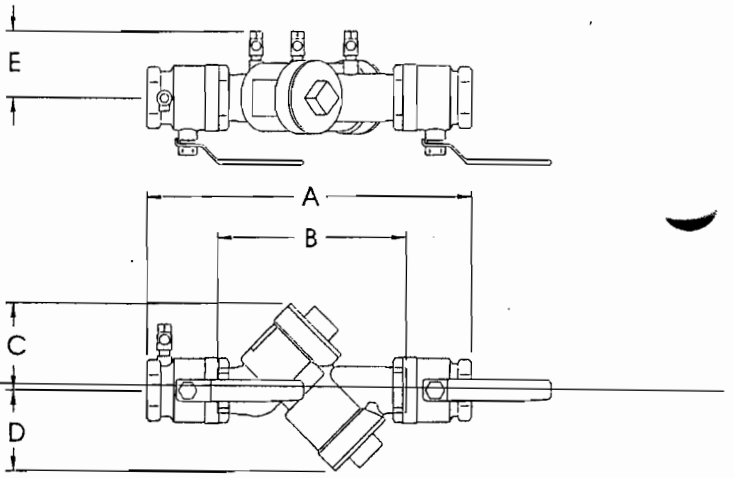

Characteristics and Materials

Maximum working pressure	175 PSI (1200 KPa)
Hydrostatic test pressure	350 PSI (2400 KPa)
Temperature Range	32°F to 140°F
Fluid	Water
End Detail	Threaded ANSI B2.1
Main Valve Body	Bronze
Elastomers	Nitrile seat discs
Springs	Stainless steel

Model 805Y Flow Curves

Documented flow curve established by the Foundation for Cross-Connection Control and Hydraulic Research at the University of Southern California.

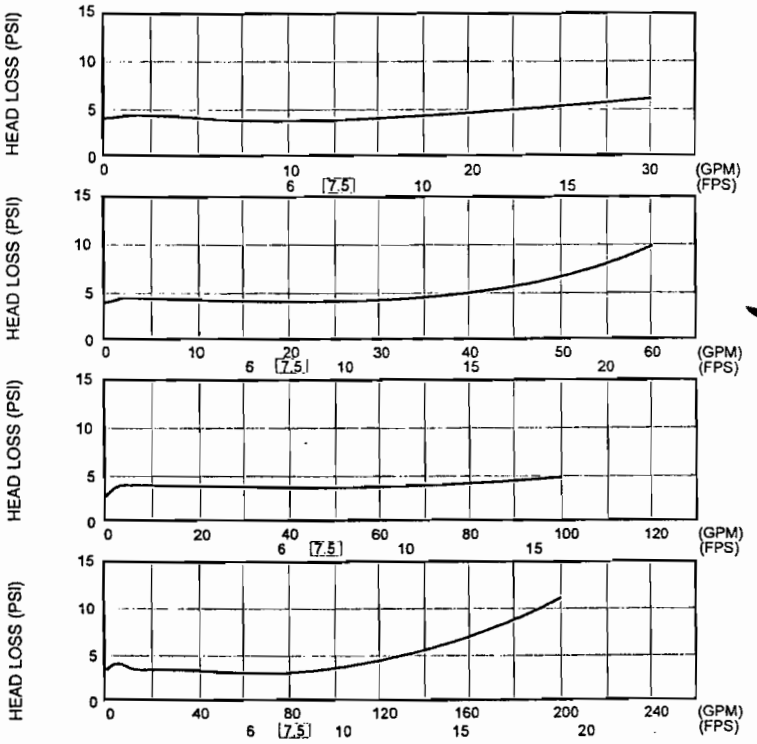

FLOW RATE (GPM AND FPS)

NOTES: 1. Velocities are calculated for flows in Schedule 40 steel pipe.
2. Typical water system flow velocities of 0 to 7.5 FPS should be used for head loss efficiency comparisons.

FEBCO Backflow Prevention
P.O. Box 8070 • Fresno, CA 93747-8070
559 252-0791 • Fax: 559 453-9030 • *www.cmb-ind.com*

SS805Y 5/99 Copyright 2000 CMB Industries, Inc.

CMB Industries, Inc.
A United Dominion Company

ISO 9001 Certified

Milherst Construction, Inc.
P.O. Box 631
Getzville, New York 14068

Phone (716) 688-9098
Fax (716) 688-9562

Submittal No.49

Lehigh Valley RR Derailment Site

Owner NYS Department of Environmental Conservation
Bureau of Construction Services, 12th Floor
625 Broadway
Albany, NY 12233-7013

Contractor Milherst Construction, Inc

Date April 3, 2002

Item: Inline Dual Check Valves

Specification:

Section: 11393

Page No.: 11393-3

Para. No.: 2.05 C

Drawing No.:

Location: Various as Required

Milherst Construction, Inc. certifies that all quantities, dimensions, specified performance criteria, installation requirements, materials, catalog numbers, and similar data with respect thereto have been reviewed or that each Shop Drawing or sample has been coordinated with other Shop Drawings and samples and with the requirements of the Work and Contract Documents.

By: Charles F. Kubiniec

Charles F. Kubiniec
Project Manager

☒ **APPROVED**

☐ **APPROVED AS CORRECTED**
(Resubmit final copy for file)

☐ **REVISE AND RESUBMIT BEFORE PROCEEDING**

☐ **NOT APPROVED**

Review only for conformance with the design concept of the project and with information given in the Contract Documents. The Contractor is responsible for: verifying that dimensions are confirmed and correlated at the job site; obtaining information that pertains to the fabrication processes or to techniques of construction. and: coordinating the work of all subcontractors.
STEARNS & WHELER, LLC Engineers and Scientists

By TJF Date 5/24/02

Series 11 • Inline Dual Check Valves

A.Y. McDonald Inline Dual Check Valves protect the public water supply by preventing the reverse flow of water from the building back into the water main. The Series 11 dual check valve is available with a wide variety of end connections to connect directly to water meters or other types of piping.

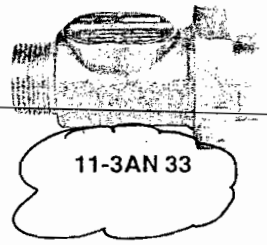

11-3AN 33

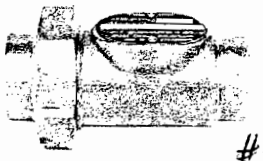

11-3FE 33

#49

SUBMITTAL

MILHERST CONSTRUCTION, INC.

Job: Lehigh Valley RR Derailment Site

Item: Dual Check Valves

Descr: Individual Services

Reviewed By: CFK

Date: 2/20/2002

11-3JF 43

11-3L2 33

MODEL NO.	METER SIZE	INLET	OUTLET
11-3AN 33	5/8	Male meter thread integral	Female meter thread union
11-3AN 34	Cross Size	Male meter thread integral	Female meter thread union
11-3AN 44	5/8x3/4 or 3/4	Male meter thread integral	Female meter thread union
11-3BA 44	5/8x3/4 or 3/4	Male meter thread union	Male meter thread integral
11-3CE 33	--	3/4" "22" compression union*	3/4" FIP integral
11-3CP 33	--	3/4" "22" compression union*	3/4" MIP integral
11-3C2 33	--	3/4" "22" compression union*	3/4" "22" compression integral*
11-3FE 11Δ	--	1/2" FIP union	1/2" FIP integral
ΔSupplied as a sales combination with two bushings			
11-3FE 33	--	3/4" FIP union	3/4" FIP integral
11-3FP 33	--	3/4" FIP union	3/4" MIP integral
11-3FT 33	--	3/4" FIP union	3/4" "T" compression integral*
11-3F2 33	--	3/4" FIP union	3/4" "22" compression integral*
11-3GE 33	--	3/4" "T" compression union*	3/4" FIP integral
11-3GP 33	--	3/4" "T" compression union*	3/4" MIP integral
11-3GT 33	--	3/4" "T" compression union*	3/4" "T" compression integral*
11-3HB 44	5/8x3/4 or 3/4	Meter swivel integral with meter support	Male meter thread union
11-3JB 44	5/8x3/4 or 3/4	Meter swivel integral	Male meter thread union
11-3JC 33	5/8	Meter swivel integral	3/4" "22" compression union*
11-3JC 43	5/8x3/4 or 3/4	Meter swivel integral	3/4" "22" compression union*
11-3JF 33	5/8	Meter swivel integral	3/4" FIP union
11-3JF 43	5/8x3/4 or 3/4	Meter swivel integral	3/4" FIP union
11-3JG 33	5/8	Meter swivel integral	3/4" "T" compression union*
11-3JG 43	5/8x3/4 or 3/4	Meter swivel integral	3/4" "T" compression union*
11-3JM 33	5/8	Meter swivel integral	3/4" MIP union
11-3JM 43	5/8x3/4 or 3/4	Meter swivel integral	3/4" MIP union
11-3JQ 33	5/8	Meter swivel integral	3/4" Male "K" union
11-3JQ 43	5/8x3/4 or 3/4	Meter swivel integral	3/4" Male "K" union
11-3KL 33	--	3/4" Male "K" integral	3/4" Female "K" union
11-3LE 33	--	3/4" Female "K" union	3/4" FIP integral
11-3LK 33	--	3/4" Female "K" union	3/4" Male "K" integral
11-3LT 33	--	3/4" Female "K" union	3/4" "T" compression integral*
11-3L2 33	--	3/4" Female "K" union	3/4" "22" compression integral*

THERMAL EXPANSION WARNING - Creating a "closed" condition in a hot water system with the installation of a non-return barrier (such as a Check Valve or Backflow Preventer between the system piping and the public supply) can result in extreme pressure rises caused by thermal expansion and/or water hammer. This thermal expansion can damage piping, valves, and other components in the system. The installation of a pressure relief device or thermal expansion tank can avoid possible damages.

*Insert stiffeners are **required** on all flexible plastic connections.

Dual Check Backflow Valves General Information

Features

- Approved by ASSE (1024), CSA B64.6.
- Can be field tested.
- Dual checks work independently of each other.
- Can be installed in either the horizontal or vertical position.
- Both checks are designed to hold 1 PSIG in the direction of flow.
- Available with a wide variety of threaded or compression connections.
- Pressure rated at 175 PSIG.
- Temperature range 34°F to 180°F.
- O-ring seal between valve body and endpiece, not dependent on cartridge.
- Valve will operate with either check removed.
- Each valve pressure tested prior to shipment.
- Available with 1/8" FIP opening on side of body for test valve.
- Cast brass body, tailpiece, union nut and cap. (ASTM B62 Alloy C83600).
- Dual checks precision molded of plastic with stainless steel spring.
- Top cap on angle valve sealed with O-ring and allows easy access to checks for inspection, maintenance or replacement.

COMPONENTS AND REPAIR PARTS

Inline

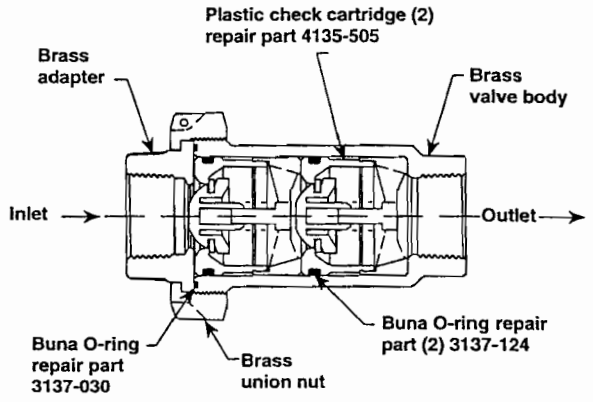

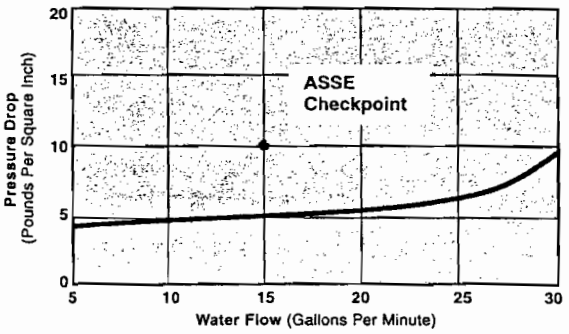

Angle

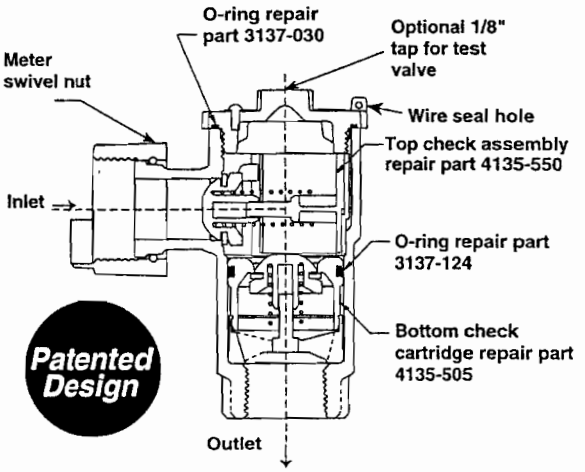

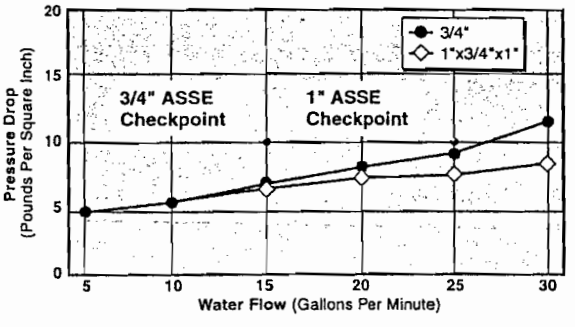

A.S.S.E. 1024 Approved

C.S.A. B64.6 Approved

A. Y. McDONALD MFG. CO. • P.O. BOX 508 • DUBUQUE, IA 52004-0508 • 319-583-7311 • TOLL FREE 800-292-2737 • FAX 800-832-9296
E-Mail sales@aymcdonaldmfg.com • WEB - www.aymcdonaldmfg.com

Milherst Construction, Inc.
P.O. Box 631
Getzville, New York 14068

Phone (716) 688-9098
Fax (716) 688-9562

Submittal No.50

Lehigh Valley RR Derailment Site

Owner NYS Department of Environmental Conservation
Bureau of Construction Services, 12th Floor
625 Broadway
Albany, NY 12233-7013

Contractor Milherst Construction, Inc

Date April 3, 2002

Item: Ball Valves

Specification:

Section: 11393

Page No.: 11393-5

Para. No.: 2.08

Drawing No.:

Location: Various as Required

Milherst Construction, Inc. certifies that all quantities, dimensions, specified performance criteria, installation requirements, materials, catalog numbers, and similar data with respect thereto have been reviewed or that each Shop Drawing or sample has been coordinated with other Shop Drawings and samples and with the requirements of the Work and Contract Documents.

By: Charles F. Kubiniec

Charles F. Kubiniec
Project Manager

☒ **APPROVED**

☐ **APPROVED AS CORRECTED**
(Resubmit final copy for file)

☐ **REVISE AND RESUBMIT BEFORE PROCEEDING**

☐ **NOT APPROVED**

Review only for conformance with the design concept of the project and with information given in the Contract Documents. The Contractor is responsible for: verifying that dimensions are confirmed and correlated at the job site; obtaining information that pertains to the fabrication processes or to techniques of construction, and: coordinating the work of all subcontractors.
STEARNS & WHELER, LLC Engineers and Scientists

By TJF **Date** 5/24/02

Submittal Data Sheet

MODEL PF171N

PROFLO™

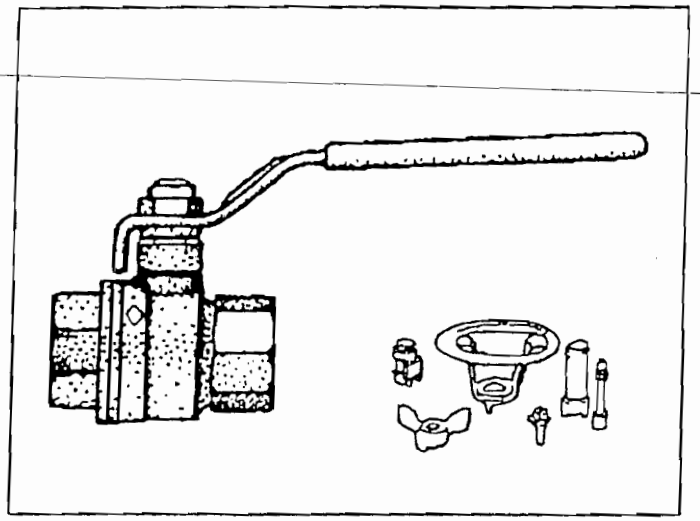

BRASS BALL VALVE

SUBMITTAL
MILHERST CONSTRUCTION, INC.
Job: Lehigh Valley R.R. Derailment site
Item: 4
Descr: 50 PSI steam Ball Valves Individual Service
Reviewed By: CFK
Date: 5-20-2002

PRODUCT FEATURES

- Brass ball valve - Full port from 1/4" to 4"
- Pressure rating 600 PSI WOG - 150 PSI steam
- Temperature to 320°F (160°C)
- Blow out proof stem, chrome plated brass ball
- PTFE seats, seals, and thrust washer
- Adjustable stem packing
- 100% electronically tested in the open and closed position at 80 PSI
- 171N - Lever handle - size 1/4" to 4"

WARRANTY AND CODES

1-year limited warranty

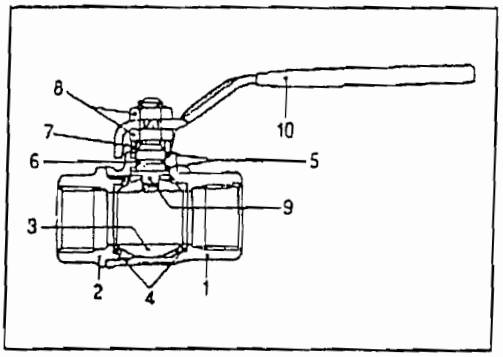

The buna "O" ring is fitted to the stem of the ball valve to prevent leakage of gas from the stem when the valves are subjected to extreme duty and low pressure applications. The valve can still be used on temperatures up to 160°C (320°F) as the "O" ring has protection from the PTFE stem seal.

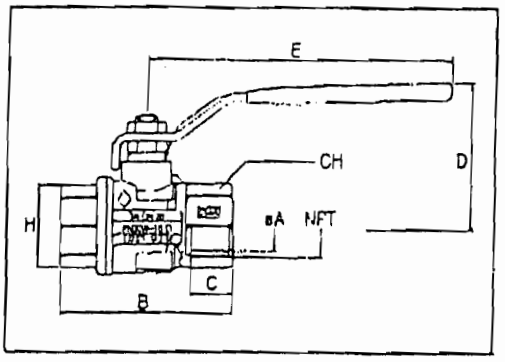

PRODUCT SPECIFICATIONS

N Pos.	PART NAME	MATERIALS	N PCS
1	BODY	Brass	1
2	END CONNECTION	Brass	1
3	BALL	Brass	1
4	SEAT MATERIALS	PTFE	2
5	STEM SEALS	PTFE	2
6	O-RING	NBR 75 Sh A	1
7	PACKING GLAND	Brass	1
8	NUT	PLATED STEEL	2
9	STEM	Brass	1
10	LEVER HANDLE	PLATED STEEL	1

SIZE DN		A	H	CH	C	B	D	E	CV KV	PSI P/N	Lbs Kg
1/4"	in	0.39	0.90	0.78	0.39	2.02	1.75	3.85	6.29	600	0.30
	mm	10	23	20	10	51.5	44.5	98	5.4	40	0.14
3/8"	in	0.39	0.90	0.78	0.40	2.02	1.75	3.85	6.99	600	0.28
	mm	10	23	20	10.3	51.5	44.5	98	6	40	0.13
1/2"	in	0.59	1.25	0.98	0.53	2.44	1.88	3.85	19	600	0.41
	mm	15	32	25	13.6	62	48	98	16.3	40	0.19
3/4"	in	0.78	1.53	1.22	0.65	2.71	2.28	4.80	31.1	600	0.67
	mm	20	39	31	14	69	58	122	29.5	40	0.31
1"	in	0.98	1.92	1.49	0.62	3.07	2.44	4.80	50.1	600	1.09
	mm	25	49	38	16.8	78	62	122	43	40	0.50
1-1/4"	in	1.25	2.32	1.88	0.69	3.42	3.07	6.02	103.7	600	2.01
	mm	32	59	48	17.3	87	78	153	89	40	0.92
1-1/2"	in	1.57	2.87	2.12	0.68	3.89	3.34	6.02	268.4	600	3.08
	mm	40	73	54	17.3	99	85	153	230	40	1.40
2"	in	1.96	3.38	2.63	0.69	4.33	3.79	6.37	309.2	600	4.70
	mm	50	86	67	17.7	110	96.5	162	265	40	1.90
2-1/2"	in	2.56	4.37	3.54	1.19	5.59	5.02	8.07	529	600	9
	mm	62	111	90	30.2	142	127.5	205	540	40	3.66
3"	in	3.15	5.35	4.13	1.31	6.45	5.45	8.07	1018	600	12.90
	mm	80	136	105	33.3	164	138.5	205	873	40	5.90
4"	in	3.94	6.35	5.12	1.55	7.60	6.34	10.23	1622	600	22.04
	mm	100	166	130	39.3	193	161	260	1390	40	10

© 2001 MarketFocus Communications, Inc

Exclusively distributed by FERGUSON

Milherst Construction, Inc.
P.O. Box 631
Getzville, New York 14068

Phone (716) 688-9098
Fax (716) 688-9562

Submittal No. 51

Lehigh Valley RR Derailment Site

Owner NYS Department of Environmental Conservation
Bureau of Construction Services, 12th Floor
625 Broadway
Albany, NY 12233-7013

Contractor Milherst Construction, Inc

Date April 3, 2002

Item: Viton Gaskets

Specification:

Section: 02610

Page No.: 02610-3

Para. No.: 2.05 A

Drawing No.:

Location: Various as Required

Milherst Construction, Inc. certifies that all quantities, dimensions, specified performance criteria, installation requirements, materials, catalog numbers, and similar data with respect thereto have been reviewed or that each Shop Drawing or sample has been coordinated with other Shop Drawings and samples and with the requirements of the Work and Contract Documents.

By: Charles F. Kubiniec

Charles F. Kubiniec
Project Manager

☒ APPROVED

☐ **APPROVED AS CORRECTED**
(Resubmit final copy for file)

☐ **REVISE AND RESUBMIT BEFORE PROCEEDING**

☐ **NOT APPROVED**

Review only for conformance with the design concept of the project and with information given in the Contract Documents. The Contractor is responsible for: verifying that dimensions are confirmed and correlated at the job site; obtaining information that pertains to the fabrication processes or to techniques of construction, and: coordinating the work of all subcontractors.
STEARNS & WHELER, LLC Engineers and Scientists

By TJF Date 6/5/02

(Revised 06/10/94)

DUCTILE IRON PIPE RESEARCH ASSOCIATION
245 Riverchase Pkwy. E., Ste. O, Birmingham, AL 35244 205/988-9870

GASKET MATERIALS USED FOR DUCTILE IRON PIPE IN WATER AND SEWAGE SERVICE

Description	Maximum Service[1,2] Temperature (°F) Push-on Joint Gaskets	Mechanical Joint Gaskets	Common Uses[3]
SBR (Styrene Butadiene)	150°	120°	Fresh Water Sea Water Sanitary Sewage
EPDM (Ethylene Propylene Diene Monomer)	250°	225°	Fresh Water Sea Water Sanitary Sewage Hot Water
Nitrile (NBR) (Acrylonitrile Butadiene)	150°	120°	Hydrocarbons Fats, Oils Greases Chemicals
Neoprene® (CR) (Polychloroprene)	200°	200°	Fresh Water Sea Water Sanitary Sewage
Viton®; Fluorel® (FKM)[4] (Fluorocarbon)	300°	225°	Hydrocarbons Acids, Vegetable Oils, Petroleum

1. Maximum service temperatures listed are intended as general guidelines for ductile iron pipe gaskets. For service temperatures greater than those listed, consult pipe manufacturer for specific recommendations.

2. Maximum service temperature is not usually a meaningful parameter for piping gaskets; however, low temperatures during pipeline installation may necessitate precautions. Consult pipe manufacturer for pertinent recommendations.

3. Water, including sewage, with low levels of the listed contaminants.

4. Consult pipe manufacturer for availability of FKM push-on gaskets.

SUBMITTAL
MILLERS CONSTRUCTION, INC.
Job: Lehigh Valley R.R. Derailment Site - Waterline
Item: Viton Gaskets
Descr: AOBE
Reviewed By: CFK
Date: 4-30-2002

51

Milherst Construction, Inc.
P.O. Box 631
Getzville, New York 14068

Phone (716) 688-9098
Fax (716) 688-9562

Submittal No. 52

Lehigh Valley RR Derailment Site

Owner NYS Department of Environmental Conservation
Bureau of Construction Services, 12th Floor
625 Broadway
Albany, NY 12233-7013

Contractor Milherst Construction, Inc

Date April 3, 2002

Item: Concrete Mix - Sidewalks

Specification:

Section: 02530

Page No.: 02530-3

Para. No.: 2.04

Drawing No.:

Location: Various as Required

Milherst Construction, Inc. certifies that all quantities, dimensions, specified performance criteria, installation requirements, materials, catalog numbers, and similar data with respect thereto have been reviewed or that each Shop Drawing or sample has been coordinated with other Shop Drawings and samples and with the requirements of the Work and Contract Documents.

By: Charles F. Kubiniec

Charles F. Kubiniec
Project Manager

☒ APPROVED

☐ **APPROVED AS CORRECTED**
(Resubmit final copy for file)

☐ **REVISE AND RESUBMIT BEFORE PROCEEDING**

☐ **NOT APPROVED**

Review only for conformance with the design concept of the project and with information given in the Contract Documents. The Contractor is responsible for: verifying that dimensions are confirmed and correlated at the job site; obtaining information that pertains to the fabrication processes or to techniques of construction, and: coordinating the work of all subcontractors.
STEARNS & WHELER, LLC Engineers and Scientists

By TJF Date 6/5/02

NORTHRUP MATERIALS
DIVISION OF DOLOMITE PRODUCTS CO., INC.

West Side Location:
58 Owens Rd. PO Box K55
Brockport, New York 14420
(585) 637-3939

East Side Location:
5929 Loomis Road
Farmington, NY 14425
(585) 924-7360

May 22, 2002

Millhurst Construction Inc.
2601 Millersport Highway
Getzville, NY 14068

Attention: Chip Kubiniek

Subject: Waterline Project
LeRoy to Caledonia

The following is the mix design and materials that we propose to furnish to the above referenced project.

MIX ID:	400
Strength @ 28 Days	4000 PSI
Cement (lbs/cy)	564 lbs
Fine Aggregate (lbs/cy)	1400 lbs
Coarse Agg,#1 Stone (lbs/cy)	1650 lbs
Air Entraining(oz/cy)	2.8 ozs
Water Reducer (oz/cy)	19.7 ozs
Water (gals/cy)	32.0 gal
Water/Cement Ratio	0.47
Designed Slump	3" + 1"
Designed Air Content	5% ∓ 2%

MATERIALS:

Cement: Type I/II Portland, supplied by LaFarge Corp.
Conforms to ASTM C-150

Fine Aggregate: Elam Sand & Gravel, Ionia, NY
NYSDOT Test No. 01 AF 146, Source No. 4-60F

Coarse Aggregate: Iroquois Rock Products, Brockport, NY
NYSDOT Test No. 00 AR 34, Source No. 4-5R

Air Entraining Agent: Daravair manufactured by W R Grace Co
Conforms to ASTM C260

Water Reducing Agent: WRDA w/Hycol manufactured by W.R.Grace Co
Conforms to ASTM C494 Type A

Respectfully Submitted,

Jerry Mancuso /afk

Jerry Mancuso
Sales Manager

SUBMITTAL 52
MILHERST CONSTRUCTION, INC.
Job: Lehigh Valley R.R. Derailment Site-Waterline
Item: Concrete Mix Design
Descr: for Sidewalks
Reviewed By: CFK
Date: 4-30-2002

Milherst Construction, Inc.
P.O. Box 631
Getzville, New York 14068

Phone (716) 688-9098
Fax (716) 688-9562

Submittal No. 53

Lehigh Valley RR Derailment Site

Owner NYS Department of Environmental Conservation
Bureau of Construction Services, 12th Floor
625 Broadway
Albany, NY 12233-7013

Contractor Milherst Construction, Inc

Date August 8, 2002

Item: Seed Mix for Uncultivated Areas

Specification:

Section: 02980

Page No.: 02980-5

Para. No.: C. Seed, 5.

Drawing No.:

Location: Various as Required

No acceptions

Milherst Construction, Inc. certifies that all quantities, dimensions, specified performance criteria, installation requirements, materials, catalog numbers, and similar data with respect thereto have been reviewed or that each Shop Drawing or sample has been coordinated with other Shop Drawings and samples and with the requirements of the Work and Contract Documents.

By: Charles F. Kubiniec

Charles F. Kubiniec
Project Manager

☒ **APPROVED**

☐ **APPROVED AS CORRECTED**
(Resubmit final copy for file)

☐ **REVISE AND RESUBMIT BEFORE PROCEEDING**

☐ **NOT APPROVED**

Review only for conformance with the design concept of the project and with information given in the Contract Documents. The Contractor is responsible for: verifying that dimensions are confirmed and correlated at the job site; obtaining information that pertains to the fabrication processes or to techniques of construction, and: coordinating the work of all subcontractors.
STEARNS & WHELER, LLC Engineers and Scientists

By TJF **Date** 8/12/02

Perennial Ryegrass, V.N.S

Grown in OR Germination 90%

Pure Seed	97 64%
Weed Seed	0.02%
Inert Matter	0 38%
Other Crop	1 96%

Noxious Weeds Poa annua 36 seeds per lb

Lot Number L169075PR Tested Feb 2002

Net Weight 50#

No. 53

SUBMITTAL

[illegible] CONSTRUCTION, INC.

Job: Water Distribution
Lehigh Valley CL Derailment Site

Item: Seed Mix

Descr: Uncultivated Areas -

Reviewed By: Charles Kubnick

Date: 8/8/2002

Milherst Construction, Inc.
P.O. Box 631
Getzville, New York 14068

Phone (716) 688-9098
Fax (716) 688-9562

Submittal No. 54

Lehigh Valley RR Derailment Site

Owner NYS Department of Environmental Conservation
Bureau of Construction Services, 12th Floor
625 Broadway
Albany, NY 12233-7013

Contractor Milherst Construction, Inc

Date August 8, 2002

Item: Seed Mix for Lawn Areas

Specification:
Section: 02980
Page No.: 02980-5
Para. No.: C. Seed, 4.a.
Drawing No.:
Location: Various as Required

Variations may be recommended per Spec.
We recommend one of the two seed mixes attached.
Both vary from the spec's but have proven successful.

Milherst Construction, Inc. certifies that all quantities, dimensions, specified performance criteria, installation requirements, materials, catalog numbers, and similar data with respect thereto have been reviewed or that each Shop Drawing or sample has been coordinated with other Shop Drawings and samples and with the requirements of the Work and Contract Documents.

By: Charles F. Kubiniec

Charles F. Kubiniec
Project Manager

☒ **APPROVED**

☐ **APPROVED AS CORRECTED**
(Resubmit final copy for file)

☐ **REVISE AND RESUBMIT BEFORE PROCEEDING**

☐ **NOT APPROVED**

Review only for conformance with the design concept of the project and with information given in the Contract Documents. The Contractor is responsible for: verifying that dimensions are confirmed and correlated at the job site; obtaining information that pertains to the fabrication processes or to techniques of construction, and: coordinating the work of all subcontractors.
STEARNS & WHELER, LLC Engineers and Scientists

By DF Date 8/12/02

LESCO INC., 15885 SPRAGUE ROAD STRONGSVILLE,OH.44136

Product: Item: 059505

**UPSTATE NY #2 SEED MIX

LOT NUMBER: 6-01-143

% PURITY	COMPONENT	% GERM	ORIGIN
24.65	ALLSPORT PERENNIAL RYEGRASS	90.00	OR
24.64	KENTUCKY BLUEGRASS 85/80	90.00	ID
24.58	CREEPING RED FESCUE	90.00	CN
24.54	LEGACY II PERENNIAL RYEGRASS	90.00	OR

OTHER INGREDIENTS

0.16 CROP SEEDS

1.43 INERT MATTER

0.00 WEED SEED

NOXIOUS WEEDS:
NONE FOUND

DATE TESTED: 2/01

NET WEIGHT: 50 LBS

AMS 835

SHIP TO: LESCO

GW

SUBSTITUTE FOR LAWN AREA'S

No. 54 Alternate 1

SUBMITTAL

MILHERST CONSTRUCTION, INC.

Job: Water Distribution Lehigh Valley C.P. Derailment Site

Item: Grass Seed

Descr: Lawn Areas.

Reviewed By: Charles Kubinec

Date: 6/8/2002

N BERGEN SPECIAL MIXTURE

BYRO7A Tested: 3-2001

Lot # PS125

Purity		Germ	Origin
49.69	KENTUCKY BLUEGRASS	85	ID
34.55	PENNLAWN RED FESCUE	85	OR
14.79	MANHATTAN 3 PERENNIAL RYEGRASS	90	OR

Noxious weeds: None Found

other crop: 0.06 inert: 0.89

weeds: 0.02 net wt.: 50 lbs.

Preferred Seed Co: 575 Kennedy Rd., Buffalo NY. 14227

SUBSTITUTE FOR LAWN AREA'S

No. 54 Alternate 2

SUBMITTAL

Water Distribution
Lehigh Valley RR Derailment Site
Grass Seed
Lawn Areas

Reviewed By: Charles Kubinec

Date: 8/8/2002

Milherst Construction, Inc.
P.O. Box 631
Getzville, New York 14068

Phone (716) 688-9098
Fax (716) 688-9562

Submittal No. 55

Lehigh Valley RR Derailment Site

Owner NYS Department of Environmental Conservation
Bureau of Construction Services, 12th Floor
625 Broadway
Albany, NY 12233-7013

Contractor Milherst Construction, Inc
Date August 8, 2002

Item: Topsoil

Specification:
Section: 02980
Page No.: 02980-3
Para. No.: 2.01 A
Drawing No.:
Location: Various as Required

Lab report indicates a variation to the Spec's
The PH is slightly high per Spec but OK per NYSDOT
The organic's are slightly low per Spec but OK per NYSDOT
This soil is typical and native to the area.
We request a variance to accept this topsoil.

Milherst Construction, Inc. certifies that all quantities, dimensions, specified performance criteria, installation requirements, materials, catalog numbers, and similar data with respect thereto have been reviewed or that each Shop Drawing or sample has been coordinated with other Shop Drawings and samples and with the requirements of the Work and Contract Documents.

By: Charles F. Kubiniec
Charles F. Kubiniec
Project Manager

☒ APPROVED
☐ APPROVED AS CORRECTED
(Resubmit final copy for file)
☐ REVISE AND RESUBMIT BEFORE PROCEEDING
☐ NOT APPROVED

Review only for conformance with the design concept of the project and with information given in the Contract Documents. The Contractor is responsible for: verifying that dimensions are confirmed and correlated at the job site; obtaining information that pertains to the fabrication processes or to techniques of construction, and: coordinating the work of all subcontractors.
STEARNS & WHELER, LLC Engineers and Scientists

By TJF Date 8/12/02

CME Associates, Inc.

Construction Materials Evaluation

LABORATORY TEST REPORT

Project Title: 2002 Laboratory Testing
Client Name:

Report No.: 7538S-06-0402
Date: 04/25/02

Our representative was on-site April 22, 2002 to sample topsoil material and returned the sample to our laboratory for testing as required. The results are as follows:

1) Material Identification (ASTM D-2488-Visual-Manual):

Sample ID	Classification	Unified Classification	Material Source	Proposed Use/Location
RL-5435	Screened Topsoil; Dark Brown SILT/CLAY, some cmf SAND	ML - Sandy Silt with Organics	On-Site Stockpile	Topsoil

2) Mechanical Analysis (ASTM C-136, D-1140):

Sieve Size	Percent Passing by Weight	
	RL5435	NYSDOT 713.01 Specification - Topsoil
3/4"	100	-
1/2"	100	-
#4	97	-
#10	94	-
#40	89	-
#100	80	-
#200 (wash)	69	20 - 80

3.) Topsoil Analysis:

	RL-5435	NYSDOT Spec. Topsoil
pH Determination:	7.1	5.5 - 7.6
Organic Matter:	4.6%	2% - 20%

The above sample meets specifications for Topsoil as per NYSDOT 713.01.

Please feel free to contact our office should you have any questions.

Respectfully submitted:

CME ASSOCIATES, INC.

Robert V. Knowles, P.E.
Branch Manager

No. 55

SUBMITTAL
MILHERST CONSTRUCTION, INC.
Job: Water Distribution
Item: Lehigh Valley RR Derailment
Descr: Topsoil for
Restoration
Reviewed By: Charles F. Kabenice
Date: 8/6/2002

Milherst Construction, Inc.
P.O. Box 631
Getzville, New York 14068

Phone (716) 688-9098
Fax (716) 688-9562

Submittal No. 56

Lehigh Valley RR Derailment Site

Owner NYS Department of Environmental Conservation
Bureau of Construction Services, 12th Floor
625 Broadway
Albany, NY 12233-7013

Contractor Milherst Construction, Inc

Date August 8, 2002

Item: Fertilizer

Specification:
Section: 02980
Page No.: 02980-4
Para. No.: B. 1. B.
Drawing No.:
Location: Various as Required

Spec's request 19-19-19 or others provided the spreading rate will be adjusted to provide minimum nitrogen.
We will adjust to provide same.

Milherst Construction, Inc. certifies that all quantities, dimensions, specified performance criteria, installation requirements, materials, catalog numbers, and similar data with respect thereto have been reviewed or that each Shop Drawing or sample has been coordinated with other Shop Drawings and samples and with the requirements of the Work and Contract Documents.

By: Charles F. Kubiniec
Charles F. Kubiniec
Project Manager

☒ **APPROVED**

☐ **APPROVED AS CORRECTED**
(Resubmit final copy for file)

☐ **REVISE AND RESUBMIT BEFORE PROCEEDING**

☐ **NOT APPROVED**

Review only for conformance with the design concept of the project and with information given in the Contract Documents. The Contractor is responsible for: verifying that dimensions are confirmed and correlated at the job site; obtaining information that pertains to the fabrication processes or to techniques of construction, and: coordinating the work of all subcontractors.
STEARNS & WHELER, LLC Engineers and Scientists

By TJF Date 8/12/02

16-25-13

0 88685 41464 0

STARTER FERTILIZER

contains POLY-X-PRO

GUARANTEED ANALYSIS

Total Nitrogen (N)	16%
4.8% Ammoniacal Nitrogen	
11.2% Urea Nitrogen*	
Available Phosphate (P_2O_5)	25%
Soluble Potash (K_2O)	13%
Total Sulfur (S)	2.0%
2.0% Combined Sulfur (S)	

Nutrient Sources: Ammonium Phosphate, Sulfur Coated Urea, Muriate of Potash.

Chlorine (Cl) not more than 11.0%

11.2% Slowly Available Nitrogen from Sulfur Coated Urea. *From POLY-X-PRO F899

41464

Basis 1# P (.64# N) per 1000 sq. ft. - one application.

1000 sq. ft.	1 bag covers	ton covers	acre rate
4.0 lbs.	12,500 sq. ft.	11.5 acres	174 lbs.

NOTE: Supplemental applications of lawn fertilizer are needed to achieve a minimum 1 pound nitrogen per 1000 sq. ft.

No. 56

SUBMITTAL

MILHENT CORPORATION

Job: Water Distribution Lehigh Valley RR Derailment Project

Item: Fertilizer for

Descr: Lawns + Fields

Reviewed By: Charles F. Kulewicz

Date: 8/8/2002

Milherst Construction, Inc.
P.O. Box 631
Getzville, New York 14068

Phone (716) 688-9098
Fax (716) 688-9562

Submittal No. 57

Lehigh Valley RR Derailment Site

Owner NYS Department of Environmental Conservation
Bureau of Construction Services, 12th Floor
625 Broadway
Albany, NY 12233-7013

Contractor Milherst Construction, Inc

Date September 19, 2002

Item: Expansion Tanks

Specification: Not included in original Specifications

Section:

Page No.:

Para. No.:

Drawing No.:

Location:

Milherst Construction, Inc. certifies that all quantities, dimensions, specified performance criteria, installation requirements, materials, catalog numbers, and similar data with respect thereto have been reviewed or that each Shop Drawing or sample has been coordinated with other Shop Drawings and samples and with the requirements of the Work and Contract Documents.

By: Charles F. Kubiniec

Charles F. Kubiniec
Project Manager

☒ **APPROVED**

☐ **APPROVED AS CORRECTED**
(Resubmit final copy for file)

☐ **REVISE AND RESUBMIT BEFORE PROCEEDING**

☐ **NOT APPROVED**

Review only for conformance with the design concept of the project and with information given in the Contract Documents. The Contractor is responsible for: verifying that dimensions are confirmed and correlated at the job site; obtaining information that pertains to the fabrication processes or to techniques of construction, and: coordinating the work of all subcontractors.
STEARNS & WHELER, LLC Engineers and Scientists

By TSF Date 9/23/02

AMTROL Expansion Tanks

TABLE OF MODELS

Tank Name	Model No.	Application	Standard Factory Air Charge	Maximum Working Pressure	Maximum Operating Temperature
EXTROL	15	Closed heating systems. Do not use with potable water.	12 p.s.i.	100 p.s.i.	240°F
	30				
	60				
	90				
SX EXTROL	SX-30V				
	SX-40V				
	SX-60V				
	SX-90V				
	SX-110V				
	SX-160V				
EXTROL Combination Packages	1500				
	3000				
	6000 (1¼)				
	6000 (1½)				
	6000 (2)				
FILL-TROL	109	Closed heating systems where added filling control is needed.			
	110				
	111				
	112				
FILL-TROL Combination Packages	109-P				
	110-P				
	111-P				
SOLAR EXTROL*	S-15	Solar powered closed loop heating systems.	30 p.s.i.	100 p.s.i.	300°F
	S-30				
	S-60				
	S-90				
	S-SX-30V				
	S-SX-40V				
	S-SX-60V				
THERM-X-TROL**	ST-5	Potable hot water or open heating systems, with fresh water make up. 27 additional sizes/models available.	40 p.s.i.	150 p.s.i.	200°F
	ST-12			150 p.s.i.	
	ST-28V			150 p.s.i.	
	ST-30V			100 p.s.i.	
	ST-42V			100 p.s.i.	

*For further information on AMTROL tanks for solar systems, see the SOLAR EXTROL brochure. All tanks employ EPDM diaphrams; compatible with most solar solutions except oil based liquids. Consult factory for advice on solar fluid compatability.

**For further information on AMTROL tanks for potable hot water systems see the THERM-X-TROL brochure, Form No. RHP-12-112-2A

AMTROL INC.

WEST WARWICK, RI 02893

Printed in U.S.A.

Backflow Preventer Reports

Bureau of Public Water Supply Protection

# of Backflow Prevention Device

For the year 2003

☑ Initial test - *Complete entire form*

☐ Annual test - *Complete Part A only*

PART A Please use a separate form for each device.

Water Supply	Account No.	County	Block	Lot
Monroe County W.T. Auth.		Genesee		

Facility Name: Northwoods Sportsmans Club

Address: 8103 Gulf Rd (street) Lakeville (city) NY (zip) 14482

Location of Device: Basement - East Wall

Device Information	Manufacturer	Type	Model	Size (in inches)	Serial Number
	Febco	☑ RPZ ☐ DCV	860	1½	03866

	Check Valve No. 1	Check Valve No. 2	Differential Pressure Relief Valve	Line Pressure 62 psi
Test before repair	Leaked ☐ Closed tight ☑ Pressure drop across first check valve 6.5 psid	Leaked ☐ Closed tight ☑	Opened at 3.5 psid	Date 12 25 03 (m d y)
Describe repairs and materials used				Repaired by Name _____ Lic # _____ Date repaired ☐☐ ☐☐ ☐☐ (m d y)
Final test	Closed tight ☐ Pressure drop across first check valve _____ psid	Closed tight ☐	Opened at _____ psid	Date ☐☐ ☐☐ ☐☐ (m d y)

Water Meter Number | Meter Reading | Type of Service: (check one) ☑ Domestic ☐ Fire ☐ Other _____

Remarks (Describe deficiencies: bypasses, outlets before the device, connections between the device and point of entry, missing or inadequate airgap, etc.)

Certification: This device ☑ meets, ☐ does NOT meet, the requirements of an acceptable containment device at the time of testing

I hereby certify the foregoing data to be correct.

Print Name	Certified Tester No.	Signature	Expiration Date
Carl Fisher	02612	Carl Fisher	10 13 03

Property owner's (or owner's agent) certification that test was performed:

Print Name	Title	Signature	Telephone
ROBERT E. COOK	J&J CEO	Robert E. Cook	(716) 768-6110

PART B Certification that installation is in accordance with the approved plans. (To be completed by the design engineer or architect or water supplier.)

I hereby certify that this installation is in accordance with the approved plans.

NYS DOH Log # 16304

Name	Title	Date (m d y)
C Michael Elliott	Director, Waterworks	04 21 03

License Number 55513 | Phone (315) 655-8161

Representing Stearns + Wheler, LLC

Address One Remington Park Drive

City Cazenovia | State NY | Zip 13035

Signature

Describe minor installation changes

NOTE: Send one completed copy to the designated health department representative and one copy to the water supplier within 30 days of testing the device.

DOH-1013 (9/91) **Notify owner and water supplier immediately if device fails test and repairs cannot immediately be made.**

STATE OF NEW YORK
DEPARTMENT OF HEALTH

RECEIVED
STEARNS & WHELER L.L.C.
FEB 24 2003

Flanigan Square, 547 River Street, Troy, New York 12180-2216

Antonia C. Novello, M.D., M.P.H., Dr.P.H.
Commissioner

Dennis P. Whalen
Executive Deputy Commissioner

February 18, 2003

Mr. Angelo J. Steffenella
Northwoods Sportsmen's Club
8402 Gulf Road
LeRoy, NY 14482

Re: Log No. 16304
Approval of Plans
1 ½" RPZ in Heated Enclosure
Northwoods Sportsmen's Club
8402 Gulf Road
LeRoy, Genesee County

Dear Mr. Steffenella:

The plans and specifications for the above referenced backflow prevention project have been reviewed and approved by this office subject to the following Conditions of Approval:

A. THAT the proposed works be constructed in complete conformity with the plans and specifications approved this day or approved amendments thereto.

B. THAT any connection made prior to the approved backflow prevention device(s) shall render this approval void.

C. THAT within 45 days of installation, the following steps must be taken: (1) The approved device(s) must be tested by a NYSDOH certified backflow prevention device tester; (2) The completed installation must be certified by the design engineer, architect or water supplier; and (3) The attached form DOH 1013 must be completed and returned to the water supplier.

D. THAT a NYSDOH certified backflow prevention device tester test the approved backflow prevention device(s) at least annually and report the results to the water supplier.

A copy of the approved plans and specifications is being retained in our files, and the remaining copies are being sent to the local health department, the water supplier and your engineer. If you have any questions, please contact this office at (518) 402-7676.

Sincerely,

Michael J. Montysko, P.E.
Chief, Design Section
Bureau of Public Water Supply Protection

SM/bs
cc: Genesee County Health Department, Attn: Mr. Guerin
Monroe County Water Authority, Attn: Mr. Stein
Stearns & Wheler, LLC

Acct: 144169

NEW YORK STATE DEPARTMENT OF HEALTH
Bureau of Public Water Supply Protection

Application For Approval of Backflow Prevention Devices

PRINT OR TYPE ALL ENTRIES EXCEPT SIGNATURES
Please complete items 1 through 12a + Block and Lot Numbers

Block #	Lot #	FOR DEPARTMENT USE ONLY Log No. 6304

1. Name of Facility: NORTHWOODS SPORTSMEN'S CLUB
2. City, Village, Town: TOWN
3. County: GENESEE
4. Location of Facility — street: 8402 GULF ROAD; city: LeROY; state: NY; zip: 14482
4a. Phone Numbers: 585 - 768 - 6110
Contact Person: DAN MILLER
5. Approx. Location of Device(s): within heated enclosure NORTH OF BUILDING
6. Mfg. Model #: WATTS 909MIQT-S
Size of Device(s): 1 1/2"

# of Fire Services	# of Domestic Services	# of Combined Services	Total # of Services	Total # of Buildings
0	1	0	1	1

7. Name of Owner: ANGELO J. STEFFENELLA
Title: PRES.
Phone Number: 585-768-6110
Full Mailing Address — street: 8402 GULF ROAD; city: LeROY; state: NY; zip: 14482
Owner's Signature: Angelo J. Steffenella Date: 10/25/2002 (m d y)

8. Nature of works
- [x] Initial Device Installation
- [ ] Replace Existing Device

8a.
- [ ] New Service
- [x] Existing Service

8b.
- [ ] New Building
- [x] Existing Building
- [ ] Major Renovation

9. Name of Design Engineer or Architect: STEARNS & WHEELER, LLC
Address — street: 1 REMINGTON PARK DRIVE; city: CAZENOVIA; state: NY; zip: 13035

University of the State of New York — C. MICHAEL ELLIOTT — No. 055513 — Professional Engineer

signature

Original ink signature and seal required on all copies.

10. NYS License #: 055513
- [x] PE
- [ ] RA
- [ ] Other

10a. Telephone Number(s): 315-655-8161

Date: 10/29/02 (m d y)

11. Water System Pressure (psi) at Point of Connection	12. Estimate Installation Cost	12a. Estimate Design Cost
Max 55 Avg 54 Min 45	$3000	$2000

13. Degree of Hazard
- [x] Hazardous
- [ ] Aesthetically Objectionable

List of processes or reasons that lead to degree of hazard checked: Boiler heats facility and service line to outside bathrooms are filled with glycol

14. Public water supply name: Monroe County Water Authority
Name of supplier's designated representative: Thomas K. Stein
Mailing address — street: 475 Norris Drive; city: Rochester; state: NY; zip: 14610
Title: Construction Engineer
Telephone No. (585) 442-2000
Signature* Thomas K. Stein Date: 12/23/02 (m d y)
* Your signature endorses proposal

Note: All applications must be accompanied by plans, specifications and an engineer's report describing the project in detail. The project must first be submitted to the water supplier, who will forward it to the local public health engineer. This form must be prepar in quadruplicate with four copies of all plans, specifications and descriptive literature.

Re-Application for Approval of Backflow Prevention Device For Monroe County Water Authority

Northwoods Sportsmen Club

Water Distribution System
Lehigh Valley Railroad Derailment Site
New York State
Department of Environmental Conservation

Stearns & Wheler, LLC
File No. 10209
November 2002

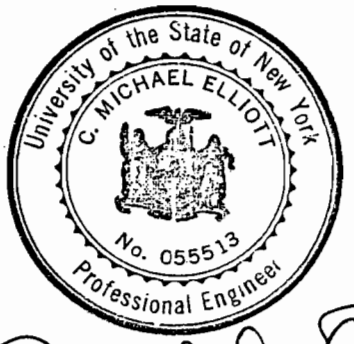

Table of Contents

Engineering Report
Site and Building Plan
Backflow Preventer Installation
Department of Health Form 347

ENGINEER'S REPORT

OWNER

NAME:	Northwoods Sportsmen Club
ADDRESS:	8402 Gulf Road LeRoy, NY 14482
CONTACT PERSON:	Angelo J. Steffenella
TELEPHONE:	585-768-6110

SITE PLAN ENGINEER (PREPARES SITE PLAN)

NAME:	Stearns & Wheler, LLC
ADDRESS:	One Remington Park Drive Cazenovia, NY 13035
CONTACT PERSON:	Titus J. Falkenburg, P.E.
TELEPHONE:	315-655-8161

MECHANICAL ENGINEER (PREPARES INSIDE PLUMBING)

NAME:	Stearns & Wheler, LLC
ADDRESS:	One Remington Park Drive Cazenovia, NY 13035
CONTACT PERSON:	Titus J. Falkenburg, P.E.
TELEPHONE:	315-655-8161

CONTRACTOR:

NAME:	Milherst Construction, Inc.
ADDRESS:	P.O. BOX 631 2601 Millersport Highway Getzville, NY 14068-0631
CONTACT PERSON:	Charles Kubiniec
TELEPHONE:	716-688-9098

ENGINEER'S REPORT

FOR APPROVAL OF REDUCED PRESSURE ZONE BACKFLOW PREVENTER

Please complete this report and include it in your Final Design for Backflow approval.

Please answer either YES or NO to questions 1 - 6 Below.

	Y	N	
1.	☐	☒	Does the Facility require a continuous water supply? (if YES dual Backflow Preventers will be required)
2.	☐	☒	Is the Facility located within the 100-year flood plain? (A Reduced Pressure Zone (RPZ) Backflow prevention device must be installed 12-inches above the 100-year flood plain)
3.	☒	☐	Will the area where the Backflow Preventer is located, be adequately heated to prevent freezing?
4.	☒	☐	Will the area where the backflow Preventer is located, be adequately lighted to allow for maintenance and testing of the device(s).
5.	☒	☐	Will the Backflow Preventer be located in a vault, basement and/or located below grade where a drain is necessary to accommodate the relief port? (If Yes, Please answer Questions 5A).
5A.	☐	☒	Will the RPZ Drain to a crock or other holding container which will require pumping to final discharge? If Yes, Please describe:____ _____
6.	☒	☐	Is the drain for the RPZ Relief Port adequately sized to accommodate a full discharge (dump) from the relief port without flooding the surrounding area.

7. Pleased indicate to where does the RPZ Relief Port discharge (Drain)?

- ☐ Sanitary Sewer Lateral
- ☐ Storm Sewer Lateral
- ☒ Outside Grade
- ☐ Private Septic System
- ☐ Other _____

8. What is the water pressure (psi) at the facility upstream and downstream of the proposed backflow prevention device(s) both domestic and fire during maximum flow conditions.

Domestic RPZ ☐NA (Check if Domestic Service has been determined to be non-hazardous)

60 Upstream (PSI) Make & Model No. of Proposed RPZ WATTS #909M1QT-S

50 Downstream (PSI) Size of Backflow Preventer 1½"

Maximum Domestic Demand (GPM) = 15

Fire Service RPZ ☒NA (Check if there is no Fire Service or if the Fire Service has been determined to be non-hazardous

____ Upstream (PSI) Make & Model No. of Proposed RPZ _____

____ Downstream (PSI) Size of Backflow Preventer _____

Maximum Fire Flow Demand (GPM) = ____

9. Date of Completion of this report 10/29/2

Use Box Below for Engineer's Stamp and Signature

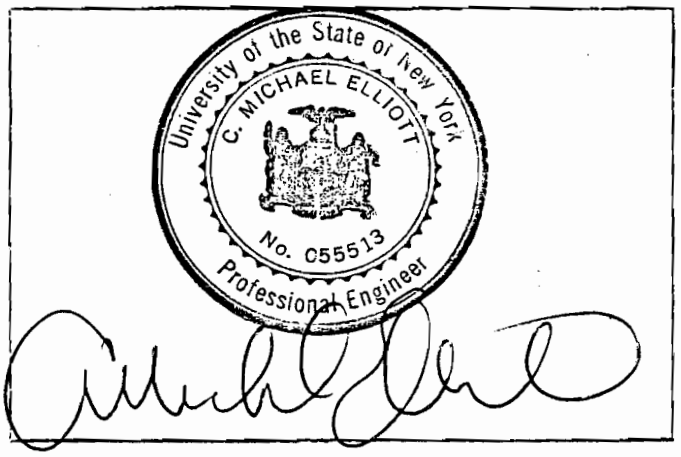

CROSS CONNECTION CONTROL

SITE INSPECTION REPORT

FACILITY NAME Northwoods Sportsman Club ACCOUNT _____

STREET 8402 Gulf Rd TOWN _____

CITY LeRoy, NY 14482 PHONE _____

INSPECTED BY _____ DATE 4-19-99

DOMESTIC SERVICE: SIZE — METER S/N —

FIRE SERVICE: SIZE NO CLASS N/A PRIVATE HYDRANTS No

SIAMESE CONNECTION N/A AUXILIARY SUPPLY well

WATER USAGE Bathrooms, Kitchen, outside bathrooms, hose bib

HEATING SYSTEM Oil Fired Boiler,

COOLING SYSTEM NO

SEWAGE SYSTEM Seat

LAWN IRRIGATION SYSTEM NO

DETERMINATION: HAZARDOUS ✓ NON-HAZARDOUS _____

REASONS FOR DETERMINATION Boiler, & service line to outside bathrooms, Alcohol or Glycol Filled

REMARKS service line to bathroom. Possible alcohol or antifreeze

PERSON CONTACTED Dan Miller

ENTERED IN COMPUTER: BY _____ DATE _____

March 1, 1993

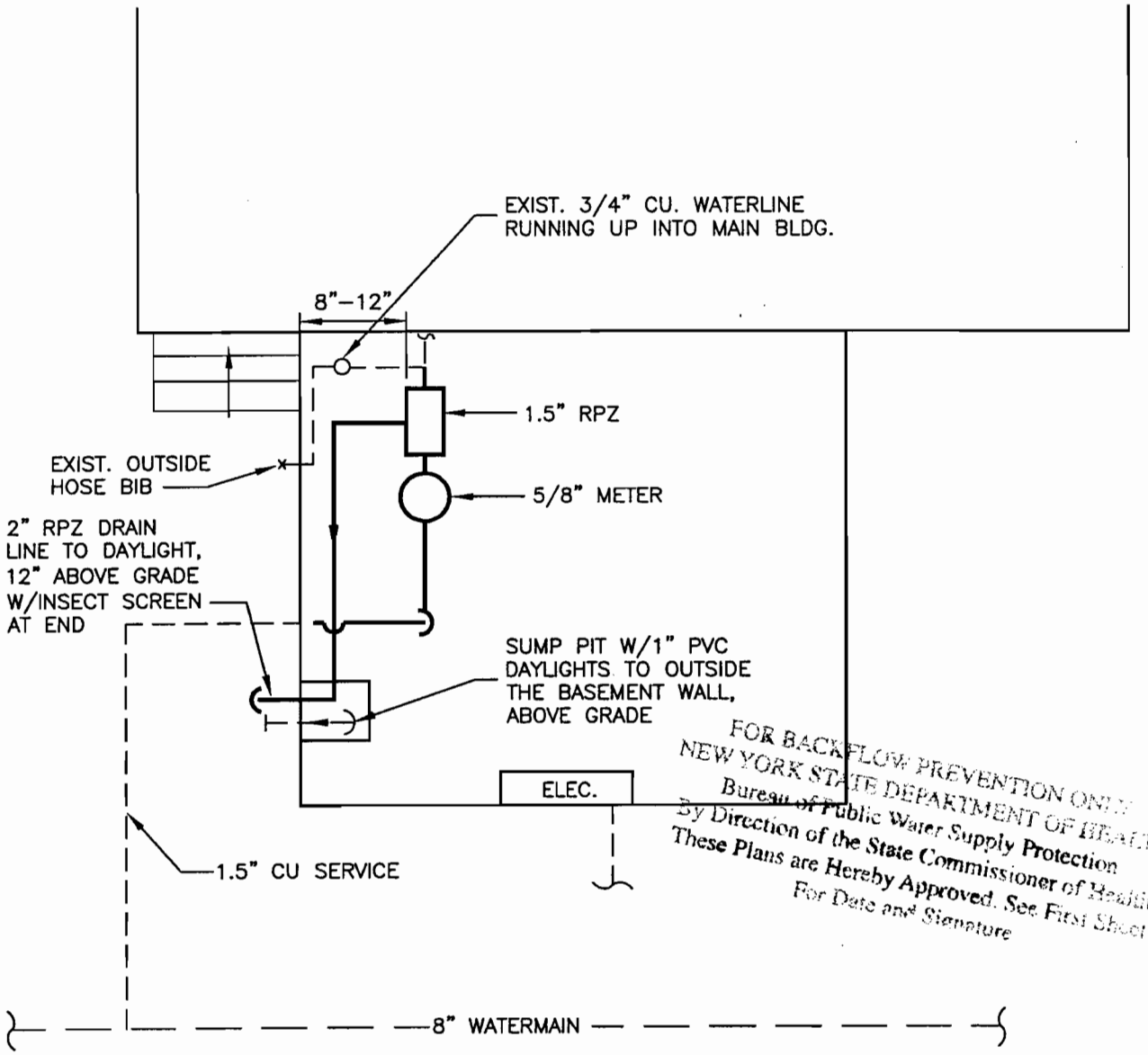

FOR BACKFLOW PREVENTION ONLY
NEW YORK STATE DEPARTMENT OF HEALTH
Bureau of Public Water Supply Protection
By Direction of the State Commissioner of Health
These Plans are Hereby Approved. See First Sheet
For Date and Signature

University of the State of New York
C. MICHAEL ELLIOTT
No. C55513
Professional Engineer

PLAN VIEW

NOT TO SCALE

-N-

Stearns & Wheler, LLC Environmental Engineers and Scientists CAZENOVIA, NEW YORK DATE:11/02 JOB No.:10209.50	BACKFLOW PREVENTER INSTALLATION LEHIGH VALLEY RR DERAILMENT SITE MONROE COUNTY WATER AUTHORITY NORTHWOODS SPORTSMAN CLUB PLAN VIEW

02/11 CAZ RC
M:\10209\FIGURE\10209F04.DWG

11/02 CAZ RC
M:\10209\FIGURE\10209F07.DWG

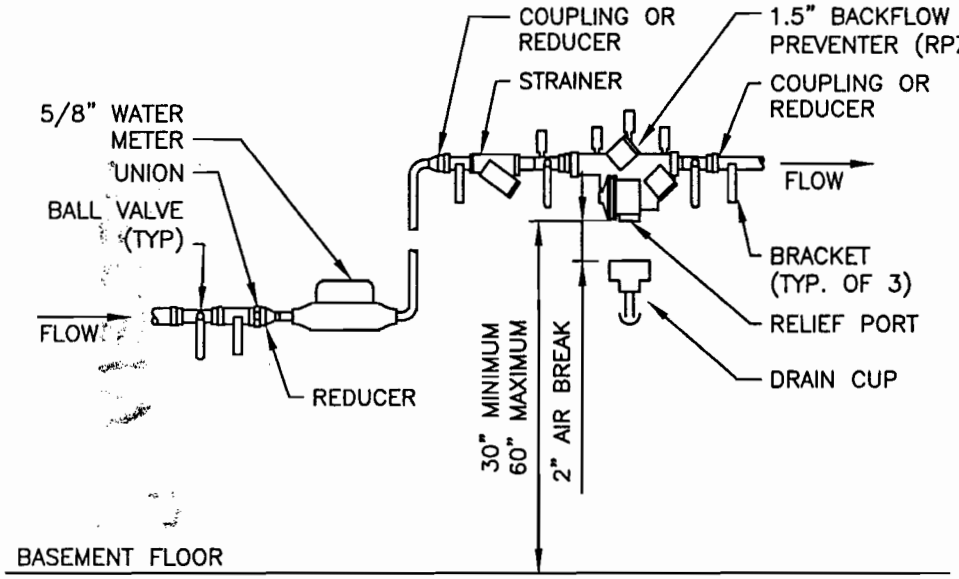

NOTE: SEE SIDE ELEVATION VIEW FOR VERTICAL/HORIZONTAL CLEARANCES.

RPZ = REDUCED PRESSURE ZONE

FRONT ELEVATION VIEW

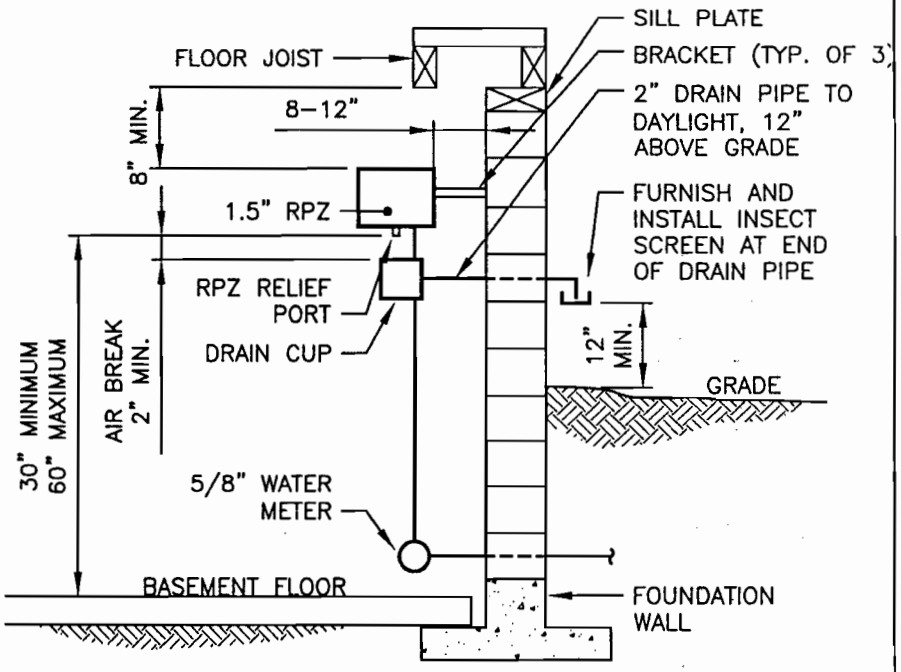

SIDE ELEVATION VIEW

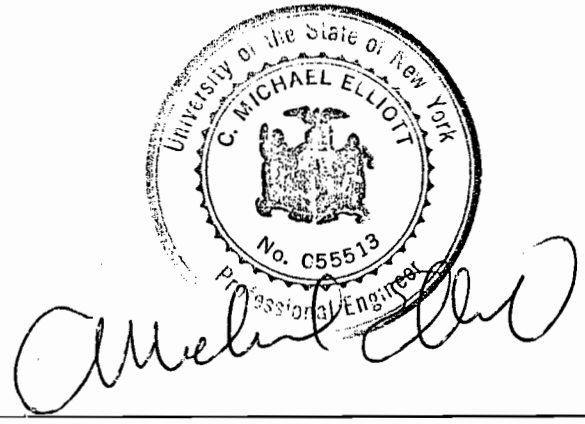

WATER METER AND BACKFLOW PREVENTER

NOT TO SCALE

1. ANGLE BRACKETS SHALL BE MOUNTED TO WALL AND PIPE SECURED WITH U-BOLTS.
2. BACKFLOW PREVENTER SHALL BE 8" TO 12" OFF FACE OF WALL.

Stearns & Wheler, LLC
Environmental Engineers and Scientists
CAZENOVIA, NEW YORK

DATE: 11/02 JOB No.:10290.50

BACKFLOW PREVENTER INSTALLATION
LEHIGH VALLEY RR DERAILMENT SITE
MCWA / LCWSA

NORTHWOODS SPORTSMAN CLUB
WATER METER AND BACKFLOW PREVENTER
ELEVATION VIEW

APPROVED

☑ FOR BACKFLOW PREVENTION ONLY

☐ AS NOTED ON PLANS

NEW YORK STATE DEPARTMENT OF HEALTH

Bureau of Public Water Supply Protection

Date 2/18/03 By _____

Chief, Design Section

Log # 16304

NEW YORK STATE DEPARTMENT OF HEALTH
Bureau of Public Water Supply Protection

Report on Test and Maintenance of Backflow Prevention Device

JUN 25 2003

☑ For the year 2003
☑ Initial test - *Complete entire form*
☐ Annual test - *Complete Part A only*

PART A Please use a separate form for each device.

Public Water Supply	Account No.	County	Block	Lot
Monroe County Wat. Auth.		Livingston		

Facility Name T.S.S. Foam Industries
Address 2770 W. Main St. Caledonia, N.Y. 14423 (street / city / zip)

Location of Device Utility Closet 1st Floor

Device Information	Manufacturer	Type	Model	Size (In inches)	Serial Number
	Febco	☑ RPZ ☐ DCV	860	1 1/2	H02338

	Check Valve No. 1	Check Valve No. 2	Differential Pressure Relief Valve	Line Pressure
Test before repair	Leaked ☐ Closed tight ☑ Pressure drop across first check valve 7.5 psid	Leaked ☐ Closed tight ☑	Opened at 3 psid	Line Pressure 62 psi; Date 06 27 03 (m d y)
Describe repair and parts used				Repaired by: Name ____ Lic # ____ Date repaired ____ (m d y)
Final test	Closed tight ☐ Pressure drop across first check valve ____ psid	Closed tight ☐	Opened at ____ psid	Date ____ (m d y)

Water Meter Number	Meter Reading	Type of Service: (check one)
77288951	0008120	☑ Domestic ☐ Fire ☐ Other ____

Remarks (Describe deficiencies: bypasses, outlets before the device, connections between the device and point of entry, missing or inadequate airgap, etc.)

Certification: This device ☑ meets, ☐ does NOT meet, the requirements of an acceptable containment device at the time of testing

I hereby certify the foregoing data to be correct.

Print Name	Certified Tester No.	Signature	Expiration Date
Carl Fisher	02612	Carl Fisher	10/31/03

Property owner's (or owner's agent) certification that test was performed:

Print Name	Title	Signature	Telephone
SCOTT DILIBERTO	MGR.	Scott DiLiberto	( ) 538 2321

PART B Certification that installation is in accordance with the approved plans. (To be completed by the design engineer or architect or water supplier.)

I hereby certify that this installation is in accordance with the approved plans.

Name	Title	Date	NYS DOH Log #
C. Michael Elliott	Director, waterworks	06 27 03 (m d y)	
License Number 55513	Phone (315) 655-8161		

Representing Stearns + Wheler, LLC
Address One Remington Park Drive
City Cazenovia State NY Zip 13035
Signature

Describe minor installation changes

NOTE: Send one completed copy to the designated health department representative and one copy to the water supplier within 30 days of testing the device.
-1013 (9/91) Notify owner and water supplier immediately if device fails test and repairs cannot immediately be

File 70318.5

Application for Approval of Backflow Prevention Device for Livingston County Water and Sewer Authority

TSS Foam Industries

Water Distribution System
Lehigh Valley Railroad Derailment Site
New York State
Department of Environmental Conservation

Stearns & Wheler, LLC
File No.70318KD
October-99

Table of Contents

Engineering Report
Site and Building Plan
Backflow Preventer Installation

LIVINGSTON COUNTY DEPARTMENT OF HEALTH
Mount Morris, NY

Date November 1, 1999

These plans for 1½-inch RPZ installation, TSS Foam Industries, Caledonia, NYS

Are hereby approved pursuant to Sanitary Code, Part 5, subject to the provisions of the Approval of Plans issued this day.

For the Public Health Director

Thomas J. Clark PE
Sanitary Engineer

Stearns & Wheler, LLC
ENVIRONMENTAL ENGINEERS & SCIENTISTS

ENGINEERING REPORT

APPLICATION FOR APPROVAL OF A BACKFLOW PREVENTION DEVICE
LIVINGSTON COUNTY WATER AND SEWER AUTHORITY
WATER DISTRIBUTION SYSTEM
LEHIGH VALLEY RAILROAD DERAILMENT SITE
NYSDEC

June 15, 1999
S&W No. 70318.0

---

1. **Facility**

TSS Foam Industries
2770 West Main Street
Caledonia, NY 14423
Attn: Sam Diliberto
(716) 538-2321

Facility is a foam-cutting warehouse. Foam is cut into specified sizes, painted or glued, and sent out to be used as packaging. There are no manufacturing processes. Size of the one-story facility is shown on the site plan. No other buildings are on site.

2. **Water Uses**

Water uses within the facility include lavatories and sinks.

3. **Domestic Fire Service**

There is no domestic fire service within the facility.

4. **Fire Fighting System**

There is no fire fighting system within the facility.

5. **Heating and Cooling**

The facility is heated with natural gas (forced air) and they have electric, window-mounted air conditioners.

6. **Sewage Disposal**

Sewage is disposed via a septic leach field.

7. **Maximum Flow Demand**

The maximum flow demand for this facility is 28,800 gpd (20 gpm).

8. **Underground Irrigation**

No underground irrigation system exists or is proposed.

9. **Pressure**

Pressure prior to installation of the backflow preventer is 62 psi and 52 psi after installation.

10. **Booster Pumping Station**

No booster pumping station is proposed for this facility.

11. **Description of Backflow and Preventer Installation**

The backflow preventer will be installed in the utility room located on the northeast side of the facility (see attached drawings). The room is well lighted, heated, and has access for maintenance and testing. The RPZ drain port will daylight through the west wall and discharge onto the ground outside.

12. **Dual Backflow Preventers**

The facility does not need a continuous water supply and, therefore, does not need dual backflow preventers.

13. **Floodplain**

The facility is located well above the 100-year old flood plain.

14. **Degree of Hazard**

The water system to this facility is considered hazardous based on the NYSDOH backflow prevention manual. The on-site well will be abandoned and disconnected from the water system in accordance with NYSDEC regulations. However, since this is a commercial facility and is considered hazardous, this facility should be equipped with a reduced pressure zone device (see attached drawings).

The reduced pressure zone device shall be a 1½" Watts model #909M1QT-S.

15. **Engineer's Stamp and Signature**

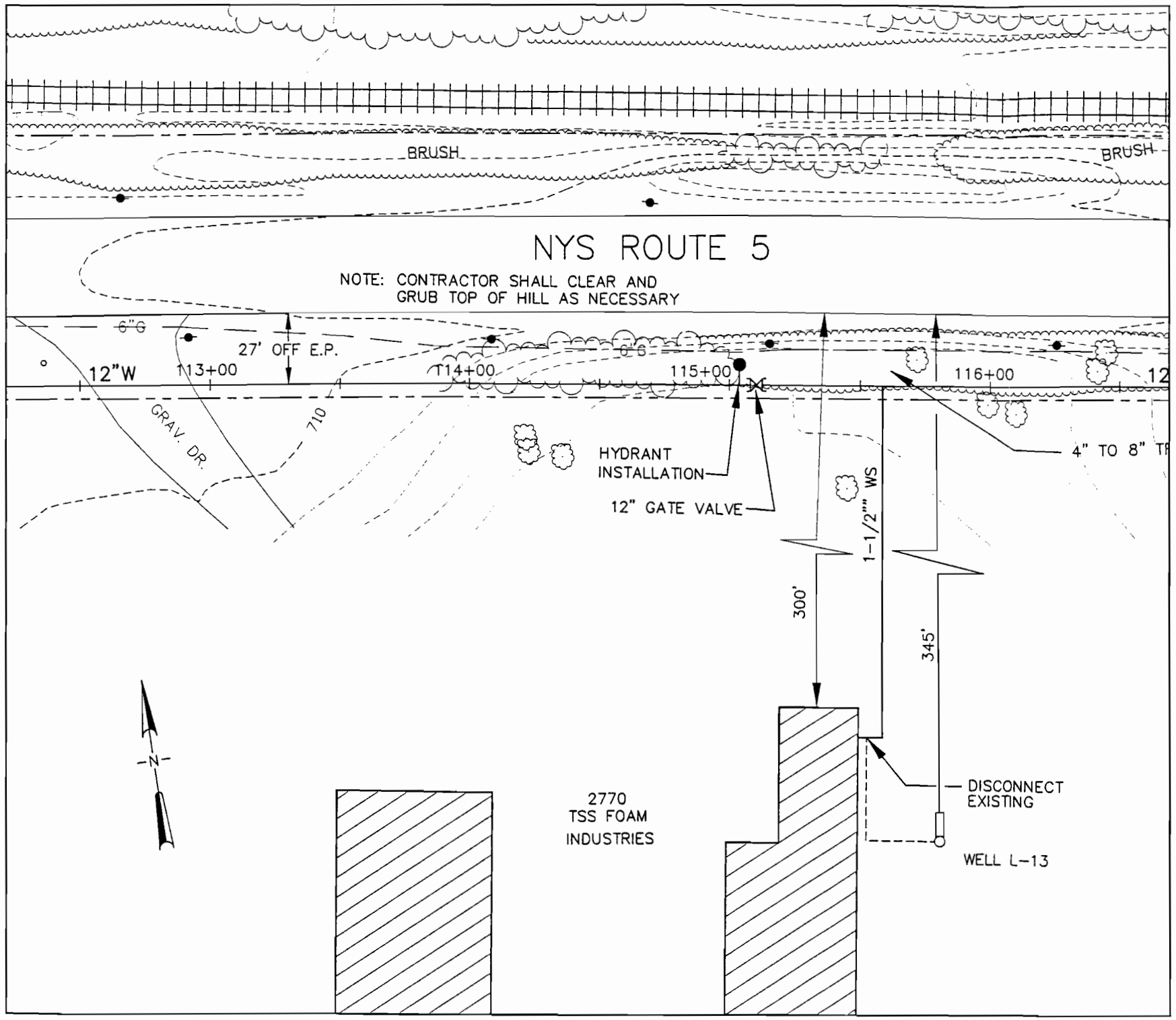

SITE PLAN

SCALE: 1"=50'

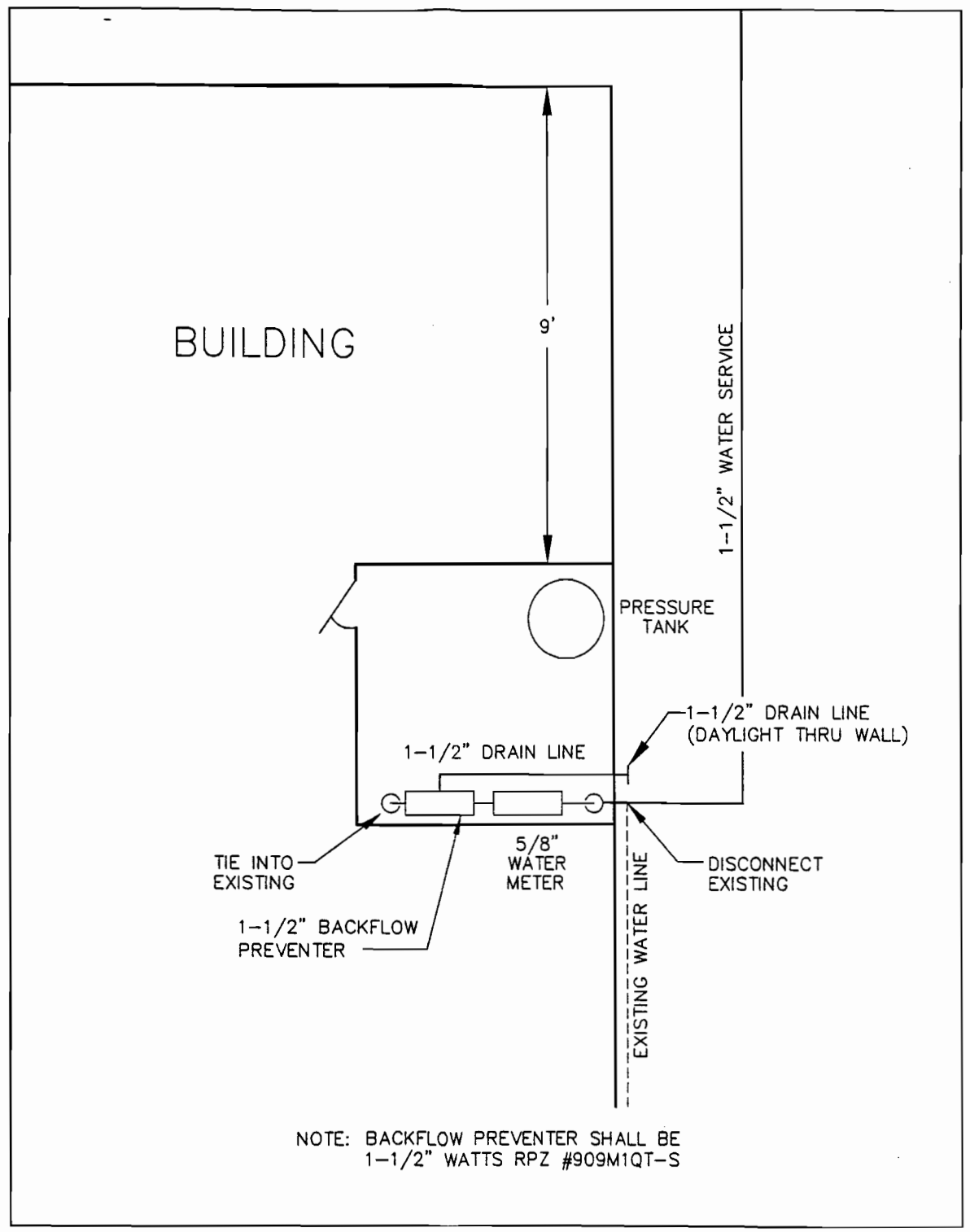

UTILITY ROOM PLAN

N.T.S.

APPROVED
LIVINGSTON COUNTY HEALTH DEPT
DATE November 1, 1999

Stearns & Wheler, LLC
ENVIRONMENTAL ENGINEERS & SCIENTISTS
CAZENOVIA, NEW YORK

DATE:5/99 JOB No.:70318KD

BACKFLOW PREVENTER INSTALLATION
LEHIGH VALLEY RR DERAILMENT SITE
LIVINGSTON COUNTY WATER & SEWER AUTHORITY

TSS FOAM INDUSTRIES SITE PLAN
SITE/UTILITY ROOM PLAN

70318KD1
99/5 CAZ FSE
\\FS2\DATA\CAD\...\70318KD\FIGURES\70318F15.DWG

99/5 CAZ CMS
\\FS2\DATA\CADUSE\70318KD\FIGURE\70318F08.DWG

RPZ = REDUCED PRESSURE ZONE
DCV = DOUBLE CHECK VALVE

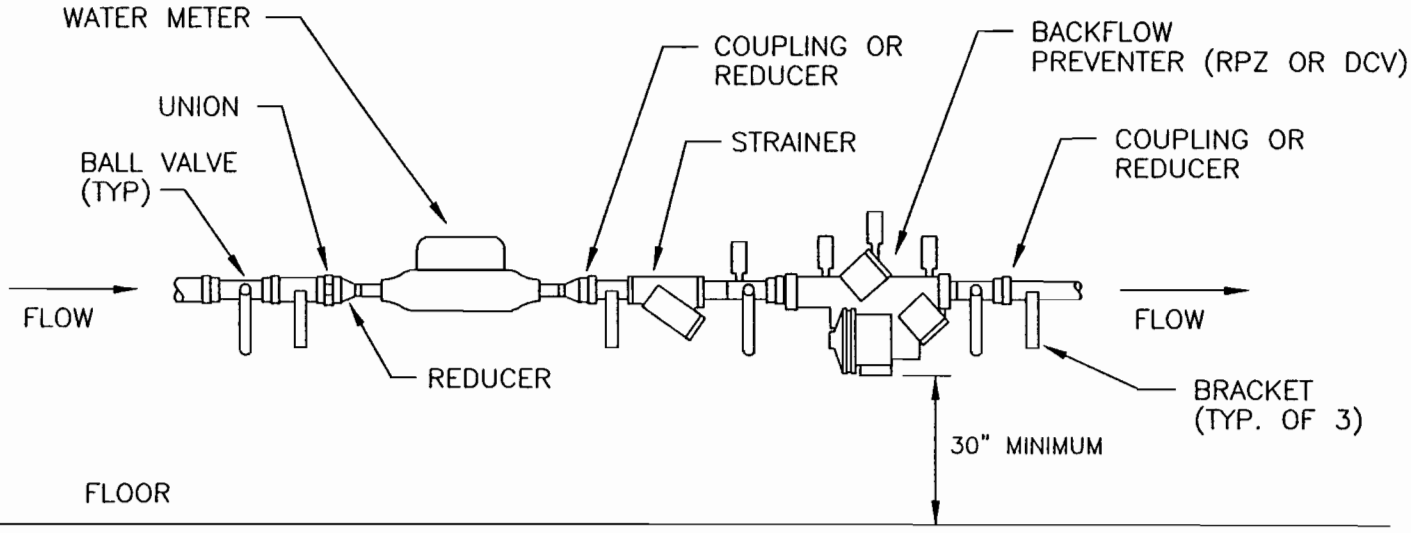

APPROVED
LIVINGSTON COUNTY HEALTH DEPT
DATE December 1, 1999

WATER METER AND BACKFLOW PREVENTER

N.T.S.

1. ANGLE BRACKETS SHALL BE MOUNTED TO WALL AND PIPE SECURED WITH U-BOLTS.
2. RPZ'S SHALL HAVE DRAIN LINE INSTALLED (SEE PLAN VIEW) WITH AIR GAP DRAIN CUP BELOW VENT PORT.
3. CONTRACTOR MAY PUT BACKFLOW PREVENTER ABOVE METER IF THERE IS INSUFFICIENT ROOM TO INSTALL HORIZONTALLY.
4. BACKFLOW PREVENTER SHALL BE 3" TO 6" OFF FACE OF WALL.

Stearns & Wheler, LLC
ENVIRONMENTAL ENGINEERS & SCIENTISTS
CAZENOVIA, NEW YORK

DATE: 5/99 JOB No.:70318KD

BACKFLOW PREVENTER INSTALLATION
LEHIGH VALLEY RR DERAILMENT SITE
MCWA / LCWSA

WATER METER AND BACKFLOW PREVENTER
STANDARD INSTALLATION DETAIL

NEW YORK STATE DEPARTMENT OF HEALTH
Bureau of Public Water Supply Protection

Application For Approval of Backflow Prevention Devices

PRINT OR TYPE ALL ENTRIES EXCEPT SIGNATURES
Please complete items 1 through 12a + Block and Lot Numbers

Block # 1 | Lot # 14.1 | FOR DEPARTMENT USE ONLY Log No.

1. Name of Facility: TSS Foam Industries
2. City, Village, Town: Town
3. County: Livingston
4. Location of Facility — street: 2770 West Main Street | city: Caledonia | state: NY | zip: 14423
4a. Phone Numbers: (716) 538-2321
Contact Person: Sam DiLiberto
5. Approx. Location of Device(s): Utility Room
6. Mfg. Model #: Watts #909 AMG-S
Size of Device(s): 1½"

# of Fire Services	# of Domestic Services	# of Combined Services	Total # of Services	Total # of Buildings
0	1	0	1	1

7. Name of Owner: Samuel DiLiberto, JR | Title: President | Phone Number: 716 538-2321
Full Mailing Address — street: 2770 W. Main Rd. PO Box 119 | city: Caledonia | state: NY | zip: 14423
Owner's Signature: Samuel DiLiberto | Date: 10/16/99

8. Nature of works
- ☒ Initial Device Installation
- ☐ Replace Existing Device
- 8a. ☐ New Service ☒ Existing Service
- 8b. ☐ New Building ☒ Existing Building ☐ Major Renovation

9. Name of Design Engineer or Architect: Stearns + Wheler, LLC
Address — street: One Remington Park Drive | city: Cazenovia | state: NY | zip: 13035
University of the State of New York — C. MICHAEL ELLIOTT — No. 055513 — Professional Engineer
Original ink signature and seal required on all copies.
signature

10. NYS License #: 55513
☒ PE ☐ RA ☐ Other
10a. Telephone Number(s): (315) 655-8161
Date: 10/12/99 (m d y)

11. Water System Pressure (psi) at Point of Connection: Max 65 Avg 62 Min 50
12. Estimate Installation Cost: $2500
12a. Estimate Design Cost: $1500

13. Degree of Hazard
- ☐ Hazardous
- ☐ Aesthetically Objectionable

List of processes or reasons that lead to degree of hazard checked:

14. Public water supply name: LCWSA
Name of supplier's designated representative:
Mailing address — street: PO Box 396 | city: Lakeville | state: NY | zip: 14480
Title: CHAIRMAN
Telephone No.: (716) 346 3523
Signature* Frank T Riedman | Date: 10/19/99
* Your signature endorses proposal

Note: All applications must be accompanied by plans, specifications and an engineer's report describing the project in detail. The project must first be submitted to the water supplier, who will forward it to the local public health engineer. This form must be prepa in quadruplicate with four copies of all plans, specifications and descriptive literature.

DOH-347 (5/91)

NEW YORK STATE DEPARTMENT OF HEALTH
Bureau of Public Water Supply Protection

Report on Test and Maintenance of Backflow Prevention Device

For the year 2003
☑ Initial test - *Complete entire form*
☐ Annual test - *Complete Part A only*

PART A Please use a separate form for each device.

Water Supply	Account No.	County	Block	Lot
Monroe County Water Auth		Livingston		

Facility Name: Lima rock Speed Way
Address: Lima Rock Rd, Lima, NY 14485 (street / city / zip)
Location of Device: Snack Shack - East Wall

Device Information	Manufacturer	Type	Model	Size (in inches)	Serial Number
	Febco	☑ RPZ ☐ DCV	860	2	H04493

	Check Valve No. 1	Check Valve No. 2	Differential Pressure Relief Valve	Line Pressure 71 psi
First test before repair	Leaked ☐ Closed tight ☑ Pressure drop across first check valve 8 psid	Leaked ☐ Closed tight ☑	Opened at 3.5 psid	Date 05 19 03 (m d y)
Describe repairs and parts used				Repaired by Name ____ Lic # ____ Date repaired ____ (m d y)
Final test after repair	Closed tight ☐ Pressure drop across first check valve ____ psid	Closed tight ☐	Opened at ____ psid	Date ____ (m d y)

Water Meter Number: | Meter Reading: | Type of Service: (check one) ☑ Domestic ☐ Fire ☐ Other ____

Remarks (Describe deficiencies: bypasses, outlets before the device, connections between the device and point of entry, missing or inadequate airgap, etc.)

Certification: This device ☑ meets, ☐ does NOT meet, the requirements of an acceptable containment device at the time of testing
I hereby certify the foregoing data to be correct.

Print Name	Certified Tester No.	Signature	Expiration Date
Carl Fisher	02612	[signature]	10/31/03

Property owner's (or owner's agent) certification that test was performed:

Print Name	Title	Signature	Telephone
FRANK JARKIEWICZ	president	[signature]	(585) 548-7786

PART B Certification that installation is in accordance with the approved plans. (To be completed by the design engineer or architect or water supplier.)

I hereby certify that this installation is in accordance with the approved plans.

Name	Title	Date	NYS DOH Log #
C. Michael Elliott	Director, Waterworks	06 27 03 (m d y)	
License Number 55513	Phone (315) 655-8161		

Representing: Stearns + Wheler, LLC
Address: One Remington Park Drive
City: Cazenovia State: NY Zip: 13035
Signature: [signature]

Describe minor installation changes

NOTE: Send one completed copy to the designated health department representative and one copy to the water supplier within 30 days of testing the device.
DOH-1013 (9/91) **Notify owner and water supplier immediately if device fails test and repairs cannot immediately be made.**

File 70318.5

Application for Approval of Backflow Prevention Device for Livingston County Water and Sewer Authority

Lime Rock Speedway

Water Distribution System
Lehigh Valley Railroad Derailment Site
New York State
Department of Environmental Conservation

Stearns & Wheler, LLC
File No.70318KD
October-99

Table of Contents

Engineering Report
Site and Building Plan
Backflow Preventer Installation

LIVINGSTON COUNTY DEPARTMENT OF HEALTH
Mount Morris, NY
These plans for 2-inch RPZ installation, Lime Rock Speedway, Caledonia Parts, NYS
Are hereby approved pursuant to Sanitary Code Approval of Plans, subject to the provisions of the Sanitary Code issued this day.
Date November 1, 1999
For the Public Health Director
Thomas H Clark PE
Sanitary Engineer

Stearns & Wheler, LLC
ENVIRONMENTAL ENGINEERS & SCIENTISTS

ENGINEERING REPORT

APPLICATION FOR APPROVAL OF A BACKFLOW PREVENTION DEVICE
LIVINGSTON COUNTY WATER AND SEWER AUTHORITY
WATER DISTRIBUTION SYSTEM
LEHIGH VALLEY RAILROAD DERAILMENT SITE
NYSDEC

June 15, 1999
S&W No. 70318.0

---

1. **Facility**

Lime Rock Speedway
Lime Rock Road
Caledonia, NY 14423
Attn: Robert Kelly
(716) 226-8987

Facility is a racetrack. Two one-story buildings are located on site, both are supplied with water. The first building is a refreshment stand (28' x 18') and the second building is the restrooms (18' x 18').

2. **Water Uses**

Water uses within the facility include lavatories, sinks, an ice machine, and a 1½" fill line for their water truck.

3. **Domestic Fire Service**

There is no domestic fire service within the facility.

4. **Fire Fighting System**

There is no fire fighting system within the facility.

5. **Heating and Cooling**

The facility has no heating or cooling systems. The racetrack is shut down during the winter.

6. **Sewage Disposal**

Sewage is disposed via a septic leach field.

7. **Maximum Flow Demand**

The maximum flow demand for this facility is 36,000 gpd (25 gpm).

8. **Underground Irrigation**

No underground irrigation system exists or is proposed.

9. **Pressure**

Pressure prior to installation of the backflow preventer is 53 psi and 43 psi after installation.

10. **Booster Pumping Station**

No booster pumping station is proposed for this facility.

11. **Description of Backflow and Preventer Installation**

The backflow preventer shall be installed in the utility room located on the southeast corner of the refreshment stand. The room is well lighted and has access for maintenance and testing. The RPZ drain port will daylight through the east wall and discharge onto the ground outside.

12. **Dual Backflow Preventers**

The facility does not need a continuous water supply and, therefore, does not need dual backflow preventers.

13. **Floodplain**

The facility is located well above the 100-year old flood plain.

14. **Degree of Hazard**

The owner of this facility would like to keep his well. Since his well is of unsatisfactory quality, we feel this facility should be rated hazardous and should be equipped with a reduced pressure zone device. The well will be used to fill the water truck only. The well and associated piping will be physically disconnected from the rest of the facilities water system.

The reduced pressure zone device shall be a 2" Watts model #909M1QT-S.

15. **Engineer's Stamp and Signature**

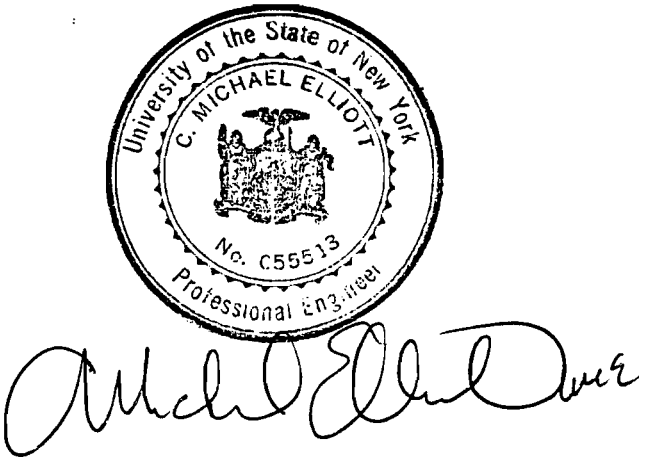

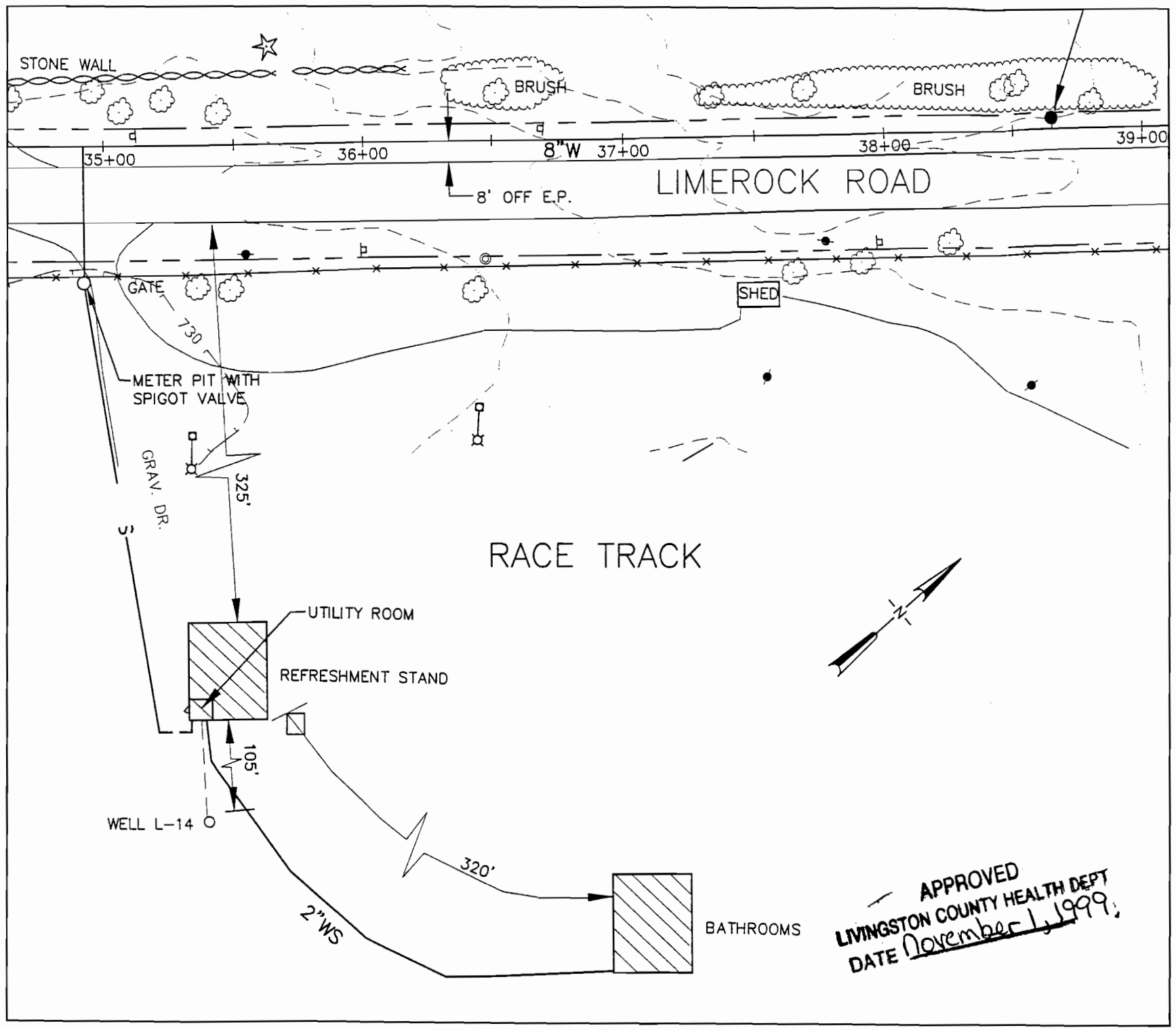

SITE PLAN

SCALE: 1"=50'

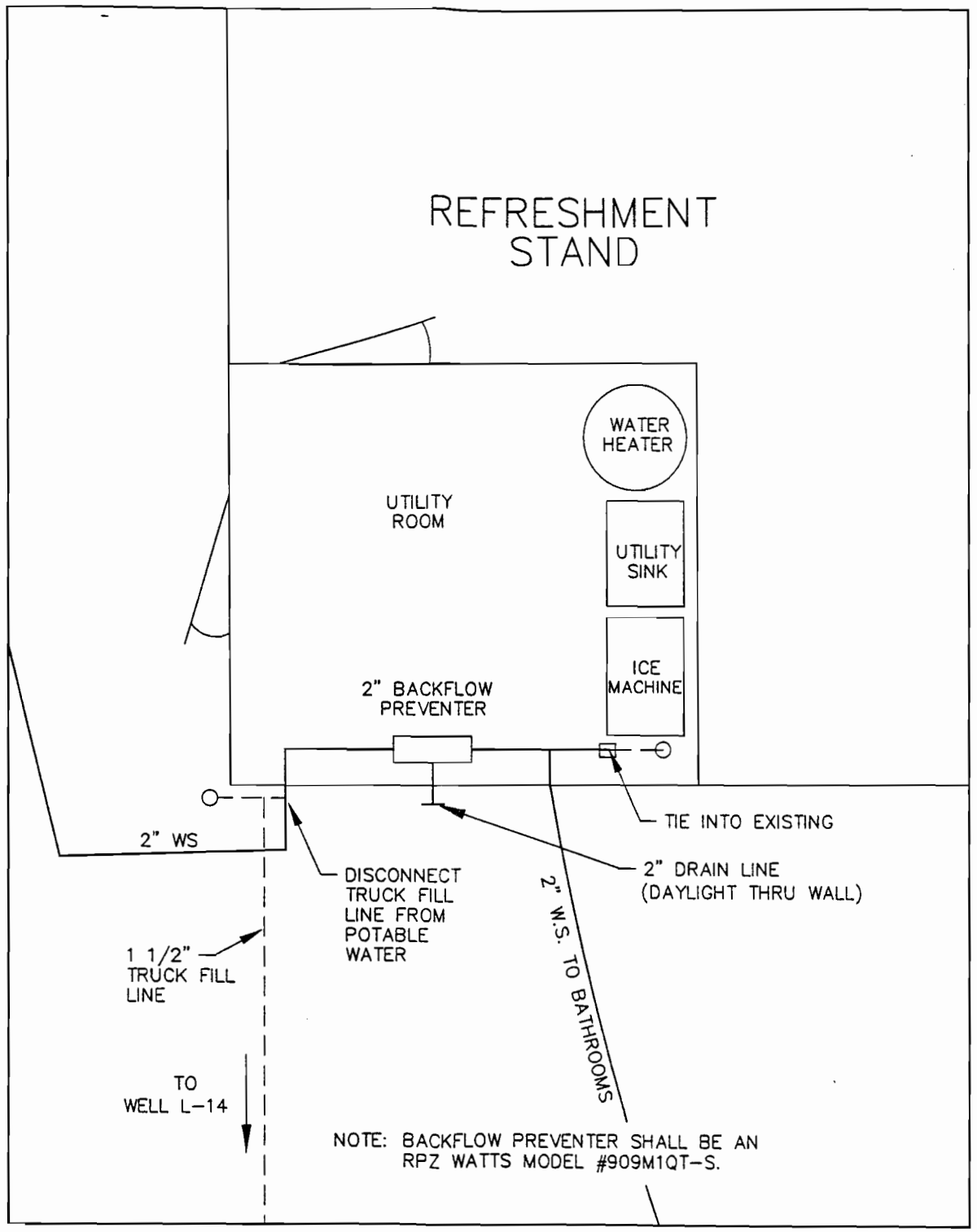

UTILITY ROOM PLAN

N.T.S.

Stearns & Wheler, LLC
ENVIRONMENTAL ENGINEERS & SCIENTISTS
CAZENOVIA, NEW YORK

DATE:5/99 JOB No.:70318KD

BACKFLOW PREVENTER INSTALLATION
LEHIGH VALLEY RR DERAILMENT SITE
LIVINGSTON COUNTY WATER & SEWER AUTHORITY

LIMEROCK SPEEDWAY
SITE/UTILITY ROOM PLAN

70318X01
99/5 CAZ CMS
\\FS2\DATA\CADUSE\70318KD\FIGURES\70318F11.DWG

99/5 CAZ CMS
\\FS2\DATA\CADUSE\70318KD\FIGURE\70318F23.DWG

RPZ = REDUCED PRESSURE ZONE
DCV = DOUBLE CHECK VALVE

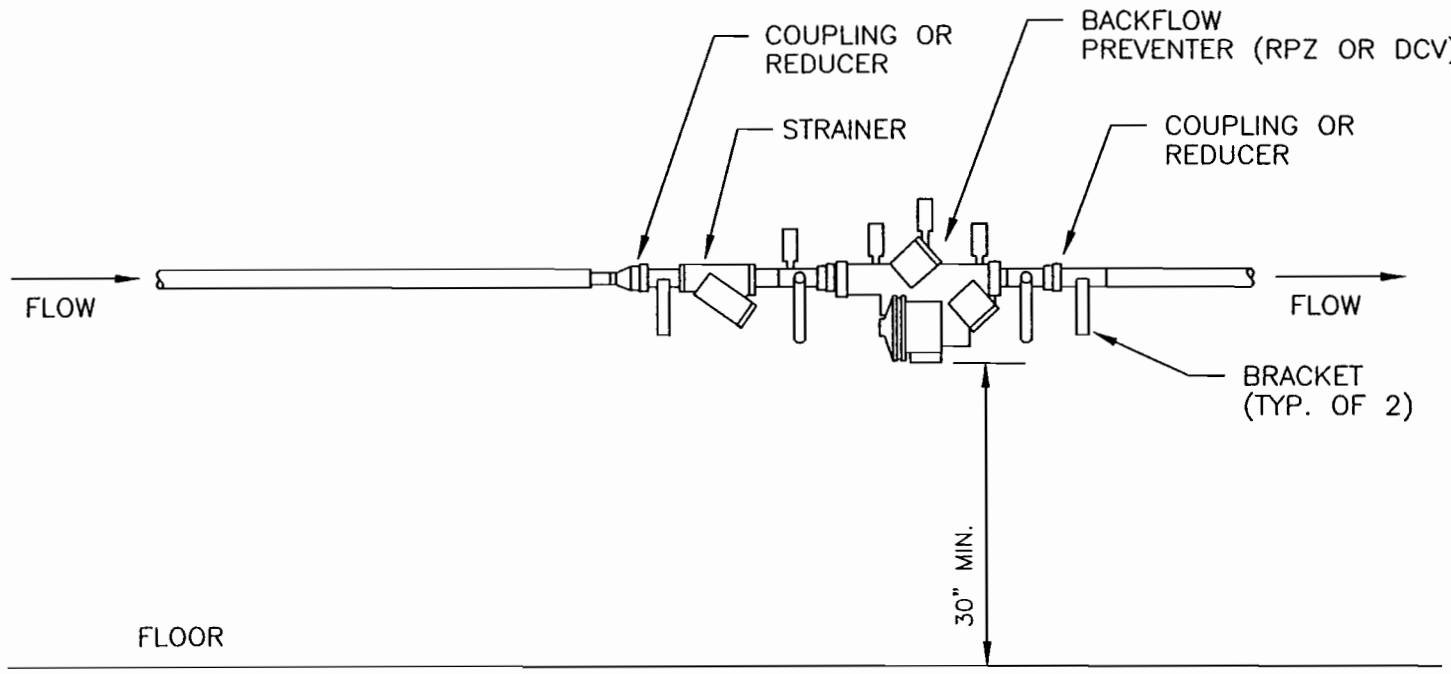

APPROVED
LIVINGSTON COUNTY HEALTH DEPT
DATE December 1 1999

BACKFLOW PREVENTER

N.T.S.

1. ANGLE BRACKETS SHALL BE MOUNTED TO WALL AND PIPE SECURED WITH U-BOLTS.
2. RPZ'S SHALL HAVE DRAIN LINE INSTALLED (SEE PLAN VIEW) WITH AIR GAP DRAIN CUP BELOW VENT PORT.
3. BACKFLOW PREVENTER SHALL BE 3" TO 6" OFF FACE OF WALL.

Stearns & Wheler, LLC
ENVIRONMENTAL ENGINEERS & SCIENTISTS
CAZENOVIA, NEW YORK

DATE: 5/99 JOB No.:70318KD

BACKFLOW PREVENTER INSTALLATION
LEHIGH VALLEY RR DERAILMENT SITE
MCWA / LCWSA

BACKFLOW PREVENTER
STANDARD INSTALLATION DETAIL

NEW YORK STATE DEPARTMENT OF HEALTH
Bureau of Public Water Supply Protection

Application For Approval of Backflow Prevention Devices

PRINT OR TYPE ALL ENTRIES EXCEPT SIGNATURES
Please complete items 1 through 12a + Block and Lot Numbers

Block # 1 | Lot # 21 | FOR DEPARTMENT USE ONLY Log No.

1. Name of Facility: LIME ROCK Speedway
2. City, Village, Town: Town
3. County: Livingston
4. Location of Facility: street Limerock Road | city Caledonia | state NY | zip 14423
4a. Phone Numbers: (716) 226-8987
Contact Person: Robert Kelly
5. Approx. Location of Device(s): utility room
6. Mfg. Model #: watts#909M1QFS
Size of Device(s): 2"

# of Fire Services	# of Domestic Services	# of Combined Services	Total # of Services	Total # of Buildings
0	1	0	1	2

7. Name of Owner: TRI COUNTY RACING CLUB INC
Title: FACULTY DIR.
Phone Number: 716 226 8987
Full Mailing Address: street P.O. BOX 42
city CALEDONIA | state N.Y. | zip 14423
Owner's Signature: Robert W. Kelly
Date: m 7 d 17 y 99

8. Nature of works
- [x] Initial Device Installation
- [ ] Replace Existing Device

8a.
- [ ] New Service
- [x] Existing Service

8b.
- [ ] New Building
- [x] Existing Building
- [ ] Major Renovation

9. Name of Design Engineer or Architect: Stearns & Wheler, LLC
Address: street 1 Remington Park Dr.
city Cazenovia
state NY | zip 13035
University of the State of New York — C. MICHAEL ELLIOTT — No. 055513 — Professional Engineer
signature
Original ink signature and seal required on all copies.

10. NYS License #: 55513
[x] PE [ ] RA [ ] Other
10a. Telephone Number(s): (315) 655-8161
Date: m 10 d 12 y 99

11. Water System Pressure (psi) at Point of Connection: Max 60 Avg 53 Min 45
12. Estimate Installation Cost: $3000
12a. Estimate Design Cost: $2000

13. Degree of Hazard
- [ ] Hazardous
- [ ] Aesthetically Objectionable

List of processes or reasons that lead to degree of hazard checked:

14. Public water supply name: LCWSA
Name of supplier's designated representative:
Mailing address: street PO Box 396
city Lakeville | state NY | zip 14480
Title: CHAIRMAN
Telephone No. (716) 346-3523
Signature*: Frank J. Breelman
Date: m 10 d 19 y 99
* Your signature endorses proposal

Note: All applications must be accompanied by plans, specifications and an engineer's report describing the project in detail. The project must first be submitted to the water supplier, who will forward it to the local public health engineer. This form must be prepa in quadruplicate with four copies of all plans, specifications and descriptive literature.

DOH-347 (5/91)

Bureau of Public Water Supply Protection

Report on Test and Maintenance of Backflow Prevention Device

☑ For the year 2003
☑ Initial test - *Complete entire form*
☐ Annual test - *Complete Part A only*

PART A Please use a separate form for each device.

Pic Water Supply	Account No.	County	Block	Lot
Monroe County Wat. Auth		Livingston		

Facility Name P.J. Auto Parts
Address 2705 W Main St Caledonia, NY 14423 (street / city / zip)
Location of Device Hot Box in front of office

Device Information	Manufacturer	Type	Model	Size (in inches)	Serial Number
	Febco	☑ RPZ ☐ DCV	860	1	H07328

	Check Valve No. 1	Check Valve No. 2	Differential Pressure Relief Valve	Line Pressure 64 psi
Test before repair	Leaked ☐ Closed tight ☑	Leaked ☐ Closed tight ☑	Opened at 3.5 psid	Date 12 / 28 / 03 (m d y)
	Pressure drop across first check valve 7.5 psid			
Describe repairs and materials used				Repaired by: Name ____ Lic # ____ Date repaired ____ (m d y)
Final test	Closed tight ☐	Closed tight ☐	Opened at ____ psid	Date ____ (m d y)
	Pressure drop across first check valve ____ psid			

Water Meter Number	Meter Reading	Type of Service: (check one)
		☑ Domestic ☐ Fire ☐ Other ____

Remarks (Describe deficiencies: bypasses, outlets before the device, connections between the device and point of entry, missing or inadequate airgap, etc.)

Hot Box may not keep device from freezing!!

Certification: This device ☑ meets, ☐ does NOT meet, the requirements of an acceptable containment device at the time of testing

I hereby certify the foregoing data to be correct.

Print Name	Certified Tester No.	Signature	Expiration Date
Carl Fisher	02612	[signature]	10/31/03

Property owner's (or owner's agent) certification that test was performed:

Print Name	Title	Signature	Telephone
William Pyrus			( )

PART B Certification that installation is in accordance with the approved plans. (To be completed by the design engineer or architect or water supplier.)

I hereby certify that this installation is in accordance with the approved plans.

NYS DOH Log # ____

Name	Title	Date
Michael Elliott	Director, Waterworks	04 / 21 / 03 (m d y)
License Number 55513	Phone (315) 655-8161	
Representing Stearns & Wheler, LLC		
Address One Remington Park Drive		
City Cazenovia	State NY	Zip 13035
Signature [signature]		

Describe minor installation changes

NOTE: Send one completed copy to the designated health department representative and one copy to the water supplier within 30 days of testing the device.

DOH-1013 (9/91) **Notify owner and water supplier immediately if device fails test and repairs cannot immediately be made.**

File 70318.5

Application for Approval of Backflow Prevention Device for Livingston County Water and Sewer Authority

P.J.'s Auto Parts

Water Distribution System
Lehigh Valley Railroad Derailment Site
New York State
Department of Environmental Conservation

Stearns & Wheler, LLC
File No.70318KD
October-99

Table of Contents

Engineering Report
Site and Building Plan
Backflow Preventer Installation

LIVINGSTON COUNTY DEPARTMENT OF HEALTH
Mount Morris, NY

Date November 1, 1999

These plans for 1-inch RPZ installation, PI's Auto Parts, Caledonia Part 5, NYS

Are hereby approved pursuant to Sanitary Code, subject to the provisions of the Approval of Plans issued this day.

For the Public Health Director

Thomas [illegible]

Sanitary Engineer

Stearns & Wheler, LLC
ENVIRONMENTAL ENGINEERS & SCIENTISTS

ENGINEERING REPORT

APPLICATION FOR APPROVAL OF A BACKFLOW PREVENTION DEVICE
LIVINGSTON COUNTY WATER AND SEWER AUTHORITY
WATER DISTRIBUTION SYSTEM
LEHIGH VALLEY RAILROAD DERAILMENT SITE
NYSDEC

June 15, 1999
S&W No. 70318.0

---

1. **Facility**

PJ's Auto Parts
2700 West Main Street
Caledonia, NY 14423
Owner: Bill Jones
(716) 538-2391

Facility is an auto parts store and used car parts storage and stripping lot. There are three buildings on site. The on-site well supplies the main building and then branches off to the other two.

2. **Water Uses**

Water uses within the facility include lavatories and sinks.

3. **Domestic Fire Service**

There is no domestic fire service within the facility.

4. **Fire Fighting System**

There is no fire fighting system within the facility.

5. **Heating and Cooling**

The facility is heated with natural gas (forced air) and they have electric window-mounted air conditioners.

6. **Sewage Disposal**

Sewage is disposed via a septic leach field.

15. **Engineer's Stamp and Signature**

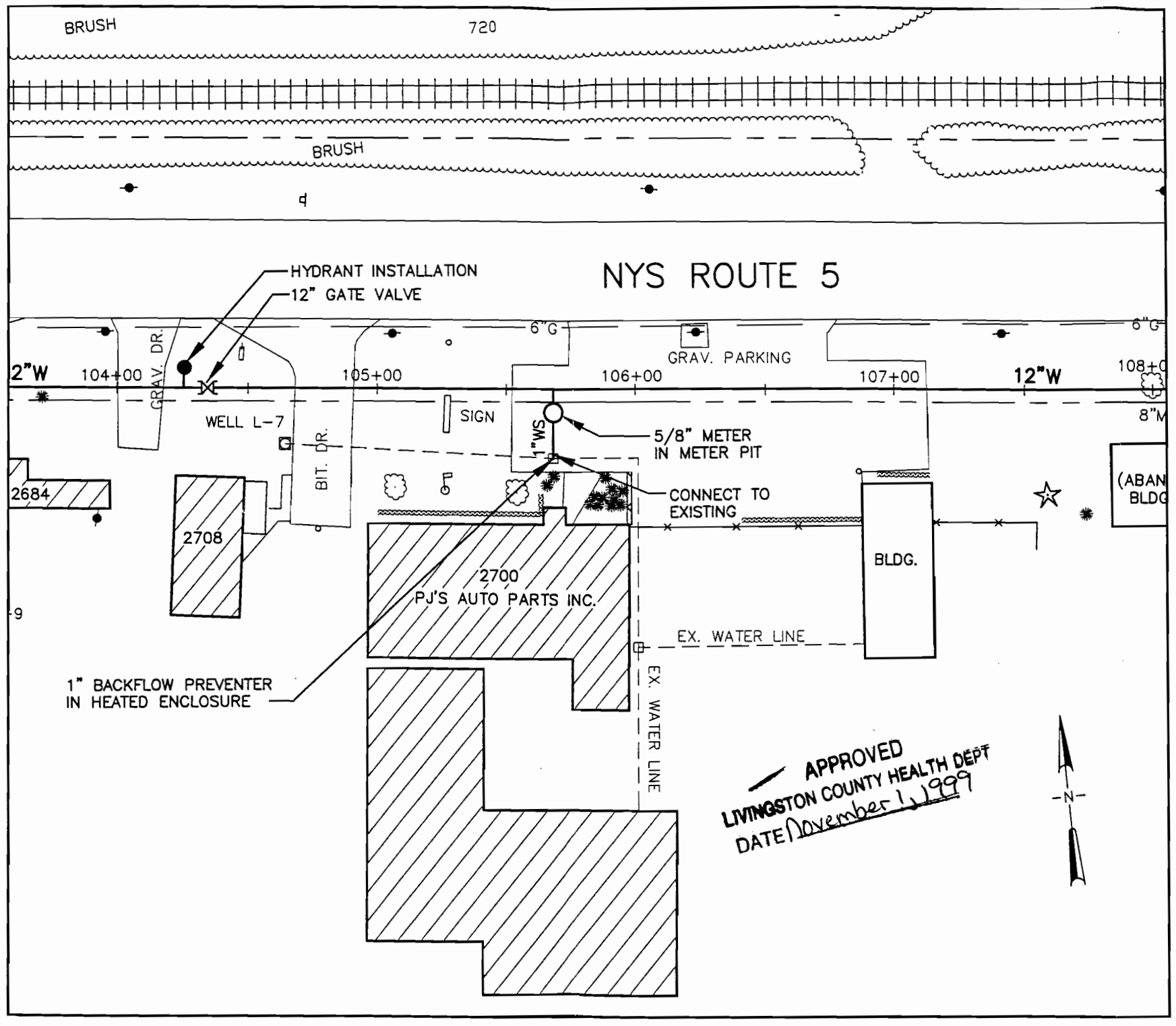

NOTE: BACKFLOW PREVENTER SHALL BE A 1" WATTS
REDUCED PRESSURE ZONE MODEL #909 MIQT-S

SITE PLAN
SCALE:1"=50'

Stearns & Wheler, LLC
ENVIRONMENTAL ENGINEERS & SCIENTISTS
CAZENOVIA, NEW YORK

DATE:5/99 JOB No.: 70318KD

BACKFLOW PREVENTER INSTALLATION
LEHIGH VALLEY RR DERAILMENT SITE
LIVINGSTON COUNTY WATER & SEWER AUTHORITY

PJ'S AUTO PARTS
SITE PLAN

70318X01
99/5 CAZ CMS
\\FS2\DATA\CADUSE\70318KD\FIGURES\70318F12.DWG

99/5 CAZ CMS KMD 7/14/99
\\FS2\DATA\CADUSE\70318KD\FIGURE\70318F27C.DWG

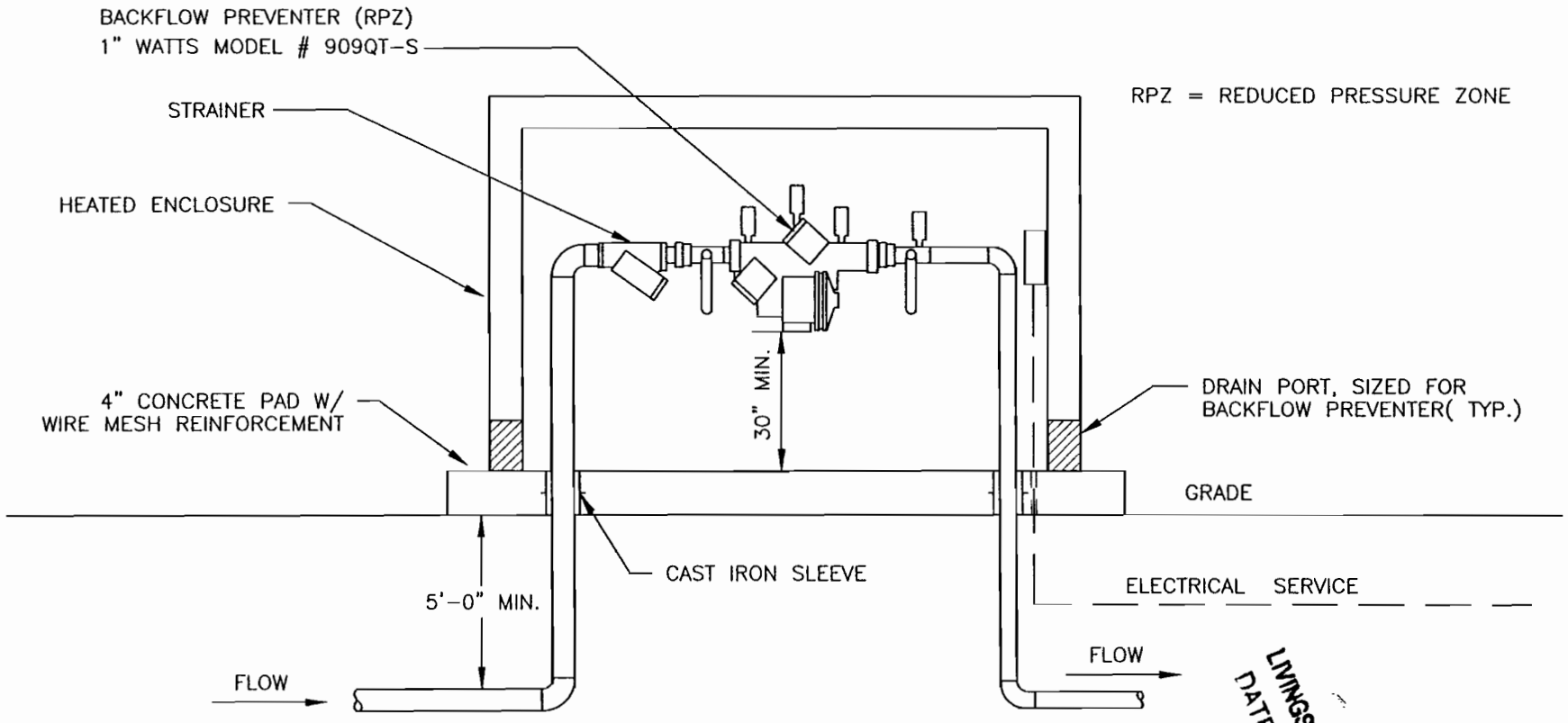

HEATED ENCLOSURE DETAIL

NOT TO SCALE.

APPROVED
LIVINGSTON COUNTY HEALTH DEPT
DATE November 1 1999

NOTES

1. HEATED ENCLOSURE SHALL BE FIBERGLASS INSULATED BOX WITH HINGED, LOCKABLE LID AND DRAIN PORTS CAPABLE OF HANDLING DISCHARGE FROM RPZ BACKFLOW PREVENTER.
2. ALL PIPING WITHIN ENCLOSURE SHALL BE ADEQUATELY HEATED TO PREVENT FREEZING.
3. ALL SUPPORTS, ANCHORS, BOLTS, ETC. TO BE STAINLESS STEEL.
4. ENCLOSURE AND CONCRETE PAD SHALL BE SIZED ACCORDING TO MANUFACTURER'S RECOMMENDATIONS. ENCLOSURE SHALL BE HOT BOX OR EQUAL.
5. SEE ATTACHED PLAN FOR RPZ SIZE AND LOCATION.

Stearns & Wheler, LLC
ENVIRONMENTAL ENGINEERS & SCIENTISTS
CAZENOVIA, NEW YORK

DATE: 7/1/99 JOB No.:70318KD

BACKFLOW PREVENTER INSTALLATION
LEHIGH VALLEY RR DERAILMENT SITE
MCWA / LCWSA

1" BACKFLOW PREVENTER
STANDARD HEATED ENCLOSURE DETAIL

NEW YORK STATE DEPARTMENT OF HEALTH
Bureau of Public Water Supply Protection

Application For Approval of Backflow Prevention Devices

PRINT OR TYPE ALL ENTRIES EXCEPT SIGNATURES
Please complete items 1 through 12a + Block and Lot Numbers

Block # 1 | Lot # 12.2 | FOR DEPARTMENT USE ONLY Log No.

1. Name of Facility: PJ's Auto Parts
2. City, Village, Town: Town
3. County: Livingston

4. Location of Facility: street 2700 West Main Street | city Caledonia | state NY | zip 14432

4a. Phone Numbers: (716) 538-2391
Contact Person: William Jones

5. Approx. Location of Device(s): Within a heated enclosure North of the main building
6. Mfg. Model #: Watts #909M1QT-S
Size of Device(s): 1"

# of Fire Services	# of Domestic Services	# of Combined Services	Total # of Services	Total # of Buildings
0	1	0	1	3

7. Name of Owner: William Jones
Title: –
Phone Number: (716) 538-2391

Full Mailing Address: street 2700 West Main Street
city Caledonia | state NY | zip 14423

Owner's Signature: William P Jones
Date: 6/16/99 (m d y)

8. Nature of works
- [x] Initial Device Installation
- [ ] Replace Existing Device

8a.
- [ ] New Service
- [x] Existing Service

8b.
- [ ] New Building
- [x] Existing Building
- [ ] Major Renovation

9. Name of Design Engineer or Architect: Stearns + Wheler, LLC

Address: street One Remington Park Drive
city Cazenovia
state NY | zip 13035

University of the State of New York
C. MICHAEL ELLIOTT
No. C55513
Professional Engineer

signature

Original ink signature and seal required on all copies.

10. NYS License #: 55513
[x] PE [ ] RA [ ] Other

10a. Telephone Number(s): (315) 655-8161

Date: 10/12/99 (m d y)

11. Water System Pressure (psi) at Point of Connection: Max 65 Avg 61 Min 50

12. Estimate Installation Cost: $4,500

12a. Estimate Design Cost: $2,000

13. Degree of Hazard
- [ ] Hazardous
- [ ] Aesthetically Objectionable

List of processes or reasons that lead to degree of hazard checked:

14. Public water supply name: LCWSA

Mailing address: street PO Box 396
city Lakeville | state NY | zip 14480

Telephone No. (716) 346 3523

Name of supplier's designated representative

Title: Chairman

Signature*: Frank J Biedma
Date: 10/19/99 (m d y)

* Your signature endorses proposal

Note: All applications must be accompanied by plans, specifications and an engineer's report describing the project in detail. The project must first be submitted to the water supplier, who will forward it to the local public health engineer. This form must be prepa in quadruplicate with four copies of all plans, specifications and descriptive literature.

DOH-347 (5/91)

Bureau of Public Water Supply Protection

# of Backflow Prevention Device

☑ For the year 2003
☑ Initial test - *Complete entire form*
☐ Annual test - *Complete Part A only*

PART A Please use a separate form for each device.

Public Water Supply	Account No.	County	Block	Lot
Monroe County W.T. Auth		Livingston		

Facility Name: Burkwell Gas Dist.
Address: 2672 Cal-Lake Rd Caledonia N.Y. 14423 (street / city / zip)
Location of Device: 1st Floor West Wall - Mens Rm

Device Information	Manufacturer	Type	Model	Size (in inches)	Serial Number
	Febco	☑ RPZ ☐ DCV	860	1½	H02317

	Check Valve No. 1	Check Valve No. 2	Differential Pressure Relief Valve	Line Pressure 62 psi
Test before repair	Leaked ☐ Closed tight ☑ Pressure drop across first check valve 7.5 psid	Leaked ☐ Closed tight ☑	Opened at 3.5 psid	Date 12 / 24 / 03 (m d y)
Describe repairs and materials used				Repaired by: Name ____ Lic # ____ Date repaired ____ (m d y)
Final test	Closed tight ☐ Pressure drop across first check valve ____ psid	Closed tight ☐	Opened at ____ psid	Date ____ (m d y)

Water Meter Number: 7732648
Meter Reading: 0002120
Type of Service: (check one) ☑ Domestic ☐ Fire ☐ Other ____

Remarks (Describe deficiencies: bypasses, outlets before the device, connections between the device and point of entry, missing or inadequate airgap, etc.)

Certification: This device ☑ meets, ☐ does NOT meet, the requirements of an acceptable containment device at the time of testing

I hereby certify the foregoing data to be correct.

Print Name	Certified Tester No.	Signature	Expiration Date
Carl Fisher	02612	[signature]	10/31/03

Property owner's (or owner's agent) certification that test was performed:

Print Name	Title	Signature	Telephone
Howard Day	Shop Foreman	[signature]	585-538-2628

PART B Certification that installation is in accordance with the approved plans. (To be completed by the design engineer or architect or water supplier.)

I hereby certify that this installation is in accordance with the approved plans.

NYS DOH Log # ____

Name	Title	Date (m d y)
C. Michael Elliot	Director, waterworks	04 / 21 / 03
License Number 55513	Phone (315) 655-8161	
Representing Stearns + Wheler, LLC		
Address One Remington Park Drive		
City Cazenovia	State NY Zip 13035	
Signature [signature]		

Describe minor installation changes

NOTE: Send one completed copy to the designated health department representative and one copy to the water supplier within 30 days of testing the device.

DOH-1013 (9/91) Notify owner and water supplier immediately if device fails test and repairs cannot immediately be made.

File 70318.5

Application for Approval of Backflow Prevention Device for Livingston County Water and Sewer Authority

Burnwell Gas Distributor

Water Distribution System
Lehigh Valley Railroad Derailment Site
New York State
Department of Environmental Conservation

Stearns & Wheler, LLC
File No.70318KD
June-99

LIVINGSTON COUNTY DEPARTMENT OF HEALTH
Mount Morris, NY

These plans for 1½-inch RPZ, Burnwell Gas Distributor, Caledonia, NYS
Are hereby approved pursuant to Part 5, Sanitary Code, subject to the provisions of the Approval of Plans issued this day.

Date September 7, 1999

For the Public Health Director
Thomas J. Clark, PE
Sanitary Engineer

Table of Contents

Engineering Report
Site and Building Plan
Backflow Preventer Installation

Stearns & Wheler, LLC
ENVIRONMENTAL ENGINEERS & SCIENTISTS

ENGINEERING REPORT

APPLICATION FOR APPROVAL OF A BACKFLOW PREVENTION DEVICE
LIVINGSTON COUNTY WATER AND SEWER AUTHORITY
WATER DISTRIBUTION SYSTEM
LEHIGH VALLEY RAILROAD DERAILMENT SITE
NYSDEC

June 15, 1999
S&W No. 70318.0

---

1. **Facility**

Burnwell Gas Distributor
C/o Seimax Gas
2672 Caledonia-LeRay Road
Caledonia, NY 14423
Attn: Brent Darch
(716) 538-2162

Facility is a office and a garage for repair of their propane gas distribution trucks. The office section is a 110' x 30' single-story building and is connected to the 120' x 40' 1½-story garage. Water service is supplied through the garage into the office. There are no other buildings on site.

2. **Water Uses**

Water uses within the facility include lavatories and a make-up line to their boiler.

3. **Domestic Fire Service**

There is no domestic fire service within the facility.

4. **Fire Fighting System**

There is no fire fighting system within the facility.

5. **Heating and Cooling**

The facility is heated with two systems. The first is propane gas (forced air) and the second is a boiler. They have a central air conditioning system, but there is no water make-up line.

6. **Sewage Disposal**

Sewage is disposed via a septic leach field.

7. **Maximum Flow Demand**

The maximum flow demand for this facility is 28,800 gpd (20 gpm).

8. **Underground Irrigation**

No underground irrigation system exists or is proposed.

9. **Pressure**

Pressure prior to installation of the backflow preventer is 67.3 psi and 57.3 psi after installation.

10. **Booster Pumping Station**

No booster pumping station is proposed for this facility.

11. **Description of Backflow and Preventer Installation**

The backflow preventer shall be installed in the lavatory located on the west side of the garage (see attached drawings). The room is well lighted, heated, and has access for maintenance and testing. The RPZ drain port will daylight through the west wall and discharge onto the ground outside.

12. **Dual Backflow Preventers**

The facility does not need a continuous water supply and, therefore, does not need dual backflow preventers.

13. **Floodplain**

The facility is located well above the 100-year old flood plain.

14. **Degree of Hazard**

The water system in this facility is connected to a boiler, which is considered a potential source of contamination. The on-site well will be abandoned and disconnected from the water system in accordance with NYSDEC regulations. However, due to the boiler, we feel that this facility should be rated hazardous and should be equipped with a reduced pressure zone device.

The reduced pressure zone device shall be a 1½" Watts model #909M1QT-S.

15. **Engineer's Stamp and Signature**

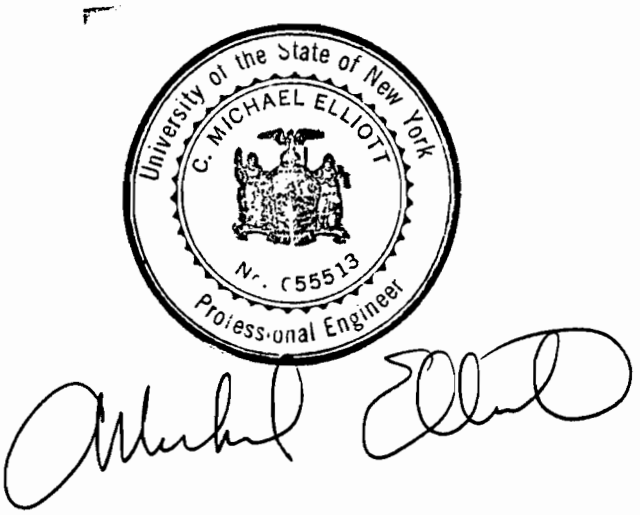

99/5 CAZ CMS
\\FS2\DATA\CADUSE\70318KD\FIGURE\70318F08.DWG

RPZ = REDUCED PRESSURE ZONE
DCV = DOUBLE CHECK VALVE

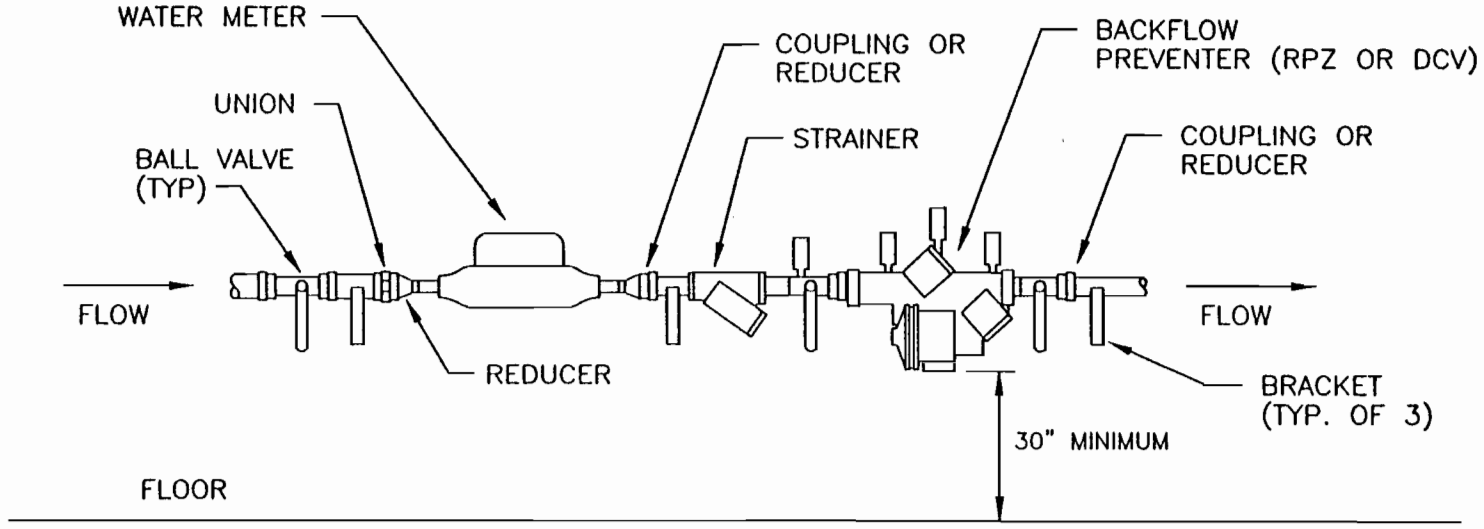

WATER METER AND BACKFLOW PREVENTER

N.T.S.

1. ANGLE BRACKETS SHALL BE MOUNTED TO WALL AND PIPE SECURED WITH U-BOLTS.
2. RPZ'S SHALL HAVE DRAIN LINE INSTALLED (SEE PLAN VIEW) WITH AIR GAP DRAIN CUP BELOW VENT PORT.
3. CONTRACTOR MAY PUT BACKFLOW PREVENTER ABOVE METER IF THERE IS INSUFFICIENT ROOM TO INSTALL HORIZONTALLY.
4. BACKFLOW PREVENTER SHALL BE 3" TO 6" OFF FACE OF WALL.

Stearns & Wheler, LLC
ENVIRONMENTAL ENGINEERS & SCIENTISTS
CAZENOVIA, NEW YORK

DATE: 5/99 JOB No.:70318KD

BACKFLOW PREVENTER INSTALLATION
LEHIGH VALLEY RR DERAILMENT SITE
MCWA / LCWSA

WATER METER AND BACKFLOW PREVENTER
STANDARD INSTALLATION DETAIL

NEW YORK STATE DEPARTMENT OF HEALTH
Bureau of Public Water Supply Protection

Application For Approval of Backflow Prevention Devices

PRINT OR TYPE ALL ENTRIES EXCEPT SIGNATURES
Please complete items 1 through 12a + Block and Lot Numbers

Block #	Lot #	FOR DEPARTMENT USE ONLY
1	60.1	Log No.

1. Name of Facility	2. City, Village, Town	3. County
Burnwell Gas Distributor	Town	Livingston

4. Location of Facility (street)	city	state	zip
2672 Caledonia-Leroy Road	Caledonia	NY	14423

4a. Phone Numbers	Contact Person
(716) 538-2162	Brent Darch

5. Approx. Location of Device(s)	6. Mfg. Model #	Size of Device(s)
lavatory	watts #909MIDT-S	1½"

# of Fire Services	# of Domestic Services	# of Combined Services	Total # of Services	Total # of Buildings
0		0	1	1

7. Name of Officer	Title	Phone Number
Brent Darch	General Manager	716-538-2162

Full Mailing Address (street): 2672 West Main Road, Caledonia
city: Brent Darch | state: NY | zip: 14423
Owner's Signature
Date: m 6 / d 16 / y 99

8. Nature of works
- ☒ Initial Device Installation
- ☐ Replace Existing Device
- 8a. ☐ New Service ☒ Existing Service
- 8b. ☐ New Building ☒ Existing Building ☐ Major Renovation

9. Name of Design Engineer or Architect: Stearns and Wheler, LLC

Address (street): 1 Remington Park Dr.
city: Cazenovia
state: NY | zip: 13035

University of the State of New York — C. MICHAEL ELLIOTT — No. 055513 — Professional Engineer

Original ink signature and seal required on all copies.

signature

10. NYS License #: 55513
☒ PE ☐ RA ☐ Other

10a. Telephone Number(s): (315) 655-8161

Date: m 7 / d 27 / y 99

11. Water System Pressure (psi) at Point of Connection	12. Estimate Installation Cost	12a. Estimate Design Cost
Max 70 Avg 67 Min 60	$3,000	$2,000

13. Degree of Hazard
- ☐ Hazardous
- ☐ Aesthetically Objectionable

List of processes or reasons that lead to degree of hazard checked:

14. Public water supply name	Name of supplier's designated representative
Livingston County Water and Sewer Authority	Frank J. Riedman

Mailing address (street): 1997 D'Angelo Drive
city: Lakeville | state: NY | zip: 14480
Telephone No. (716) 346-3523

Title: Chairman of the Board
Signature*: Frank J Riedman
Date: m 8 / d 25 / y 99
* Your signature endorses proposal

Note: All applications must be accompanied by plans, specifications and an engineer's report describing the project in detail. The project must first be submitted to the water supplier, who will forward it to the local public health engineer. This form must be prepa in quadruplicate with four copies of all plans, specifications and descriptive literature.

DOH-347 (5/91)

Bureau of Public Water Supply Protection

Report on Test and Maintenance of Backflow Prevention Device

For the year 2003

☑ Initial test - *Complete entire form*

☐ Annual test - *Complete Part A only*

PART A **Please use a separate form for each device.**

Public Water Supply	Account No.	County	Block	Lot
Monroe County Wat. Authority		Livingston		

Facility Name: Genesee Country Campground

Address: P.O. Box 100 Limerock Rd Caledonia, NY. 14423 (street / city / zip)

Location of Device: 1st Floor Utility Rm

Device Information	Manufacturer	Type	Model	Size (in inches)	Serial Number
	Febco	☑ RPZ ☐ DCV	860	2	H03137

	Check Valve No. 1	Check Valve No. 2	Differential Pressure Relief Valve	Line Pressure 66 psi
Test before repair	Leaked ☐ Closed tight ☑	Leaked ☐ Closed tight ☑	Opened at 4 psid	Date 03 26 03 (m d y)
	Pressure drop across first check valve 7.1 psid			
Describe repair and materials used				Repaired by: Name ____ Lic # ____ Date repaired ____ (m d y)
Final test	Closed tight ☐	Closed tight ☐	Opened at ____ psid	Date ____ (m d y)
	Pressure drop across first check valve ____ psid			

Water Meter Number: 48726786 | Meter Reading: 0001880 | Type of Service: (check one) ☑ Domestic ☐ Fire ☐ Other ____

Remarks (Describe deficiencies: bypasses, outlets before the device, connections between the device and point of entry, missing or inadequate airgap, etc.)

Certification: This device ☑ meets, ☐ does NOT meet, the requirements of an acceptable containment device at the time of testing

I hereby certify the foregoing data to be correct.

Print Name	Certified Tester No.	Signature	Expiration Date
Carl Fisher	02612	Carl Fisher	10/31/03

Property owner's (or owner's agent) certification that test was performed:

Print Name	Title	Signature	Telephone
Tibor Kooy	owner	Tibor Kooy	(585 538-4200

PART B Certification that installation is in accordance with the approved plans. (To be completed by the design engineer or architect or water supplier.)

I hereby certify that this installation is in accordance with the approved plans.

NYS DOH Log # ____

Name	Title	Date (m d y)
C. Michael Elliott	Director, Waterworks	04 21 03
License Number 55513	Phone (315) 655-8161	
Representing Stearns + Wheler, LLC		
Address One Remington Park Drive		
City Cazenovia	State NY	Zip 13035
Signature		

Describe minor installation changes

NOTE: Send one completed copy to the designated health department representative and one copy to the water supplier within 30 days of testing the device.

DOH-1013 (9/91) Notify owner and water supplier immediately if device fails test and repairs cannot immediately be made.

File 70318.5

Application for Approval of Backflow Prevention Device for Livingston County Water and Sewer Authority

Genesee Country Campground

Water Distribution System
Lehigh Valley Railroad Derailment Site
New York State
Department of Environmental Conservation

Stearns & Wheler, LLC
File No.70318KD
June-99

LIVINGSTON COUNTY DEPARTMENT OF HEALTH
Mount Morris, NY

These plans for 2-inch RPZ, Genesee Country Campground, Caledonia (T) are hereby approved pursuant to Part 5, NYC Sanitary Code, subject to the provisions of the Approval of Plans issued this day.

Date September 7, 1999

For the Public Health Director
Thomas C. Clark
Sanitary Engineer

Table of Contents

Engineering Report
Site and Building Plan
Backflow Preventer Installation

Stearns & Wheler, LLC
ENVIRONMENTAL ENGINEERS & SCIENTISTS

ENGINEERING REPORT

APPLICATION FOR APPROVAL OF A BACKFLOW PREVENTION DEVICE
LIVINGSTON COUNTY WATER AND SEWER AUTHORITY
WATER DISTRIBUTION SYSTEM
LEHIGH VALLEY RAILROAD DERAILMENT SITE
NYSDEC

June 15, 1999
S&W No. 70318.0

---

1. **Facility**

Genesee Country Campground
P.O. Box 100
Caledonia, NY 14423
Owner: Kathrine Sims
(716) 538-4200

Facility is campground for trailers and tents. Water service is supplied to a 125' x 50', 1-story central building. No other buildings have water supplied to them.

2. **Water Uses**

Water uses within the facility include lavatories, showers, washing machines, and outside spickets.

3. **Domestic Fire Service**

There is no domestic fire service within the facility.

4. **Fire Fighting System**

There is no fire fighting system within the facility.

5. **Heating and Cooling**

The facility is heated with propane gas (forced air) and there are no cooling systems.

6. **Sewage Disposal**

Sewage is disposed via a septic leach field.

7. **Maximum Flow Demand**

The maximum flow demand for this facility is 64,800 gpd (45 gpm).

8. **Underground Irrigation**

No underground irrigation system exists or is proposed.

9. **Pressure**

Pressure prior to installation of the backflow preventer is 55.9 psi and 45.9 psi after installation.

10. **Booster Pumping Station**

No booster pumping station is proposed for this facility.

11. **Description of Backflow and Preventer Installation**

The backflow preventer shall be installed in the utility room located on the north side of the facility (see attached drawings). The room is well lighted, heated, has access for maintenance and testing, and there is a centrally located floor drain for backflow preventer discharge.

12. **Dual Backflow Preventers**

The facility does not need a continuous water supply and, therefore, does not need dual backflow preventers.

13. **Floodplain**

The facility is located well above the 100-year old flood plain.

14. **Degree of Hazard**

The owner of this facility would like to keep his well. Since his well is of unsatisfactory quality, we feel this facility should be rated hazardous and should be equipped with a reduced pressure zone device. The well and associated piping will be physically disconnected from the rest of the facilities water system.

The reduced pressure zone device shall be a 2" Watts, model #909MIQT-S.

15. **Engineer's Stamp and Signature**

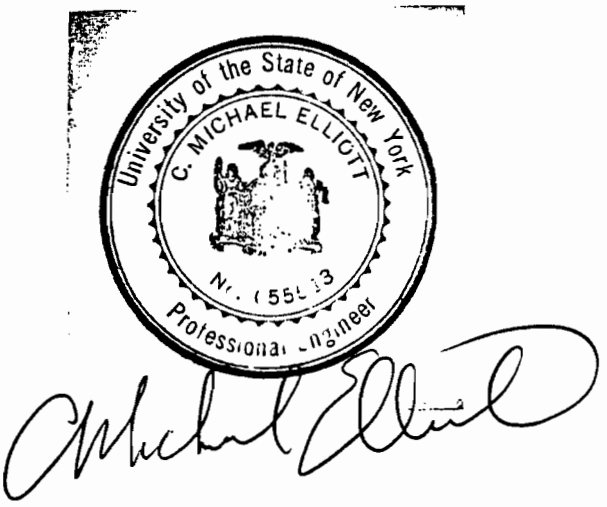

99/5 CAZ CMS
\\FS2\DATA\CADUSE\70318KD\FIGURE\70318F08.DWG

RPZ = REDUCED PRESSURE ZONE
DCV = DOUBLE CHECK VALVE

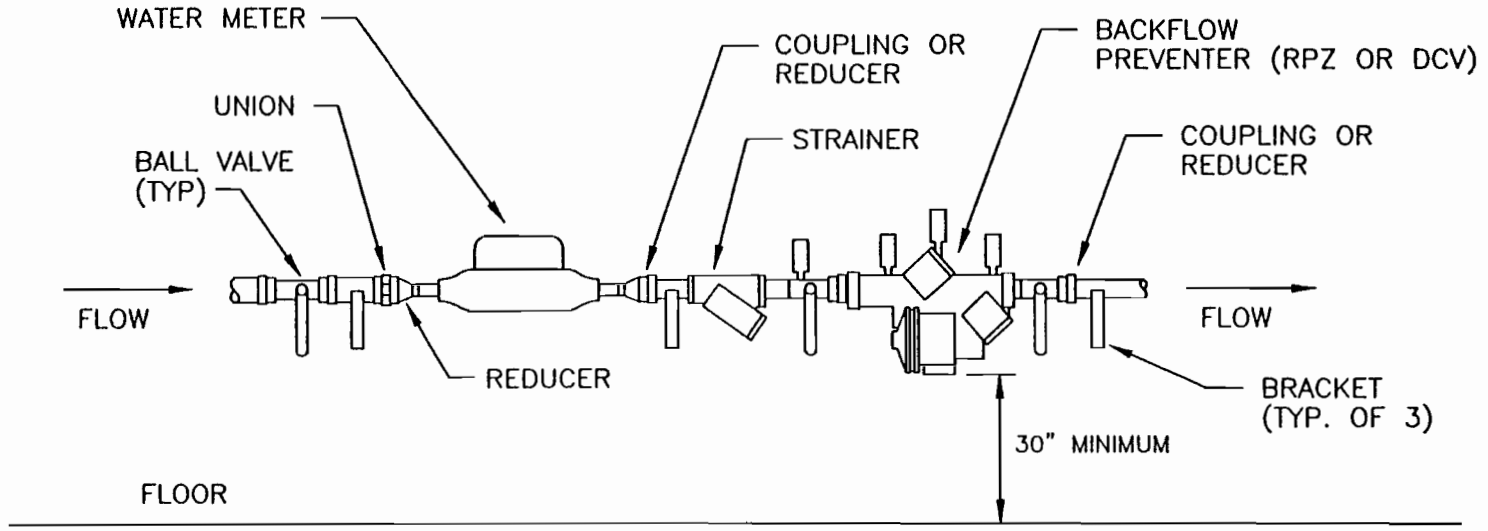

WATER METER AND BACKFLOW PREVENTER

N.T.S.

1. ANGLE BRACKETS SHALL BE MOUNTED TO WALL AND PIPE SECURED WITH U-BOLTS.
2. RPZ'S SHALL HAVE DRAIN LINE INSTALLED (SEE PLAN VIEW) WITH AIR GAP DRAIN CUP BELOW VENT PORT.
3. CONTRACTOR MAY PUT BACKFLOW PREVENTER ABOVE METER IF THERE IS INSUFFICIENT ROOM TO INSTALL HORIZONTALLY.
4. BACKFLOW PREVENTER SHALL BE 3" TO 6" OFF FACE OF WALL.

Stearns & Wheler, LLC
ENVIRONMENTAL ENGINEERS & SCIENTISTS
CAZENOVIA, NEW YORK

DATE: 5/99 JOB No.:70318KD

BACKFLOW PREVENTER INSTALLATION
LEHIGH VALLEY RR DERAILMENT SITE
MCWA / LCWSA

WATER METER AND BACKFLOW PREVENTER
STANDARD INSTALLATION DETAIL

IEW YORK STATE DEPARTMENT OF HEALTH
reau of Public Water Supply Protection

Report on Test and Maintenance of Backflow Prevention Device

JUN 25 2003

For the year 2003
☑ Initial test - *Complete entire form*
☐ Annual test - *Complete Part A only*

ART

Please use a separate form for each device.

ublic ter Supply	Account No.	County	Block	Lot
Monroe County Wat. Auth.		Livingston		

acility Name Preferred Elec. Motors
ddress 2521 Cal-LeRoy Rd Caledonia, NY 14423
street city zip

Location of Device 1st Floor
Mens Toilet Rm.

evice formation	Manufacturer	Type	Model	Size (in inches)	Serial Number
	Febco	☑ RPZ ☐ DCV	860	1	H 01502

	Check Valve No.	Check Valve No.	Differential Pressure Relief Valve	Line Pressure 42 psi
	Leaked ☐ Closed tight ☑	Leaked ☐ Closed tight ☑	Opened at 3.5 psid	Date 06 18 03 (m d y)
	Pressure drop across first check valve 7.5 psid			
				Repaired by Name ____ Lic # ____ Date repaired ☐☐ ☐☐ ☐☐ (m d y)
	Closed tight ☐	Closed tight ☐	Opened at ____ psid	Date ☐☐ ☐☐ ☐☐ (m d y)
	Pressure drop across first check valve ____ psid			

ter Meter Number	Meter Reading	Type of Service: (check one)
77626298	0001080	☑ Domestic ☐ Fire ☐ Other ____

narks (Describe deficiencies: bypasses, outlets before the device, connections between the device and point of entry, missing or inadequate airgap, etc.)

tification: This device ☑ meets, ☐ does NOT meet, the requirements of an acceptable containment device at the time of testing
I hereby certify the foregoing data to be correct.

Name	Certified Tester No.	Signature	Expiration Date
Carl Fisher	02612	[signature]	10/31/03

erty owner's (or owner's agent) certification that test was performed:

Name	Title	Signature	Telephone
Mary B Alent	Owner	[signature]	585 5382768

RT B Certification that installation is in accordance with the approved plans. (To be completed by the design engineer or architect or water supplier.)

eby certify that this installation is in accordance with the approved plans.

Name C. Michael Elliott	Title Director, Waterworks	Date 06 27 03 (m d y)	NYS DOH Log # ____
License Number 55513	Phone (315) 655-8161		
Re enting Stearns + Wheler, LLC		Describe minor installation changes	
d One Remington Park Drive			
City Cazenovia	State NY	Zip 13035	
Signature [signature]			

TE: Send one completed copy to the designated health department representative and one copy to the water supplier within 30 days of testing the device.
013 (9/91) **Notify owner and water supplier immediately if device fails test and repairs cannot immediately be made.**

File 70318.5

Application for Approval of Backflow Prevention Device for Livingston County Water and Sewer Authority

Preferred Electric Motors

Water Distribution System
Lehigh Valley Railroad Derailment Site
New York State
Department of Environmental Conservation

Stearns & Wheler, LLC
File No.70318KD
June-99

LIVINGSTON COUNTY DEPARTMENT OF HEALTH
Mount Morris, NY
Date September 7, 1999
These plans for 1-inch RPZ Preferred Electric Motors, Caledonia (T), Part 5, NYS
Are hereby approved pursuant to Sanitary Code, subject to the provisions of the Approval of Plans issued this day.
For the Public Health Director
Thomas C. Clark PE
Sanitary Engineer

Table of Contents

Engineering Report
Site and Building Plan
Backflow Preventer Installation

Stearns & Wheler, LLC
ENVIRONMENTAL ENGINEERS & SCIENTISTS

ENGINEERING REPORT

APPLICATION FOR APPROVAL OF A BACKFLOW PREVENTION DEVICE
LIVINGSTON COUNTY WATER AND SEWER AUTHORITY
WATER DISTRIBUTION SYSTEM
LEHIGH VALLEY RAILROAD DERAILMENT SITE
NYSDEC

June 15, 1999
S&W No. 70318.0

---

1. **Facility**

Preferred Electric Motors
2521 Caledonia-LeRoy Road
Caledonia, NY 14423
Owner: Murray Alent
(716) 538-2760

Facility is a garage and motor parts shop. Water service is supplied to the 50' x 90' one-story building. No other buildings are on site.

2. **Water Uses**

Water uses within the facility include one lavatory and one sink.

3. **Domestic Fire Service**

There is no domestic fire service within the facility.

4. **Fire Fighting System**

There is no fire fighting system within the facility.

5. **Heating and Cooling**

The facility is heated with natural gas (forced air) and electric heat. They have one window-mounted electric air conditioner.

6. **Sewage Disposal**

Sewage is disposed via a septic leach field.

7. **Maximum Flow Demand**

The maximum flow demand for this facility is 21,600 gpd (15 gpm).

8. **Underground Irrigation**

No underground irrigation system exists or is proposed.

9. **Pressure**

Pressure prior to installation of the backflow preventer is 48.4 psi and 38.4 psi after installation.

10. **Booster Pumping Station**

No booster pumping station is proposed for this facility.

11. **Description of Backflow and Preventer Installation**

The backflow preventer shall be installed in the lavatory located in the Southeast corner of the facility (see attached drawings). The room is well lighted, heated, and has access for maintenance and testing. The RPZ drain port will daylight through the south wall and discharge onto the ground outside.

12. **Dual Backflow Preventers**

The facility does not need a continuous water supply and, therefore, does not need dual backflow preventers.

13. **Floodplain**

The facility is located well above the 100-year old flood plain.

14. **Degree of Hazard**

The owner of this facility would like to keep his well. Since his well is of unsatisfactory quality, we feel this facility should be rated hazardous and should be equipped with a reduced pressure zone device. The well and associated piping will be physically disconnected from the rest of the facilities water system.

The reduced pressure zone device shall be a 1" Watts model #909M1QT-S.

15. **Engineer's Stamp and Signature**

99/5 CAZ CMS
\\FS2\DATA\CADUSE\70318KD\FIGURE\70318F08.DWG

RPZ = REDUCED PRESSURE ZONE
DCV = DOUBLE CHECK VALVE

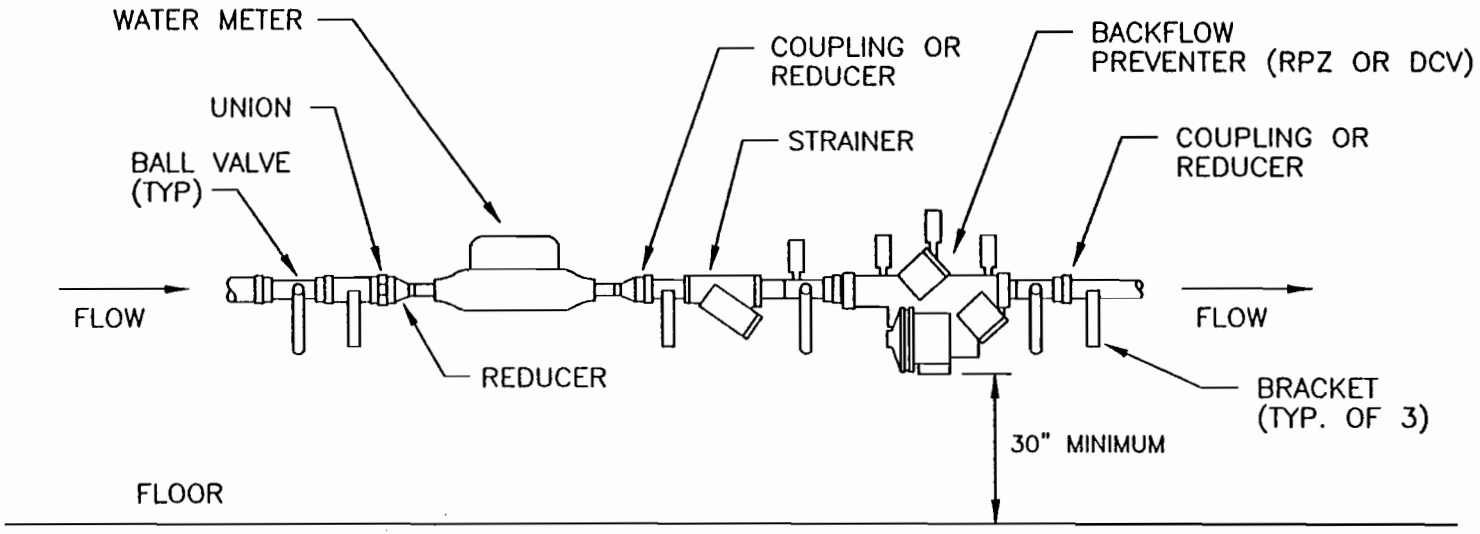

WATER METER AND BACKFLOW PREVENTER

N.T.S.

1. ANGLE BRACKETS SHALL BE MOUNTED TO WALL AND PIPE SECURED WITH U-BOLTS.
2. RPZ'S SHALL HAVE DRAIN LINE INSTALLED (SEE PLAN VIEW) WITH AIR GAP DRAIN CUP BELOW VENT PORT.
3. CONTRACTOR MAY PUT BACKFLOW PREVENTER ABOVE METER IF THERE IS INSUFFICIENT ROOM TO INSTALL HORIZONTALLY.
4. BACKFLOW PREVENTER SHALL BE 3" TO 6" OFF FACE OF WALL.

Stearns & Wheler, LLC
ENVIRONMENTAL ENGINEERS & SCIENTISTS
CAZENOVIA, NEW YORK

DATE: 5/99 JOB No.:70318KD

BACKFLOW PREVENTER INSTALLATION
LEHIGH VALLEY RR DERAILMENT SITE
MCWA / LCWSA

WATER METER AND BACKFLOW PREVENTER
STANDARD INSTALLATION DETAIL

NEW YORK STATE DEPARTMENT OF HEALTH
Bureau of Public Water Supply Protection

Application For Approval of Backflow Prevention Devices

PRINT OR TYPE ALL ENTRIES EXCEPT SIGNATURES
Please complete items 1 through 12a + Block and Lot Numbers

Block # 1 | Lot # 8.11 | FOR DEPARTMENT USE ONLY Log No.

1. Name of Facility: Preferred Electric Motors
2. City, Village, Town: Town
3. County: Livingston
4. Location of Facility: street 2521 Caledonia-Lakeville Road | city Caledonia | state NY | zip 14423
4a. Phone Numbers: (716) 538-2760
Contact Person: Murray Alent
5. Approx. Location of Device(s): Lavatory
6. Mfg. Model #: Watts #909M1QT-S
Size of Device(s): 3/4"

# of Fire Services	# of Domestic Services	# of Combined Services	Total # of Services	Total # of Buildings
0	1	0	1	1

7. Name of Owner: Murray Alent
Title: -
Phone Number: (716)538-2760
Full Mailing Address: street 2521 Caledonia-Lakeville Road | city Caledonia | state NY | zip 14423
Owner's Signature: Murray B Alent Date: m 6 d 11 y 98

8. Nature of works
- [X] Initial Device Installation
- [ ] Replace Existing Device
8a. [ ] New Service [X] Existing Service
8b. [ ] New Building [X] Existing Building [ ] Major Renovation

9. Name of Design Engineer or Architect: Stearns + Wheler, LLC
Address: street One Remington Park Drive | city Cazenovia | state NY | zip 13035
10. NYS License #: [redacted]
[X] PE [ ] RA [ ] Other
10a. Telephone Number(s): (315) 655-8161

University of the State of New York — C. MICHAEL ELLIOTT — No. 055513 — Professional Engineer

Original ink signature and seal required on all copies.
signature
Date: m 7 d 27 y 99

11. Water System Pressure (psi) at Point of Connection: Max 55 Avg 48 Min 40
12. Estimate Installation Cost: $2500
12a. Estimate Design Cost: $2000

13. Degree of Hazard
- [ ] Hazardous
- [ ] Aesthetically Objectionable

List of processes or reasons that lead to degree of hazard checked:

14. Public water supply name: Livingston County Water and Sewer Authority
Name of supplier's designated representative: Frank J. Riedman
Mailing address: street 1997 D'Angelo Drive | city Lakeville | state NY | zip 14480
Title: Chairman of the Board
Telephone No.: (716) 346-3523
Signature*: Frank J Riedman Date: m 8 d 25 y 99
* Your signature endorses proposal

Note: All applications must be accompanied by plans, specifications and an engineer's report describing the project in detail. The project must first be submitted to the water supplier, who will forward it to the local public health engineer. This form must be prepa in quadruplicate with four copies of all plans, specifications and descriptive literature.

DOH-347 (5/91)

Bureau of Public Water Supply Protection

Report on Test and Maintenance of Backflow Prevention Device

For the year 2003

☑ Initial test - *Complete entire form*

☐ Annual test - *Complete Part A only*

PART A Please use a separate form for each device.

Public Water Supply	Account No.	County	Block	Lot
Monroe County Wat. Auth		Livingston		

Facility Name: Gunsmoke Saloon

Address: 2577 Cal.-LeRoy Rd (street) (city) Caledonia (zip) 14423

Location of Device: 1st Floor, Back Room - N Wall

Device Information	Manufacturer	Type	Model	Size (in inches)	Serial Number
	Febco	☐ RPZ ☑ DCV	850	1½	H05456

	Check Valve No. 1	Check Valve No. 2	Differential Pressure Relief Valve	Line Pressure 68 psi
Test before repair	Leaked ☐ Closed tight ☑ Pressure drop across first check valve ____ psid	Leaked ☐ Closed tight ☑	Opened at ____ psid	Date 05 24 03 (m d y)
Describe repairs and materials used				Repaired by: Name ____ Lic # ____ Date repaired ____ (m d y)
Final test	Closed tight ☐ Pressure drop across first check valve ____ psid	Closed tight ☐	Opened at ____ psid	Date ____ (m d y)

Water Meter Number	Meter Reading	Type of Service: (check one)
77289036	0012320	☑ Domestic ☐ Fire ☐ Other ____

Remarks (Describe deficiencies: bypasses, outlets before the device, connections between the device and point of entry, missing or inadequate airgap, etc.)

Certification: This device ☑ meets, ☐ does NOT meet, the requirements of an acceptable containment device at the time of testing

I hereby certify the foregoing data to be correct.

Print Name	Certified Tester No.	Signature	Expiration Date
Carl Fisher	02612	[signature]	10/31/03

Property owner's (or owner's agent) certification that test was performed:

Print Name	Title	Signature	Telephone
Lisa Murphy	Owner	[signature]	(585) 538-2950

PART B Certification that installation is in accordance with the approved plans. (To be completed by the design engineer or architect or water supplier.)

I hereby certify that this installation is in accordance with the approved plans.

NYS DOH Log # ____

Name: C Michael Elliott	Title: Director, Waterworks	Date 04 21 03 (m d y)
License Number: 55513	Phone (315) 655-8161	
Representing: Stearns + Wheler, LLC		Describe minor installation changes
Address: One Remington Park Drive		
City: Cazenovia	State: NY	Zip: 13035
Signature: [signature]		

NOTE: Send one completed copy to the designated health department representative and one copy to the water supplier within 30 days of testing the device.

DOH-1013 (9/91) **Notify owner and water supplier immediately if device fails test and repairs cannot immediately be made.**

File 70318.5

Application for Approval of Backflow Prevention Device for Livingston County Water and Sewer Authority

Gunsmoke Saloon

Water Distribution System
Lehigh Valley Railroad Derailment Site
New York State
Department of Environmental Conservation

Stearns & Wheler, LLC
File No.70318KD
June-99

Table of Contents

Engineering Report
Site and Building Plan
Backflow Preventer Installation

LIVINGSTON COUNTY DEPARTMENT OF HEALTH
Mount Morris, NY

These plans for 1½-inch DCVA, Gunsmoke Saloon, Caledonia (T) Date September 7, 1999
Are hereby approved pursuant to Part 5, NYS Sanitary Code, subject to the provisions of the Approval of Plans issued this day.

For the Public Health Director
Thomas J. Clark PE
Sanitary Engineer

Stearns & Wheler, LLC
ENVIRONMENTAL ENGINEERS & SCIENTISTS

ENGINEERING REPORT

APPLICATION FOR APPROVAL OF A BACKFLOW PREVENTION DEVICE
LIVINGSTON COUNTY WATER AND SEWER AUTHORITY
WATER DISTRIBUTION SYSTEM
LEHIGH VALLEY RAILROAD DERAILMENT SITE
NYSDEC

June 15, 1999
S&W No. 70318.0

---

1. **Facility**

Gunsmoke Saloon
2577 Caledonia-LeRoy Road
Caledonia, NY 14423
Attn: Edward Fosdick
(716) 538-2950

Facility is a bar and also serves food. Water service is supplied to the 60' x 60' one story building. No other buildings are on site.

2. **Water Uses**

Water uses within the facility include lavatories, sinks, and an ice machine.

3. **Domestic Fire Service**

There is no domestic fire service within the facility.

4. **Fire Fighting System**

There is no fire fighting system within the facility.

5. **Heating and Cooling**

The facility is heated with natural gas (forced air) and they have electric window-mounted air conditioners.

6. **Sewage Disposal**

Sewage is disposed via a septic leach field.

7. **Maximum Flow Demand**

The maximum flow demand for this facility is 28,800 gpd (20 gpm).

8. **Underground Irrigation**

No underground irrigation system exists or is proposed.

9. **Pressure**

Pressure prior to installation of the backflow preventer is 59 psi and 55 psi after installation.

10. **Booster Pumping Station**

No booster pumping station is proposed for this facility.

11. **Description of Backflow and Preventer Installation**

The backflow preventer shall be installed in the utility room located on the northwest side of the facility (see attached drawings). The room is lighted, heated, and has access for maintenance and testing.

12. **Dual Backflow Preventers**

The facility does not need a continuous water supply and, therefore, does not need dual backflow preventers.

13. **Floodplain**

The facility is located well above the 100-year old flood plain.

14. **Degree of Hazard**

The water system to this facility is not connected to any hazardous, potentially hazardous, or aesthetically objectionable systems. The on-site well will be abandoned and disconnected from the water system in accordance with NYSDEC regulations. However, since this is a commercial facility and it has a fairly complex plumbing system, we recommend that it be equipped with a double-check valve assembly (see attached drawings).

The double-check valve shall be a 1½" Watts model #007M2QT-S.

15. **Engineer's Stamp and Signature**

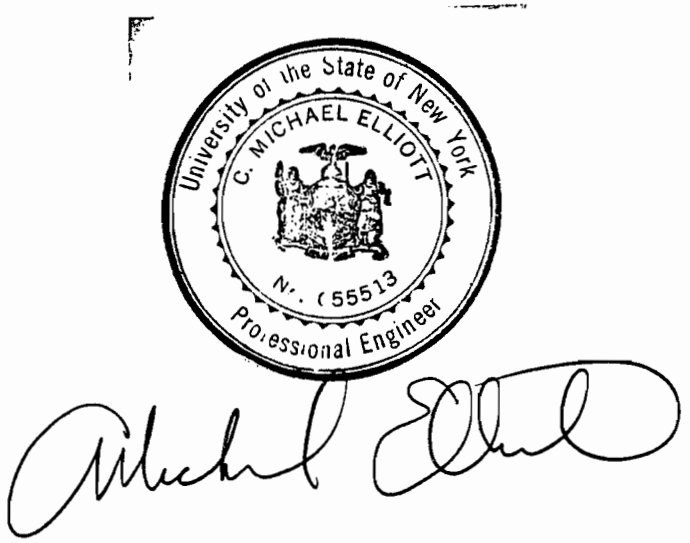

RPZ = REDUCED PRESSURE ZONE
DCV = DOUBLE CHECK VALVE

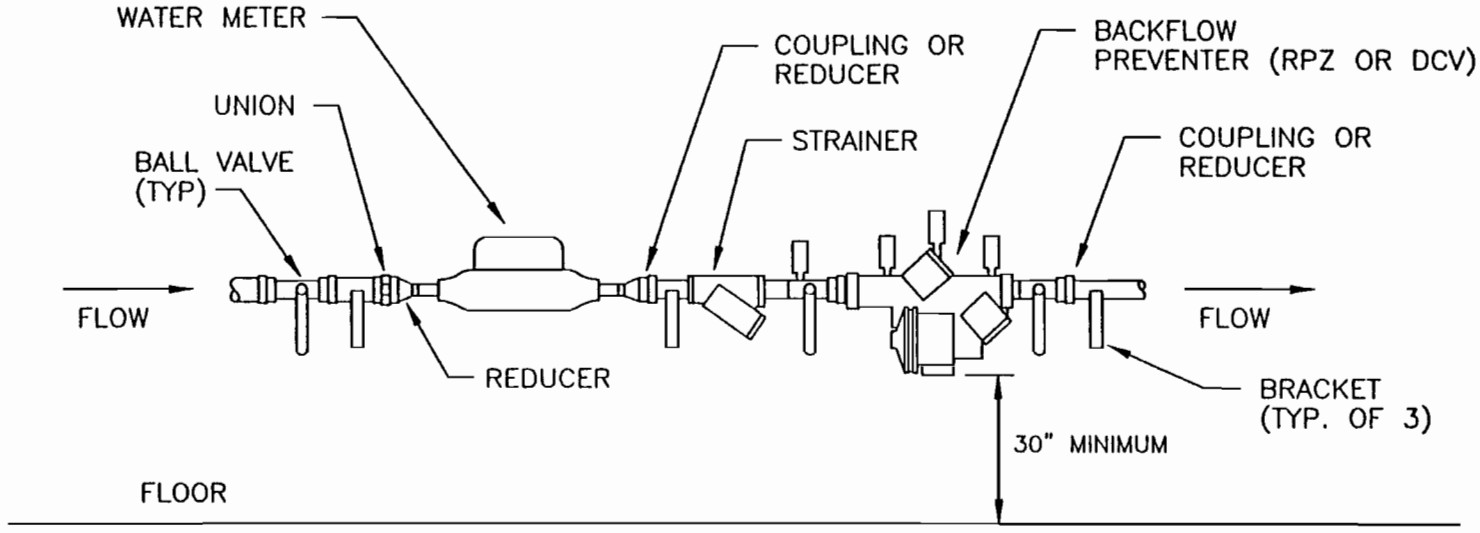

WATER METER AND BACKFLOW PREVENTER

N.T.S.

1. ANGLE BRACKETS SHALL BE MOUNTED TO WALL AND PIPE SECURED WITH U-BOLTS.
2. RPZ'S SHALL HAVE DRAIN LINE INSTALLED (SEE PLAN VIEW) WITH AIR GAP DRAIN CUP BELOW VENT PORT.
3. CONTRACTOR MAY PUT BACKFLOW PREVENTER ABOVE METER IF THERE IS INSUFFICIENT ROOM TO INSTALL HORIZONTALLY.
4. BACKFLOW PREVENTER SHALL BE 3" TO 6" OFF FACE OF WALL.

Stearns & Wheler, LLC
ENVIRONMENTAL ENGINEERS & SCIENTISTS
CAZENOVIA, NEW YORK

DATE: 5/99 JOB No.:70318KD

BACKFLOW PREVENTER INSTALLATION
LEHIGH VALLEY RR DERAILMENT SITE
MCWA / LCWSA

WATER METER AND BACKFLOW PREVENTER
STANDARD INSTALLATION DETAIL

Bureau of Public Water Supply Protection

Report on Test and Maintenance of Backflow Prevention Device

For the year 2003

☑ Initial test - *Complete entire form*

☐ Annual test - *Complete Part A only*

PART A Please use a separate form for each device.

c Water Supply	Account No.	County	Block	Lot
Monroe County Wat. Auth		Livingston		

Facility Name: Caledonia Garage

Address: 2792 W Main St. Caledonia, NY 14423 (street / city / zip)

Location of Device: N. East corner of Bldg

Device Information	Manufacturer	Type	Model	Size (in inches)	Serial Number
	Febco	☑ RPZ ☐ DCV	860	1	H07351

	Check Valve No. 1	Check Valve No. 2	Differential Pressure Relief Valve	Line Pressure 72 psi
Test before repair	Leaked ☐ Closed tight ☑ Pressure drop across first check valve 6 psid	Leaked ☐ Closed tight ☑	Opened at 3 psid	Date 12/24/03 (m d y)
Describe repairs and materials used				Repaired by: Name ____ Lic # ____ Date repaired ____ (m d y)
Final test	Closed tight ☐ Pressure drop across first check valve ____ psid	Closed tight ☐	Opened at ____ psid	Date ____ (m d y)

Water Meter Number: 7732372l

Meter Reading: 0000940

Type of Service: (check one) ☑ Domestic ☐ Fire ☐ Other ____

Remarks (Describe deficiencies: bypasses, outlets before the device, connections between the device and point of entry, missing or inadequate airgap, etc.)

Certification: This device ☑ meets, ☐ does NOT meet, the requirements of an acceptable containment device at the time of testing

I hereby certify the foregoing data to be correct.

Print Name	Certified Tester No.	Signature	Expiration Date
Carl Fisher	02612		10/31/03

Property owner's (or owner's agent) certification that test was performed:

Print Name	Title	Signature	Telephone
Russell W. Barbour	OWNER	Russell W Barbour	585-538-2890

PART B Certification that installation is in accordance with the approved plans. (To be completed by the design engineer or architect or water supplier.)

I hereby certify that this installation is in accordance with the approved plans.

NYS DOH Log # ____

Name: Michael Elliott	Title: Director water works	Date: 04/21/03 (m d y)
License Number: 55513	Phone (315) 655-8161	
Representing: Stearns + Wheler, LLC		Describe minor installation changes
Address: 2nd Remington Park Drive		
City: Cazenovia	State: NY	Zip: 13035
Signature:		

NOTE: Send one completed copy to the designated health department representative and one copy to the water supplier within 30 days of testing the device.

DOH-1013 (9/91) Notify owner and water supplier immediately if device fails test and repairs cannot immediately be made.

File 70318.5

Application for Approval of Backflow Prevention Device for Livingston County Water and Sewer Authority

Caledonia Garage

Water Distribution System
Lehigh Valley Railroad Derailment Site
New York State
Department of Environmental Conservation

Stearns & Wheler, LLC
File No.70318KD
June-99

LIVINGSTON COUNTY DEPARTMENT OF HEALTH
Mount Morris, NY
Date September 7, 1999
These plans for 1-inch RPZ, Caledonia Garage, Caledonia (T)
Are hereby approved pursuant to Part 5, NYS Sanitary Code, subject to the provisions of the Approval of Plans issued this day.
For the Public Health Director
Thomas H Clark PE
Sanitary Engineer

Table of Contents

Engineering Report
Site and Building Plan
Backflow Preventer Installation

Stearns & Wheler, LLC
ENVIRONMENTAL ENGINEERS & SCIENTISTS

ENGINEERING REPORT

APPLICATION FOR APPROVAL OF A BACKFLOW PREVENTION DEVICE
LIVINGSTON COUNTY WATER AND SEWER AUTHORITY
WATER DISTRIBUTION SYSTEM
LEHIGH VALLEY RAILROAD DERAILMENT SITE
NYSDEC

June 15, 1999
S&W No. 70318.0

---

1. **Facility**

Caledonia Garage
2792 West Main Street
Caledonia, NY 14423
Owner: Russell Barber
(716) 538-2890

Facility is an auto repair garage. Water service is supplied to a 75' x 60' 1½-story building. No other buildings are on site.

2. **Water Uses**

Water uses within the facility include lavatories and sinks.

3. **Domestic Fire Service**

There is no domestic fire service within the facility.

4. **Fire Fighting System**

There is no fire fighting system within the facility.

5. **Heating and Cooling**

The facility is heated with natural gas and oil (forced air). There are no cooling systems.

6. **Sewage Disposal**

Sewage is disposed via a septic leach field.

7. **Maximum Flow Demand**

The maximum flow demand for this facility is 21,600 gpd (15 gpm).

8. **Underground Irrigation**

No underground irrigation system exists or is proposed.

9. **Pressure**

Pressure prior to installation of the backflow preventer is 71.1 psi and 66.1 psi after installation.

10. **Booster Pumping Station**

No booster pumping station is proposed for this facility.

11. **Description of Backflow and Preventer Installation**

The backflow preventer shall be installed in the northeast corner of the garage (see attached drawings). The room is well lighted, heated, and has access for maintenance and testing. The RPZ drain port will daylight through the east wall and discharge onto the ground outside.

12. **Dual Backflow Preventers**

The facility does not need a continuous water supply and, therefore, does not need dual backflow preventers.

13. **Floodplain**

The facility is located well above the 100-year old flood plain.

14. **Degree of Hazard**

The owner of this facility would like to keep his well. Since his well is of unsatisfactory quality, we feel this facility should be rated hazardous and should be equipped with a reduced pressure zone device. The well and associated piping will be physically disconnected from the rest of the facility's water system.

The reduced pressure zone device shall be a 1" Watts model #909M1QT-S.

15. **Engineer's Stamp and Signature**

RPZ = REDUCED PRESSURE ZONE
DCV = DOUBLE CHECK VALVE

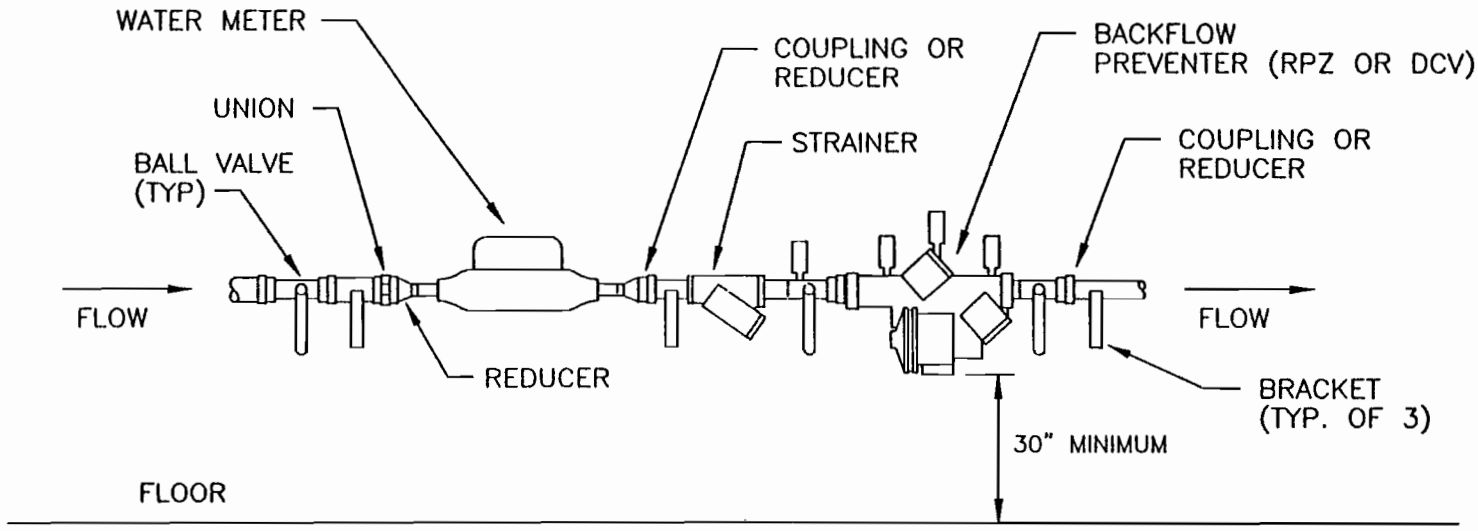

WATER METER AND BACKFLOW PREVENTER

N.T.S.

1. ANGLE BRACKETS SHALL BE MOUNTED TO WALL AND PIPE SECURED WITH U-BOLTS.
2. RPZ'S SHALL HAVE DRAIN LINE INSTALLED (SEE PLAN VIEW) WITH AIR GAP DRAIN CUP BELOW VENT PORT.
3. CONTRACTOR MAY PUT BACKFLOW PREVENTER ABOVE METER IF THERE IS INSUFFICIENT ROOM TO INSTALL HORIZONTALLY.
4. BACKFLOW PREVENTER SHALL BE 3" TO 6" OFF FACE OF WALL.

Stearns & Wheler, LLC
ENVIRONMENTAL ENGINEERS & SCIENTISTS
CAZENOVIA, NEW YORK

DATE: 5/99 JOB No.:70318KD

BACKFLOW PREVENTER INSTALLATION
LEHIGH VALLEY RR DERAILMENT SITE
MCWA / LCWSA

WATER METER AND BACKFLOW PREVENTER
STANDARD INSTALLATION DETAIL

NEW YORK STATE DEPARTMENT OF HEALTH
Bureau of Public Water Supply Protection

Application For Approval of Backflow Prevention Devices

PRINT OR TYPE ALL ENTRIES EXCEPT SIGNATURES
Please complete items 1 through 12a + Block and Lot Numbers

Block # 1 | Lot # 14.2 | FOR DEPARTMENT USE ONLY Log No.

1. Name of Facility: Caledonia Garage
2. City, Village, Town: Town
3. County: Livingston
4. Location of Facility: street 2792 West Main Street | city Caledonia | state NY | zip 14423
4a. Phone Numbers: (716) 538-2890
Contact Person: Russell Barber
5. Approx. Location of Device(s): NE corner of Garage
6. Mfg. Model #: Watts #909M1QT-S
Size of Device(s): 1"

# of Fire Services	# of Domestic Services	# of Combined Services	Total # of Services	Total # of Buildings
0	1	0	1	1

7. Name of Owner: Russell Barber | Title | Phone Number: (716) 538-2890
Full Mailing Address: street 2792 West Main Street | city Caledonia | state NY | zip 14423
Owner's Signature: Russell Barber Date: m 8 d 16 y 99

8. Nature of works
- ☒ Initial Device Installation
- ☐ Replace Existing Device

8a.
- ☐ New Service
- ☒ Existing Service

8b.
- ☐ New Building
- ☒ Existing Building
- ☐ Major Renovation

9. Name of Design Engineer or Architect: Stearns + Wheler, LLC
Address: street One Remington Park Drive | city Cazenovia | state NY | zip 13035

University of the State of New York — C. MICHAEL ELLIOTT — No. 055513 — Professional Engineer

Original ink signature and seal required on all copies.

signature

10. NYS License #: 57573
☒ PE ☐ RA ☐ Other
10a. Telephone Number(s): (315) 655-8161
Date: m 7 d 27 y 99

11. Water System Pressure (psi) at Point of Connection: Max 75 Avg 71 Min 60
12. Estimate Installation Cost: $1,500
12a. Estimate Design Cost: $2,000

13. Degree of Hazard
- ☐ Hazardous
- ☐ Aesthetically Objectionable

List of processes or reasons that lead to degree of hazard checked:

14. Public water supply name: Livingston County Water and Sewer Authority
Mailing address: street 1997 D'Angelo Drive | city Lakeville | state NY | zip 14480
Telephone No. (716) 346-3523

Name of supplier's designated representative: Frank J. Riedman
Title: Chairman of the Board
Signature*: Frank J. Riedman Date: m 8 d 12 y 99
* Your signature endorses proposal

Note: All applications must be accompanied by plans, specifications and an engineer's report describing the project in detail. The project must first be submitted to the water supplier, who will forward it to the local public health engineer. This form must be prepa in quadruplicate with four copies of all plans, specifications and descriptive literature.

DOH-347 (5/91)

Bureau of Public Water Supply Protection

# of Backflow Prevention Device

For the year 2003

☑ Initial test - *Complete entire form*

☐ Annual test - *Complete Part A only*

PART A Please use a separate form for each device.

Water Supply	Account No.	County	Block	Lot
Genesee County Wat. Auth.		Genesee		

Facility Name: Margaret Tamasi

Address: 8825 Church Rd street, LeRoy NY city 14482 zip

Location of Device: Basement - West Wall

Device Information	Manufacturer	Type	Model	Size (in inches)	Serial Number
	Febco	☑ RPZ ☐ DCV	860	1	H05649

	Check Valve No. 1	Check Valve No. 2	Differential Pressure Relief Valve	Line Pressure 6.1 psi
Test before repair	Leaked ☐ Closed tight ☑ Pressure drop across first check valve 7.5 psid	Leaked ☐ Closed tight ☑	Opened at 3 psid	Date 02 25 03 (m d y)
Describe repairs and materials used				Repaired by Name ____ Lic # ____ Date repaired ____ (m d y)
Final test	Closed tight ☐ Pressure drop across first check valve ____ psid	Closed tight ☐	Opened at ____ psid	Date ____ (m d y)

Water Meter Number	Meter Reading	Type of Service: (check one)
77508464	0000020	☑ Domestic ☐ Fire ☐ Other ____

Remarks (Describe deficiencies: bypasses, outlets before the device, connections between the device and point of entry, missing or inadequate airgap, etc.)

Certification: This device ☑ meets, ☐ does NOT meet, the requirements of an acceptable containment device at the time of testing

I hereby certify the foregoing data to be correct.

Print Name	Certified Tester No.	Signature	Expiration Date
Carl Fisher	02612	[signature]	10/31/03

Property owner's (or owner's agent) certification that test was performed:

Print Name	Title	Signature	Telephone
Margaret Tamasi	Home owner	Margaret Tamasi	(585) 768-6009

PART B Certification that installation is in accordance with the approved plans. (To be completed by the design engineer or architect or water supplier.)

I hereby certify that this installation is in accordance with the approved plans.

NYS DOH Log # 16305

Name: C. Michael Elliott	Title: Director, Waterworks	Date 04 21 03 (m d y)
License Number: 55513	Phone (315) 655-8161	
Representing: Stearns + Wheler, LLC		Describe minor installation changes
Address: One Remington Park Drive		
City: Cazenovia	State: NY	Zip: 13035
Signature: [signature]		

NOTE: Send one completed copy to the designated health department representative and one copy to the water supplier within 30 days of testing the device.

DOH-1013 (9/91) **Notify owner and water supplier immediately if device fails test and repairs cannot immediately be made.**

STATE OF NEW YORK
DEPARTMENT OF HEALTH

Flanigan Square, 547 River Street, Troy, New York 12180-2216

Antonia C. Novello, M.D., M.P.H., Dr.P.H.
Commissioner

Dennis P. Whalen
Executive Deputy Commissioner

February 18, 2003

Ms. Margaret Tamasi
8825 Church Road
LeRoy, NY 14482

Re: Log No. 16305
Approval of Plans
1" RPZ in Heated Enclosure
House #8825
8825 Church Road
LeRoy, Genesee County

Dear Ms. Tamasi:

The plans and specifications for the above referenced backflow prevention project have been reviewed and approved by this office subject to the following Conditions of Approval:

A. THAT the proposed works be constructed in complete conformity with the plans and specifications approved this day or approved amendments thereto.

B. THAT any connection made prior to the approved backflow prevention device(s) shall render this approval void.

C. THAT within 45 days of installation, the following steps must be taken: (1) The approved device(s) must be tested by a NYSDOH certified backflow prevention device tester; (2) The completed installation must be certified by the design engineer, architect or water supplier; and (3) The attached form DOH 1013 must be completed and returned to the water supplier.

D. THAT a NYSDOH certified backflow prevention device tester test the approved backflow prevention device(s) at least annually and report the results to the water supplier.

A copy of the approved plans and specifications is being retained in our files, and the remaining copies are being sent to the local health department, the water supplier and your engineer. If you have any questions, please contact this office at (518) 402-7676.

Sincerely,

Michael J. Montysko, P.E.
Chief, Design Section
Bureau of Public Water Supply Protection

SM/bs
cc: Genesee County Health Department, Attn: Mr. Guerin
Monroe County Water Authority, Attn: Mr. Stein
Stearns & Wheler, LLC

144171

NEW YORK STATE DEPARTMENT OF HEALTH
Bureau of Public Water Supply Protection

Application For Approval of Backflow Prevention Devices

PRINT OR TYPE ALL ENTRIES EXCEPT SIGNATURES
Please complete items 1 through 12a + Block and Lot Numbers

Block #	Lot #	FOR DEPARTMENT USE ONLY Log No. 16305

1. Name of Facility: HOUSE # 8825
2. City, Village, Town: TOWN
3. County: GENESEE
4. Location of Facility: street 8825 CHURCH ROAD; city LeROY; state NY; zip 14482
4a. Phone Numbers: 585-768-6009
Contact Person: MARGARET TAMASI
5. Approx. Location of Device(s): within heated enclosure. WEST SIDE OF HOUSE
6. Mfg. Model #: WATTS #909QT-S
Size of Device(s): 1"

# of Fire Services	# of Domestic Services	# of Combined Services	Total # of Services	Total # of Buildings
0	1	0	1	1

7. Name of Owner: MARGARET TAMASI
Title:
Phone Number: 585-768-6009
Full Mailing Address: street 8825 CHURCH ROAD; city LeROY; state NY; zip 14482
Owner's Signature: Margaret Tamasi Date: 10/25/02 (m/d/y)

8. Nature of works
- [x] Initial Device Installation
- [ ] Replace Existing Device

8a.
- [ ] New Service
- [x] Existing Service

8b.
- [ ] New Building
- [x] Existing Building
- [ ] Major Renovation

9. Name of Design Engineer or Architect: STEARNS & WHEELER, LLC
Address: street ONE REMINGTON PARK DRIVE; city CAZENOVIA; state NY; zip 13035

Original ink signature and seal required on all copies.

signature

10. NYS License #: 055513
- [x] PE
- [ ] RA
- [ ] Other

10a. Telephone Number(s): 315-655-8161

Date: 10/29/02 (m/d/y)

11. Water System Pressure (psi) at Point of Connection: Max 60 Avg 54 Min 45
12. Estimate Installation Cost: $3000
12a. Estimate Design Cost: $2000

13. Degree of Hazard
- [x] Hazardous
- [ ] Aesthetically Objectionable

List of processes or reasons that lead to degree of hazard checked: Contaminated / Potentially contaminated existing well on site.

14. Public water supply name: Monroe County Water Authority
Name of supplier's designated representative: Thomas K. Stein
Mailing address: street 475 Norris Drive; city Rochester; state NY; zip 14610
Title: Construction Engineer
Telephone No. (585) 442-2000
Signature*: Thomas K. Stein Date: 12/23/02 (m/d/y)
* Your signature endorses proposal

Note: All applications must be accompanied by plans, specifications and an engineer's report describing the project in detail. The project must first be submitted to the water supplier, who will forward it to the local public health engineer. This form must be prepar in quadruplicate with four copies of all plans, specifications and descriptive literature.

DOH-347 (5/91)

Application for Approval of Backflow Prevention Device For Monroe County Water Authority

Margaret Tamasi

Water Distribution System
LeHigh Valley Railroad Derailment Site
New York State
Department of Environmental Conservation

Stearns & Wheler, LLC
File No. 10209
November 2002

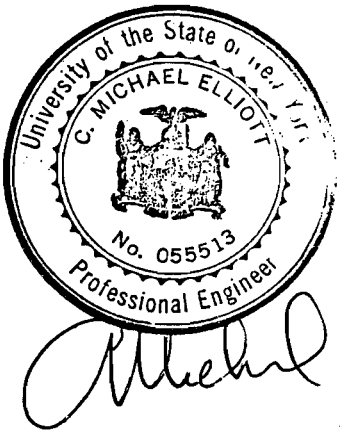

Table of Contents

Engineering Report
Site and Building Plan
Backflow Preventer Installation
Department of Health Form 347

ENGINEER'S REPORT

OWNER

NAME:	Margaret Tamasi
ADDRESS:	8825 Church Road LeRoy, NY 14482
CONTACT PERSON:	Margaret Tamasi
TELEPHONE:	585-768-6009

SITE PLAN ENGINEER (PREPARES SITE PLAN)

NAME:	Stearns & Wheler, LLC
ADDRESS:	One Remington Park Drive Cazenovia, NY 13035
CONTACT PERSON:	Titus J. Falkenburg, P.E.
TELEPHONE:	315-655-8161

MECHANICAL ENGINEER (PREPARES INSIDE PLUMBING)

NAME:	Stearns & Wheler, LLC
ADDRESS:	One Remington Park Drive Cazenovia, NY 13035
CONTACT PERSON:	Titus J. Falkenburg, P.E.
TELEPHONE:	315-655-8161

CONTRACTOR:

NAME:	Milherst Construction, Inc.
ADDRESS:	P.O. BOX 631 2601 Millersport Highway Getzville, NY 14068-0631
CONTACT PERSON:	Charles Kubiniec
TELEPHONE:	716-688-9098

MAR. 20 99(FRI) 10:05 MOWA OPER CENTER 1.000

ENGINEER'S REPORT

FOR APPROVAL OF REDUCED PRESSURE ZONE BACKFLOW PREVENTER

Please complete this report and include it in your Final Design for Backflow approval.

Please answer either YES or NO to questions 1 - 6 Below.

	Y	N	
1.	☐	☒	Does the Facility require a continuous water supply? (if YES dual Backflow Preventers will be required)
2.	☐	☒	Is the Facility located within the 100-year flood plain? (A Reduced Pressure Zone (RPZ) Backflow prevention device must be installed 12-inches above the 100-year flood plain)
3.	☒	☐	Will the area where the Backflow Preventer is located, be adequately heated to prevent freezing?
4.	☒	☐	Will the area where the backflow Preventer is located, be adequately lighted to allow for maintenance and testing of the device(s).
5.	☒	☐	Will the Backflow Preventer be located in a vault, basement and/or located below grade where a drain is necessary to accommodate the relief port? (If Yes, Please answer Questions 5A).
5A.	☐	☒	Will the RPZ Drain to a crock or other holding container which will require pumping to final discharge? If Yes, Please describe:____ _____
6.	☒	☐	Is the drain for the RPZ Relief Port adequately sized to accommodate a full discharge (dump) from the relief port without flooding the surrounding area.

7. Pleased indicate to where does the RPZ Relief Port discharge (Drain)?

- ☐ Sanitary Sewer Lateral
- ☐ Storm Sewer Lateral
- ☒ Outside Grade
- ☐ Private Septic System
- ☐ Other _____

8. What is the water pressure (psi) at the facility upstream and downstream of the proposed backflow prevention device(s) both domestic and fire during maximum flow conditions.

Domestic RPZ ☐NA (Check if Domestic Service has been determined to be non-hazardous)

54 Upstream (PSI) Make & Model No. of Proposed RPZ WATTS #909QT-S

44 Downstream (PSI) Size of Backflow Preventer 1 IN

Maximum Domestic Demand (GPM) = 15

Fire Service RPZ ☒NA (Check if there is no Fire Service or if the Fire Service has been determined to be non-hazardous

____ Upstream (PSI) Make & Model No. of Proposed RPZ _____

____ Downstream (PSI) Size of Backflow Preventer _____

Maximum Fire Flow Demand (GPM) = ____

9. Date of Completion of this report 10/29/2

Use Box Below for Engineer's Stamp and Signature

University of the State of New York
C. MICHAEL ELLIOTT
No. 055513
Professional Engineer

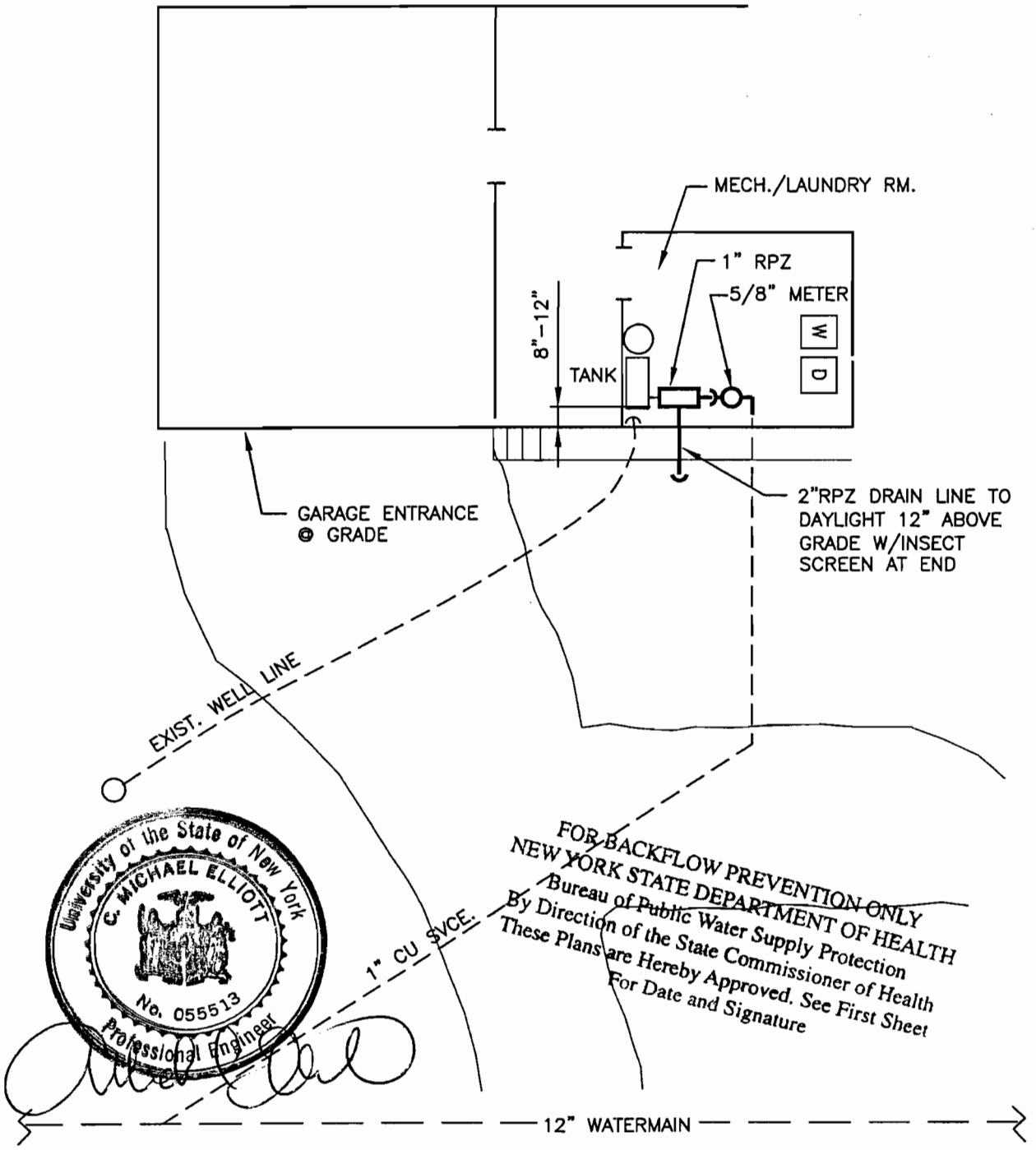

University of the State of New York
C. MICHAEL ELLIOTT
No. 055513
Professional Engineer

FOR BACKFLOW PREVENTION ONLY
NEW YORK STATE DEPARTMENT OF HEALTH
Bureau of Public Water Supply Protection
By Direction of the State Commissioner of Health
These Plans are Hereby Approved. See First Sheet
For Date and Signature

PLAN VIEW

NOT TO SCALE

N

Stearns & Wheler, LLC
Environmental Engineers and Scientists

CAZENOVIA, NEW YORK

DATE:11/02 JOB No.:10209.50

BACKFLOW PREVENTER INSTALLATION
LEHIGH VALLEY RR DERAILMENT SITE
MONROE COUNTY WATER AUTHORITY

HOUSE NO.8825 CHURCH ROAD
PLAN VIEW

11/02 CAZ RC
M:\10209\FIGURE\10209F03.DWG

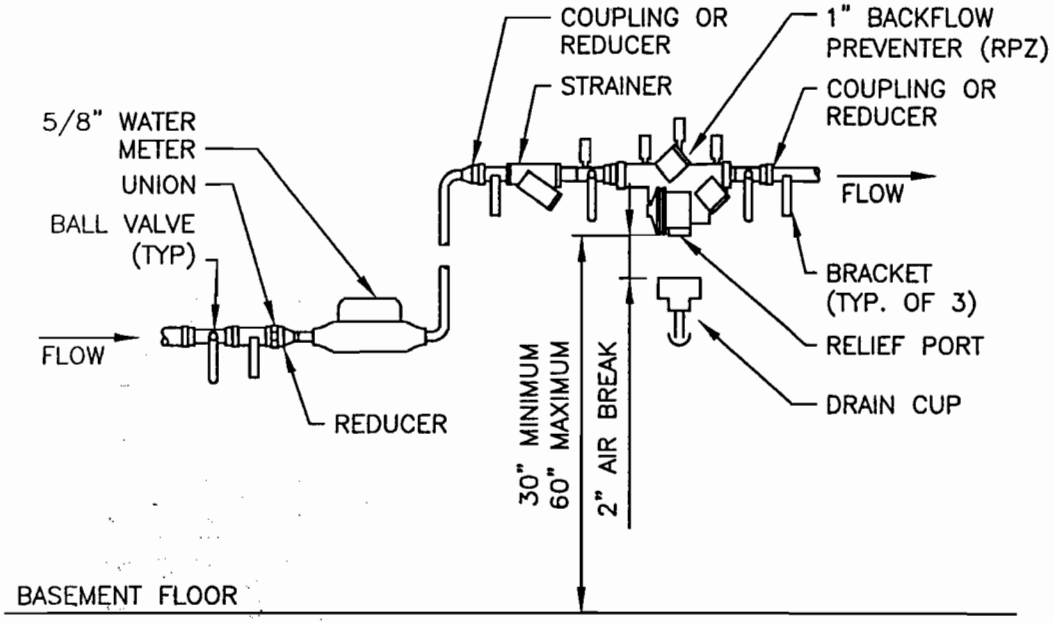

NOTE: SEE SIDE ELEVATION VIEW FOR VERTICAL/HORIZONTAL CLEARANCES.

RPZ = REDUCED PRESSURE ZONE

FRONT ELEVATION VIEW

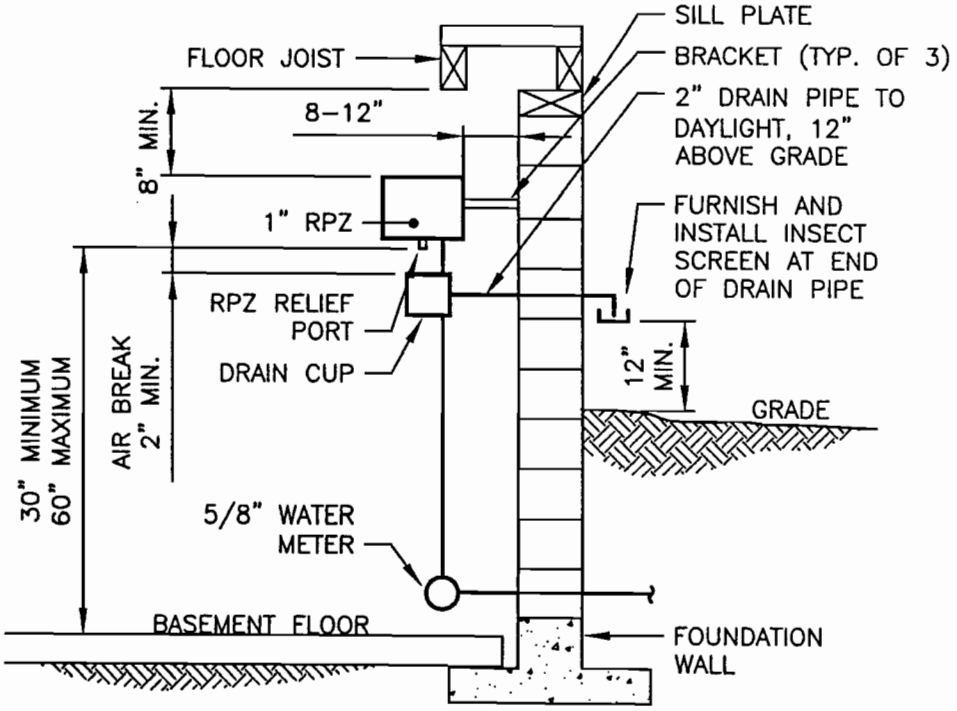

SIDE ELEVATION VIEW

WATER METER AND BACKFLOW PREVENTER

NOT TO SCALE

1. ANGLE BRACKETS SHALL BE MOUNTED TO WALL AND PIPE SECURED WITH U-BOLTS.
2. BACKFLOW PREVENTER SHALL BE 8" TO 12" OFF FACE OF WALL.

Stearns & Wheler, LLC
Environmental Engineers and Scientists
CAZENOVIA, NEW YORK

DATE: 11/02 JOB No.:10290.50

BACKFLOW PREVENTER INSTALLATION
LEHIGH VALLEY RR DERAILMENT SITE
MCWA / LCWSA

HOUSE NO.8825 CHURCH ROAD
WATER METER AND BACKFLOW PREVENTER
ELEVATION VIEW

APPROVED

☑ FOR BACKFLOW PREVENTION ONLY

☐ ~~AS NOTED ON PLANS~~

NEW YORK STATE DEPARTMENT OF HEALTH

Bureau of Public Water Supply Protection

Date 7/18/03 By _____

Chief, Design Section

Log # 16305

Bureau of Public Water Supply Protection

# of Backflow Prevention Device

For the year 2003

☑ Initial test - *Complete entire form*

☐ Annual test - *Complete Part A only*

PART A Please use a separate form for each device.

Public Water Supply	Account No.	County	Block	Lot
Monroe County Wat. Auth.		Monroe		

Facility Name Stephen Scott

Address 75 Lime Rock Rd street LeRoy NY city zip 14482

Location of Device Basement - East Wall

Device Information	Manufacturer	Type	Model	Size (in inches)	Serial Number
	Febco	☑ RPZ ☐ DCV	860	1	H05783

	Check Valve No. 1	Check Valve No. 2	Differential Pressure Relief Valve	Line Pressure
Test before repair	Leaked ☐ Closed tight ☑ Pressure drop across first check valve 10 psid	Leaked ☐ Closed tight ☑	Opened at 3 psid	Line Pressure 61 psi; Date 12 23 03 (m d y)
Describe repairs and materials used				Repaired by Name ____ Lic # ____ Date repaired ☐☐ ☐☐ ☐☐ (m d y)
Final test	Closed tight ☐ Pressure drop across first check valve ____ psid	Closed tight ☐	Opened at ____ psid	Date ☐☐ ☐☐ ☐☐ (m d y)

Water Meter Number 77323667 | Meter Reading 0001470 | Type of Service: (check one) ☑ Domestic ☐ Fire ☐ Other ____

Remarks (Describe deficiencies: bypasses, outlets before the device, connections between the device and point of entry, missing or inadequate airgap, etc.)

Certification: This device ☑ meets, ☐ does NOT meet, the requirements of an acceptable containment device at the time of testing

I hereby certify the foregoing data to be correct.

Print Name	Certified Tester No.	Signature	Expiration Date
Carl Fisher	02612	[signature]	10/31/03

Property owner's (or owner's agent) certification that test was performed:

Print Name	Title	Signature	Telephone
Cynthia A Scott	Homeowner	Cynthia A Scott	(585) 538-6725

PART B Certification that installation is in accordance with the approved plans. (To be completed by the design engineer or architect or water supplier.)

I hereby certify that this installation is in accordance with the approved plans.

NYS DOH Log # ____

Name	Title	Date
C. Michael Elliott	Director, Waterworks	04 21 03 (m d y)
License Number 55513	Phone (315) 655-8161	
Representing Stearns + Wheler, LLC		
Address One Remington Park Drive		
City Cazenovia	State NY	Zip 13035
Signature [signature]		

Describe minor installation changes

NOTE: Send one completed copy to the designated health department representative and one copy to the water supplier within 30 days of testing the device.

DOH-1013 (9/91) **Notify owner and water supplier immediately if device fails test and repairs cannot immediately be made.**

MONROE COUNTY

Department of Health

John D. Doyle
County Executive

Andrew S. Doniger, M.D., M.P.H.
Director

RECEIVED
STEARNS & WHELER L.L.C.
JAN 15 2003

January 13, 2003

Cynthia Scott
75 Lime Rock Road
LeRoy, New York 1482

RE: Approval of plans for the installation
of backflow prevention device(s)
Scott Residence @ 75 Lime Rock Road, Wheatland (T)

Dear Cynthia:

The plans and specifications for the above project have been reviewed and approved by this Department pursuant to Part 5, Subpart 5-1.31 of the New York State Sanitary Code.

A Certificate of Approval is attached. Also attached is a DOH-1013 form, New York State Department of Health Report on testing and maintenance of Backflow Prevention Devices, which consists of two parts: (A) a place to document the initial test of the device by a New York State Department of Health certified backflow prevention device tester; and (B) a certification by the design engineer or architect that the installation is in accordance with approved plans. Parts A and B must be completed by the certified device tester and the design engineer or architect and returned to this office within 45 days of installation.

Upon receipt of a properly completed DOH-1013 form, the Department of Health will issue a Completed Works Approval. The issuing of the Completed Works Approval finalized the department of Health's backflow plan review process.

If you have any questions, please call me at 274-8079.

Very truly yours,

Lewis LoQuasto
Public Health Sanitarian

Xc: MCWA- Tom Stein
Stearns & Wheler, LLC
File

NEW YORK STATE DEPARTMENT OF HEALTH
CERTIFICATE OF APPROVAL
FOR BACKFLOW PREVENTION DEVICE(S)

This approval is issued under the provisions of 10 NYCRR, Part 5, Subpart 5-1.31:

Facility: Scott Residence	City, Village, Town: 75 Lime Rock Road Wheatland (T)	County: Monroe
Owner's Mailing Address: Cynthia Scott 75 Lime Rock Road LeRoy, New York 14482		
Physical Location of Backflow Prevention Device(s): In basement on Southeast side of house		
Description of Device(s): One (1), Watts 909 (1") reduced pressure principal (zone) assembly		
Supplier of Water Monroe County Water Authority	Tom Stein	
Mailing Address 475 Norris Drive Rochester, New York 14610		

Conditions of approval:

A. THAT within 45 days of installation, the attached certification, DOH 1013 Form, will be completed and returned to the water supplier and the Monroe County Department of Health, Bureau of Public Health Engineering, P.O. Box 92832, 111 Westfall Road. Rochester, New York 14692-8932.

B. THAT a certified backflow prevention device tester test the above backflow prevention device(s) at least yearly and report the results to the water purveyor indicated above and the Monroe County Department of Health at the address listed in condition A.

C. THAT any connection made prior to the backflow prevention device(s) shall render this approval void.

D. THAT the proposed works be constructed in conformance with the plans and specifications approved this day and any amendments thereto.

E. THAT this Certificate of Approval is granted with the understanding that the approved plans are subject to review and re-approval after two years from the date of approval, if installation is not completed by that time.

ISSUED FOR THE STATE
COMMISSIONER OF HEALTH BY:

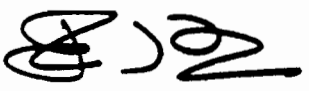

John J. Frazer, P.E.
Senior Public Health Engineer

Date: 01/13/03
DOH 1023 (4/85)
Monroe County Version (2/99)

NEW YORK STATE DEPARTMENT OF HEALTH 144209
Bureau of Public Water Supply Protection

Application For Approval o Backflow Prevention Device

PRINT OR TYPE ALL ENTRIES EXCEPT SIGNATURES
Please complete items 1 through 12a + Block and Lot Numbers

Block #	Lot #	FOR DEPARTMENT USE ONLY Log No.

1. Name of Facility: HOUSE # 75
2. City, Village, Town: TOWN
3. County: ~~GENESEE~~ ~~MONROE~~ MONROE
4. Location of Facility: street 75 LIME ROCK ROAD; city WHEATLAND; state NY; zip 14482
4a. Phone Numbers: 585-538-6729
Contact Person:
5. Approx. Location of Device(s): within heated enclosure (Basement) SOUTHEAST SIDE OF HOUSE
6. Mfg. Model #: WATTS #909QT-S
Size of Device(s): 1"

# of Fire Services	# of Domestic Services	# of Combined Services	Total # of Services	Total # of Buildings
0	1	0	1	1

7. Name of Owner: STEVEN SCOTT (Stephen)
Title:
Phone Number: 585-538-6729
Full Mailing Address: street 75 LIME ROCK ROAD; city WHEATLAND; state NY; zip 14482
Owner's Signature: Cynthia A Scott Date: m d y 10/25/02

8. Nature of works
- ☒ Initial Device Installation
- ☐ Replace Existing Device
- 8a. ☐ New Service ☒ Existing Service
- 8b. ☐ New Building ☒ Existing Building ☐ Major Renovation

9. Name of Design Engineer or Architect: STEARNS & WHEELER, LLC
Address: street ONE REMINGTON PARK DRIVE; city CAZENOVIA; state NY; zip 13035
University of the State of New York — C. MICHAEL ELLIOTT — No. C55513 — Professional Engineer
Original ink signature and seal required on all copies.
signature
10. NYS License #: 055513
☒ PE ☐ RA ☐ Other
10a. Telephone Number(s): 315-655-8161
Date: 10/29/2

11. Water System Pressure (psi) at Point of Connection: Max 65 Avg 63 Min 55
12. Estimate Installation Cost: $3000
12a. Estimate Design Cost: $2000

13. Degree of Hazard
- ☒ Hazardous
- ☐ Aesthetically Objectionable

List of processes or reasons that lead to degree of hazard checked: Contaminated / Potentially Contaminated existing well on site

14. Public water supply name: Monroe County Water Authority
Name of supplier's designated representative: Thomas K. Stein
Mailing address: street 475 Norris Drive; city Rochester; state NY; zip 14610
Title: Construction Engineer
Telephone No. (585) 442-2000
Signature*: Thomas K. Stein Date: m d y 12/23/02
* Your signature endorses proposal

Note: All applications must be accompanied by plans, specifications and an engineer's report describing the project in detail. The project must first be submitted to the water supplier, who will forward it to the local public health engineer. This form must be prepar in quadruplicate with four copies of all plans, specifications and descriptive literature.

Application for Approval of Backflow Prevention Device For Monroe County Water Authority

Stephen Scott

Water Distribution System
Lehigh Valley Railroad Derailment Site
New York State
Department of Environmental Conservation

Stearns & Wheler, LLC
File No. 10209
November 2002

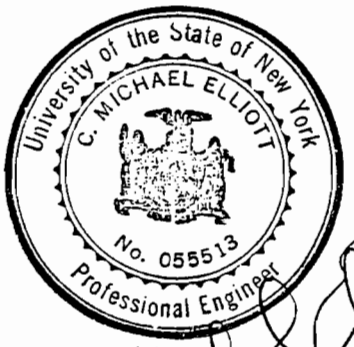

Table of Contents

Engineering Report
Site and Building Plan
Backflow Preventer Installation
Department of Health Form 347

ENGINEER'S REPORT

OWNER

NAME: Stephen Scott

ADDRESS: 75 Lime Rock Road
LeRoy, NY 14482

CONTACT PERSON: Stephen Scott

TELEPHONE: 585-538-6729

SITE PLAN ENGINEER (PREPARES SITE PLAN)

NAME: Stearns & Wheler, LLC

ADDRESS: One Remington Park Drive
Cazenovia, NY 13035

CONTACT PERSON: Titus J. Falkenburg, P.E.

TELEPHONE: 315-655-8161

MECHANICAL ENGINEER (PREPARES INSIDE PLUMBING)

NAME: Stearns & Wheler, LLC

ADDRESS: One Remington Park Drive
Cazenovia, NY 13035

CONTACT PERSON: Titus J. Falkenburg, P.E.

TELEPHONE: 315-655-8161

CONTRACTOR:

NAME: Milherst Construction, Inc.

ADDRESS: P.O. BOX 631 2601 Millersport Highway
Getzville, NY 14068-0631

CONTACT PERSON: Charles Kubiniec

TELEPHONE: 716-688-9098

ENGINEER'S REPORT

FOR APPROVAL OF REDUCED PRESSURE ZONE BACKFLOW PREVENTER

Please complete this report and include it in your Final Design for Backflow approval.

Please answer either YES or NO to questions 1 - 6 Below.

	Y	N	
1.	☐	☒	Does the Facility require a continuous water supply? (If YES dual Backflow Preventers will be required)
2.	☐	☒	Is the Facility located within the 100-year flood plain? (A Reduced Pressure Zone (RPZ) Backflow prevention device must be installed 12-inches above the 100-year flood plain)
3.	☒	☐	Will the area where the Backflow Preventer is located, be adequately heated to prevent freezing?
4.	☒	☐	Will the area where the backflow Preventer is located, be adequately lighted to allow for maintenance and testing of the device(s).
5.	☒	☐	Will the Backflow Preventer be located in a vault, basement and/or located below grade where a drain is necessary to accommodate the relief port? (If Yes, Please answer Questions 5A).
5A.	☐	☒	Will the RPZ Drain to a crock or other holding container which will require pumping to final discharge? If Yes, Please describe:____
6.	☒	☐	Is the drain for the RPZ Relief Port adequately sized to accommodate a full discharge (dump) from the relief port without flooding the surrounding area.

7. Pleased indicate to where does the RPZ Relief Port discharge (Drain)?

- ☐ Sanitary Sewer Lateral
- ☐ Storm Sewer Lateral
- ☒ Outside Grade
- ☐ Private Septic System
- ☐ Other _____

8. What is the water pressure (psi) at the facility upstream and downstream of the proposed backflow prevention device(s) both domestic and fire during maximum flow conditions.

Domestic RPZ ☐NA (Check if Domestic Service has been determined to be non-hazardous)

63 Upstream (PSI) Make & Model No. of Proposed RPZ WATTS #909QT-S

53 Downstream (PSI) Size of Backflow Preventer 1 IN

Maximum Domestic Demand (GPM) = 15

Fire Service RPZ ☒NA (Check if there is no Fire Service or if the Fire Service has been determined to be non-hazardous

____ Upstream (PSI) Make & Model No. of Proposed RPZ _____

____ Downstream (PSI) Size of Backflow Preventer _____

Maximum Fire Flow Demand (GPM) = ___

9. Date of Completion of this report 10/29/2

Use Box Below for Engineer's Stamp and Signature

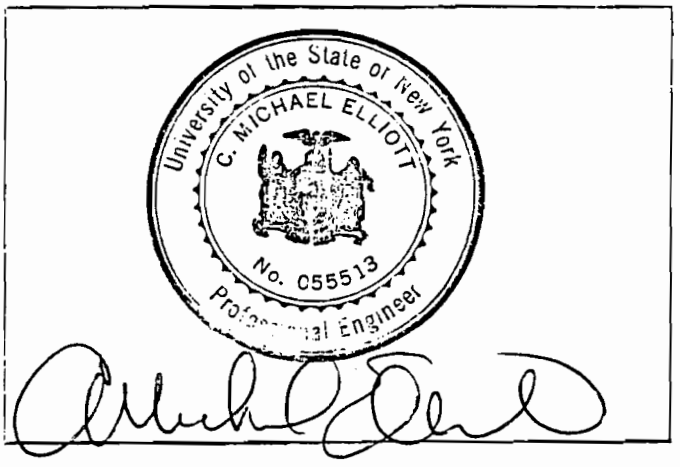

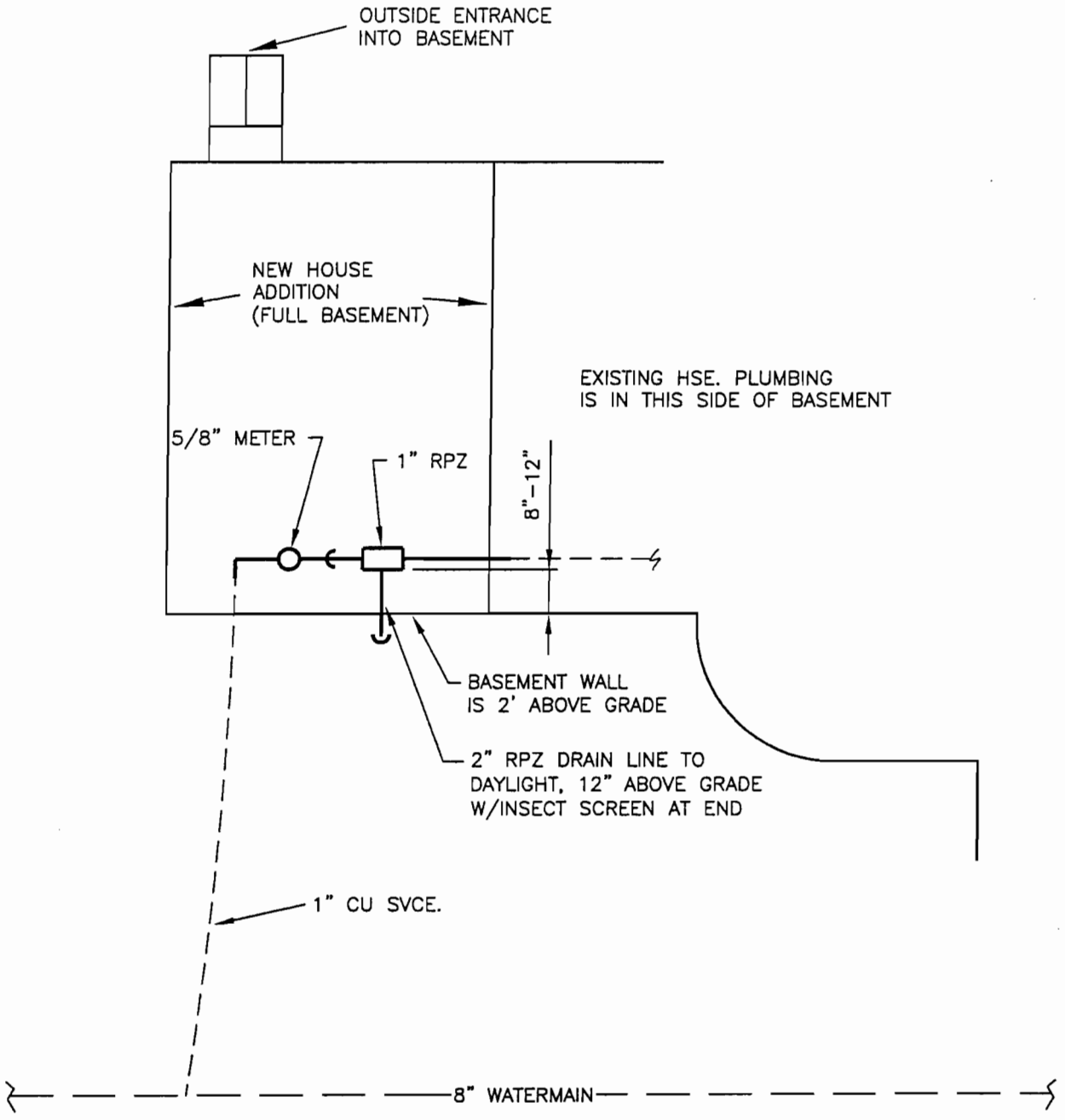

University of the State of New York
C. MICHAEL ELLIOTT
No. 055513
Professional Engineer

PLAN VIEW

NOT TO SCALE

Stearns & Wheler, LLC
Environmental Engineers and Scientists

CAZENOVIA, NEW YORK

DATE:11/02 JOB No.:10209.50

BACKFLOW PREVENTER INSTALLATION
LEHIGH VALLEY RR DERAILMENT SITE
MONROE COUNTY WATER AUTHORITY

HOUSE NO. 75 LIMEROCK ROAD
PLAN VIEW

02/11 CAZ RC
M:\10209\FIGURE\10209F02.DWG

11/02 CAZ RC
M:\10209\FIGURE\10209F06.DWG

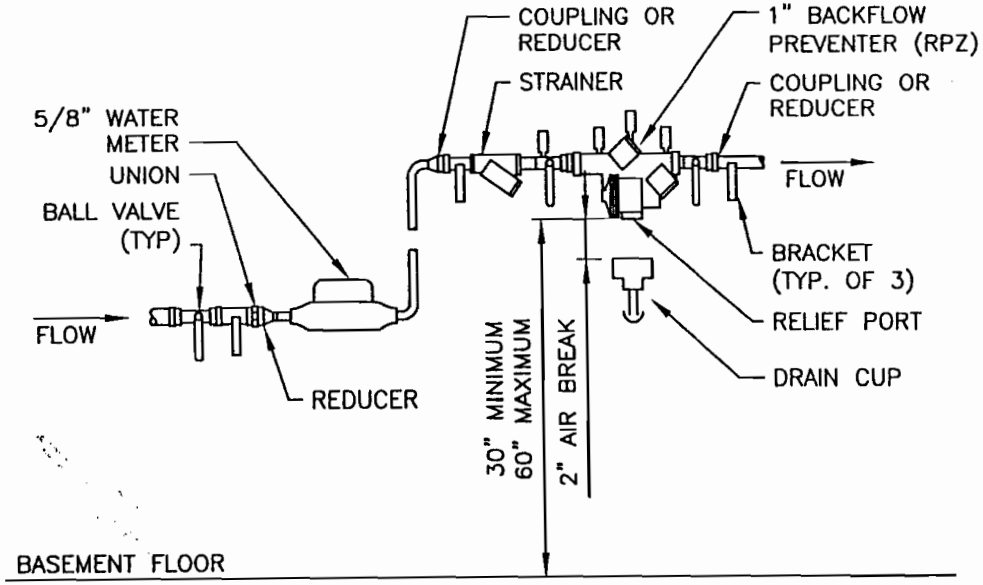

NOTE: SEE SIDE ELEVATION VIEW FOR VERTICAL/HORIZONTAL CLEARANCES.

RPZ = REDUCED PRESSURE ZONE

FRONT ELEVATION VIEW

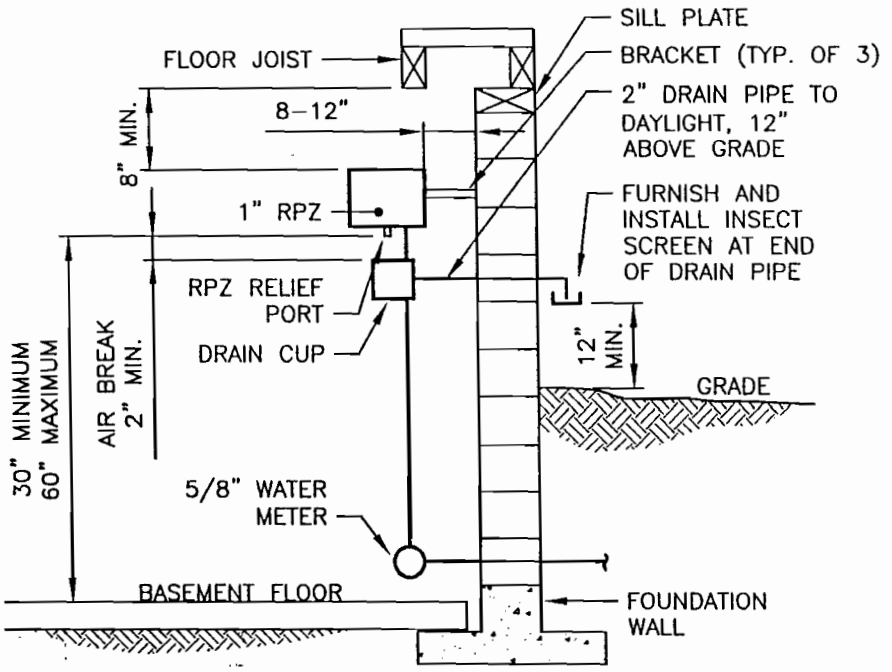

SIDE ELEVATION VIEW

WATER METER AND BACKFLOW PREVENTER

NOT TO SCALE

1. ANGLE BRACKETS SHALL BE MOUNTED TO WALL AND PIPE SECURED WITH U-BOLTS.
2. BACKFLOW PREVENTER SHALL BE 8" TO 12" OFF FACE OF WALL.

Stearns & Wheler, LLC
Environmental Engineers and Scientists
CAZENOVIA, NEW YORK

DATE: 11/02 JOB No.:10290.50

BACKFLOW PREVENTER INSTALLATION
LEHIGH VALLEY RR DERAILMENT SITE
MCWA / LCWSA

HOUSE NO.75 LIMEROCK ROAD
WATER METER AND BACKFLOW PREVENTER
ELEVATION VIEW

# of Backflow Prevention Device

☑ For the year 2003
☑ Initial test - *Complete entire form*
☐ Annual test - *Complete Part A only*

PART A Please use a separate form for each device.

blic Water Supply	Account No.	County	Block	Lot
Monroe County Wat. Auth.		Genesee		

Facility Name Jean Bennett
Address 139 Lime Rock Rd Lk Ry N.Y. 14482 (street / city / zip)
Location of Device South Wall of Basement

Device Information	Manufacturer	Type	Model	Size (In inches)	Serial Number
	Febco	☑ RPZ ☐ DCV	860	1½	H01477

	Check Valve No. 1	Check Valve No. 2	Differential Pressure Relief Valve	Line Pressure 45 psi
Test before repair	Leaked ☐ Closed tight ☑	Leaked ☐ Closed tight ☑	Opened at 4 psid	Date 03 28 03 (m d y)
	Pressure drop across first check valve 8 psid			
Describe repairs and materials used				Repaired by Name ____ Lic # ____ Date repaired ____ (m d y)
Final test	Closed tight ☐	Closed tight ☐	Opened at ____ psid	Date ____ (m d y)
	Pressure drop across first check valve ____ psid			

Water Meter Number	Meter Reading	Type of Service: (check one)
77180149	0010320	☑ Domestic ☐ Fire ☐ Other ____

Remarks (Describe deficiencies: bypasses, outlets before the device, connections between the device and point of entry, missing or inadequate airgap, etc.)

Certification: This device ☑ meets, ☐ does NOT meet, the requirements of an acceptable containment device at the time of testing
I hereby certify the foregoing data to be correct.

Print Name	Certified Tester No.	Signature	Expiration Date
Carl Fisher	02612	Carl Fisher	10/31/03

Property owner's (or owner's agent) certification that test was performed:

Print Name	Title	Signature	Telephone
Jean Bennett	Homeowner	Jean Bennett	585 538 9625

PART B Certification that installation is in accordance with the approved plans. (To be completed by the design engineer or architect or water supplier.)

I hereby certify that this installation is in accordance with the approved plans.

Name	Title	Date	NYS DOH Log #
Michael Elliott	Director, Waterworks	04 21 03 (m d y)	
License Number 55513	Phone (315) 655-8161		
Representing Stearns & Wheler, LLC			
Address One Remington Park Drive			
City Cazenovia	State NY	Zip 13035	
Signature			

Describe minor installation changes

NOTE: Send one completed copy to the designated health department representative and one copy to the water supplier within 30 days of testing the device.
DOH-1013 (9/91) **Notify owner and water supplier immediately if device fails test and repairs cannot immediately be made.**

MONROE COUNTY

Department of Health

John D. Doyle
County Executive

Andrew S. Doniger, M.D., M.P.H.
Director

January 13, 2003

Jean Bennett
139 Lime Rock Road
LeRoy, New York 1482

RE: Approval of plans for the installation
of backflow prevention device(s)
Bennett/Robert's Residence @ 139 Lime Rock Road, Wheatland (T)

Dear Jean:

The plans and specifications for the above project have been reviewed and approved by this Department pursuant to Part 5, Subpart 5-1.31 of the New York State Sanitary Code.

A Certificate of Approval is attached. Also attached is a DOH-1013 form, New York State Department of Health Report on testing and maintenance of Backflow Prevention Devices, which consists of two parts: (A) a place to document the initial test of the device by a New York State Department of Health certified backflow prevention device tester; and (B) a certification by the design engineer or architect that the installation is in accordance with approved plans. Parts A and B must be completed by the certified device tester and the design engineer or architect and returned to this office within 45 days of installation.

Upon receipt of a properly completed DOH-1013 form, the Department of Health will issue a Completed Works Approval. The issuing of the Completed Works Approval finalized the department of Health's backflow plan review process.

If you have any questions, please call me at 274-8079.

Very truly yours,

Lewis LoQuasto
Public Health Sanitarian

Xc: MCWA- Tom Stein
Stearns & Wheler, LLC
File

printed on recycled paper

NEW YORK STATE DEPARTMENT OF HEALTH
CERTIFICATE OF APPROVAL
FOR BACKFLOW PREVENTION DEVICE(S)

This approval is issued under the provisions of 10 NYCRR, Part 5, Subpart 5-1.31:

Facility: Bennett/Robert's Residence	City, Village, Town: 139 Lime Rock Road Wheatland (T)	County: Monroe
Owner's Mailing Address: Jean Bennett 139 Lime Rock Road LeRoy, New York 14482		
Physical Location of Backflow Prevention Device(s): Within heated enclosure South side of house		
Description of Device(s): One (1), Watts 909 (1-1/2") reduced pressure principal (zone) assembly		
Supplier of Water Monroe County Water Authority Tom Stein		
Mailing Address 475 Norris Drive Rochester, New York 14610		

Conditions of approval:

A. THAT within 45 days of installation, the attached certification, DOH 1013 Form, will be completed and returned to the water supplier and the Monroe County Department of Health, Bureau of Public Health Engineering, P.O. Box 92832, 111 Westfall Road, Rochester, New York 14692-8932.

B. THAT a certified backflow prevention device tester test the above backflow prevention device(s) at least yearly and report the results to the water purveyor indicated above and the Monroe County Department of Health at the address listed in condition A.

C. THAT any connection made prior to the backflow prevention device(s) shall render this approval void.

D. THAT the proposed works be constructed in conformance with the plans and specifications approved this day and any amendments thereto.

E. THAT this Certificate of Approval is granted with the understanding that the approved plans are subject to review and re-approval after two years from the date of approval, if installation is not completed by that time.

ISSUED FOR THE STATE
COMMISSIONER OF HEALTH BY:

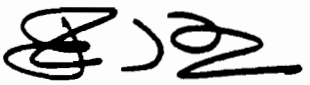

John J. Frazer, P.E.
Senior Public Health Engineer

Date: 01/13/03
DOH 1023 (4/85)
Monroe County Version (2/99)

NEW YORK STATE DEPARTMENT OF HEALTH
Bureau of Public Water Supply Protection 194212

Application For Approval of Backflow Prevention Devices

PRINT OR TYPE ALL ENTRIES EXCEPT SIGNATURES
Please complete items 1 through 12a + Block and Lot Numbers

Block #	Lot #	FOR DEPARTMENT USE ONLY Log No.

1. Name of Facility: HOUSE #139
2. City, Village, Town: TOWN
3. County: ~~GENESEE~~ Monroe
4. Location of Facility — street: 139 LIME ROCK ROAD; city: LeROY; state: NY; zip: 14482
4a. Phone Numbers: 585-538-9625
Contact Person: JEAN BENET
5. Approx. Location of Device(s): within heated enclosure on west of house; SOUTH SIDE OF HOUSE
6. Mfg. Model #: WATTS 909M1QT-S
Size of Device(s): 1 1/2"

# of Fire Services	# of Domestic Services	# of Combined Services	Total # of Services	Total # of Buildings
0	1	0	1	1

7. Name of Owner: JEAN BENET
Title:
Phone Number: 585-538-9625
Full Mailing Address — street: 139 LIME ROCK ROAD; city: LeROY; state: NY; zip: 14482
Owner's Signature: Jean Benet Date (m d y): 10 24 02

8. Nature of works
- [X] Initial Device Installation
- [ ] Replace Existing Device

8a.
- [ ] New Service
- [X] Existing Service

8b.
- [ ] New Building
- [X] Existing Building
- [ ] Major Renovation

9. Name of Design Engineer or Architect: STEARNS & WHEELER, LLC
Address — street: ONE REMINGTON PARK DRIVE; city: CAZENOVIA, NY; state: NY; zip: 13035

10. NYS License #: 055513
- [X] PE [ ] RA [ ] Other

10a. Telephone Number(s): 315-655-8161

University of the State of New York — C. MICHAEL ELLIOTT — No. 055513 — Professional Engineer

Signature

Date (m d y): 10 29 02

Original ink signature and seal required on all copies.

11. Water System Pressure (psi) at Point of Connection: Max 65 Avg 58 Min 50
12. Estimate Installation Cost: $3000
12a. Estimate Design Cost: $ 2000

13. Degree of Hazard
- [X] Hazardous
- [ ] Aesthetically Objectionable

List of processes or reasons that lead to degree of hazard checked: Contaminated / Potentially Contaminated existing well on site

14. Public water supply name: Monroe County Water Authority
Name of supplier's designated representative: Thomas K. Stein
Mailing address — street: 475 Norris Drive; city: Rochester; state: NY; zip: 14610
Title: Construction Engineer
Telephone No. (585) 442-2000
Signature*: Thomas K. Stein Date (m d y): 12/23/02
* Your signature endorses proposal

Note: All applications must be accompanied by plans, specifications and an engineer's report describing the project in detail. The project must first be submitted to the water supplier, who will forward it to the local public health engineer. This form must be prepar in quadruplicate with four copies of all plans, specifications and descriptive literature.

DOH-347 (5/91)

Application for Approval of Backflow Prevention Device For Monroe County Water Authority

Jean Bennett

Water Distribution System
Lehigh Valley Railroad Derailment Site
New York State
Department of Environmental Conservation

Stearns & Wheler, LLC
File No. 10209
November 2002

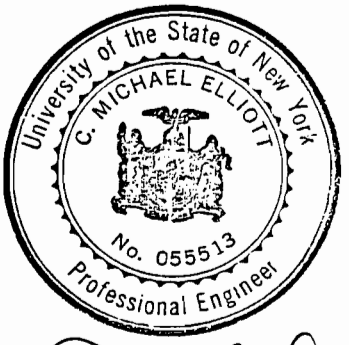

Table of Contents

Engineering Report
Site and Building Plan
Backflow Preventer Installation
Department of Health Form 347

ENGINEER'S REPORT

OWNER

NAME: Jean Bennett

ADDRESS: 139 Lime Rock Road
LeRoy, NY 14482

CONTACT PERSON: Jean Bennett

TELEPHONE: 585-538-9625

SITE PLAN ENGINEER (PREPARES SITE PLAN)

NAME: Stearns & Wheler, LLC

ADDRESS: One Remington Park Drive
Cazenovia, NY 13035

CONTACT PERSON: Titus J. Falkenburg, P.E.

TELEPHONE: 315-655-8161

MECHANICAL ENGINEER (PREPARES INSIDE PLUMBING)

NAME: Stearns & Wheler, LLC

ADDRESS: One Remington Park Drive
Cazenovia, NY 13035

CONTACT PERSON: Titus J. Falkenburg, P.E.

TELEPHONE: 315-655-8161

CONTRACTOR:

NAME: Milherst Construction, Inc.

ADDRESS: P.O. BOX 631 2601 Millersport Highway
Getzville, NY 14068-0631

CONTACT PERSON: Charles Kubiniec

TELEPHONE: 716-688-9098

ENGINEER'S REPORT

FOR APPROVAL OF REDUCED PRESSURE ZONE BACKFLOW PREVENTER

Please complete this report and include it in your Final Design for Backflow approval.

Please answer either YES or NO to questions 1 - 6 Below.

	Y	N	
1.	☐	☒	Does the Facility require a continuous water supply? (If YES dual Backflow Preventers will be required)
2.	☐	☒	Is the Facility located within the 100-year flood plain? (A Reduced Pressure Zone (RPZ) Backflow prevention device must be installed 12-inches above the 100-year flood plain)
3.	☒	☐	Will the area where the Backflow Preventer is located, be adequately heated to prevent freezing?
4.	☒	☐	Will the area where the backflow Preventer is located, be adequately lighted to allow for maintenance and testing of the device(s).
5.	☒	☐	Will the Backflow Preventer be located in a vault, basement and/or located below grade where a drain is necessary to accommodate the relief port? (If Yes, Please answer Questions 5A).
5A.	☐	☒	Will the RPZ Drain to a crock or other holding container which will require pumping to final discharge? If Yes, Please describe:____ _____
6.	☒	☐	Is the drain for the RPZ Relief Port adequately sized to accommodate a full discharge (dump) from the relief port without flooding the surrounding area.

7. Pleased indicate to where does the RPZ Relief Port discharge (Drain)?

- ☐ Sanitary Sewer Lateral
- ☐ Storm Sewer Lateral
- ☒ Outside Grade
- ☐ Private Septic System
- ☐ Other _____

8. What is the water pressure (psi) at the facility upstream and downstream of the proposed backflow prevention device(s) both domestic and fire during maximum flow conditions.

Domestic RPZ ☐NA (Check if Domestic Service has been determined to be non-hazardous)

58 Upstream (PSI) Make & Model No. of Proposed RPZ WATTS 909 M1QT-S

48 Downstream (PSI) Size of Backflow Preventer 1-1/2 IN

Maximum Domestic Demand (GPM) = 15

Fire Service RPZ ☒NA (Check if there is no Fire Service or if the Fire Service has been determined to be non-hazardous

____ Upstream (PSI) Make & Model No. of Proposed RPZ _____

____ Downstream (PSI) Size of Backflow Preventer _____

Maximum Fire Flow Demand (GPM) = ____

9. Date of Completion of this report 10/29/2

Use Box Below for Engineer's Stamp and Signature

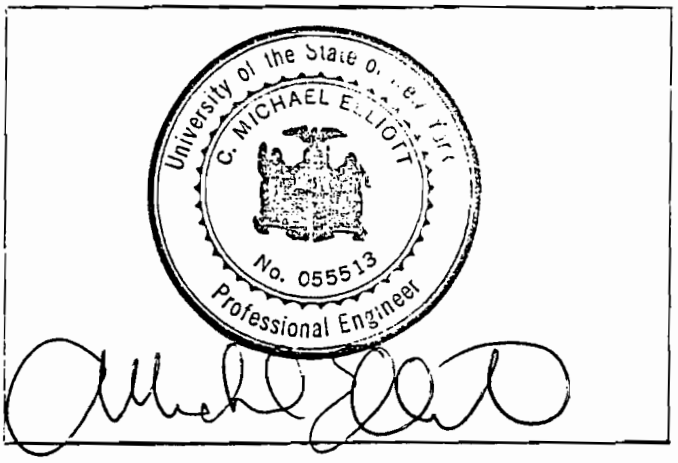

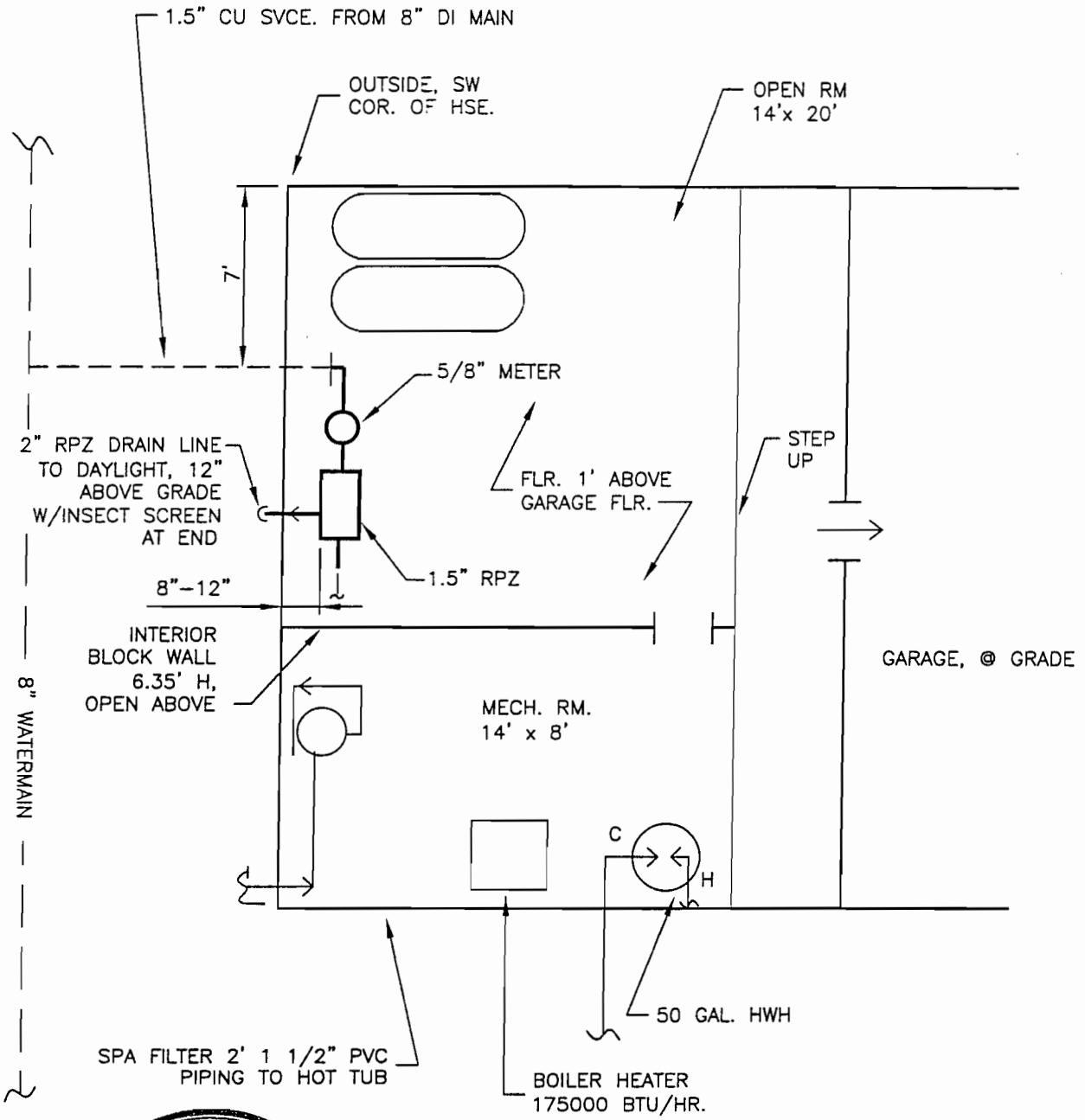

University of the State of New York
C. MICHAEL ELLIOTT
No. 055513
Professional Engineer

PLAN VIEW

NOT TO SCALE

Stearns & Wheler, LLC Environmental Engineers and Scientists CAZENOVIA, NEW YORK DATE:11/02 JOB No.:10209.50	BACKFLOW PREVENTER INSTALLATION LEHIGH VALLEY RR DERAILMENT SITE MONROE COUNTY WATER AUTHORITY HOUSE NO. 139 LIMEROCK ROAD PLAN VIEW

11/02 CAZ RC
M:\10209\FIGURE\10209F01.DWG

11/02 CAZ RC
M:\10209\FIGURE\10209F05.DWG

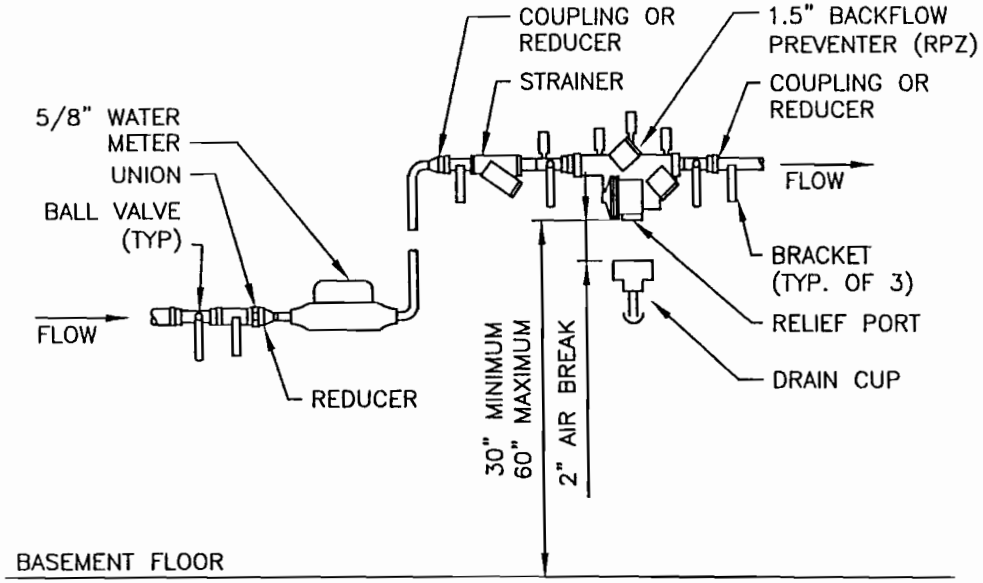

NOTE: SEE SIDE ELEVATION VIEW FOR VERTICAL/HORIZONTAL CLEARANCES.

RPZ = REDUCED PRESSURE ZONE

FRONT ELEVATION VIEW

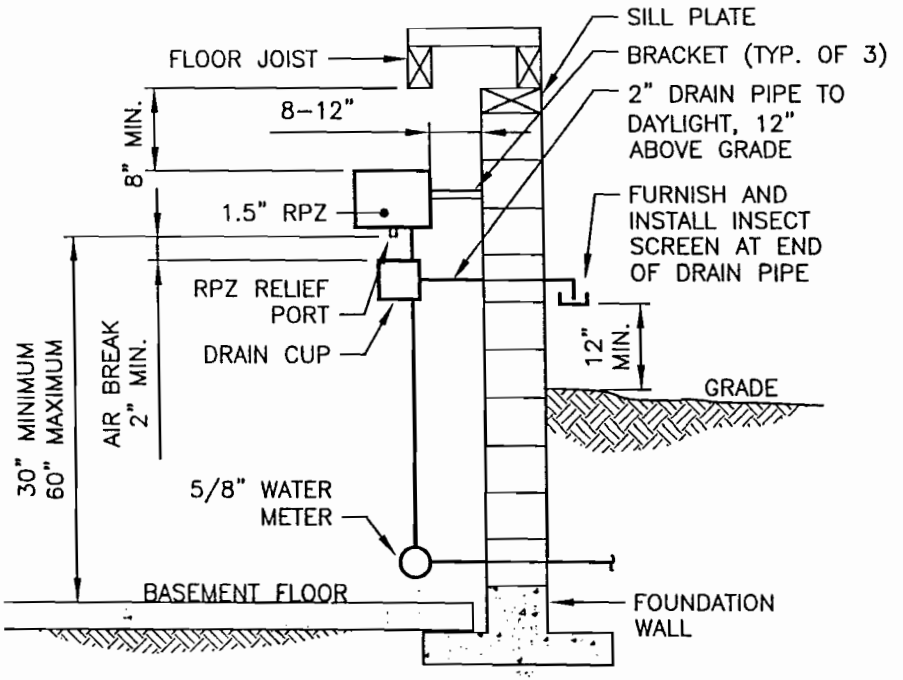

SIDE ELEVATION VIEW

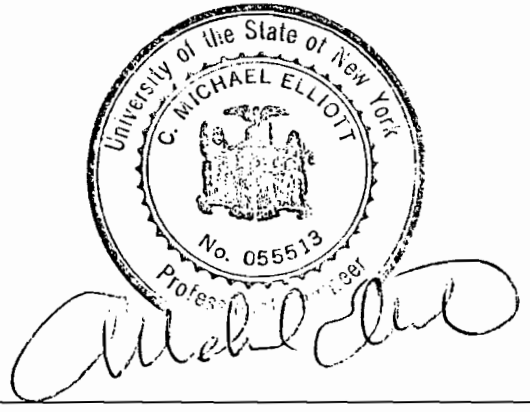

WATER METER AND BACKFLOW PREVENTER

NOT TO SCALE

1. ANGLE BRACKETS SHALL BE MOUNTED TO WALL AND PIPE SECURED WITH U-BOLTS.
2. BACKFLOW PREVENTER SHALL BE 8" TO 12" OFF FACE OF WALL.

Stearns & Wheler, LLC
Environmental Engineers and Scientists
CAZENOVIA, NEW YORK

DATE: 11/02 JOB No.:10290.50

BACKFLOW PREVENTER INSTALLATION
LEHIGH VALLEY RR DERAILMENT SITE
MCWA / LCWSA

HOUSE NO.139 LIMEROCK ROAD
WATER METER AND BACKFLOW PREVENTER
ELEVATION VIEW

Bureau of Public Water Supply Protection

Report on Test and Maintenance of Backflow Prevention Device

☑ For the year 2003
☑ Initial test - *Complete entire form*
☐ Annual test - *Complete Part A only*

PART A Please use a separate form for each device.

Water Supply	Account No.	County	Block	Lot
Monroe County Wat. Auth.		Monroe		

Facility Name: Genesee Country Museum
Address: 1410 Flint Hill Rd (street) Mumford (city) N.Y. (zip)
Location of Device: Ed Center Hot Box in Front of Bldg

Device Information	Manufacturer	Type	Model	Size (in inches)	Serial Number
	Febco	☑ RPZ ☐ DCV	860	2	H05646

Line Pressure 68 psi

	Check Valve No. 1	Check Valve No. 2	Differential Pressure Relief Valve	
Test before repair	Leaked ☐ Closed tight ☑	Leaked ☐ Closed tight ☑	Opened at 3 psid	Date 05/28/03 (m d y)
	Pressure drop across first check valve 6.5 psid			
Describe repairs and materials used				Repaired by Name _____ Lic # _____ Date repaired ☐☐ ☐☐ ☐☐ (m d y)
Final test	Closed tight ☐	Closed tight ☐	Opened at _____ psid	Date ☐☐ ☐☐ ☐☐ (m d y)
	Pressure drop across first check valve _____ psid			

Water Meter Number | Meter Reading | Type of Service: (check one) ☑ Domestic ☐ Fire ☐ Other _____

Remarks (Describe deficiencies: bypasses, outlets before the device, connections between the device and point of entry, missing or inadequate airgap, etc.)

Certification: This device ☑ meets, ☐ does NOT meet, the requirements of an acceptable containment device at the time of testing

I hereby certify the foregoing data to be correct.

Print Name	Certified Tester No.	Signature	Expiration Date
Carl Fisher	02612	Carl Fisher	10/31/03

Property owner's (or owner's agent) certification that test was performed:

Print Name	Title	Signature	Telephone
DENNIS W. ADAMS	SECURITY	Dennis W. Adams	(585) 538-6822

PART B Certification that installation is in accordance with the approved plans. (To be completed by the design engineer or architect or water supplier.)

I hereby certify that this installation is in accordance with the approved plans.

Name	Title	Date (m d y)	NYS DOH Log #
Michael Elliott	Director, waterworks	04/21/03	
License Number 55513	Phone (315) 655-8161		
Representing Stearns & Wheler, LLC			
Address One Remington Park Drive			
City Cazenovia	State NY	Zip 13035	
Signature			

Describe minor installation changes

NOTE: Send one completed copy to the designated health department representative and one copy to the water supplier within 30 days of testing the device.

DOH-1013 (9/91) **Notify owner and water supplier immediately if device fails test and repairs cannot immediately be made.**

Bureau of Public Water Supply Protection

Report on Test and Maintenance of Backflow Prevention Device

For the year 2003

☑ Initial test - *Complete entire form*

☐ Annual test - *Complete Part A only*

PART A Please use a separate form for each device.

Water Supply	Account No.	County	Block	Lot
Monroe County Wat. Auth.		Monroe		

Facility Name Genesee Country Museum

Address 1410 Flint Hill Rd Mumford NY
street city zip

Location of Device Nature Ctr. Bldg. behind house - in Hot box

Device Information	Manufacturer	Type	Model	Size (in inches)	Serial Number
	Febco	☑ RPZ ☐ DCV	860	2	H05683

	Check Valve No. 1	Check Valve No. 2	Differential Pressure Relief Valve	Line Pressure 67 psi
Test before repair	Leaked ☐ Closed tight ☑ Pressure drop across first check valve 7.5 psid	Leaked ☐ Closed tight ☑	Opened at 3.15 psid	Date 03/27/03 m d y
Describe repairs and materials used				Repaired by Name _____ Lic # _____ Date repaired ☐☐ ☐☐ ☐☐ m d y
Final test	Closed tight ☐ Pressure drop across first check valve _____ psid	Closed tight ☐	Opened at _____ psid	Date ☐☐ ☐☐ ☐☐ m d y

Water Meter Number	Meter Reading	Type of Service: (check one)
		☑ Domestic ☐ Fire ☐ Other _____

Remarks (Describe deficiencies: bypasses, outlets before the device, connections between the device and point of entry, missing or inadequate airgap, etc.)

Certification: This device ☑ meets, ☐ does NOT meet, the requirements of an acceptable containment device at the time of testing

I hereby certify the foregoing data to be correct.

Print Name	Certified Tester No.	Signature	Expiration Date
Carl Fisher	02612	Carl Fisher	10/31/03

Property owner's (or owner's agent) certification that test was performed:

Print Name	Title	Signature	Telephone
DENNIS W. ADAMS	SECURITY	Dennis W. Adams	585 538-6822

PART B Certification that installation is in accordance with the approved plans. (To be completed by the design engineer or architect or water supplier.)

I hereby certify that this installation is in accordance with the approved plans.

NYS DOH Log # _____

Name	Title	Date
C. Michael Elliott	Director, Waterworks	04/21/03 m d y
License Number 55513	Phone (315) 655-8161	

Representing Hearns + Wheler, LLC

Address One Remington Park Drive

City Cazenovia State NY Zip 13035

Signature _____

Describe minor installation changes: Heated enclosure/RPZ was moved closer to the Nature Center Bldg.

NOTE: Send one completed copy to the designated health department representative and one copy to the water supplier within 30 days of testing the device.

DOH-1013 (9/91) **Notify owner and water supplier immediately if device fails test and repairs cannot immediately be made.**

Bureau of Public Water Supply Protection

Report on Test and Maintenance of Backflow Prevention Device

For the year 2003

☑ Initial test - *Complete entire form*

☐ Annual test - *Complete Part A only*

PART A Please use a separate form for each device.

Water Supply	Account No.	County	Block	Lot
Monroe County Wat. Auth.		Monroe		

Facility Name: Genesee Country Museum

Address: 1410 Flint Hill Rd Mumford NY (street / city / zip)

Location of Device: East of Depot Rest. in "Hot Box"

Device Information	Manufacturer	Type	Model	Size (in inches)	Serial Number
	Febco	☑ RPZ ☐ DCV	860	4	F0203190 63

	Check Valve No. 1	Check Valve No. 2	Differential Pressure Relief Valve	Line Pressure 68 psi
Test before repair	Leaked ☐ Closed tight ☑	Leaked ☐ Closed tight ☑	Opened at 3.5 psid	Date 03 / 04 / 03 (m d y)
	Pressure drop across first check valve 8 psid			
Describe repair and materials used				Repaired by: Name ____ Lic # ____ Date repaired ____ (m d y)
Final test	Closed tight ☐	Closed tight ☐	Opened at ____ psid	Date ____ (m d y)
	Pressure drop across first check valve ____ psid			

Water Meter Number: | Meter Reading: | Type of Service: (check one) ☑ Domestic ☐ Fire ☐ Other ____

Remarks (Describe deficiencies: bypasses, outlets before the device, connections between the device and point of entry, missing or inadequate airgap, etc.)

Certification: This device ☑ meets, ☐ does NOT meet, the requirements of an acceptable containment device at the time of testing

I hereby certify the foregoing data to be correct.

Print Name	Certified Tester No.	Signature	Expiration Date
Carl Fisher	02612	Carl Fisher	10/31/03

Property owner's (or owner's agent) certification that test was performed:

Print Name	Title	Signature	Telephone
DENNIS W. ADAMS	SECURITY	Dennis W. Adams	(585) 538-6822

PART B Certification that installation is in accordance with the approved plans. (To be completed by the design engineer or architect or water supplier.)

I hereby certify that this installation is in accordance with the approved plans.

NYS DOH Log # ____

Name	Title	Date
C. Michael Elliott	Director, Waterworks	04 / 21 / 03 (m d y)
License Number 55513	Phone (315) 655-8161	
Representing Stearns + Wheler, LLC		
Address One Remington Park Drive		
City Cazenovia	State NY	Zip 13035
Signature		

Describe minor installation changes

NOTE: Send one completed copy to the designated health department representative and one copy to the water supplier within 30 days of testing the device.

DOH-1013 (9/91) **Notify owner and water supplier immediately if device fails test and repairs cannot immediately be made.**

File 70318.5

MONROE COUNTY

Department of Health

Jack Doyle
County Executive

Andrew S. Doniger, M.D., M.P.H.
Director

January 31, 2000

Mr. Mark Minunni
Genesee Country Museum
1410 Flint Hill Road
Mumford,New York 14511-0310

Re: Approval of Plans for the Installation of Backflow Prevention Device(s)
Genesee Country Museum
1410 Flint Hill Road
Wheatland, (T)

Dear Mr. Minunni:

The plans and specifications for the above project have been reviewed and approved by this Department pursuant to Part 5, Subpart 5-1.31 of the New York State Sanitary Code.

A Certificate of Approval is attached. Also attached is a DOH-1013 form, New York State Department of Health Report on Test and Maintenance of Backflow Prevention Device, which consists of two parts: (A) a place to document the initial test of the device by a New York State Department of Health certified backflow prevention device tester; and (B) a Certification by the design engineer or architect that the installation is in accordance with approved plans. Parts A and B must be completed by the certified device tester and the design engineer or architect and returned to this Office within 45 days of installation.

Upon receipt of a properly completed DOH-1013 form, the Department of Health will issue a Completed Works Approval. The issuing of the Completed Works Approval finalizes the Department of Health's backflow plan review process.

If you have any questions, please call me at 274-8079.

Very truly yours,

John A. Felsen
Associate Public Health Sanitarian
JAF/sm

xc: C. Michael Elliott, P.E., Stearns & Wheler,LLC
Paul Springer, MCWA
File

NEW YORK STATE DEPARTMENT OF HEALTH
CERTIFICATE OF APPROVAL
FOR BACKFLOW PREVENTION DEVICES(S)

This approval is issued under the provisions of 10 NYCRR, Part 5, Subpart 5-1.31:

Facility: Genesee Country Museum	City, Village, Town: 1410 Flint Hill Road Wheatland,(T)	County: Monroe
Owner's Mailing Address: Mr. Mark Minunni Genesee Country Museum 1410 Flint Hill Road Mumford, New York 14511-0310		
Physical Location of Backflow Prevention Device(s): In "Hot Box" Enclosures on Water Services to the Education Center,Nature Center and Main Grounds		
Description of Device(s): Three(3) Total/One(1), 4_inch and Two(2),2-inch Watts Model Nos. 909 Reduced Pressure Principle Assembnlies		
Supplier of Water Mr. Paul Springer Monroe County Water Authority		
Mailing Address P. O. Box 10999, 475 Norris Drive, Rochester, New York 14610-0999		

Conditions of approval:

A. THAT within 45 days of installation, the attached certification, DOH 1013 Form, will be completed and returned to the water supplier and the Monroe County Department of Health, Bureau of Public Health Engineering, P.O. Box 92832, 111 Westfall Road, Rochester, New York 14692-8932.

B. THAT a certified backflow prevention device tester test the above backflow prevention device(s) at least yearly and report the results to the water purveyor indicated above and the Monroe County Department of Health at the address listed in condition A.

C. THAT any connection made prior to the backflow prevention device(s) shall render this approval void.

D. THAT the proposed works be constructed in conformance with the plans and specifications approved this day and any amendments thereto.

E. THAT this Certificate of Approval is granted with the understanding that the approved plans are subject to review and re-approval after two years from the date of approval, if installation is not completed by that time.

ISSUED FOR THE STATE
COMMISSIONER OF HEALTH BY:

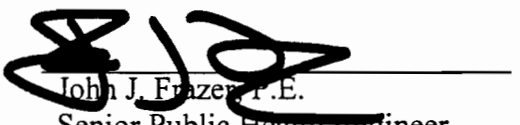

John J. Frazer, P.E.
Senior Public Health Engineer

Date: January 31, 2000

Application for Approval of Backflow Prevention Device for Monroe County Water Authority

Genesee Country Museum

Water Distribution System
Lehigh Valley Railroad Derailment Site
New York State
Department of Environmental Conservation

Stearns & Wheler, LLC
File No.70318KD
October-99

Table of Contents

Engineering Report
Site Plan
Heated Enclosure Detail
Meter Pit Details
MCWA Backflow Inspection Results
Department of Health Form 347

ENGINEER'S REPORT

OWNER

NAME: Genesee Country Museum

ADDRESS: 1410 Flint Hill Road

Mumford, NY 14511-0310

CONTACT PERSON: Mark Minunni

TELEPHONE: (716) 263-9265

SITE PLAN ENGINEER (PREPARES SITE PLAN)

NAME: Stearns & Wheler, LLC

ADDRESS: One Remington Park Drive

Cazenovia, NY 13035

CONTACT PERSON: Titus J. Falkenburg

TELEPHONE: (315) 655-8161

MECHANICAL ENGINEER (PREPARES INSIDE PLUMBING)

NAME: Stearns & Wheler, LLC

ADDRESS: One Remington Park Drive

Cazenovia, NY 13035

CONTACT PERSON: Titus J. Falkenburg

TELEPHONE: (315) 655-8161

CONTRACTOR (IF KNOWN)

NAME: Not Yet Determined

ADDRESS: _____

_____

CONTACT PERSON: _____

TELEPHONE: _____

ENGINEER'S REPORT

FOR APPROVAL OF REDUCED PRESSURE ZONE BACKFLOW PREVENTER

Please complete this report and include it in your Final Design for Backflow approval.

Please answer either YES or NO to questions 1 - 6 Below.

	Y	N	
1.	☐	☒	Does the Facility require a continuous water supply? (If YES dual Backflow Preventers will be required)
2.	☐	☒	Is the Facility located within the 100-year flood plain? (A Reduced Pressure Zone (RPZ) Backflow prevention device must be installed 12-inches above the 100-year flood plain)
3.	☒	☐	Will the area where the Backflow Preventer is located, be adequately heated to prevent freezing?
4.	☒	☐	Will the area where the backflow Preventer is located, be adequately lighted to allow for maintenance and testing of the device(s).
5.	☐	☒	Will the Backflow Preventer be located in a vault, basement and/or located below grade where a drain is necessary to accommodate the relief port? (If Yes, Please answer Questions 5A).
5A.	☐	☐	Will the RPZ Drain to a crock or other holding container which will require pumping to final discharge? If Yes, Please describe:____ _____
6.	☒	☐	Is the drain for the RPZ Relief Port adequately sized to accommodate a full discharge (dump) from the relief port without flooding the surrounding area.

7. Pleased indicate to where does the RPZ Relief Port discharge (Drain)?

- ☐ Sanitary Sewer Lateral
- ☐ Storm Sewer Lateral
- ☒ Outside Grade
- ☐ Private Septic System
- ☐ Other _____

8. What is the water pressure (psi) at the facility upstream and downstream of the proposed backflow prevention device(s) both domestic and fire during maximum flow conditions.

Domestic RPZ ☐NA (Check if Domestic Service has been determined to be non-hazardous)

70 Upstream (PSI) Make & Model No. of Proposed RPZ Watts #909M1QT-S (2") + #909NRS-S-FDA (4"

60 Downstream (PSI) Size of Backflow Preventer 4" and 2"

Maximum Domestic Demand (GPM) = 65 gpm – 4"
50 gpm – 2"
35 gpm – 2"

Fire Service RPZ ☒NA (Check if there is no Fire Service or if the Fire Service has been determined to be non-hazardous

____ Upstream (PSI) Make & Model No. of Proposed RPZ _____

____ Downstream (PSI) Size of Backflow Preventer _____

Maximum Fire Flow Demand (GPM) = ____

9. Date of Completion of this report 9/29/99

Use Box Below for Engineer's Stamp and Signature

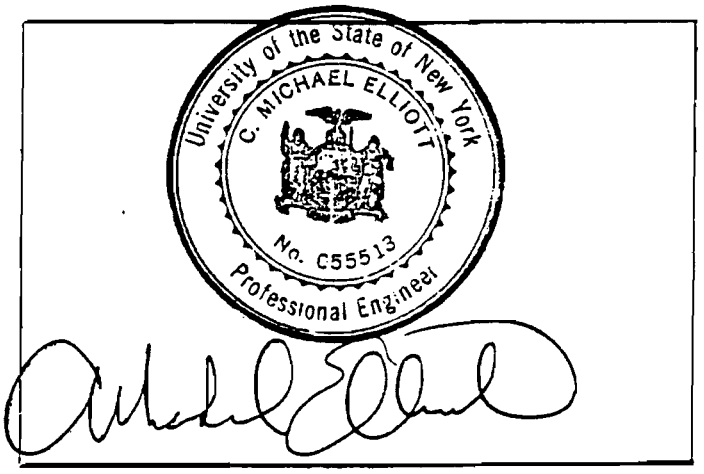

MONROE COUNTY DEPARTMENT OF HEALTH

By direction of the Director of Health these plans are hereby approved pursuant to 10NYCRR5 of the State Sanitary Code. See Drawing Sheet 1, SITE PLAN for date and signature.

99 5 CAZ CMS KMD 7/14/99
\\FS2\DATA\CADUSE\70318KD\FIGURE\70318F27D.DWG

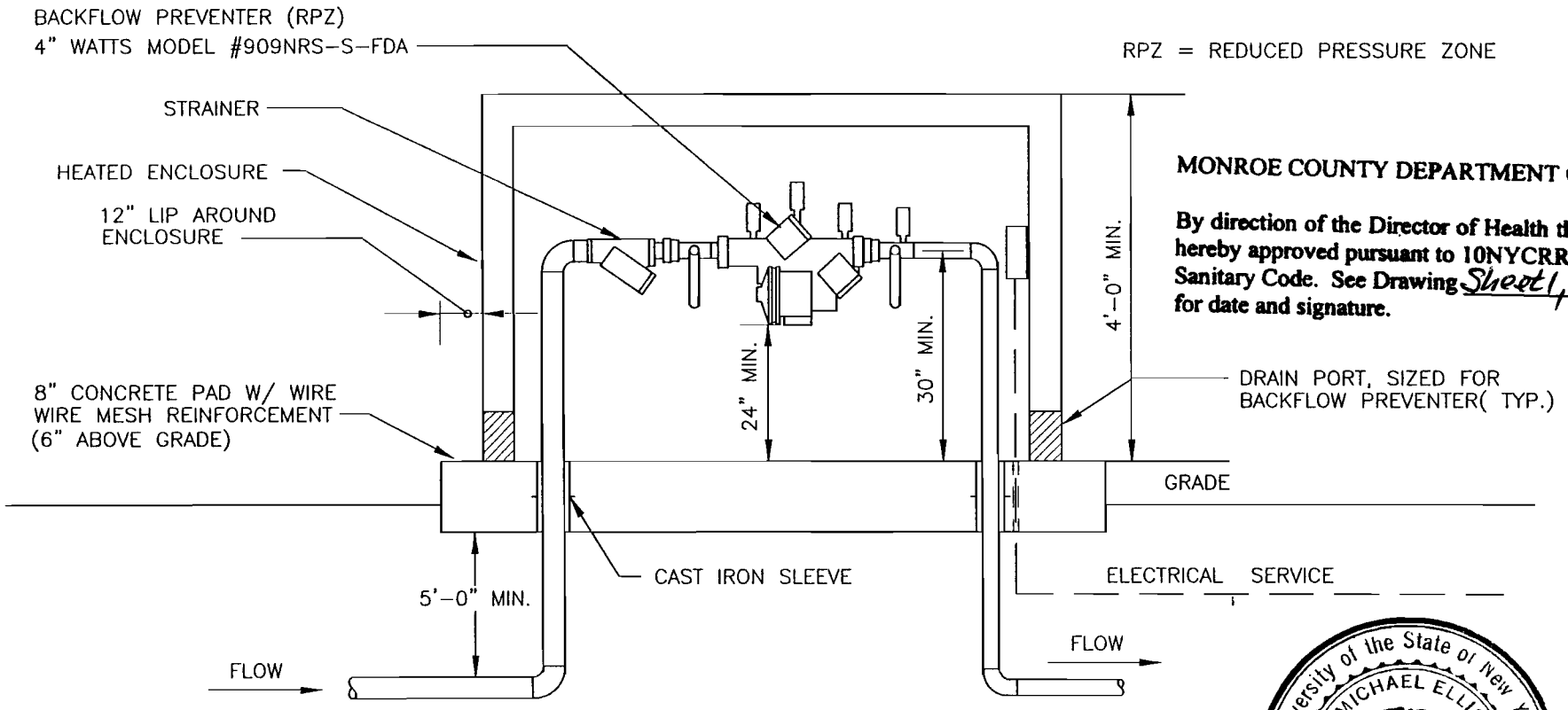

MONROE COUNTY DEPARTMENT OF HEALTH

By direction of the Director of Health these plans are hereby approved pursuant to 10NYCRR5 of the State Sanitary Code. See Drawing Sheet 1, SITE A **for date and signature.**

HEATED ENCLOSURE DETAIL

NOT TO SCALE.

NOTES

1. HEATED ENCLOSURE SHALL BE FIBERGLASS INSULATED BOX WITH HINGED, LOCKABLE LID AND DRAIN PORTS CAPABLE OF HANDLING DISCHARGE FROM RPZ BACKFLOW PREVENTER.
2. ALL PIPING WITHIN ENCLOSURE SHALL BE ADEQUATELY HEATED TO PREVENT FREEZING.
3. ALL SUPPORTS, ANCHORS, BOLTS, ETC. TO BE STAINLESS STEEL.
4. ENCLOSURE AND CONCRETE PAD SHALL BE SIZED ACCORDING TO MANUFACTURER'S RECOMMENDATIONS. ENCLOSURE SHALL BE HOT BOX HB4NS OR EQUAL.
5. SEE ATTACHED PLAN FOR RPZ SIZE AND LOCATION.

University of the State of New York
C. MICHAEL ELLIOTT
No. 055513
Professional Engineer

Stearns & Wheler, LLC
ENVIRONMENTAL ENGINEERS & SCIENTISTS
CAZENOVIA, NEW YORK

DATE: 7/1/99 JOB No.:70318KD

BACKFLOW PREVENTER INSTALLATION
LEHIGH VALLEY RR DERAILMENT SITE
MCWA / LCWSA

4" BACKFLOW PREVENTER
STANDARD HEATED ENCLOSURE DETAIL

99/10 CAZ HCC
\\F52\DATA\CADUSE\70318KD\FIGURE\70318F30D.DWG

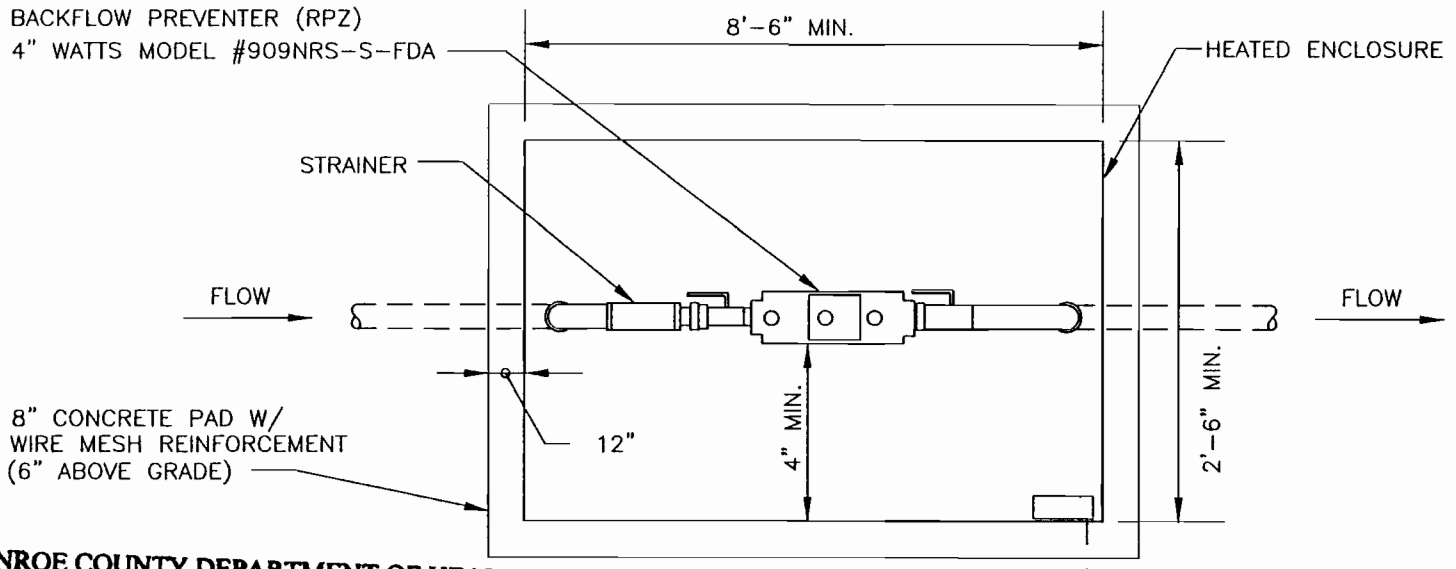

MONROE COUNTY DEPARTMENT OF HEALTH

By direction of the Director of Health these plans are hereby approved pursuant to 10NYCRR5 of the State Sanitary Code. See Drawing Sheet 1, SITE PLAN **for date and signature.**

RPZ = REDUCED PRESSURE ZONE

HEATED ENCLOSURE- PLAN DETAIL

NOT TO SCALE.

NOTES

1. HEATED ENCLOSURE SHALL BE FIBERGLASS INSULATED BOX WITH HINGED, LOCKABLE LID AND DRAIN PORTS CAPABLE OF HANDLING DISCHARGE FROM RPZ BACKFLOW PREVENTER.
2. ALL PIPING WITHIN ENCLOSURE SHALL BE ADEQUATELY HEATED TO PREVENT FREEZING.
3. ALL SUPPORTS, ANCHORS, BOLTS, ETC. TO BE STAINLESS STEEL.
4. ENCLOSURE AND CONCRETE PAD SHALL BE SIZED ACCORDING TO MANUFACTURER'S RECOMMENDATIONS. ENCLOSURE SHALL BE HOT BOX HB4NS OR EQUAL.
5. SEE ATTACHED PLAN FOR RPZ SIZE AND LOCATION.

University of the State of New York
C. MICHAEL ELLIOTT
No. 055513
Professional Engineer

Stearns & Wheler, LLC
ENVIRONMENTAL ENGINEERS & SCIENTISTS
CAZENOVIA, NEW YORK

DATE: 10/99 JOB No.:70318KD

BACKFLOW PREVENTER INSTALLATION
LEHIGH VALLEY RR DERAILMENT SITE
MCWA / LCWSA

4" BACKFLOW PREVENTER
STANDARD HEATED ENCLOSURE DETAIL

99/5 CAZ CMS KMD 7/14/99
\\FS2\DATA\CADUSE\70318KD\FIGURE\70318F27A.DWG

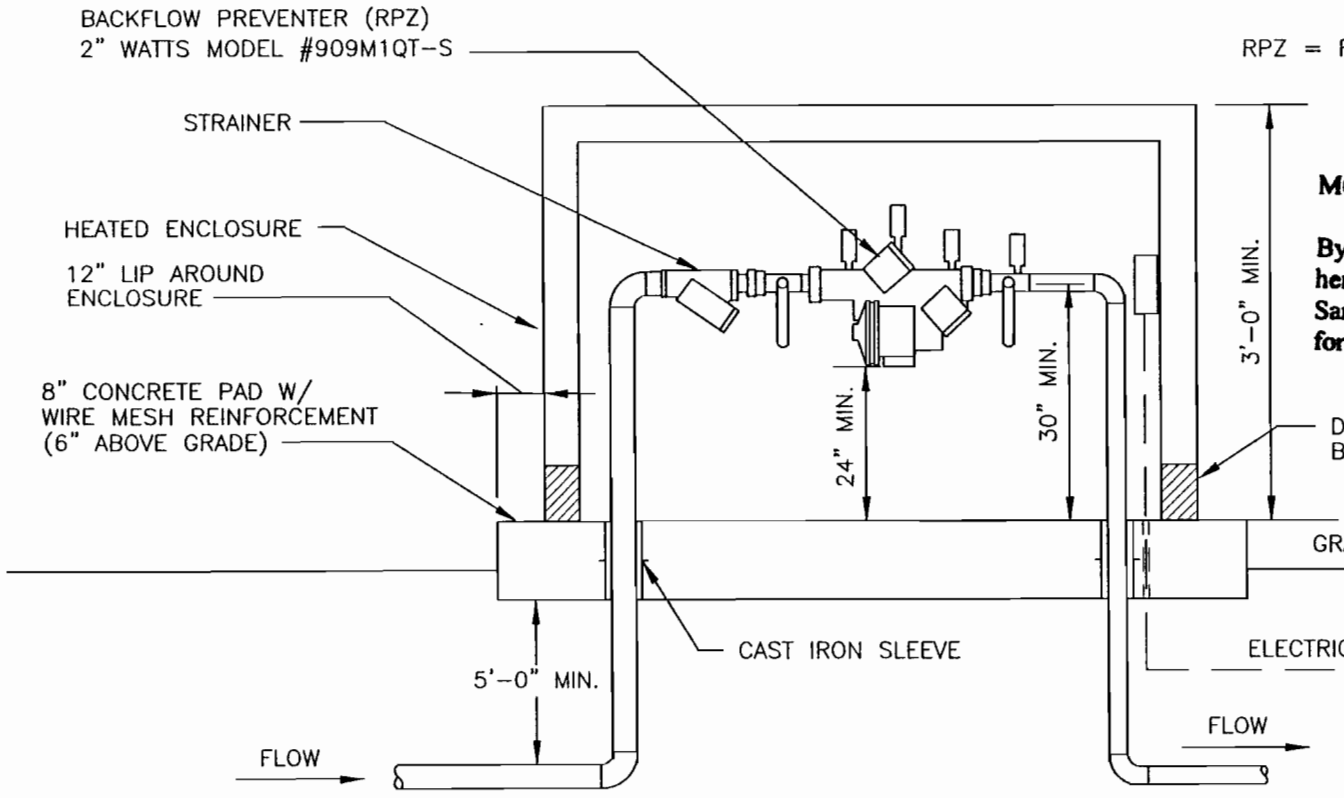

MONROE COUNTY DEPARTMENT OF HEALTH

By direction of the Director of Health these plans are hereby approved pursuant to 10NYCRR5 of the State Sanitary Code. See Drawing Sheet 1, SITE PLAN **for date and signature.**

HEATED ENCLOSURE DETAIL

NOT TO SCALE.

NOTES

1. HEATED ENCLOSURE SHALL BE FIBERGLASS INSULATED BOX WITH HINGED, LOCKABLE LID AND DRAIN PORTS CAPABLE OF HANDLING DISCHARGE FROM RPZ BACKFLOW PREVENTER.
2. ALL PIPING WITHIN ENCLOSURE SHALL BE ADEQUATELY HEATED TO PREVENT FREEZING.
3. ALL SUPPORTS, ANCHORS, BOLTS, ETC. TO BE STAINLESS STEEL.
4. ENCLOSURE AND CONCRETE PAD SHALL BE SIZED ACCORDING TO MANUFACTURER'S RECOMMENDATIONS. ENCLOSURE SHALL BE HOT BOX HB2ST OR EQUAL.
5. SEE ATTACHED PLAN FOR RPZ SIZE AND LOCATION.

University of the State of New York
C. MICHAEL ELLIOTT
No. 055513
Professional Engineer

Stearns & Wheler, LLC
ENVIRONMENTAL ENGINEERS & SCIENTISTS
CAZENOVIA, NEW YORK

DATE: 7/1/99 JOB No.:70318KD

BACKFLOW PREVENTER INSTALLATION
LEHIGH VALLEY RR DERAILMENT SITE
MCWA / LCWSA

2" BACKFLOW PREVENTER
STANDARD HEATED ENCLOSURE DETAIL

99/10 CAZ HCC
\\F52\DATA\CADUSE\70318KD\FIGURE\70318F30A.DWG

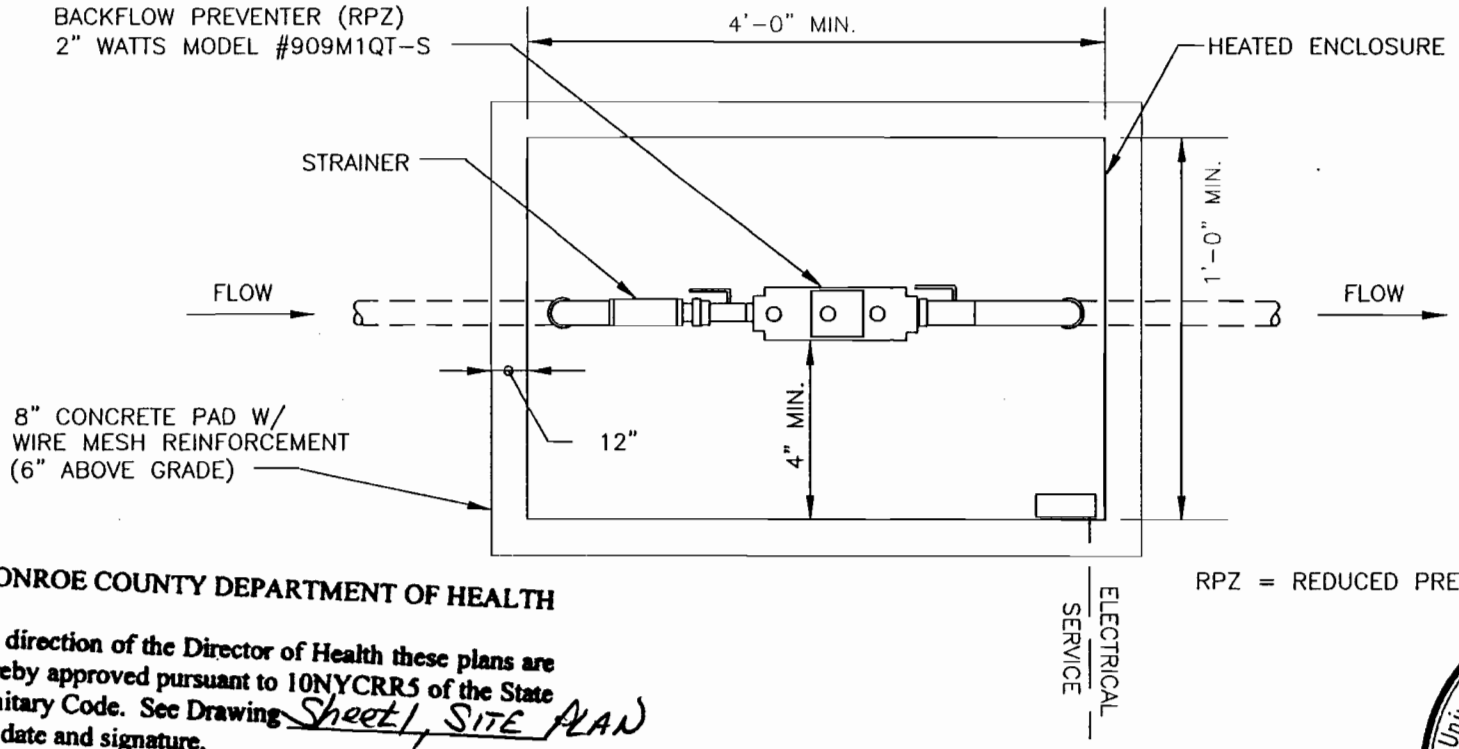

RPZ = REDUCED PRESSURE ZONE

MONROE COUNTY DEPARTMENT OF HEALTH

By direction of the Director of Health these plans are hereby approved pursuant to 10NYCRR5 of the State Sanitary Code. See Drawing Sheet 1, SITE PLAN **for date and signature.**

University of the State of New York
C. MICHAEL ELLIOTT
No. 055513
Professional Engineer

HEATED ENCLOSURE– PLAN DETAIL

NOT TO SCALE.

NOTES

1. HEATED ENCLOSURE SHALL BE FIBERGLASS INSULATED BOX WITH HINGED, LOCKABLE LID AND DRAIN PORTS CAPABLE OF HANDLING DISCHARGE FROM RPZ BACKFLOW PREVENTER.
2. ALL PIPING WITHIN ENCLOSURE SHALL BE ADEQUATELY HEATED TO PREVENT FREEZING.
3. ALL SUPPORTS, ANCHORS, BOLTS, ETC. TO BE STAINLESS STEEL.
4. ENCLOSURE AND CONCRETE PAD SHALL BE SIZED ACCORDING TO MANUFACTURER'S RECOMMENDATIONS. ENCLOSURE SHALL BE HOT BOX HB2ST OR EQUAL.
5. SEE ATTACHED PLAN FOR RPZ SIZE AND LOCATION.

Stearns & Wheler, LLC
ENVIRONMENTAL ENGINEERS & SCIENTISTS
CAZENOVIA, NEW YORK

DATE: 10/99 JOB No.:70318KD

BACKFLOW PREVENTER INSTALLATION
LEHIGH VALLEY RR DERAILMENT SITE
MCWA / LCWSA

2" BACKFLOW PREVENTER
STANDARD HEATED ENCLOSURE DETAIL

HOT BOX®
(800) 736-0238
(904) 786-0204
FAX (904) 783-6965
http://www.hot-box.com
Email: sales@hot-box.com

THE ORIGINAL

HOT BOX®

"THE ENGINEERED ENCLOSURE"™

SUBMITTAL DATA SHEET
BULLETIN NO: 35

Models No.:
HB.75 through HB3E
-Fiberglass-

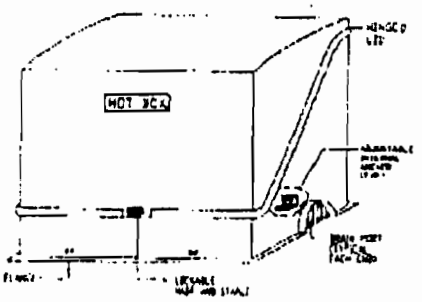

Fiberglass color is Standard Beige. Optional Colors Available at Modest Upcharge.

Models No. HB4N through HB8E
-Aluminum-

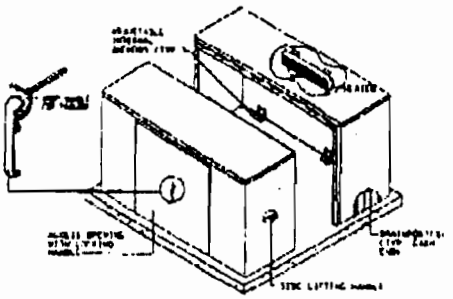

Top View (2 pieces)

Models No: HB4FEM through HB8FEM*
-Fiberglass-
"DESIGNER Series"

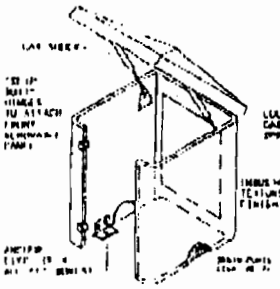

Models No: HB10FE*
-Fiberglass-

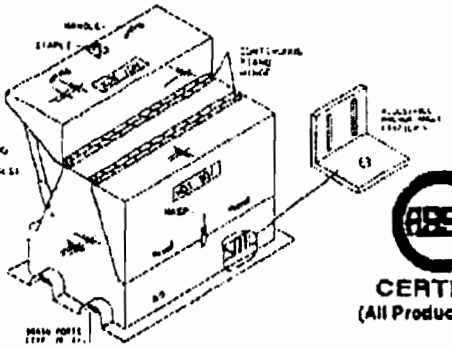

Models No: HB10N through HB10ES and "S" Models 6 & above.
-Aluminum-

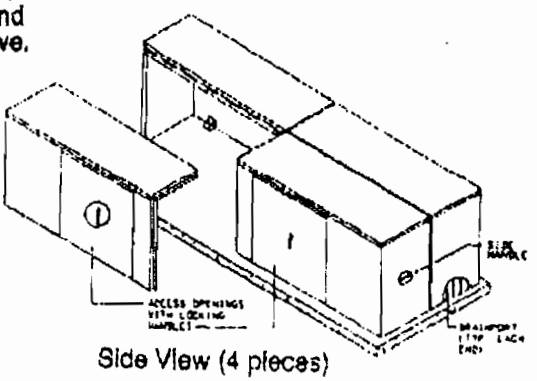

Side View (4 pieces)

CERTIFIED
(All Products Listed)

Patent Pending
* "F" enclosures designed for "N" Pattern Valves.

SPECIFICATION:

Exposure to freezing conditions will result in improper functioning of backflow prevention assemblies, pumps and meters. Devices subjected to potential freezing conditions shall be protected with the Hot Box® insulated enclosure as designed and manufactured by Hot Box® of Jacksonville, Florida.

The enclosure shall be of reinforced aluminum or fiberglass construction, providing access through doors and/or a hinged lid for testing/certification and being totally removable for maintenance purposes. The enclosure shall be structurally lined with a unicellular non-wicking insulation and contain a thermostatically controlled heat source mounted to the interior wall or to the BFP device, for protection to -30° F. No bare wood or "Particle Board" shall be allowed in assembly. Glue applied insulation shall be cause for rejection. Power source will be protected with a ground fault circuit interrupting receptacle, U.L. 943, N.E.M.A. 3R, installed by others, inside the box.

The enclosure shall contain drain openings for "RP" devices sized to accommodate the maximum discharge of the "RP" and to open for discharge under the most severe conditions. These openings are protected against intrusion of either wind, debris or animal. The enclosure is provided with means of permanent anchor and "lockable" access doors and/or lid to prohibit theft or vandalism.

The enclosure shall be certified as meeting the requirements of ASSE 1060 - "Performance Requirements For Outdoor Enclosures".

U.S. PATENT #33,523

PHYSICAL PROPERTIES:

1. Minimum 18 gauge construction.
2. Structural unicellular insulation.
3. Lockable.
4. Relief ports at enclosure grade level.
5. Hot Box® designed to protect to -30° F.
6. Minimum R of 8
7. Unit is a Lok Box™ when supplied without heat.

HOT BOX® FEATURES:

1. Allows for the installation of the BFP device "at the service connection" in accordance with AWWA Standards.
2. Is specifically designed to meet N.F.P.A. guide-lines. The enclosure provides freeze protection to maintain the water supply to a property's fire sprinkler system. (N.F.P.A. 3-3.1.8 & 3-6.1.3.2)
3. Is the logical alternative to "pit installations" (which are seldom recommended by BFP manufacturers, and often are against local code), eliminating "Confined Spaces" hazards.
4. Strategically placed access doors allow for the periodic maintenance encountered, and the systematic testing/certification required by local codes - without removal of the entire unit.
5. Is completely collapsible, removable and replaceable; allowing for major maintenance and/or replacement of backflow prevention equipment without the need for replacement of freeze protection services.
6. Custom enclosures are readily available for most individual applications.

HOT BOX®

"THE ENGINEERED ENCLOSURE"™

Application:

1. Enclosure supplied with "anchor angles" at grade.
   a. Recommended installation: on concrete slab

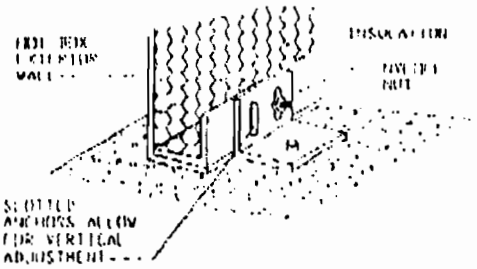

2. N.R.S. (non-rising stem) valve handles enclosed inside enclosure.

3. O S & Y (outside stem and yoke) valve handles and stems concealed inside enclosure roof ("E").

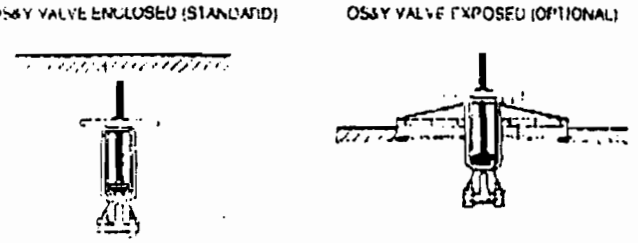

4. O S & Y valve handles and stems can also be exposed outside enclosure ("O") as a custom unit.

STANDARD ENCLOSURE INFORMATION

MODEL NUMBER	PIPE SIZE	INSIDE LENGTH	INSIDE WIDTH	INSIDE HEIGHT	HEATER SIZING (120V, 1Ø)	SHIPPING WEIGHTS	MOUNTING PAD SIZE
				FIBERGLASS			
HB.75	3/4" - 1"	19"	11"	22"	30W CABLE	30#	28 X 20
HB1	3/4" - 1"	27"	13"	23"	60W CABLE	35#	36 X 22
HB1T*	3/4" - 1"	27"	13"	35"	60W CABLE	50#	36 X 22
HB1.5	3/4" - 1-1/2"	33"	21"	24"	60W CABLE	50#	44 X 32
HB2	1-1/4" - 2"	39"	13"	26"	90W CABLE	50#	50 X 24
HB2S	1-1/4" - 2"	47"	13"	26"	90W CABLE	85#	58 x 24
HB2T*	1-1/4" - 2"	39"	13"	36"	90W CABLE	60#	50 X 24
HB2ST	1-1/4" - 2"	47"	13"	36"	90 W CABLE	95#	58 x 24
HB3N	2-1/2" - 3"	70"	26"	45"	1000W HEATER	325#	82 X 38
HB3NS	2-1/2" - 3"	83"	26"	45"	1500W HEATER	340#	95 x 38
HB3E	2-1/2" - 3"	70"	26"	55"	1500W HEATER	385#	82 X 38
HB3ES	2-1/2" - 3"	83"	26"	55"	1500W HEATER	425#	95 x 38
HB4FEM+	2-1/2" - 4"(N)	41"	41"	45"	1000W HEATER	210#	53 x 53
HB6FEM+	6"(N)	47"	47"	49"	1500W HEATER	240#	57 x 57
HB8FEM+	8"(N)	53"	53"	56"	1500W HEATER	300#	63 x 63
HB10FE+	10"(N)	62"	54"	56"	2000W HEATER	490#	74 x 66
				ALUMINUM			
HB4N	4"	90"	32"	50.5"	2000W HEATER	370#	102 X 44
HB4NS	4"	102"	32"	50.5"	2000W HEATER	400#	114 x 44
HB4E	4"	90"	32"	57.5"	2000W HEATER	400#	102 X 44
HB4ES	4"	102"	32"	57.5"	2000W HEATER	450#	114 x 44
HB6N	6"	105"	36"	53"	2000W HEATER	450#	117 X 48
HB6NS	6"	125"	36"	53"	2/1500W HEATERS	475#	137 X 48
HB6E	6"	105"	36"	64"	2/1500W HEATERS	500#	117 X 48
HB6ES	6"	125"	36"	64"	2/1500W HEATERS	525#	137 X 48
HB8N	8"	118"	40"	58"	2/1500W HEATERS	540#	130 X 52
HB8NS	8"	142"	40"	58"	2/1500W HEATERS	550#	154 X 52
HB8E	8"	118"	40"	74"	2/1500W HEATERS	575#	130 X 52
HB8ES	8"	142"	40"	74"	2/2000W HEATERS	610#	154 X 52
HB10N	10"	142"	42"	65"	2/1500W HEATERS	600#	154 X 54
HB10NS	10"	172"	42"	65"	2/2000W HEATERS	675#	184 X 54
HB10E	10"	142"	42"	85"	2/2000W HEATERS	700#	154 X 54
HB10ES	10"	172"	42"	85"	2/2000W HEATERS	775#	184 X 54

"T" = 30" Centerline (C.L.) mounting. "S" = Strataview Enclosure

(N = NRS, O = OS&Y Exposed, E = OS&Y Enclosed, F = Designed for "N" Pattern Valves)

+ "F" = Enclosures designed for "N" Pattern Valves.

+ 4", 6" and 8" are THE MODULAR DESIGNER SERIES (F.E.M) also available as "Flip Top" style (FE).

Custom designed and sized enclosures available - consult factory.

Substitute "LB" above for "HB" when ordering unit without heat.

Heater Notes:

1. 30W through 90W are heating cables, UL listed, CSA certified.
2. 1000W+ are wall mounted air heaters, ETL listed.
3. All circuits are 120 volt, single phase.
4. Service to Hot Boxe must be installed in accordance with the National Electric Code and local ordinances, and protected with a G.F.I.

DISTRIBUTED BY:

LIMITED WARRANTY: Hot Boxe makes every effort to assure that its products meet high quality and durability standards, and warrants to the original retail customer that our product will be free from defects in material and workmanship as follows.

— 1-year limited warranty on all products from date of purchase. Should any trouble develop, return the COMPLETE unit prepaid to the factory after obtaining a return authorization number. If inspection shows it caused by defective workmanship or materials, repair and return will be made without charge. The y will not be responsible for any expenses incurred in installation, removal from service, transportation ..., or for damages of any type whatsoever, including incidental or consequential damages. This warranty does not apply to defects due to misuse, abuse, negligence, accidents, repairs, or alterations outside our facility, or to a lack of maintenance. We shall in no event be liable for death, injuries to persons or property, or for incidental, contingent, special or consequential damages arising from the use of our product. This warranty gives you specific legal rights, and you may also have other rights which vary from state to state. Owner should test heater annually prior to each winter season.

U.S. PATENT #33,573

5,298

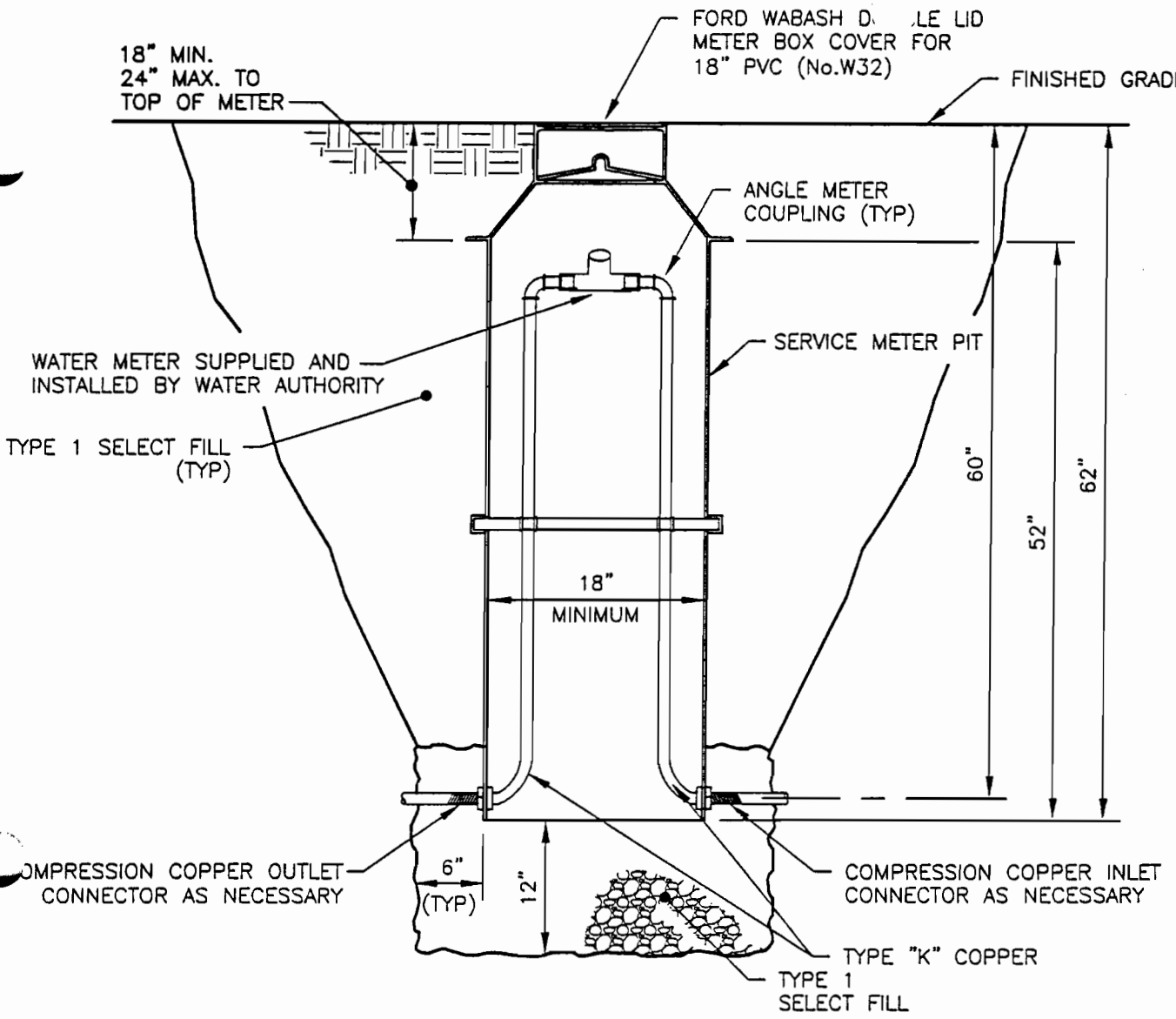

SERVICE METER PIT FOR EXTERIOR METERS

N.T.S.

NOTE:
CONTRACTOR SHALL BE RESPONSIBLE FOR ALL COSTS ASSOCIATED WITH SERVICE METER INSTALLATION, INCLUDING WATER AUTHORITIES FEE FOR SUPPLY AND INSTALLING METER

Stearns & Wheler, LLC
ENVIRONMENTAL ENGINEERS & SCIENTISTS
CAZENOVIA, NEW YORK

DATE:7/2/99 JOB No.: 70318KD

SERVICE METER PIT INSTALLATION
LEHIGH VALLEY RR DERAILMENT SITE
MONROE COUNTY WATER AUTHORITY

SERVICE METER PIT FOR
EXTERIOR METERS

99/5 FSE
N:\CADUSE\70318K
IREV\70318F28.DWG

CROSS CONNECTION CONTROL

SITE INSPECTION REPORT

FACILITY NAME Gallery of Sporting Arch ACCOUNT _____

STREET P.O Box 310 ~~1410~~ 1410 Flint Hill Rd TOWN _____

CITY Mumford NY 14511 PHONE 538-6822

INSPECTED BY P. Woodard DATE 4-16-99

DOMESTIC SERVICE: SIZE — METER S/N —

FIRE SERVICE: SIZE No CLASS N/A PRIVATE HYDRANTS N/A

SIAMESE CONNECTION N/A AUXILIARY SUPPLY Well #1

WATER USAGE fountain, bath rooms, clarivator for water, 500 gal storage tank, slop sink.

HEATING SYSTEM Boiler (oil)

COOLING SYSTEM Chiller (units)

SEWAGE SYSTEM Seat

LAWN IRRIGATION SYSTEM No

DETERMINATION: HAZARDOUS ✓ NON-HAZARDOUS _____

REASONS FOR DETERMINATION

Boiler, chiller unit, complex plumbing

REMARKS

PERSON CONTACTED Keith Bonnlander

ENTERED IN COMPUTER: BY _____ DATE _____

March 1, 1993

Genesee Country Village Museum

CROSS CONNECTION CONTROL

SITE INSPECTION REPORT

GCV Museum

6

FACILITY NAME Education Center ACCOUNT _____

STREET P.O Box 310 1410 Flint Hill Rd TOWN _____

CITY Mumford NY 14511 PHONE 538-6822

INSPECTED BY P. Woodard DATE 4-16-99

DOMESTIC SERVICE: SIZE ✓ METER S/N ✓

FIRE SERVICE: SIZE No CLASS n/a PRIVATE HYDRANTS no

SIAMESE CONNECTION N/A AUXILIARY SUPPLY _____

WATER USAGE Commercial kitchen, Trap primers bathrooms.

HEATING SYSTEM Boilers (oil)

COOLING SYSTEM Chillers

SEWAGE SYSTEM Sept

LAWN IRRIGATION SYSTEM No

DETERMINATION: HAZARDOUS ✓ NON-HAZARDOUS _____

REASONS FOR DETERMINATION

Trap primers, Boilers, Chillers

REMARKS _____

PERSON CONTACTED Keith Bomalander.

ENTERED IN COMPUTER: BY _____ DATE _____

March 1, 1993

CROSS CONNECTION CONTROL

SITE INSPECTION REPORT

GCV Museum

FACILITY NAME Flag Stop Rd ACCOUNT _____

STREET PO Box 310 1410 Flint Hill Rd TOWN _____

CITY Mumford NY 14511 PHONE _____

INSPECTED BY P Woodard DATE _____

DOMESTIC SERVICE: SIZE — METER S/N —

FIRE SERVICE: SIZE N/A CLASS N/A PRIVATE HYDRANTS no

SIAMESE CONNECTION N/A AUXILIARY SUPPLY Well #4

WATER USAGE Static, base bills

HEATING SYSTEM None

COOLING SYSTEM None

SEWAGE SYSTEM None

LAWN IRRIGATION SYSTEM NO

DETERMINATION: HAZARDOUS V NON-HAZARDOUS _____

REASONS FOR DETERMINATION

water lines are shut down (seasonal) and filled with Glycol or Alcohol

REMARKS _____

PERSON CONTACTED _____

ENTERED IN COMPUTER: BY _____ DATE _____

8

CROSS CONNECTION CONTROL

SITE INSPECTION REPORT

GCV Museum

FACILITY NAME Gift Shop ACCOUNT _____

STREET P.O Box 310 TOWN _____

CITY Mumford NY 14511 PHONE 538-6822

INSPECTED BY P. Wondard DATE 4-16-99

DOMESTIC SERVICE: SIZE — METER S/N —

FIRE SERVICE: SIZE No CLASS No PRIVATE HYDRANTS NO

SIAMESE CONNECTION NA AUXILIARY SUPPLY Well #1

WATER USAGE bathrooms, hose bibs

HEATING SYSTEM Boilers (oil)

COOLING SYSTEM Elect

SEWAGE SYSTEM Seat

LAWN IRRIGATION SYSTEM No

DETERMINATION: HAZARDOUS ✓ NON-HAZARDOUS _____

REASONS FOR DETERMINATION Boilers Seasonal Line (supply) for Genesee Jeet & front filled with glyco. (abandoned)

REMARKS Boiler

PERSON CONTACTED Keith Bomnlander

ENTERED IN COMPUTER: BY _____ DATE _____

March 1, 1995

1c

CROSS CONNECTION CONTROL

SITE INSPECTION REPORT

GCV Museum

FACILITY NAME Refreshment Pavilion ACCOUNT _____

STREET P.O Box 210 1410 Flint Hill Rd TOWN _____

CITY Mumford NY 14511 PHONE _____

INSPECTED BY P. Woodard DATE _____

DOMESTIC SERVICE: SIZE — METER S/N —

FIRE SERVICE: SIZE NO CLASS N/A PRIVATE HYDRANTS NO

SIAMESE CONNECTION N/A AUXILIARY SUPPLY Well #5

WATER USAGE Hose bibs, Complex plumbing (fountain) for formal garden, water supply lines to garden

HEATING SYSTEM NO

COOLING SYSTEM NO

SEWAGE SYSTEM Sept

LAWN IRRIGATION SYSTEM NO

DETERMINATION: HAZARDOUS ✓ NON-HAZARDOUS _____

REASONS FOR DETERMINATION

Complex plumbing, lines feeding formal garden uses, Glycol or antifreeze make up water for outside fountain (Tank) (open)

REMARKS _____

PERSON CONTACTED _____

ENTERED IN COMPUTER: BY _____ DATE _____

March 1, 1993

CROSS CONNECTION CONTROL

SITE INSPECTION REPORT

FACILITY NAME GCV Museum Exhibition Hall ACCOUNT _____

STREET _____ TOWN _____

CITY _____, NY _____ PHONE _____

INSPECTED BY _____ DATE _____

DOMESTIC SERVICE: SIZE — METER S/N —

FIRE SERVICE: SIZE xx CLASS n/a PRIVATE HYDRANTS xx

SIAMESE CONNECTION n/a AUXILIARY SUPPLY lobell #

WATER USAGE Hose bibs

HEATING SYSTEM _____

COOLING SYSTEM _____

SEWAGE SYSTEM _____

LAWN IRRIGATION SYSTEM _____

DETERMINATION: HAZARDOUS ✓ NON-HAZARDOUS _____

REASONS FOR DETERMINATION _____

Hose bibs located throughout complex used to fill spray tank (chem)

REMARKS _____

PERSON CONTACTED _____

ENTERED IN COMPUTER: BY _____ DATE _____

March 1, 1993

CROSS CONNECTION CONTROL

SITE INSPECTION REPORT

GCV Museum

FACILITY NAME Restrooms ACCOUNT _____

STREET _____ TOWN _____

CITY _____, NY _____ PHONE _____

INSPECTED BY _____ DATE _____

DOMESTIC SERVICE: SIZE _____ METER S/N _____

FIRE SERVICE: SIZE _____ CLASS _____ PRIVATE HYDRANTS _____

SIAMESE CONNECTION _____ AUXILIARY SUPPLY _____

WATER USAGE Bathrooms

HEATING SYSTEM _____

COOLING SYSTEM _____

SEWAGE SYSTEM _____

LAWN IRRIGATION SYSTEM _____

DETERMINATION: HAZARDOUS ✓ NON-HAZARDOUS _____

REASONS FOR DETERMINATION _____

(Seasonal Feed Lines, filled with Glycol)

REMARKS _____

PERSON CONTACTED _____

ENTERED IN COMPUTER: BY _____ DATE _____

March 1, 1993

13

CROSS CONNECTION CONTROL

SITE INSPECTION REPORT

GCV Museum

FACILITY NAME Nature Center ACCOUNT _____

STREET P.O Box 310 1410 Fort Hill Rd TOWN _____

CITY Mumford, NY 14511 PHONE _____

INSPECTED BY _____ DATE _____

DOMESTIC SERVICE: SIZE — METER S/N —

FIRE SERVICE: SIZE no CLASS n/a PRIVATE HYDRANTS No

SIAMESE CONNECTION n/a AUXILIARY SUPPLY Well #6

WATER USAGE kitchen Chorinator for water, slop sink hose bibs, bathrooms

HEATING SYSTEM Boiler

COOLING SYSTEM no

SEWAGE SYSTEM Sept

LAWN IRRIGATION SYSTEM No

DETERMINATION: HAZARDOUS ✓ NON-HAZARDOUS _____

REASONS FOR DETERMINATION (Boiler)

REMARKS _____

PERSON CONTACTED _____

ENTERED IN COMPUTER: BY _____ DATE _____

Mark 1, 1993

14

CROSS CONNECTION CONTROL

SITE INSPECTION REPORT

GCV Museum

FACILITY NAME At Gale G.H. shop ACCOUNT _____

STREET _____ TOWN _____

CITY _____ NY _____ PHONE _____

INSPECTED BY P. Woodard DATE _____

DOMESTIC SERVICE: SIZE — METER S/N —

FIRE SERVICE: SIZE no CLASS NA PRIVATE HYDRANTS ✓

SIAMESE CONNECTION NA AUXILIARY SUPPLY _____

WATER USAGE Bathroom, kitchen, base bib
Commercial dishwasher, Trap primers,

HEATING SYSTEM Boiler.

COOLING SYSTEM yes (ele)

SEWAGE SYSTEM Sept

LAWN IRRIGATION SYSTEM no

DETERMINATION: HAZARDOUS ✓ NON-HAZARDOUS _____

REASONS FOR DETERMINATION
Glycol in hom. water lines,
Trap primers, Boiler.

REMARKS _____

PERSON CONTACTED _____

ENTERED IN COMPUTER: BY _____ DATE _____

March 1, 1993

15

CROSS CONNECTION CONTROL
SITE INSPECTION REPORT

Genesee Country Museum
P.O. Box 319
1410 Flint Hill Rd
Mumford, NY 14511

FACILITY NAME Ward-Hovey House ACCOUNT _____
STREET Maple Street TOWN _____
CITY _____ NY _____ PHONE 538-6822
INSPECTED BY P. Woodard DATE 4-16-99

DOMESTIC SERVICE: SIZE — METER S/N —
FIRE SERVICE: SIZE n/a CLASS n/a PRIVATE HYDRANTS no
SIAMESE CONNECTION n/a AUXILIARY SUPPLY well
WATER USAGE Bathrooms, Domestic use

HEATING SYSTEM Oil (forced Air)

COOLING SYSTEM no

SEWAGE SYSTEM Sept

LAWN IRRIGATION SYSTEM no

DETERMINATION: HAZARDOUS ✓ NON-HAZARDOUS _____
REASONS FOR DETERMINATION _____

This site made hazardous, because of being on same tax parcel as hazardous site

REMARKS _____

PERSON CONTACTED Keith Boonlander
ENTERED IN COMPUTER: BY _____ DATE _____

March 1, 1995

NEW YORK STATE DEPARTMENT OF HEALTH
Bureau of Public Water Supply Protection

Application For Approval of Backflow Prevention Devices

PRINT OR TYPE ALL ENTRIES EXCEPT SIGNATURES
Please complete items 1 through 12a + Block and Lot Numbers

Block #	Lot #	FOR DEPARTMENT USE ONLY
1	4	Log No.

1. Name of Facility	2. City, Village, Town	3. County
Genesee Country Museum	Town	Monroe

4. Location of Facility (street)	city	state	zip
1410 Flint Hill Road	Wheatland	NY	14511

4a. Phone Numbers	Contact Person
(716) 263-9265	Mark Minnan

5. Approx. Location of Device(s)	6. Mfg. Model #	Size of Device(s)
within heated enclosures around the facility	Watts #909M1QT-S and Watts #909NRS-S-FDA	4", 2", 2"

# of Fire Services	# of Domestic Services	# of Combined Services	Total # of Services	Total # of Buildings
0	3	0	3	10

7. Name of Owner	Title	Phone Number	8. Nature of works
George Collins Genesee Country Museum	Acting President	(716) 538-6822	☒ Initial Device Installation ☐ Replace Existing Device

Full Mailing Address (street): PO Box 310

city	state	zip	8a.	8b.
Mumford	NY	14511	☐ New Service ☒ Existing Service	☐ New Building ☐ Existing Building ☐ Major Renovation

Owner's Signature: George Collins Date: 8 / 10 / 99 (m d y)

9. Name of Design Engineer or Architect	10. NYS License #
Stearns + Wheler, LLC	57573

Address (street): One Remington Park Drive
city: Cazenovia
state: NY zip: 13035

☒ PE ☐ RA ☐ Other

10a. Telephone Number(s): (315) 655-8161

University of the State of New York — C. MICHAEL ELLIOTT — No. C55513 — Professional Engineer

Original ink signature and seal required on all copies.

Signature

Date: 9 / 29 / 99 (m d y)

11. Water System Pressure (psi) at Point of Connection	12. Estimate Installation Cost	12a. Estimate Design Cost
Max 73 Avg 70 Min 60	$30,000	$5,000

13. Degree of Hazard
☒ Hazardous
☐ Aesthetically Objectionable

List of processes or reasons that lead to degree of hazard checked:
Boilers and chillers connected to water supply line

14. Public water supply name	Name of supplier's designated representative
Monroe County Water Authority	Paul Springer

Mailing address (street): 475 Norris Drive
Title: Senior Construction Inspector

city	state	zip
Rochester	NY	14610

Telephone No. (716) 442-2000

Signature*: Paul Springer Date: 1 / 24 / 00 (m d y)
* Your signature endorses proposal

Note: All applications must be accompanied by plans, specifications and an engineer's report describing the project in detail. The project must first be submitted to the water supplier, who will forward it to the local public health engineer. This form must be prepa in quadruplicate with four copies of all plans, specifications and descriptive literature.

W YORK STATE DEPARTMENT OF HEALTH
eau of Public Water Supply Protection

Report on Test and Maintenance of Backflow Prevention Device

For the year 2003
☑ Initial test - *Complete entire form*
☐ Annual test - *Complete Part A only*

PART A Please use a separate form for each device.

blic Water Supply: Monroe County Wat. Auth	Account No.	County: Livingston	Block	Lot

cility Name: Falcon Trap & Game Club
dress: Lime Rock Rd Lakeville N.Y. 14482
street city zip

Location of Device: "Hot Box" in Front Yard

evice ormation	Manufacturer	Type	Model	Size (in inches)	Serial Number
	Febco	☑ RPZ ☐ DCV	860	1½	A03856

	Check Valve No. 1	Check Valve No. 2	Differential Pressure Relief Valve	Line Pressure 63 psi
st fore pair	Leaked ☐ Closed tight ☑ Pressure drop across first check valve 7.5 psid	Leaked ☐ Closed tight ☑	Opened at 4 psid	Date 03 26 03 (m d y)
escribe pairs and aterials sed				Repaired by Name ____ Lic # ____ Date repaired ___ ___ ___ (m d y)
	Closed tight ☐ Pressure drop across first check valve ____ psid	Closed tight ☐	Opened at ____ psid	Date ___ ___ ___ (m d y)

Water Meter Number	Meter Reading	Type of Service: (check one)
77388936	0007340	☑ Domestic ☐ Fire ☐ Other ____

Remarks (Describe deficiencies: bypasses, outlets before the device, connections between the device and point of entry, missing or inadequate airgap, etc.)

Certification: This device ☑ meets, ☐ does NOT meet, the requirements of an acceptable containment device at the time of testing

I hereby certify the foregoing data to be correct.

Print Name	Certified Tester No.	Signature	Expiration Date
Carl Fisher	02612	[signature]	10/31/03

Property owner's (or owner's agent) certification that test was performed:

Print Name	Title	Signature	Telephone
Earl Poles	Charter Member	[signature]	( ) 889-0042

PART B Certification that installation is in accordance with the approved plans. (To be completed by the design engineer or architect or water supplier.)

I hereby certify that this installation is in accordance with the approved plans.

NYS DOH Log # ____

Name: C. Michael Elliott	Title: Director, water works	Date: 06 27 03 (m d y)
License Number: 55513	Phone (315) 655-8161	
Representing: Stearns + Wheler, LLC		Describe minor installation changes
Address: One Remington Park Drive		
City: Cazenovia	State: NY	Zip: 13035
Signature: [signature]		

NOTE: Send one completed copy to the designated health department representative and one copy to the water supplier within 30 days of testing the device.

OH-1013 (9/91) **Notify owner and water supplier immediately if device fails test and repairs cannot immediately be made.**

File 7031B.5

MONROE COUNTY

Department of Health

Jack Doyle
County Executive

Andrew S. Doniger, M.D., M.P.H.
Director

January 31, 2000

Mr. John Campbell
Falcon Trap and Game Club
3714 Latta Road
Rochester, New York 14612

Re: Approval of Plans for the Installation of Backflow Prevention Device(s)
Falcon Trap and Game Club
Limerock Road
Wheatland, (T)

Dear Mr. Campbell:

The plans and specifications for the above project have been reviewed and approved by this Department pursuant to Part 5, Subpart 5-1.31 of the New York State Sanitary Code.

A Certificate of Approval is attached. Also attached is a DOH-1013 form, New York State Department of Health Report on Test and Maintenance of Backflow Prevention Device, which consists of two parts: (A) a place to document the initial test of the device by a New York State Department of Health certified backflow prevention device tester; and (B) a Certification by the design engineer or architect that the installation is in accordance with approved plans. Parts A and B must be completed by the certified device tester and the design engineer or architect and returned to this Office within 45 days of installation.

Upon receipt of a properly completed DOH-1013 form, the Department of Health will issue a Completed Works Approval. The issuing of the Completed Works Approval finalizes the Department of Health's backflow plan review process.

If you have any questions, please call me at 274-8079.

Very truly yours,

John A. Felsen
Associate Public Health Sanitarian
JAF/sm

xc: C. Michael Elliott, P.E., Stearns & Wheler,LLC
Paul Springer, MCWA
File

NEW YORK STATE DEPARTMENT OF HEALTH
CERTIFICATE OF APPROVAL
FOR BACKFLOW PREVENTION DEVICES(S)

This approval is issued under the provisions of 10 NYCRR, Part 5, Subpart 5-1.31:

Facility:	City, Village, Town:	County:
Falcon Trap and Game Club	Limerock Road Wheatland,(T)	Monroe
Owner's Mailing Address: Mr. John Campbell Falcon Trap and Game Club 3714 Latta Road Rochester, New York 14612		
Physical Location of Backflow Prevention Device(s): In "Hot Box" Enclosure Approximately 35 Feet from Edge of Pavement of Limerock Road		
Description of Device(s): One(1),1-1/2-inch Watts Model No. 909 Reduced Pressure Principle Assembly		
Supplier of Water Mr. Paul Springer Monroe County Water Authority		
Mailing Address P.O. Box 10999,475 Norris Drive, Rochester, New York 14610-0999		

Conditions of approval:

A. THAT within 45 days of installation, the attached certification, DOH 1013 Form, will be completed and returned to the water supplier and the Monroe County Department of Health, Bureau of Public Health Engineering, P.O. Box 92832, 111 Westfall Road, Rochester, New York 14692-8932.

B. THAT a certified backflow prevention device tester test the above backflow prevention device(s) at least yearly and report the results to the water purveyor indicated above and the Monroe County Department of Health at the address listed in condition A.

C. THAT any connection made prior to the backflow prevention device(s) shall render this approval void.

D. THAT the proposed works be constructed in conformance with the plans and specifications approved this day and any amendments thereto.

E. THAT this Certificate of Approval is granted with the understanding that the approved plans are subject to review and re-approval after two years from the date of approval, if installation is not completed by that time.

ISSUED FOR THE STATE
COMMISSIONER OF HEALTH BY:

John J. Frazee, P.E.
Senior Public Health Engineer

Date: January 31, 2000
DOH 1023 (4/85)
Monroe County Version (2/99)

Application for Approval of Backflow Prevention Device for Monroe County Water Authority

Falcon Trap and Game Club

Water Distribution System
Lehigh Valley Railroad Derailment Site
New York State
Department of Environmental Conservation

Stearns & Wheler, LLC
File No.70318KD
October-99

Table of Contents

Engineering Report
Site Plan
Heated Enclosure Detail
Meter Pit Detail
MCWA Backflow Inspection Results
Department of Health Form 347

ENGINEER'S REPORT

OWNER

NAME: Falcon Trap & Game Club

ADDRESS: Lime Rock Road

Mumford, NY 14511

CONTACT PERSON: John Campbell

TELEPHONE: (716) 334-5670

SITE PLAN ENGINEER (PREPARES SITE PLAN)

NAME: Stearns & Wheler, LLC

ADDRESS: One Remington Park Drive

Cazenovia, NY 13035

CONTACT PERSON: Titus J. Falkenburg

TELEPHONE: (315) 655-8161

MECHANICAL ENGINEER (PREPARES INSIDE PLUMBING)

NAME: Stearns & Wheler, LLC

ADDRESS: One Remington Park Drive

Cazenovia, NY 13035

CONTACT PERSON: Titus J. Falkenburg

TELEPHONE: (315) 655-8161

CONTRACTOR (IF KNOWN)

NAME: Not Yet Determined

ADDRESS: _____

_____

CONTACT PERSON: _____

TELEPHONE: _____

ENGINEER'S REPORT

FOR APPROVAL OF REDUCED PRESSURE ZONE BACKFLOW PREVENTER

Please complete this report and include it in your Final Design for Backflow approval.

Please answer either YES or NO to questions 1 - 6 Below.

	Y	N	
1.	☐	☒	Does the Facility require a continuous water supply? (If YES dual Backflow Preventers will be required)
2.	☐	☒	Is the Facility located within the 100-year flood plain? (A Reduced Pressure Zone (RPZ) Backflow prevention device must be installed 12-inches above the 100-year flood plain)
3.	☒	☐	Will the area where the Backflow Preventer is located, be adequately heated to prevent freezing?
4.	☒	☐	Will the area where the backflow Preventer is located, be adequately lighted to allow for maintenance and testing of the device(s).
5.	☐	☒	Will the Backflow Preventer be located in a vault, basement and/or located below grade where a drain is necessary to accommodate the relief port? (If Yes, Please answer Questions 5A).
5A.	☐	☐	Will the RPZ Drain to a crock or other holding container which will require pumping to final discharge? If Yes, Please describe:____
6.	☒	☐	Is the drain for the RPZ Relief Port adequately sized to accommodate a full discharge (dump) from the relief port without flooding the surrounding area.

7. Pleased indicate to where does the RPZ Relief Port discharge (Drain)?

- ☐ Sanitary Sewer Lateral
- ☐ Storm Sewer Lateral
- ☒ Outside Grade
- ☐ Private Septic System
- ☐ Other _____

8. What is the water pressure (psi) at the facility upstream and downstream of the proposed backflow prevention device(s) both domestic and fire during maximum flow conditions.

Domestic RPZ ☐NA (Check if Domestic Service has been determined to be non-hazardous)

50 Upstream (PSI) Make & Model No. of Proposed RPZ Watts #909M1QT-S

40 Downstream (PSI) Size of Backflow Preventer 1½"

Maximum Domestic Demand (GPM) = 15

Fire Service RPZ ☒NA (Check if there is no Fire Service or if the Fire Service has been determined to be non-hazardous

____ Upstream (PSI) Make & Model No. of Proposed RPZ _____

____ Downstream (PSI) Size of Backflow Preventer _____

Maximum Fire Flow Demand (GPM) = ____

9. Date of Completion of this report _____

Use Box Below for Engineer's Stamp and Signature

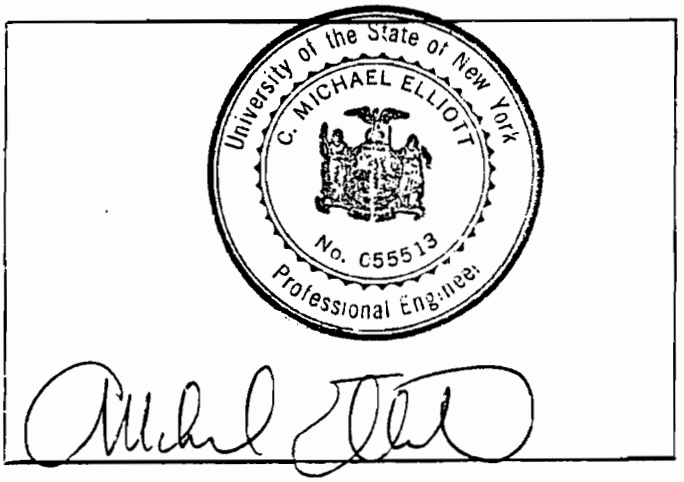

MONROE COUNTY DEPARTMENT OF HEALTH

By direction of the Director of Health these plans are hereby approved pursuant to 10NYCRR5 of the State Sanitary Code. See Drawing HEATED ENCLOSURE DETAIL for date and signature.

70318X01 & 70318X02
99/5 CAZ CMS KMD 7/14/99
\\FS2\DATA\CADUSE\70318KD\FIGURE\70318F18.DWG

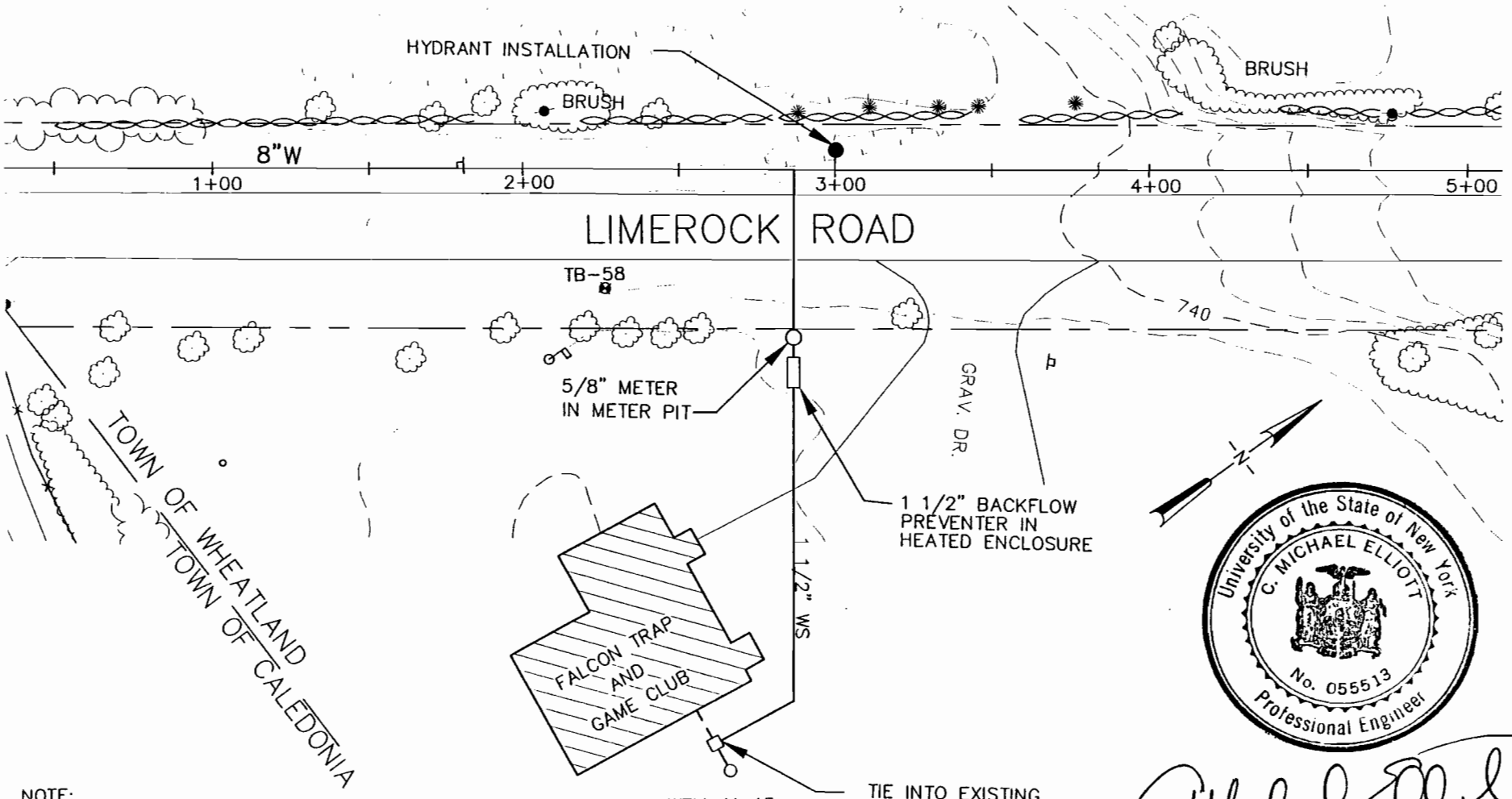

University of the State of New York
C. MICHAEL ELLIOTT
No. 055513
Professional Engineer

NOTE:

1. BACKFLOW PREVENTER SHALL BE A 1 1/2" RPZ WATTS MODEL #909M1QT-S.

SITE PLAN
SCALE: 1"=50'

Stearns & Wheler, LLC
ENVIRONMENTAL ENGINEERS & SCIENTISTS
CAZENOVIA, NEW YORK

DATE: 5/99 JOB No.:70318KD

BACKFLOW PREVENTER INSTALLATION
LEHIGH VALLEY RR DERAILMENT SITE
MONROE COUNTY WATER AUTHORITY

FALCON TRAP AND GAME CLUB
SITE PLAN

99/5 CAZ CMS KMD 7/14/99
\\TS2\DATA\CADUSE\70318KD\FIGURE\70318F27B.DWG

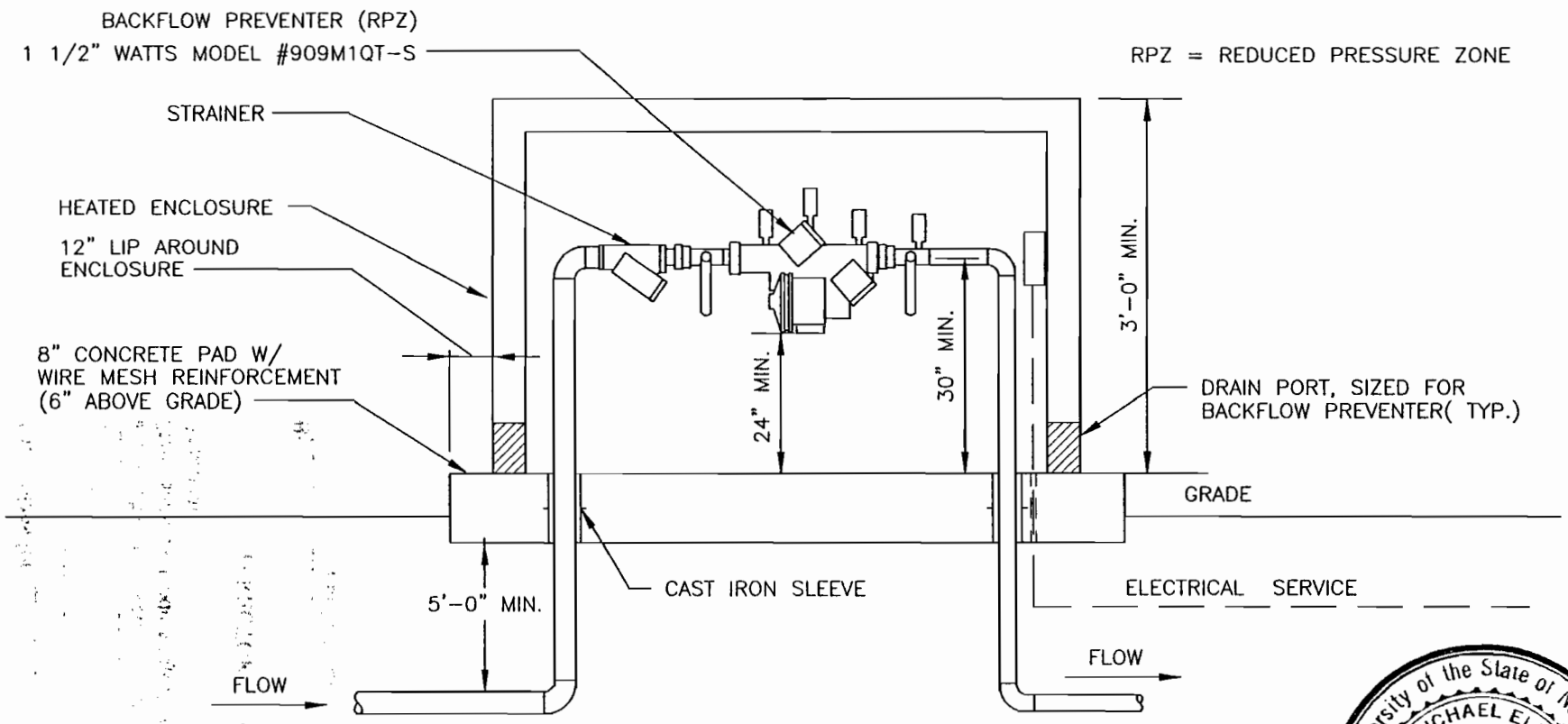

HEATED ENCLOSURE DETAIL

NOT TO SCALE.

NOTES

1. HEATED ENCLOSURE SHALL BE FIBERGLASS INSULATED BOX WITH HINGED, LOCKABLE LID AND DRAIN PORTS CAPABLE OF HANDLING DISCHARGE FROM RPZ BACKFLOW PREVENTER.
2. ALL PIPING WITHIN ENCLOSURE SHALL BE ADEQUATELY HEATED TO PREVENT FREEZING.
3. ALL SUPPORTS, ANCHORS, BOLTS, ETC. TO BE STAINLESS STEEL.
4. ENCLOSURE AND CONCRETE PAD SHALL BE SIZED ACCORDING TO MANUFACTURER'S RECOMMENDATIONS. ENCLOSURE SHALL BE HOT BOX HB2ST OR EQUAL.
5. SEE ATTACHED PLAN FOR RPZ SIZE AND LOCATION.

University of the State of New York
C. MICHAEL ELLIOTT
No. 055513
Professional Engineer

Stearns & Wheler, LLC
ENVIRONMENTAL ENGINEERS & SCIENTISTS
CAZENOVIA, NEW YORK

DATE: 7/1/99 JOB No.:70318KD

BACKFLOW PREVENTER INSTALLATION
LEHIGH VALLEY RR DERAILMENT SITE
MCWA / LCWSA

1 1/2" BACKFLOW PREVENTER
STANDARD HEATED ENCLOSURE DETAIL

99-10 CAZ HCC
\\FS2\DATA\CADUSE\70318KD\FIGURE\70318F30B.DWG

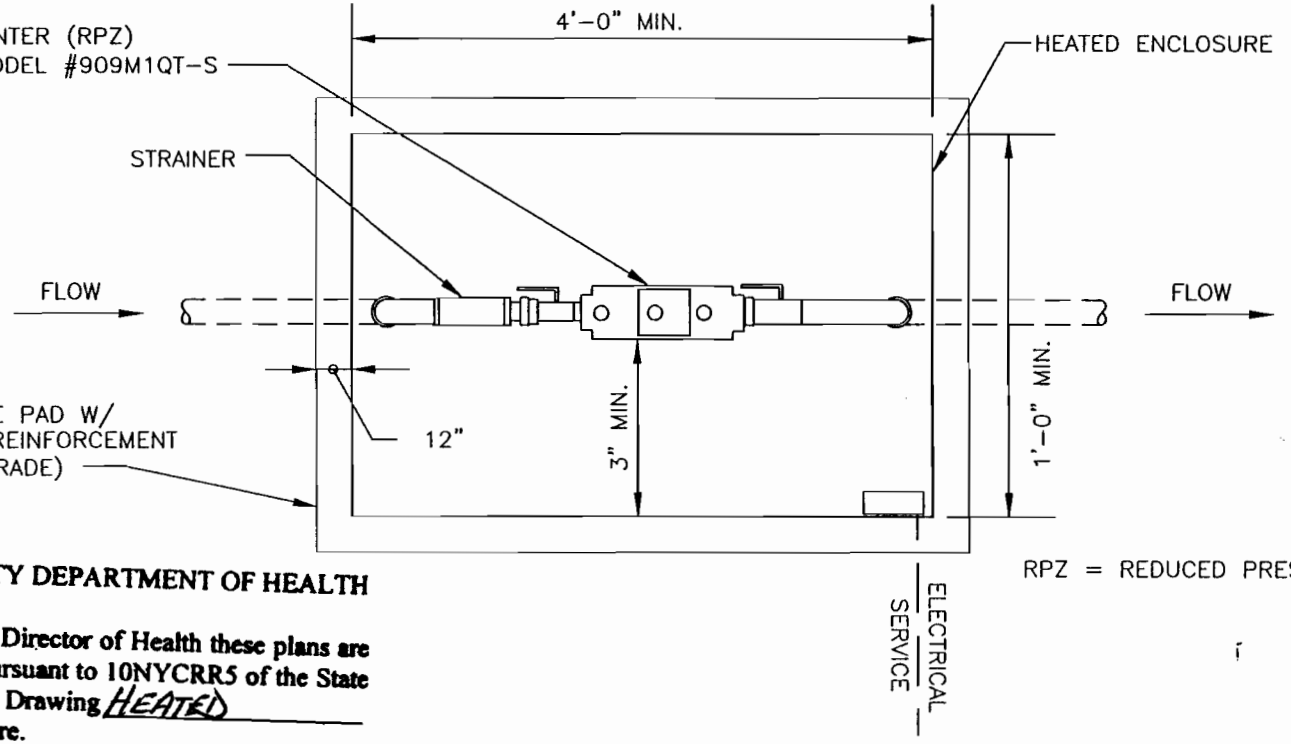

RPZ = REDUCED PRESSURE ZONE

MONROE COUNTY DEPARTMENT OF HEALTH

By direction of the Director of Health these plans are hereby approved pursuant to 10NYCRR5 of the State Sanitary Code. See Drawing HEATED **for date and signature.**

HEATED ENCLOSURE– PLAN DETAIL

NOT TO SCALE.

NOTES

1. HEATED ENCLOSURE SHALL BE FIBERGLASS INSULATED BOX WITH HINGED, LOCKABLE LID AND DRAIN PORTS CAPABLE OF HANDLING DISCHARGE FROM RPZ BACKFLOW PREVENTER.
2. ALL PIPING WITHIN ENCLOSURE SHALL BE ADEQUATELY HEATED TO PREVENT FREEZING.
3. ALL SUPPORTS, ANCHORS, BOLTS, ETC. TO BE STAINLESS STEEL.
4. ENCLOSURE AND CONCRETE PAD SHALL BE SIZED ACCORDING TO MANUFACTURER'S RECOMMENDATIONS. ENCLOSURE SHALL BE HOT BOX HB2ST OR EQUAL.
5. SEE ATTACHED PLAN FOR RPZ SIZE AND LOCATION.

University of the State of New York
C. MICHAEL ELLIOTT
No. 055513
Professional Engineer

Stearns & Wheler, LLC
ENVIRONMENTAL ENGINEERS & SCIENTISTS
CAZENOVIA, NEW YORK

DATE: 10/99 JOB No.:70318KD

BACKFLOW PREVENTER INSTALLATION
LEHIGH VALLEY RR DERAILMENT SITE
MCWA / LCWSA

1 1/2" BACKFLOW PREVENTER
STANDARD HEATED ENCLOSURE DETAIL

HOT BOX®
(800) 736-0238
(904) 786-0204
FAX (904) 783-6965
http://www.hot-box.com
Email: sales@hot-box.com

THE ORIGINAL

HOT BOX®

"THE ENGINEERED ENCLOSURE"™

SUBMITTAL DATA SHEET
BULLETIN NO: 35

Models No.:
HB.75 through HB3E
-Fiberglass-

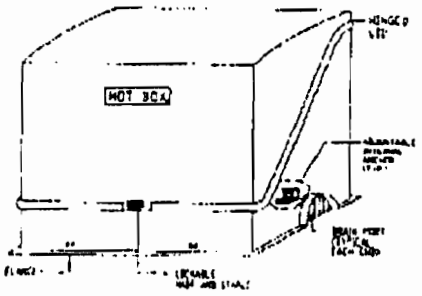

Fiberglass color is Standard Beige. Optional Colors Available at Modest Upcharge.

Models No. HB4N through HB8E
-Aluminum-

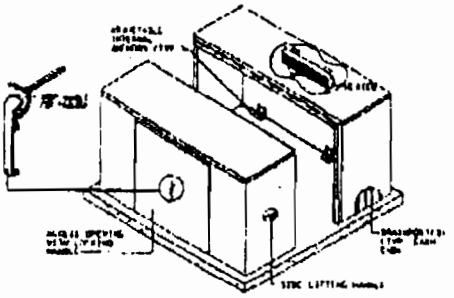

Top View (2 pieces)

Models No: HB4FEM through HB8FEM*
-Fiberglass-
"DESIGNER Series"

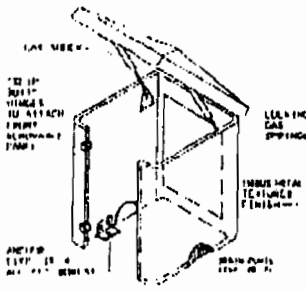

Models No: HB10FE*
-Fiberglass-

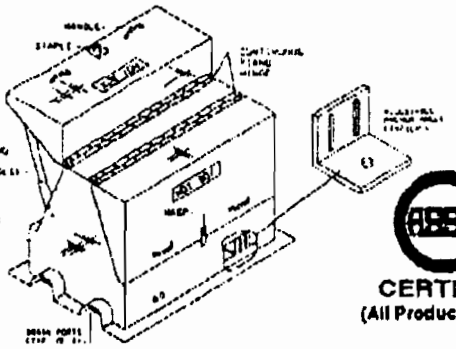

Models No: HB10N through HB10ES and "S" Models 6 & above,
-Aluminum-

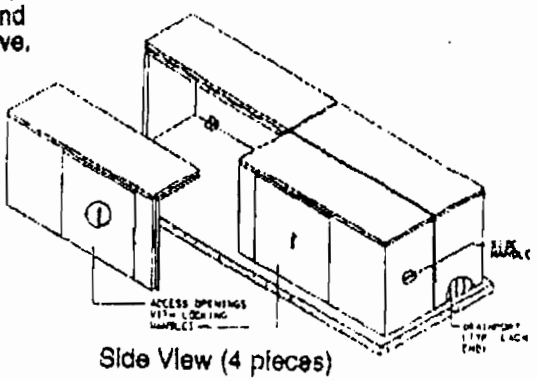

Side View (4 pieces)

CERTIFIED
(All Products Listed)

Patent Pending
* "F" enclosures designed for "N" Pattern Valves.

SPECIFICATION:

Exposure to freezing conditions will result in improper functioning of backflow prevention assemblies, pumps and meters. Devices subjected to potential freezing conditions shall be protected with the Hot Box® insulated enclosure as designed and manufactured by Hot Box® of Jacksonville, Florida.

The enclosure shall be of reinforced aluminum or fiberglass construction, providing access through doors and/or a hinged lid for testing/certification and being totally removable for maintenance purposes. The enclosure shall be structurally lined with a unicellular non-wicking insulation and contain a thermostatically controlled heat source mounted to the interior wall or to the BFP device, for protection to -30° F. No bare wood or "Particle Board" shall be allowed in assembly. Glue applied insulation shall be cause for rejection. Power source will be protected with a ground fault circuit interrupting receptacle, U.L. 943, N.E.M.A. 3R, installed by others, inside the box.

The enclosure shall contain drain openings for "RP" devices sized to accommodate the maximum discharge of the "RP" and to open for discharge under the most severe conditions. These openings are protected against intrusion of either wind, debris or animal. The enclosure is provided with means of permanent anchor and "lockable" access doors and/or lid to prohibit theft or vandalism.

The enclosure shall be certified as meeting the requirements of ASSE 1060 - "Performance Requirements For Outdoor Enclosures".

U.S. PATENT #33,523

PHYSICAL PROPERTIES:

1. Minimum 18 gauge construction.
2. Structural unicellular insulation.
3. Lockable.
4. Relief ports at enclosure grade level.
5. Hot Box® designed to protect to -30° F.
6. Minimum R of 8
7. Unit is a Lok Box™ when supplied without heat.

HOT BOX® FEATURES:

1. Allows for the installation of the BFP device "at the service connection" in accordance with AWWA Standards.
2. Is specifically designed to meet N.F.P.A. guide-lines. The enclosure provides freeze protection to maintain the water supply to a property's fire sprinkler system. (N.F.P.A. 3-3.1.8 & 3-6.1.3.2)
3. Is the logical alternative to "pit installations" (which are seldom recommended by BFP manufacturers, and often are against local code), eliminating "Confined Spaces" hazards.
4. Strategically placed access doors allow for the periodic maintenance encountered, and the systematic testing/certification required by local codes - without removal of the entire unit.
5. Is completely collapsible, removable and replaceable; allowing for major maintenance and/or replacement of backflow prevention equipment without the need for replacement of freeze protection services.
6. Custom enclosures are readily available for most individual applications.

HOT BOX®

"THE ENGINEERED ENCLOSURE"™

Application:

1. Enclosure supplied with "anchor angles" at grade.
   a. Recommended installation: on concrete slab

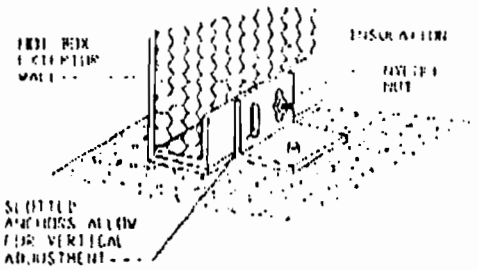

2. N.R.S. (non-rising stem) valve handles enclosed inside enclosure.

3. O S & Y (outside stem and yoke) valve handles and stems concealed inside enclosure roof ("E").

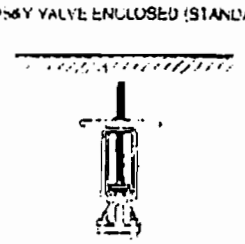

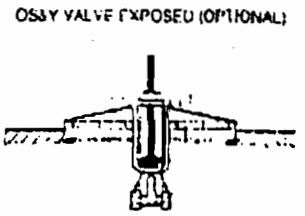

4. O S & Y valve handles and stems can also be exposed outside enclosure ("O") as a custom unit.

STANDARD ENCLOSURE INFORMATION

MODEL NUMBER	PIPE SIZE	INSIDE LENGTH	INSIDE WIDTH	INSIDE HEIGHT	HEATER SIZING (120V, 1Ø)	SHIPPING WEIGHTS	MOUNTING PAD SIZE
				FIBERGLASS			
HB.75	3/4" - 1"	19"	11"	22"	30W CABLE	30#	28 X 20
HB1	3/4" - 1"	27"	13"	23"	60W CABLE	35#	36 X 22
HB1T*	3/4" - 1"	27"	13"	35"	60W CABLE	50#	36 X 22
HB1.5	3/4" - 1-1/2"	33"	21"	24"	60W CABLE	50#	44 X 32
HB2	1-1/4" - 2"	39"	13"	23"	90W CABLE	50#	50 X 24
HB2S	1-1/4" - 2"	47"	13"	23"	90W CABLE	85#	58 x 24
HB2T*	1-1/4" - 2"	39"	13"	35"	90W CABLE	60#	50 X 24
HB2ST	1-1/4" - 2"	47"	13"	35"	90 W CABLE	95#	58 x 24
HB3N	2-1/2" - 3"	70"	26"	45"	1000W HEATER	325#	82 X 38
HB3NS	2-1/2" - 3"	83"	26"	45"	1500W HEATER	340#	95 x 38
HB3E	2-1/2" - 3"	70"	26"	55"	1500W HEATER	385#	82 X 38
HB3ES	2-1/2" - 3"	83"	26"	55"	1500W HEATER	425#	95 x 38
HB4FEM+	2-1/2" - 4"(N)	41"	41"	45"	1000W HEATER	210#	53 x 53
HB6FEM+	6"(N)	47"	47"	49"	1500W HEATER	240#	57 x 57
HB8FEM+	8"(N)	53"	53"	56"	1500W HEATER	300#	63 x 63
HB10FE+	10"(N)	62"	54"	56"	2000W HEATER	490#	74 x 66
				ALUMINUM			
HB4N	4"	90"	32"	50.5"	2000W HEATER	370#	102 X 44
HB4NS	4"	102"	32"	50.5"	2000W HEATER	400#	114 x 44
HB4E	4"	90"	32"	57.5"	2000W HEATER	400#	102 X 44
HB4ES	4"	102"	32"	57.5"	2000W HEATER	450#	114 x 44
HB6N	6"	105"	36"	53"	2000W HEATER	450#	117 X 48
HB6NS	6"	125"	36"	53"	2/1500W HEATERS	475#	137 X 48
HB6E	6"	105"	36"	64"	2/1500W HEATERS	500#	117 X 48
HB6ES	6"	125"	36"	64"	2/1500W HEATERS	525#	137 X 48
HB8N	8"	118"	40"	58"	2/1500W HEATERS	540#	130 X 52
HB8NS	8"	142"	40"	58"	2/1500W HEATERS	550#	154 X 52
HB8E	8"	118"	40"	74"	2/1500W HEATERS	575#	130 X 52
HB8ES	8"	142"	40"	74"	2/2000W HEATERS	610#	154 X 52
HB10N	10"	142"	42"	65"	2/1500W HEATERS	600#	154 X 54
HB10NS	10"	172"	42"	65"	2/2000W HEATERS	675#	184 X 54
HB10E	10"	142"	42"	85"	2/2000W HEATERS	700#	154 X 54
HB10ES	10"	172"	42"	85"	2/2000W HEATERS	775#	184 X 54

"T" = 30" Centerline (CL) mounting "N" = Narrow Enclosure

+ "F" = Enclosures designed for "N" Pattern Valves.

4", 6" and 8" are THE MODULAR DESIGNER SERIES (FLM) also available as "Flip Top" style (FE).

Custom designed and sized enclosures available - consult factory.

Substitute "LB" above for "HB" when ordering unit without heat.

(N = NRS, O = OS&Y Exposed, F = OS&Y Enclosed, F = Designed for "N" Pattern Valves)

Heater Notes:

1. 30W through 90W are heating cables, UL listed, CSA certified.
2. 1000W+ are wall mounted air heaters, ETL listed.
3. All circuits are 120 volt, single phase.
4. Service to Hot Boxe must be installed in accordance with the National Electric Code and local ordinances, and protected with a G.F.I.

DISTRIBUTED BY:

LIMITED WARRANTY: Hot Boxe makes every effort to assure that its products meet high quality and durability standards, and warrants to the original retail customer that our product will be free from defects in material and workmanship as follows:

- 1-year limited warranty on all products from date of purchase. Should any trouble develop, return the COMPLETE unit prepaid to the factory after obtaining a return authorization number. If inspection shows it is caused by defective workmanship or materials, repair and return will be made without charge. The company will not be responsible for any expenses incurred in installation, removal from service, transportation cost, or for damages of any type whatsoever, including incidental or consequential damages. This warranty does not apply to defects due to misuse, abuse, negligence, accidents, repairs, or alterations outside our factory or for a lack of maintenance. We shall in no event be liable for death, injuries to persons or property, or for incidental, contingent, special or consequential damages arising from the use of our product. This warranty gives you specific legal rights, and you may also have other rights which vary from state to state.

Owner should test heater annually prior to each winter season.

US PATENT #33,523

R. 2/88

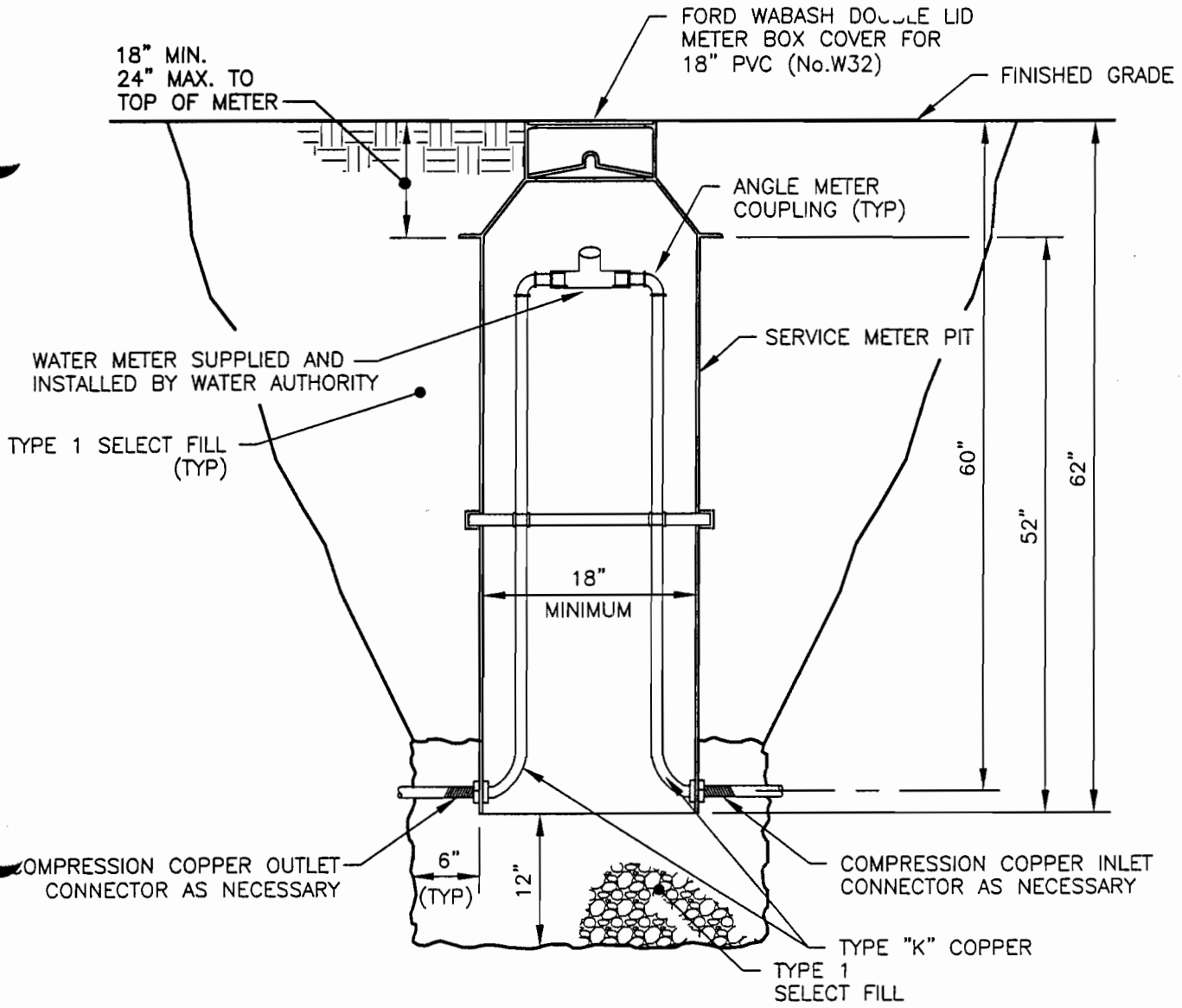

SERVICE METER PIT FOR EXTERIOR METERS

N.T.S.

NOTE:
CONTRACTOR SHALL BE RESPONSIBLE FOR ALL COSTS ASSOCIATED WITH SERVICE METER INSTALLATION, INCLUDING WATER AUTHORITIES FEE FOR SUPPLY AND INSTALLING METER

Stearns & Wheler, LLC
ENVIRONMENTAL ENGINEERS & SCIENTISTS
CAZENOVIA, NEW YORK

DATE:7/2/99 JOB No.:70318KD

SERVICE METER PIT INSTALLATION
LEHIGH VALLEY RR DERAILMENT SITE
MONROE COUNTY WATER AUTHORITY

SERVICE METER PIT FOR
EXTERIOR METERS

99/5 FSE
N:\CADUSER\70318KD\FIGURES\70318F28.DWG

CROSS CONNECTION CONTROL
SITE INSPECTION REPORT

FACILITY NAME Falcon Trap and Game Club ACCOUNT _____
STREET Lime Rock Road TOWN _____
CITY _____, NY _____ PHONE _____
INSPECTED BY P. Woodard DATE 4-16-99

DOMESTIC SERVICE: SIZE — METER S/N —
FIRE SERVICE: SIZE n/a CLASS n/a PRIVATE HYDRANTS no
SIAMESE CONNECTION no AUXILIARY SUPPLY Well
WATER USAGE Kitchen - Slop sink, bathrooms, showers
bar sink with trap primer

HEATING SYSTEM oil (Boiler)

COOLING SYSTEM No

SEWAGE SYSTEM Sept

LAWN IRRIGATION SYSTEM no

DETERMINATION: HAZARDOUS ✓ NON-HAZARDOUS _____
REASONS FOR DETERMINATION
Boiler, Trap primer

REMARKS Contact person - T. Lionel Boutte
3714 Latta Rd.
Rochester, NY 14612

PERSON CONTACTED Floyd Wilson
ENTERED IN COMPUTER: BY _____ DATE _____

March 1, 1995

NEW YORK STATE DEPARTMENT OF HEALTH
Bureau of Public Water Supply Protection

Application For Approval of Backflow Prevention Devices

PRINT OR TYPE ALL ENTRIES EXCEPT SIGNATURES
Please complete items 1 through 12a + Block and Lot Numbers

Block #	Lot #	FOR DEPARTMENT USE ONLY
1	16	Log No.

1. Name of Facility: Falcon Trap and Game Club
2. City, Village, Town: Town
3. County: Monroe

4. Location of Facility — street: Lime Rock Road; city: Wheatland; state: NY; zip: 14482

4a. Phone Numbers: (716) 334-5670
Contact Person: John Campbell

5. Approx. Location of Device(s): Within a heated enclosure
North of the building
6. Mfg. Model #: Watts #709M1QT-S
Size of Device(s): 1½"

# of Fire Services	# of Domestic Services	# of Combined Services	Total # of Services	Total # of Buildings
0	1	0	1	1

7. Name of Owner: MEMBERSHIP OF CLUB
Title:
Phone Number: 538-6387
Full Mailing Address — street: LIME ROCK ROAD; city: WHEATLAND; state: N.Y.; zip: 14482
Owner's Signature: CLUB MEMERSHIP
Date: m 7 d 12 y 99

8. Nature of works
- ☒ initial Device Installation
- ☐ Replace Existing Device

8a.
- ☐ New Service
- ☒ Existing Service

8b.
- ☐ New Building
- ☒ Existing Building
- ☐ Major Renovation

9. Name of Design Engineer or Architect: Stearns - Wheler, LLC
Address — street: One Remington Park Drive; city: Cazenovia; state: NY; zip: 13035

University of the State of New York — C. MICHAEL ELLIOTT — No. C55513 — Professional Engineer

Original ink signature and seal required on all copies.

10. NYS License #: [illegible]
☒ PE ☐ RA ☐ Other
10a. Telephone Number(s): (315) [illegible]-8161

Date: m 9 d 29 y 99

11. Water System Pressure (psi) at Point of Connection: Max 53 Avg 50 Min 40
12. Estimate Installation Cost: $4,500
12a. Estimate Design Cost: $2,000

13. Degree of Hazard
- ☒ Hazardous
- ☐ Aesthetically Objectionable

List of processes or reasons that lead to degree of hazard checked: Boiler heats facility

14. Public water supply name: Monroe County Water Authority
Name of supplier's designated representative: Paul Springer
Mailing address — street: 475 Norris Drive; city: Rochester; state: NY; zip: 14610
Title: Senior Construction Inspector
Telephone No.: (716) 442-2000
Signature*: Paul Springer
Date: m 1 d 24 y 00
* Your signature endorses proposal

Note: All applications must be accompanied by plans, specifications and an engineer's report describing the project in detail. The project must first be submitted to the water supplier, who will forward it to the local public health engineer. This form must be prepa in quadruplicate with four copies of all plans, specifications and descriptive literature.

Change Orders

LEHIGH VALLEY RAILROAD DERAILMENT SITE
NYSDEC SITE NUMBER: 8-19-014
STATE CONTRACT NUMBER: D004327
CHANGE ORDER NUMBER: 1

Change Order Amount: **$12,040.00**

Date of Issue: April 5, 2002

Contractor: Milherst Construction, Inc.
2601 Millersport Highway
P.O. Box 631
Getzville, NY 14068-0631

Engineer: Stearns & Wheler, LLC
One Remington Park Drive
Cazenovia, NY 13035

Change Order Items: This Change Order comprises three (3) items as discussed below.

I. CHANGE ORDER ITEMS

1. INSTALLATION OF EXPANSION TANKS.

DESCRIPTION OF CHANGE:

Installation of expansion tanks at all service connections where a backflow preventer is being installed.

DRAWING REFERENCE: Not Applicable.

SPECIFICATION REFERENCE: Section VIII; 10, Change of Contract Price or Time.

CONTRACT PAY ITEM NO.: Not Applicable.

REASON FOR CHANGE:

This change order item is necessary for:

Previous experience with the installation of backflow preventers has shown that the backflow preventer does not allow for expansion of hot water and can lead to breaks and/or leaks in the internal piping of a building. Expansion tanks will allow this expansion and prevent this type of problem.

COST:

37 units @ $203.00 per each.

Subtotal 1 **$7,511.00**

2. INSTALLATION OF WATER WELL.

DESCRIPTION OF CHANGE:

Installation of water well and related piping at Dolomite Rock Quarry off Gulf Road.

DRAWING REFERENCE: Not Applicable.

SPECIFICATION REFERENCE: Section VIII; 10, Change of Contract Price or Time.

CONTRACT PAY ITEM NO.: No Applicable.

REASON FOR CHANGE:

This change order item is necessary for:

Rock Quarry's existing well is contaminated.

COST:

Drill well and test	$ 4,253.00	
Install pump and piping	$11,612.00	
	Subtotal 2	**$15,865.00**

(continued)

3. REMOVAL OF METERS AND FITTINGS IN VAULTS.

DESCRIPTION OF CHANGE:

Removal of meters, related fittings, apparatus, etc. in Meter Vaults A, B, and C.

DRAWING REFERENCE: Not Applicable.

SPECIFICATION REFERENCE: Section VIII, 10, Change of Contract Price or Time.

CONTRACT PAY ITEM NO.: Not Applicable.

REASON FOR CHANGE:

This change order item is necessary for:

LCWSA and MCWA no longer require meters at the County lines.

COST:

Delete meter and fittings in vaults.

Subtotal 3 ($11,336.00)

II. CHANGE ORDER NUMBER 1 SUMMARY

1.	Expansion Tanks	$7,511.00
2.	Water Well	$15,865.00
3.	Delete Meters and Fittings	($11,336.00)
	TOTAL	**$12,040.00**

III. CHANGE IN CONTRACT PRICE

Original Contract Price:	$6,394,855.00
Contract Price after previous approved Change Orders:	$6,394,855.00
Net Increase Due to this Change Order:	$12,040.00
New Contract Price including this Change Order:	**$6,406,895.00**

IV. CHANGE IN CONTRACT TIME

Notice to Proceed: December 21, 2001

	SUBSTANTIAL COMPLETION		FINAL COMPLETION	
	Calendar Days	Date	Calendar Days	Date
Original Contract Time	460	March 26, 2003	520	May 25, 2003
Contract Time after previous Change Orders	460	March 26, 2002	520	May 25, 2003
Net Increase due to this Change Order	0	March 26, 2003	0	May 25, 2003
New Contract Time including this Change Order	**460**	**March 26, 2003**	**520**	**May 25, 2003**

It is understood and agreed that, unless expressly so stated above, the work herein authorized will not extend the time for completion of the Contract.

It is understood and agreed that this change order represents full and complete compensation for all work described herein.

This work is to be performed in accordance with the terms of the Contract and original plans and specifications, except as herein modified. It is also understood and agreed that this change order shall be deemed executory only to the extent of moneys available and no liability shall be incurred by the State beyond the moneys available for the purpose.

IN WITNESS WHEREOF, representatives of the Department and Contractor have executed this contract on the day and year written beneath their respective signatures. The signatory for the Department provides the following Agency Certification: "In addition to the acceptance of this contract, I also certify that original copies of this signature page will be attached to all other exact copies of this contract."

Recommended:

By: Michael J. Hanley

Title: DIV DER

Date: 4/25/02

FOR DEPARTMENT

By: Dorothy Pinchbeck

Title: Assoc Budget Analyst

Date: 5/6/02

FOR ENGINEER

By: Michael Elmendorf

Title: Principal

Date: 4/06/02

FOR CONTRACTOR MILHERST CONSTRUCTION INC.

By: James L. Collins, V-President
James L. Collins, Jr

Title: Vice President

Date: April 15, 2002

Approved as to Form:

By:

Attorney General

Date:

APPROVED AS TO FORM
NYS ATTORNEY GENERAL
MAY - 8 2002
PETER FAVRETTO
ASSOCIATE ATTORNEY

Approved:

By: Noreen Naudascher

State Comptroller

Date: 05/15/02

STATE OF)
) SS:
COUNTY OF)

On the ___ day of _____, 20__, before me personally came _____, to me known, who being duly sworn, did depose and say that (s)he resides in _____, New York; that (s)he is _____ of _____, the corporation described in and which executed the above instrument; that (s)he knows the seal of said corporation; that the seal affixed to said instrument is such corporate seal; that it was so affixed by authority of the Board of Directors of said corporation and that (s)he signed his/her name thereto by the same authority.

_____
Notary Public

STATE OF)
) SS:
COUNTY OF)

On the ___ day of _____, 20__, before me personally came _____, to me known, who being duly sworn, did depose and say that (s)he resides in _____, New York; that (s)he is _____ of _____, the corporation described in and which executed the above instrument; that (s)he knows the seal of said corporation; that the seal affixed to said instrument is such corporate seal; that it was so affixed by authority of the Board of Directors of said corporation and that (s)he signed his/her name thereto by the same authority.

_____
Notary Public

STATE OF NEW YORK)
) SS:
COUNTY OF MADISON)

On the 8th day of April, 2002, before me personally came C. MICHAEL ELLIOTT, to me known and, who being duly sworn, stated that he is a PRINCIPAL of STEARNS & WHELER, LLC, the firm described in and which executed the foregoing instrument, and he acknowledged to me that he subscribed his name thereto on behalf of said firm.

Judith F. Sutherland
Notary Public
JUDITH F. SUTHERLAND
Notary Public in the State of New York
Appointed in Madison Co. No. 4770407
My Commission Expires March 30, 2006

STATE OF)
) SS:
COUNTY OF)

On the 15th day of April, 2002, before me personally came James L. Collins Jr. to me known and, who being duly sworn, stated that he is a Vice President member or employee of Milherst Constr. Inc. the firm described in and which executed the foregoing instrument, and (s)he acknowledged to me that he subscribed his name thereto on behalf of said firm.

Charles F. Kubiniec Jr.
Notary Public

CHARLES F. KUBINIEC, JR.
NOTARY PUBLIC, STATE OF NEW YORK
QUALIFIED IN NIAGARA COUNTY
Reg. No. 4946122
My Commission Expires Jan. 27, 03

STATE OF)
) SS:
COUNTY OF)

On the ___ day of _____, 20___, before me personally came _____ _____, to me known and, known to me to be the individual described in, and who executed the foregoing instrument, and (s)he duly acknowledged to me that (s)he executed the same.

_____
Notary Public

STATE OF)
) SS:
COUNTY OF)

On the ___ day of _____, 20___, before me personally came _____ _____, to me known and, known to me to be the individual described in, and who executed the foregoing instrument, and (s)he duly acknowledged to me that (s)he executed the same.

_____
Notary Public

Milherst Construction, Inc.

2601 MILLERSPORT HWY. • P.O. BOX 631
GETZVILLE, NY • 14068-0631
(716) 688-9098 • FAX (716) 688-9562

March 14, 2002

Titus J. Falkenburg, P.E.
Stearns & Wheeler, LLC
One Remington Drive
Cazenovia, New York 13035

Ref: Water Distribution System — Revision 1
Lehigh Valley Railroad Derailment Site
NYSDEC Contract D004327
Milherst Job Number 01126

Gentlemen:

Please refer to Proposed Change Order No. 1 issued January 10, 2002.

We propose to complete the proposed changes for agreed upon lump sums listed:

1. Installation of expansion tanks...37 units @ $ 203.00 = $ 7,511.00
2. Installation of water well at Dolomite: Total LS = $ 15,865.00
   (Drill well and test: @ $ 4,253.00)
   (Furnish & install pump and piping to 150' @ $ 11,612.00)
3. Delete meter and fittings in vaults: Total LS deduct of ($ 11,336.00)

Net proposed change order = $ 12,040.00

Attached please find the appropriate backup required.

Please call if you have a question.

Very truly yours,
Milherst Construction, Inc.

By Charles F. Kubiniec
Charles F. Kubiniec
Project Manager

Encl:

Cc: Michael J. Cruden, P.E.

Milherst Construction, Inc.
P.O. Box 631
Getzville, NY 14068-0631

Phone (716) 688-9098
Fax (716) 688-9562

Proposed Change Order 1 Revision 1

Water Distribution System
Lehigh Valley Railroad Derailment Site No. 8-19-014
NYSDEC Contract D004327

Item 1 Furnish and install expansion tanks on cold water supply side of hot water tank.

Approximately 37 will be required. (See items 28A, 28B, 28C, 28E, & 28G.)

We estimate a plumber and laborer will require 1 Hr. to install at each house.

Labor>>>>>>	Add				Rate	Extension		
	Plumber	37 Hrs.	@	$	46.13	$ 1,706.81		
	Laborer	37 Hrs.	@	$	40.02	$ 1,480.74		
						$ 3,187.55		
	Contractors Fee		@		15.00%	$ 478.13		
						$ 3,665.68	$	3,665.68
Material >>>>	ADD							
	Expansion Tank		37 @	$	66.87	$ 2,474.19		
						$ -		
		Net				$ 2,474.19		
	Contractors Fee		@		10%	$ 247.42		
						$ 2,721.61	$	2,721.61
Equipment >>	ADD							
	Foreman pickup		55.5 @	$	7.75	$ 430.13		
	Crew van w/ tools		55.5 @	$	12.40	$ 688.20		
						$ 1,118.33	$	1,118.33
					TOTAL ITEM 1 >>>>>>		$	7,505.62
					Unit Price >>>>>>>>>>		$	202.85

37 @ 203.00 = 7,511.00

Milherst Construction, Inc.
P.O. Box 631
Getzville, NY 14068-0631

Phone (716) 688-9098
Fax (716) 688-9562

Proposed Change Order 1 Revision 1

Water Distribution System
Lehigh Valley Railroad Derailment Site No. 8-19-014
NYSDEC Contract D004327

Item 2 Water Well at Dolomite Quarry - Install Pump & Piping

Labor>>>>>> ADD
Milherst crew to hoe ram rock at well casing

			Rate	Extension	
Foreman	1 Hrs.	@ $	54.19	$ 54.19	
Operator	3 Hrs.	@ $	52.87	$ 158.61	
Milherst to excavate trench, provide bedding sand and select backfill: Crew 4 Hours.					
Foreman	4 Hrs.	@ $	54.19	$ 216.76	
Laborer	4 Hrs.	@ $	40.02	$ 160.08	
2-Operator	8 Hrs.	@ $	52.87	$ 422.96	
Teamster	4 Hrs.	@ $	40.01	$ 160.04	
				$ 1,172.64	
Contractors Fee		@	15.00%	$ 175.90	
				$ 1,348.54	$ 1,348.54

Material >>>> ADD

Bedding Sand/Ton	22.22222	@ $	5.50	$ 122.22		
Select Backfill/Ton	100	@ $	4.75	$ 475.00		
				$ 597.22		
Contractors Fee		@	10%	$ 59.72		
				$ 656.94	$ 656.94	

Equipment >> ADD

Foreman pickup	5	@ $	7.75	$ 38.75	
Crew van w/ tools	4	@ $	12.40	$ 49.60	
Tandem	4	@ $	34.10	$ 136.40	
Cat 325 Hoe	4	@ $	43.40	$ 173.60	
Cat 938 Loader	4	@ $	34.72	$ 138.88	
Cat 325 Hoe w/ Hamm	3	@ $	86.80	$ 260.40	
				$ 797.63	$ 797.63

Subcontractors ADD

Mob Milherst Equip / H	2	@ $	70.00	$ 140.00	
Install pump and piping(Nothnagle 3,4,& 5)				$ 8,250.00	
				$ 8,390.00	
Contractors Fee		@	5%	$ 419.50	
				$ 8,809.50	$ 8,809.50

Total to Install Pump, conduit,piping to Bldg>>>>>>>>>>>>> $ 11,612.61 11,612.50

Item 2 Drill Well and Test

Subcontractors ADD

Drill Well & Test(Nothnagle 1 & 2)			$ 4,050.00	
			$ 4,050.00	
Contractors Fee	@	5%	$ 202.50	
			$ 4,252.50	$ 4,252.50 4,253.50

Item 2 Both Phases of Work $ 15,865.11 15,865.00

NOTE: No restoration costs are included other than backfill with select fill.
(ie no topsoil & seeding, pavement restoration, etc.)

Milherst Construction, Inc.
P.O. Box 631
Getzville, NY 14068-0631

Phone (716) 688-9098
Fax (716) 688-9562

Proposed Change Order 1 Revision 1

Water Distribution System
Lehigh Valley Railroad Derailment Site No. 8-19-014
NYSDEC Contract D004327

Item 3 Removal of meters, fittings, and related apparatus in meter vaults.

Labor>>>>>> DEDUCT
We estimated a Foreman and 2 pipelayers for 30 hours to install the items deleted.
(6 hours for A + 9 hours for B + 9 hours for C)
We estimated the same crew will require 4 hours to install the 8" pipe thru the vaults.
(1 hour for A + 1-1/2 hours for B + 1-1/2 hours for C)

Net deduct in labor = 26 Crew Hours

			Rate	Extension	
Foreman	-26 Hrs.	@ $	54.19	$ (1,408.94)	
Pipelayer	-52 Hrs.	@ $	40.29	$ (2,095.08)	
				$ (3,504.02)	
Contractors Fee (1/2 of 15%)		@	7.50%	$ (262.80)	
				$ (3,766.82)	$ (3,766.82)

Material >>>> DEDUCT

8"x6" Flg. Reducer	-10 @	$	110.00	$ (1,100.00)	
8" Flg. Coupling adapt	-5 @	$	125.00	$ (625.00)	
8"x18" Flg x PE	-5 @	$	73.00	$ (365.00)	
8" Check Valves	-5 @	$	1,017.00	$ (5,085.00)	
Pipe Supports	-9 @	$	65.00	$ (585.00)	
Tie rods/duck lugs etc	-3 @	$	50.00	$ (150.00)	
ADD					
Pipe thru vault	5 @	$	240.00	$ 1,200.00	
Net				$ (6,710.00)	
Contractors Fee (1/2 of 10%)	@		5%	$ (335.50)	
				$ (7,045.50)	$ (7,045.50)

Equipment >> DEDUCT

Foreman pickup	-26 @	$	7.75	$ (201.50)	
Crew van w/ tools	-26 @	$	12.40	$ (322.40)	
				$ (523.90)	$ (523.90)

TOTAL ITEM 3 >>>>>> $(11,336.22)

Round: $11,336.22

NOTHNAGLE *DRILLING, INC.*

1821 Scottsville-Mumford Road
Scottsville, New York 14546
(585) 538-2328
Fax (585) 538-2357

March 14, 2002

Millherst Construction, Inc.
P.O. Box 631
2601 Millersport HWY
Getzville, NY 14068-0631

RE: Drilling and Testing Services
Lehigh Valley RR Spill
Leroy, NY

ATTN: Mr. Chip Kubiniec

Dear Chip:

Below please find applicable unit costs to perform drilling services at the above referenced location.

1.	Drill & Install 8" Well to 150', including, sch. 40 steel casing grouted in place, per the specifications	LUMP SUM:	$3600.00
2.	Bacteriological(T. Colliform & E. Coli Bacteria), POC (includes TCE) Test	LUMP SUM:	$450.00
3.	Install temporary pump, supply generator, perform drawdown test	LUMP SUM:	$1000.00
4.	Install well pump, pitless and piping 150' from well head	LUMP SUM:	$4800.00
5.	Blast trench 150' from well to facilitate water line, 5-10 Ft. of Hoe ramming (by Milherst)should be anticipated to tie into well.	LUMP SUM:	$2450.00

We anticipate setting 20 Ft. of 6" black iron pipe. We understand that no structures need to be pre-blasted, costs associated with pre blasting and seismograghing will be handled same as NEI's primary contract. As per our phone conversation Milherst is to excavate trench and place sand cradle around the copper water line.

We appreciate the opportunity to submit this proposal.

Sincerely,

Timothy M. Nothnagle

Timothy M. Nothnagle
President

LEHIGH VALLEY RAILROAD DERAILMENT SITE
NYSDEC SITE NUMBER: 8-19-014
STATE CONTRACT NUMBER: D004327
CHANGE ORDER NUMBER: 2

Change Order Amount: **$21,412.96**

Date of Issue: January 24, 2003

Contractor: Milherst Construction, Inc.
2601 Millersport Highway
P.O. Box 631
Getzville, NY 14068-0631

Engineer: Stearns & Wheler, LLC
One Remington Park Drive
Cazenovia, NY 13035

Change Order Items: This Change Order comprises six (6) items as discussed below.

I. CHANGE ORDER ITEMS

1. SPRING CREEK WATER MAIN CROSSING.

DESCRIPTION OF CHANGE:

Installation of water main over existing culvert with insulation instead of boring under the creek.

DRAWING REFERENCE: G-18.

SPECIFICATION REFERENCE: Section VIII; 10, Change of Contract Price or Time.

CONTRACT PAY ITEM NO.: Not Applicable.

REASON FOR CHANGE:

This change order item is necessary for:

Boring Spring Creek would put the water main about 18 feet below grade. Due to high groundwater from nearby springs, this would be an extremely difficult operation and would cause problems in the future for maintenance, if the pipe needs to be excavated.

COST:

Open cut pipeline with insulation and additional fittings.

Subtotal 1 $14,321.70

2. NEW PROCEDURE FOR WELL ABANDONMENT.

DESCRIPTION OF CHANGE:

Change in the well abandonment procedure (Section 11393, Article 3.06).

DRAWING REFERENCE: Not Applicable.

SPECIFICATION REFERENCE: Section VIII; 10, Change of Contract Price or Time.

CONTRACT PAY ITEM NO.: No. 27.

REASON FOR CHANGE:

This change order item is necessary for:

Abandonment procedure was changed in order to meet NYSDOH regulations.

COST:

Proposed Bid Item #27, 65 wells at $421 per well	$27,365	
Original Bid Item #27, 65 wells at $400 per well	$26,000	
	Subtotal 2	**$1,365.00**

(continued)

3. REMOVAL OF CHLORINATION FACILITIES.

DESCRIPTION OF CHANGE:

The removal of the booster chlorination facilities along NYS Route 5.

DRAWING REFERENCE: G-11.

SPECIFICATION REFERENCE: Section VIII; 10, Change of Contract Price or Time.

CONTRACT PAY ITEM NO.: Not Applicable.

REASON FOR CHANGE:

This change order item is necessary for:

With the completion of the MCWA's pump station and chlorination facilities along Route 19, there is no longer any need for our booster chlorination facilities.

COST:

Delete chlorination facilities.

Subtotal 3 ($5,043.26)

(continued)

4. ADDITIONAL THRUST BLOCKS.

DESCRIPTION OF CHANGE:

Installation of larger thrust blocks along Circular Hill Road.

DRAWING REFERENCE: G-27.

SPECIFICATION REFERENCE: Section VIII; 10, Change of Contract Price or Time.

CONTRACT PAY ITEM NO.: Not Applicable.

REASON FOR CHANGE:

This change order item is necessary for:

Due to existing pipeline and soil conditions, the new water main was required to be installed deeper with vertical bends, thus requiring larger thrust blocks.

COST:

Additional thrust blocks.

Subtotal 4 **$3,684.08**

(continued)

5. ADDITIONAL BOLLARDS.

DESCRIPTION OF CHANGE:

Installation of bollards along pipe in rural areas and near hydrants at the Genesee Country Museum.

DRAWING REFERENCE: Not applicable.

SPECIFICATION REFERENCE: Section VIII; 10, Change of Contract Price or Time.

CONTRACT PAY ITEM NO.: Not Applicable.

REASON FOR CHANGE:

This change order item is necessary for:

Bollards will assist in locating the water main in rural areas and will protect the hydrants in the Museum parking lot.

COST:

17 Bollards at $303 per each.

Subtotal 5 $5,151.00

(continued)

6. REMOVAL AND INSTALLATION OF CARBON FILTER SYSTEM.

DESCRIPTION OF CHANGE:

Removal of the carbon filter system from the Genesee Country Campground and having it re-installed at the Dolomite Rock Quarry off Gulf Road.

DRAWING REFERENCE: Not applicable.

SPECIFICATION REFERENCE: Section VIII; 10, Change of Contract Price or Time.

CONTRACT PAY ITEM NO.: Not Applicable.

REASON FOR CHANGE:

This change order item is necessary for:

Carbon filters were required on the new Dolomite Rock Quarry well.

COST:

Remove filters and re-install.

Subtotal 6 $1,934.44

II. CHANGE ORDER NUMBER 2 SUMMARY

1.	Spring Creek Water Main Crossing.	$14,321.70
2.	New Procedure for Well Abandonment	$1,365.00
3.	Removal of Chlorination Facilities	($5,043.26)
4.	Additional Thrust Blocks	$3,684.08
5.	Additional Bollards	$5,151.00
6.	Removal and Installation of Carbon Filter System	$1,934.44
	TOTAL	**$21,412.96**

III. CHANGE IN CONTRACT PRICE

Original Contract Price:	$6,394,855.00
Contract Price after previous approved Change Orders:	$6,406,895.00
Net Increase Due to this Change Order:	$21,412.96
New Contract Price including this Change Order:	**$6,428,307.96**

IV. CHANGE IN CONTRACT TIME

Notice to Proceed: December 21, 2001

	SUBSTANTIAL COMPLETION		FINAL COMPLETION	
	Calendar Days	Date	Calendar Days	Date
Original Contract Time	460	March 26, 2003	520	May 25, 2003
Contract Time after previous Change Orders	460	March 26, 2002	520	May 25, 2003
Net Increase due to this Change Order	0	March 26, 2003	0	May 25, 2003
New Contract Time including this Change Order	**460**	**March 26, 2003**	**520**	**May 25, 2003**

It is understood and agreed that, unless expressly so stated above, the work herein authorized will not extend the time for completion of the Contract.

It is understood and agreed that this change order represents full and complete compensation for all work described herein.

This work is to be performed in accordance with the terms of the Contract and original plans and specifications, except as herein modified. It is also understood and agreed that this change order shall be deemed executory only to the extent of moneys available and no liability shall be incurred by the State beyond the moneys available for the purpose.

IN WITNESS WHEREOF, representatives of the Department and Contractor have executed this contract on the day and year written beneath their respective signatures. The signatory for the Department provides the following Agency Certification: "In addition to the acceptance of this contract, I also certify that original copies of this signature page will be attached to all other exact copies of this contract."

Recommended:

By: _____

Title: Director

Date: FEB 2 5 2003

FOR DEPARTMENT

By: _____

Title: Assoc Budget Analyst

Date: 3/24/03

FOR ENGINEER

By: _____
C. Michael Elliott, P.E.

Title: Principal

Date: 1/28/03

FOR CONTRACTOR MILHERST CONSTRUCTION INC.

By: _____

Title: Vice President

Date: 1-30-2003

APPROVED AS TO FORM
NYS ATTORNEY GENERAL

Approved as to Form: Mar 11 2003

By: _____
Attorney General FAVRETTO
ASSOCIATE ATTORNEY

Date: _____

Approved:

By: _____
State Comptroller

Date: MAR 28 2003

STATE OF)
) SS:
COUNTY OF)

On the ___ day of _____, 20__, before me personally came _____, to me known, who being duly sworn, did depose and say that (s)he resides in _____, New York; that (s)he is _____ of _____, the corporation described in and which executed the above instrument; that (s)he knows the seal of said corporation; that the seal affixed to said instrument is such corporate seal; that it was so affixed by authority of the Board of Directors of said corporation and that (s)he signed his/her name thereto by the same authority.

_____
Notary Public

STATE OF)
) SS:
COUNTY OF)

On the ___ day of _____, 20__, before me personally came _____, to me known, who being duly sworn, did depose and say that (s)he resides in _____, New York; that (s)he is _____ of _____, the corporation described in and which executed the above instrument; that (s)he knows the seal of said corporation; that the seal affixed to said instrument is such corporate seal; that it was so affixed by authority of the Board of Directors of said corporation and that (s)he signed his/her name thereto by the same authority.

_____
Notary Public

STATE OF NEW YORK)
) SS:
COUNTY OF MADISON)

On the 24th day of January, 2003, before me personally came C. MICHAEL ELLIOTT, to me known and, who being duly sworn, stated that he is a PRINCIPAL of STEARNS & WHELER, LLC, the firm described in and which executed the foregoing instrument, and he acknowledged to me that he subscribed his name thereto on behalf of said firm.

Pamela A. Washbon
Notary Public
PAMELA A. WASHBON
Notary Public, State of New York
Qualified in Madison Co. No. 4933877
Commission Expires June 13, ~~19~~ 2006

STATE OF)
) SS:
COUNTY OF)

On the 30th day of January, 2003, before me personally came Ronald S. Mauer to me known and, who being duly sworn, stated that he is a member or employee of Milherst Construction Inc. the firm described in and which executed the foregoing instrument, and (s)he acknowledged to me that he subscribed his name thereto on behalf of said firm.

Charles F. Kubiniec Jr.
Notary Public
CHARLES F. KUBINIEC, JR.
NOTARY PUBLIC, STATE OF NEW YORK
QUALIFIED IN NIAGARA COUNTY
Reg. No. 4946122
My Commission Expires Jan. 27, 2005

STATE OF)
) SS:
COUNTY OF)

On the ___ day of _____, 20___, before me personally came _____ _____, to me known and, known to me to be the individual described in, and who executed the foregoing instrument, and (s)he duly acknowledged to me that (s)he executed the same.

_____
Notary Public

STATE OF)
) SS:
COUNTY OF)

On the ___ day of _____, 20___, before me personally came _____ _____, to me known and, known to me to be the individual described in, and who executed the foregoing instrument, and (s)he duly acknowledged to me that (s)he executed the same.

_____
Notary Public

Milherst Construction, Inc.

2601 MILLERSPORT HWY.
P.O. BOX 631
GETZVILLE, NY 14068-0631
PHONE: (716) 688-9098 • FAX: (716) 688-9562

November 13, 2002

Titus Falkenburg, P.E.
Stearns & Wheler, LLC
One Remington Park Drive
Cazenovia, NY 13035

Re: Proposed Change Order 2 Rev. 3
Water Distribution System
NYSDEC – Contract No. D004327

Gentlemen:

Please refer to your letter dated August 5, 2002 requesting cost proposals for Change Order No. 2, our proposal of August 19th, our revised proposal of September 16, 2002 and our revised proposal of October 29,2002.

We propose the following revision 3:

1.The Spring Creek water main crossing	$ 14,321.70 Add
2. Well abandonment procedure.	$ 1,365.00 Add
3. Remove chlorination facilities.	($ 5,043.26 Deduct)
4. Additional thrust blocks-Circular Hill	$ 3,684.08 Add
5. Add 17 bollards @ $ 303.00 each	$ 5,151.00 Add
NET CHANGE THIS REVISION	$ 19,478.52 Add

Please note that Item 22A (Bore for 8" DIP) will be reduced by 85 LF resulting in a savings of $ 48,875.00. Thus, looking at the big picture this alternative will provide a net savings of $ 29,396.48.

Attached please find a detailed summary and backup data for each of the Change Order Items.

Please call if you have a question.

Very truly yours,
Milherst Construction, Inc.

By Charles F. Kubiniec
Charles F. Kubiniec
Project Manager

Enclosure:

Milherst Construction, Inc.
P.O. Box 631
Getzville, NY 14068

Phone:(716) 688-9098
Fax:(716) 688-9562

Proposed Change Order No. 2

Item 1 Spring Street Bore

a. Costs incurred by Case Boring to excavate bore pit, identify the problems of the proposed bore, backfil, de-mob and re-mob after solution to the problem was approved.

See Case statement attached:	$ 8,482.32	
5% allowed for Milherst	$ 424.12	
	$ 8,906.44	$ 8,906.44

c Added materials:

Add No. 6 bar: 64LF @ $ .80/LF	$ 51.20	
Add concrete: 14.4 CY's @ $ 73.00/CY	$ 1,051.20	
Industrial Insulation	$ 1,145.33	
9 ea. 2" x 2' x 8' panels @ $ 12.15	$ 109.35	
Select backfill: 26.66 ton @ $ 4.75	$ 126.64	
	$ 2,483.72	
10% allowed for Milherst	$ 248.37	
	$ 2,732.09	$ 2,732.09

g. Add labor and equipment for typical crew for additional time to Install pipe with insulation.
Add 5 crew hours:

See attached worksheet	$ 2,333.20	
15% Allowed Markup	$ 349.98	
	$ 2,683.18	$ 2,683.18

TOTAL ADD $ 14,321.70

MARK J. CASE
PRESIDENT
MATTHEW J. CASE
VICE PRESIDENT

PHONES: (716) 433-5923
433-5924
FAX: (716) 433-5937

BORING CORPORATION
8585 BUNKER HILL ROAD
GASPORT, NEW YORK 14067

August 13, 2002

MILHERST CONSTRUCTION INC
2601 Millersport Hwy.
Getzville N.Y. 14068

Leroy, N.Y.
Extra's

MOBILIZATION	1867.92	$2,651.20	
EXCAVATION OF BORE PIT, ETC.	2978.84	$4,020.40	
DE-MOBILIZATION	2,864.44	$3,437.44	
	7,711.20	$10,109.04	
10% ~~15%~~ OVERHEAD & PROFIT	771.12	~~$ 1,516.36~~ $1,516.36	1,010.91
	8,482.32	~~$11,625.40~~	11,119.95

Checked 9/6/2002
OK CFL

CASE BORING CORP

TIME & MATERIAL

	DATE	8/13/02		CHANGE ORDER #	LEROY		
				JOB NUMBER	EXTRA'S		
LABOR CLASSIFICATION	# units	RATE	x units	STRAIGHT	TIME/ 1/2	DOUBLE	TOTAL
OPERATOR	1	$52.57	$52.57	8			$420.56
LABORER	2	$43.30	$86.60	8			$692.80
TEAMSTER	1	$40.56	$40.56	8			$324.48
		$35.92	$0.00				$0.00
			$0.00				$0.00
			$0.00				$0.00
			$0.00				$0.00
			$0.00				$0.00
					TOTAL LABOR		$1,437.84
EQUIPMENT							
BACKHOE		$22.00	$0.00				$0.00
CREWTRUCK		$12.00	$0.00				$0.00
DUMP TRUCK		$16.00	$0.00				$0.00
185 COMPRESSOR		$14.00	$0.00				$0.00
PICK UP	1	$6.00	$6.00	8			$48.00
PAVEMENT BREAKER		$5.00	$0.00				$0.00
GENERATOR		$6.00	$0.00				$0.00
750 COMPRESSOR		$28.13	$0.00				$0.00
LOW-BED & TRACTOR		$45.00	$0.00				$0.00
TRACTOR & TRAILER	1	$40.00	$40.00	8			$320.00
LOADER		$16.00	$0.00				$0.00
FUSSION MACH.		$12.00	$0.00				$0.00
PIPE TRUCK		$28.00	$0.00				$0.00
WELDING TRUCK	1	$16.00	$16.00	8			$128.00
850 DOZER		$40.00	$0.00				$0.00
225 CAT EXCAVATER	1	$65.00	$65.00	8			$520.00
UTI DIRECTIONAL DRILL		$107.85	$0.00				$0.00
TRENCH BOX 8 x 20	1	50/DAY	50/DAY	0.5			$25.00
BORING MACH & EQUIPM	1	$1000/DAY	$1000/DAY	0.5			$500.00
THUMPER (KOLASS)		$47.00	$0.00				$0.00
TOOL TRUCK		$10.00	$0.00				$0.00
E-70		$40.00	$0.00				$0.00
			$0.00				
			$0.00				
			$0.00				

			$0.00		
			$0.00		
			$0.00		
			$0.00		
				TOTAL EQUIPMENT	$1,541.00
				GRAND TOTAL	$2,978.84

CASE BORING CORP

TIME & MATERIAL

DATE 8/13/02 CHANGE ORDER # LEROY

JOB NUMBER EXTRA'S

LABOR CLASSIFICATION	# units	RATE	x units	STRAIGHT	TIME/ 1/2	DOUBLE	TOTAL
OPERATOR	1	$52.57	$52.57	8			$420.56
LABORER	1	$43.30	$43.30	8			$346.40
TEAMSTER	1	$40.56	$40.56	8			$324.48
		$35.92	$0.00				$0.00
			$0.00				$0.00
			$0.00				$0.00
			$0.00				$0.00
			$0.00				$0.00
					TOTAL LABOR		$1,091.44
EQUIPMENT							
BACKHOE		$22.00	$0.00				$0.00
CREWTRUCK		$12.00	$0.00				$0.00
DUMP TRUCK		$16.00	$0.00				$0.00
185 COMPRESSOR		$14.00	$0.00				$0.00
PICK UP	1	$6.00	$6.00	8			$48.00
PAVEMENT BREAKER		$5.00	$0.00				$0.00
GENERATOR		$6.00	$0.00				$0.00
750 COMPRESSOR		$28.13	$0.00				$0.00
LOW-BED & TRACTOR	1	$45.00	$45.00	8			$360.00
TRACTOR & TRAILER	1	$40.00	$40.00	8			$320.00
LOADER		$16.00	$0.00				$0.00
FUSSION MACH.		$12.00	$0.00				$0.00
PIPE TRUCK		$28.00	$0.00				$0.00
WELDING TRUCK		$16.00	$0.00				$0.00
850 DOZER		$40.00	$0.00				$0.00
225 CAT EXCAVATER	1	$65.00	$65.00	8			$520.00
UTI DIRECTIONAL DRILL		$107.85	$0.00				$0.00
TRENCH BOX 8 x 20	1	50/DAY	50/DAY	0.5			$25.00
BORING MACH & EQUIPM	1	$1000/DAY	$1000/DAY	0.5			$500.00
THUMPER (KOLASS)		$47.00	$0.00				$0.00
TOOL TRUCK		$10.00	$0.00				$0.00
E-70		$40.00	$0.00				$0.00
			$0.00				
			$0.00				
			$0.00				

			$0.00			
			$0.00			
			$0.00			
			$0.00			
					TOTAL EQUIPMENT	$1,773.00
					GRAND TOTAL	$2,864.44

CASE BORING CORP

TIME & MATERIAL

DATE	8/13/02		CHANGE ORDER #	LEROY	
			JOB NUMBER	EXTRA'S	

LABOR CLASSIFICATION	# units	RATE	x units	STRAIGHT	TIME/ 1/2	DOUBLE	TOTAL
OPERATOR	1	$52.57	$52.57	8			$420.56
LABORER	1	$43.30	$43.30	8			$346.40
TEAMSTER	1	$40.56	$40.56	8			$324.48
		$35.92	$0.00				$0.00
			$0.00				$0.00
			$0.00				$0.00
			$0.00				$0.00
			$0.00				$0.00
					TOTAL LABOR		$1,091.44
EQUIPMENT							
BACKHOE		$22.00	$0.00				$0.00
CREWTRUCK		$12.00	$0.00				$0.00
DUMP TRUCK		$16.00	$0.00				$0.00
185 COMPRESSOR		$14.00	$0.00				$0.00
PICK UP	1	$6.00	$6.00	8			$48.00
PAVEMENT BREAKER		$5.00	$0.00				$0.00
GENERATOR		$6.00	$0.00				$0.00
750 COMPRESSOR		$28.13	$0.00				$0.00
LOW-BED & TRACTOR	1	$45.00	$45.00	8			$360.00
TRACTOR & TRAILER	1	$40.00	$40.00	8			$320.00
LOADER		$16.00	$0.00				$0.00
FUSSION MACH.		$12.00	$0.00				$0.00
PIPE TRUCK		$28.00	$0.00				$0.00
WELDING TRUCK		$16.00	$0.00				$0.00
850 DOZER		$40.00	$0.00				$0.00
225 CAT EXCAVATER	1	$65.00	$65.00	8			$520.00
UTI DIRECTIONAL DRILL		$107.85	$0.00				$0.00
TRENCH BOX 8 x 20	1	50/DAY	50/DAY	0.5			$25.00
BORING MACH & EQUIPM	1	$1000/DAY	$1000/DAY	0.5			$500.00
THUMPER (KOLASS)		$47.00	$0.00				$0.00
TOOL TRUCK		$10.00	$0.00				$0.00
E-70		$40.00	$0.00				$0.00
			$0.00				
			$0.00				
			$0.00				

			$0.00			
			$0.00			
			$0.00			
			$0.00			
					TOTAL EQUIPMENT	$1,773.00
					GRAND TOTAL	$2,864.44

INDUSTRIAL INSULATION SALES, INC.

INDUSTRIAL INSULATION SALES INC
3101 KENMORE AVENUE
BUFFALO NY 14207
716-874-7979
FAX 716-871-7499

DISTRIBUTORS OF INSULATION MATERIALS AND ACCESSORIES
Energy Conservation ✦ Personnel Protection ✦ Process Control ✦ Noise Reduction
Refrigeration ✦ Refractory ✦ Underground ✦ Cryogenic
Condensation Control ✦ Fire Stopping

INVOICE NO
107317

INVOICE DATE
08/23/2002

TERMS
2% 10 NET 30

MILHERST CONSTRUCTION
2601 MILLERSPORT HIGHWAY
GETZVILLE NY 14068-0431

AUG 28 2002

MILHERST CONSTRUCTION
ATTN CHAD KUBINIEC

R1244072

Taxable	Ship Date	Customer P.O. No.	Ship Via	PPD or COLL	Cust #
08/13/2002	09/27/2002	MILHERST 01136	VENDOR DELIVERY	PREPAY	M095

Ordered	Shipped	Description		Unit Price	Amount
28	28	DCMISC UNITS: EA	8"DUCT X 3"TX ROOMSIDE PLAIN SIDE COVERING	18.4300	516.04
33	33	DISMH1615D UNITS: LF	15.0"OD C&C.016 SM ALUM W/HEM	3.2100	105.93
2	2	DCMISC UNITS: EA	15" X 3TX ROOMSIDE WELD 45 DEGREE W/ 1A EXTENSIONS	142.3000	284.60
2	2	DCMISC UNITS: EA	15" X 3"TX ALUM 45 DEGREE #19	37.9800	75.96
4	4	DCMISC UNITS: EA	15" X 3"TX ALUM END CAP	40.2000	160.80

CFK
01126

FS: YOU MAY DEDUCT 22.91
IF PAID BY 09/02/2002

SUBTOTAL	SALES TAX	SHIPPING	TOTAL
1,145.33	0.00	0.00	1,145.33

INVOICE CHARGE OF 1-1/2% PER MONTH (18% ANNUM) WILL BE CHARGED ON PAST DUE BALANC
REVERSE SIDE FOR TERMS & CONDITIONS OF SALE.

Job 01126 **Date:** 9/16/02 11:49
Item # Typical 8" Pipe Crew Cost
Job Name: Lehigh Valley RR Derailment Site Water Line Project
Descrip: Add insulation to 8" DIP, add thrust blocks and install over culvert on Spring Street
Bid Qty: 1 LS

PRODUCTION TABLE

Hours/Day	8
Days	0.625
Qty/Day	1.6

Total Item Cost>>>>>>>> $ 2,333.20
Total Item Unit Cost>>>>> $ 2,333.20
Check $ 2,333.20

Notes>>>> Add 4 crew hours for Insulation.
> Add 1 hour for addition concrete.
>
>

Labor Rate >	Foreman	Laborer	Operator	Driver	Skilled Labor
ST>	$ 49.45	$ 36.03	$ 48.27	$ 31.51	$ 36.85
OT>	$ 74.18	$ 54.05	$ 72.41	$ 47.27	$ 55.28

MATERIALS

Materials:	Qty	U	U/Price	Extension
None				$ -
				$ -
				$ -
				$ -
				$ -
				$ -
				$ -
				$ -
				$ -
				$ -
				$ -
				$ -
				$ -
				$ -
UNIT PRICES:				
DIVIDE BY BID QTY:	1			$ -

LABOR

Labor		
1 F ST	$	395.60
2 Sk.L	$	589.60
2 OP ST	$	772.32
2 Dr ST	$	504.16
1 Flagger	$	288.24
1 F OT	$	-
2 SkL OT	$	-
2 OP OT	$	-
2 Dr OT	$	-
1 Lab OT	$	-
Daily Cost	$	2,549.92
Days		0.63
ST Labor	$	1,593.70
	$	**1,593.70**

EQUIPMENT

Equipment		Rate		Extension
1 Pickup	$	7.00	$	56.00
1 Crew Tr	$	9.00	$	72.00
1 Cat 325 BL	$	41.80	$	334.40
1 Loader	$	34.10	$	272.80
2 Tandems	$	28.00	$	448.00
			$	-
			$	-
			$	-
			$	-
			$	-
			$	-
Daily Cost	$	1,183.20		
Days				0.63
ST Equip.	$	739.50		
			$	**739.50**

SUB CONTRACTORS

Subcontractors	Quantity	U	Unit Price	Extension
				$ -
				$ -
				$ -
				$ -
				$ -
				$ -
				$ -
				$ -
				$ -
				$ -
				$ -
				$ -
				$ -
				$ -
				$ -

Milherst Construction, Inc.
P.O. Box 631
Getzville, NY 14068

Phone:(716) 688-9098
Fax:(716) 688-9562

Proposed Change Order No. 2 Revision 2

Item 2 New Procedure for Well Abandonment

a. Deduct existing Item 27 65 @ $ 400.00	$	(26,000.00)
b. Add new Item 27 65 @ $ 421.00 See attached Item Worksheet for Well Abandonment	$	27,365.00
Net Change: ADD	$	1,365.00

Job 01126 **Date:** October 28, 2002
Item # Change Order 2 - Item 2
Job Name: Lehigh Valley RR Derailment Site Water Line Project
Descrip: Well abandonment Proceedure
Bid Qty: 65 EA

PRODUCTION TABLE

Hours/Day	8
Days	16
Qty/Day	4.0625

Total Item Cost>>>>>>>>	$	23,820.06
Total Item Unit Cost>>>>>	$	366.46
Check	$	366.46
Add 15% Markup	$	54.97
Cost	$	421.43
Quote	$	421.00

Notes>>>> Estimate 2 hrs. per well
> 130 Hrs.
> Estimate 16 Days
>

Labor Rate >	Foreman	Laborer	Operator	Driver	Skilled Labor
ST>	$ 49.45	$ 36.03	$ 48.27	$ 31.51	$ 36.85
OT>	$ 74.18	$ 54.05	$ 72.41	$ 47.27	$ 55.28

MATERIALS

Materials:	Qty	U	U/Price		Extension
Cap for casing	65	ea	5.00	$	325.00
Concrete	195	Bags	4.10	$	799.50
Plug for basement	65	ea	5.00	$	325.00
				$	-
				$	-
				$	-
				$	-
				$	-
				$	-
				$	-
				$	-
				$	-
				$	-
				$	1,449.50

UNIT PRICES:
DIVIDE BY BID QTY: 65 **$ 22.30**

LABOR

Labor		
1 F ST	$	395.60
1 Sk.L	$	294.80
1 OP ST	$	386.16
0 Dr ST	$	-
0 Flagger	$	-
1 F OT	$	-
1 SkL OT	$	-
1 OP OT	$	-
0 Dr OT	$	-
0 Lab OT	$	-
Daily Cost	$	1,076.56
Days		16.00
ST Labor	$	17,224.96
	$	**265.00**

EQUIPMENT

Equipment		Rate		Extension
1 Pickup	$	7.00	$	56.00
1 Crew Tr	$	9.00	$	72.00
1 Ford 555	$	24.20	$	193.60
			$	-
			$	-
			$	-
			$	-
			$	-
			$	-
			$	-
			$	-
Daily Cost	$	321.60		
Days		16.00		
ST Equip.	$	5,145.60		
			$	**79.16**

SUB CONTRACTORS

Subcontractors	Quantity	U	Unit Price	Extension
				$ -
				$ -
				$ -
				$ -
				$ -
				$ -
				$ -
				$ -
				$ -
				$ -
				$ -
				$ -
				$ -
				$ -
				$ -
				$ -
				$ -
				$ -
				$ -
				$ -
				$ -

Credit Booster CF

MILHERST CONSTRUCTION INC.
P.O. Box 631
Getzville, NY 14068

Date: October 28, 2002
Subj: Booster Chlorination Facility

Job: Water Distribution System — Lehigh Valley RR Derailment Site
NYSDEC Contract D004327 — Milherst Job Number 01126

The credit offered by Milherst for the deletion of the Booster Chlorination Facility fell far short of the credit expected by Stearns & Wheeler.

I went back to my original estimate work sheets and identified every cost in Item 34 (Valve vault with chlorine booster) that was not included in Item 33 (Valve vault on George Street). The difference was the $ 4,385.44 credit offered September 16, 2002.

This new offer still did not meet expectations.

The reason is that Milherst took Item F. of Addendum Number 2 to mean that all booster equipment would be paid under Item 36 - the Monroe County Water Authority Allowance Item. (see attached) Not just the control Panel. In effect our original bid covered the cost for the booster chlorination structure and equipment under Item 36 not Item 34.

Thus, the only added items we included in our estimate was for a concrete pad for the booster equipment, an electric allowance to power it up, misc. parts to connect the booster equipment provided under Item 36, and one additional day of the crew to install same.

Attached please find a copy of the original item worksheets for Item 33 and Item 34. This documents the credit offer of $ 4,385.44

Since the Contract allows a markup of 15% for additional work, it is only fair that I add 15% to the cost documented above for a revised credit offer of $ 5,043.26.

Phone: (716) 688-9098
Fax: (716) 688-9562
chip@milherst.com

Estimate : 3343 **Date:** 8/28/01 11:01
Item # 34
Job Name: Lehigh Valley RR Derailment Site Water Line Project
Descrip: Pressure Reducing Vault B
Bid Qty: 1 ea

PRODUCTION TABLE

Hours/Day	8
Days	4
Qty/Day	0.25

Total Item Cost>>>>>>>> $ 29,697.26
Total Item Unit Cost>>>>> $ 29,697.26
Check $ 29,697.26

Notes>>>>
>
>
>

Labor Rate >	Foreman	Laborer	Operator	Driver	Skilled Labor
ST>	$ 47.34	$ 34.59	$ 46.22	$ 30.36	$ 35.37
OT>	$ 71.01	$ 51.89	$ 69.33	$ 45.54	$ 53.06

MATERIALS

Materials:	Qty	U	U/Price	Extension
Pre-cast Complete	1	ls	######	$ 8,336.00
See LCS	1	ls	######	$ 8,474.50
				$ -
				$ -
				$ -
				$ -
				$ -
Candy Can	1	ea	75.00	$ 75.00
Stone	3	ton	10.00	$ 30.00
Harness Ears & Rods	4	ea	10.00	$ 40.00
Misc. for Chlor.	1	ls	500.00	$ 500.00
				$ -
				$ -
				$ 17,455.50

UNIT PRICES:
DIVIDE BY BID QTY: 1 ########

LABOR

Labor		
1	F ST	$ 378.72
1	Sk.L	$ 282.96
1	OP ST	$ 369.76
0	Dr ST	$ -
0	Laborer	$ -
1	F OT	$ -
1	SkL OT	$ -
1	OP OT	$ -
0	Dr OT	$ -
0	Lab OT	$ -
Daily Cost		$ 1,031.44
Days		4.00
ST Labor		$ 4,125.76

$ 4,125.76

EQUIPMENT

Equipment		Rate	Extension
1	Pick up	$ 6.25	$ 50.00
1	Crew Truck	$ 8.00	$ 64.00
			$ -
1	Cat 325	$ 30.00	$ 240.00
			$ -
			$ -
			$ -
			$ -
			$ -
			$ -
			$ -
Daily Cost			$ 354.00
Days			4.00
ST Equip.			$ 1,416.00

########

SUB CONTRACTORS

Subcontractors	Quantity	U	Unit Price	Extension
Anti Float Collar	1	ea	400.00	$ 400.00
Rock trench	1	ls	3,000.00	$ 3,000.00
Picker	1	ls	800.00	$ 800.00
Pad for Chlor.	1	ls	1,000.00	$ 1,000.00
Electrical Allow	1	ls	1,500.00	$ 1,500.00
				$ -
				$ -
				$ -
				$ -
				$ -
				$ -
				$ -
				$ -
				$ -
				$ 6,700.00

$ 6,700.00

Electric Allow 1,500 co
Pad for Chlor 1,000 co
Misc. for Chlor 500 co
L+E (1,031.44 + 354.00) = 1,385.44

4,385.44 / 4,385.44 + 3,000 1031.44 354.00 4385.44

Estimate i 3343 **Date:** 8/28/01 11:02
Item # 33
Job Name: Lehigh Valley RR Derailment Site Water Line Project
Descrip: Pressure Reducing Vault A
Bid Qty: 1 ea

PRODUCTION TABLE

Hours/Day	8
Days	3
Qty/Day	0.33333333

Total Item Cost>>>>>>>> $ 22,992.32
Total Item Unit Cost>>>>> $ 22,992.32
Check $ 22,992.32

Notes>>>>
>
>
>

Labor Rate >	Foreman	Laborer	Operator	Driver	Skilled Labor
ST>	$ 47.34	$ 34.59	$ 46.22	$ 30.36	$ 35.37
OT>	$ 71.01	$ 51.89	$ 69.33	$ 45.54	$ 53.06

MATERIALS

Materials:	Qty	U	U/Price	Extension
Pre-cast Complete	1	ls	######	$ 8,336.00
See LCS	1	ls	######	$ 6,155.00
				$ -
				$ -
				$ -
				$ -
				$ -
Candy Can	1	ea	75.00	$ 75.00
Stone	3	ton	10.00	$ 30.00
Harness Ears & Rods	4	ea	10.00	$ 40.00
				$ -
				$ -
				$ -
				$ 14,636.00

UNIT PRICES:
DIVIDE BY BID QTY: 1 ########

LABOR

Labor		
1 F ST	$	378.72
1 Sk.L	$	282.96
1 OP ST	$	369.76
0 Dr ST	$	-
0 Laborer	$	-
1 F OT	$	-
1 SkL OT	$	-
1 OP OT	$	-
0 Dr OT	$	-
0 Lab OT	$	-
Daily Cost	$	1,031.44
Days		3.00
ST Labor	$	3,094.32
		$ 3,094.32

EQUIPMENT

Equipment		Rate		Extension
1 Pick up	$	6.25	$	50.00
1 Crew Truck	$	8.00	$	64.00
			$	-
1 Cat 325	$	30.00	$	240.00
			$	-
			$	-
			$	-
			$	-
			$	-
			$	-
			$	-
Daily Cost			$	354.00
Days				3.00
ST Equip.			$	1,062.00
				########

SUB CONTRACTORS

Subcontractors	Quantity	U	Unit Price	Extension
Anti Float Collar	1	ea	400.00	$ 400.00
Rock trench	1	ls	3,000.00	$ 3,000.00
Picker	1	ls	800.00	$ 800.00
				$ -
				$ -
				$ -
				$ -
				$ -
				$ -
				$ -
				$ -
				$ -
				$ -
				$ 4,200.00
				$ 4,200.00

F. Bid Item 34.

1. Paragraph B. Change last entry on first page to: "Furnish and Install Chlorination System Control Panel, Supplied by Monroe County Water Authority, Paid for Under Bid Item 36 (Contract Drawings)."

2. Paragraph B, second page. Delete: "Pay For All Costs of MCWA Supplied Equipment (Contract Drawings)."

G. Add new Bid Items 36 and 37, attached.

Contract Drawings

A. Sheet G-28, Type "B" Support. Add note: "All materials for pipe support shall be stainless steel, Type 316."

Meeting Minutes

The attached meeting minutes from the pre-bid conference of August 8, 2001, along with significant questions that have been received by the Department and its Engineer and the associated answers and clarifications, hereby become part of the Contract Documents.

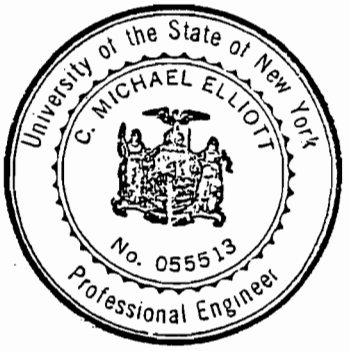

C. Michael Elliott, P.E.

Milherst Construction, Inc.

2601 MILLERSPORT HWY.
P.O. BOX 631
GETZVILLE, NY 14068-0631
PHONE: (716) 688-9098 • FAX: (716) 688-9562

October 29, 2002

Titus Falkenburg, P.E.
Stearns & Wheler, LLC
One Remington Park Drive
Cazenovia, NY 13035

Re: Proposal to add Thrust Blocks at Circular Hill Road
Water Distribution System
NYSDEC – Contract No. D004327

Gentlemen:

We propose to furnish all supervision, material, labor and equipment required to install 3 additional vertical thrust blocks for the lump sum of ~~$3,726.00~~ 3,684.00.

The breakdown of this cost is as follows:

1.Materials		~~$ 834.30~~	$ 917.73
2. Labor		~~$ 1,757.52~~	2,021.15
3. Equipment		~~$ 648.00~~	745.20
	Total Cost	$ 3,239.82	
~~Add 15% for overhead and profit~~ See worksheet attached 3,684.00		~~485.97~~	
	Total	$ 3,725.79	3,684.08

Round to: ~~$ 3,726.00~~ Lump Sum

Please call if you have a question.

Received 11-13-02 CFK

Very truly yours,
Milherst Construction, Inc.

By Charles F. Kubiniec
Charles F. Kubiniec
Project Manager

Job 01126 **Date:** October 29, 2002
Item # Change Order 2 - Item 4
Job Name: Lehigh Valley RR Derailment Site Water Line Project
Descrip: 3 Additional thurst blocks at Circular Hill
Bid Qty: 1 LS

PRODUCTION TABLE

Hours/Day	8
Days	1.5
Qty/Day	0.666666667

Total Item Cost>>>>>>>>	$ 3,239.82
~~15% Overhead & profit~~	~~$ 485.97~~
~~See below~~	~~$ 3,725.79~~
~~Round to>>>>>>>>>>>>>>~~	~~$ 3,726.00~~

Revised 11-13-02 CFK

Notes>>>>
> Need flagman for 1 fo 3 locations (Rt 5)
> Laborer can drive dump for haul away & stocking stone
>

Labor Rate >	Foreman	Laborer	Operator	Driver	Skilled Labor
ST>	$ 49.45	$ 36.03	$ 48.27	$ 31.51	$ 36.85
OT>	$ 74.18	$ 54.05	$ 72.41	$ 47.27	$ 55.28

MATERIALS

Materials:	Qty	U	U/Price		Extension
No 6 bar	18	LF	0.80	$	14.40
Concrete 3@3.6 CY's	10.8	CY	73.00	$	788.40
Non shrink grout	3	Bags	10.50	$	31.50
				$	-
				$	-
				$	-
				$	-
				$	-
				$	-
				$	-
				$	-
				$	-
				$	-
				$	834.30
UNIT PRICES:					
DIVIDE BY BID QTY:	1			$	**834.30**

+10% 83.43 = 917.73

LABOR

Labor			
1	F ST	$	395.60
1	Sk.L	$	294.80
1	OP ST	$	386.16
0	Dr ST	$	-
0.33	Flagger	$	95.12
1	F OT	$	-
1	SkL OT	$	-
1	OP OT	$	-
0	Dr OT	$	-
0.33	Lab OT	$	-
			=========
Daily Cost		$	1,171.68
Days			1.50
ST Labor		$	1,757.52
			$ 1,757.52

+15% 263.63 = 2,021.15

EQUIPMENT

Equipment		Rate		Extension
1	Pickup	$	7.00	$ 56.00
1	Crew Tr	$	9.00	$ 72.00
1	Cat 312B	$	27.00	$ 216.00
1	Sm Dump	$	11.00	$ 88.00
				$ -
				$ -
				$ -
				$ -
				$ -
				$ -
				$ -
				=========
Daily Cost				$ 432.00
Days				1.50
ST Equip.				$ 648.00
				$ 648.00

+15% 97.20 = 745.20

SUB CONTRACTORS

Subcontractors	Quantity	U	Unit Price	Extension
				$ -
				$ -
				$ -
				$ -
				$ -
				$ -
				$ -
				$ -
				$ -
				$ -
				$ -
				$ -
				$ -
				$ -
				$ -
				$ -

Milherst Construction, Inc.

2601 MILLERSPORT HWY.
P.O. BOX 631
GETZVILLE, NY 14068-0631
PHONE: (716) 688-9098 • FAX: (716) 688-9562

October 15, 2002

Titus Falkenburg, P.E.
Stearns & Wheler, LLC
One Remington Park Drive
Cazenovia, NY 13035

Re: Proposal to add 17 Bollards
Water Distribution System
NYSDEC – Contract No. D004327

Gentlemen:

We propose to furnish all supervision, material, labor and equipment required to install additional bollards per detail on sheet G9 for the lump sum of $ 303.00 each.

The breakdown of this cost is as follows:

1.Materials		$ 106.00
2. Labor		$ 155.00
3. Equipment		$ 42.00
	Total	$ 303.00

17 bollards @ $ 303.00 = $ 5,151.00

Please call if you have a question.

Very truly yours,
Milherst Construction, Inc.

By Charles F. Kubiniec
Charles F. Kubiniec
Project Manager

cc: Michael Cruden

MILHERST CONSTRUCTION, INC
PHONE: (716) 688-9098
FAX: (716) 688-9562

FACSIMILE TRANSMITTAL SHEET

TO: Titus Falkenburg	FROM: Chip Kubiniec
COMPANY: Stearns & Wheeler	DATE: 12/13/02
FAX NUMBER: 315 655-4180	TOTAL NO. OF PAGES INCLUDING COVER: 6
PHONE NUMBER: 315 655-8161	SENDER'S REFERENCE NUMBER: Milherst Job 01126
RE: T&M Carbon Filter to Dolomite	YOUR REFERENCE NUMBER: Contract D 004327

☒ URGENT ☒ FOR REVIEW ☐ PLEASE COMMENT ☐ PLEASE REPLY ☐ PLEASE RECYCLE

Attached please find: Summary breakdown of Cost for added work.
Field notes from 11/19/02
Field notes from 12/3/02
Field notes from 12/4/02
Field notes from 12/5/02

We request your review and approval.

If OK as submitted, we request this be added to CO No. 2 and CO No. 2 be finalized etc.

If NOT OK, please call and review over the phone…I'll make adjustments and re-submit.

Thanks for your cooperation,

Chip Charles J. Kubiniec Jr.

2601 MILLERSPORT HIGHWAY P.O.BOX 631 GETZVILLE, NY 14068-0631

Milherst Construction, Inc.
PO Box 631
Getzville, NY 14068-0631

12/13/02

Job Reference: Water Distribution System
Lehigh Valley Railroad Derailment Site
Milherst Job 01126

Topic: Move and install Carbon Filter System from Genesee Campground to Dolomite Quarry on Gulf Road.
Summary of Time and Material

Dates:					
Labor:	**11/19/02**	**12/3/02**	**12/4/02**	**12/5/02**	**Total Hrs.**
Foreman:	2	1	9	4	16
Laborer	4		9		13
Operator	2				2
Driver	0				0
Equipment:					
Pick Up	2	1	9	4	16
Crew Truck with Tools	2				2
Cat 928 Loader	2				2

Materials:	Qty	Unit	Unit Price	Total		
1" Close cell foam	48	LF	$ 0.34	$ 16.32		
1" Tee	1	EA	$ 2.10	$ 2.10		
1" 90 Elbow	8	EA	$ 1.65	$ 13.20		
1" 45 Elbow	2	EA	$ 1.65	$ 3.30		
1" 90 Male Adapter	2	EA	$ 1.85	$ 3.70		
1" Male Adapter	2	EA	$ 1.35	$ 2.70		
1" Ball Valve	1	EA	$ 7.00	$ 7.00		
1" Type L Copper	41	LF	$ 0.99	$ 40.59		
				$ 88.91		
Overhead & profit allowed			10%	$ 8.89		
					$	97.80

Cost Data:Labor	Qty	Unit	Unit Price	Total		
Foreman ST	15	Hrs.	$ 49.45	$ 741.75		
Foreman OT	1	Hrs.	$ 74.18	$ 74.18		
Laborer ST	12	Hrs.	$ 36.03	$ 432.36		
Laborer OT	1	Hrs.	$ 54.05	$ 54.05		
Operator	2	Hrs.	$ 48.27	$ 96.54		
				$ 1,398.88		
Overhead & profit allowed			15%	$ 209.83		
					$	1,608.71

Cost Data:Equip.	Qty	Unit	Unit Price	Total		
Pick up	16	Hrs.	$ 7.00	$ 112.00		
Crew truck with tools	2	Hrs.	$ 9.00	$ 18.00		
Cat 928 Loader	2	Hrs.	$ 34.10	$ 68.20		
				$ 198.20		
Overhead & profit allowed			15%	$ 29.73		
					$	227.93

Grand Total >>>>>>>>>>>>>>>>>> $ 1,934.44

By:CFK
TM Carbon Filter

MILHERST CONSTRUCTION, INC.

2601 Millersport Highway
Getzville, New York 14068
(716) 688-9098

DATE 12-3-02
PROJECT LEHIGH VALLEY WATER
LOCATION IN OF LEROY
CONTRACTOR MCT
FOREMAN CARL
WEATHER COLD 0° - TEENS
SAFETY Personal Injury? Yes ___ No X
Utility Damage? Yes ___ No X

PRESENT AT SITE

MARK G.

COMMENTS PIONEER BEAGLE CLUB
FLINT HILL RD
Item# 12A = 1 EA 5/8" METER
Item# 29 = 1 EA 1" PRES. RED VALVE.
NOTE: PULLED PUMP ASSEMBLY AND CAPPED LINES

CLEAR OFF SNOW AT WORK AREAS AND DUMP SITE

I & M: WENT TO DOLOMITE AND MADE LIST OF MATERIALS TO HOOK UP FILTERS
FOREMAN & TEK #3 = 1 HR

FIELD REPORT

SIGNED Carl

Also Work on 17

MILHERST CONSTRUCTION, INC.
2601 Millersport Highway
Getzville, New York 14068
(716) 688-9098

T & M

DATE 12-4-02
PROJECT LEHIGH VALLEY WATER
LOCATION TN OF LEROY
CONTRACTOR MCT
FOREMAN CARL
WEATHER COLD Teens - 20's
SAFETY Personal Injury? Yes ___ No X
Utility Damage? Yes ___ No X

PRESENT AT SITE

COMMENTS TIE IN 4 CARBON FILTERS AND UV LIGHT TO EXISTING SYSTEM.
R. BENNETT 2 = 9 hrs
CARL L. (Tek #3) = 9 hrs

MATERIALS: ALL Copper

2.10	1" Tee = 1ea
1.65	1" 90° ELs = 8 EA
1.65	1" 45° ELs = 2
1.85	1" 90° MALE ADPTERS BRASS = 2 EA
1.35	1" MALE ADPTERS = 2 EA
7.00	1" BALL VALVE 1" FT = 1 EA
99¢ /LF	1" Type L copper 41' F

FIELD REPORT

SIGNED

MILHERST CONSTRUCTION, INC.

2601 Millersport Highway
Getzville, New York 14068
(716) 688-9098

DATE 12-05-02

PROJECT LEHIGH VALLEY WATER

LOCATION TONAWANDA, CALEDONIA

CONTRACTOR M&E

FOREMAN CARL

WEATHER COLD 20s

SAFETY Personal Injury? Yes ___ No X

Utility Damage? Yes ___ No X

PRESENT AT SITE

MARK

COMMENTS T&M = DOLOMITE PIT

INSULATE CARLL, TRK#3 = 4½ HRS

MATERIALS = 48'F 1" CLOSE CELL FOAM

GUNSMOKE SALOON

Item# 9B = 120'F OF 1½ COPPER

8pcs @ 6' long = 48 LF

2.00 per piece ÷ 6' = 34¢ /LF

FIELD REPORT

SIGNED

MILLHERST CONSTRUCTION, INC.

2601 Millersport Highway

Getzville, New York 14068

(716) 688-9098

DATE November 19th 2002

PROJECT Lehigh Valley Water

LOCATION Town of LeRoy

CONTRACTOR Millherst Const. Inc.

FOREMAN Carl Linnan

WEATHER OK

SAFETY Personal Injury? Yes ___ No ✓

Utility Damage? Yes ___ No ✓

PRESENT AT SITE T & M

Mark G

COMMENTS Move bank of carbon filters from Camp Ground on Limerock to Dolomite.

Operator 2 hrs

Laborers (2) 4 hrs

Foreman 2 hrs

P/U 2 hrs

Crew Van-Tools 2 hrs

Cat 928 Loader 2 hrs.

FIELD REPORT

SIGNED

LEHIGH VALLEY RAILROAD DERAILMENT SITE
NYSDEC SITE NUMBER: 8-19-014
STATE CONTRACT NUMBER: D004327
CHANGE ORDER NUMBER: 3

Change Order Amount: ($238,005.55)

Date of Issue: August 1, 2003

Contractor: Milherst Construction, Inc.
2601 Millersport Highway
P.O. Box 631
Getzville, NY 14068-0631

Engineer: Stearns & Wheler, LLC
One Remington Park Drive
Cazenovia, NY 13035

Change Order Items: This Change Order comprises two (2) items as discussed below.

I. CHANGE ORDER ITEMS

1. TIME EXTENSION.

DESCRIPTION OF CHANGE:

Time extension for final completion (Section VI, Agreement, Article 6.3). The total time extension is for 54 days and the final completion date shall be July 18, 2003.

DRAWING REFERENCE: Not Applicable.

SPECIFICATION REFERENCE: Section VIII; 10, Change of Contract Price or Time.

CONTRACT PAY ITEM NO.: Not Applicable.

REASON FOR CHANGE:

This change order item is necessary for:

The Contractor was substantially complete on February 24, 2003 and his only remaining work was weather sensitive (i.e., topsoil, seeding, and paving).

The Contractor could not complete the remaining work due to the late winter and early spring conditions. The Department agreed to time extensions through July 18, 2003.

COST:

No associated cost.

Subtotal 1 $0

2. BID ITEMS OVER/UNDER.

DESCRIPTION OF CHANGE:

This item has balanced out the entire unit price bid items based on "final as constructed" quantities. Original unit price items were estimated for the purposes of bidding.

DRAWING REFERENCE: Not Applicable.

SPECIFICATION REFERENCE: Section VIII; 10, Change of Contract Price or Time.

CONTRACT PAY ITEM NO.: All unit price bid items.

REASON FOR CHANGE:

This change order item is necessary for:

Final wrap-up of Contract cost based on "final as constructed" quantities. All final quantities were verified in the field by the Engineer.

COST:

See attached Table 1

Subtotal 2 ($238,005.55)

II. CHANGE ORDER NUMBER 3 SUMMARY

1.	Time Extension.	$0
2.	Bid Items Over/Under	($238,005.55)
	TOTAL	**($238,005.55)**

III. CHANGE IN CONTRACT PRICE

Original Contract Price:	$6,394,855.00
Change Order No. 1	$12,040.00
Change Order No. 2	$21,412.96
Contract Price after previous approved Change Orders:	$6,428,307.96
Net Increase Due to this Change Order:	($238,005.55)
New Contract Price including this Change Order:	**$6,190,302.41**

IV. CHANGE IN CONTRACT TIME

Notice to Proceed: December 21, 2001

	SUBSTANTIAL COMPLETION		FINAL COMPLETION	
	Calendar Days	Date	Calendar Days	Date
Original Contract Time	460	March 26, 2003	520	May 25, 2003
Change Order No. 1	0	---	0	---
Change Order No. 2	0	---	0	---
Contract Time after previous Change Orders	460	March 26, 2002	520	May 25, 2003
Net Increase due to this Change Order	0	March 26, 2003	54	July 18, 2003
New Contract Time including this Change Order	**460**	**March 26, 2003**	**574**	**July 18, 2003**

It is understood and agreed that, unless expressly so stated above, the work herein authorized will not extend the time for completion of the Contract.

It is understood and agreed that this change order represents full and complete compensation for all work described herein.

This work is to be performed in accordance with the terms of the Contract and original plans and specifications, except as herein modified. It is also understood and agreed that this change order shall be deemed executory only to the extent of moneys available and no liability shall be incurred by the State beyond the moneys available for the purpose.

CONTRACT NO. **D004327**

(continued)

IN WITNESS WHEREOF, representatives of the Department and Contractor have executed this contract on the day and year written beneath their respective signatures. The signatory for the Department provides the following Agency Certification: "In addition to the acceptance of this contract, I also certify that original copies of this signature page will be attached to all other exact copies of this contract."

Recommended:

By:_____

Title:_____

Date:_____

FOR DEPARTMENT

By:_____

Title:_____

Date:_____

FOR ENGINEER

By:_____
C. Michael Elliott, P.E.

Title: Principal

Date: 8/14/03

FOR CONTRACTOR

By:_____

Title:_____

Date:_____

Approved as to Form:

By:_____
Attorney General

Date:_____

Approved:

By:_____
State Comptroller

Date:_____

STATE OF)
) SS:
COUNTY OF)

On the ___ day of _____, 20__, before me personally came _____, to me known, who being duly sworn, did depose and say that (s)he resides in _____, New York; that (s)he is _____ of _____, the corporation described in and which executed the above instrument; that (s)he knows the seal of said corporation; that the seal affixed to said instrument is such corporate seal; that it was so affixed by authority of the Board of Directors of said corporation and that (s)he signed his/her name thereto by the same authority.

_____
Notary Public

STATE OF)
) SS:
COUNTY OF)

On the ___ day of _____, 20__, before me personally came _____, to me known, who being duly sworn, did depose and say that (s)he resides in _____, New York; that (s)he is _____ of _____, the corporation described in and which executed the above instrument; that (s)he knows the seal of said corporation; that the seal affixed to said instrument is such corporate seal; that it was so affixed by authority of the Board of Directors of said corporation and that (s)he signed his/her name thereto by the same authority.

_____
Notary Public

STATE OF NEW YORK)
) SS:
COUNTY OF MADISON)

On the 14th day of August, 2003, before me personally came C. MICHAEL ELLIOTT, to me known and, who being duly sworn, stated that he is a PRINCIPAL of STEARNS & WHELER, LLC, the firm described in and which executed the foregoing instrument, and he acknowledged to me that he subscribed his name thereto on behalf of said firm.

Notary Public
JUDITH F. SUTHERLAND
Notary Public in the State of New York
Appointed in Madison Co. No. 4770407
My Commission Expires March 30, 2006

STATE OF)
) SS:
COUNTY OF)

On the __ day of _____, 20___, before me personally came _____ to me known and, who being duly sworn, stated that he is a member or employee of _____, the firm described in and which executed the foregoing instrument, and (s)he acknowledged to me that he subscribed his name thereto on behalf of said firm.

Notary Public

STATE OF)
) SS:
COUNTY OF)

On the ___ day of _____, 20___, before me personally came _____
_____, to me known and, known to me to be the individual described in, and who executed the foregoing instrument, and (s)he duly acknowledged to me that (s)he executed the same.

_____
Notary Public

STATE OF)
) SS:
COUNTY OF)

On the ___ day of _____, 20___, before me personally came _____
_____, to me known and, known to me to be the individual described in, and who executed the foregoing instrument, and (s)he duly acknowledged to me that (s)he executed the same.

_____
Notary Public

Table 1

Lehigh Valley Railroad Derailment Site
NYSDEC Site Number: 8-19-014
NYSDEC Contract Number: D004327
Change Order No. 3

Item No.	Type of Work	Unit Price	Estimated Quantity	Contract Amount	Final Quantity	Final Amount	Cost Difference	Bid Item Difference	Percentage Used	Explanation for Items whose total cost changed by over $30,000 **and** differs by more then 15% of the estimated original quantity.
1	LS Mobilization	$ 194,000.00	1	$ 194,000.00	1.00	$ 194,000.00	$ -	0.00	100.00%	
2	Month/Site Services	$ 1,850.00	16	$ 29,600.00	16.00	$ 29,600.00	$ -	0.00	100.00%	
3	CY Rock Excav.	$ 0.01	33,000	$ 330.00	7,051.98	$ 70.52	$ (259.48)	(25,948.02)	21.37%	
4A	LF 4" DIP	$ 43.00	1,200	$ 51,600.00	1,060.00	$ 45,580.00	$ (6,020.00)	(140.00)	88.33%	
4B	LF 6" DIP	$ 43.00	1,100	$ 47,300.00	863.50	$ 37,130.50	$ (10,169.50)	(236.50)	78.50%	
4C-1	LF 8" DIP Interim Rock	$ 18.00	34,500	$ 621,000.00	33,333.26	$ 599,998.68	$ (21,001.32)	(1,166.74)	96.62%	
4C-2	LF 8" DIP Interim Pipe	$ 27.00	34,500	$ 931,500.00	33,333.26	$ 899,998.02	$ (31,501.98)	(1,166.74)	96.62%	
4D-1	LF 12" DIP Interim Rock	$ 18.00	42,500	$ 765,000.00	42,108.85	$ 757,959.30	$ (7,040.70)	(391.15)	99.08%	
4D-2	LF 12" DIP Interim Pipe	$ 33.00	42,500	$ 1,402,500.00	42,108.85	$ 1,389,592.05	$ (12,907.95)	(391.15)	99.08%	
5	LBS. Fittings	$ 2.50	12,000	$ 30,000.00	11,807.00	$ 29,517.50	$ (482.50)	(193.00)	98.39%	
6A	EA 4" Gate Valves	$ 300.00	7	$ 2,100.00	7.00	$ 2,100.00	$ -	0.00	100.00%	
6B	EA 6" Gate Valves	$ 400.00	3	$ 1,200.00	4.00	$ 1,600.00	$ 400.00	1.00	133.33%	
6C	EA 8" Gate Valves	$ 600.00	75	$ 45,000.00	71.00	$ 42,600.00	$ (2,400.00)	(4.00)	94.67%	
6D	EA 12" Gate Valves	$ 1,000.00	70	$ 70,000.00	67.00	$ 67,000.00	$ (3,000.00)	(3.00)	95.71%	
7A	EA Hyd. Install Perp.	$ 2,600.00	80	$ 208,000.00	121.00	$ 314,600.00	$ 106,600.00	41.00	151.25%	Able to install the less costly hydrant setup (Item 7A vs. 7B) in the majority of the roads due to existing field conditions. Total hydrants on job almost the same.
7B	EA Hyd Install Par.	$ 2,700.00	40	$ 108,000.00	1.00	$ 2,700.00	$ (105,300.00)	(39.00)	2.50%	
8A	EA 1" Corp Stop	$ 303.00	55	$ 16,665.00	47.00	$ 14,241.00	$ (2,424.00)	(8.00)	85.45%	
8B	EA 1-1/2" Corp Stop	$ 331.00	15	$ 4,965.00	13.00	$ 4,303.00	$ (662.00)	(2.00)	86.67%	
8C	EA 2" Corp Stop	$ 504.00	5	$ 2,520.00	4.00	$ 2,016.00	$ (504.00)	(1.00)	80.00%	
9A	LF 1" K Open Cut	$ 13.00	6,500	$ 84,500.00	6,798.00	$ 88,374.00	$ 3,874.00	298.00	104.58%	
9B	LF 1-1/2" K Open Cut	$ 14.00	5,000	$ 70,000.00	5,233.00	$ 73,262.00	$ 3,262.00	233.00	104.66%	
9C	LF 2" K Open Cut	$ 16.00	2,000	$ 32,000.00	1,600.50	$ 25,608.00	$ (6,392.00)	(399.50)	80.03%	
10A	LF 1" K Boring	$ 55.00	350	$ 19,250.00	970.00	$ 53,350.00	$ 34,100.00	620.00	277.14%	Item 10A - Used additional boring to avoid disturbance of residential property. 970 L.F. is still small enough quantity that there is no economy of scale reduction realized by the contractor. Borings are completed in small increments on individual properties.
10B	LF 1-1/2" K Boring	$ 65.00	150	$ 9,750.00	336.00	$ 21,840.00	$ 12,090.00	186.00	224.00%	
10C	LF 2" K Boring	$ 98.00	50	$ 4,900.00	134.50	$ 13,181.00	$ 8,281.00	84.50	269.00%	
11A	EA 1" Stop and Box	$ 322.00	60	$ 19,320.00	48.00	$ 15,456.00	$ (3,864.00)	(12.00)	80.00%	
11B	EA 1-1/2" Stop & Box	$ 350.00	15	$ 5,250.00	13.00	$ 4,550.00	$ (700.00)	(2.00)	86.67%	
11C	EA 2" Stop & Box	$ 530.00	5	$ 2,650.00	3.00	$ 1,590.00	$ (1,060.00)	(2.00)	60.00%	
12A	EA 6"Tap Sleeve & Valve	$ 3,000.00	2	$ 6,000.00	2.00	$ 6,000.00	$ -	0.00	100.00%	
12B	EA 8" Tap Sleeve & Valve	$ 6,300.00	2	$ 12,600.00	3.00	$ 18,900.00	$ 6,300.00	1.00	150.00%	
12C	EA 8" Coupling Tie In	$ 4,000.00	2	$ 8,000.00	3.00	$ 12,000.00	$ 4,000.00	1.00	150.00%	
13A	EA 5/8" Meter In Building	$ 320.00	50	$ 16,000.00	45.00	$ 14,400.00	$ (1,600.00)	(5.00)	90.00%	
13B	EA 1" Meter in Building	$ 380.00	2	$ 760.00	2.00	$ 760.00	$ -	0.00	100.00%	
14A	EA 5/8" Meter in Pit	$ 1,100.00	20	$ 22,000.00	20.00	$ 22,000.00	$ -	0.00	100.00%	
14B	EA 1" Meter in Pit	$ 1,200.00	5	$ 6,000.00	3.00	$ 3,600.00	$ (2,400.00)	(2.00)	60.00%	
14C	EA 1-1/2" Meter in MH	$ 2,800.00	1	$ 2,800.00	4.00	$ 11,200.00	$ 8,400.00	3.00	400.00%	
15	SY Temp. Pavement	$ 15.00	500	$ 7,500.00	507.50	$ 7,612.50	$ 112.50	7.50	101.50%	
16	SY Pavement Restoration	$ 31.00	1,500	$ 46,500.00	650.78	$ 20,174.18	$ (26,325.82)	(849.22)	43.39%	
17	SY Asphalt Top Course	$ 8.30	4,000	$ 33,200.00	2,889.70	$ 23,984.51	$ (9,215.49)	(1,110.30)	72.24%	
18A	SY A/C Drives & Lots	$ 19.75	800	$ 15,800.00	1,238.05	$ 24,451.49	$ 8,651.49	438.05	154.76%	
18B	SY DOT A/C Drives & Lot	$ 37.00	1,200	$ 44,400.00	1,902.61	$ 70,396.57	$ 25,996.57	702.61	158.55%	
19	SY Stone Drives & Lot	$ 2.75	5,000	$ 13,750.00	4,943.44	$ 13,594.46	$ (155.54)	(56.56)	98.87%	
20	SY Concrete SW & Drive	$ 45.00	50	$ 2,250.00	28.42	$ 1,278.90	$ (971.10)	(21.58)	56.84%	
21	LF Concrete Curbing	$ 45.00	50	$ 2,250.00	98.00	$ 4,410.00	$ 2,160.00	48.00	196.00%	
22A	LF Bore w/8" Restr. DIP	$ 575.00	475	$ 273,125.00	390.00	$ 224,250.00	$ (48,875.00)	(85.00)	82.11%	
22B	LF Bore w/12" Restr. DIP	$ 655.00	600	$ 393,000.00	616.00	$ 403,480.00	$ 10,480.00	16.00	102.67%	
23	LF Test, Flush, Chlorinate	$ 0.40	80,500	$ 32,200.00	77,305.61	$ 30,922.24	$ (1,277.76)	(3,194.39)	96.03%	
24	LF Cleanup - Site Restore	$ 3.00	82,500	$ 247,500.00	80,668.08	$ 242,004.24	$ (5,495.76)	(1,831.92)	97.78%	
25	LF Polyethylene Wrap	$ 0.50	1,500	$ 750.00	0.00	$ -	$ (750.00)	(1,500.00)	0.00%	
26A	EA 6" Viton Gaskets MJ	$ 110.00	30	$ 3,300.00	8.00	$ 880.00	$ (2,420.00)	(22.00)	26.67%	

Table 1

Lehigh Valley Railroad Derailment Site
NYSDEC Site Number: 8-19-014
NYSDEC Contract Number: D004327
Change Order No. 3

Item No.	Type of Work	Unit Price	Estimated Quantity	Contract Amount	Final Quantity	Final Amount	Cost Difference	Bid Item Difference	Percentage Used
26B	EA 8" Viton Gaskets DIP	$ 196.00	140	$ 27,440.00	50.00	$ 9,800.00	$ (17,640.00)	(90.00)	35.71%
26C	EA 8" Viton Gaskets MJ	$ 83.00	50	$ 4,150.00	13.00	$ 1,079.00	$ (3,071.00)	(37.00)	26.00%
27	EA Well decommissioning	$ 400.00	65	$ 26,000.00	60.00	$ 24,000.00	$ (2,000.00)	(5.00)	92.31%
28A	EA Dual check in Bldg.	$ 33.00	30	$ 990.00	17.00	$ 561.00	$ (429.00)	(13.00)	56.67%
28B	EA 1-1/2" Dual Ck / Bldg	$ 290.00	2	$ 580.00	1.00	$ 290.00	$ (290.00)	(1.00)	50.00%
28C	EA 1" RPZ in Bldg	$ 230.00	2	$ 460.00	4.00	$ 920.00	$ 460.00	2.00	200.00%
28D	EA 1" RPZ in Hot Box	$ 2,300.00	2	$ 4,600.00	2.00	$ 4,600.00	$ -	0.00	100.00%
28E	EA 1-1/2" RPZ in Bldg.	$ 500.00	1	$ 500.00	5.00	$ 2,500.00	$ 2,000.00	4.00	500.00%
28F	EA 1-1/2" RPZ in Hot Box	$ 2,500.00	2	$ 5,000.00	1.00	$ 2,500.00	$ (2,500.00)	(1.00)	50.00%
28G	EA 2" RPZ in Bldg	$ 600.00	2	$ 1,200.00	2.00	$ 1,200.00	$ -	0.00	100.00%
28H	EA 2" RPZ in Hot Box	$ 3,100.00	2	$ 6,200.00	2.00	$ 6,200.00	$ -	0.00	100.00%
28I	EA 4" RPZ in Hot Box	$ 7,600.00	1	$ 7,600.00	1.00	$ 7,600.00	$ -	0.00	100.00%
29	EA Pressure Red. Valves	$ 95.00	70	$ 6,650.00	66.00	$ 6,270.00	$ (380.00)	(4.00)	94.29%
30	EA Bentonite clay stops	$ 400.00	10	$ 4,000.00	5.00	$ 2,000.00	$ (2,000.00)	(5.00)	50.00%
31	EA Remove Gr. Treat. Eq.	$ 70.00	70	$ 4,900.00	44.00	$ 3,080.00	$ (1,820.00)	(26.00)	62.86%
32A	LS Meter Vault A	$ 14,000.00	1	$ 14,000.00	1.00	$ 14,000.00	$ -	0.00	100.00%
32B	LS Meter Vault B	$ 24,000.00	1	$ 24,000.00	1.00	$ 24,000.00	$ -	0.00	100.00%
32C	LS Meter Vault C	$ 24,000.00	1	$ 24,000.00	1.00	$ 24,000.00	$ -	0.00	100.00%
33	LS RPZ Valve Vault A	$ 26,000.00	1	$ 26,000.00	1.00	$ 26,000.00	$ -	0.00	100.00%
34	LS RPZ Vault & Chl. Sta.	$ 33,000.00	1	$ 33,000.00	1.00	$ 33,000.00	$ -	0.00	100.00%
35	LS Cross Mud Cr. Gulf Rd	$ 5,000.00	1	$ 5,000.00	1.00	$ 5,000.00	$ -	0.00	100.00%
36	LS MCWA Allowance	$ 150,000.00	1	$ 150,000.00	0.19	$ 27,859.66	$ (122,140.34)	(0.81)	18.57%
37	LS LCWSA Allowance	$ 50,000.00	1	$ 50,000.00	0.90	$ 45,000.00	$ (5,000.00)	(0.10)	90.00%
CO 1-A	Agreement on Well	$ 10,342.50	1	$ 11,427.37	1.00	$ 10,342.50	$ (1,084.87)	0.00	100.00%
CO 1-B	Water Samples	$ 450.00	3	$ 1,350.00	3.00	$ 1,350.00	$ -	0.00	100.00%
CO 1-C	Electrical @ Dolomite	$ 1,237.63	1	$ 1,237.63	1.00	$ 1,237.63	$ -	0.00	100.00%
CO 1-D	Expansion Tanks	$ 203.00	37	$ 7,511.00	23.00	$ 4,669.00	$ (2,842.00)	(14.00)	62.16%
CO 1-E	Delete meters in Vaults	$ (11,336.00)	1	$ (11,336.00)	1.00	$ (11,336.00)	$ -	0.00	100.00%
CO 1-F	Last 5-samples-Dolomite	$ 370.00	5	$ 1,850.00	5.00	$ 1,850.00	$ -	0.00	100.00%
CO 2-A	Spring Creek Crossing	$ 14,321.70	1	$ 14,321.70	1.00	$ 14,321.70	$ -	0.00	100.00%
CO 2-B	New Well Abandonment	$ 21.00	65	$ 1,365.00	50.00	$ 1,050.00	$ (315.00)	(15.00)	76.92%
CO 2-C	Delete Chlor. Facility	$ (5,043.26)	1	$ (5,043.26)	1.00	$ (5,043.26)	$ -	0.00	100.00%
CO 2-D	Add thrust Blocks	$ 3,684.08	1	$ 3,684.08	1.00	$ 3,684.08	$ -	0.00	100.00%
CO 2-E	Bollards	$ 303.00	17	$ 5,151.00	22.00	$ 6,666.00	$ 1,515.00	5.00	129.41%
CO 2-F	Remove Carbon Filter Sys.	$ 1,934.44	1	$ 1,934.44	1.00	$ 1,934.44	$ -	0.00	100.00%
	TOTALS:			$ 6,428,307.96		$ 6,190,302.41	**$ (238,005.55) Total Credit**		

Explanation for Items whose total cost changed by over $30,000 **and** differs by more then 15% of the estimated original quantity.

Test Reports

COUNTY OF GENESEE
HEALTH DEPARTMENT

THOMAS A. GUERIN, P.E.
Director, Environmental Health

3837 West Main Street Road
Batavia, New York 14020-9406

Phone: (585) 344-8506
Fax: (585) 344-4713

October 23, 2002

Joseph Moloughney, P.E., Environmental Engineer
Bureau of Western Remedial Action, 11th Floor
New York State Department of Environmental Conservation
625 Broadway
Albany, NY 12233-7010

Re: Water System Installation, Lehigh Valley RR Site
Town of LeRoy, Genesee County

Dear Mr. Moloughney:

The Genesee County Laboratory has reported the results of bacteriological examination of water samples collected from disinfection/sampling points along a portion of the Lehigh Valley Railroad Derailment Remediation Site, specifically:

- Gulf Road ~ 0+00 – 60+15
- Church Road ~ 0+00 – 19+80
- Route 5 ~ 0+00 – 80+48

All the results indicate the water samples were of satisfactory bacteriological quality, at the time of collection.

Connections of residences and businesses along this portion of the project may proceed.

Should you have any questions, please feel free to call.

Very truly yours,

Thomas A. Guerin, P.E.
Director, Environmental Health Services

cc: Jay Gsell, County Manager
Randolph P. Garney, SrPHS
Tina Hunt, P.E., NYSDOH
Ralph Harstad, P.E., NYSDOH
Steven G. Gould, P.E., MCWA
Rochelle Stein, T/LeRoy
Titus Falkenburg, P.E., S&W

COUNTY OF GENESEE
HEALTH DEPARTMENT

THOMAS A. GUERIN, P.E.
Director, Environmental Health

3837 West Main Street Road
Batavia, New York 14020-9406

Phone: (585) 344-8506
Fax: (585) 344-4713

June 10, 2002

Joseph Moloughney, P.E., Environmental Engineer
Bureau of Western Remedial Action, 11th Floor
New York State Department of Environmental Conservation
625 Broadway
Albany, NY 12233-7010

Re: Water System Installation, Lehigh Valley RR Site
Town of LeRoy, Genesee County

Dear Mr. Moloughney:

The Genesee County Laboratory has reported the results of bacteriological examination of water samples collected from disinfection/sampling points along a portion of the Lehigh Valley Railroad Derailment Remediation Site, specifically:

- North Street Road
- Lehigh Valley railroad bed
- Circular Hill Road

All the results indicate the water samples were of satisfactory bacteriological quality, at the time of collection.

Connections of residences and businesses along this portion of the project may proceed.

Should you have any questions, please feel free to call.

Very truly yours,

Thomas A. Guerin, P.E.
Director, Environmental Health Services

cc: Jay Gsell, County Manager
Randolph P. Garney, PHS
Brian Fear, P.E., NYSDOH
Ralph Harstad, P.E., NYSDOH
Steven G. Gould, P.E., MCWA
Rochelle Stein, T/LeRoy
Titus Falkenburg, P.E., S&W

A:\LERT\DEC\Sec-01.rtf

Watermain Certification

Project Name Lehigh Valley Railroad Derailment Site

Municipality Twn. of Caledonia / Village of Caledonia

Section Certified
McIntyre Rd., NYS-RTE. 5 (from McIntyre Rd. → Spring St.)

Firm Submitting Stearns & Wheler, LLC

FLUSHING

Date of completion of construction 08/29/02

Date of Initial Flushing 09/12/02

PRESSURE TEST (AWWA C600)

Date of Test 09/13/02

Initial Pressure 152 psi

Pressure @ 1 hours 152 psi

DISINFECTION (AWWA C651)

Date of Disinfection 10/28/02

Date of Final Flushing 10/30/02

CERTIFICATION

I, C. Michael Elliott, certify that the above water supply improvement was completed in conformance with approved plans, specifications and any approved amendments and was pressure tested and disinfected in accordance with the supplier of water's specifications with the above recorded results. The watermain is hereby ready for bacteriological testing.

Michael C. Elliott P.E. License No. 55513 Date 11/1/02

(Signature)

Watermain Certification

Project Name Lehigh Valley Railroad Derailment Site

Municipality Twn. of Caledonia

Section Certified
NYS-RTE. 5, FLINT HILL RD. → McIntyre RD.

Firm Submitting Stearns & Wheler, LLC

FLUSHING

Date of completion of construction 07/03/02

Date of Initial Flushing 07/10/02

PRESSURE TEST (AWWA C600)

Date of Test 07/11/02

Initial Pressure 150 psi

Pressure @ 1 hours 150 psi

DISINFECTION (AWWA C651)

Date of Disinfection 10/28/02

Date of Final Flushing 10/30/02

CERTIFICATION

I, C. Michael Elliott, certify that the above water supply improvement was completed in conformance with approved plans, specifications and any approved amendments and was pressure tested and disinfected in accordance with the supplier of water's specifications with the above recorded results. The watermain is hereby ready for bacteriological testing.

(Signature) P.E. License No. 55i3 Date 11/1/02

Watermain Certification

Project Name Lehigh Valley Railroad Derailment Site

Municipality Twn. of Caledonia / Twn. of Wheatland

Section Certified
Spring St. (Roch. & Southern R.R.) → George St. → Flint Hill Ra

Firm Submitting Stearns & Wheler, LLC

FLUSHING

Date of completion of construction 10/10/02

Date of Initial Flushing 10/21/02

PRESSURE TEST (AWWA C600)

Date of Test 10/22/02

Initial Pressure 151 psi

Pressure @ 1 hours 151 psi

DISINFECTION (AWWA C651)

Date of Disinfection 10/29/02

Date of Final Flushing 10/30/02

CERTIFICATION

I, C. Michael Elliott, certify that the above water supply improvement was completed in conformance with approved plans, specifications and any approved amendments and was pressure tested and disinfected in accordance with the supplier of water's specifications with the above recorded results. The watermain is hereby ready for bacteriological testing.

(Signature) P.E. License No. 55513 Date 11/1/02

Watermain Certification

Project Name Lehigh Valley Railroad Derailment Site

Municipality Twp. of Wheatland

Section Certified
Through Genesee Country Museum (Flint Hill / Limerock int. section → George / Flint.

Firm Submitting Stearns & Wheler, LLC

FLUSHING

Date of completion of construction 10/10/02

Date of Initial Flushing 10/21/02

PRESSURE TEST (AWWA C600)

Date of Test 10/22/02

Initial Pressure 151 psi

Pressure @ 1 hours 151 psi

DISINFECTION (AWWA C651)

Date of Disinfection 10/29/02

Date of Final Flushing 10/30/02

CERTIFICATION

I, C. Michael Ellis, certify that the above water supply improvement was completed in conformance with approved plans, specifications and any approved amendments and was pressure tested and disinfected in accordance with the supplier of water's specifications with the above recorded results. The watermain is hereby ready for bacteriological testing.

Michael Ellis P.E. License No. 55513 Date 11/1/02
(Signature)

MONROE COUNTY

Department of Health

John D. Doyle
County Executive

Andrew S. Doniger, M.D., M.P.H.
Director

STEARNS & WHELER
NOV 27 2002

November 20, 2002

Mr. Thomas Stein
Monroe County Water Authority
475 Norris Drive
Rochester, New York 14610

Re: Approval of Completed Works
Lehigh Valley Railroad Derailment Site
Town of LeRoy, Town/Village of Caledonia

Dear Mr. Stein:

This Department has received certification by C. Michael Elliott, P.E., dated Octobewr 18, 2002 and November 1, 2002 for the above referenced project stating that the installation, testing and disinfection procedures were performed and completed in accordance with the approved plans, specifications and any approved amendments.

A copy of our Approval of Completed Works (DOH-1032) is attached for your files.

Sincerely,

John J. Frazer, P.E.
Senior Public Health Engineer

Xc: Michael Montysko, NYS Dept of Health, Albany
Stearns & Wheler, LLC, Town of Caledonia, Village of Caledonia, Town of LeRoy, File

NEW YORK STATE DEPARTMENT OF HEALTH

APPROVAL OF COMPLETED WORKS

FOR

PUBLIC WATER SUPPLY IMPROVEMENT

MONROE COUNTY, NEW YORK

This approval is issued under provisions of 10 NYCRR, Part 5:

1. Applicant/Facility	2. Location of Works	3. Water District
Monroe County Water Authority	Town of Caledonia, Town of Leroy, Village of Caledonia	Monroe County Water Authority Service Area

Plans for the construction of this project were approved on May 15, 2001 by the New York State Department of Health.

This approval for completed works is issued subject to the following condition:

That the watermain and appurtenances shall be operated and maintained in complete conformance with Part 5 of the New York State Sanitary Code.

Project Description:
Approval of Completed Works
Lehigh Valley Railroad Derailment Site
Town of LeRoy, Town/Village of Caledonia

ISSUED FOR THE STATE COMMISSIONER OF HEALTH

John J. Frazer, P.E.
Senior Public Health Engineer

Date: November 20,2002

DOH-1032

MONROE COUNTY

Department of Health

John D. Doyle
County Executive

Andrew S. Doniger, M.D., M.P.H.
Director

10/21/2002

RESULTS OF MCHD WATER SAMPLING

MILLHURST CONSTRUCTION
P.O. BOX 631
GETZVILLE, NY 14068

SOURCE OF WATER: MCWA
INSPECTOR: JAY DIEDRECK
DATE COLLECTED: 10/16/2002

LOCATION: LEHIGH VALLEY (DEC)

SAMPLING POINT:	FLINT HILL INJ. 0+13
CHLORINE RESIDUAL:	0.6
24 HR. PLATE COUNT:	Pass
TOTAL COLIFORM:	1 LT

THESE RESULTS INDICATE THAT THE SAMPLE WAS BACTERIOLOGICALLY POTABLE WHEN COLLECTED.

SAMPLING POINT:	FLINT HILL INJ. 10+00
CHLORINE RESIDUAL:	0.5
24 HR. PLATE COUNT:	Pass
TOTAL COLIFORM:	1 LT

THESE RESULTS INDICATE THAT THE SAMPLE WAS BACTERIOLOGICALLY POTABLE WHEN COLLECTED.

FOR FURTHER INFORMATION PLEASE CALL JAY DIEDRECK AT 274-6073.

KENNETH M. NAUGLE
ASSISTANT PUBLIC HEALTH ENGINEER

MONROE COUNTY

Department of Health

John D. Doyle
County Executive

Andrew S. Doniger, M.D., M.P.H.
Director

10/21/2002

RESULTS OF MCHD WATER SAMPLING

MILLHURST CONSTRUCTION
P.O. BOX 631
GETZVILLE, NY 14068

SOURCE OF WATER: MCWA
INSPECTOR: JAY DIEDRECK
DATE COLLECTED: 10/16/2002

LOCATION: LEHIGH VALLEY (DEC)

SAMPLING POINT:	FLINT HILL INJ. 20+50
CHLORINE RESIDUAL:	0.5
24 HR. PLATE COUNT:	Pass
TOTAL COLIFORM:	1 LT

THESE RESULTS INDICATE THAT THE SAMPLE WAS BACTERIOLOGICALLY POTABLE WHEN COLLECTED.

SAMPLING POINT:	FLINT HILL INJ. 30+50
CHLORINE RESIDUAL:	0.5
24 HR. PLATE COUNT:	Pass
TOTAL COLIFORM:	1 LT

THESE RESULTS INDICATE THAT THE SAMPLE WAS BACTERIOLOGICALLY POTABLE WHEN COLLECTED.

FOR FURTHER INFORMATION PLEASE CALL JAY DIEDRECK AT 274-6073.

KENNETH M. NAUGLE
ASSISTANT PUBLIC HEALTH ENGINEER

MONROE COUNTY

Department of Health

John D. Doyle
County Executive

Andrew S. Doniger, M.D., M.P.H.
Director

10/21/2002

RESULTS OF MCHD WATER SAMPLING

MILLHURST CONSTRUCTION
P.O. BOX 631
GETZVILLE, NY 14068

SOURCE OF WATER: MCWA
INSPECTOR: JAY DIEDRECK
DATE COLLECTED: 10/16/2002

LOCATION: LEHIGH VALLEY (DEC)

SAMPLING POINT:	FLINT HILL INJ. 33+60 CAMPGROUND
CHLORINE RESIDUAL:	0.5
24 HR. PLATE COUNT:	Pass
TOTAL COLIFORM:	1 LT

THESE RESULTS INDICATE THAT THE SAMPLE WAS BACTERIOLOGICALLY POTABLE WHEN COLLECTED.

SAMPLING POINT:	FLINT HILL INJ. 40+00
CHLORINE RESIDUAL:	0.6
24 HR. PLATE COUNT:	Pass
TOTAL COLIFORM:	1 LT

THESE RESULTS INDICATE THAT THE SAMPLE WAS BACTERIOLOGICALLY POTABLE WHEN COLLECTED.

FOR FURTHER INFORMATION PLEASE CALL JAY DIEDRECK AT 274-6073.

KENNETH M. NAUGLE
ASSISTANT PUBLIC HEALTH ENGINEER

MONROE COUNTY

Department of Health

John D. Doyle
County Executive

Andrew S. Doniger, M.D., M.P.H.
Director

10/21/2002

RESULTS OF MCHD WATER SAMPLING

MILLHURST CONSTRUCTION
P.O. BOX 631
GETZVILLE, NY 14068

SOURCE OF WATER: MCWA
INSPECTOR: JAY DIEDRECK
DATE COLLECTED: 10/16/2002

LOCATION: LEHIGH VALLEY (DEC)

SAMPLING POINT:	LIME ROCK 10+10
CHLORINE RESIDUAL:	0.6
24 HR. PLATE COUNT:	Pass
TOTAL COLIFORM:	1 LT

THESE RESULTS INDICATE THAT THE SAMPLE WAS BACTERIOLOGICALLY POTABLE WHEN COLLECTED.

SAMPLING POINT:	LIME ROCK 20+00
CHLORINE RESIDUAL:	0.5
24 HR. PLATE COUNT:	Pass
TOTAL COLIFORM:	1 LT

THESE RESULTS INDICATE THAT THE SAMPLE WAS BACTERIOLOGICALLY POTABLE WHEN COLLECTED.

FOR FURTHER INFORMATION PLEASE CALL JAY DIEDRECK AT 274-6073.

KENNETH M. NAUGLE
ASSISTANT PUBLIC HEALTH ENGINEER

MONROE COUNTY

Department of Health

John D. Doyle
County Executive

Andrew S. Doniger, M.D., M.P.H.
Director

10/21/2002

RESULTS OF MCHD WATER SAMPLING

MILLHURST CONSTRUCTION
P.O. BOX 631
GETZVILLE, NY 14068

SOURCE OF WATER: MCWA
INSPECTOR: JAY DIEDRECK
DATE COLLECTED: 10/16/2002

LOCATION: LEHIGH VALLEY (DEC)

SAMPLING POINT:	LIME ROCK 31+75
CHLORINE RESIDUAL:	0.6
24 HR. PLATE COUNT:	Pass
TOTAL COLIFORM:	1 LT

THESE RESULTS INDICATE THAT THE SAMPLE WAS BACTERIOLOGICALLY POTABLE WHEN COLLECTED.

SAMPLING POINT:	FLINT HILL (NORTH) 40+00
CHLORINE RESIDUAL:	0.6
24 HR. PLATE COUNT:	Pass
TOTAL COLIFORM:	1 LT

THESE RESULTS INDICATE THAT THE SAMPLE WAS BACTERIOLOGICALLY POTABLE WHEN COLLECTED.

FOR FURTHER INFORMATION PLEASE CALL JAY DIEDRECK AT 274-6073.

KENNETH M. NAUGLE
ASSISTANT PUBLIC HEALTH ENGINEER

MONROE COUNTY

Department of Health

John D. Doyle
County Executive

Andrew S. Doniger, M.D., M.P.H.
Director

10/21/2002

RESULTS OF MCHD WATER SAMPLING

MILLHURST CONSTRUCTION
P.O. BOX 631
GETZVILLE, NY 14068

SOURCE OF WATER: MCWA
INSPECTOR: JAY DIEDRECK
DATE COLLECTED: 10/16/2002

LOCATION: LEHIGH VALLEY (DEC)

SAMPLING POINT:	FLINT HILL (NORTH) 30+00
CHLORINE RESIDUAL:	0.5
24 HR. PLATE COUNT:	Pass
TOTAL COLIFORM:	1 LT

THESE RESULTS INDICATE THAT THE SAMPLE WAS BACTERIOLOGICALLY POTABLE WHEN COLLECTED.

SAMPLING POINT:	FLINT HILL (NORTH) 20+00
CHLORINE RESIDUAL:	0.6
24 HR. PLATE COUNT:	Pass
TOTAL COLIFORM:	1 LT

THESE RESULTS INDICATE THAT THE SAMPLE WAS BACTERIOLOGICALLY POTABLE WHEN COLLECTED.

FOR FURTHER INFORMATION PLEASE CALL JAY DIEDRECK AT 274-6073.

KENNETH M. NAUGLE
ASSISTANT PUBLIC HEALTH ENGINEER

MONROE COUNTY

Department of Health

John D. Doyle
County Executive

Andrew S. Doniger, M.D., M.P.H.
Director

10/21/2002

RESULTS OF MCHD WATER SAMPLING

MILLHURST CONSTRUCTION
P.O. BOX 631
GETZVILLE, NY 14068

SOURCE OF WATER: MCWA
INSPECTOR: JAY DIEDRECK
DATE COLLECTED: 10/16/2002

LOCATION: LEHIGH VALLEY (DEC)

SAMPLING POINT:	FLINT HILL (NORTH) 10+00 ENDPT.
CHLORINE RESIDUAL:	0.6
24 HR. PLATE COUNT:	Pass
TOTAL COLIFORM:	1 LT

THESE RESULTS INDICATE THAT THE SAMPLE WAS BACTERIOLOGICALLY POTABLE WHEN COLLECTED.

FOR FURTHER INFORMATION PLEASE CALL JAY DIEDRECK AT 274-6073.

KENNETH M. NAUGLE
ASSISTANT PUBLIC HEALTH ENGINEER

MONROE COUNTY

Department of Health

John D. Doyle
County Executive

Andrew S. Doniger, M.D., M.P.H.
Director

11/4/2002

RESULTS OF MCHD WATER SAMPLING

MILLHURST CONSTRUCTION
P.O. BOX 631
GETZVILLE, NY 14068

SOURCE OF WATER: MCWA
INSPECTOR: JAY DIEDRECK
DATE COLLECTED: 10/31/2002

LOCATION: LEHIGH VALLEY DEC

SAMPLING POINT:	LV RT. 5 90+05
CHLORINE RESIDUAL:	0.6
24 HR. PLATE COUNT:	PASS
TOTAL COLIFORM:	1 LT

THESE RESULTS INDICATE THAT THE SAMPLE WAS BACTERIOLOGICALLY POTABLE WHEN COLLECTED.

SAMPLING POINT:	LV RT. 5 100+48.5
CHLORINE RESIDUAL:	0.7
24 HR. PLATE COUNT:	PASS
TOTAL COLIFORM:	1 LT

THESE RESULTS INDICATE THAT THE SAMPLE WAS BACTERIOLOGICALLY POTABLE WHEN COLLECTED.

FOR FURTHER INFORMATION PLEASE CALL JAY DIEDRECK AT 274-6073.

KENNETH M. NAUGLE
ASSISTANT PUBLIC HEALTH ENGINEER

printed on recycled paper

MONROE COUNTY

Department of Health

John D. Doyle
County Executive

Andrew S. Doniger, M.D., M.P.H.
Director

11/4/2002

RESULTS OF MCHD WATER SAMPLING

MILLHURST CONSTRUCTION
P.O. BOX 631
GETZVILLE, NY 14068

SOURCE OF WATER: MCWA
INSPECTOR: JAY DIEDRECK
DATE COLLECTED: 10/31/2002

LOCATION: LEHIGH VALLEY DEC

SAMPLING POINT:	LV RT. 5 110+04
CHLORINE RESIDUAL:	0.7
24 HR. PLATE COUNT:	PASS
TOTAL COLIFORM:	1 LT

THESE RESULTS INDICATE THAT THE SAMPLE WAS BACTERIOLOGICALLY POTABLE WHEN COLLECTED.

SAMPLING POINT:	LV RT. 5 120+30
CHLORINE RESIDUAL:	0.6
24 HR. PLATE COUNT:	PASS
TOTAL COLIFORM:	1 LT

THESE RESULTS INDICATE THAT THE SAMPLE WAS BACTERIOLOGICALLY POTABLE WHEN COLLECTED.

FOR FURTHER INFORMATION PLEASE CALL JAY DIEDRECK AT 274-6073.

KENNETH M. NAUGLE
ASSISTANT PUBLIC HEALTH ENGINEER

MONROE COUNTY

Department of Health

John D. Doyle
County Executive

Andrew S. Doniger, M.D., M.P.H.
Director

11/4/2002

RESULTS OF MCHD WATER SAMPLING

MILLHURST CONSTRUCTION
P.O. BOX 631
GETZVILLE, NY 14068

SOURCE OF WATER: MCWA
INSPECTOR: JAY DIEDRECK
DATE COLLECTED: 10/31/2002

LOCATION: LEHIGH VALLEY DEC

SAMPLING POINT:	LV RT. 5 130+59
CHLORINE RESIDUAL:	0.6
24 HR. PLATE COUNT:	PASS
TOTAL COLIFORM:	1 LT

THESE RESULTS INDICATE THAT THE SAMPLE WAS BACTERIOLOGICALLY POTABLE WHEN COLLECTED.

SAMPLING POINT:	LV MCINTYRE 8+60.5 (ENDPT.)
CHLORINE RESIDUAL:	0.6
24 HR. PLATE COUNT:	PASS
TOTAL COLIFORM:	1 LT

TURBIDITY: .14

THESE RESULTS INDICATE THAT THE SAMPLE WAS BACTERIOLOGICALLY POTABLE WHEN COLLECTED.

FOR FURTHER INFORMATION PLEASE CALL JAY DIEDRECK AT 274-6073.

KENNETH M. NAUGLE
ASSISTANT PUBLIC HEALTH ENGINEER

printed on recycled paper

MONROE COUNTY

Department of Health

John D. Doyle
County Executive

Andrew S. Doniger, M.D., M.P.H.
Director

11/4/2002

RESULTS OF MCHD WATER SAMPLING

MILLHURST CONSTRUCTION
P.O. BOX 631
GETZVILLE, NY 14068

SOURCE OF WATER: MCWA
INSPECTOR: JAY DIEDRECK
DATE COLLECTED: 10/31/2002

LOCATION: LEHIGH VALLEY DEC

SAMPLING POINT:	LV RT. 5 140+12
CHLORINE RESIDUAL:	0.5
24 HR. PLATE COUNT:	PASS
TOTAL COLIFORM:	1 LT

THESE RESULTS INDICATE THAT THE SAMPLE WAS BACTERIOLOGICALLY POTABLE WHEN COLLECTED.

SAMPLING POINT:	LV RT. 5 149+82.5
CHLORINE RESIDUAL:	0.7
24 HR. PLATE COUNT:	PASS
TOTAL COLIFORM:	1 LT

THESE RESULTS INDICATE THAT THE SAMPLE WAS BACTERIOLOGICALLY POTABLE WHEN COLLECTED.

FOR FURTHER INFORMATION PLEASE CALL JAY DIEDRECK AT 274-6073.

KENNETH M. NAUGLE
ASSISTANT PUBLIC HEALTH ENGINEER

MONROE COUNTY

Department of Health

John D. Doyle
County Executive

Andrew S. Doniger, M.D., M.P.H.
Director

11/4/2002

RESULTS OF MCHD WATER SAMPLING

MILLHURST CONSTRUCTION
P.O. BOX 631
GETZVILLE, NY 14068

SOURCE OF WATER: MCWA
INSPECTOR: JAY DIEDRECK
DATE COLLECTED: 10/31/2002

LOCATION: LEHIGH VALLEY DEC

SAMPLING POINT:	LV RT. 5 160+27
CHLORINE RESIDUAL:	0.7
24 HR. PLATE COUNT:	PASS
TOTAL COLIFORM:	1 LT

THESE RESULTS INDICATE THAT THE SAMPLE WAS BACTERIOLOGICALLY POTABLE WHEN COLLECTED.

SAMPLING POINT:	LV RT. 5 171+66.5
CHLORINE RESIDUAL:	0.7
24 HR. PLATE COUNT:	PASS
TOTAL COLIFORM:	1 LT

THESE RESULTS INDICATE THAT THE SAMPLE WAS BACTERIOLOGICALLY POTABLE WHEN COLLECTED.

FOR FURTHER INFORMATION PLEASE CALL JAY DIEDRECK AT 274-6073.

KENNETH M. NAUGLE
ASSISTANT PUBLIC HEALTH ENGINEER

MONROE COUNTY

Department of Health

John D. Doyle
County Executive

Andrew S. Doniger, M.D., M.P.H.
Director

11/4/2002

RESULTS OF MCHD WATER SAMPLING

MILLHURST CONSTRUCTION
P.O. BOX 631
GETZVILLE, NY 14068

SOURCE OF WATER: MCWA
INSPECTOR: JAY DIEDRECK
DATE COLLECTED: 10/31/2002

LOCATION: LEHIGH VALLEY DEC

SAMPLING POINT:	LV RT. 5 179+77
CHLORINE RESIDUAL:	0.7
24 HR. PLATE COUNT:	PASS
TOTAL COLIFORM:	1 LT

THESE RESULTS INDICATE THAT THE SAMPLE WAS BACTERIOLOGICALLY POTABLE WHEN COLLECTED.

SAMPLING POINT:	LV RT. 5 190+90
CHLORINE RESIDUAL:	0.7
24 HR. PLATE COUNT:	PASS
TOTAL COLIFORM:	1 LT

THESE RESULTS INDICATE THAT THE SAMPLE WAS BACTERIOLOGICALLY POTABLE WHEN COLLECTED.

FOR FURTHER INFORMATION PLEASE CALL JAY DIEDRECK AT 274-6073.

KENNETH M. NAUGLE
ASSISTANT PUBLIC HEALTH ENGINEER

MONROE COUNTY

Department of Health

John D. Doyle
County Executive

Andrew S. Doniger, M.D., M.P.H.
Director

11/4/2002

RESULTS OF MCHD WATER SAMPLING

MILLHURST CONSTRUCTION
P.O. BOX 631
GETZVILLE, NY 14068

SOURCE OF WATER: MCWA
INSPECTOR: JAY DIEDRECK
DATE COLLECTED: 10/31/2002

LOCATION: LEHIGH VALLEY DEC

SAMPLING POINT:	LV RT. 5 200+02
CHLORINE RESIDUAL:	0.7
24 HR. PLATE COUNT:	PASS
TOTAL COLIFORM:	1 LT

THESE RESULTS INDICATE THAT THE SAMPLE WAS BACTERIOLOGICALLY POTABLE WHEN COLLECTED.

SAMPLING POINT:	LV RT. 5 210+10
CHLORINE RESIDUAL:	0.7
24 HR. PLATE COUNT:	PASS
TOTAL COLIFORM:	1 LT

THESE RESULTS INDICATE THAT THE SAMPLE WAS BACTERIOLOGICALLY POTABLE WHEN COLLECTED.

FOR FURTHER INFORMATION PLEASE CALL JAY DIEDRECK AT 274-6073.

KENNETH M. NAUGLE
ASSISTANT PUBLIC HEALTH ENGINEER

MONROE COUNTY

Department of Health

John D. Doyle
County Executive

Andrew S. Doniger, M.D., M.P.H.
Director

11/4/2002

RESULTS OF MCHD WATER SAMPLING

MILLHURST CONSTRUCTION
P.O. BOX 631
GETZVILLE, NY 14068

SOURCE OF WATER: MCWA
INSPECTOR: JAY DIEDRECK
DATE COLLECTED: 10/31/2002

LOCATION: LEHIGH VALLEY DEC

SAMPLING POINT:	LV RT. 5 219+80
CHLORINE RESIDUAL:	0.7
24 HR. PLATE COUNT:	PASS
TOTAL COLIFORM:	1 LT

THESE RESULTS INDICATE THAT THE SAMPLE WAS BACTERIOLOGICALLY POTABLE WHEN COLLECTED.

SAMPLING POINT:	LV RT. 5 227+29
CHLORINE RESIDUAL:	0.7
24 HR. PLATE COUNT:	PASS
TOTAL COLIFORM:	1 LT

TURBIDITY: .14

THESE RESULTS INDICATE THAT THE SAMPLE WAS BACTERIOLOGICALLY POTABLE WHEN COLLECTED.

FOR FURTHER INFORMATION PLEASE CALL JAY DIEDRECK AT 274-6073.

KENNETH M. NAUGLE
ASSISTANT PUBLIC HEALTH ENGINEER

MONROE COUNTY

Department of Health

John D. Doyle
County Executive

Andrew S. Doniger, M.D., M.P.H.
Director

11/4/2002

RESULTS OF MCHD WATER SAMPLING

MILLHURST CONSTRUCTION
P.O. BOX 631
GETZVILLE, NY 14068

SOURCE OF WATER: MCWA
INSPECTOR: JAY DIEDRECK
DATE COLLECTED: 10/31/2002

LOCATION: LEHIGH VALLEY DEC

SAMPLING POINT:	LV SPRING 0+60.5
CHLORINE RESIDUAL:	0.7
24 HR. PLATE COUNT:	PASS
TOTAL COLIFORM:	1 LT

THESE RESULTS INDICATE THAT THE SAMPLE WAS BACTERIOLOGICALLY POTABLE WHEN COLLECTED.

SAMPLING POINT:	LV SPRING 9+68.5
CHLORINE RESIDUAL:	0.7
24 HR. PLATE COUNT:	PASS
TOTAL COLIFORM:	1 LT

THESE RESULTS INDICATE THAT THE SAMPLE WAS BACTERIOLOGICALLY POTABLE WHEN COLLECTED.

FOR FURTHER INFORMATION PLEASE CALL JAY DIEDRECK AT 274-6073.

KENNETH M. NAUGLE
ASSISTANT PUBLIC HEALTH ENGINEER

MONROE COUNTY

Department of Health

John D. Doyle
County Executive

Andrew S. Doniger, M.D., M.P.H.
Director

11/4/2002

RESULTS OF MCHD WATER SAMPLING

MILLHURST CONSTRUCTION
P.O. BOX 631
GETZVILLE, NY 14068

SOURCE OF WATER: MCWA
INSPECTOR: JAY DIEDRECK
DATE COLLECTED: 10/31/2002

LOCATION: LEHIGH VALLEY DEC

SAMPLING POINT:	LV SPRING 19+97
CHLORINE RESIDUAL:	0.7
24 HR. PLATE COUNT:	PASS
TOTAL COLIFORM:	1 LT

THESE RESULTS INDICATE THAT THE SAMPLE WAS BACTERIOLOGICALLY POTABLE WHEN COLLECTED.

SAMPLING POINT:	LV SPRING 29+82
CHLORINE RESIDUAL:	0.7
24 HR. PLATE COUNT:	PASS
TOTAL COLIFORM:	1 LT

THESE RESULTS INDICATE THAT THE SAMPLE WAS BACTERIOLOGICALLY POTABLE WHEN COLLECTED.

FOR FURTHER INFORMATION PLEASE CALL JAY DIEDRECK AT 274-6073.

KENNETH M. NAUGLE
ASSISTANT PUBLIC HEALTH ENGINEER

MONROE COUNTY

Department of Health

John D. Doyle
County Executive

Andrew S. Doniger, M.D., M.P.H.
Director

11/4/2002

RESULTS OF MCHD WATER SAMPLING

MILLHURST CONSTRUCTION
P.O. BOX 631
GETZVILLE, NY 14068

SOURCE OF WATER: MCWA
INSPECTOR: JAY DIEDRECK
DATE COLLECTED: 10/31/2002

LOCATION: LEHIGH VALLEY DEC

SAMPLING POINT:	LV SPRING 40+46.5
CHLORINE RESIDUAL:	0.7
24 HR. PLATE COUNT:	PASS
TOTAL COLIFORM:	1 LT

THESE RESULTS INDICATE THAT THE SAMPLE WAS BACTERIOLOGICALLY POTABLE WHEN COLLECTED.

SAMPLING POINT:	LV SPRING 51+31
CHLORINE RESIDUAL:	0.7
24 HR. PLATE COUNT:	PASS
TOTAL COLIFORM:	1 LT

THESE RESULTS INDICATE THAT THE SAMPLE WAS BACTERIOLOGICALLY POTABLE WHEN COLLECTED.

FOR FURTHER INFORMATION PLEASE CALL JAY DIEDRECK AT 274-6073.

KENNETH M. NAUGLE
ASSISTANT PUBLIC HEALTH ENGINEER

MONROE COUNTY

Department of Health

John D. Doyle
County Executive

Andrew S. Doniger, M.D., M.P.H.
Director

11/4/2002

RESULTS OF MCHD WATER SAMPLING

MILLHURST CONSTRUCTION
P.O. BOX 631
GETZVILLE, NY 14068

SOURCE OF WATER: MCWA
INSPECTOR: JAY DIEDRECK
DATE COLLECTED: 10/31/2002

LOCATION: LEHIGH VALLEY DEC

SAMPLING POINT:	LV SPRING 59+59
CHLORINE RESIDUAL:	0.7
24 HR. PLATE COUNT:	PASS
TOTAL COLIFORM:	1 LT

THESE RESULTS INDICATE THAT THE SAMPLE WAS BACTERIOLOGICALLY POTABLE WHEN COLLECTED.

SAMPLING POINT:	LV SPRING 70+83 (ENDPT.)
CHLORINE RESIDUAL:	0.7
24 HR. PLATE COUNT:	PASS
TOTAL COLIFORM:	1 LT

TURBIDITY: .11

THESE RESULTS INDICATE THAT THE SAMPLE WAS BACTERIOLOGICALLY POTABLE WHEN COLLECTED.

FOR FURTHER INFORMATION PLEASE CALL JAY DIEDRECK AT 274-6073.

KENNETH M. NAUGLE
ASSISTANT PUBLIC HEALTH ENGINEER

printed on recycled paper

MONROE COUNTY

Department of Health

John D. Doyle
County Executive

Andrew S. Doniger, M.D., M.P.H.
Director

11/4/2002

RESULTS OF MCHD WATER SAMPLING

MILLHURST CONSTRUCTION
P.O. BOX 631
GETZVILLE, NY 14068

SOURCE OF WATER: MCWA
INSPECTOR: JAY DIEDRECK
DATE COLLECTED: 10/31/2002

LOCATION: LEHIGH VALLEY DEC

SAMPLING POINT:	LV GEORGE 118+59
CHLORINE RESIDUAL:	0.9
24 HR. PLATE COUNT:	PASS
TOTAL COLIFORM:	1 LT

THESE RESULTS INDICATE THAT THE SAMPLE WAS BACTERIOLOGICALLY POTABLE WHEN COLLECTED.

SAMPLING POINT:	LV GEORGE 107+65
CHLORINE RESIDUAL:	0.7
24 HR. PLATE COUNT:	PASS
TOTAL COLIFORM:	1 LT

THESE RESULTS INDICATE THAT THE SAMPLE WAS BACTERIOLOGICALLY POTABLE WHEN COLLECTED.

FOR FURTHER INFORMATION PLEASE CALL JAY DIEDRECK AT 274-6073.

KENNETH M. NAUGLE
ASSISTANT PUBLIC HEALTH ENGINEER

MONROE COUNTY

Department of Health

John D. Doyle
County Executive

Andrew S. Doniger, M.D., M.P.H.
Director

11/4/2002

RESULTS OF MCHD WATER SAMPLING

MILLHURST CONSTRUCTION
P.O. BOX 631
GETZVILLE, NY 14068

SOURCE OF WATER: MCWA
INSPECTOR: JAY DIEDRECK
DATE COLLECTED: 10/31/2002

LOCATION: LEHIGH VALLEY DEC

SAMPLING POINT:	LV GRAVEL 100+05
CHLORINE RESIDUAL:	0.7
24 HR. PLATE COUNT:	PASS
TOTAL COLIFORM:	1 LT

THESE RESULTS INDICATE THAT THE SAMPLE WAS BACTERIOLOGICALLY POTABLE WHEN COLLECTED.

SAMPLING POINT:	LV GRAVEL 89+84
CHLORINE RESIDUAL:	0.7
24 HR. PLATE COUNT:	PASS
TOTAL COLIFORM:	1 LT

THESE RESULTS INDICATE THAT THE SAMPLE WAS BACTERIOLOGICALLY POTABLE WHEN COLLECTED.

FOR FURTHER INFORMATION PLEASE CALL JAY DIEDRECK AT 274-6073.

KENNETH M. NAUGLE
ASSISTANT PUBLIC HEALTH ENGINEER

MONROE COUNTY

Department of Health

John D. Doyle
County Executive

Andrew S. Doniger, M.D., M.P.H.
Director

11/4/2002

RESULTS OF MCHD WATER SAMPLING

MILLHURST CONSTRUCTION
P.O. BOX 631
GETZVILLE, NY 14068

SOURCE OF WATER: MCWA
INSPECTOR: JAY DIEDRECK
DATE COLLECTED: 10/31/2002

LOCATION: LEHIGH VALLEY DEC

SAMPLING POINT:	LV GRAVEL 79+98.5
CHLORINE RESIDUAL:	0.6
24 HR. PLATE COUNT:	PASS
TOTAL COLIFORM:	1 LT

THESE RESULTS INDICATE THAT THE SAMPLE WAS BACTERIOLOGICALLY POTABLE WHEN COLLECTED.

SAMPLING POINT:	LV GRAVEL 70+7.5
CHLORINE RESIDUAL:	0.6
24 HR. PLATE COUNT:	PASS
TOTAL COLIFORM:	1 LT

THESE RESULTS INDICATE THAT THE SAMPLE WAS BACTERIOLOGICALLY POTABLE WHEN COLLECTED.

FOR FURTHER INFORMATION PLEASE CALL JAY DIEDRECK AT 274-6073.

KENNETH M. NAUGLE
ASSISTANT PUBLIC HEALTH ENGINEER

MONROE COUNTY

Department of Health

John D. Doyle
County Executive

Andrew S. Doniger, M.D., M.P.H.
Director

11/4/2002

RESULTS OF MCHD WATER SAMPLING

MILLHURST CONSTRUCTION
P.O. BOX 631
GETZVILLE, NY 14068

SOURCE OF WATER: MCWA
INSPECTOR: JAY DIEDRECK
DATE COLLECTED: 10/31/2002

LOCATION: LEHIGH VALLEY DEC

SAMPLING POINT:	LV GRAVEL 60+18.5
CHLORINE RESIDUAL:	0.7
24 HR. PLATE COUNT:	PASS
TOTAL COLIFORM:	1 LT

THESE RESULTS INDICATE THAT THE SAMPLE WAS BACTERIOLOGICALLY POTABLE WHEN COLLECTED.

SAMPLING POINT:	LV FLINT 50+30 (ENDPT.)
CHLORINE RESIDUAL:	0.7
24 HR. PLATE COUNT:	PASS
TOTAL COLIFORM:	1 LT

TURBIDITY: .15

THESE RESULTS INDICATE THAT THE SAMPLE WAS BACTERIOLOGICALLY POTABLE WHEN COLLECTED.

FOR FURTHER INFORMATION PLEASE CALL JAY DIEDRECK AT 274-6073.

KENNETH M. NAUGLE
ASSISTANT PUBLIC HEALTH ENGINEER

Watermain Certification

Project Name Lehigh Valley R.R. Derailment Site

Municipality Town of LeRoy

Section Certified
Church Rd. (NYS-RTE. 5 → Gulf Rd.)

Firm Submitting Stearns & Wheler, LLC

FLUSHING

Date of completion of construction 05/10/02

Date of Initial Flushing 6/27/02

PRESSURE TEST (AWWA C600)

Date of Test 6/28/02

Initial Pressure 150 psi

Pressure @ 1 hours 150 psi

DISINFECTION (AWWA C651)

Date of Disinfection 10/14/02

Date of Final Flushing 10/15/02

CERTIFICATION

I, C. Michael Elliott, P.E., certify that the above water supply improvement was completed in conformance with approved plans, specifications and any approved amendments and was pressure tested and disinfected in accordance with the supplier of water's specifications with the above recorded results. The watermain is hereby ready for bacteriological testing.

(Signature) P.E. License No. 55513 Date 10/18/02

Watermain Certification

Project Name Lehigh Valley R.R. Derailment Site

Municipality Twn. of Wheatland / Twn. of Caledonia

Section Certified
Flint Hill Rd. - Limerock Rd. (NYS. RTE-5 → Flint Hill-Monroe Cty.)

Firm Submitting Stearns & Wheler, LLC

FLUSHING

Date of completion of construction 08/01/02

Date of Initial Flushing 08/09/02

PRESSURE TEST (AWWA C600)

Date of Test 08/12/02

Initial Pressure 150 psi

Pressure @ 1 hours 150 psi

DISINFECTION (AWWA C651)

Date of Disinfection 10/14/02

Date of Final Flushing 10/15/02

CERTIFICATION

I, C. Michael Elliott, P.E., certify that the above water supply improvement was completed in conformance with approved plans, specifications and any approved amendments and was pressure tested and disinfected in accordance with the supplier of water's specifications with the above recorded results. The watermain is hereby ready for bacteriological testing.

(Signature) P.E. License No. 55513 Date 10/18/02

Watermain Certification

Project Name Lehigh Valley R.R. Derailment Site

Municipality Town of LeRoy

Section Certified
NYS - RTE. 5 (tie-in @ HSE #8177) → Flint Hill Rd.

Firm Submitting Stearns & Wheler, LLC

FLUSHING

Date of completion of construction 7/01/02

Date of Initial Flushing 7/10/02

PRESSURE TEST (AWWA C600)

Date of Test 7/11/02

Initial Pressure 150 psi

Pressure @ 1 hours 150 psi

DISINFECTION (AWWA C651)

Date of Disinfection 10/11/02

Date of Final Flushing 10/14/02

CERTIFICATION

I, C. Michael Elliott, P.E., certify that the above water supply improvement was completed in conformance with approved plans, specifications and any approved amendments and was pressure tested and disinfected in accordance with the supplier of water's specifications with the above recorded results. The watermain is hereby ready for bacteriological testing.

(Signature) P.E. License No. 55513 Date 10/18/02

Watermain Certification

Project Name Lehigh Valley R.R. Derailment Site

Municipality Twn. of Wheatland / Twn. of LeRoy

Section Certified
Flint Hill Rd. (Monroe Cty.) from Limerock Rd. → Gulf Rd. (Genesee Cty.) to the end of the line.

Firm Submitting Stearns & Wheler, LLC

FLUSHING

Date of completion of construction 08/15/02

Date of Initial Flushing 08/23, 08/29/02

PRESSURE TEST (AWWA C600)

Date of Test 08/26, 08/30/02

Initial Pressure 150 psi

Pressure @ 1 hours 150 psi

DISINFECTION (AWWA C651)

Date of Disinfection 10/14/02

Date of Final Flushing 10/15/02

CERTIFICATION

I, C. Michael Elliott, P.E., certify that the above water supply improvement was completed in conformance with approved plans, specifications and any approved amendments and was pressure tested and disinfected in accordance with the supplier of water's specifications with the above recorded results. The watermain is hereby ready for bacteriological testing.

(Signature) P.E. License No. 55513 Date 10/18/02

DISINFECTION, TESTING, AND FLUSHING OF WATER MAINS
TABULATION SHEET

Date 06/04/01 Weather Cloudy, Breezy Temperature high 60's
Section Tested see below 8814 ft. of 12-inch diameter pipe
Circular Hill Rd. (LVRR Bed > NYS-RT. 5) + 203' of 8" dia. pipe
Discharge Rate 2.5 gal/min; Application of 65 % hypochlorite (hth, powder)
solution @ gal/min

60 mg/l initial total chlorine residual @ end of line at 10:30A (time)

40 mg/l initial total chlorine residual @ end of 24 hours at 10:30A (time)

Method of Measuring Chlorine Residual Drop Count Method

Line Flushed at 400 gal/min for 2 hours 15 min. on 06/05/01 (date)

Bacteria Sample Collected at total of (11) (location) at 12:30PM/06-05-01 (time/date)

Bacteria Sample Results ✓ meet _____ do not meet NYSDOH drinking water standards for total coliform.

Line Ready for Service on 06/24/02 (date) — (time)

Line Put Into Service on 06/25/02 (date) 10⁰⁰/AM (time)

Owner's Representative Notified
Mark A. Grzella (name)
06/10/02 (date)
8:00A (time)

S&W Form 88B

END OF SECTION

Stearns & Wheler, LLC
ENVIRONMENTAL ENGINEERS & SCIENTISTS

Subject: Circular Hill Rd. Wm. Sample Pts.

Date: 06/05/01 Job No.: 10209.50

Comp. By: Checked By:

12" dia. & 8" dia. Watermain along Circular Hill Rd.

8,814' of 12" — 6922.5 c.f.

203' of 8" — 70.9 c.f.

6993.4 c.f. (7.48 g/c.f.) = 52,310 gal. ±

① STA. 1-76 1" Corp/Cu whip

② STA. 9+23.5 " " "

③ STA. 21+16 " " "

④ STA. 31+08.5 " " "

⑤ STA. 40+97 " " "

⑥ STA. 50+87 " " "

⑦ STA. 60+13 " " "

⑧ STA. 70+01 " " "

⑨ STA. 79+79 " " "

⑩ 2' North of 8" TS&V made to Wm. on N. side RTE. 5
(2" Corp/Cu whip, tap on new 8" DIP)

⑪ 2' North of 8" TS&V made to Wm. on S. side RTE. 5
(1" Corp/Cu whip, tap on new 8" DIP)

Sheet of

DISINFECTION, TESTING, AND FLUSHING OF WATER MAINS
TABULATION SHEET

Date 06/03/01 Weather Sunny, Clear Temperature Low 40's
Section Tested see below 6347 ft. of 12 -inch diameter pipe
North St. Rd. section, LVRR Bed (North St. Rd. > Circular Hill Rd.)
Discharge Rate 2.5 gal/min; Application of 65% hypochlorite
solution @ gal/min (hth, powder)

50 mg/l initial total chlorine residual @ end of line at
12:00 P (time)

30 mg/l initial total chlorine residual @ end of 24 hours at
12:00P (time)

Method of Measuring Chlorine Residual Drop Count Method

Line Flushed at 400 gal/min for 1 hours 45 min. on
06/04/01 (date)

Bacteria Sample Collected at total of (8) (location) at
2:00PM > / 06-04-01 (time/date)

Bacteria Sample Results ✓ meet _____ do not meet NYSDOH
drinking water standards for total coliform.

Line Ready for Service on 06/24/02 (date) — (time)

Line Put Into Service on 06/25/02 (date) 10:00AM (time)

Owner's Representative Notified
Mark A. Grzella (name)
06/10/02 (date)
8:00A (time)

S&W Form 88B

END OF SECTION

Stearns & Wheler, LLC
ENVIRONMENTAL ENGINEERS & SCIENTISTS

Subject: N. ST. Rd. & LVRR Bed — Wm. Sample Pts.
Date: 06/04/01
Job No.: 10209.50
Comp. By
Checked By

12" dia. Watermain along North St. Rd. and the LVRR Bed (N. ST. Rd. > Circular Hill Rd.)

6,347' of 12" — 4985 c.f. (7.48 g/c.f.) = 37,287 gal. ±

1. STA. 2+16 (N. ST. Rd.) 1" Corp/Cu whip
2. STA. 2' East of G.V. (O-04, on LVRR run) 1" Corp/Cu whip
3. STA. 10+00.5 1" Corp/Cu whip
4. STA. 20+00 " " "
5. STA. 29+93.5 " " "
6. STA. 39+82 " " "
7. STA. 49+72.5 " " "
8. STA. 59+91 " " "

DISINFECTION, TESTING, AND FLUSHING OF WATER MAINS
TABULATION SHEET

Date 10/11/02 Weather Overcast Temperature 50°
Section Tested NY3-RT.5 ± 8900 ft. of 12-inch diameter pipe

Discharge Rate 300 gal/min; Application of 68 % hypochlorite (both dry) solution @ gal/min

70 mg/l initial total chlorine residual @ end of line at 12:00P (time)

>50 mg/l initial total chlorine residual @ end of ~~24~~ 72 hours at 1:00P (time)

Method of Measuring Chlorine Residual Drop Count Method

Line Flushed at 400 gal/min for 5 hours 0 min. on 10/14/02 (date)

Bacteria Sample Collected at _____ (location) at _____ (time/date)

Bacteria Sample Results _____ meet _____ do not meet NYSDOH drinking water standards for total coliform.

Line Ready for Service on _____ (date) _____ (time)

Line Put Into Service on _____ (date) _____ (time)

Owner's Representative _____

Contractor's Representative _____

S&W Form 88B

END OF SECTION

DISINFECTION, TESTING, AND FLUSHING OF WATER MAINS
TABULATION SHEET

Date 10/14/02 Weather Cloudy-P.S. Temperature mid 40's
Section Tested Church Rd. 4850 ft. of 8 -inch diameter pipe

Discharge Rate 300 gal/min; Application of 68% hypochlorite (hth dry) solution @ gal/min

50 mg/l initial total chlorine residual @ end of line at 12:00P (time)

>25 mg/l initial total chlorine residual @ end of 24 hours at 10:30A (time) 10/15/02

Method of Measuring Chlorine Residual Drop Count Method

Line Flushed at 400 gal/min for > 5 hours 0 min. on 10/15/02 (date)

Bacteria Sample Collected at _____ (location) at _____ (time/date)

Bacteria Sample Results _____ meet _____ do not meet NYSDOH drinking water standards for total coliform.

Line Ready for Service on _____ (date) _____ (time)

Line Put Into Service on _____ (date) _____ (time)

Owner's Representative _____

Contractor's Representative _____

S&W Form 88B

END OF SECTION

DISINFECTION, TESTING, AND FLUSHING OF WATER MAINS
TABULATION SHEET

Date 10/14/02 Weather Cloudy-PC Temperature mid 40's
Section Tested 2596 ft. of 8 -inch diameter pipe
(→ Flint Hill - Lime Rock Rd. (NYS-RT 5 → Flint Hill Rd. Monroe Cty.)
Discharge Rate 200 gal/min; Application of 68 % hypochlorite (hch dry)
solution @ gal/min

50 mg/l initial total chlorine residual @ end of line at 1:15P (time)

>25 mg/l initial total chlorine residual @ end of 24 hours at 11:00A (time) 10/15/02

Method of Measuring Chlorine Residual Drop Count Method

Line Flushed at 400 gal/min for > 5 hours 0 min. on 10/15/02 (date)

Bacteria Sample Collected at _____ (location) at _____ (time/date)

Bacteria Sample Results _____ meet _____ do not meet NYSDOH drinking water standards for total coliform.

Line Ready for Service on _____ (date) _____ (time)

Line Put Into Service on _____ (date) _____ (time)

Owner's Representative _____

Contractor's Representative _____

S&W Form 88B

END OF SECTION

Date 10/14/02 Weather Cloudy-P.S. Temperature mid 40's
Section Tested _____ 10,295 ft. of 8-inch diameter pipe
Flint Hill Rd. Monroe Cty - Gulf Rd. Gen. Cty Lime Rock Rd. → East end
Discharge Rate 300 gal/min; Application of 68% hypochlorite (pth dry)
solution @ gal/min

50 mg/l initial total chlorine residual @ end of line at 3:00P (time)

>25 mg/l initial total chlorine residual @ end of 24 hours at _____ (time) 10/15/02

Method of Measuring Chlorine Residual Drop Count Method

Line Flushed at 900 gal/min for >5 hours 0 min. on 10/15/02 (date)

Bacteria Sample Collected at _____ (location) at _____ (time/date)

Bacteria Sample Results _____ meet _____ do not meet NYSDOH drinking water standards for total coliform.

Line Ready for Service on _____ (date) _____ (time)

Line Put Into Service on _____ (date) _____ (time)

Owner's Representative _____

Contractor's Representative _____

S&W Form 88B

END OF SECTION

FLUSHING AND TESTING OF WATER LINES
TABULATION SHEET

Job No. 10209.50 Location Town of LeRoy, Genesee County, NY
Contract No. 004327 Contractor Milherst Construction
Project Lehigh Valley Rail Road Derailment

FLUSHING

Date 5/7/02 Weather P.C. → O.C. Temperature 65°
Section Flushed 8983 ft. of 12/8-inch diameter pipe
Line Flushed 4 hrs. 0 min. @ 700 gal/min
Line Flushed Through ✓ Hydrant _____ -inch tap
Method of Measuring Flow (Visual)

PRESSURE AND LEAKAGE TESTING

Date 5/8/02 Weather Partly Cloudy Temperature 50°F
Section Tested Last 5' of LVRR Bed and all of Circular Hill Road
8983 ft. of 12-inch diameter DI pipe in 20-ft. laying lengths
Time Started 12:00pm Time Finished 1:00pm Elapsed Time 1 hour
Test Pressure: Start 150 psi Finish 150 psi
Allowable leakage, as calculated 0 gallons
Actual leakage 0 gallons

Pass ✓ Fail ___

Note: All gate valves pressure tested for 15 minutes.

$$L = \frac{SD\sqrt{P}}{133,200^*}$$

where:
L = Allowable leakage in gallons/hour
S = Length of pipe tested (linear feet)
D = Nominal diameter of pipe (inches)
P = Average pressure during test, psi

*Refer to C600 for additional allowance leakage against closed metal-seated valves.

Owner's Representative Michael W. Polek

Contractor's Representative _____

S&W Form #88A

FLUSHING AND TESTING OF WATER LINES
TABULATION SHEET

Job No. 10209.50 Location Town of LeRoy, Genesee County, NY
Contract No. D004327 Contractor Milherst Construction
Project Lehigh Valley Rail Road Derailment

FLUSHING

Date 5/7/02 Weather P.C. → O.C. Temperature 65°
Section Flushed 6,126 ft. of 12 -inch diameter pipe
Line Flushed 4 hrs. 0 min. @ 400 gal/min
Line Flushed Through ✓ Hydrant _____ -inch tap
Method of Measuring Flow (Visual)

PRESSURE AND LEAKAGE TESTING

Date 5/8/02 Weather Partly Cloudy Temperature 44°F
Section Tested LVRR Bed STA -0+06 → STA 61+20
6,126 ft. of 12 -inch diameter DI pipe in 20 -ft. laying lengths
Time Started 9:45AM Time Finished 10:45AM Elapsed Time 1 hour
Test Pressure: Start 150 psi Finish 150 psi
Allowable leakage, as calculated 0 gallons
Actual leakage 0 gallons

Pass ✓ Fail ___

Note: All gate valves pressure tested for 15 minutes.

$$L = \frac{SD\sqrt{P}}{133{,}200^*}$$

where:
L = Allowable leakage in gallons/hour
S = Length of pipe tested (linear feet)
D = Nominal diameter of pipe (inches)
P = Average pressure during test, psi

*Refer to C600 for additional allowance leakage against closed metal-seated valves.

Owner's Representative Michael W. Polek
Contractor's Representative Carl Polec

S&W Form #88A

FLUSHING AND TESTING OF WATER LINES
TABULATION SHEET

Job No. 10209.50 Location Town of LeRoy, NY
Contract No. D004327 Contractor Milherst Construction
Project Lehigh Valley R.R. Derailment

FLUSHING

Date 5/15/02 Weather Sunny Temperature high 50's
Section Flushed 216 ft. of 12-inch diameter pipe
Line Flushed 2 hrs. 0 min. @ 300 gal/min
Line Flushed Through ✓ Hydrant _____ -inch tap
Method of Measuring Flow (Visual)

PRESSURE AND LEAKAGE TESTING

Date 5/16/02 Weather Mostly Cloudy Temperature 60°F
Section Tested North Street STA 0+06 → STA 2+22
216 ft. of 12-inch diameter DI pipe in 20-ft. laying lengths
Time Started 2:30pm Time Finished 3:30pm Elapsed Time 1 hour
Test Pressure: Start 152 psi Finish 152 psi
Allowable leakage, as calculated 0 gallons
Actual leakage 0 gallons

Pass ✓ Fail ___ Note: All gate valves pressure tested for 15 minutes.

$$L = \frac{SD\sqrt{P}}{133{,}200^*}$$

where:
L = Allowable leakage in gallons/hour
S = Length of pipe tested (linear feet)
D = Nominal diameter of pipe (inches)
P = Average pressure during test, psi

*Refer to C600 for additional allowance leakage against closed metal-seated valves.

Owner's Representative _____

Contractor's Representative _____

S&W Form #88A

FLUSHING AND TESTING OF WATER LINES
TABULATION SHEET

Job No. 10209.50 Location Town of LeRoy, Genesee County, NY
Contract No. D004327 Contractor Milherst Construction
Project Lehigh Valley R.R. Realignment Site

FLUSHING

Date 6/26, 6/27/02 Weather Sunny & Muggy. Temperature Low 80's
Section Flushed 5184.5 ft. of 12 -inch diameter pipe
Line Flushed 10 hrs. 0 min. @ 400 gal/min
Line Flushed Through ✓ Hydrant _____ -inch tap
Method of Measuring Flow Visual

PRESSURE AND LEAKAGE TESTING

Date 6/28/02 Weather Sunny & Very Hot Temperature Low 80's
Section Tested NYS Rt. 5: STA 0+09 → STA 51+24.5; Church Rd: STA 0+00 → STA 0+12.5
5184.5 ft. of 12 -inch diameter DI pipe in 20 -ft. laying lengths
Time Started 12:50pm Time Finished 1:50pm Elapsed Time 1 hour
Test Pressure: Start 150 psi Finish 150 psi
Allowable leakage, as calculated 0 gallons
Actual leakage 0 gallons

Pass ✓ Fail ____

$$L = \frac{SD\sqrt{P}}{133{,}200^*}$$

where:
L = Allowable leakage in gallons/hour
S = Length of pipe tested (linear feet)
D = Nominal diameter of pipe (inches)
P = Average pressure during test, psi

*Refer to C600 for additional allowance leakage against closed metal-seated valves.

Owner's Representative Michael W. Polek
Contractor's Representative [signature]

Note: All gate valves (excluding Pressure Reducing Valve Vault "B" yard valves) individually pressure tested @ 150 psi for 15 minutes.

S&W Form #88A

FLUSHING AND TESTING OF WATER LINES
TABULATION SHEET

Job No. 10209.50 Location Genesee County, Town of LeRoy
Contract No. ~~10242~~ Contractor Milherst Construction, Inc.
Project Lehigh Valley R.R. Derailment Site

FLUSHING

Date 07/01/02 Weather Sunny & Hot. Temperature 90°
Section Flushed 2833 ft. of 12 -inch diameter pipe
Line Flushed 2 hrs. 30 min. @ 400 gal/min
Line Flushed Through ✓ Hydrant _____ -inch tap
Method of Measuring Flow Visual

PRESSURE AND LEAKAGE TESTING

Date 07/02/02 Weather Sunny & Hot Temperature 90's
Section Tested NYS-RT. 5 STA. 51+24.5 → STA. 79+57.5
2833 ft. of 12 -inch diameter DI pipe in 20-ft. laying lengths
Time Started 9:00A Time Finished 10:00A Elapsed Time 1-hr.
Test Pressure: Start 151 psi Finish 151 psi
Allowable leakage, as calculated 0 gallons
Actual leakage 0 gallons

Pass ✓ Fail ____ Note; Following above test, all Gate Valves were pressure tested, individually, for a period of 15 min.(ea.)

$$L = \frac{SD\sqrt{P}}{133,200^*}$$

where:

L = Allowable leakage in gallons/hour
S = Length of pipe tested (linear feet)
D = Nominal diameter of pipe (inches)
P = Average pressure during test, psi

*Refer to C600 for additional allowance leakage against closed metal-seated valves.

Owner's Representative Frank A. Esposito

Contractor's Representative _____

S&W Form #88A

FLUSHING AND TESTING OF WATER LINES
TABULATION SHEET

Job No. 10209.50 Location Town of LeRoy, Genesee County & Town of Caledonia, Livingston County
Contract No. D004337 Contractor Milherst Construction
Project Lehigh Valley Rail Road Derailment Site

FLUSHING

Date 7/10/02 Weather Sunny & Mild Temperature Mid 70's
Section Flushed 4,715 ft. of 12 -inch diameter pipe
Line Flushed 3 hrs. 30 min. @ 400 gal/min
Line Flushed Through ✓ Hydrant _____ -inch tap
Method of Measuring Flow Visual

PRESSURE AND LEAKAGE TESTING

Date 7/11/02 Weather Sunny w/slight breeze Temperature Mid 70's
Section Tested NYS Rt. 5: Gate Valve @ STA 74+57.5 → Gate Valve @ STA 126+72.5
4,715 ft. of 12 -inch diameter DI pipe in 20 -ft. laying lengths
Time Started 10:10AM Time Finished 11:10AM Elapsed Time 1 hour
Test Pressure: Start 150 psi Finish 150 psi
Allowable leakage, as calculated 0 gallons
Actual leakage 0 gallons

Pass ✓ Fail ____

$$L = \frac{SD\sqrt{P}}{133{,}200^*}$$

where:
L = Allowable leakage in gallons/hour
S = Length of pipe tested (linear feet)
D = Nominal diameter of pipe (inches)
P = Average pressure during test, psi

*Refer to C600 for additional allowance leakage against closed metal-seated valves.

Owner's Representative Michael W. Polek
Contractor's Representative [signature]

Note: All gate valves individually pressure tested @ 150 psi for 15 minutes.

S&W Form #88A

FLUSHING AND TESTING OF WATER LINES
TABULATION SHEET

Job No. 10209.50 Location Monroe County (Flint Hill & Limerock Rd.)
Contract No. 000432 Contractor Millherst Construction, Inc.
Project Lehigh Valley R.R. Derailment Site

FLUSHING

Date 08/09/02 Weather Sunny Temperature 77°
Section Flushed 4424.5 ft. of 8 -inch diameter pipe
Line Flushed > 2 hrs. 0 min. @ 400 gal/min
Line Flushed Through ✓ Hydrant _____ -inch tap
Method of Measuring Flow Visual

PRESSURE AND LEAKAGE TESTING

Date 08/12/02 Weather Hot & Sunny Temperature 90°
Section Tested Flint Hill Rd. & Limerock Rd. sections
4424.5 ft. of 8 -inch diameter DI pipe in 20-ft. laying lengths
Time Started 10:30A Time Finished 11:30A Elapsed Time 1-hr.
Test Pressure: Start 155 psi Finish 155 psi
Allowable leakage, as calculated 0 gallons
Actual leakage 0 gallons

Pass ✓ Fail ____

Flint Hill - STA. 63+99 → STA. 46+46.5 - 1752.5'
Limerock - STA. 35+06 → STA. 8+39 - 2672'

$$L = \frac{SD\sqrt{P}}{133{,}200^*}$$

* Following the above pressure test, in-line Gate Valves subject to individual testing - 15 min. each.

where:
L = Allowable leakage in gallons/hour
S = Length of pipe tested (linear feet)
D = Nominal diameter of pipe (inches)
P = Average pressure during test, psi

*Refer to C600 for additional allowance leakage against closed metal-seated valves.

Owner's Representative _____

Contractor's Representative _____

S&W Form #88A

FLUSHING AND TESTING OF WATER LINES
TABULATION SHEET

Monroe County (Limerock Rd.)
Job No. 10209.50 Location Livingston County (Flint Hill Rd.)
Contract No. D00432 Contractor Millerest Construction, Inc.
Project Lehigh Valley R.R. Derailment Site

FLUSHING

Date 08/09/02 Weather Sunny Temperature 77°
Section Flushed 4920 ✓ ft. of 8 -inch diameter pipe
Line Flushed >2 hrs. 0 min. @ 400 gal/min
Line Flushed Through ✓ Hydrant _____ -inch tap
Method of Measuring Flow Visual

PRESSURE AND LEAKAGE TESTING

Date 08/12/02 Weather Hot & Sunny Temperature 90's
Section Tested Flint Hill Rd. & Limerock Rd. sections
4920 ft. of 8 -inch diameter DI pipe in 20-ft. laying lengths
Time Started 1:30P Time Finished 2:30P Elapsed Time 1-hr.
Test Pressure: Start 150 psi Finish 150 psi
Allowable leakage, as calculated 0 gallons
Actual leakage 0 gallons

Pass ___ Fail ___

Flint Hill - STA. 0+04 → STA. 40+40 - 4036'
Limerock - STA. 0+00 → STA. 8+34 - 834'

$$L = \frac{SD\sqrt{P}}{133{,}200^*}$$

* Following the above press. test, in-line Gate Valves were subject to individual press. test for period of 15 min. each.

where:

L = Allowable leakage in gallons/hour
S = Length of pipe tested (linear feet)
D = Nominal diameter of pipe (inches)
P = Average pressure during test, psi

*Refer to C600 for additional allowance leakage against closed metal-seated valves.

Owner's Representative Mark A. Gulla

Contractor's Representative _____

S&W Form #88A

FLUSHING AND TESTING OF WATER LINES
TABULATION SHEET

Job No. 10209.50 Location Genesee County (Gulf Rd.)
Contract No. [illegible] Contractor Milherst Construction, Inc.
Project Lehigh Valley R.R. Derailment Site

FLUSHING

Date 08/23/02 Weather Cloudy Temperature mid 70's
Section Flushed 6149 ✓ ft. of 8 -inch diameter pipe
Line Flushed > 2 hrs. 0 min. @ 400 gal/min
Line Flushed Through ✓ Hydrant _____ -inch tap
Method of Measuring Flow Visual

PRESSURE AND LEAKAGE TESTING

Date 08/26/02 Weather Sunny Temperature 80's
Section Tested Gulf Rd. from Monroe-Gen. City Line → end (west)
6149 ft. of 8 -inch diameter DI pipe in 20-ft. laying lengths
Time Started 9:00A Time Finished 10:00A Elapsed Time 1-hr.
Test Pressure: Start 152 psi Finish 152 psi
Allowable leakage, as calculated 0 gallons
Actual leakage 0 gallons

Pass ✓ Fail ___

Following the above pressure test, in-line Gate Valves were subject to individual pressure testing for period of 15 min. each.

$$L = \frac{SD\sqrt{P}}{133,200*}$$

where:
L = Allowable leakage in gallons/hour
S = Length of pipe tested (linear feet)
D = Nominal diameter of pipe (inches)
P = Average pressure during test, psi

*Refer to C600 for additional allowance leakage against closed metal-seated valves.

Owner's Representative [signature]

Contractor's Representative _____

S&W Form #88A

FLUSHING AND TESTING OF WATER LINES
TABULATION SHEET

Job No. 10209.50 Location Monroe County (Flint Hill Rd.)
Contract No. D004327 Contractor Milherst Construction, Inc.
Project Lehigh Valley R.R. Derailment Site

FLUSHING

Date 08/29/02 Weather Cloudy Temperature 70°
Section Flushed 4646.5 ft. of 8 -inch diameter pipe
Line Flushed > 2 hrs. 0 min. @ 400 gal/min
Line Flushed Through ✓ Hydrant _____ -inch tap
Method of Measuring Flow Visual

PRESSURE AND LEAKAGE TESTING

Date 08/30/02 Weather Sunny Temperature mid 70's
Section Tested Monroe-Gen. Cty. line → Limerock Rd. intersect.
4646.5 ft. of 8 -inch diameter DI pipe in 20-ft. laying lengths
Time Started 11:00A Time Finished 12:00P Elapsed Time 1-hr.
Test Pressure: Start 150 psi Finish 150 psi
Allowable leakage, as calculated 0 gallons
Actual leakage 0 gallons

Pass ____ Fail ____

Following the above pressure test, in-line Gate Valves were subject to individual pressure testing for period of 15 min. each.

$$L = \frac{SD\sqrt{P}}{133{,}200^*}$$

where:

L = Allowable leakage in gallons/hour
S = Length of pipe tested (linear feet)
D = Nominal diameter of pipe (inches)
P = Average pressure during test, psi

*Refer to C600 for additional allowance leakage against closed metal-seated valves.

Owner's Representative Mark A. Sgella

Contractor's Representative _____

S&W Form #88A

MILHERST CONSTRUCTION, INC.
2601 Millersport Highway
P.O. Box 631
Getzville, New York 14068-0631

(716) 688-9098 FAX (716) 688-9562

LETTER OF TRANSMITTAL

Date:	Job Number:
Nov. 25, 2002	01126

Attention: Titus J. Falkenburg, P.E.

RECEIVED
STEARNS & WHEELER, L.L.C.
NOV 27 2002

TO: Stearns & Wheeler, LLC
One Remington Park Drive
Cazenovia, NY 13035

(315) 655-8161

Reference:
Site No. 8-19-014
Lehigh Valley Railroad Derailment Site
Town of Leroy, Genesee County
Remedial Construction Contract D004327

WE ARE SENDING YOU: ☒ Attached ☐ Under separate cover via _____

☐ Shop Drawings ☐ Prints ☐ Plans ☐ Samples ☐ Specifications

☐ Copy of Letter ☐ Change Order ☐ _____

COPIES	NO.	DESCRIPTION
6	1	Concrete Field Observation Report – 2 cylinders – 9/12/02
6	2	Concrete Field Observation Report – 2 cylinders – 9/23/02

THESE ARE TRANSMITTED as checked below:

☐ For approval ☐ Approved as submitted ☐ Resubmit

☒ For your use ☐ Approved as noted ☐ Submit

☐ As requested ☐ Return for corrections ☐ Return

☐ For Bids Due _____ ☐ Prints returned after loan to us.

COPY TO: _____ By: Charles F. Kubiniec

Charles F. Kubiniec
Project Manager

SJB SERVICES, INC.
Contract Drilling and Testing

ROCHESTER OFFICE
535 Summit Point Drive
Henrietta, NY 14467

Phone: (585)359-2730
Fax: (585)359-9668

CONCRETE FIELD OBSERVATION REPORT

Project:	MILHERST CONSTRUCTION	Location:	ROCHESTER, NEW YORK
Client:	MILHERST CONSTRUCTION	Report No.:	C-01
Contractor:	N/A	Project No.:	RT-02-270
Weather:	N/A	Date:	08/15/02
Supplier:	N/A	Air Temp.:	AM PM
Mix No.:	N/A	Sheet:	1 OF 1

General Placement Location: LEROY AIRPORT: MUD CREEK

Load No.	Ticket No.	Truck No.	Cubic Yards	TIME			WATER DATA (gal.) / yd.				Slump (in.)	% Air	Conc. Temp. °F	Specimen Set No./Remarks
				Batched	Start Discharge	Empty	In Agg.	Added: Plant + Field	Actual Total	Design Total				
-	CLIENT MADE CYLINDERS												-	RT-02-270-01
							ASTM Procedures				C143	C231	C1064	

REMARKS: CLIENT MADE CYLINDERS

CUBIC YARDS PLACED: N/A REJECTED: N/A TECHNICIAN: CLIENT MADE CYLINDERS

COMPRESSIVE STRENGTH DATA

Set No.	Lab No.	Cylinder Diameter	Area	Date Tested	Age (Days)	Load (lbs.)	Fracture Type	Compressive Strength (psi)
1	1	6"	28.3	09-12-02	28	106,920		3,780
	2	6"	28.3	09-12-02	28	110,510		3,910
Specification Requirement at 28 days								

FIELD DATA BY: SJB SERVICES, INC.

TRANSPORTATION BY: SJB SERVICES, INC.

DATE RECEIVED: 8/16/02

Cylinder Size: 6" x 12" unless otherwise noted
Sampled in accord with ASTM C172
Tested in accord with ASTM C39
Cast in Accord with ASTM C31

Fracture Type:
A = Cone
B = Cone and Split
C = Cone and Shear
D = Shear
E = Columnar

Respectfully Submitted,
SJB SERVICES, INC.

SJB SERVICES, INC.

Contract Drilling and Testing

ROCHESTER OFFICE
535 Summit Point Drive
Henrietta, NY 14467

Phone: (585)359-2730
Fax: (585)359-9668

CONCRETE FIELD OBSERVATION REPORT

Project:	MILHERST CONSTRUCTION	Location:	ROCHESTER, NEW YORK
Client:	MILHERST CONSTRUCTION	Report No.:	C-02
Contractor:	N/A	Project No.:	RT-02-270
Weather:	N/A	Date:	08/26/02
Supplier:	N/A	Air Temp.:	AM PM
Mix No.:	N/A	Sheet:	1 OF 1

General Placement Location: LEROY AIRPORT: GEORGE STREET

Load No.	Ticket No.	Truck No.	Cubic Yards	TIME: Batched	TIME: Start Discharge	TIME: Empty	WATER DATA (gal.) / yd.: In Agg.	Added: Plant + Field	Actual Total	Design Total	Slump (in.)	% Air	Conc. Temp. °F	Specimen Set No./Remarks
-	CLIENT MADE CYLINDERS												-	RT-02-270-02
							ASTM Procedures				C143	C231	C1064	

REMARKS: CLIENT MADE CYLINDERS

CUBIC YARDS PLACED: N/A REJECTED: N/A TECHNICIAN: CLIENT MADE CYLINDERS

COMPRESSIVE STRENGTH DATA

Set No.	Lab No.	Cylinder Diameter	Area	Date Tested	Age (Days)	Load (lbs.)	Fracture Type	Compressive Strength (psi)
2	1	6"	28.3	09-23-02	28	136,430		4,830
	2	6"	28.3	09-23-02	28	141,010		4,990
Specification Requirement at 28 days								

FIELD DATA BY: SJB SERVICES, INC.

TRANSPORTATION BY: SJB SERVICES, INC.

DATE RECEIVED: 8/27/02

Cylinder Size: 6" x 12" unless otherwise noted
Sampled in accord with ASTM C172
Tested in accord with ASTM C39
Cast in Accord with ASTM C31

Fracture Type:
A = Cone
B = Cone and Split
C = Cone and Shear
D = Shear
E = Columnar

Respectfully Submitted,
SJB SERVICES, INC.

MILHERST CONSTRUCTION, INC.
2601 Millersport Highway
P.O. Box 631
Getzville, New York 14068-0631

(716) 688-9098 FAX (716) 688-9562

LETTER OF TRANSMITTAL

Date:	Job Number:
May 20, 2002	01126

Attention:
Titus J. Falkenburg, P.E.

RECEIVED
STEARNS & WHEELER L.
MAY 22 2002

Reference:
Site No. 8-19-014
Lehigh Valley Railroad Derailment Site
Town of Leroy, Genesee County
Remedial Construction Contract D004327

TO: Stearns & Wheeler, LLC
One Remington Park Drive
Cazenovia, NY 13035

(315) 655-8161

WE ARE SENDING YOU: ☒ Attached ☐ Under separate cover via _____

☐ Shop Drawings ☐ Prints ☐ Plans ☐ Samples ☐ Specifications

☐ Copy of Letter ☐ Change Order ☐

COPIES	NO.	DESCRIPTION
6	1	Concrete Field Report C-04.

THESE ARE TRANSMITTED as checked below:

☐ For approval ☐ Approved as submitted ☐ Resubmit

☒ For your use ☐ Approved as noted ☐ Submit

☐ As requested ☐ Return for corrections ☐ Return

☐ For Bids Due _____ ☐ Prints returned after loan to us.

COPY TO: Mike Cruden By: Charles F. Kubiniec

Charles F. Kubiniec
Project Manager

SJB SERVICES, INC.
Contract Drilling and Testing

ROCHESTER OFFICE
535 Summit Point Drive
Henrietta, NY 14467

Phone: (585)359-2730
Fax: (585)359-9668

LETTER OF TRANSMITTAL

DATE: 05/17/02 JOB NO. RT-02-072

To: MILHERST CONSTRUCTION, INC.
P.O. BOX 631/ 2601 MILLERSPORT HGWY
GETZVILLE, NEW YORK 14068

ATTENTION: CHIP KUBINIEC

REGARDING: LEHIGH VALLEY WATERLINE
MUMFORD, NEW YORK

WE ARE SENDING YOU X Attached ____ Under separate cover the following items:

COPIES	DATE	NO.	DESCRIPTION
2	04/02/02	C-04	CONCRETE INSPECTION REPORT (28-DAY BREAKS)

MAY 20 2002

REMARKS

COPIES TO:

SIGNED: RENEE STILES

SJB SERVICES, INC.
Contract Drilling and Testing

ROCHESTER OFFICE
535 Summit Point Drive
Henrietta, NY 14467

Phone: (585)359-2730
Fax: (585)359-9668

CONCRETE FIELD OBSERVATION REPORT

Project:	LEHIGH VALLEY WATERLINE	Location:	MUMFORD, NEW YORK
Client:	MILHURST CONSTRUCTION	Report No.:	C-04
Contractor:	MILHURST CONSTRUCTION	Project No.:	RT-02-072
Weather:	N/A	Date:	04/02/02
Supplier:	N/A	Air Temp.:	AM PM
Mix No.:	N/A	Sheet:	1 OF 1

General Placement Location: CLIENT MADE CYLINDERS

Load No.	Ticket No. 482	Truck No.	Cubic Yards	TIME Batched	TIME Start Discharge	TIME Empty	WATER DATA (gal.) / yd. In Agg.	Added: Plant + Field	Actual Total	Design Total	Slump (in.)	% Air	Conc. Temp. °F	Specimen Set No./Remarks
														RT-02-072-04
							ASTM Procedures				C143	C231	C1064	

REMARKS.

CUBIC YARDS PLACED: N/A REJECTED: N/A TECHNICIAN: CLIENT MADE CYLINDERS

COMPRESSIVE STRENGTH DATA

Set No.	Lab No.	Cylinder Diameter	UNIT WEIGHT	Date Tested	Age (Days)	Load (lbs.)	Fracture Type	Compressive Strength (psi)
4	1	6.0	145.6	04-30-02	28	139,480	B	4,930
	2	6.0	145.4	04-30-02	28	131,560	B	4,650
Specification Requirement at 28 days								4000

FIELD DATA BY:
SJB SERVICES, INC.

TRANSPORTATION BY:
SJB SERVICES, INC

DATE RECEIVED:

Cylinder Size: 6" x 12" unless otherwise noted
Sampled in accord with ASTM C172
Tested in accord with ASTM C39
Cast in Accord with ASTM C31

Fracture Tupe:
A = Cone
B = Cone and Split
C = Cone and Shear
D = Shear
E = Columnar

Respectfully Submitted,
SJB SERVICES, INC.

MILHERST CONSTRUCTION, INC.
2601 Millersport Highway
P.O. Box 631
Getzville, New York 14068-0631

(716) 688-9098 FAX (716) 688-9562

LETTER OF TRANSMITTAL

Date:	Job Number:
April 23, 2002	01126

RECEIVED
STEARNS & WHEELER L.L.C.
APR 25 2002

Attention:
Titus J. Falkenburg, P.E.

Reference:
Site No. 8-19-014
Lehigh Valley Railroad Derailment Site
Town of Leroy, Genesee County
Remedial Construction Contract D004327

TO: Stearns & Wheeler, LLC
One Remington Park Drive
Cazenovia, NY 13035

(315) 655-8161

WE ARE SENDING YOU: ☒ Attached ☐ Under separate cover via _____

☐ Shop Drawings ☐ Prints ☐ Plans ☐ Samples ☐ Specifications

☐ Copy of Letter ☐ Change Order ☒ CONCRETE REPORTS

COPIES	NO.	DESCRIPTION
6	1	Cylinder Test Report C-03

THESE ARE TRANSMITTED as checked below:

☐ For approval ☐ Approved as submitted ☐ Resubmit

☒ For your use ☐ Approved as noted ☐ Submit

☐ As requested ☐ Return for corrections ☐ Return

☐ For Bids Due _____ ☐ Prints returned after loan to us.

COPY TO: M.Cruden By: Charles F. Kubiniec

Charles F. Kubiniec
Project Manager

Contract Drilling and Testing

SJB SERVICES, INC.

ROCHESTER OFFICE
535 Summit Point Drive
Henrietta, NY 14467

Phone: (585)359-2730
Fax: (585)359-9668

CONCRETE FIELD OBSERVATION REPORT

Project:	LEHIGH VALLEY WATERLINE	Location:	MUMFORD, NEW YORK
Client:	MILHURST CONSTRUCTION	Report No.:	C-03
Contractor:	MILHURST CONSTRUCTION	Project No.:	RT-02-072
Weather:	N/A	Date:	03/15/02
Supplier:	MADE IN SMALL BATCHES ON SITE	Air Temp.:	AM PM
Mix No.:	N/A	Sheet:	1 OF 1

General Placement Location: N/A

Load No.	Ticket No. 482	Truck No.	Cubic Yards	TIME Batched	TIME Start Discharge	TIME Empty	WATER DATA (gal.) / yd. In Agg.	Added: Plant + Field	Actual Total	Design Total	Slump (in.)	% Air	Conc. Temp. °F	Specimen Set No./Remarks
1	-	-	-	-	-	-	-	-	-	-	-	-	-	RT-02-072-03
							ASTM Procedures				C143	C231	C1064	

REMARKS: CLIENT MADE CYLINDERS

CUBIC YARDS PLACED: N/A REJECTED: N/A TECHNICIAN: CLIENT MADE

COMPRESSIVE STRENGTH DATA

Set No.	Lab No.	Cylinder Diameter	Area	Date Tested	Age (Days)	Load (lbs.)	Fracture Type	Compressive Strength (psi)
1	1	6"		04-12-02	28	87,620		3,100
	2	6"		04-12-02	28	89,650		3,170
Specification Requirement at 28 days								

FIELD DATA BY:
SJB SERVICES, INC.

DATE RECEIVED:
3/15/02

Cylinder Size: 6" x 12" unless otherwise noted
Sampled in accord with ASTM C172
Tested in accord with ASTM C39
Cast in Accord with ASTM C31

Fracture Tupe:
A = Cone
B = Cone and Split
C = Cone and Shear
D = Shear
E = Columnar

Respectfully Submitted,
SJB SERVICES, INC.

MILHERST CONSTRUCTION, INC.
2601 Millersport Highway
P.O. Box 631
Getzville, New York 14068-0631

(716) 688-9098 FAX (716) 688-9562

LETTER OF TRANSMITTAL

Date:	Job Number:
April 17, 2002	01126

Attention:
Titus J. Falkenburg, P.E.

Reference:
Site No. 8-19-014
Lehigh Valley Railroad Derailment Site
Town of Leroy, Genesee County
Remedial Construction Contract D004327

TO: Stearns & Wheeler, LLC
One Remington Park Drive
Cazenovia, NY 13035

(315) 655-8161

WE ARE SENDING YOU: ☒ Attached ☐ Under separate cover via _____

☐ Shop Drawings ☐ Prints ☐ Plans ☐ Samples ☐ Specifications

☐ Copy of Letter ☐ Change Order ☒ CONCRETE REPORTS

COPIES	NO.	DESCRIPTION
6	1	Cylinder Test Report C-01
6	2	Cylinder Test Report C-02

THESE ARE TRANSMITTED as checked below:

☐ For approval ☐ Approved as submitted ☐ Resubmit

☒ For your use ☐ Approved as noted ☐ Submit

☐ As requested ☐ Return for corrections ☐ Return

☐ For Bids Due _____ ☐ Prints returned after loan to us.

COPY TO: M.Cruden By: Charles F. Kubiniec

Charles F. Kubiniec
Project Manager

SJB SERVICES, INC.
Contract Drilling and Testing

ROCHESTER OFFICE
535 Summit Point Drive
Henrietta, NY 14467

Phone: (585)359-2730
Fax: (585)359-9668

CONCRETE FIELD OBSERVATION REPORT

Project:	LEHIGH VALLEY WATERLINE	Location:	MUMFORD, NEW YORK
Client:	MILHURST CONSTRUCTION	Report No.:	C-01
Contractor:	MILHURST CONSTRUCTION	Project No.:	RT-02-072
Weather:	MADE IN SMALL BATCHES ON SITE	Date:	03/11/02
Supplier:	N/A	Air Temp.:	AM PM
Mix No.:	N/A	Sheet:	1 OF 1

General Placement Location: CLIENT MADE CYLINDERS

Load No.	Ticket No.	Truck No.	Cubic Yards	TIME			WATER DATA (gal.) / yd.				Slump (in.)	% Air	Conc. Temp. °F	Specimen Set No./Remarks
				Batched	Start Discharge	Empty	In Agg.	Added: Plant + Field	Actual Total	Design Total				
1	-	-	-	-	-	-	-	-	-	-	-	-	-	RT-02-072-01
							ASTM Procedures				C143	C231	C1064	

REMARKS: CLIENT MADE CYLINDERS

CUBIC YARDS PLACED: N/A REJECTED: N/A TECHNICIAN: CLIENT MADE

COMPRESSIVE STRENGTH DATA

Set No.	Lab No.	Cylinder Diameter	Area	Date Tested	Age (Days)	Load (lbs.)	Fracture Type	Compressive Strength (psi)
1	1	6"		03-18-02	7	77,890		2,760
	2	6"		04-08-02	28	118,140		4,180
	3	6"		04-08-02	28	115,790		4,100
Specification Requirement at 28 days								

FIELD DATA BY:
SJB SERVICES, INC.

DATE RECEIVED:
3/14/02

Cylinder Size: 6" x 12" unless otherwise noted
Sampled in accord with ASTM C172
Tested in accord with ASTM C39
Cast in Accord with ASTM C31

Fracture Tupe:
A = Cone
B = Cone and Split
C = Cone and Shear
D = Shear
E = Columnar

Respectfully Submitted,
SJB SERVICES, INC.

SJB SERVICES, INC.
Contract Drilling and Testing

535 Summit Point Drive
Henrietta, NY 14467

Phone: (585)359-2730
Fax: (585)359-9668

CONCRETE FIELD OBSERVATION REPORT

Project:	LEHIGH VALLEY WATERLINE	Location:	MUMFORD, NEW YORK
Client:	MILHURST CONSTRUCTION	Report No.:	C-02
Contractor:	MILHURST CONSTRUCTION	Project No.:	RT-02-072
Weather:	N/A	Date:	3/14/2002
Supplier:	MADE IN SMALL BATCHES ON SITE	Air Temp.:	AM PM
Mix No.:	N/A	Sheet:	1 OF 1

General Placement Location: N/A

Load No.	Ticket No.	Truck No.	Cubic Yards	TIME			WATER DATA (gal.) / yd.				Slump (in.)	% Air	Conc. Temp. °F	Specimen Set No./Remarks
				Batched	Start Discharge	Empty	In Agg.	Added: Plant + Field	Actual Total	Design Total				
1	-	-	-	-	-	-	-	-	-	-	-	-	-	RT-02-072-02
							ASTM Procedures				C143	C231	C1064	

REMARKS: CLIENT MADE CYLINDERS

CUBIC YARDS PLACED: N/A REJECTED: N/A TECHNICIAN: CLIENT MADE

COMPRESSIVE STRENGTH DATA

Set No.	Lab No.	Cylinder Diameter	Area	Date Tested	Age (Days)	Load (lbs.)	Fracture Type	Compressive Strength (psi)
2	1	6"		04-11-02	28	112,990		4,000
pecification Requirement at 28 days								

FIELD DATA BY:
SJB SERVICES, INC.

DATE RECEIVED:
3/13/02

Cylinder Size: 6" x 12" unless otherwise noted
Sampled in accord with ASTM C172
Tested in accord with ASTM C39
Cast in Accord with ASTM C31

Fracture Tupe:
A = Cone
B = Cone and Split
C = Cone and Shear
D = Shear
E = Columnar

Respectfully Submitted,
SJB SERVICES, INC.

Individual Services

Table 1
Residential Services

Notes:
1. **Exterior Services - Contractor, Resident Engineer, and Homeowner shall layout all exterior water services in the field, except where detailed on plan sheets for commercial buildings. Details on exterior services are shown on sheet G-31.**
2. **Interior Services - Contractor, Resident Engineer, and Homeowner shall layout all interior water services in the field, except those detailed on sheet G-32. Details on interior services are also shown on sheet G-32.**
3. **Livingston County Only - All residential meters shall be located within each residence. If installation is not feasible, meter shall be installed within a meter pit.**

= changed or added from the original Contract Specifications

*B=Basement, 1F=Inside residence-1st Floor, Pit=Meter Pit, HE=Heated Enclosure, MH=Manhole
**RPZ=Reduced Pressure Zone, DCV=Double Check Valve, DualCV=Residential Dual Check Valve

Well #	Name	Address	Phone # (585)	Well Located	Abandon Well-?	Size of Water Service	Size of Water Meter	Location of Water Meter*	Size of Backflow Preventer	Location of Backflow Preventer*	Type of Backflow Preventer**	Location of Pressure Reducing Valve*
Genesee County												
G - 1	Northwoods Sportsmen's Club Attn: Dan Miller (716) 768-8837	8402 Gulf Road LeRoy, NY 14482	768-6110	Y	Y	1.5"	5/8"	Pit	1.5"	B	RPZ	B
G - 2	Robin Smith	8339 Gulf Road LeRoy, NY 14482	768-2356	Y	Y	1"	5/8"	B	-	-	-	B
G - 6	Mumford Sportman's Club	Gulf Road LeRoy, NY 14482		Y	Y	1.5"	5/8"	Pit	-	-	-	1F
G - 7	Margaret Tamasi	8825 Church Road LeRoy, NY 14482	768-6009	Y	N	1"	5/8"	B	1"	B	RPZ	B
G - 8	Leo Maxwell	8859 Church Road LeRoy, NY 14482	768-7616	Y	Y	1"	5/8"	B	-	-	-	B
G - 9	Thomas Yauchzee	8871 Church Road LeRoy, NY 14482	768-7688	Y	Y	1"	5/8"	B	-	-	-	B
G - 10	John Sickles	8875 Church Road LeRoy, NY 14482	768-4369	Y	Y	1"	5/8"	B	-	-	-	B
G - 11	Howard Baehr	8877 Church Road LeRoy, NY 14482	768-6391	Y	Y	1"	5/8"	B	-	-	-	B
G - 12	Wayne Fisher	8879 Church Road LeRoy, NY 14482	768-8232	Y	Y	1"	5/8"	B	-	-	-	B
G - 14	Margaret Fisher	8881 Church Road LeRoy, NY 14482	768-9220	Y	Y	1"	5/8"	B	-	-	-	B
Livingston County												
L - 1	Genesee Country Campground Attn: Kathrine Sims	P.O. Box 100 Caledonia, NY 14423	538-4200	Y	Y	4" & 2"	1"	1F	2"	1F	RPZ	1F

Table 1
Residential Services

Notes:
1. **Exterior Services - Contractor, Resident Engineer, and Homeowner shall layout all exterior water services in the field, except where detailed on plan sheets for commercial buildings. Details on exterior services are shown on sheet G-31.**
2. **Interior Services - Contractor, Resident Engineer, and Homeowner shall layout all interior water services in the field, except those detailed on sheet G-32. Details on interior services are also shown on sheet G-32.**
3. **Livingston County Only - All residential meters shall be located within each residence. If installation is not feasible, meter shall be installed within a meter pit.**

= changed or added from the original Contract Specifications

*B=Basement, 1F=Inside residence-1st Floor, Pit=Meter Pit, HE=Heated Enclosure, MH=Manhole
**RPZ=Reduced Pressure Zone, DCV=Double Check Valve, DualCV=Residential Dual Check Valve

Well #	Name	Address	Phone # (585)	Well Located	Abandon Well-?	Size of Water Service	Size of Water Meter	Location of Water Meter*	Size of Backflow Preventer	Location of Backflow Preventer*	Type of Backflow Preventer**	Location of Pressure Reducing Valve*
L - 2	Gunsmoke Saloon Attn: Edward Fosdick	2577 Caledonia-LeRoy Road Caledonia, NY 14423	538-2950	Y	Y	1.5"	5/8"	1F	1.5"	1F	DCV	1F
L - 4	Preferred Electric Motors Attn: Murray Alent	2521 Caledonia-LeRoy Road Caledonia, NY 14423	538-2760	Y	N	1"	5/8"	1F	1"	1F	RPZ	1F
L - 6	Burnwell Gas Distributor c/o Seimax Gas Attn: Brent Darch	2672 Caledonia-LeRoy Road Caledonia, NY 14423	538-2162	Y	Y	1.5"	5/8"	1F	1.5"	1F	RPZ	1F
L - 7	P.J.'s Auto Parts Attn: Bill Jones	2700 West Main Street Caledonia, NY 14423	538-2391	Shares	-	1"	5/8"	Pit	1"	HE	RPZ	HE
		2708 West Main Street Caledonia, NY 14423	538-2391	Y	Y	1"	5/8"	Pit	-	-	-	Pit
L - 8	Caledonia Garage Attn: Russell Barber	2792 West Main Street Caledonia, NY 14423	538-2890	Y	Y	1"	5/8"	1F	1"	1F	RPZ	1F
L - 9	P.J.'s Mobile Home Park Attn: Bill Jones (716) 538-2391	Single Service for all mobil homes Separate service with meter to each home		Y	Y	2"	1"	Pit	-	-	-	MH
		2684 West Main Street Caledonia, NY 14423	?	Shares	-	1"	5/8"	MH	-	-	-	-
		2686 West Main Street Caledonia, NY 14423	?	Shares	-	1"	5/8"	MH	-	-	-	-
		2688 West Main Street Caledonia, NY 14423	?	Shares	-	1"	5/8"	MH	-	-	-	-
		2690 West Main Street Caledonia, NY 14423	?	Shares	-	1"	5/8"	MH	-	-	-	-
L - 10	Norman Sheffer	212 McIntyre Road LeRoy, NY 14482	538-9358	Y	Y	1"	5/8"	Pit	-	-	-	Pit

Table 1
Residential Services

Notes: 1. **Exterior Services - Contractor, Resident Engineer, and Homeowner shall layout all exterior water services in the field, except where detailed on plan sheets for commercial buildings. Details on exterior services are shown on sheet G-31.**
2. **Interior Services - Contractor, Resident Engineer, and Homeowner shall layout all interior water services in the field, except those detailed on sheet G-32. Details on interior services are also shown on sheet G-32.**
3. **Livingston County Only - All residential meters shall be located within each residence. If installation is not feasible, meter shall be installed within a meter pit.**

= changed or added from the original Contract Specifications

*B=Basement, 1F=Inside residence-1st Floor, Pit=Meter Pit, HE=Heated Enclosure, MH=Manhole
**RPZ=Reduced Pressure Zone, DCV=Double Check Valve, DualCV=Residential Dual Check Valve

Well #	Name	Address	Phone # (585)	Well Located	Abandon Well-?	Size of Water Service	Size of Water Meter	Location of Water Meter*	Size of Backflow Preventer	Location of Backflow Preventer*	Type of Backflow Preventer**	Location of Pressure Reducing Valve*
L - 11	Elizabeth Redman	2513 Caledonia-LeRoy Road Caledonia, NY 14423	538-4733	Y	Y	1"	5/8"	B	1"	1F	DualCV	B
L - 11A	Christine Kuhn	2511 Caledonia-LeRoy Road Caledonia, NY 14423	359-9606	Y	Y	1"	5/8"	1F	1"	1F	DualCV	1F
L - 12	Gerald Robinson	2397 Caledonia-LeRoy Road Caledonia, NY 14423	?	Y	N	No water service hook up			-	-	-	-
L-13	TSS Foam Industries Attn: Sam Diliberto	2770 West Main Street Caledonia, NY 14423	538-2321	Y	Y	1.5"	5/8"	1F	1.5"	1F	RPZ	1F
L-14	Lime Rock Speedway Attn: Robert Kelly 2140 Casey Road Caledonia, NY 14423 (716) 226-8987	Lime Rock Road Caledonia, NY 14423	226-2681	Y	N	2"	1"	MH	2"	1F	RPZ	1F
L - 15	Russ Smith	232 McIntyre Road LeRoy, NY 14482	538-6096	Y	Y	1"	5/8"	Pit	-	-	-	Pit
L - 17	Robert McCombs	2830 West Main Street Caledonia, NY 14423	538-2363	Y	Y	1"	5/8"	B	1"	B	DualCV	B
L - 18	Raymond Anne	2837 West Main Street Caledonia, NY 14423	538-9614	Y	Y	1"	5/8"	1F	1"	B	DualCV	B
	Raymond Anne	2857 West Main Street Caledonia, NY 14423	538-9614	Shares	-	1"	5/8"	Pit	-	-	-	Pit
L - 19	Pattie Duran	2403 West Main Street Caledonia, NY 14423	538-9607	Y	Y	1.5"	5/8"	Pit	1"	1F	DualCV	1F
	Don Green	2401 West Main Street Caledonia, NY 14423	538-2427	Shares	-	1.5"	5/8"	Pit	-	-	-	Pit
L - 23	"Barn" next to 165 Spring Street	153 Spring Street Caledonia, NY 14423	?	Y	Y	1"	5/8"	1F	1"	1F	DualCV	1F

Table 1
Residential Services

Notes:
1. **Exterior Services - Contractor, Resident Engineer, and Homeowner shall layout all exterior water services in the field, except where detailed on plan sheets for commercial buildings. Details on exterior services are shown on sheet G-31.**
2. **Interior Services - Contractor, Resident Engineer, and Homeowner shall layout all interior water services in the field, except those detailed on sheet G-32. Details on interior services are also shown on sheet G-32.**
3. **Livingston County Only - All residential meters shall be located within each residence. If installation is not feasible, meter shall be installed within a meter pit.**

= changed or added from the original Contract Specifications

*B=Basement, 1F=Inside residence-1st Floor, Pit=Meter Pit, HE=Heated Enclosure, MH=Manhole
**RPZ=Reduced Pressure Zone, DCV=Double Check Valve, DualCV=Residential Dual Check Valve

Well #	Name	Address	Phone # (585)	Well Located	Abandon Well-?	Size of Water Service	Size of Water Meter	Location of Water Meter*	Size of Backflow Preventer	Location of Backflow Preventer*	Type of Backflow Preventer**	Location of Pressure Reducing Valve*
L - 25	Jeffery Green	203 Spring Street Caledonia, NY 14423	538-2852 729-8221(m)	Y	Y	1"	5/8"	B	1"	B	DualCV	B
L - 26	Gilbert DuBois	28 Spring Street Caledonia, NY 14423	538-4677	Y	Y	1"	5/8"	B	1"	B	DualCV	B
L - 27	Wayne Stack	18 Spring Street Caledonia, NY 14423	538-2087	Y	Y	1"	5/8"	B	1"	B	DualCV	B
L - 28	Jeff Ravich	165 Spring Street Caledonia, NY 14423	538-9393	Y	Y	1.5"	1"	B	1.5"	B	DualCV	B
L - 30	Jack MacKay	200 Spring Street Caledonia, NY 14423	538-4332	Y	Y	1"	5/8"	Pit	1"	B	DualCV	B
L - 31	Ron Roth	133 Spring Street Caledonia, NY 14423	538-4475	Well Location Unknown	N	Building was torn down			-	-	-	-
L - 32	Robert Herson	27 Spring Street Caledonia, NY 14423	538-6251	Y	Y	1"	5/8"	B	1"	B	DualCV	B
L - 33	Sandra Heany	17 Spring Street Caledonia, NY 14423	538-9586	Y	Y	1"	5/8"	B	1"	B	DualCV	B
L-34	Steve Carroll	2379 Route 5 LeRoy, NY 14482	538-4212	Y	Y	1"	5/8"	B	1"	B	DualCV	B
L - 37	Mary Munt	2537 West Main Street Caledonia, NY 14423	436-0055	Y	N	No water service hook up						
L - 38	Roy Tiede	2800 West Main Street Caledonia, NY 14423	538-4276 538-2381(w)	Y	Y	1"	5/8"	B	1"	B	DualCV	B
L - 39	Paulettee Brisson	199 Spring Street Caledonia, NY 14423	538-6502	Y	Y	1"	5/8"	B	1"	B	DualCV	B
L - 41	Linda Scott	2387 West Main Street Caledonia, NY 14423	538-6856	Y	Y	1.5"	5/8"	B	1"	B	DualCV	B

Table 1
Residential Services

Notes:
1. **Exterior Services - Contractor, Resident Engineer, and Homeowner shall layout all exterior water services in the field, except where detailed on plan sheets for commercial buildings. Details on exterior services are shown on sheet G-31.**
2. **Interior Services - Contractor, Resident Engineer, and Homeowner shall layout all interior water services in the field, except those detailed on sheet G-32. Details on interior services are also shown on sheet G-32.**
3. **Livingston County Only - All residential meters shall be located within each residence. If installation is not feasible, meter shall be installed within a meter pit.**

= changed or added from the original Contract Specifications

*B=Basement, 1F=Inside residence-1st Floor, Pit=Meter Pit, HE=Heated Enclosure, MH=Manhole
**RPZ=Reduced Pressure Zone, DCV=Double Check Valve, DualCV=Residential Dual Check Valve

Well #	Name	Address	Phone # (585)	Well Located	Abandon Well-?	Size of Water Service	Size of Water Meter	Location of Water Meter*	Size of Backflow Preventer	Location of Backflow Preventer*	Type of Backflow Preventer**	Location of Pressure Reducing Valve*
Monroe County												
M - 1	William Kilmer 2831 Genesee St. Pifford, NY 14533 (716)624-1220 (w)	1899 Flint Hill Road Caledonia, NY 14423	538-4293	Y	Y	1.5"	5/8"	Pit	-	-	-	1F
	Mary Broadbent	1897 Flint Hill Road Caledonia, NY 14423	?	Shares	-	1.5"	5/8"	Pit	-	-	-	Pit
M - 2	Edward Fennessey	1877 Flint Hill Road LeRoy, NY 14482	538-6469	Y	Y	1"	5/8"	B	-	-	-	B
M - 3	Ed Moulton	1853 Flint Hill Road Mumford, NY 14511	538-2481	Well Location Unknown	N	1"	5/8"	Pit	-	-	-	1F
M - 4	Earl Ipsaro	1845 Flint Hill Road LeRoy, NY 14482	538-6950	Y	Y	1"	5/8"	B	-	-	-	B
M - 5	James Zielinski	1810 Flint Hill Road LeRoy, NY 14482	538-6884	Y	Y	1"	5/8"	B	-	-	-	B
M - 6	Keith Hendershott	1809 Flint Hill Road Mumford, NY 14511	538-2265	Y	Y	1"	5/8"	B	-	-	-	B
M - 7	Bruce Seekins	1703 Flint Hill Road LeRoy, NY 14482	538-4143	Y	Y	1.5"	5/8"	B	-	-	-	B
M-8	Pioneer Beagle Club	Flint Hill Road LeRoy, NY 14482		Y	Y	1"	5/8"	1F	-	-	-	1F
M - 9	Larry Hendershott	1623 Flint Hill Road LeRoy, NY 14482	538-6429 467-2000(w)	Y	Y	1"	5/8"	B	-	-	-	B
M - 10	Herbert Brandes	45 Lime Rock Road LeRoy, NY 14482	538-4933	Y	Y	1"	5/8"	B	-	-	-	B

Table 1
Residential Services

Notes: 1. **Exterior Services - Contractor, Resident Engineer, and Homeowner shall layout all exterior water services in the field, except where detailed on plan sheets for commercial buildings. Details on exterior services are shown on sheet G-31.**
2. **Interior Services - Contractor, Resident Engineer, and Homeowner shall layout all interior water services in the field, except those detailed on sheet G-32. Details on interior services are also shown on sheet G-32.**
3. **Livingston County Only - All residential meters shall be located within each residence. If installation is not feasible, meter shall be installed within a meter pit.**

= changed or added from the original Contract Specifications

*B=Basement, 1F=Inside residence-1st Floor, Pit=Meter Pit, HE=Heated Enclosure, MH=Manhole
**RPZ=Reduced Pressure Zone, DCV=Double Check Valve, DualCV=Residential Dual Check Valve

Well #	Name	Address	Phone # (585)	Well Located	Abandon Well-?	Size of Water Service	Size of Water Meter	Location of Water Meter*	Size of Backflow Preventer	Location of Backflow Preventer*	Type of Backflow Preventer**	Location of Pressure Reducing Valve*
M - 11	Stephen Scott	75 Lime Rock Road LeRoy, NY 14482	538-6729	Y	N	1"	5/8"	B	1"	B	RPZ	B
M - 12	Dorsey Scott	103 Lime Rock Road LeRoy, NY 14482	538-4582	Y	Y	1"	5/8"	1F	-	-	-	1F
M - 13	Mark and Debora Vellekoop	135 Lime Rock Road LeRoy, NY 14482	538-6294	Y	Y	1"	5/8"	B	-	-	-	B
M - 14	Thomas Roberts Jean Bennet	139 Lime Rock Road LeRoy, NY 14482	538-9625	Y	N	1.5"	5/8"	1F	1.5"	1F	RPZ	1F
M - 15	Falcon Trap and Game Club Attn: John Campbell 60 Queensway Rochester, NY 14623 (716)334-5670 or Floyd Wilson (716)263-2733	Lime Rock Road	?	Y	Y	1.5"	5/8"	Pit	1.5"	HE	RPZ	B
M - 16	Genesee Country Museum Attn: Mark Minunni Genesee Brewing Company 445 St. Paul Street Rochester, NY 14608 (716) 263-9265	P.O. Box 310 1410 Flint Hill Road Mumford, NY 14511-0310	538-6822	Y	Y	2"	1"	Pit	2"	HE	RPZ	HE
M - 17	Genesee Country Museum Attn: Mark Minunni Same as Above	P.O. Box 310 1410 Flint Hill Road Mumford, NY 14511-0310	538-6822	Y	Y			Combined with Well M-19				
M - 18	Genesee Country Museum Attn: Mark Minunni Same as Above	P.O. Box 310 1410 Flint Hill Road Mumford, NY 14511-0310	538-6822	Y	Y			Combined with Well M-19				
M - 19	Genesee Country Museum Attn: Mark Minunni Same as Above	P.O. Box 310 1410 Flint Hill Road Mumford, NY 14511-0310	538-6822	Y	Y	4",2"& 1"	1.5"	MH	4"	HE	RPZ	MH

Table 1
Residential Services

Notes:
1. **Exterior Services - Contractor, Resident Engineer, and Homeowner shall layout all exterior water services in the field, except where detailed on plan sheets for commercial buildings. Details on exterior services are shown on sheet G-31.**
2. **Interior Services - Contractor, Resident Engineer, and Homeowner shall layout all interior water services in the field, except those detailed on sheet G-32. Details on interior services are also shown on sheet G-32.**
3. **Livingston County Only - All residential meters shall be located within each residence. If installation is not feasible, meter shall be installed within a meter pit.**

= changed or added from the original Contract Specifications

*B=Basement, 1F=Inside residence-1st Floor, Pit=Meter Pit, HE=Heated Enclosure, MH=Manhole
**RPZ=Reduced Pressure Zone, DCV=Double Check Valve, DualCV=Residential Dual Check Valve

Well #	Name	Address	Phone # (585)	Well Located	Abandon Well-?	Size of Water Service	Size of Water Meter	Location of Water Meter*	Size of Backflow Preventer	Location of Backflow Preventer*	Type of Backflow Preventer**	Location of Pressure Reducing Valve*
M - 20	Genesee Country Museum Attn: Mark Minunni Same as Above	P.O. Box 310 1410 Flint Hill Road Mumford, NY 14511-0310	538-6822	Y	N	2"	1"	Pit	2"	HE	RPZ	HE
M - 21	Charles Dolan	1139 Flint Hill Road P.O. Box 175 Mumford, NY 14511	538-2275 232-3760(w)	Y	N	1"	5/8"	Pit	1"	HE	RPZ	B
M - 23	Fred Robbins	125 Spring Street Mumford, NY 14511	538-6585	Y	Y	1"	5/8"	1F	-	-	-	1F
M-24	Bungaleers Fishing Club Attn: Bill Morse (585)328-1400 (585) 721-7020 cell	100 Spring Street Mumford, NY 14511	?	Y	Y	1"	5/8"	Pit	-	-	-	B
M-26	Larry Snyder	105 Spring Street Mumford, NY 14511	538-2649	Well Location Unknown	N	1"	5/8"	B	-	-	-	B
M - 27	John Keenan	1 Spring Street P.O. Box 394 Mumford, NY 14511	538-4577	Y	Y	1"	5/8"	Pit	-	-	-	B
M - 35	Kevin Callanan	89 Spring Street Mumford, NY 14511	538-2577	Well Location Unknown	N	1"	5/8"	B	-	-	-	B

Stearns & Wheler Companies

Lehigh Valley MR Derailment Site	10 [illegible]	[illegible]
Client	Date	Job No.
North Woods Sportsmans Club - Gulf Road	Mike Polek	
Subject	Comp. By	Checked By

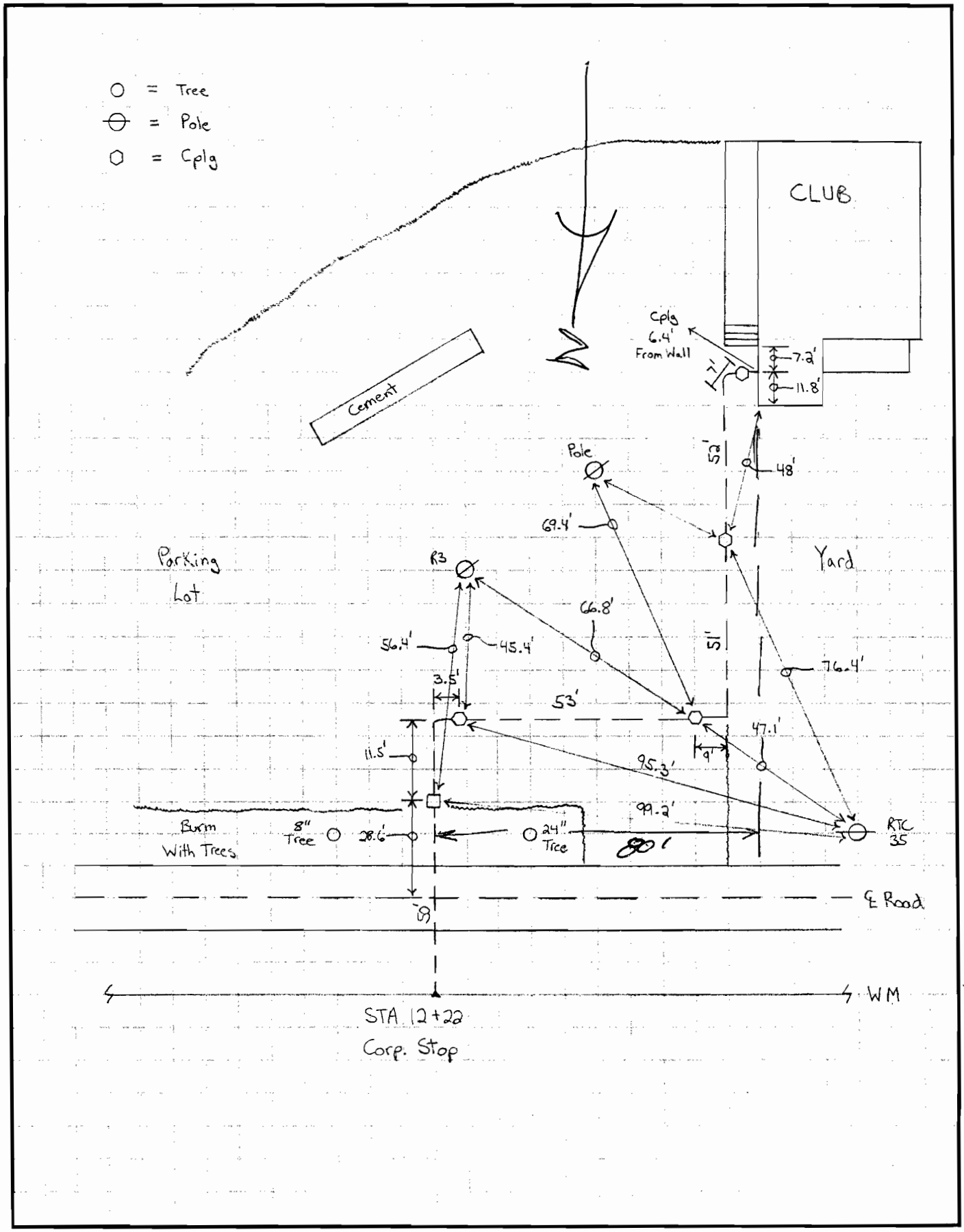

11.5
3.5
53.0
9.0
51.0
52.0
7.0
6.4

Sheet____ of____

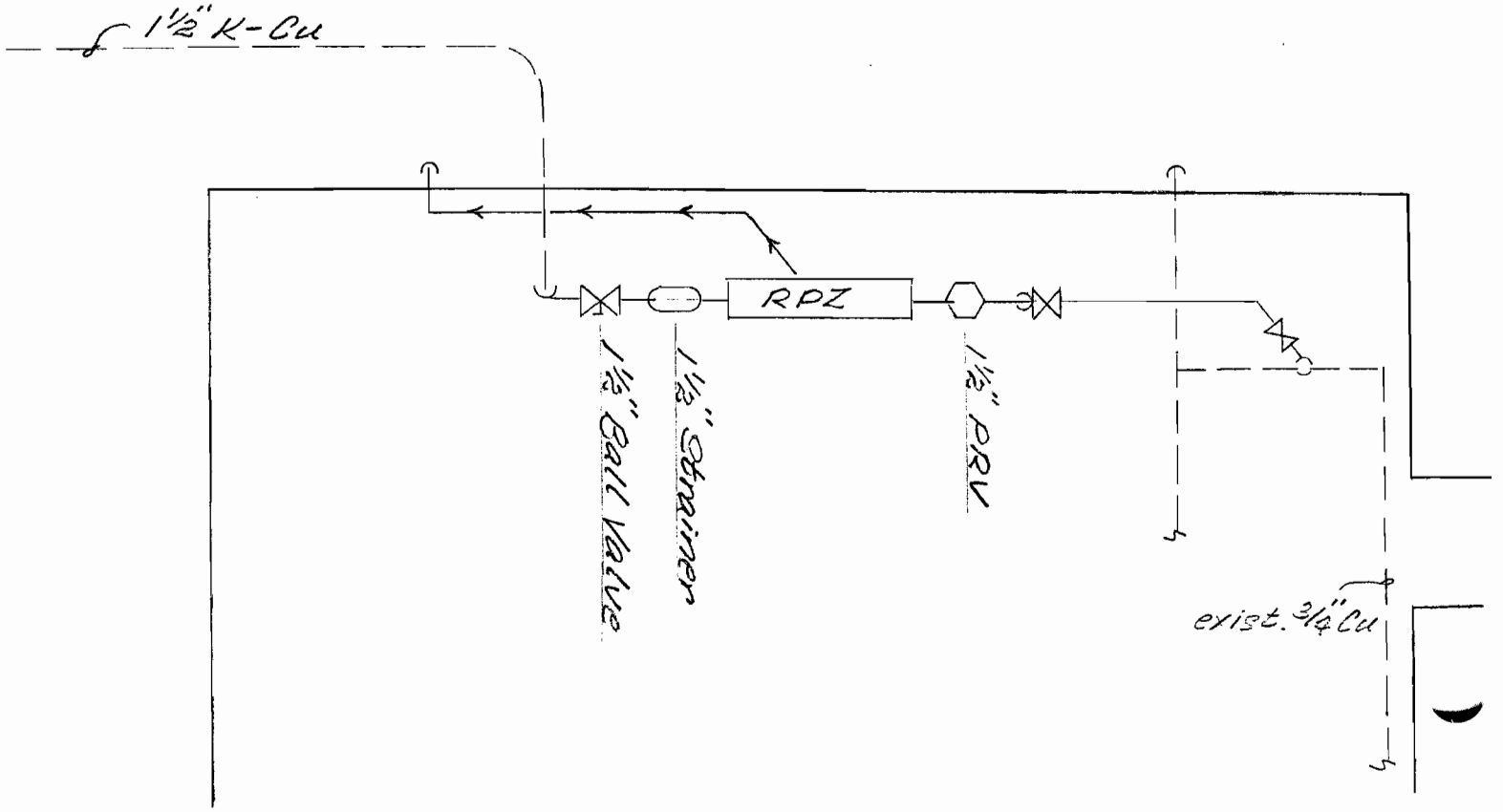
1½" K-Cu
RPZ
1½" Ball Valve
1½" Strainer
1½" PRV
exist. ¾" Cu

Stearns & Wheler
Companies

Lehigh Valley RR Department Site
nt

House # 8339 - Gulf Road
Subject

Date

Job No.

Mike Polek
Comp. By

Checked By

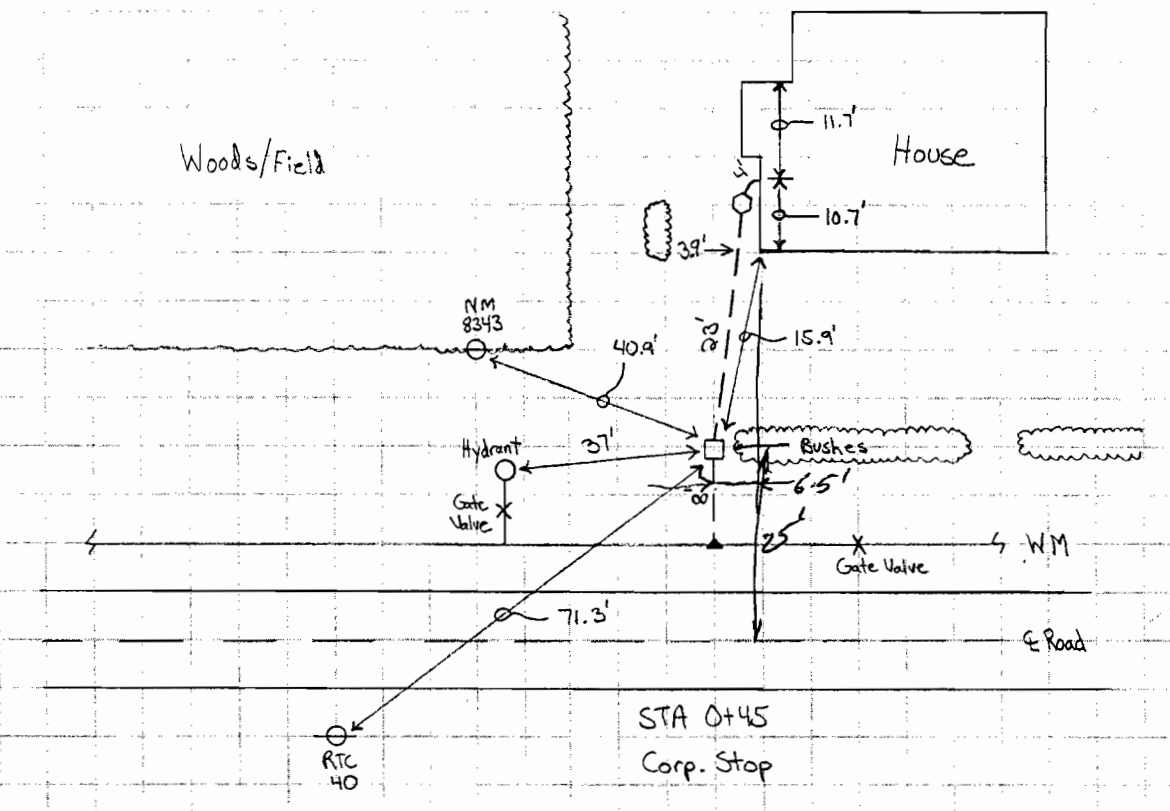

Sheet____ of____

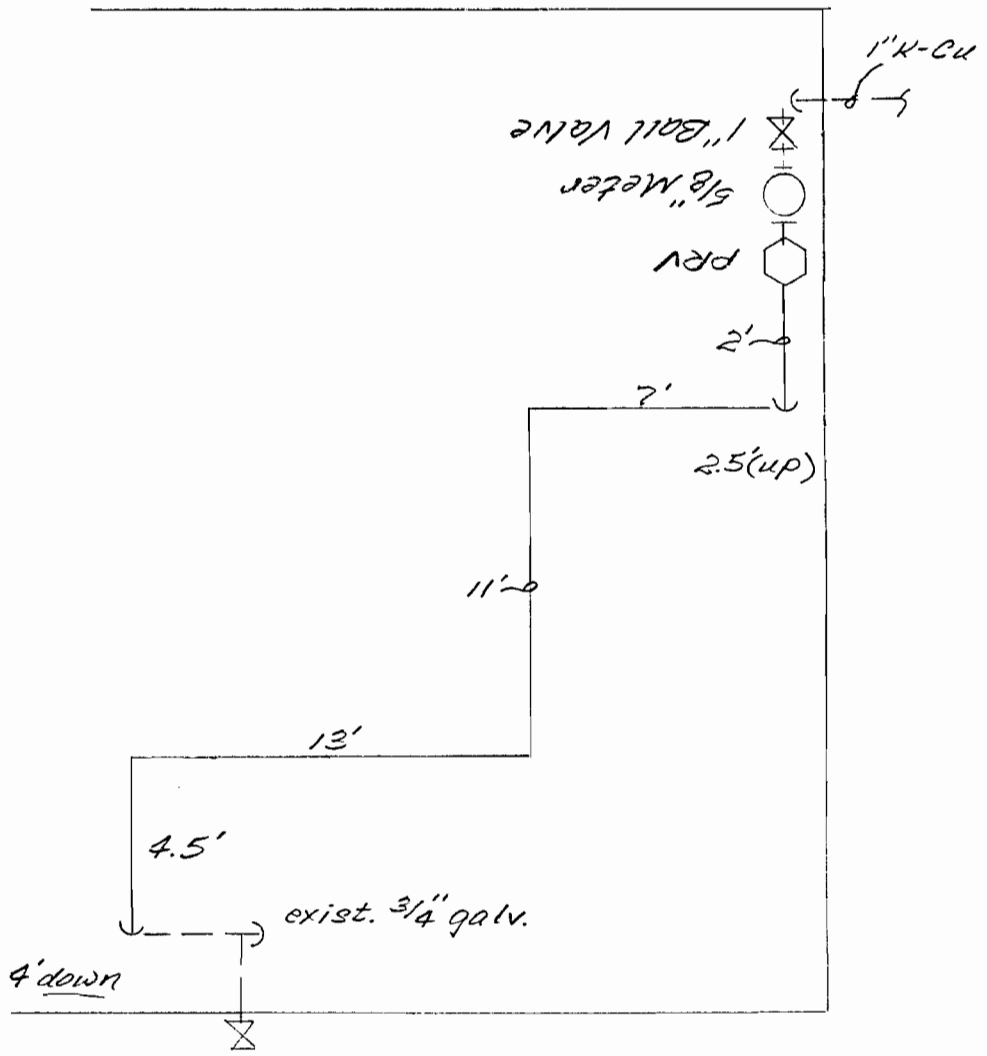
1" K-Cu
1" Ball Valve
5/8" Meter
PRV
2'
7'
2.5(up)
11'
13'
4.5'
exist. 3/4" galv.
4' down

Stearns & Wheler Companies

Lehigh Valley RR. Derailment Site	10-10-08	[illegible]
nt	Date	Job No.
Mumford Sportsmans Club - Flint Hill Road	Mike Polek	
Subject	Comp. By	Checked By

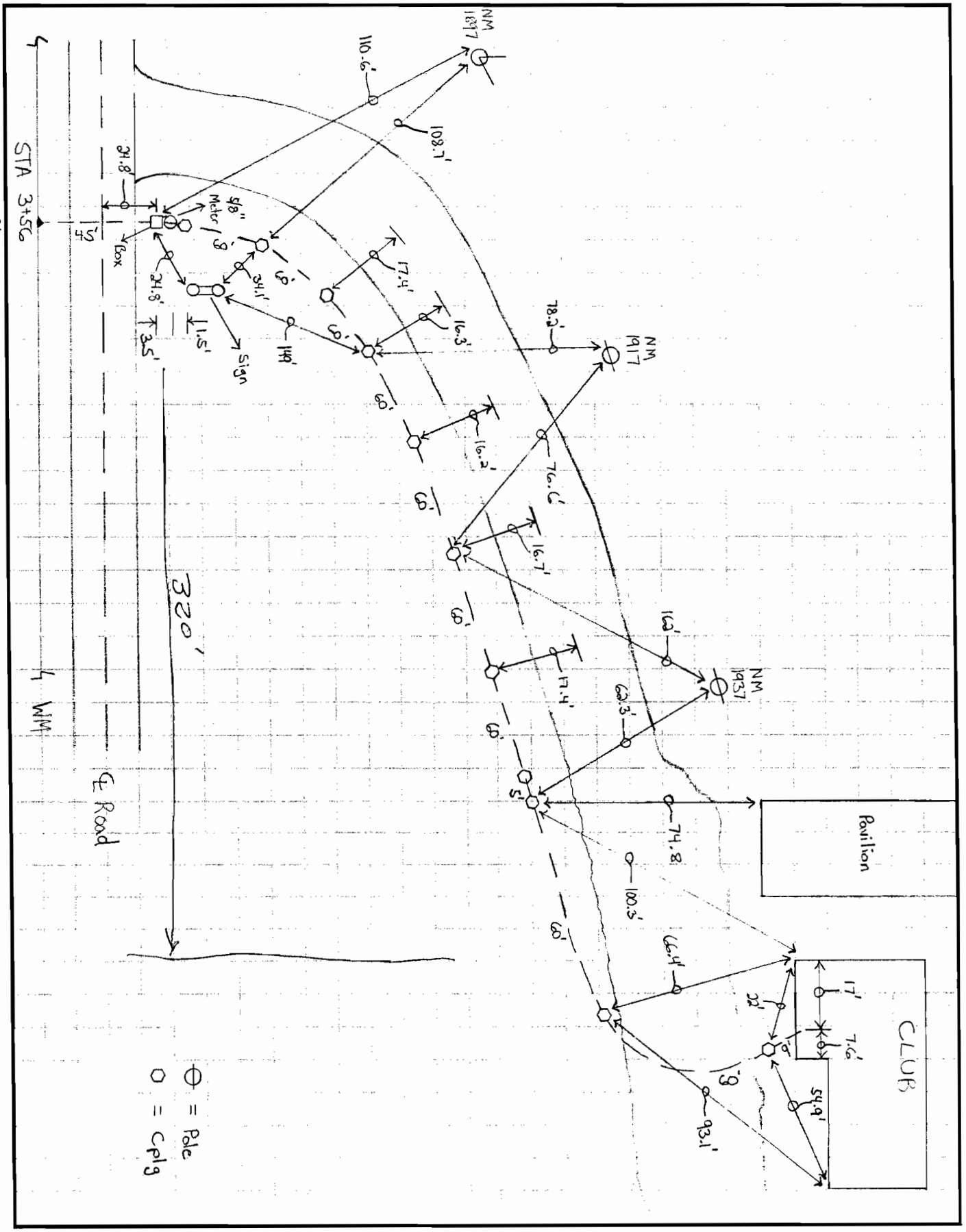

605
-45
560

Sheet____ of____

materials

1 ½" Union
1 ½" Brass 90° el
1" x 1 ½" Brass Bushing
1" x ¾" male adapter x comp.

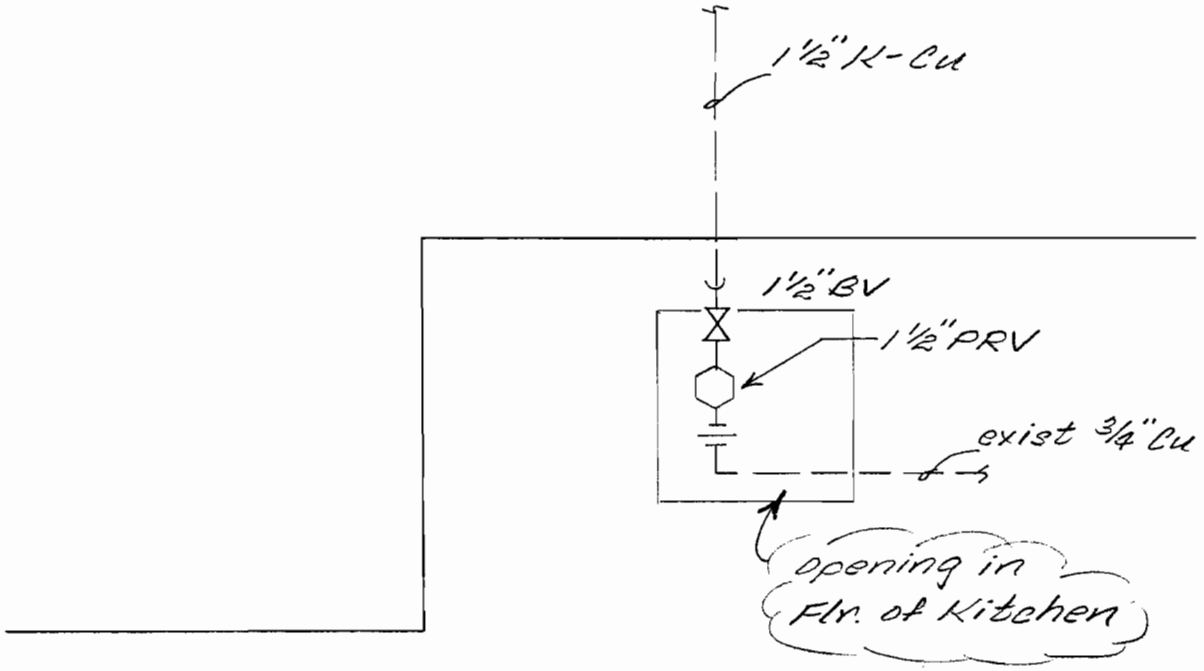

Stearns & Wheler, LLC
ENVIRONMENTAL ENGINEERS & SCIENTISTS

Subject: Lehigh Valley RR Derailment Site
Church Road – House # 8825

Date: 7-9-02
Job No.: D004327
Comp. By: Mike Polek
Checked By:

○ = Tree

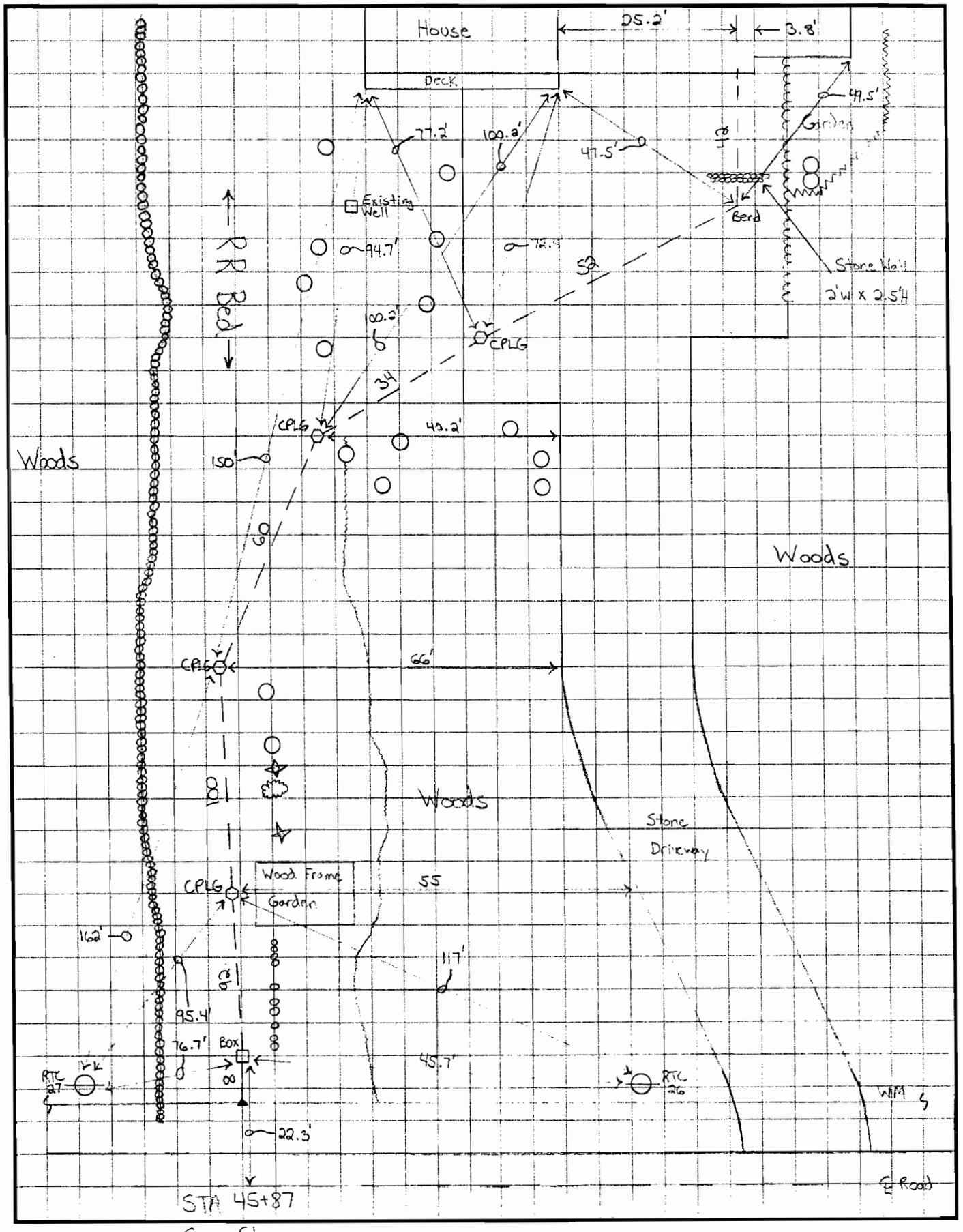

Corp. Stop

Sheet____ of____

RPZ_ FEBCO mdl. 860, 1" - S/N H05649, type RP

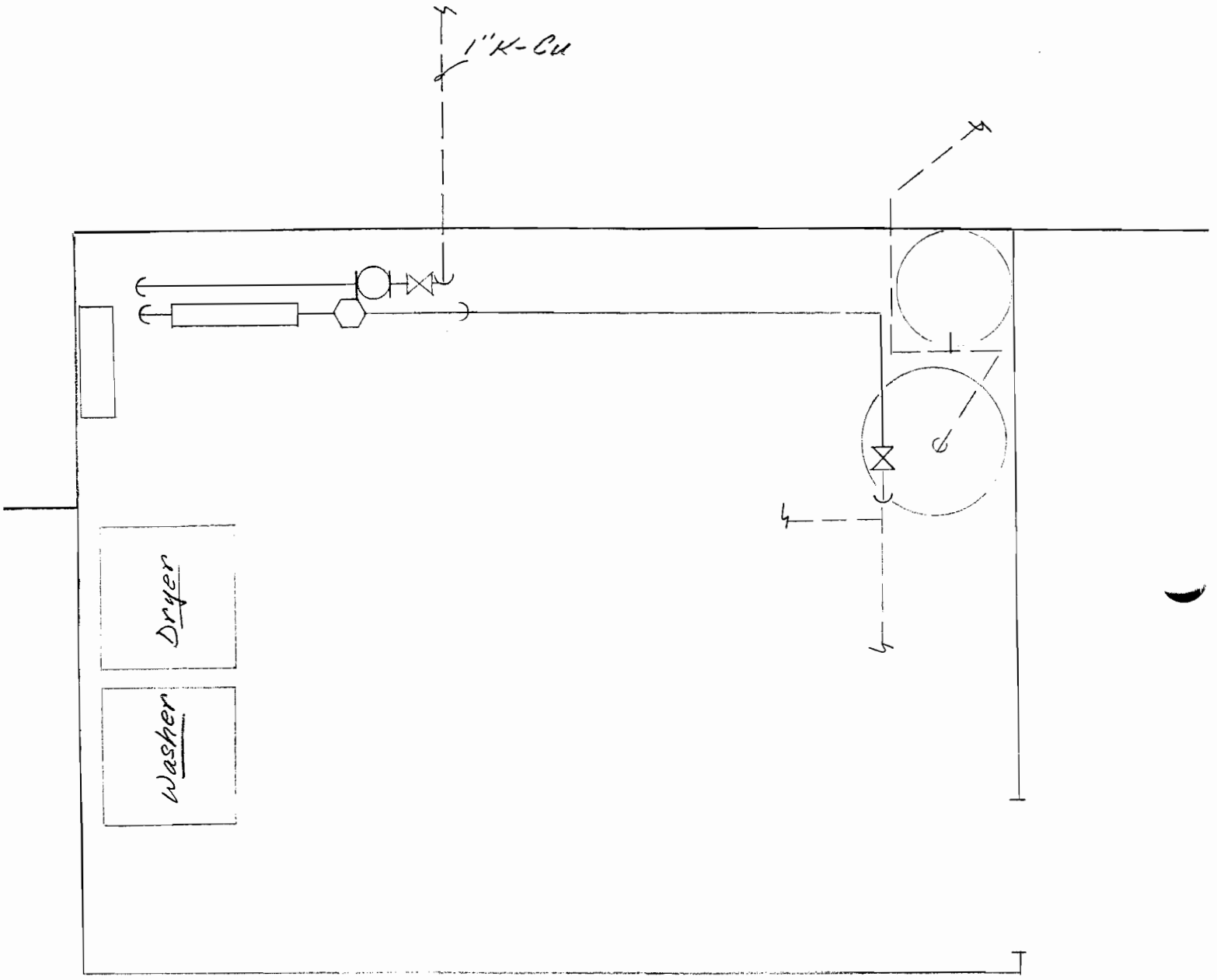

Stearns & Wheler Companies

Lehigh Valley KK Department Site		1-5-02	D004327
...ent		Date	Job No.
Church Road - House # 8859		Mike Polek	
Subject		Comp. By	Checked By

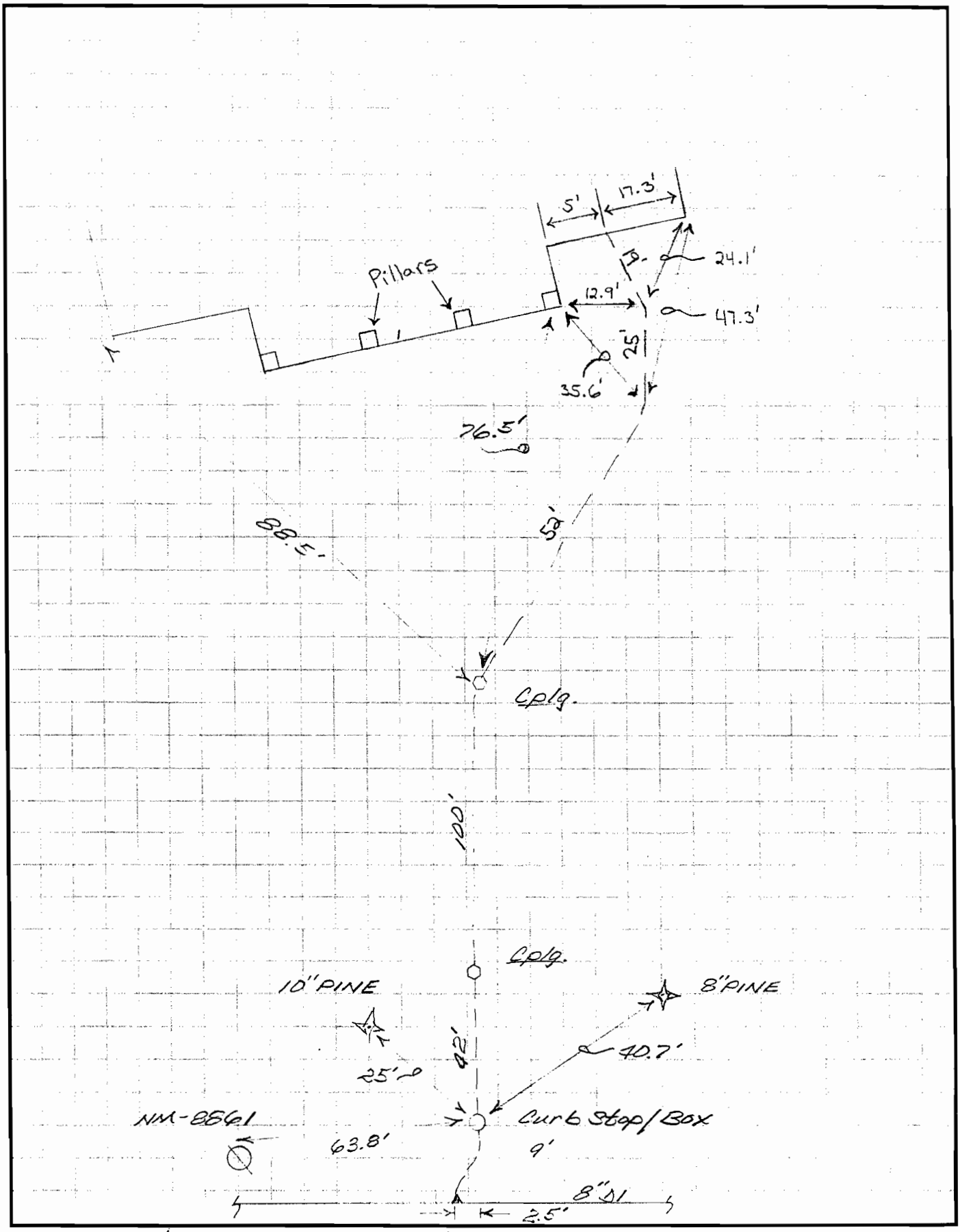

100
52
25
19
196
42
238

26.5' off ERD

STA. 37+61
Corp. Stop

Sheet ___ of ___

PRV_ Conbraco model 36c-105, 1"

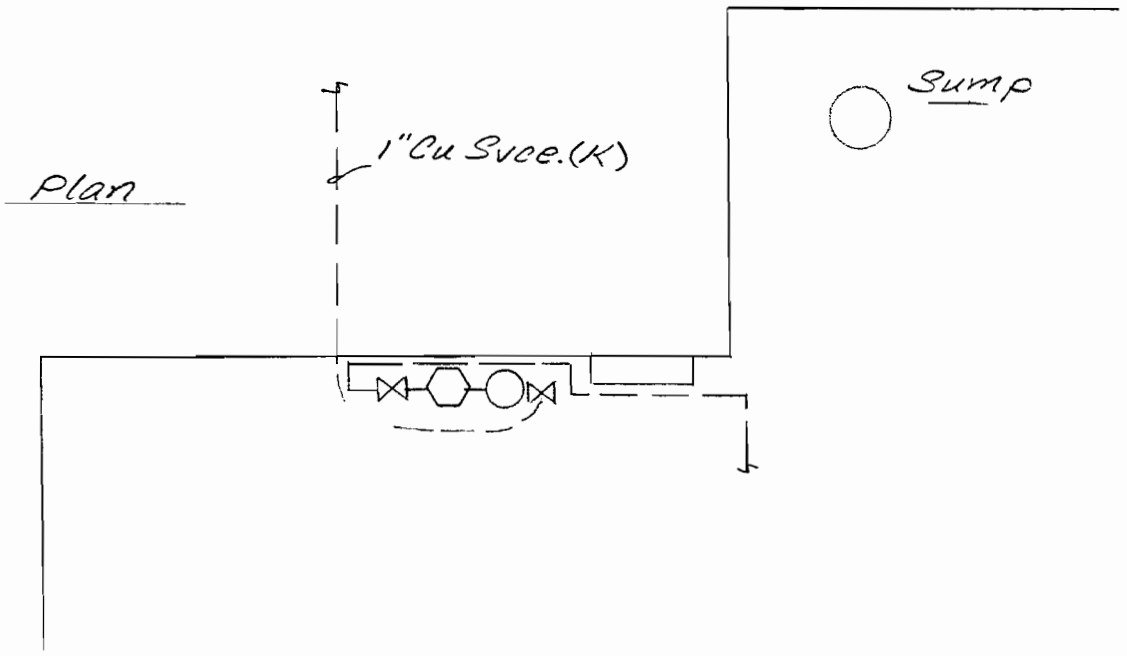

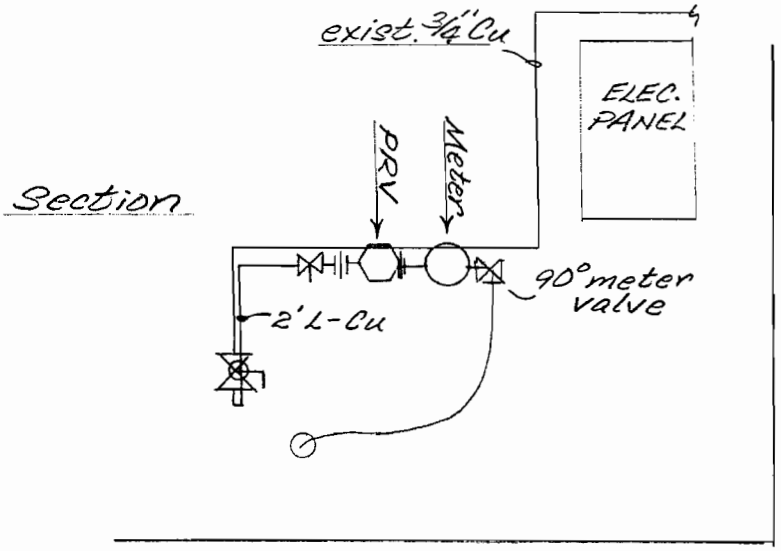

Stearns & Wheler
Companies

Lehigh Valley RR Derailment Site
ent

Church Road - House # 8871
Subject

4-4-02
Date

X004327
Job No.

Mike Polek
Comp. By

Checked By

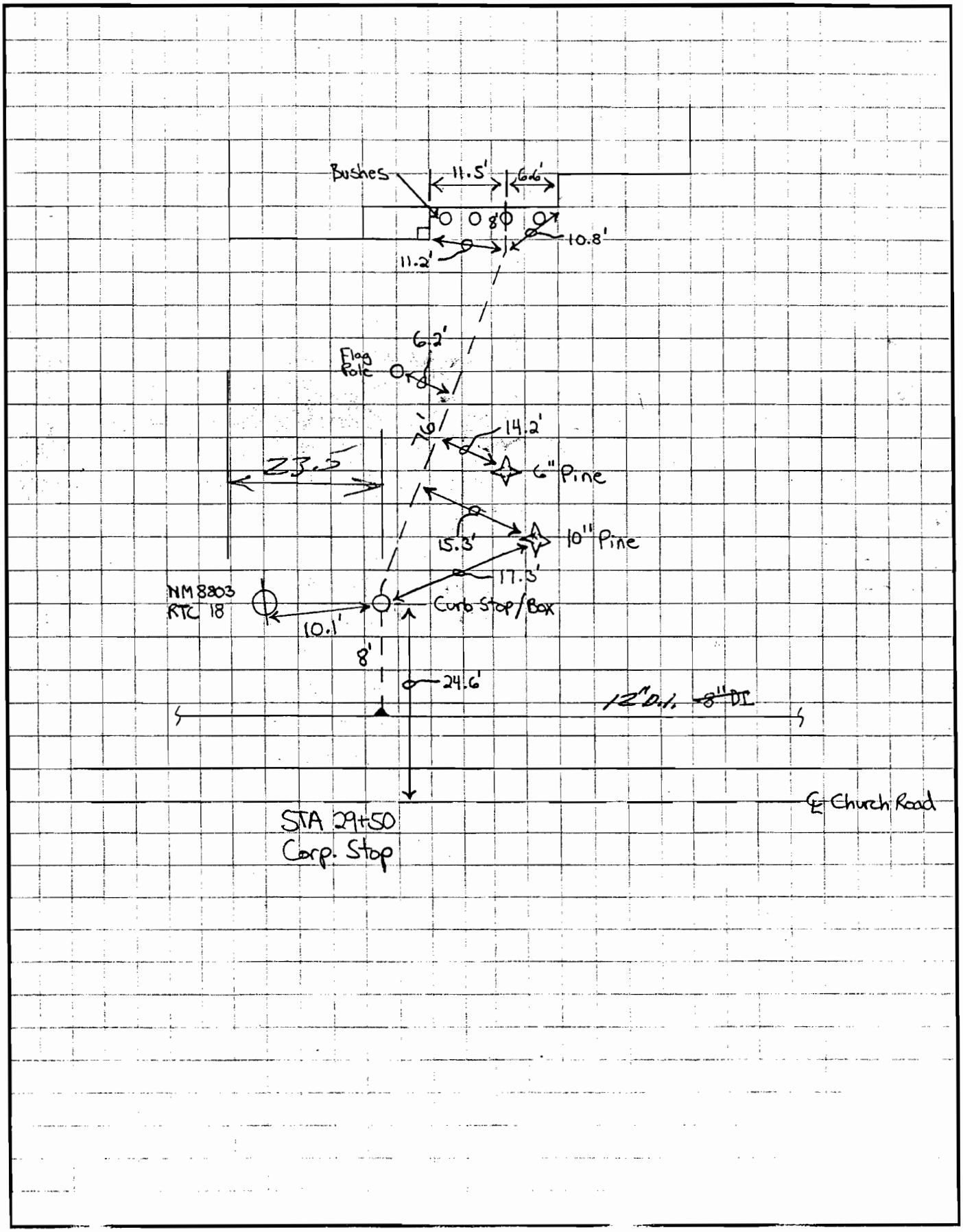

2

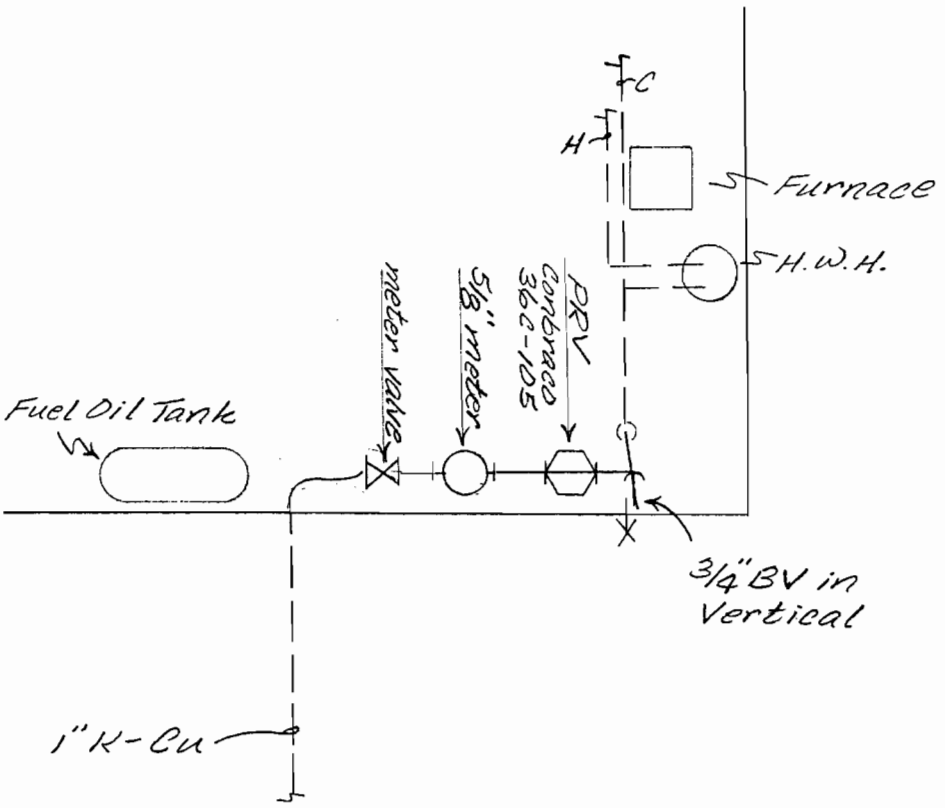
4"C
H
Furnace
H.W.H.
PRV
Conbraco
36C-105
5/8" meter
meter valve
Fuel Oil Tank
3/4" BV in
Vertical
1" K-Cu

Stearns & Wheler
Companies

Lehigh Valley RR Derailment Site
ent

7-5-02 | 10004021
Date | Job No.

Church Road - House # 8875
Subject

Mike Polek
Comp. By | Checked By

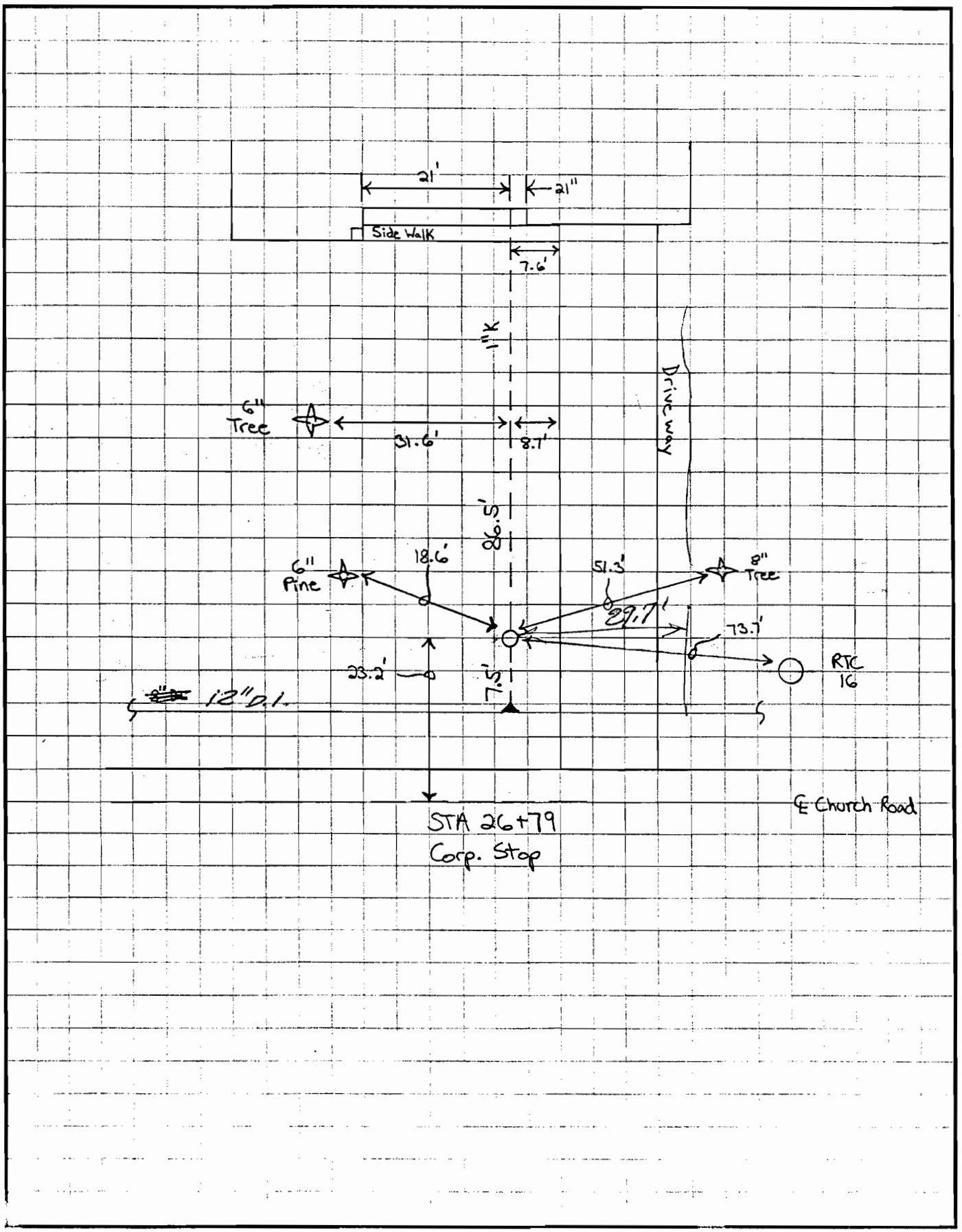

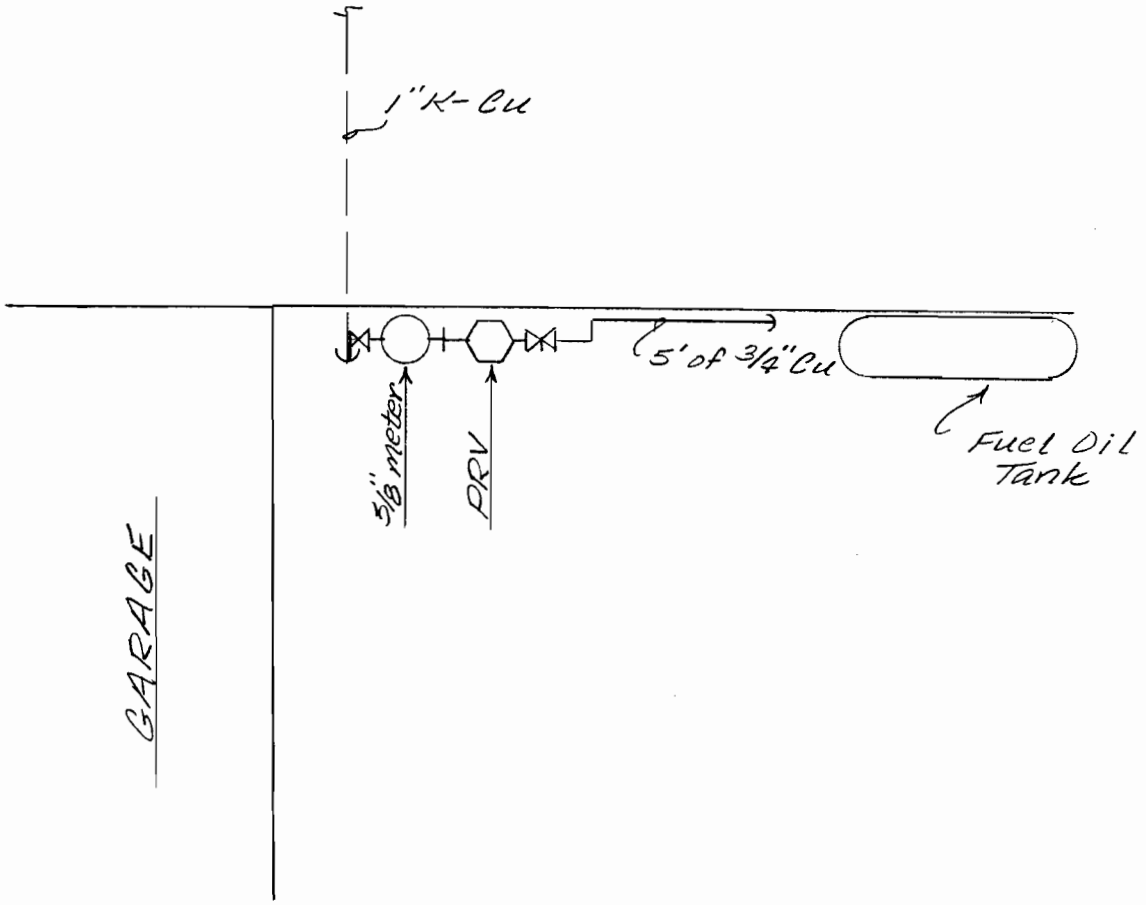
1" K-Cu
5' of 3/4" Cu
5/8" meter
PRV
Fuel Oil Tank
GARAGE

Stearns & Wheler, LLC
ENVIRONMENTAL ENGINEERS & SCIENTISTS

Subject

Date

Job No.

Comp. By

Checked By

HOUSE 8877

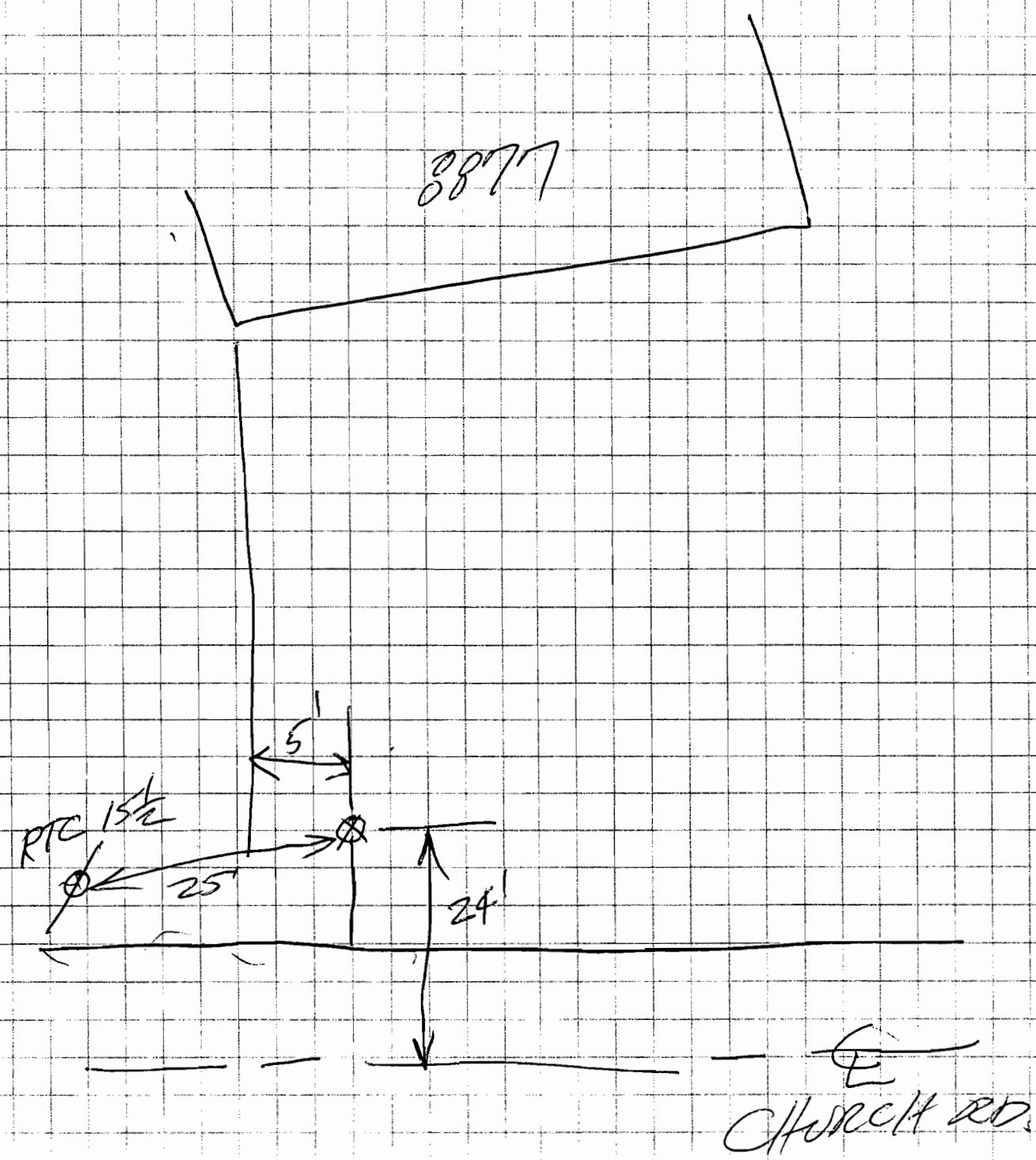

Sheet____ of____

Stearns & Wheler
Companies

Hse. #8879 Church Rd.
ent

D004327
Date Job No.

Subject

Comp. By Checked By

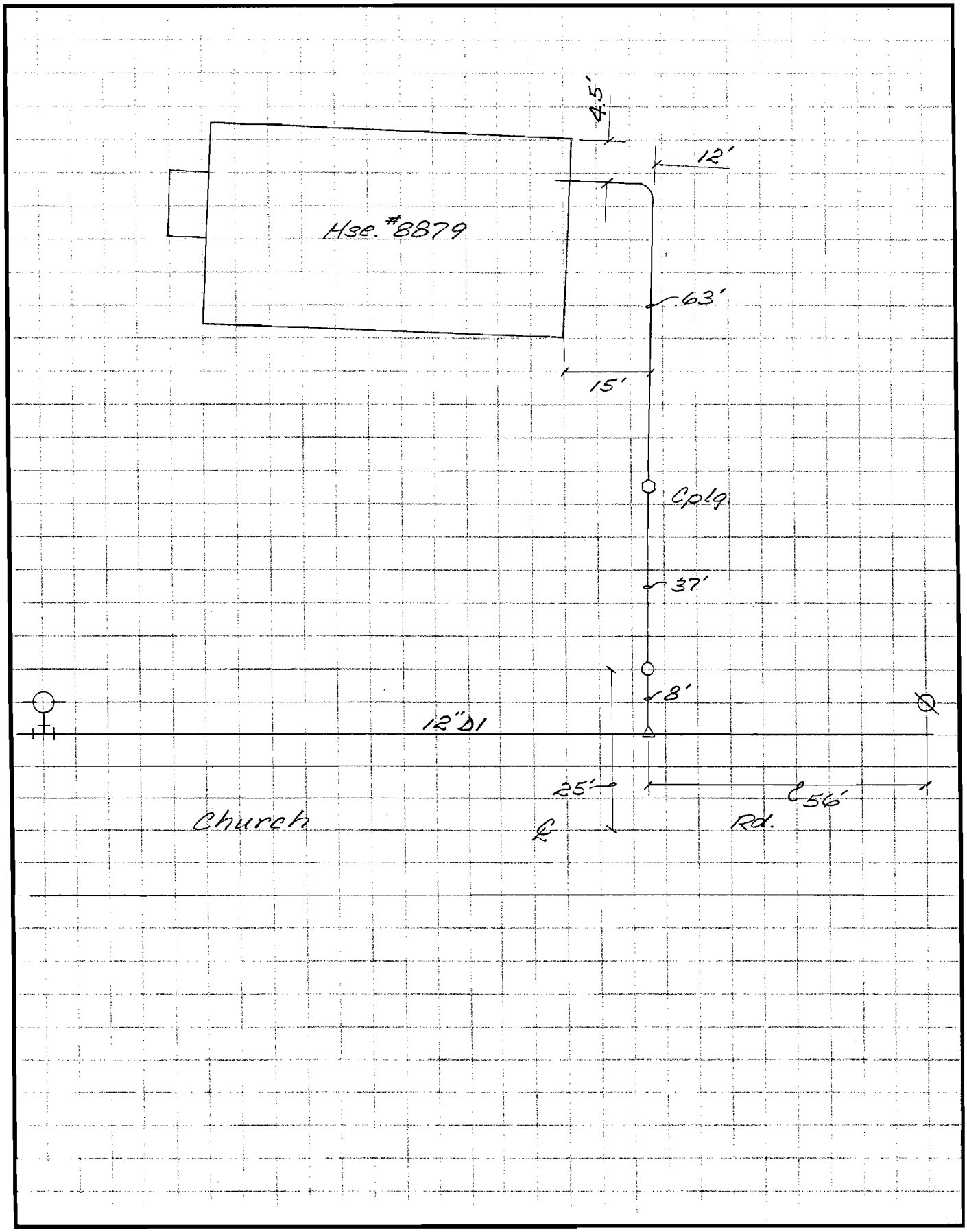

Sheet____ of____

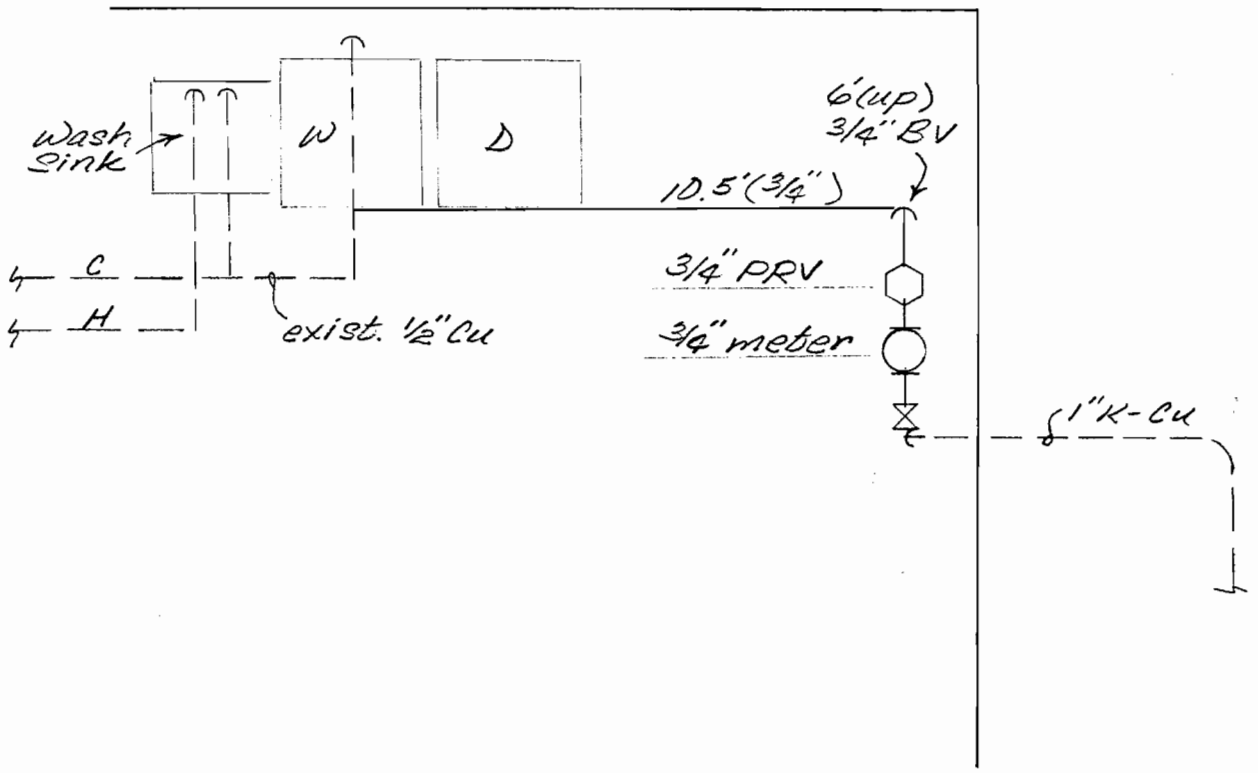
Wash sink
W
D
6'(up)
3/4" BV
10.5"(3/4")
C
H
exist. 1/2" Cu
3/4" PRV
3/4" meter
1" K-Cu

Stearns & Wheler
Companies

Hse. #8881 Church Rd.
nt

02/06/03 D004327
Date Job No.

Subject

Comp. By Checked By

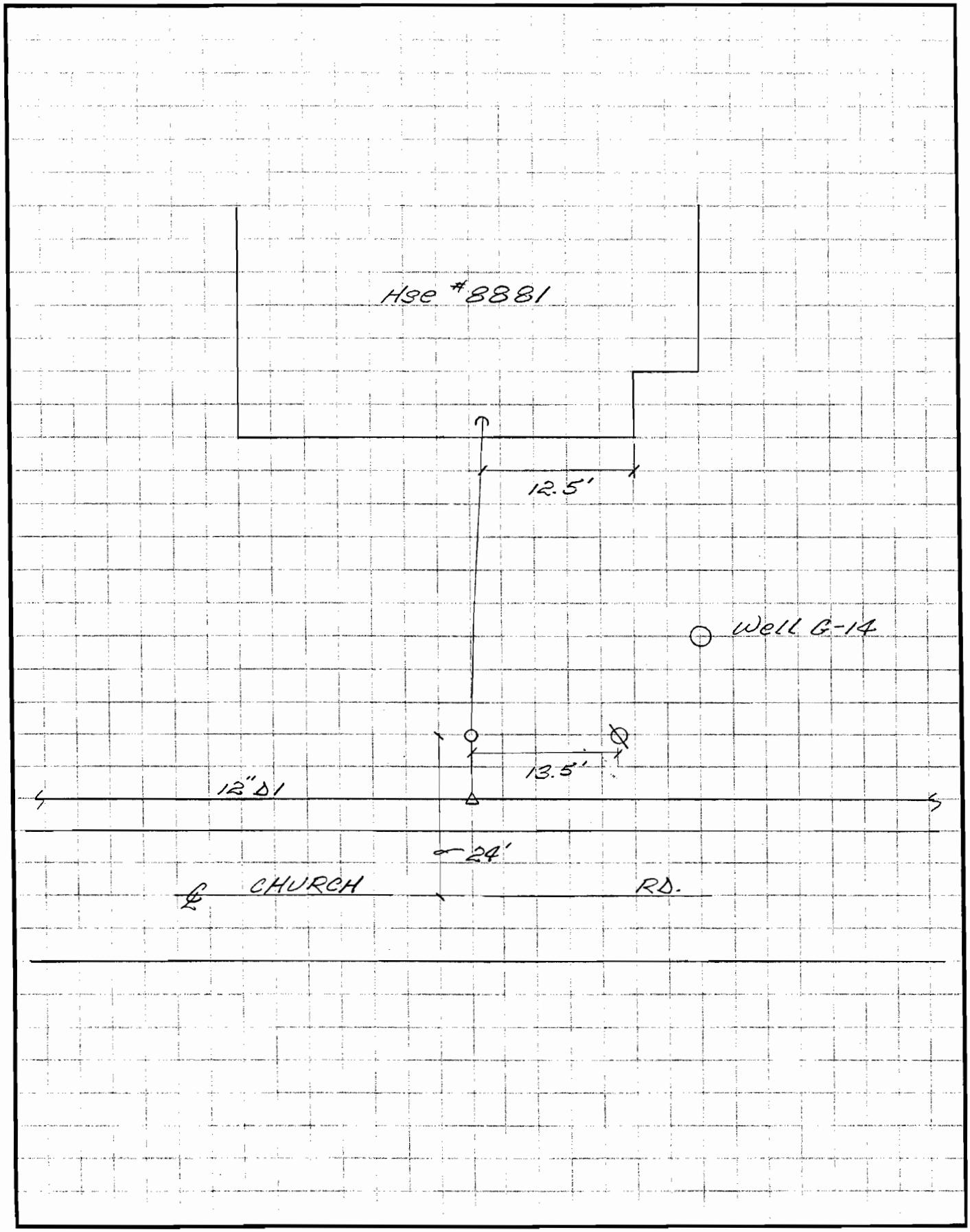

Sheet___ of___

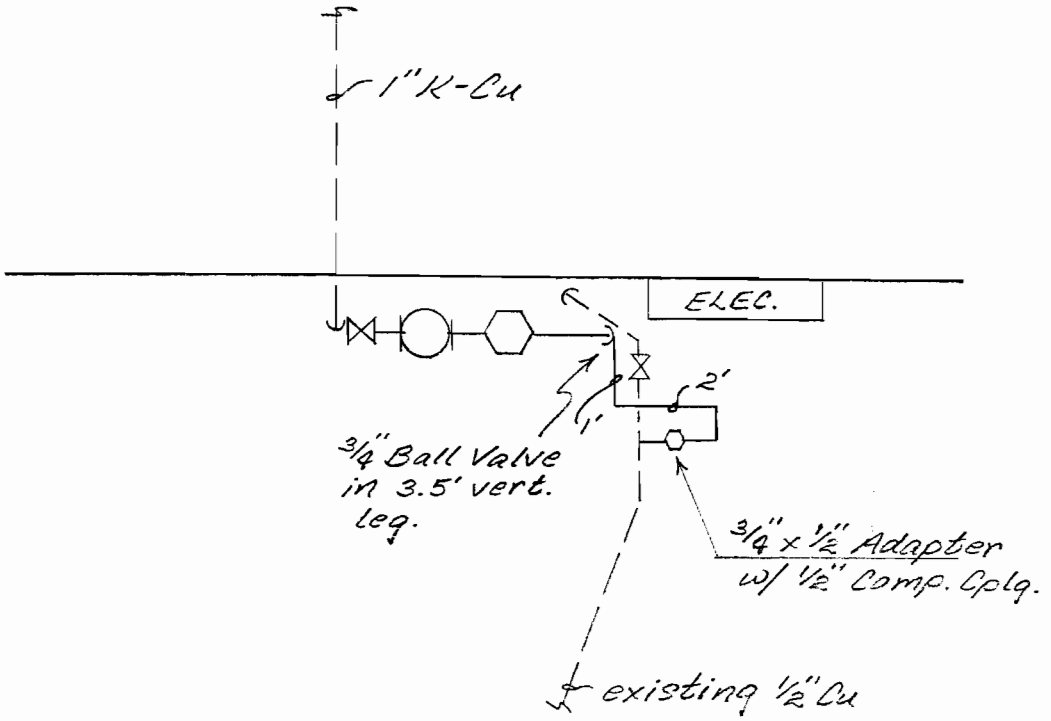
1" K-Cu
ELEC.
2'
1'
3/4" Ball Valve in 3.5' vert. leg.
3/4" x 1/2" Adapter w/ 1/2" Comp. Cplg.
existing 1/2" Cu

Stearns & Wheler, LLC
ENVIRONMENTAL ENGINEERS & SCIENTISTS

Lehigh Valley RR Derailment Site		-11-02	D004327
Subject		Date	Job No.
Genesee County Campground 40 Flint Hill Road		Mike Polek	
		Comp. By	Checked By

○ = Trees
☆ = Bushes

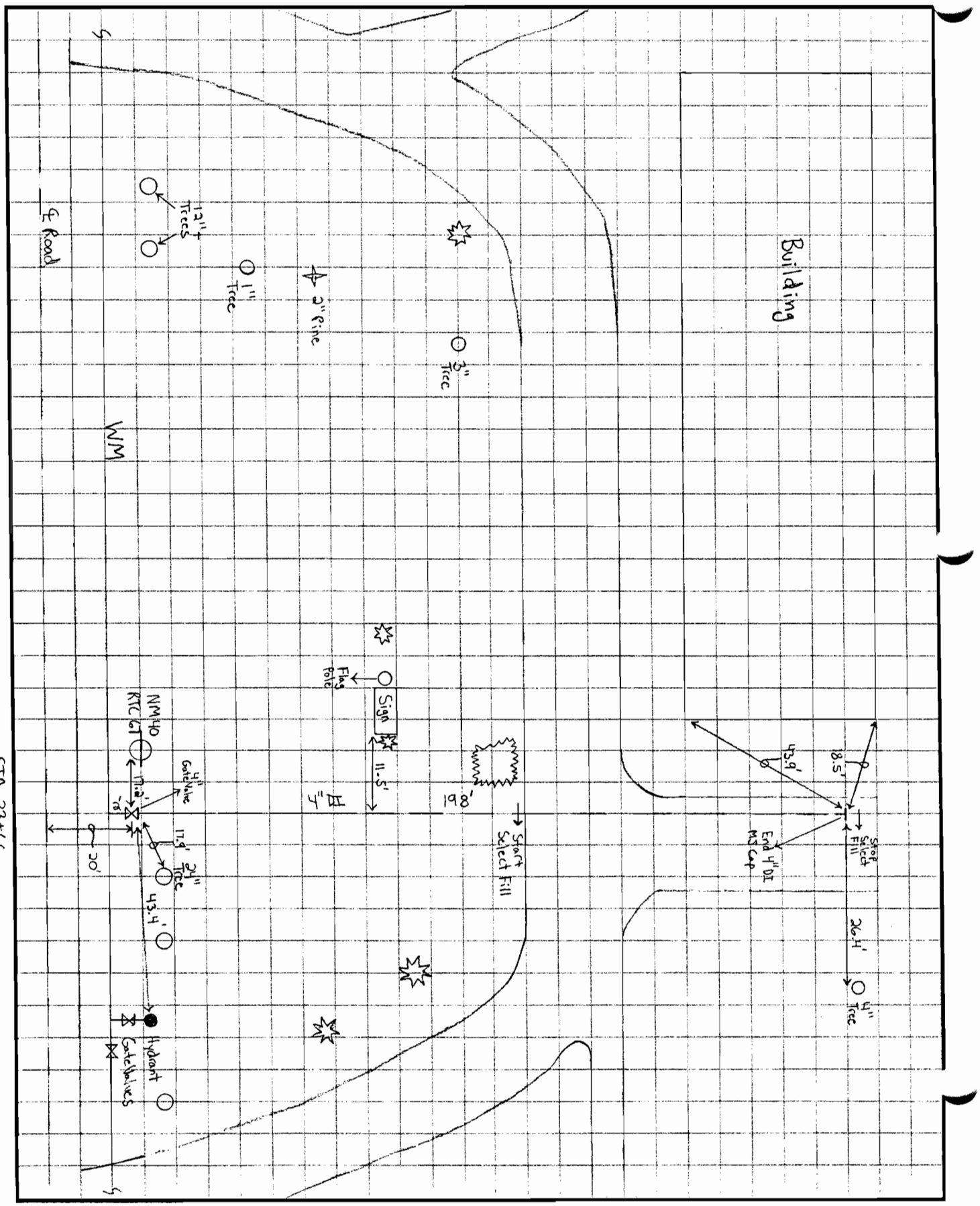

Sheet____ of____

RPZ- FEBCO model 860 2H Type RP, Serial No. 03137
PRV- Conbraco Serial No. 36 108, 2"

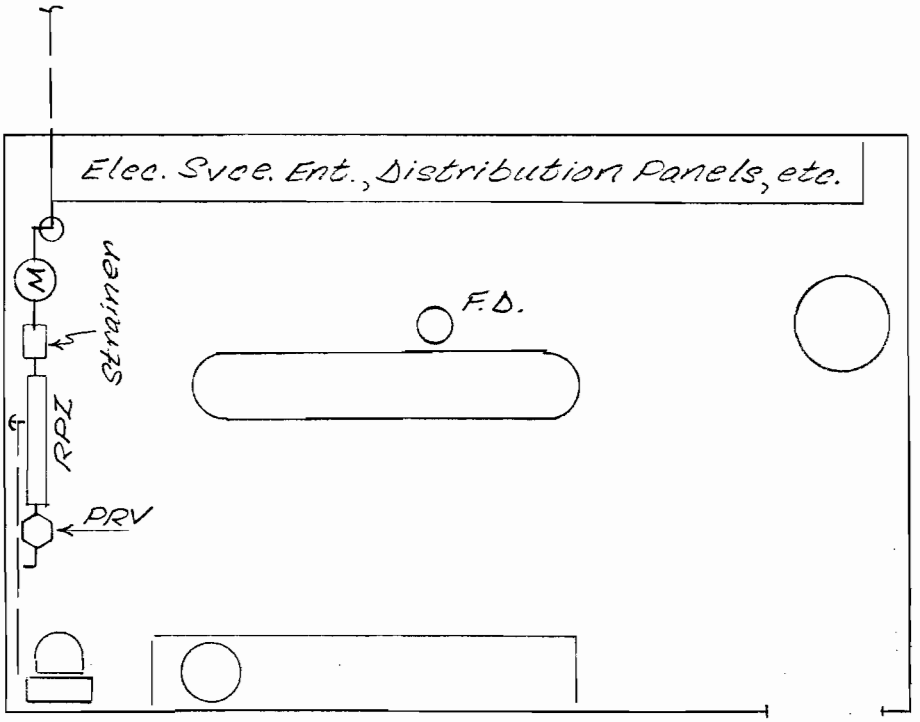

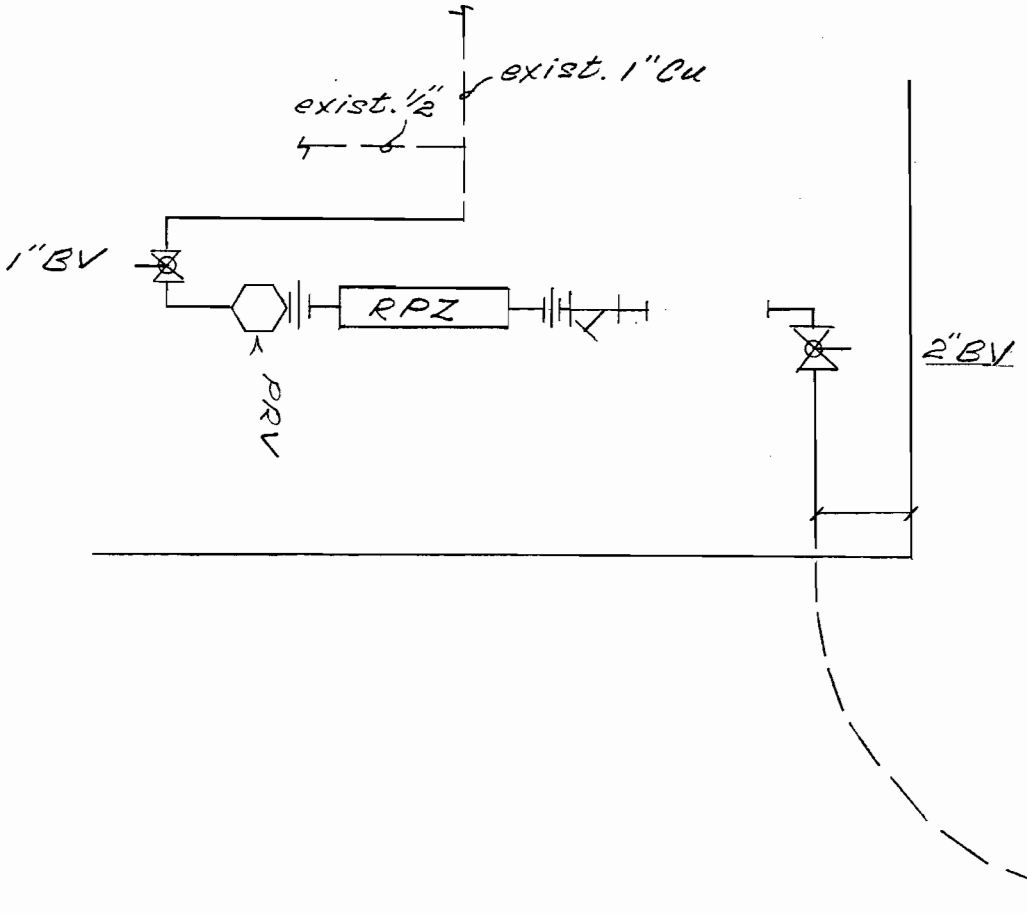

Stearns & Wheler, LLC
ENVIRONMENTAL ENGINEERS & SCIENTISTS

Subject: RT. 5 GUN SMOKE SALOON

Date | Job No.

Comp. By | Checked By

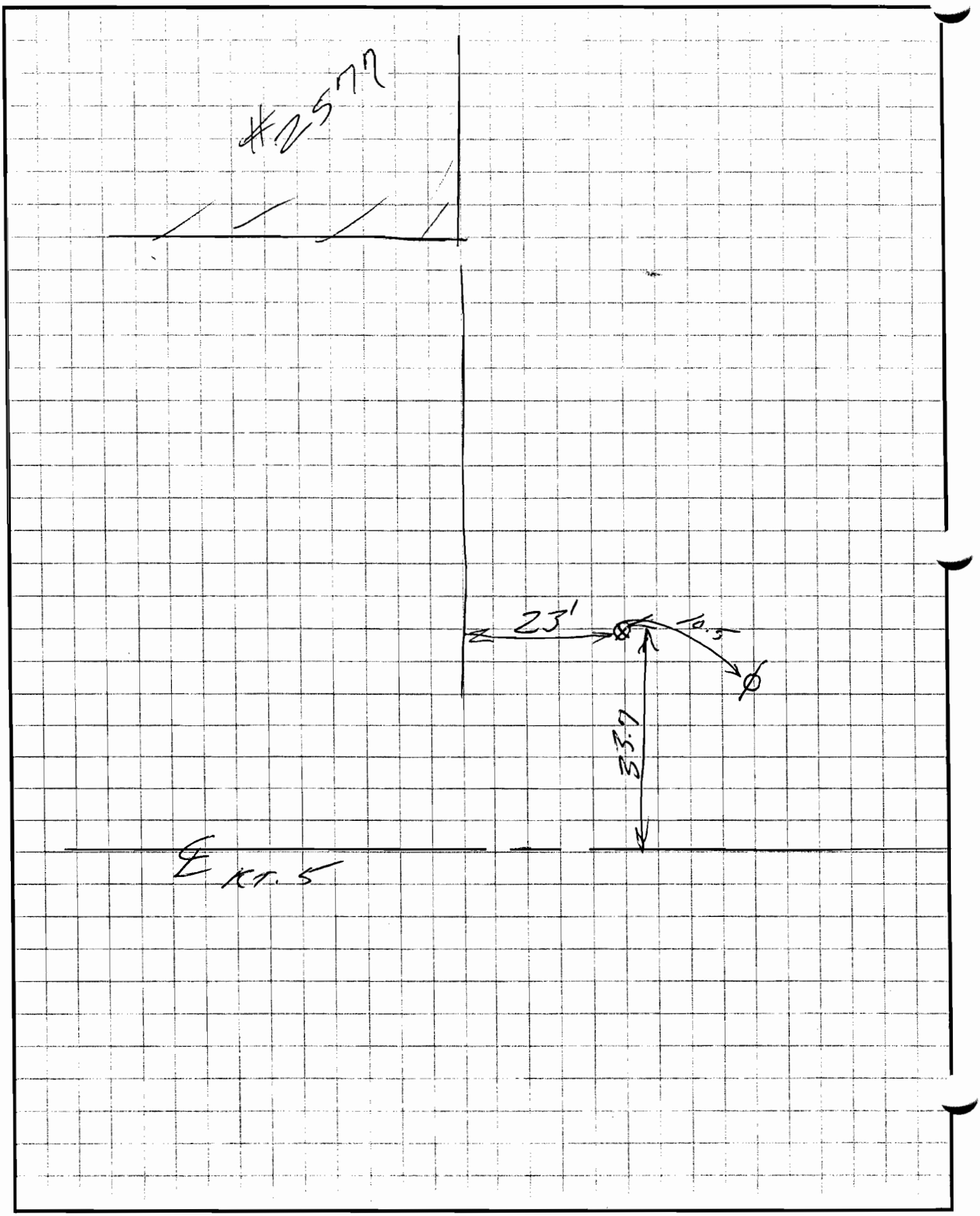

Stearns & Wheler, LLC
ENVIRONMENTAL ENGINEERS & SCIENTISTS

Subject: Rt. 5

Date

Job No.

Comp. By

Checked By

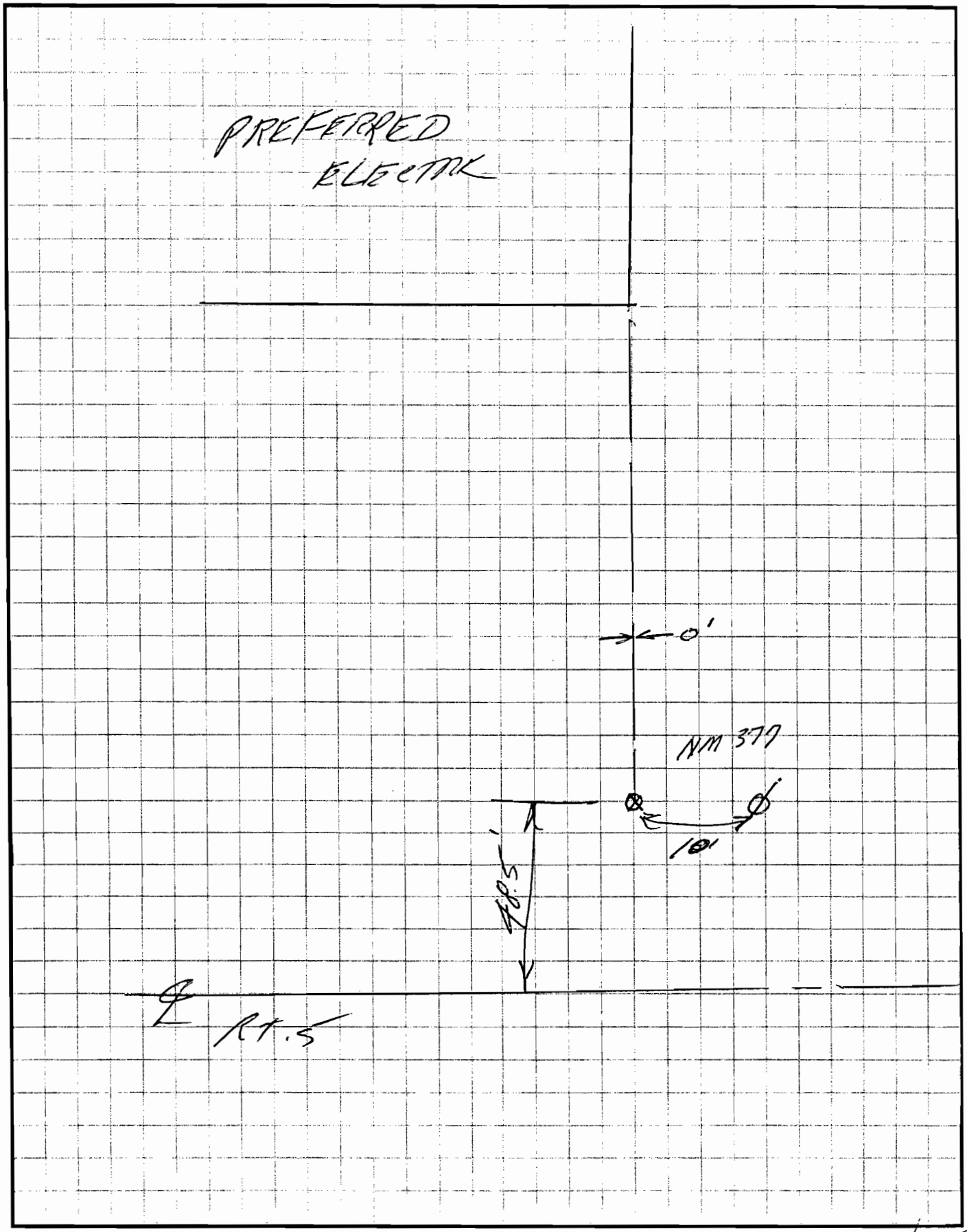

Sheet ____ of ____

Stearns & Wheler Companies

Seimax Gas - NYS RTE. 5 | D004327

nt | Date | Job No.

Subject | Comp. By | Checked By

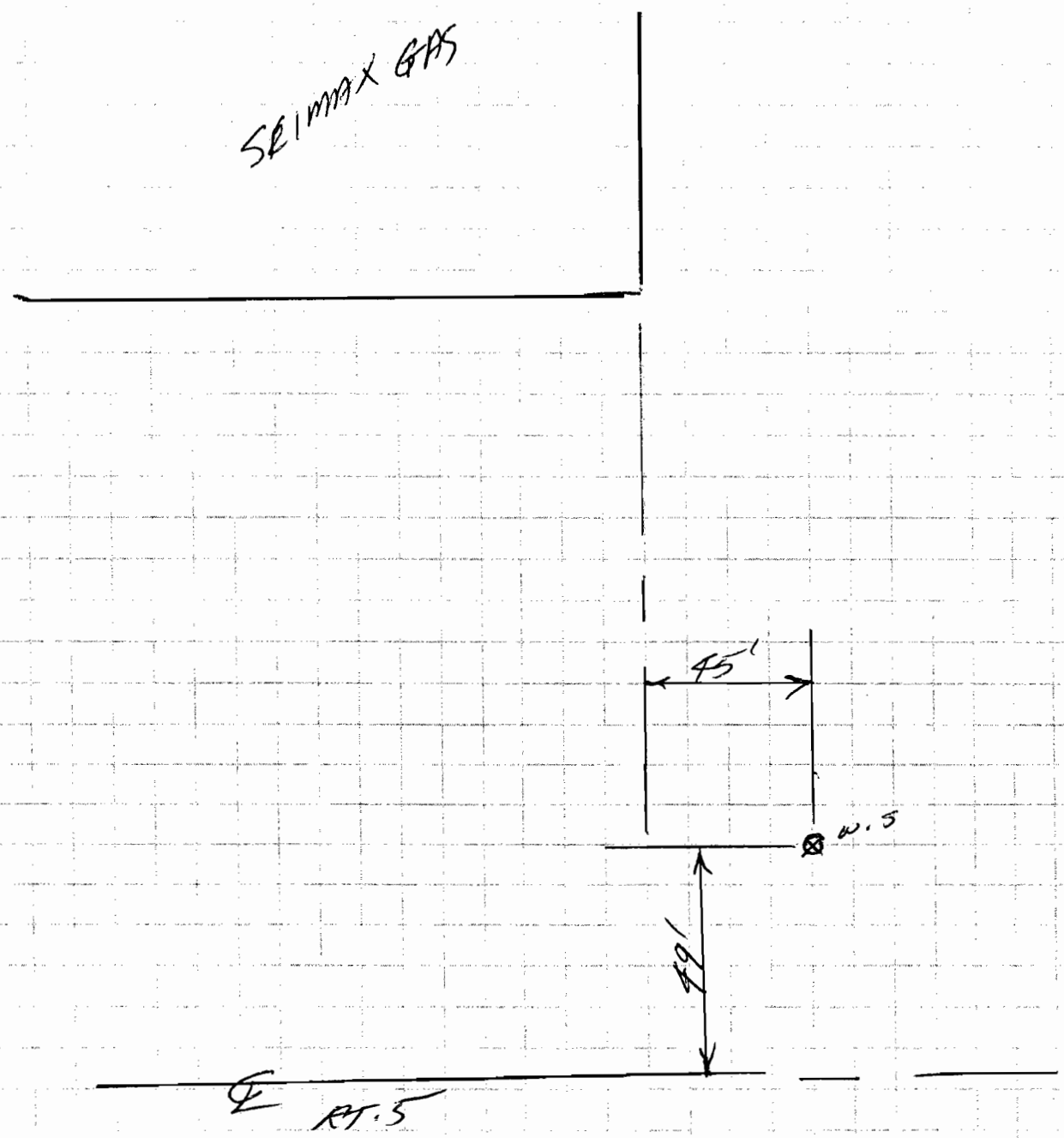

Sheet____ of____

RPZ - FEBCO mdl. 860, 1½" H Type RP
Serial No. 02317

Conbraco PRV - mdl. 36-107

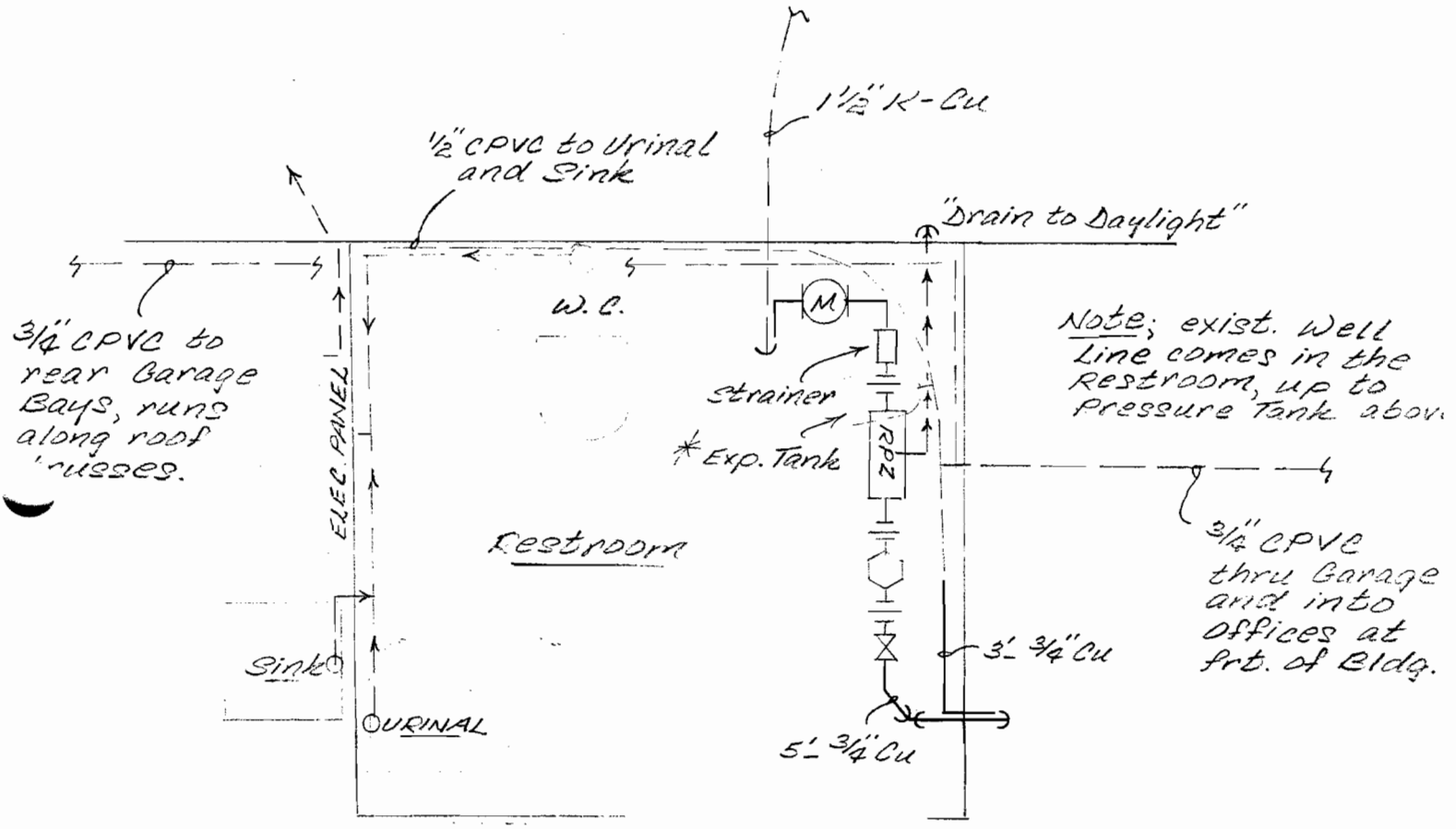

* Note; Thermal Expansion Tank installed in line and sits on ceiling above the Restroom.

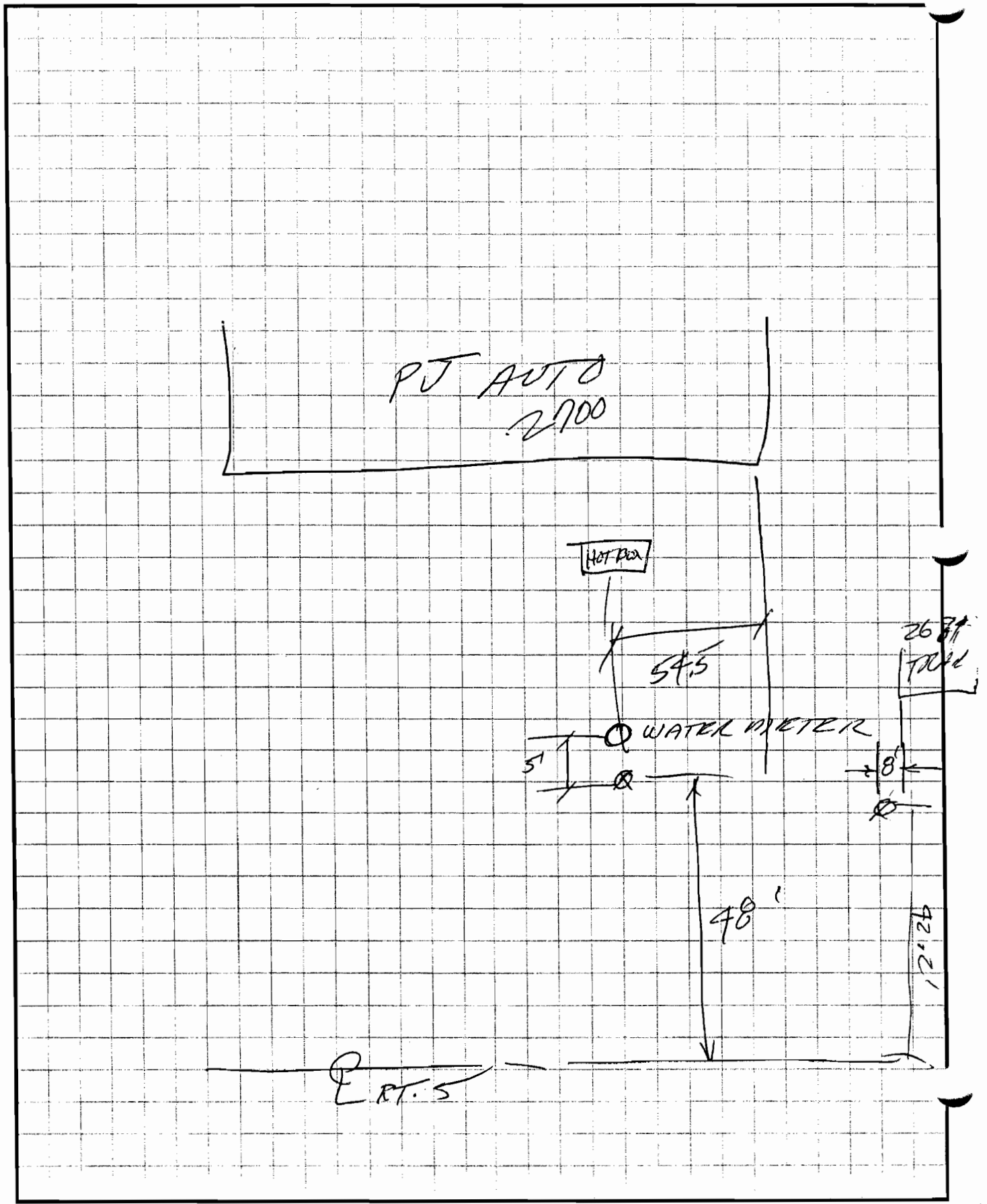
PJ AUTO
2700
HOT BOX
54.5
WATER METER
5'
8'
48'
12'24
℄ RT. 5

Stearns & Wheler
Companies

Lehigh Valley RR Treatment Site

Caledonia Garage - 2792 NYS Route 5
Subject

10-16-02 | D004327
Date | Job No.

Mike Pdck
Comp. By | Checked By

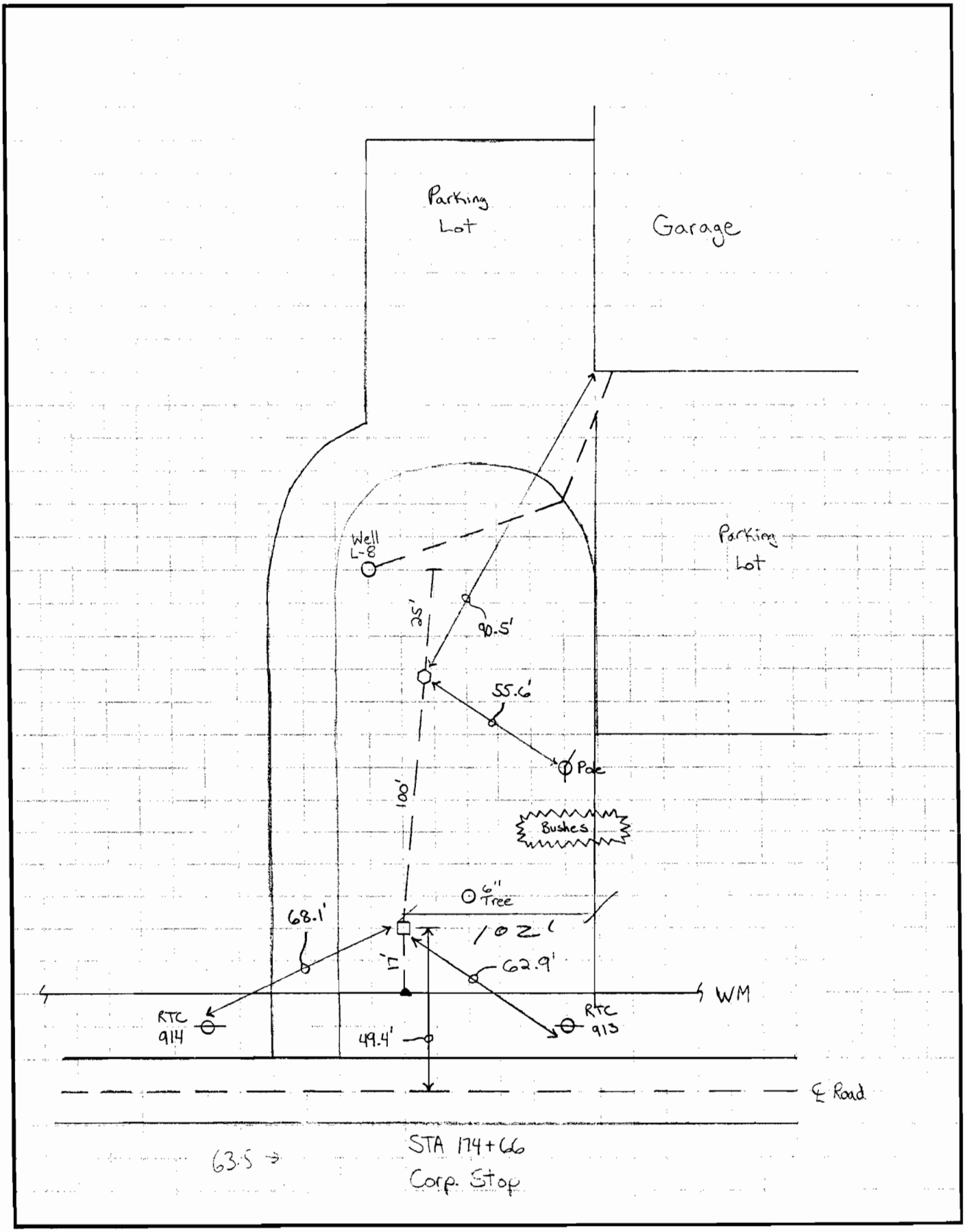

2

Stearns & Wheler Companies

Bill Jones/PJ's Auto Parts
nt

"Trailer Park"
Subject

Date

D004327
Job No.

Comp. By

Checked By

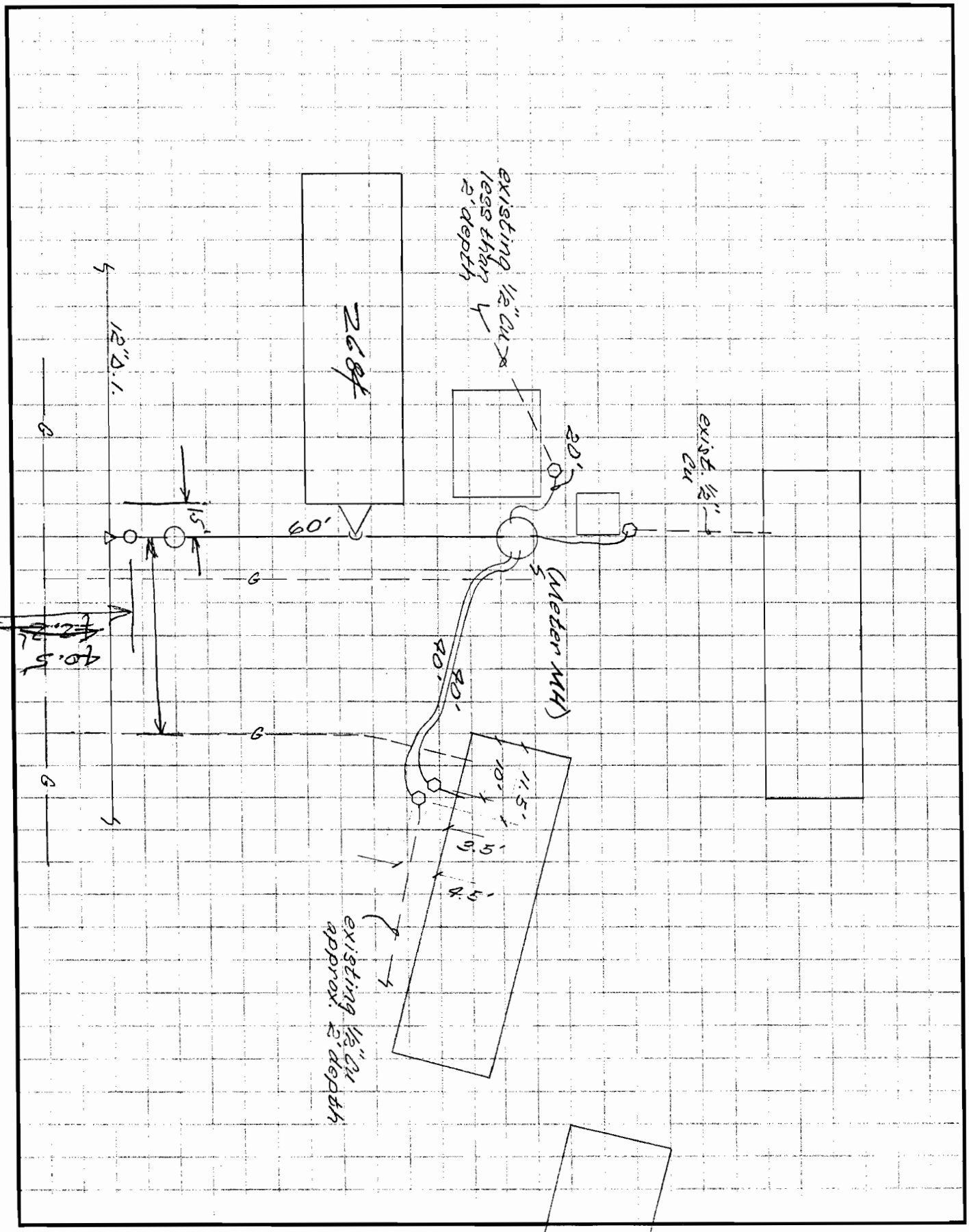

Sheet ___ of ___

Stearns & Wheler, LLC
ENVIRONMENTAL ENGINEERS & SCIENTISTS

Subject McINTYRE #212

Date

Job No.

Comp. By

Checked By

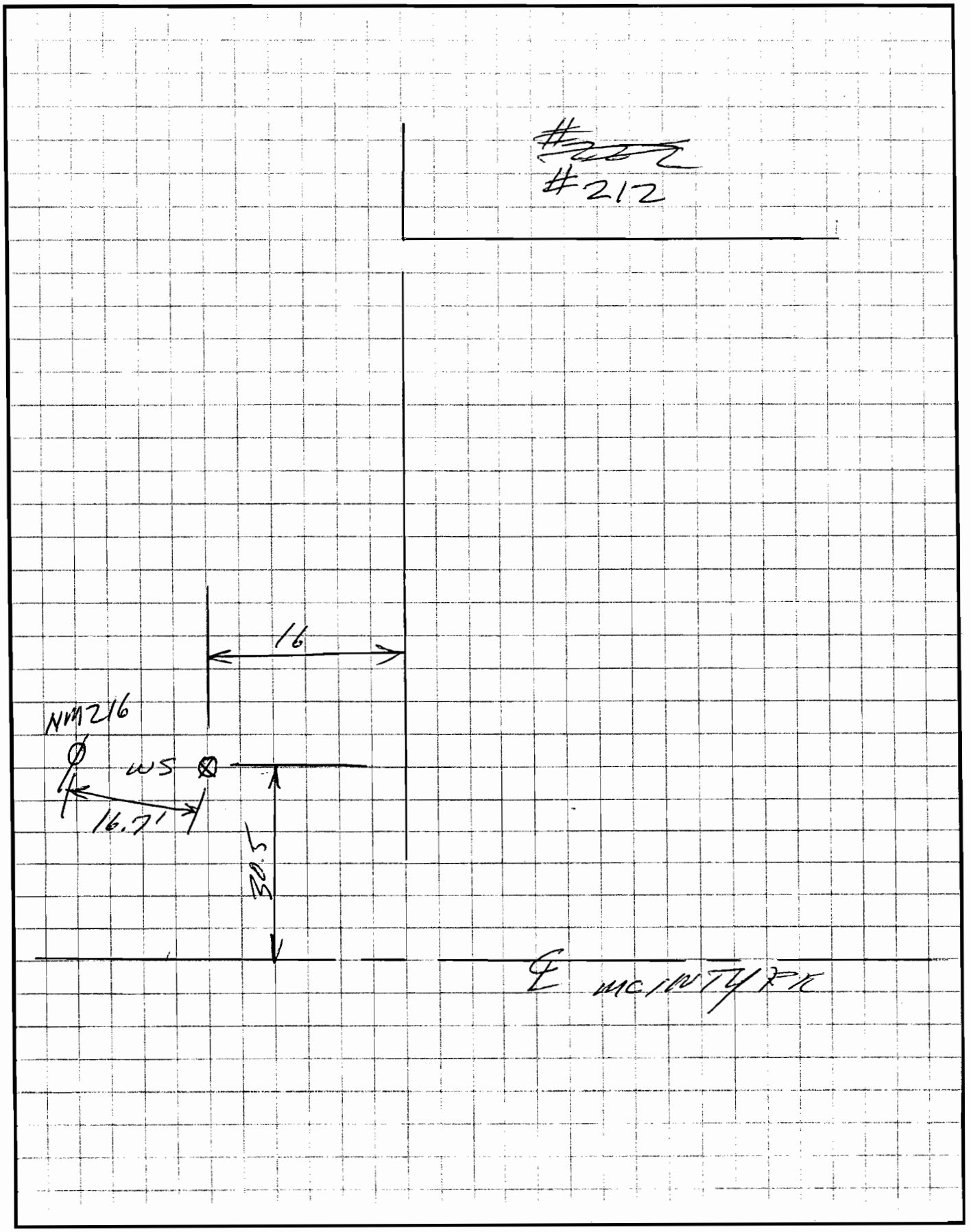

Sheet____ of____

Stearns & Wheler
Companies

ISE #2513 NYS-RTE. 5
ent

D004327
Date Job No.

Subject

Comp. By Checked By

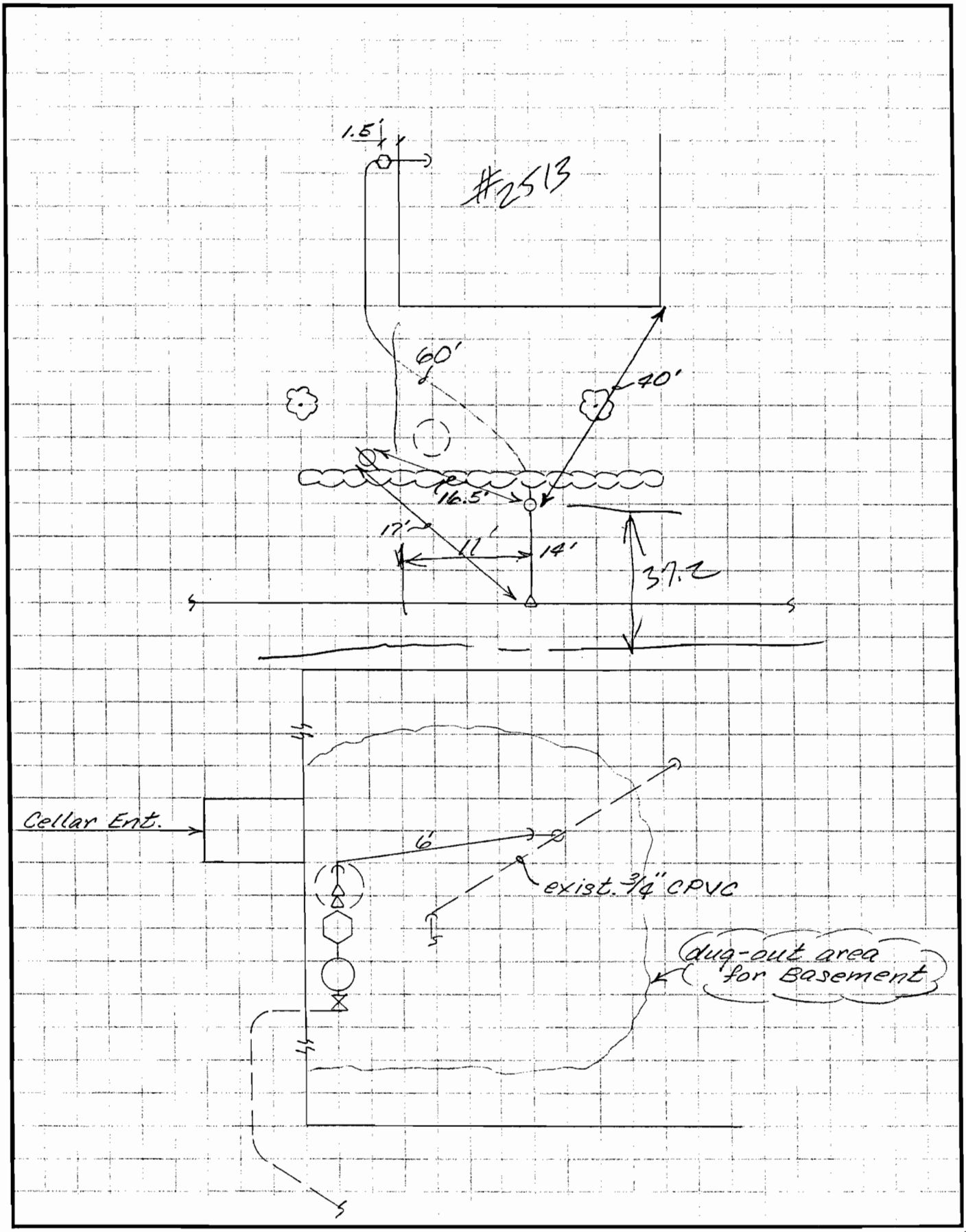

Sheet____ of____

materials

(1) 3/4" Tee
(1) 3/4" FM Adapter
(4) 3/4" 90° els
(1) 3/4" Cplg. (Cu - CPVC)

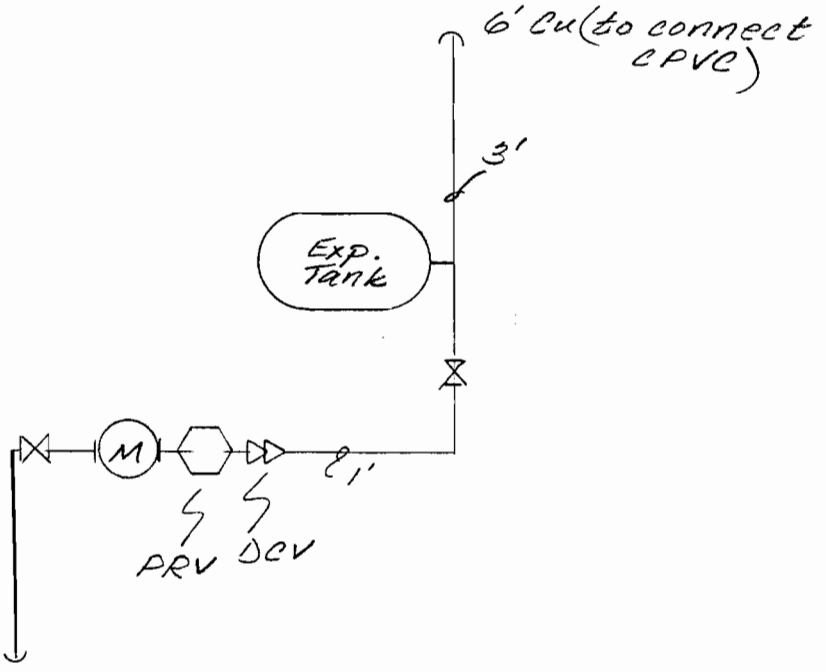

Stearns & Wheler
Companies

Use #2511 NYS-RTE. 5
ent

Date

D004327
Job No.

Subject

Comp. By

Checked By

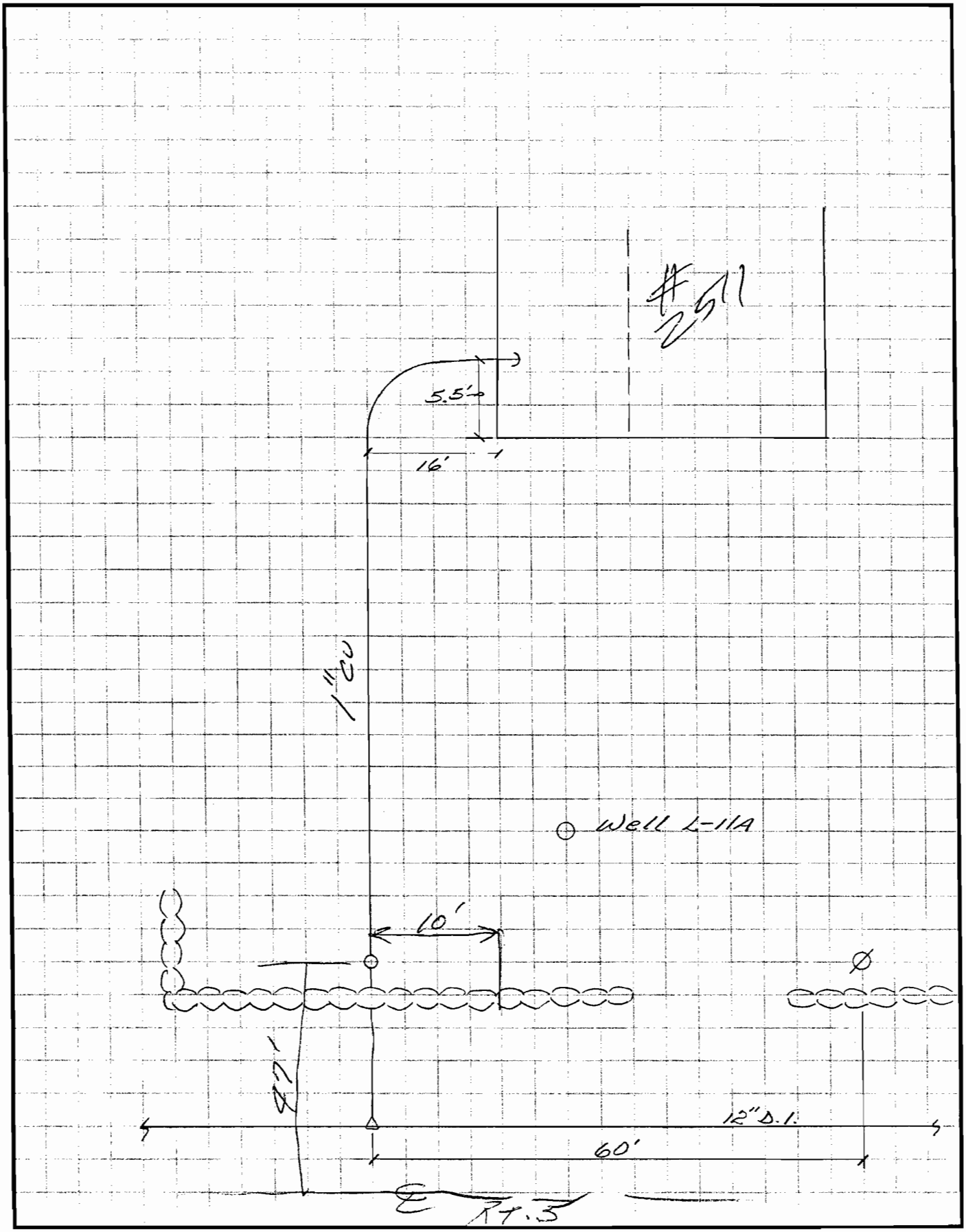

Sheet____ of____

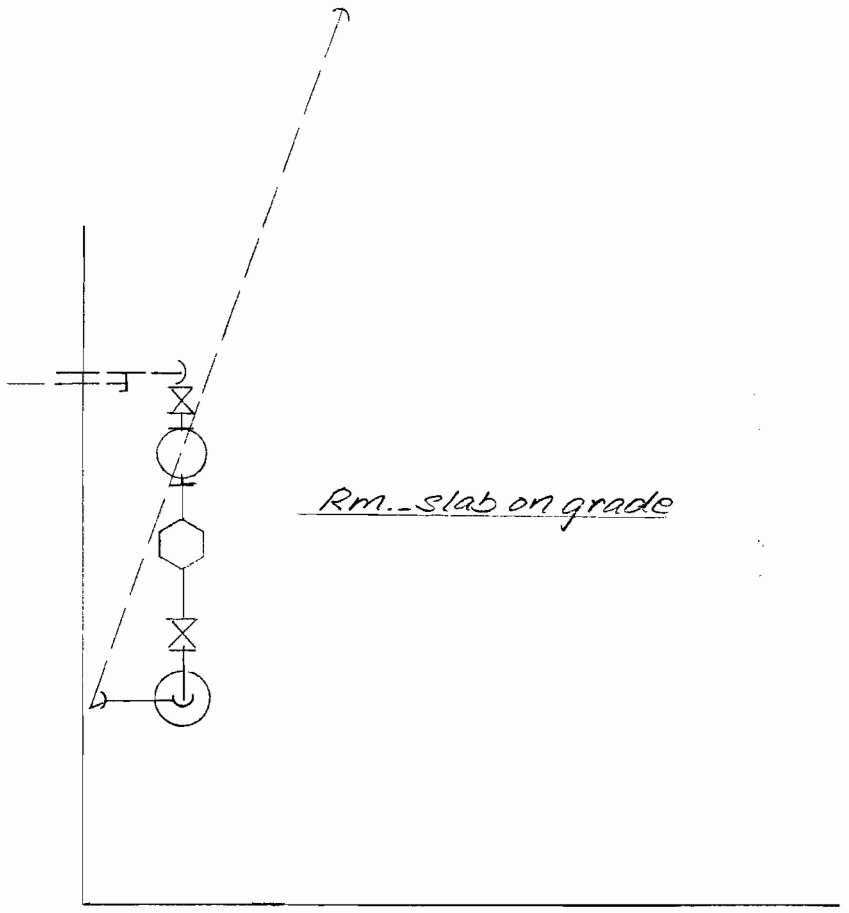

Note; removed the homeowner's water softener and re-plumb the Cu lines.

Stearns & Wheler Companies

Lehigh Valley RR Derailment Site	10-18 02	[illegible]
nt	Date	Job No.
TSS Foam Industries - 2770 NYS Route 5	Mike Polek	
Subject	Comp. By	Checked By

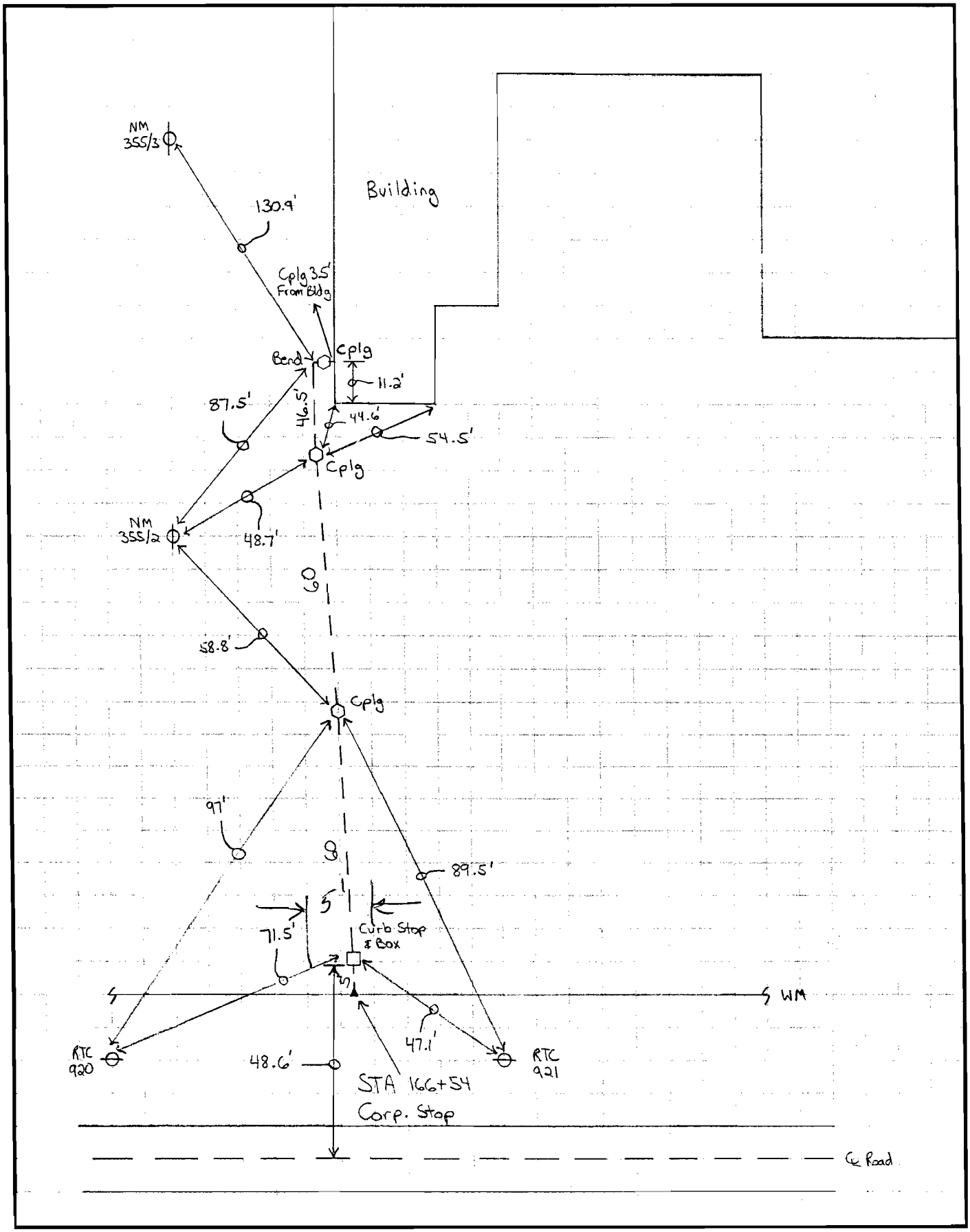

120

Sheet____ of____

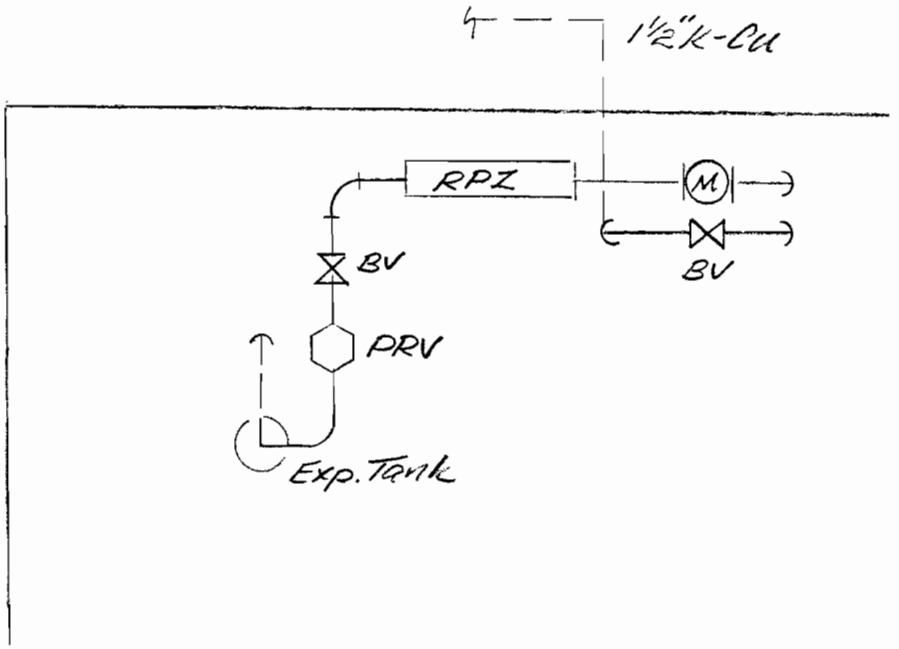
1½"k-Cu
RPZ
M
BV
BV
PRV
Exp. Tank

Stearns & Wheler
Companies

"LIMEROCK SPEEDWAY"
ent

D004327
Date Job No.

2"Cu Svce. Meter MH to
Subject the Concession Bldg.

Comp. By Checked By

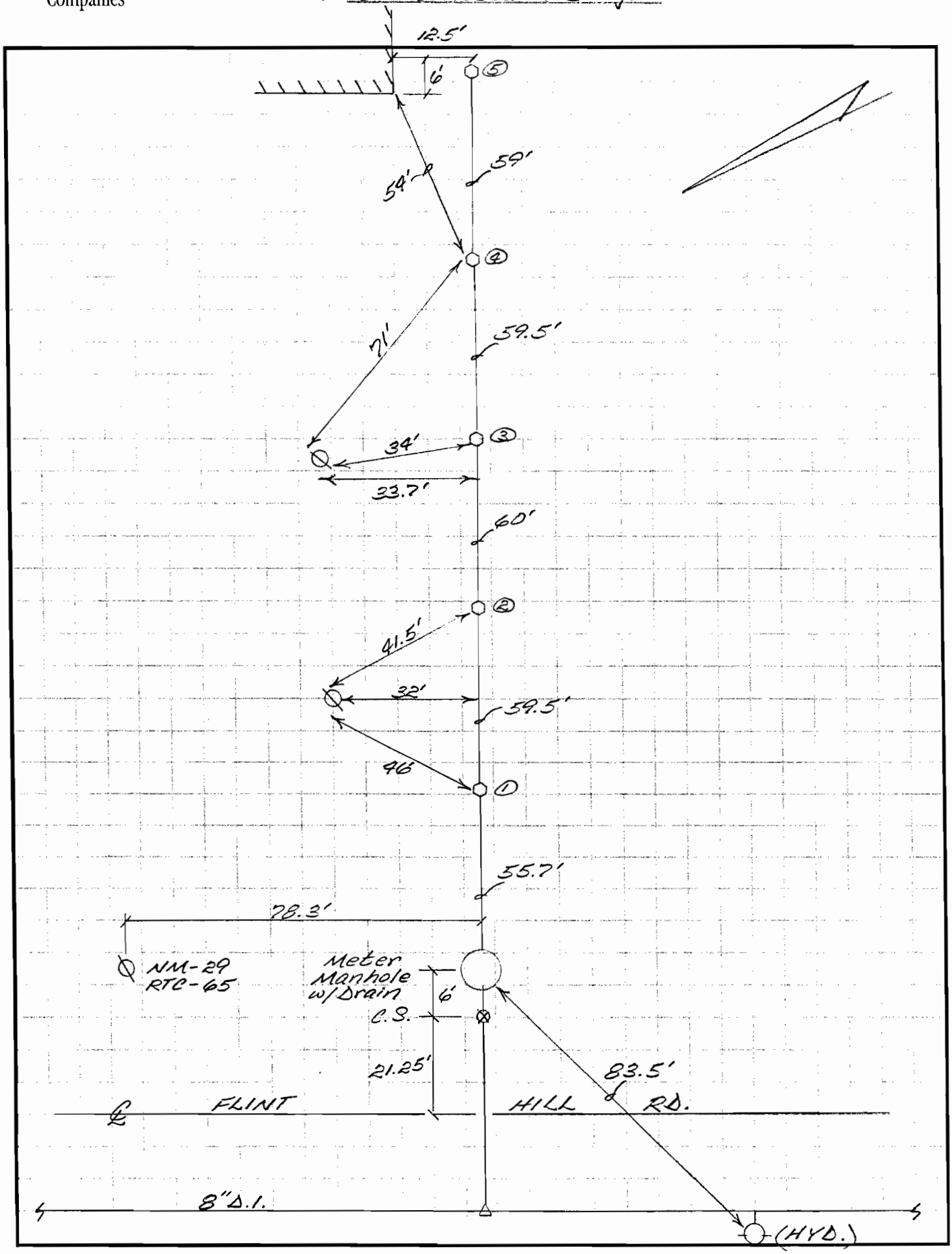

Sheet___ of___

Stearns & Wheler
Companies

LIMEROCK SPEEDWAY"
ent

D004327
Date Job No.

2"Cu Svce. Bldg. Concession
Subject to Restrooms, through MH

Comp. By Checked By

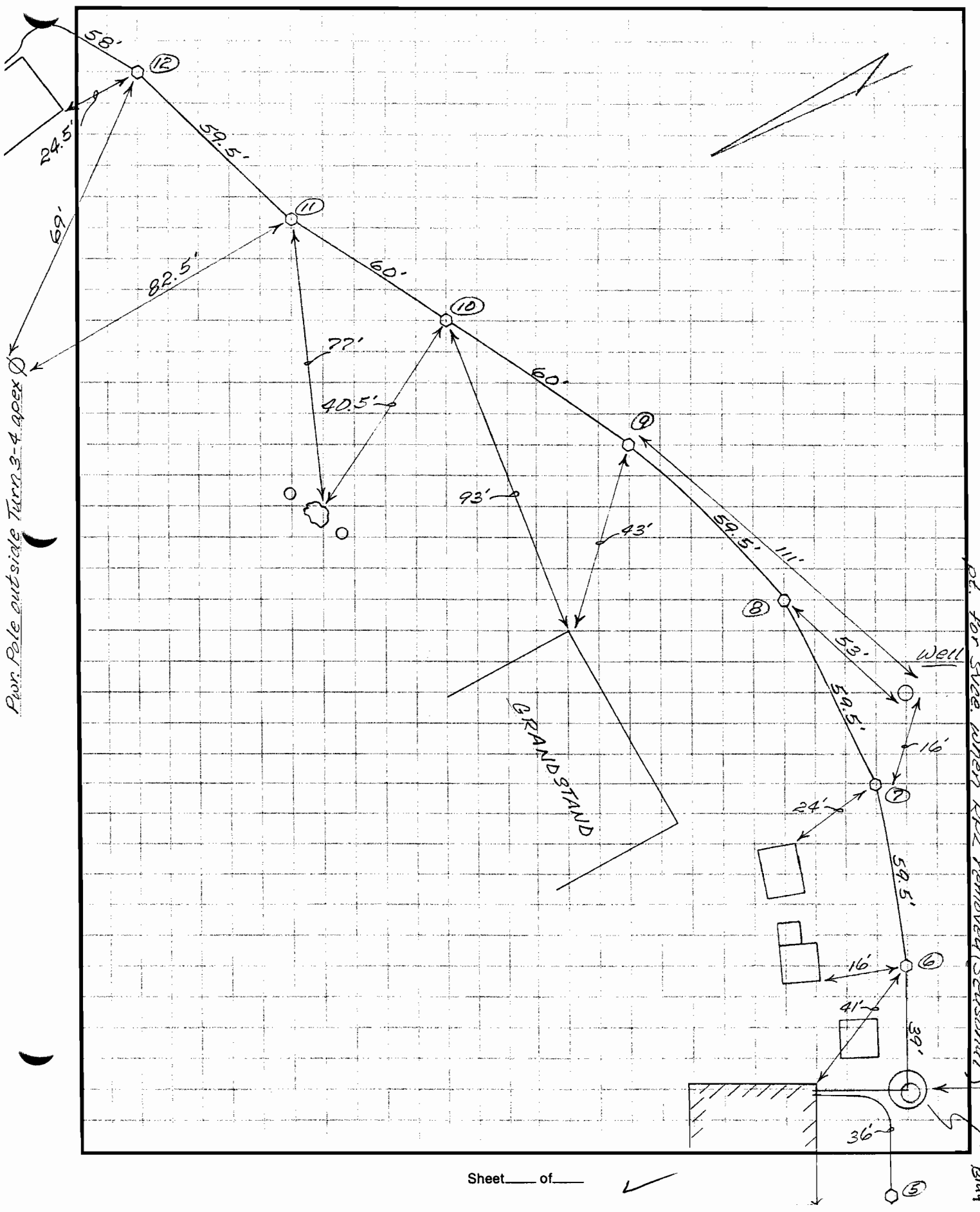

Sheet ___ of ___

RPZ_ FEBCO model 860, 2H, Type RP, Serial No. 04493

PRV_ WATTS 2_U_5B, Serial No. 0239W

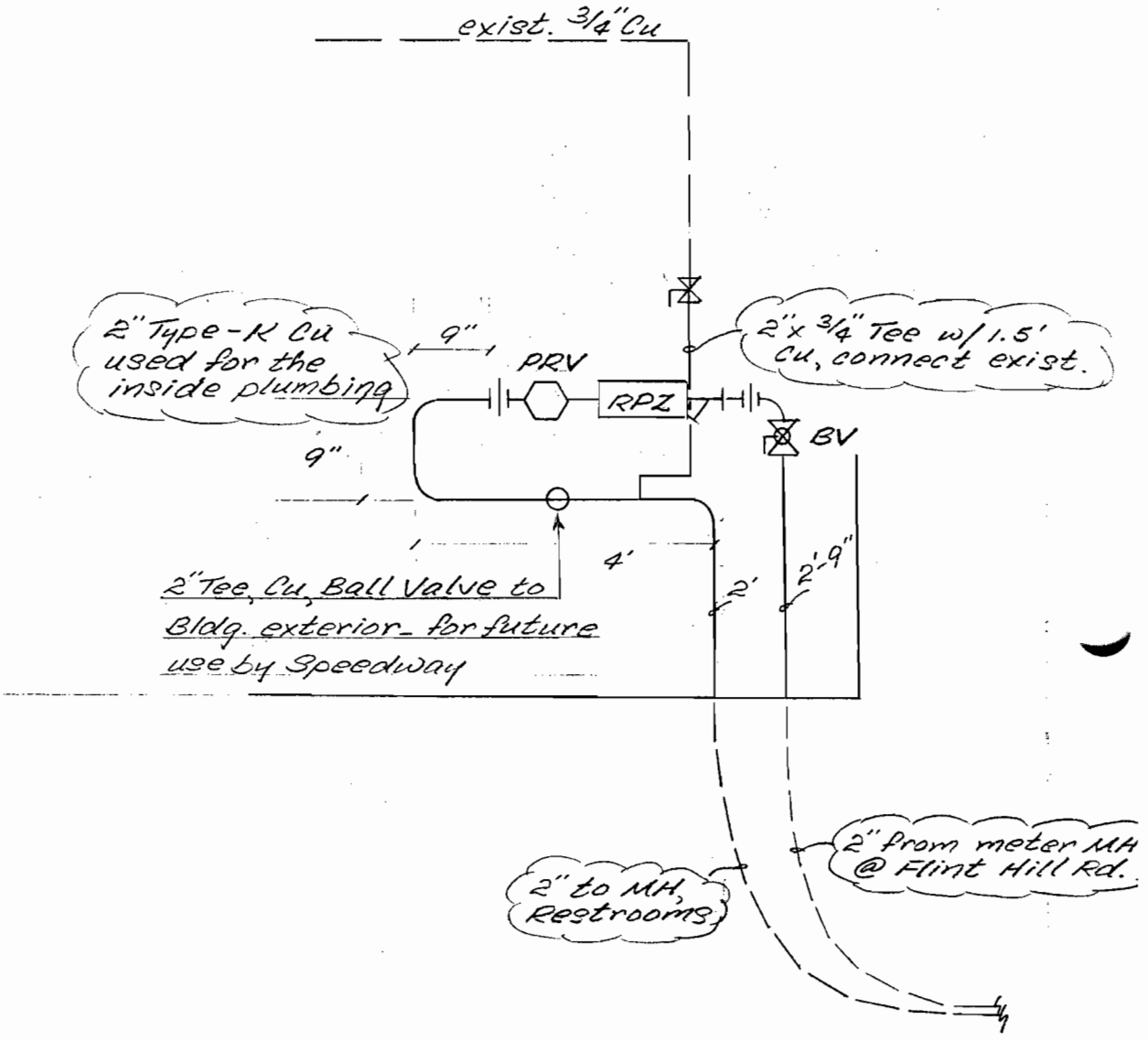

Stearns & Wheler Companies

Hse./Trlr. #232 McIntyre
nt

Date

D004327
Job No.

Subject

Comp. By

Checked By

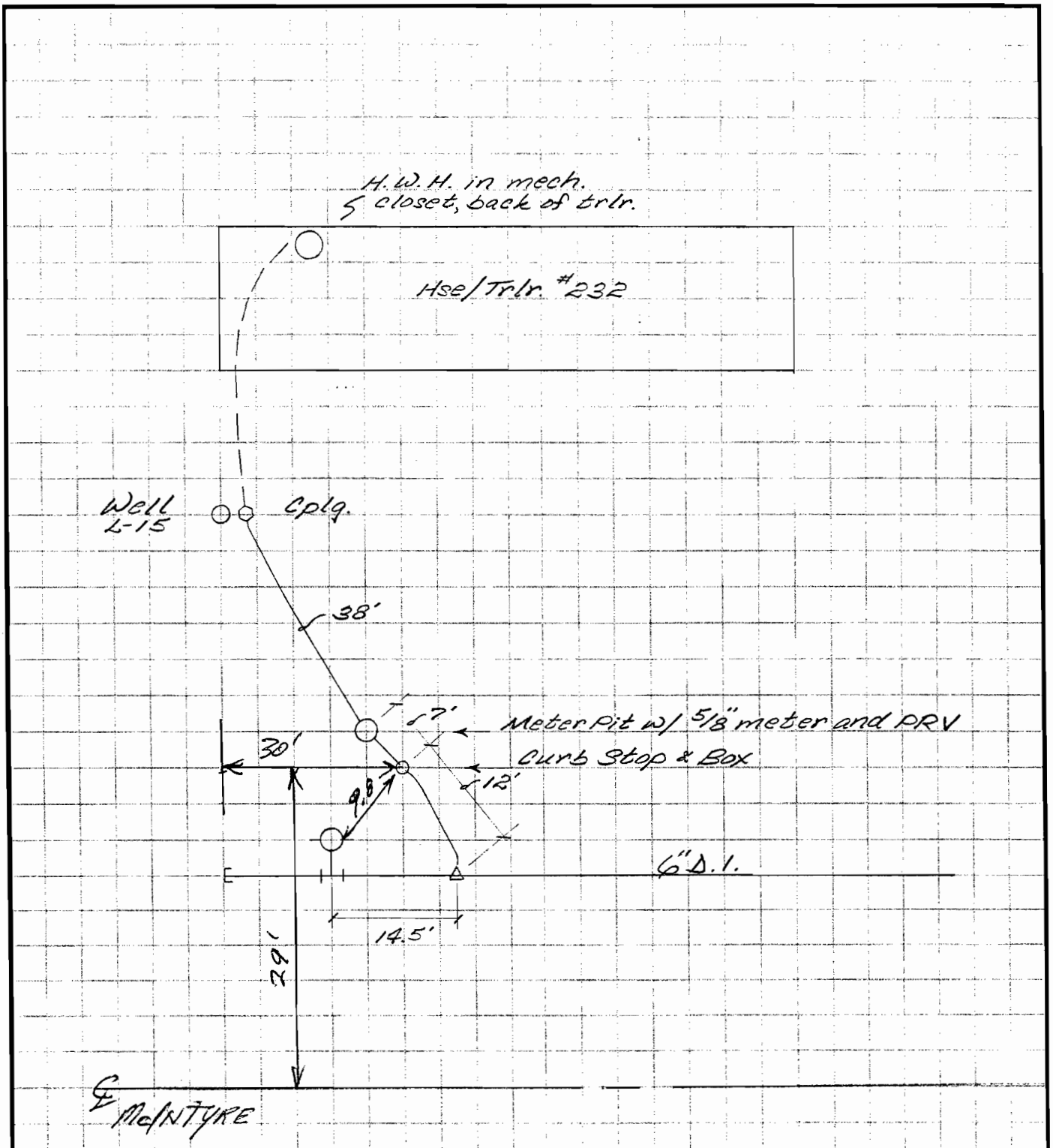

Sheet____ of____

Stearns & Wheler
Companies

Lehigh Valley RR Derailment Site	10-21-02
nt	Date
House # 2830 - NYS Route 5	Mike Polek
Subject	Comp. By

Job No.

Checked By

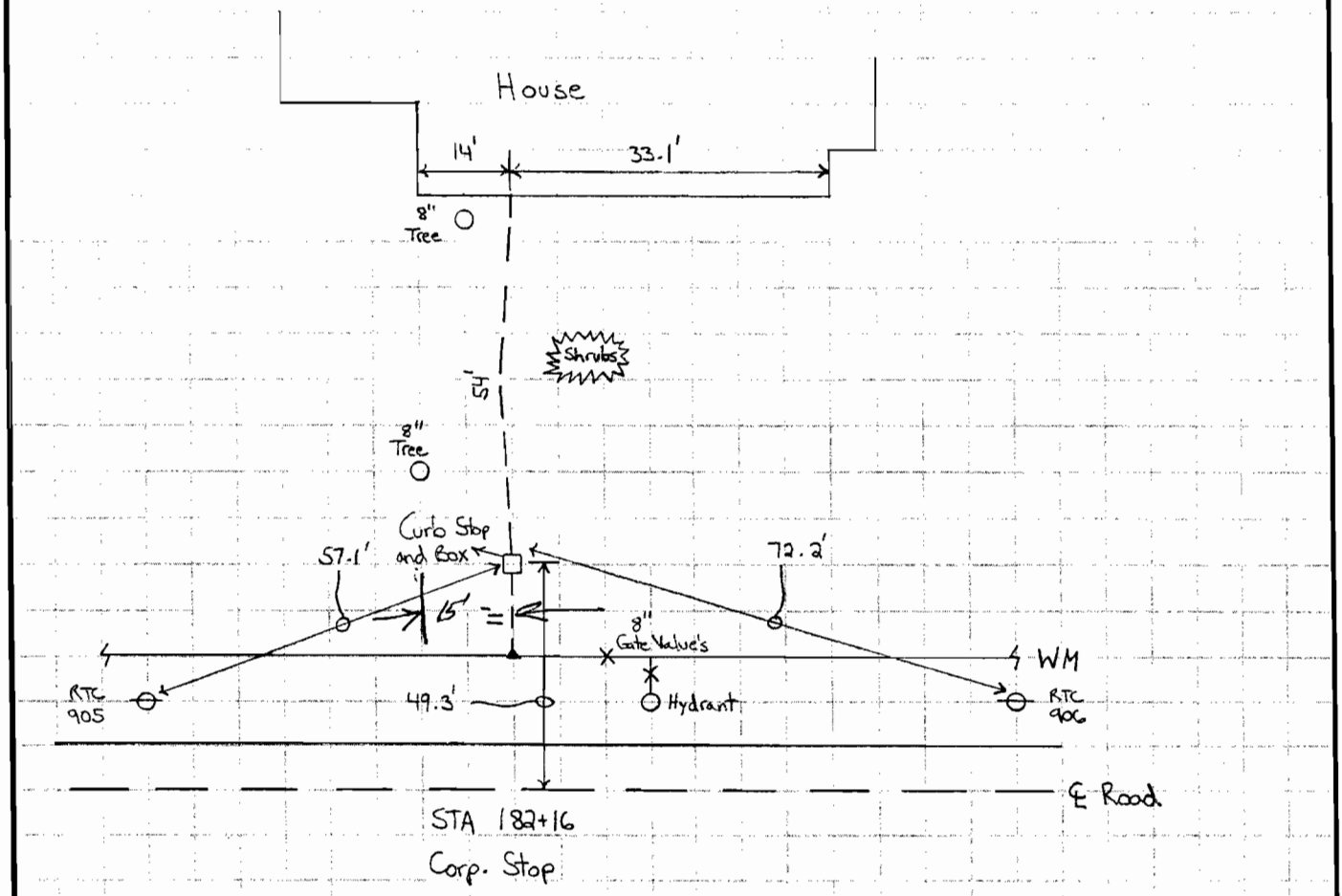

Stearns & Wheler
Companies

nt | Date | Job No.

Subject | Comp. By | Checked By

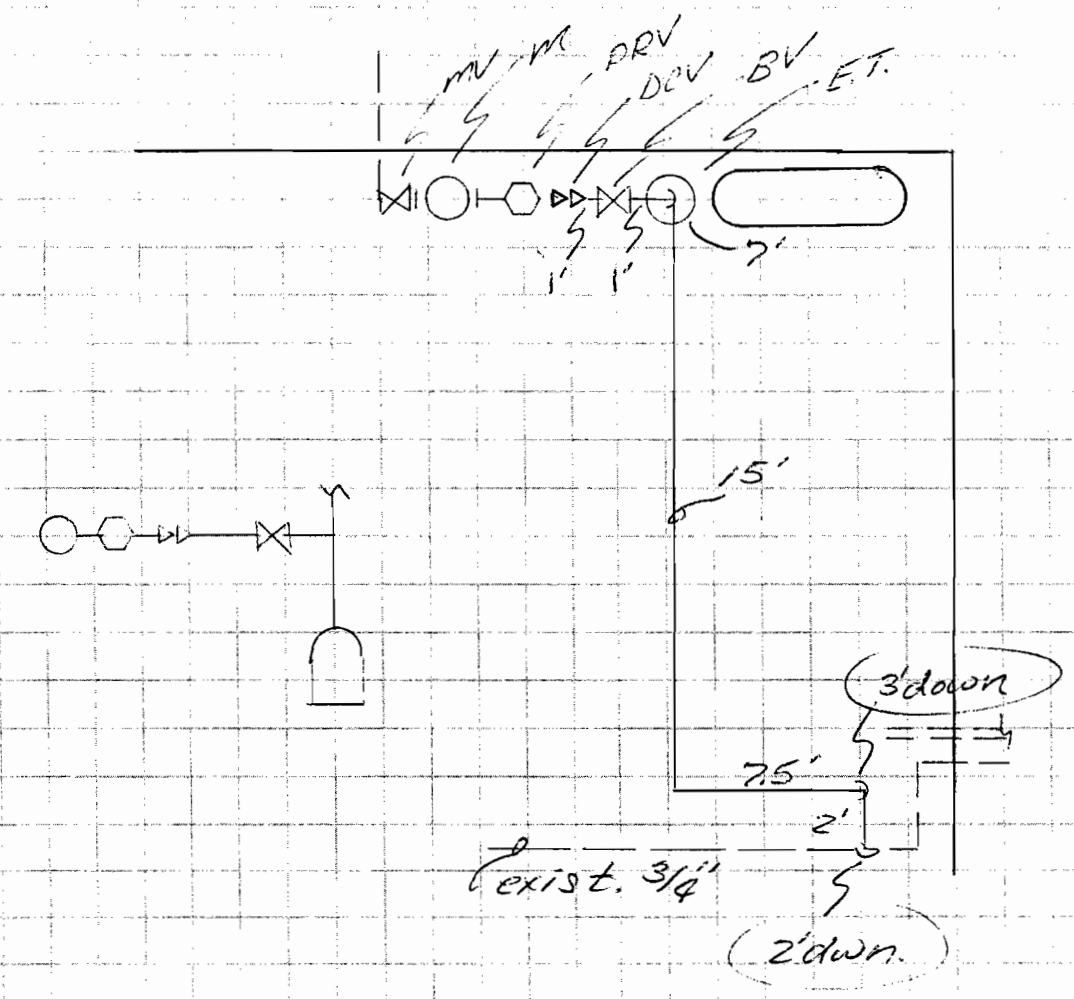

Stearns & Wheler Companies

Lehigh Valley RR Detachment Site	10-29-02	W04327
nt	Date	Job No.
NYS Route 5 – House # 2837	Mike Polek	
Subject	Comp. By	Checked By

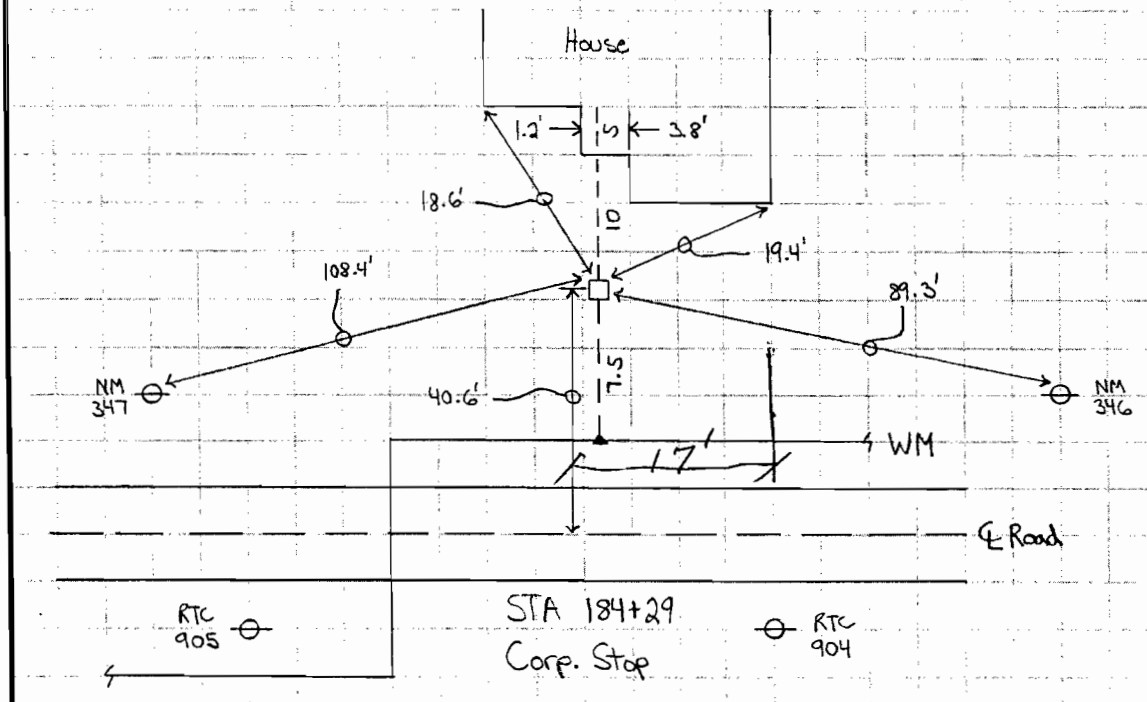

Stearns & Wheler, LLC
ENVIRONMENTAL ENGINEERS & SCIENTISTS

Subject: Hse #2837 NYS-RTE. 5

Date:

Job No.: 0004327

Comp. By:

Checked By:

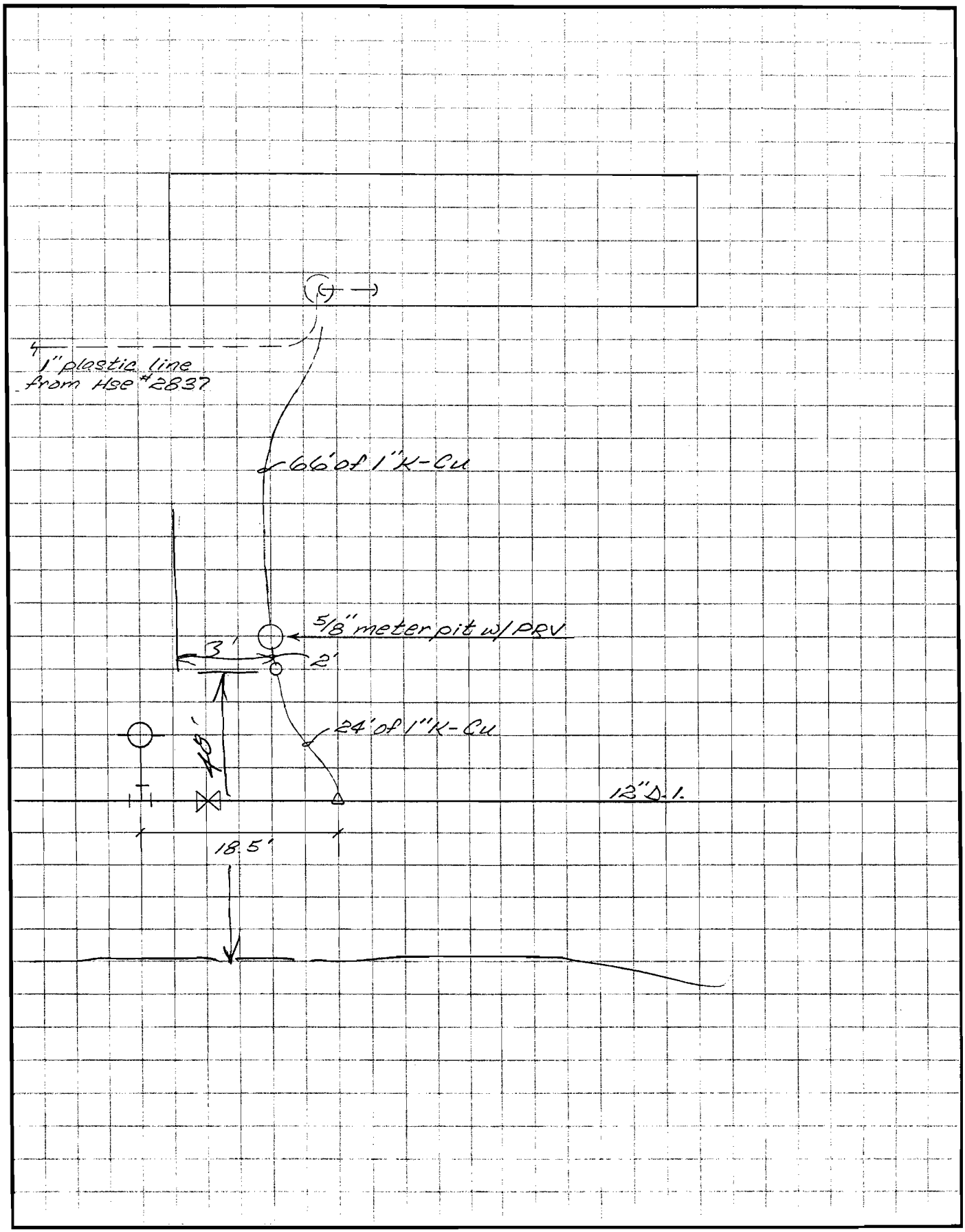

Sheet ____ of ____

Stearns & Wheler Companies

Hse. #2401 - #2403 NYS-RT.
ent

D004327
Date Job No.

(2) 1.5" Cu Svces.
Subject

Comp. By Checked By

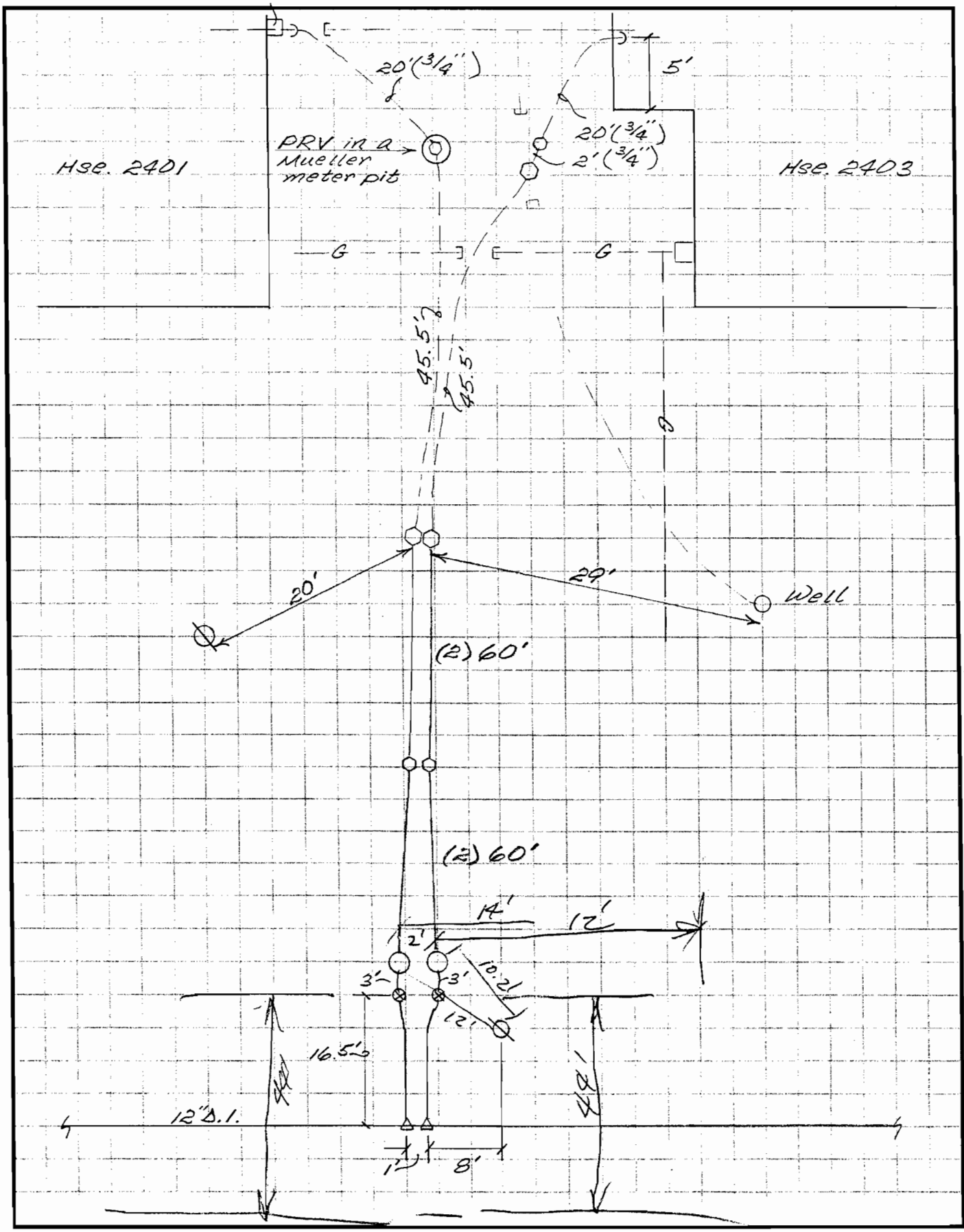

120
45.5
22.0
187.5

Sheet____ of____

Hse #2403

materials:

3/4" x 1" brass bushing
1" brass 90° el
1" close nipple
1" galv. tee
1" x 3/4" brass bushing
1" x 1/2" galv. bushing

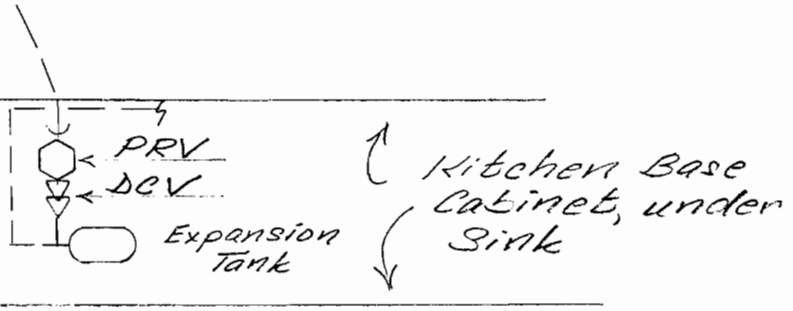

Stearns & Wheler, LLC
ENVIRONMENTAL ENGINEERS & SCIENTISTS

Subject: 153 RANGER DRIVE — SPRING ST.

Date | Job No.

Comp. By | Checked By

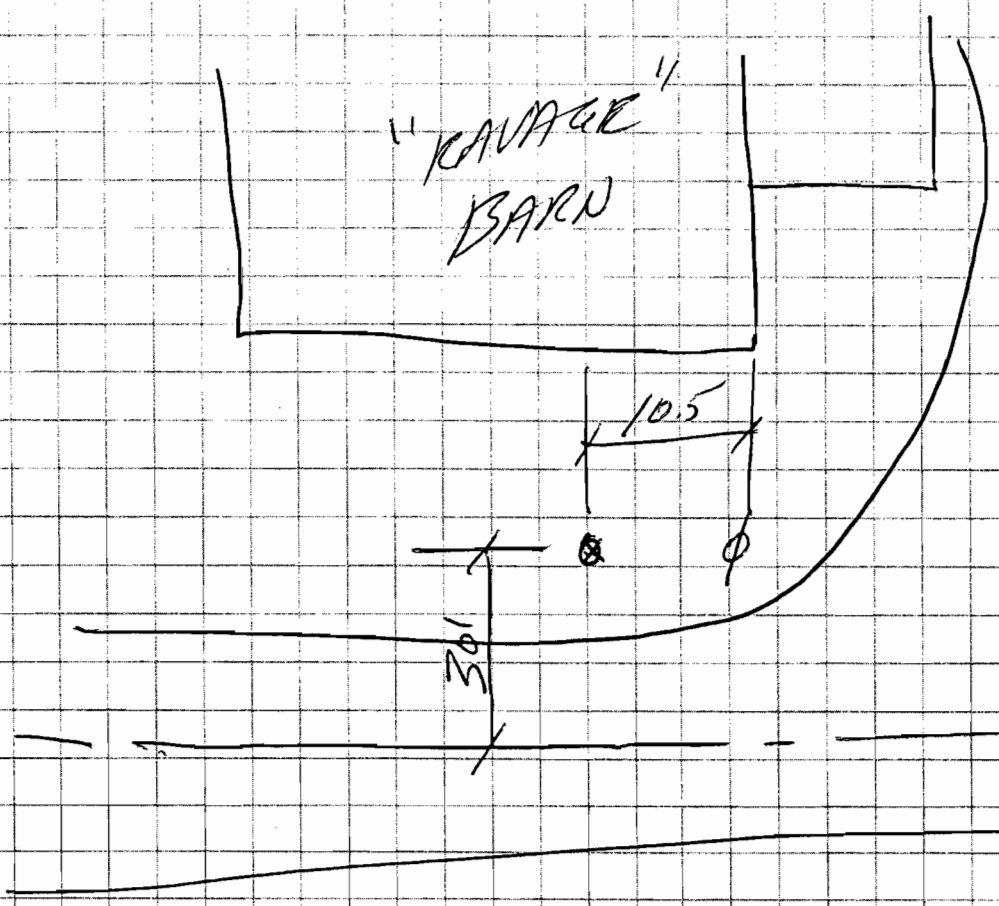

Sheet ____ of ____

Stearns & Wheler
Companies

Hses. #199 & #203 Spring St.

nt | Date | Job No.

Subject | Comp. By | Checked By

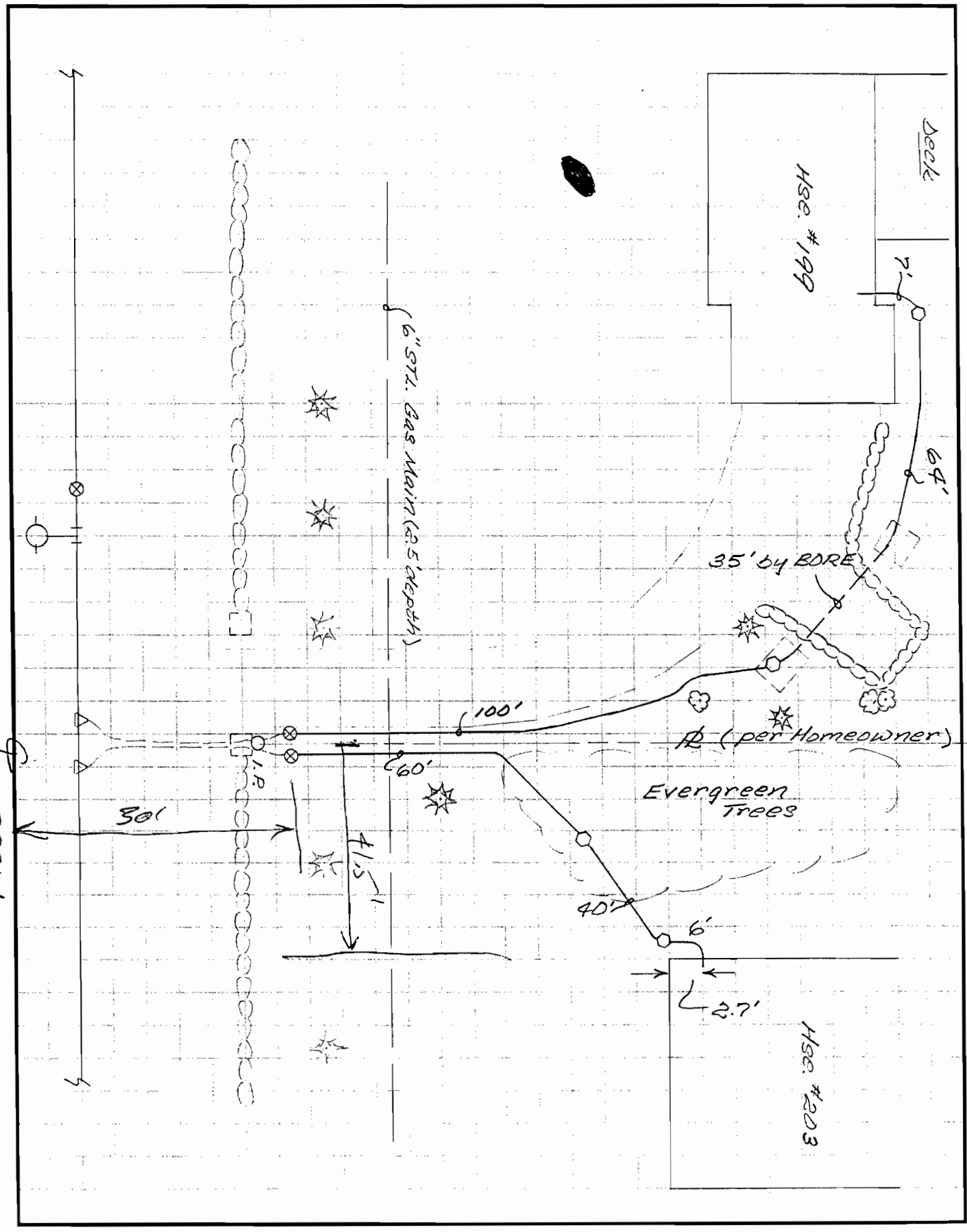

Sheet____ of____

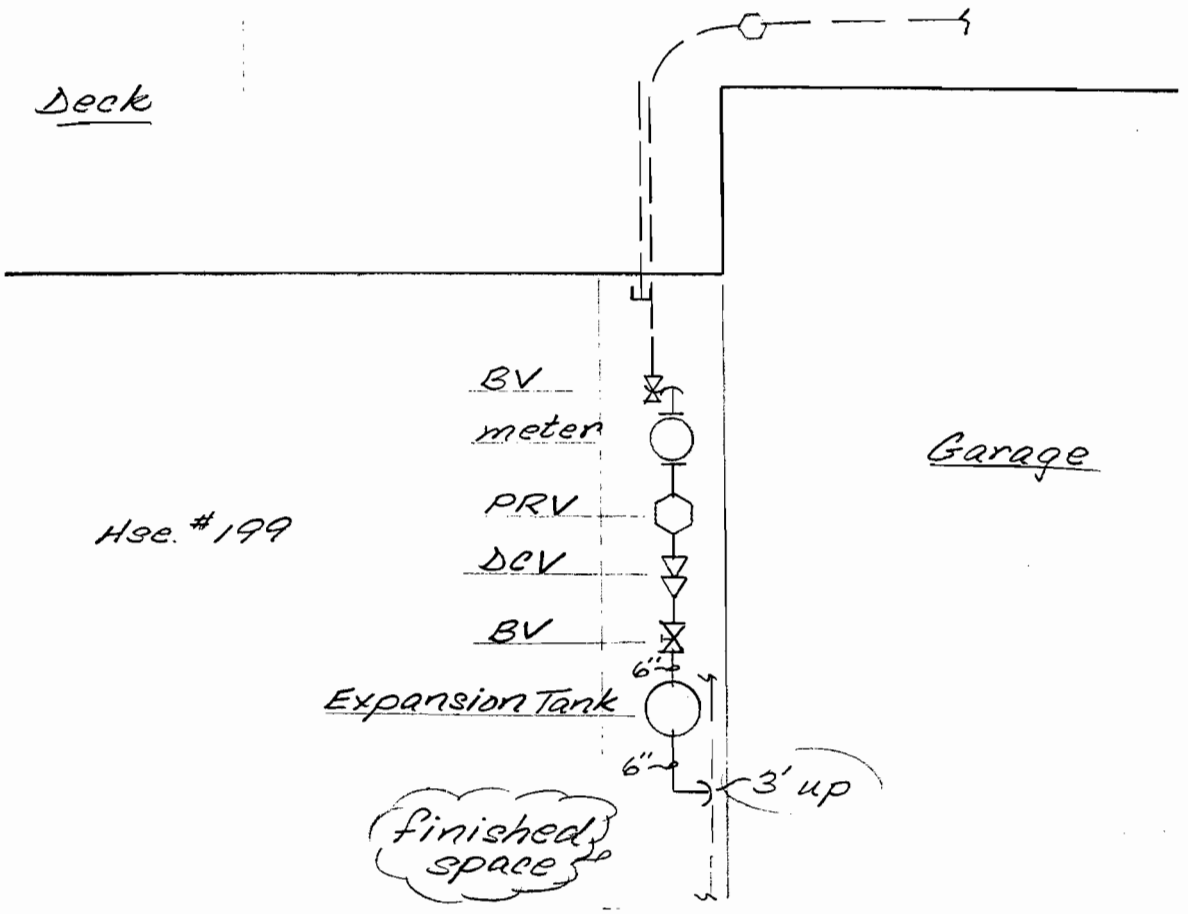
Deck
BV
meter
PRV
DCV
BV
Expansion Tank
6"
6"
3' up
Garage
Hse. #199
finished space

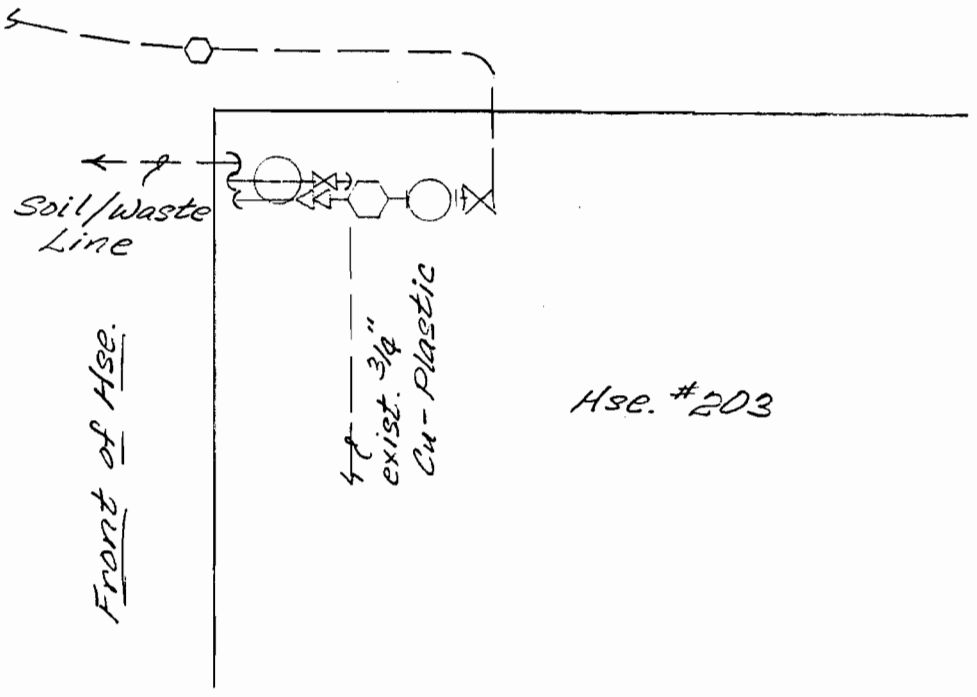
Soil/Waste Line
Front of Hse.
exist. 3/4" Cu - Plastic
Hse. #203

Stearns & Wheler
Companies

nt

28 Spring St.

Subject

Date Job No.

Comp. By Checked By

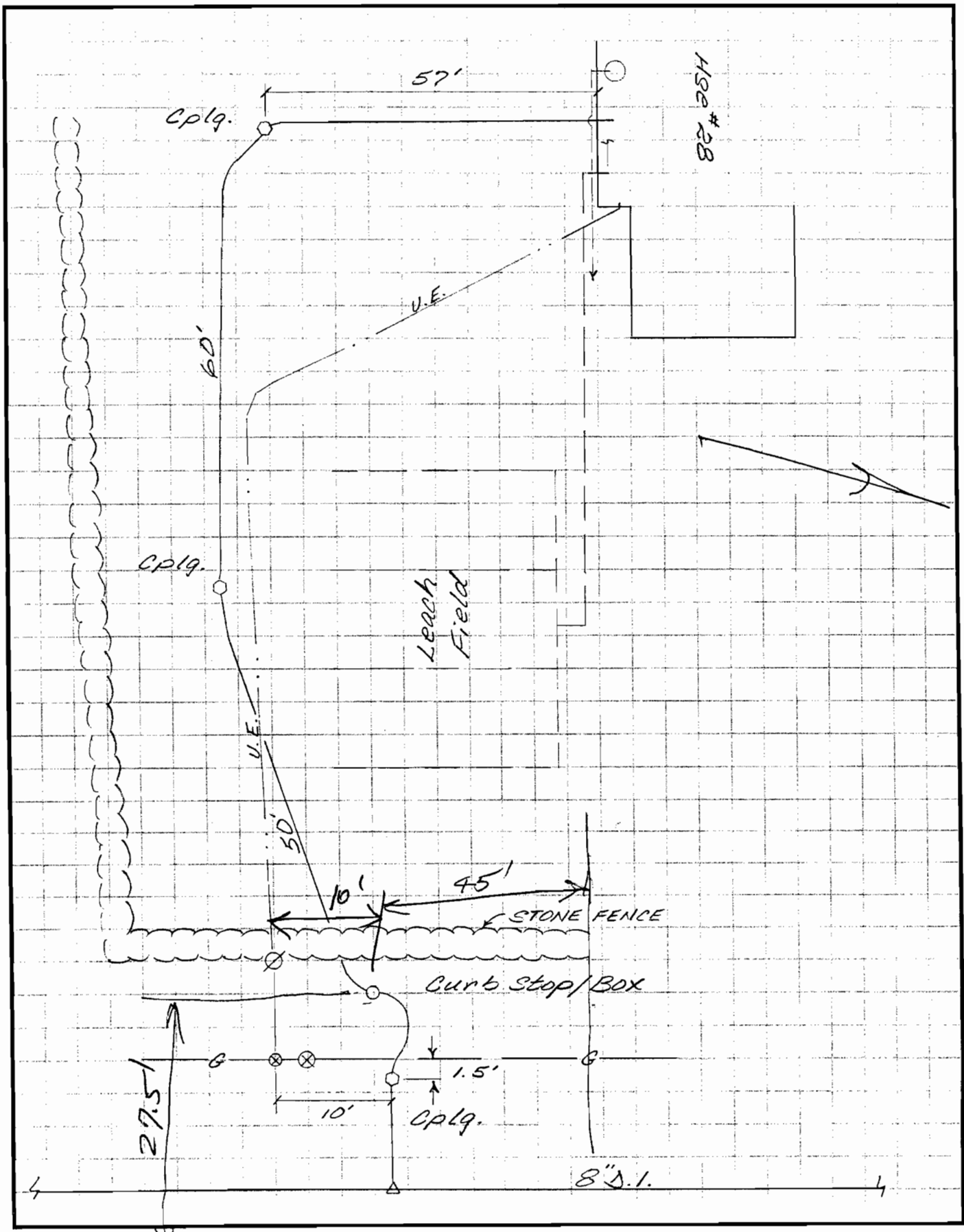

Sheet of

SPRING

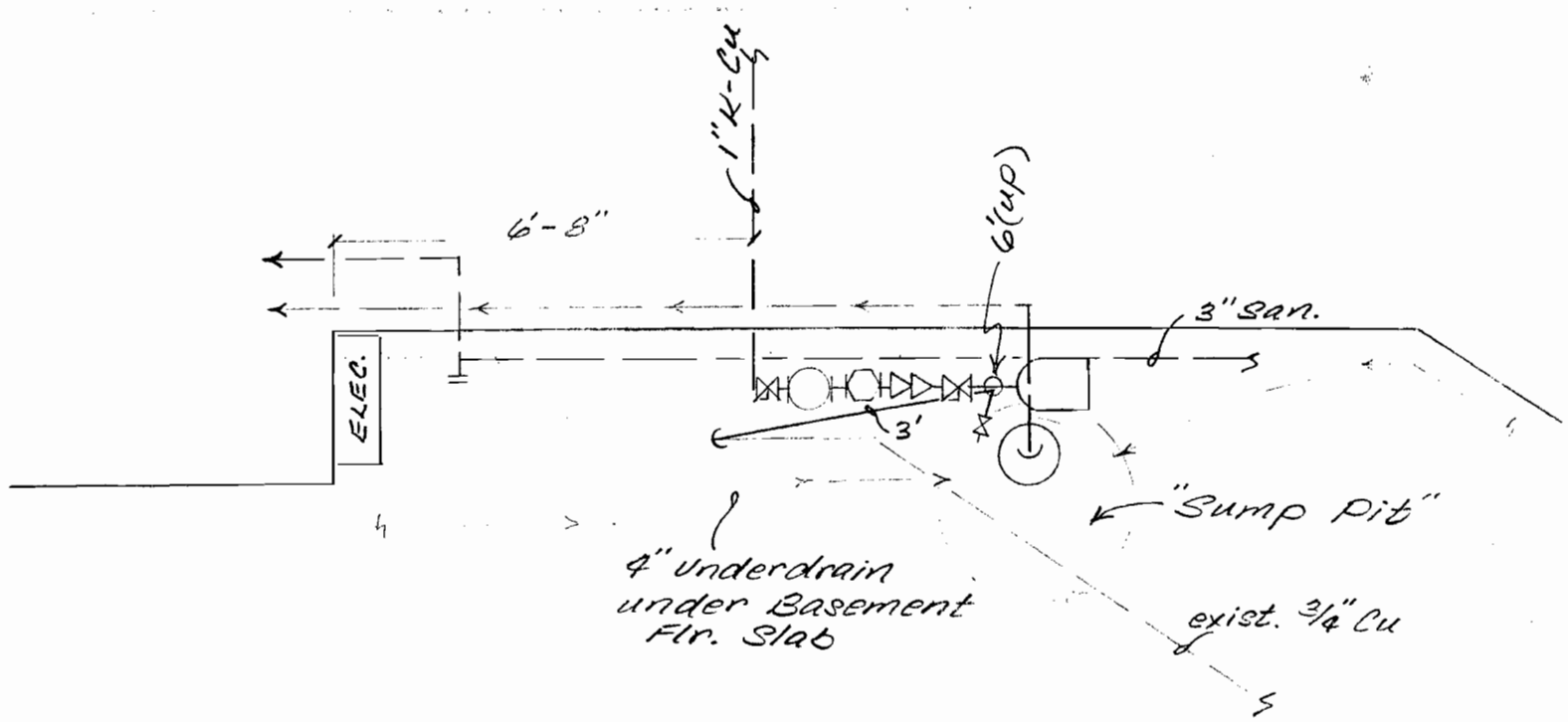
1" K-Cu
6'-8"
6'(up)
3" San.
ELEC.
3'
"Sump Pit"
4" Underdrain
under Basement
Flr. Slab
exist. 3/4" Cu

Stearns & Wheler, LLC
ENVIRONMENTAL ENGINEERS & SCIENTISTS

Subject: 18 Spring Street

Date

Job No.

Comp. By

Checked By

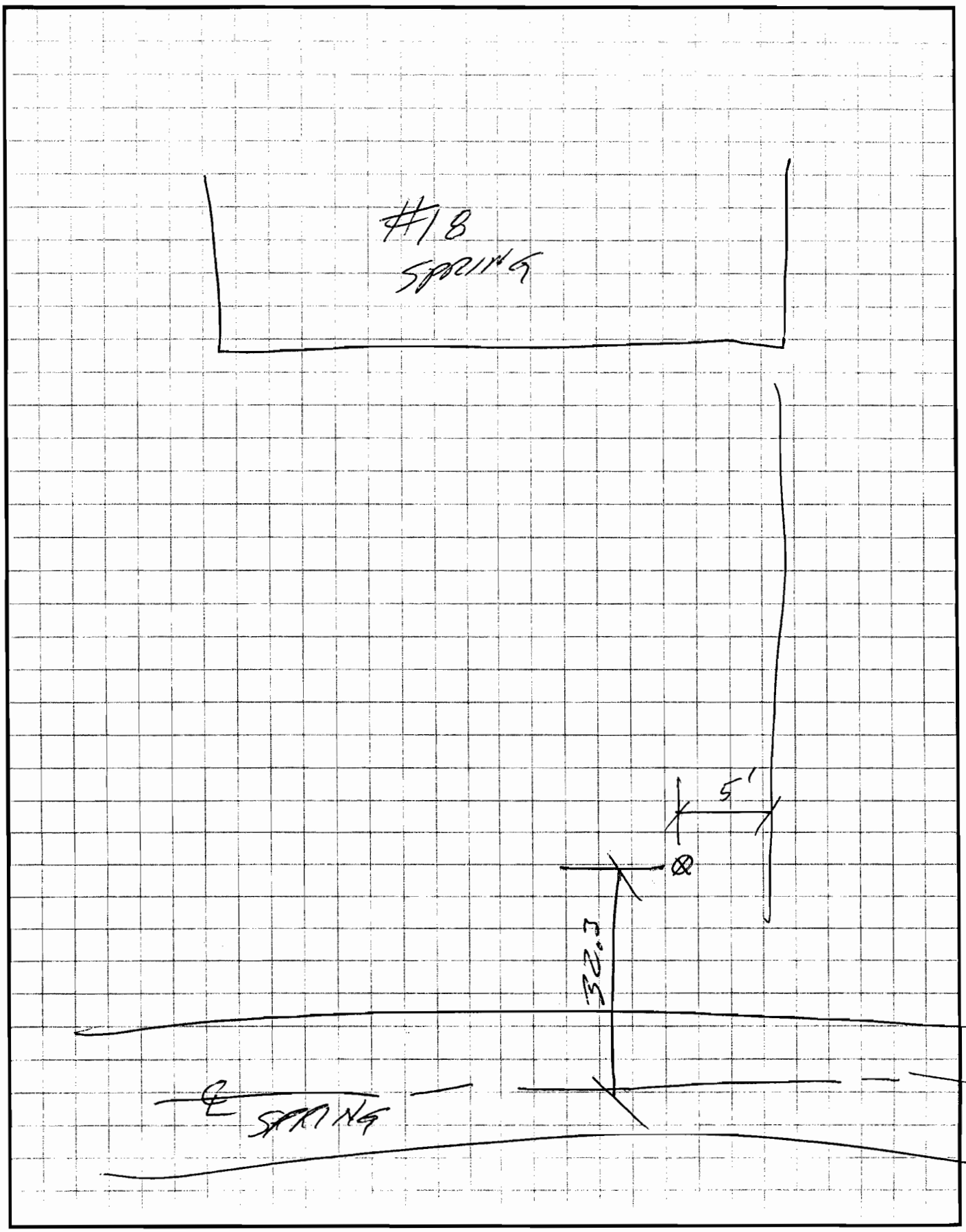

Sheet ___ of ___

Stearns & Wheler Companies

Hse. #165 Spring St.
nt

Date | Job No.

Subject | Comp. By | Checked By

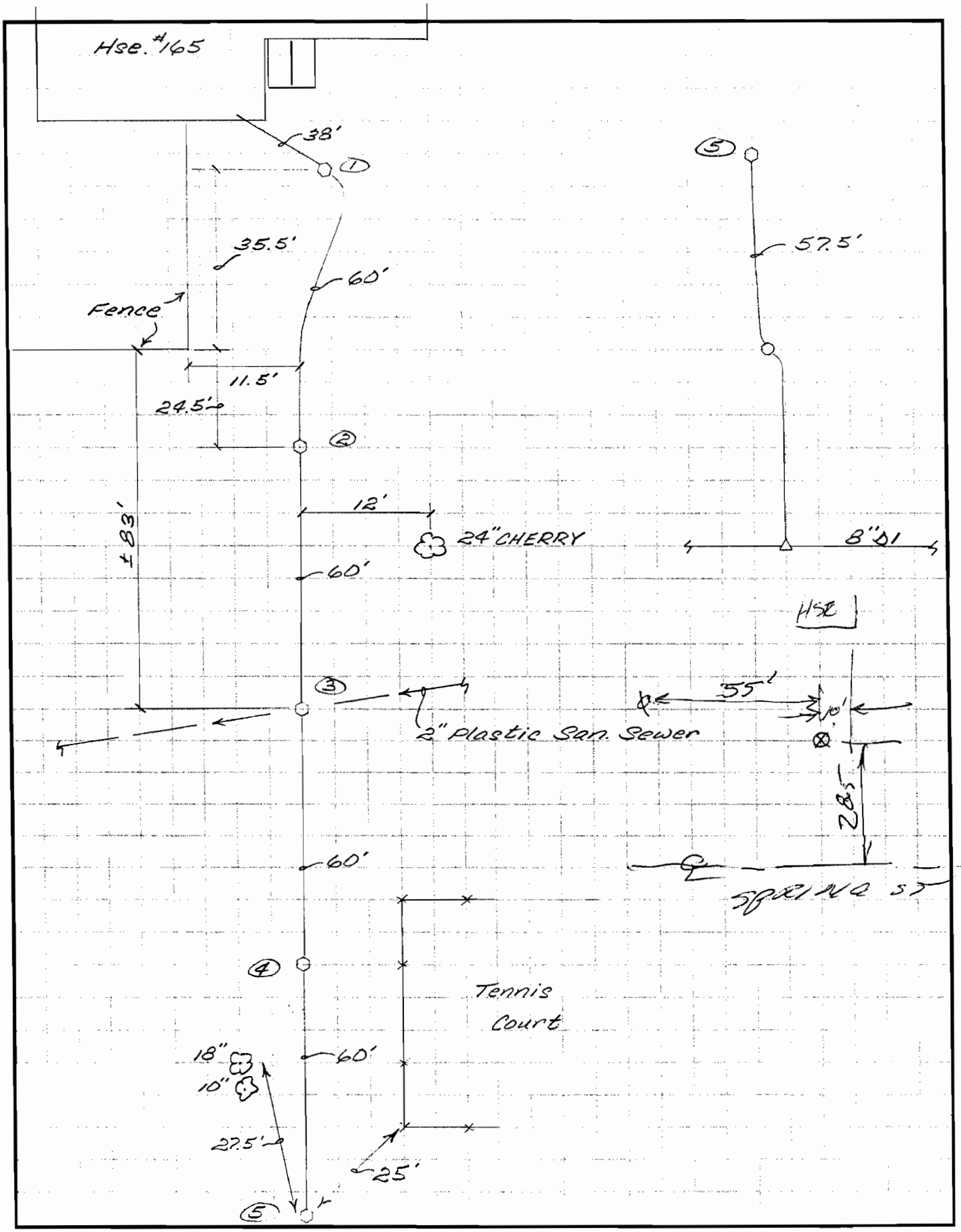

Sheet____ of____

RPZ_ FEBCO mdl. 860, 1½"
Serial No. H04254

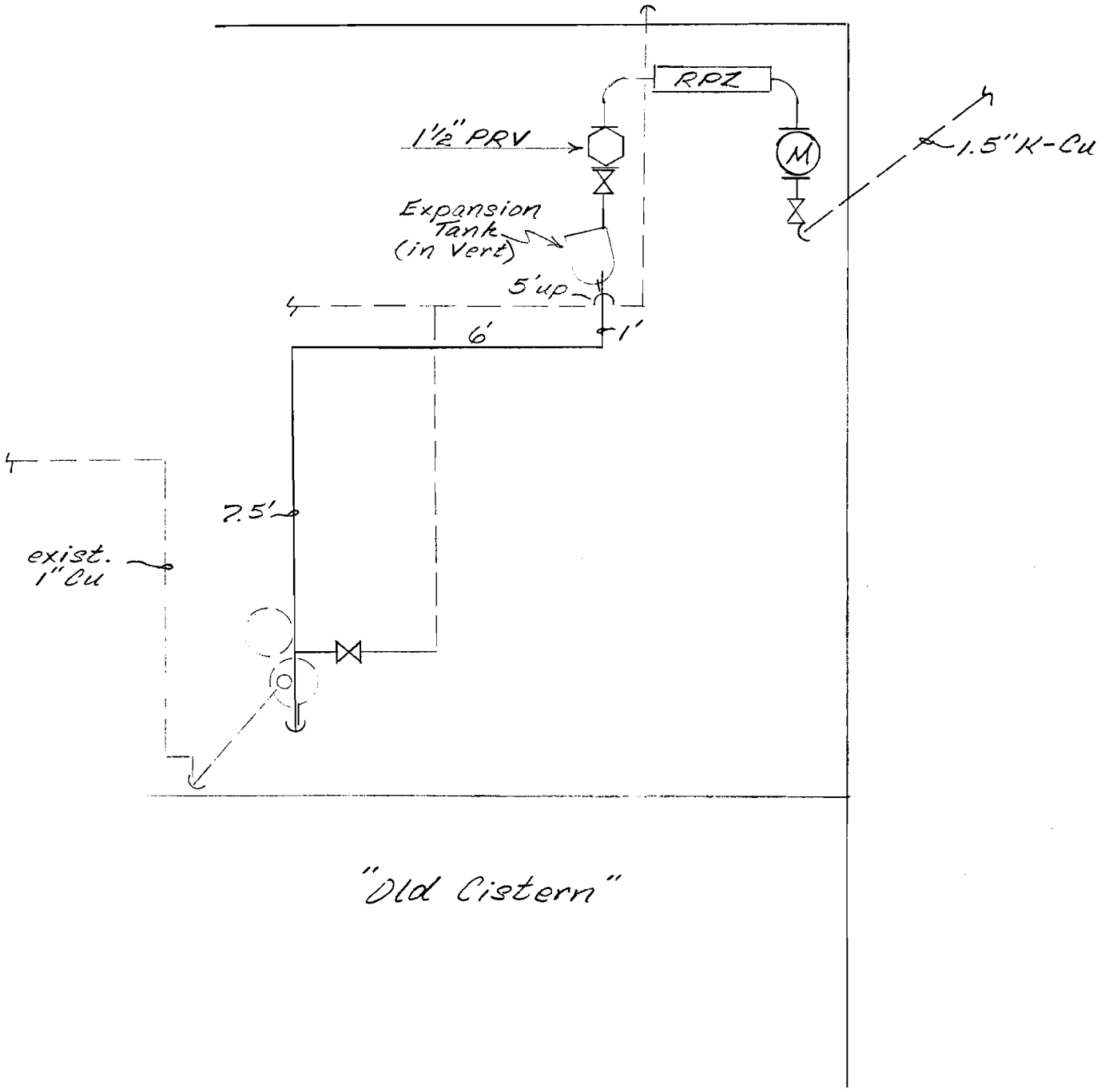

Stearns & Wheler
Companies

Hse. #200 Spring St.
nt

Date | Job No.

Subject | Comp. By | Checked By

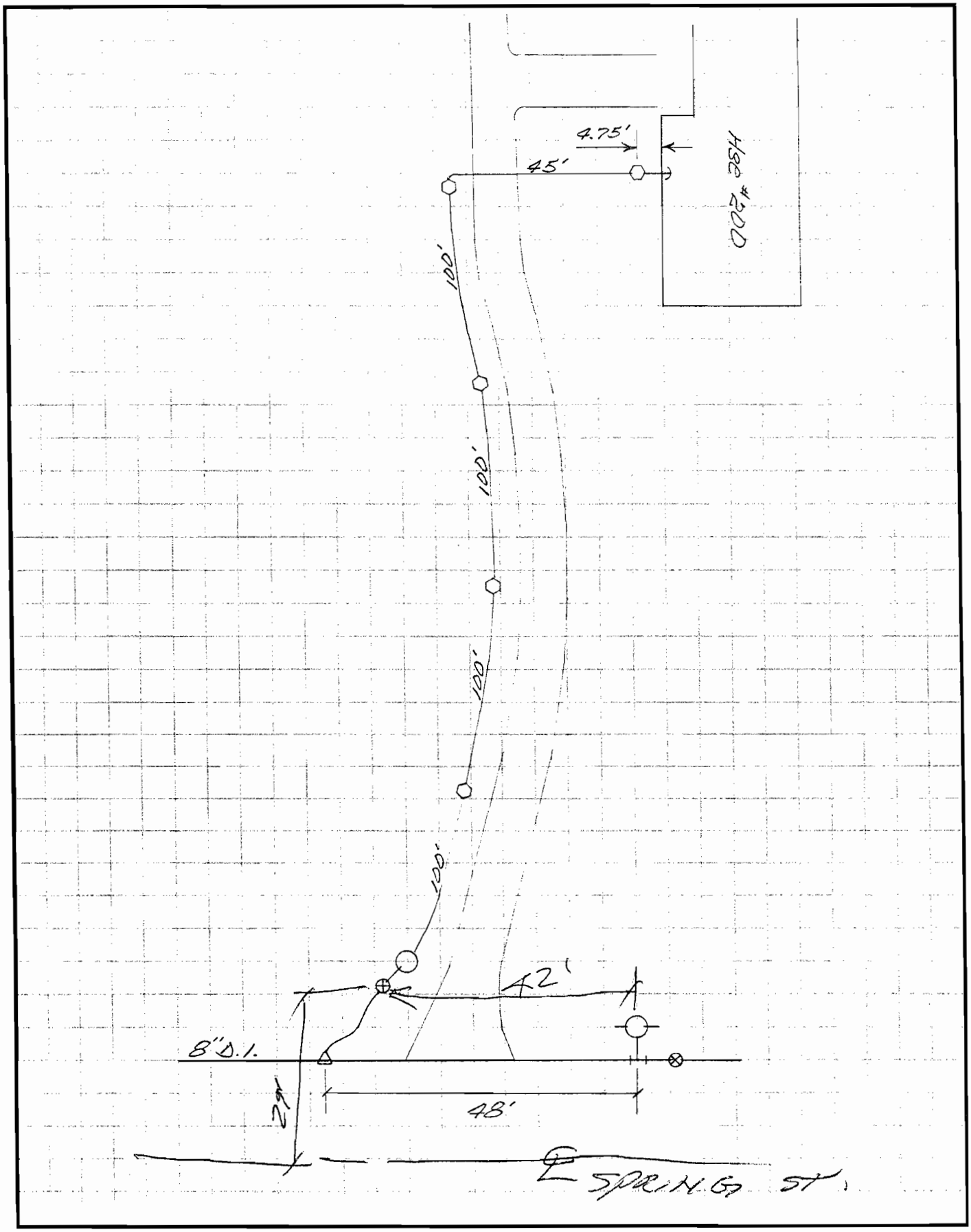

450

Sheet____ of____

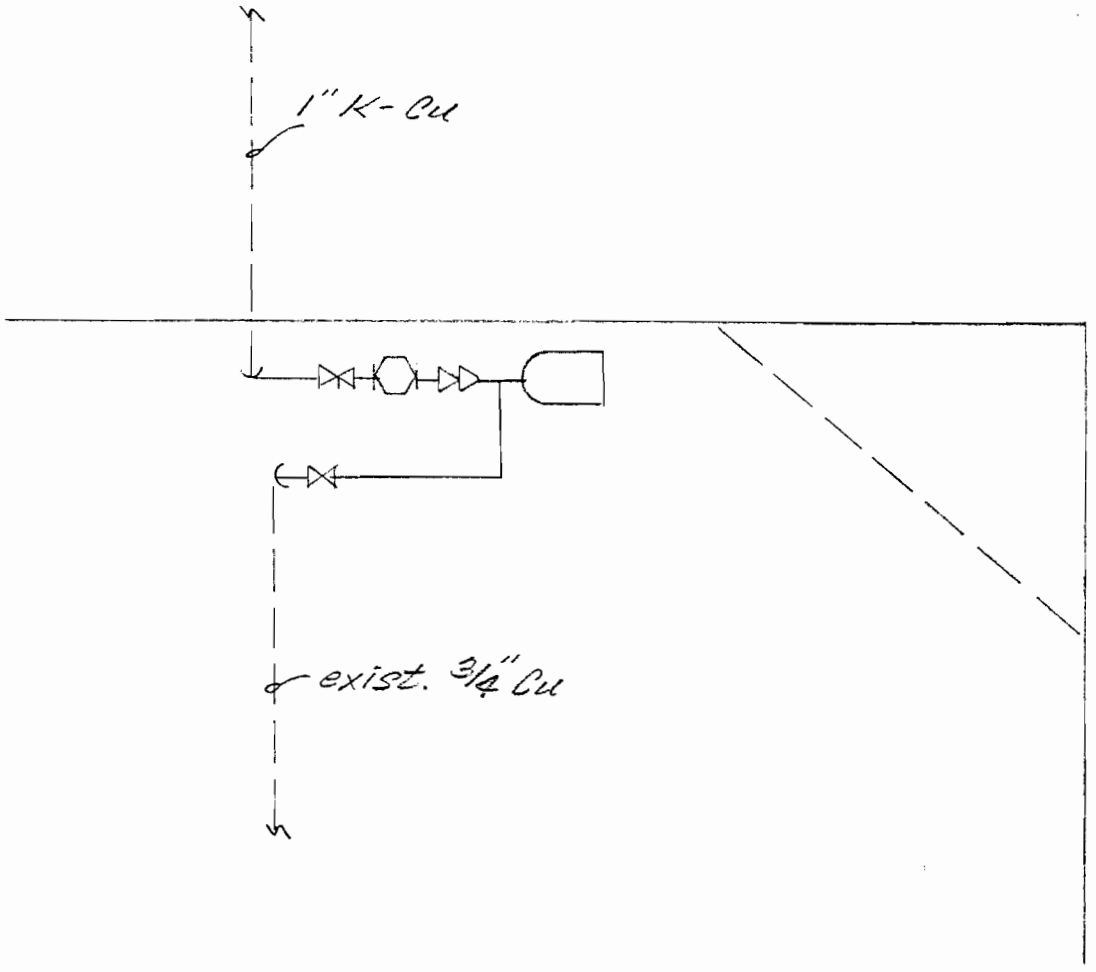
1" K-Cu
exist. 3/4" Cu

Stearns & Wheler, LLC
ENVIRONMENTAL ENGINEERS & SCIENTISTS

Hse #27 Spring St.
Subject

Date

Job No.

Comp. By

Checked By

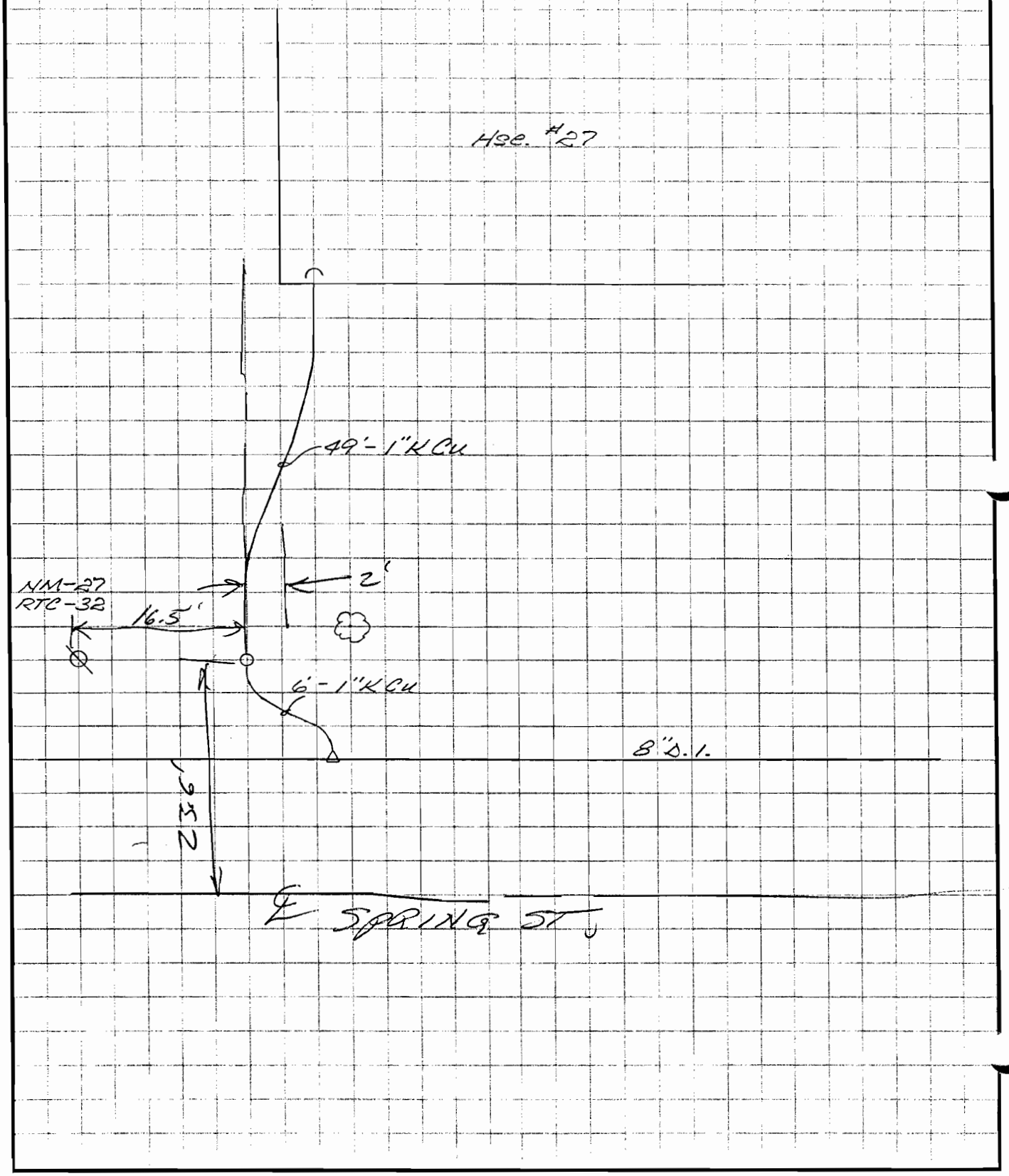

Sheet____ of____

BV
Meter
PRV
DCV
BV
Exp.
Tank
1.5'
7' up

Stearns & Wheler, LLC
ENVIRONMENTAL ENGINEERS & SCIENTISTS

Subject: 17 Spring Street

Date

Job No.

Comp. By

Checked By

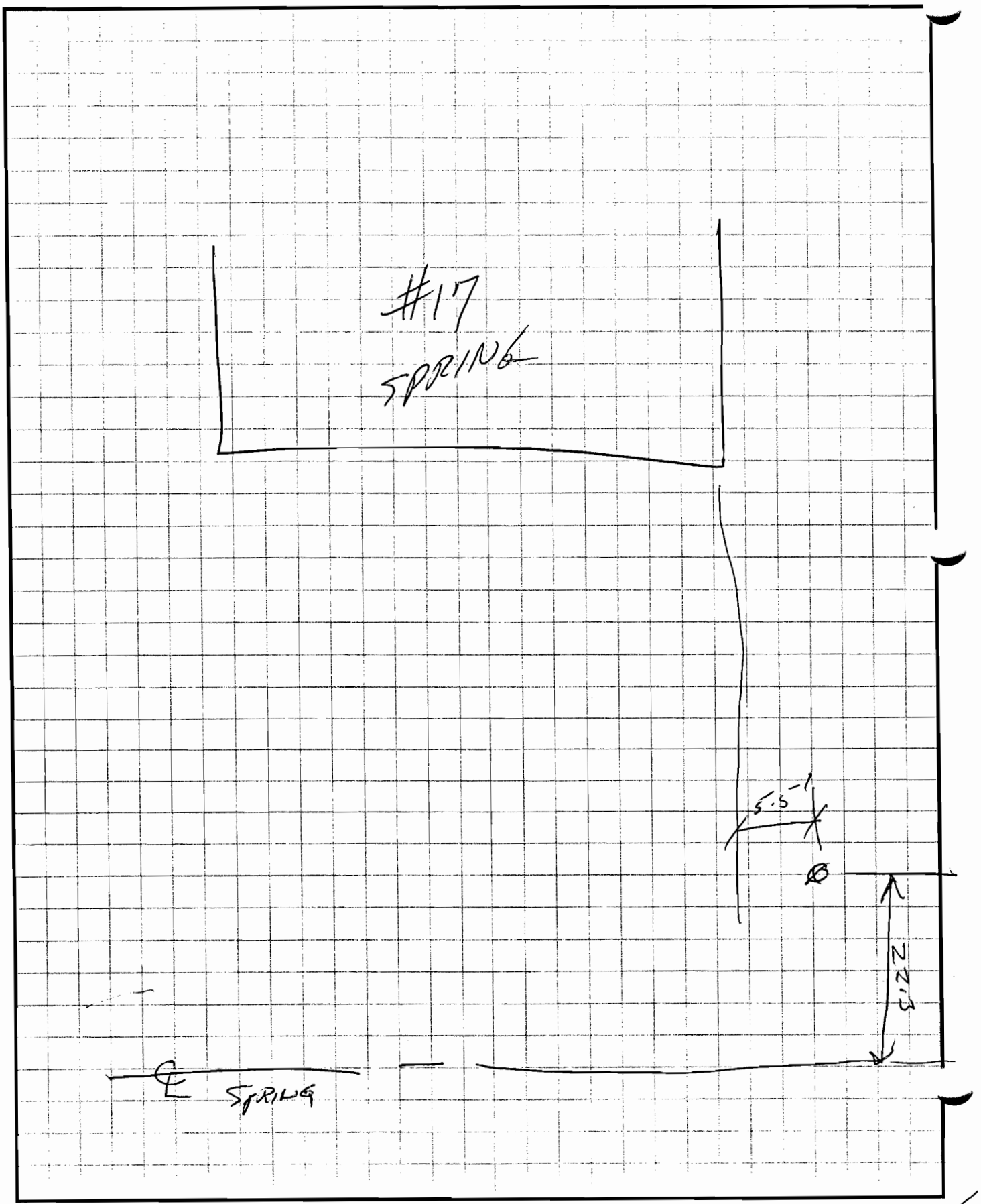

Sheet ____ of ____

Stearns & Wheler, LLC
ENVIRONMENTAL ENGINEERS & SCIENTISTS

Subject: RT. 5 #3R 2379

Date

Job No.

Comp. By

Checked By

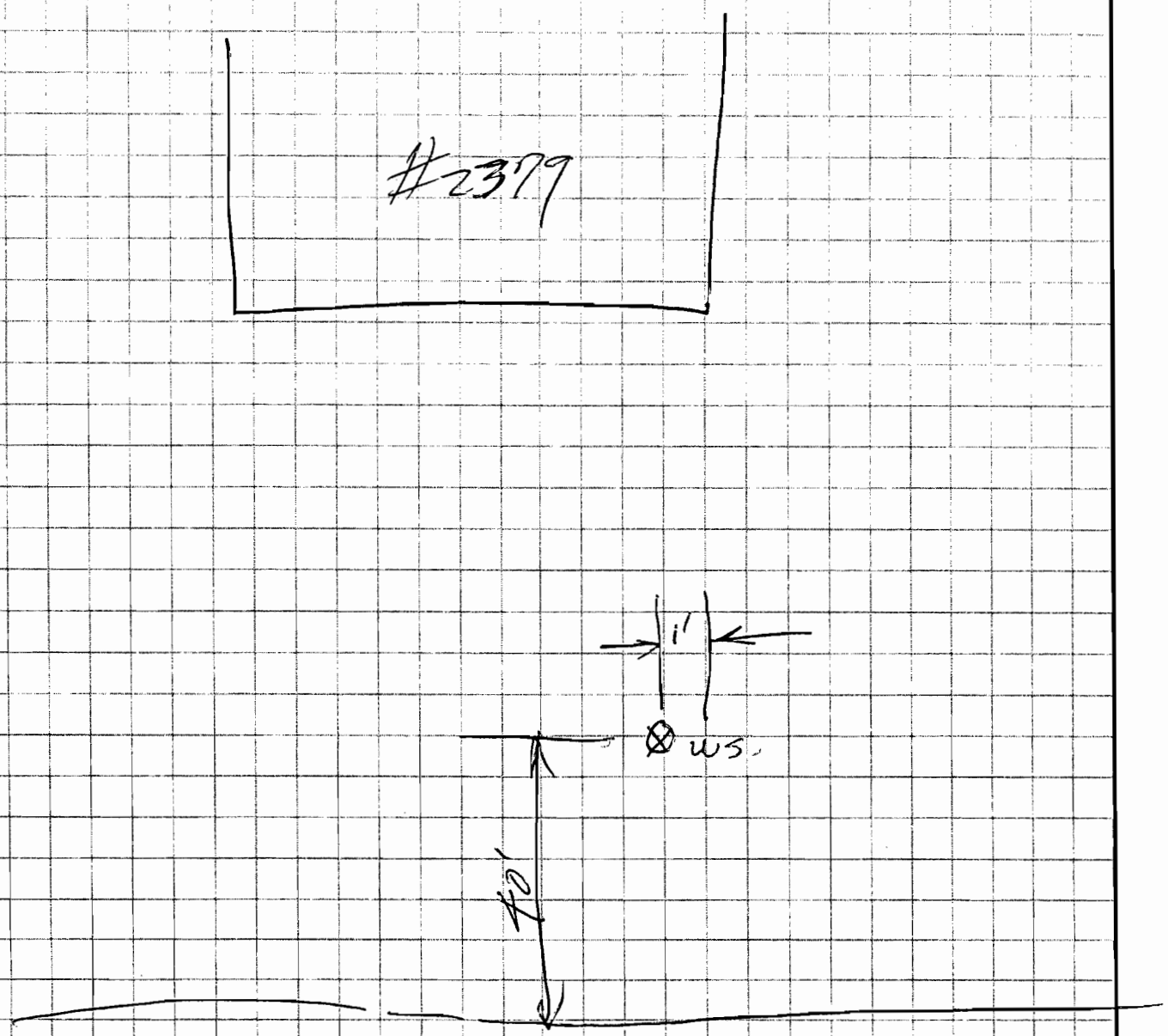

Sheet____ of____

Stearns & Wheler
Companies

Lehigh Valley RR Derailment Site
nt

Date

Job No.

NYS Route 5 - House # 2800
Subject

Mike Polek
Comp. By

Checked By

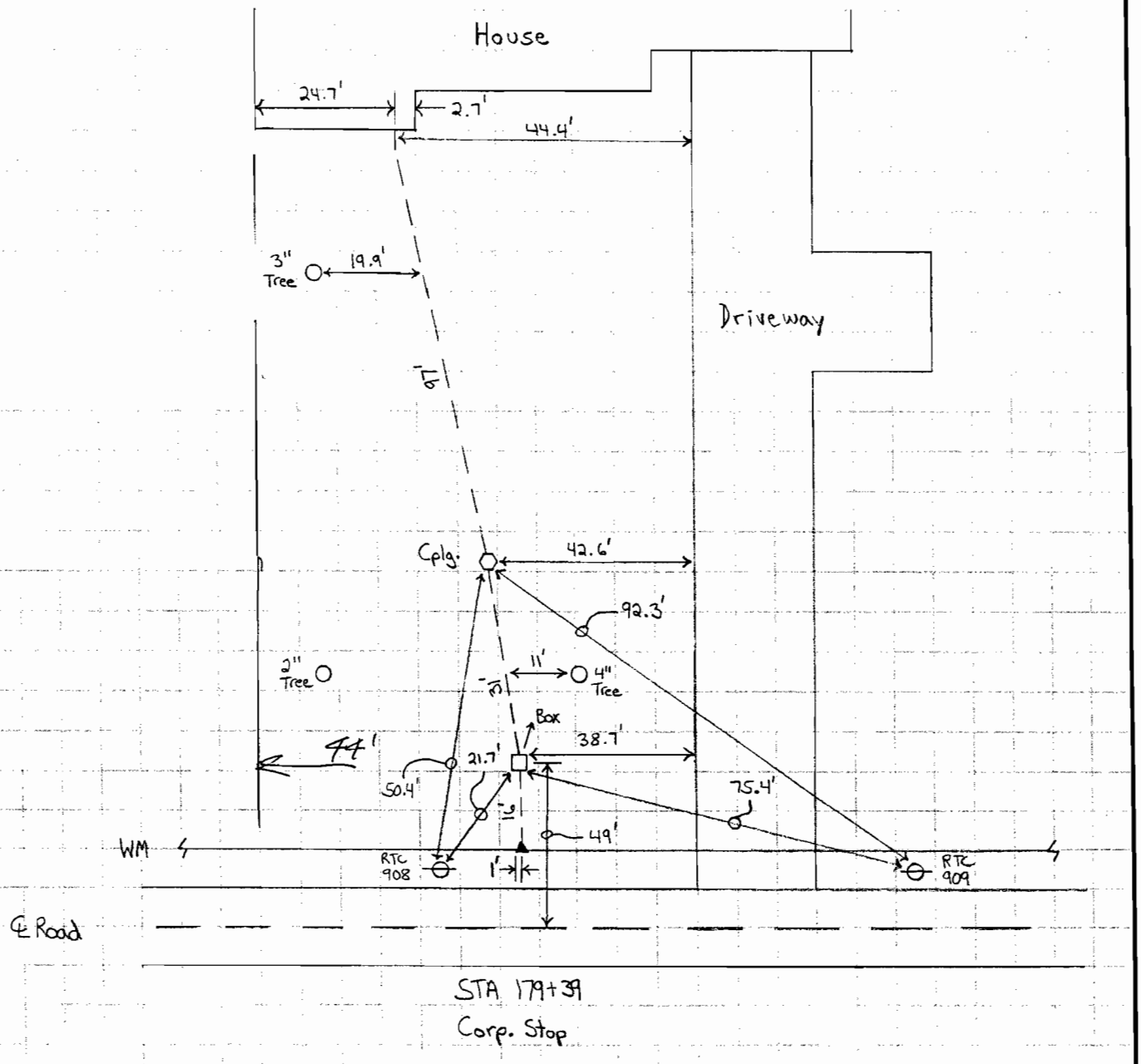

31
97
128

Sheet____ of____

Stearns & Wheler
Companies

Hse #2800 NYS-RTE. 5
nt

Date | Job No.

Subject

Comp. By | Checked By

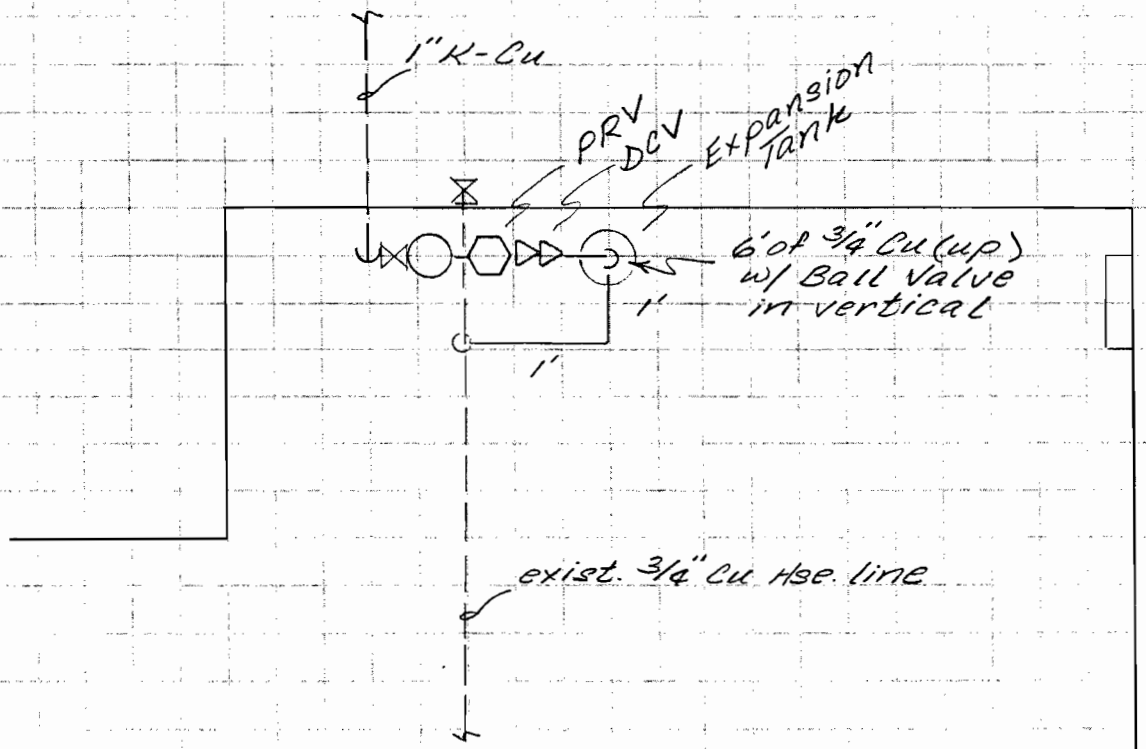

Note: removed the homeowner's water softener and related piping, additional re-plumbing of Hse. lines.

Stearns & Wheler, LLC
ENVIRONMENTAL ENGINEERS & SCIENTISTS

Hse #2387 NYS-RT. 5 — Subject

Date

Δ004327 — Job No.

Comp. By

Checked By

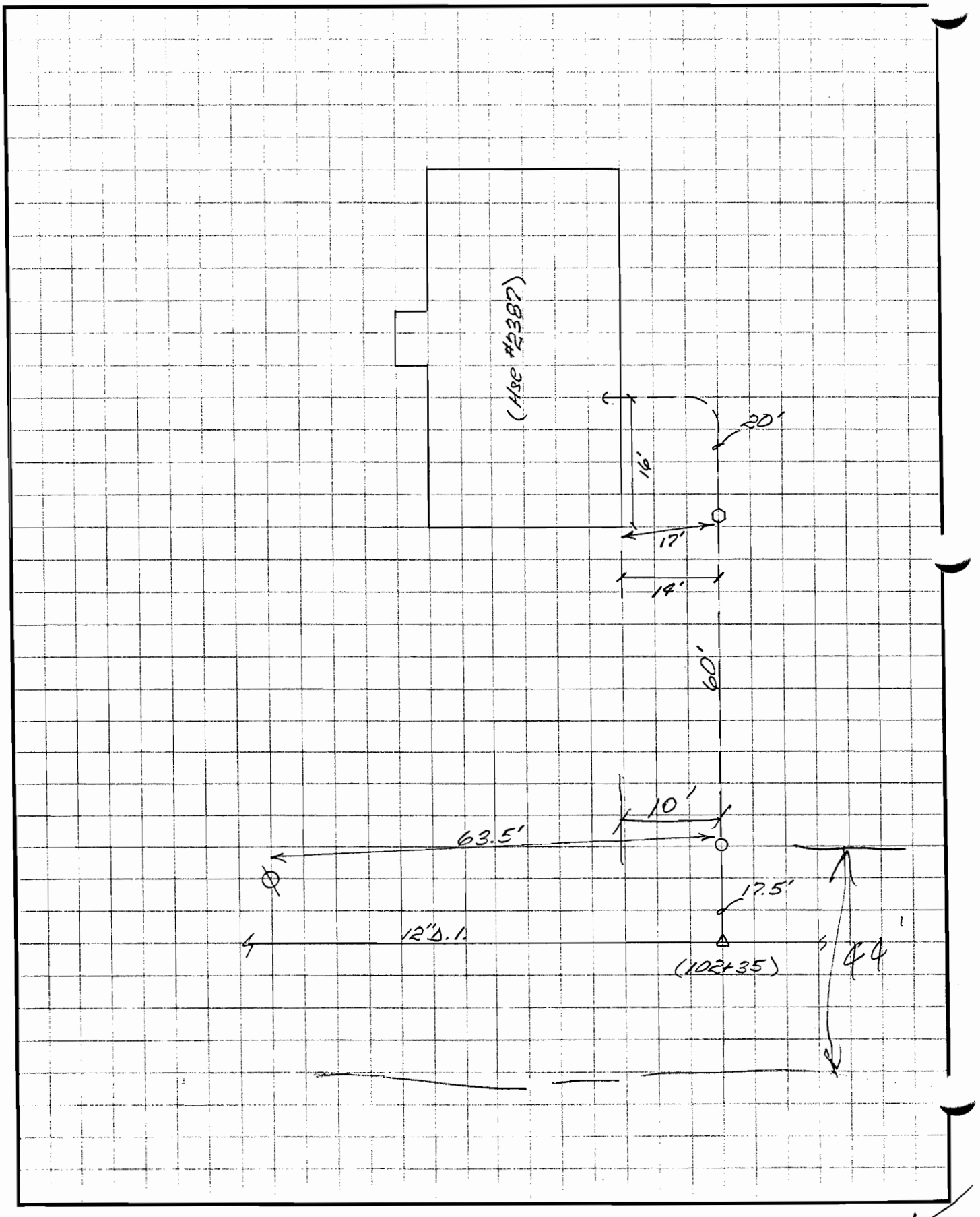

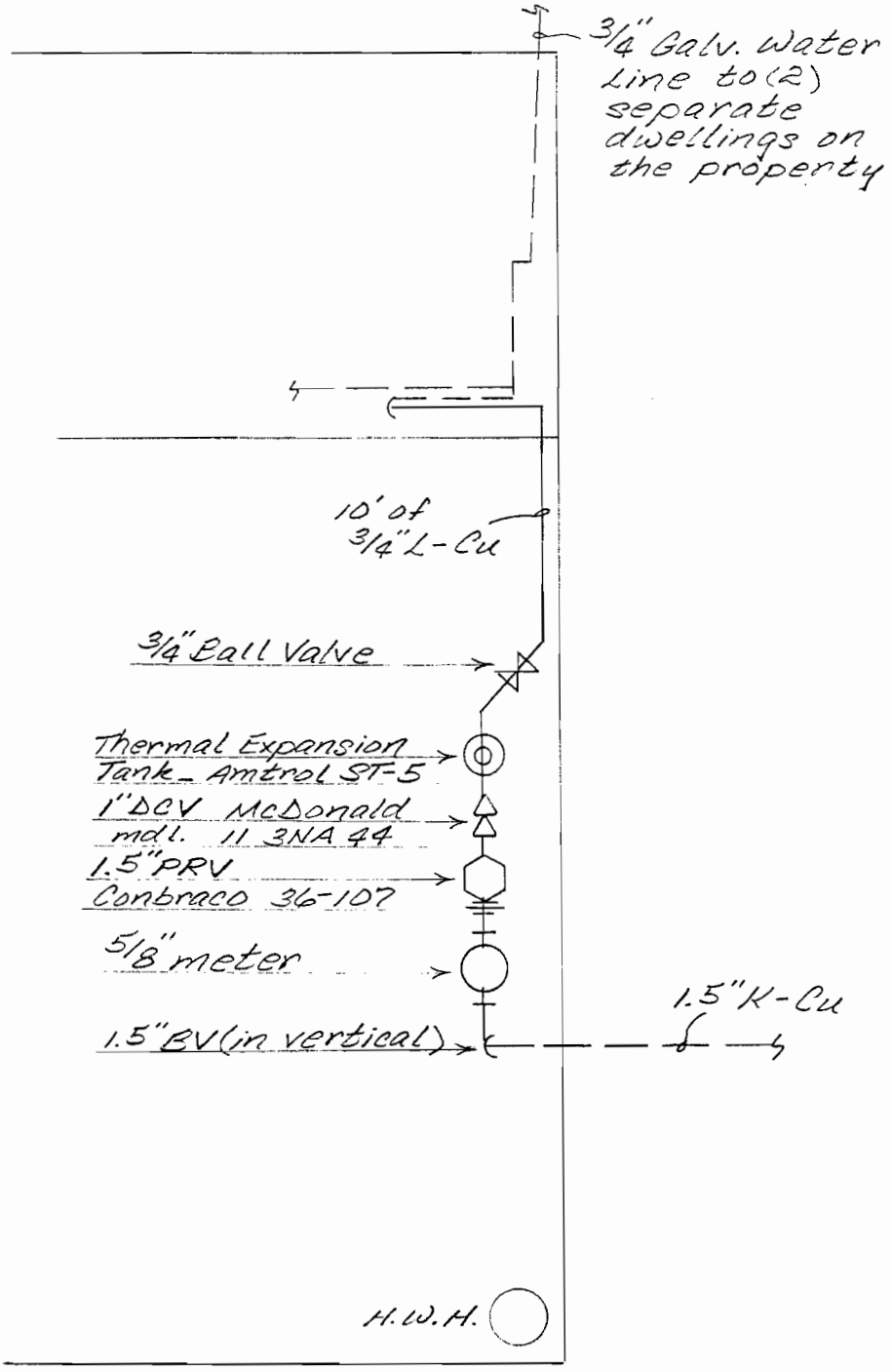

materials

(1) 1.5" 90° el, comp.
(1) 1.5" Ball Valve
(2) 1.5" x 3/4" Brass Bushings
(1) 1" close nipple
(1) 1" x 3/4" female adapter
(1) 3/4" tee
(2) 3/4" x 45° els
(2) 3/4" x 90° els

Stearns & Wheler
Companies

#1897 - #1899 Flint Hill Rd
nt

D004327
Date Job No.

(2) 1½" Cu Svces., in parallel
Subject

Comp. By Checked By

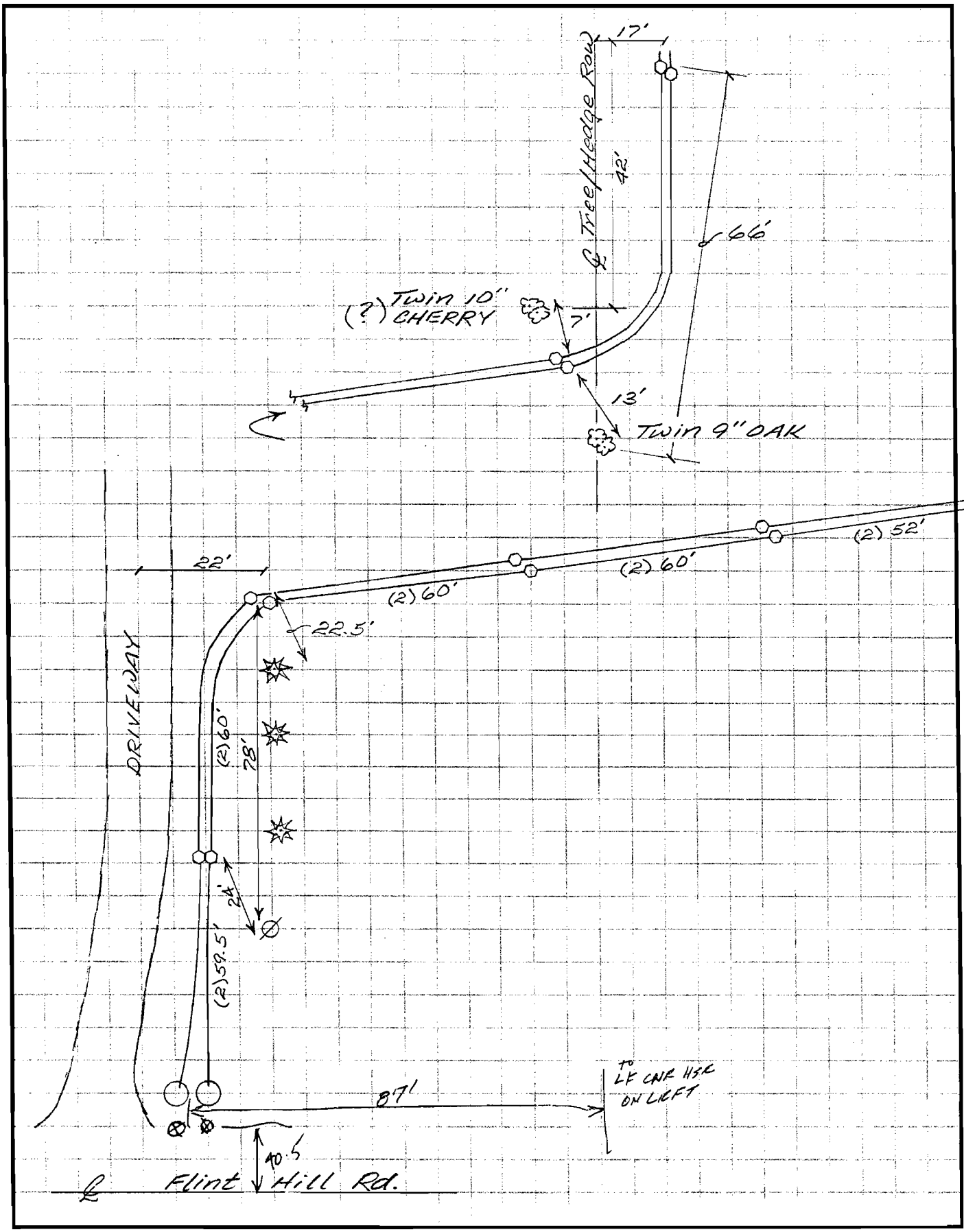

Sheet____ of____

Stearns & Wheler Companies

#1897-#1899 Flint Hill Rd.
nt

Date

D004327
Job No.

(2) 1½" Cu Svces, in parallel
Subject

Comp. By

Checked By

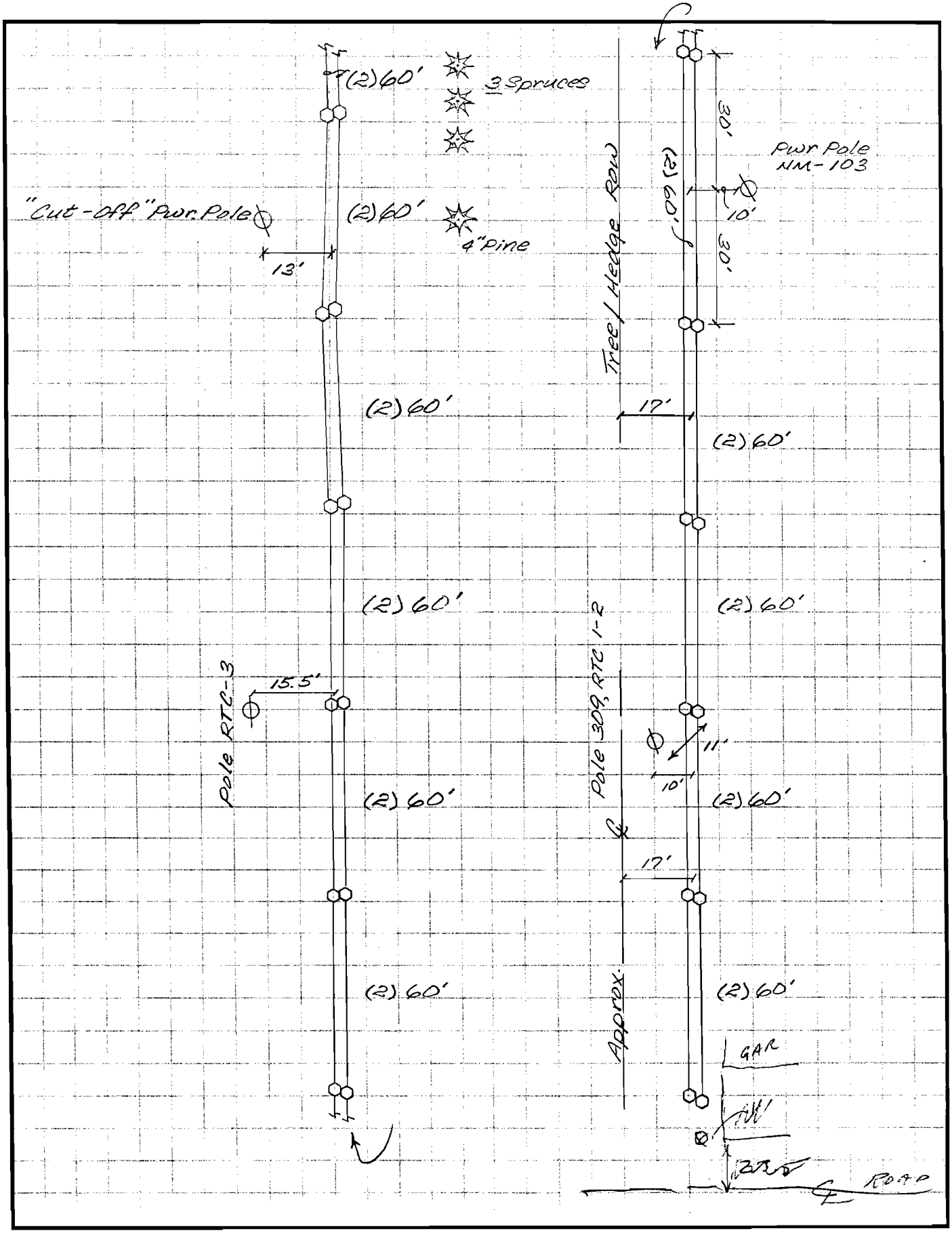

Sheet____ of____

Stearns & Wheler
Companies

#1897-#1899 Flint Hill Rd.
Client

D004327
Date / Job No.

(2) 1½" Cu Svces, in parallel
Subject

Comp. By / Checked By

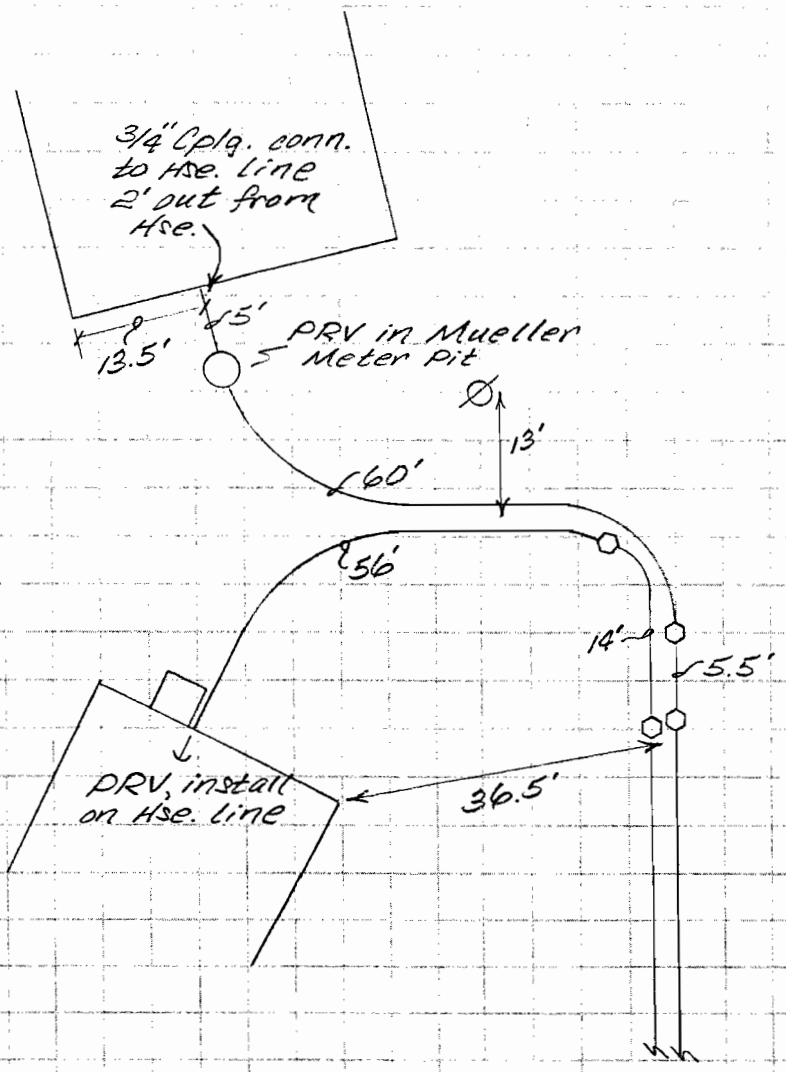

Sheet____ of____

Stearns & Wheler, LLC
ENVIRONMENTAL ENGINEERS & SCIENTISTS

Lehigh Valley RR Derailment Site	7-1-02	D004327
Subject	Date	Job No.
House 1877 - Flint Hill Road	Mike Blick	
	Comp. By	Checked By

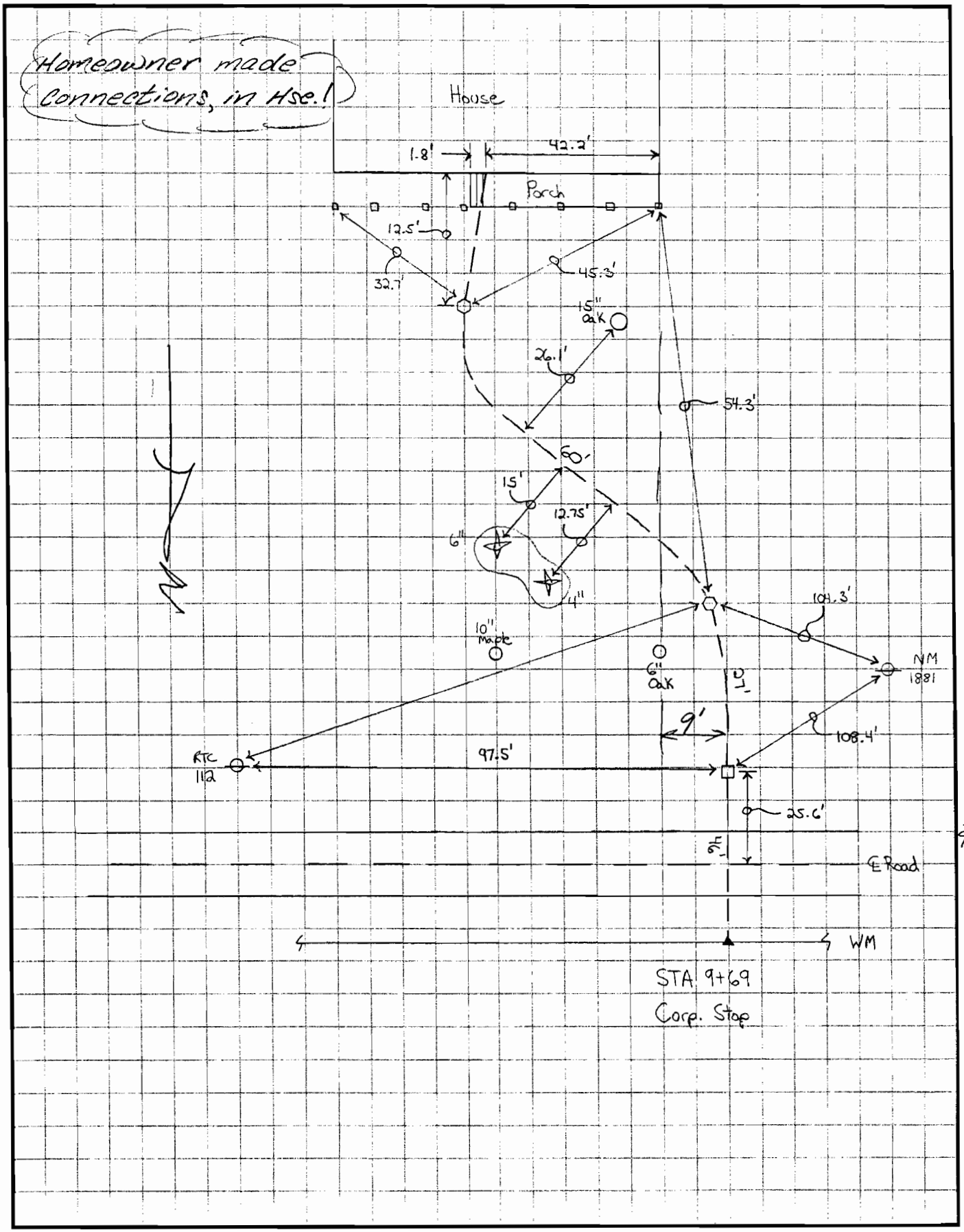

27
60
12.5
99.5

Sheet____ of____

Stearns & Wheler Companies

Lehigh Valley RR Derailment Site		10-15-02	000432
nt		Date	Job No.
House # 1853 - Flint Hill Road		Mike Polek	
Subject		Comp. By	Checked By

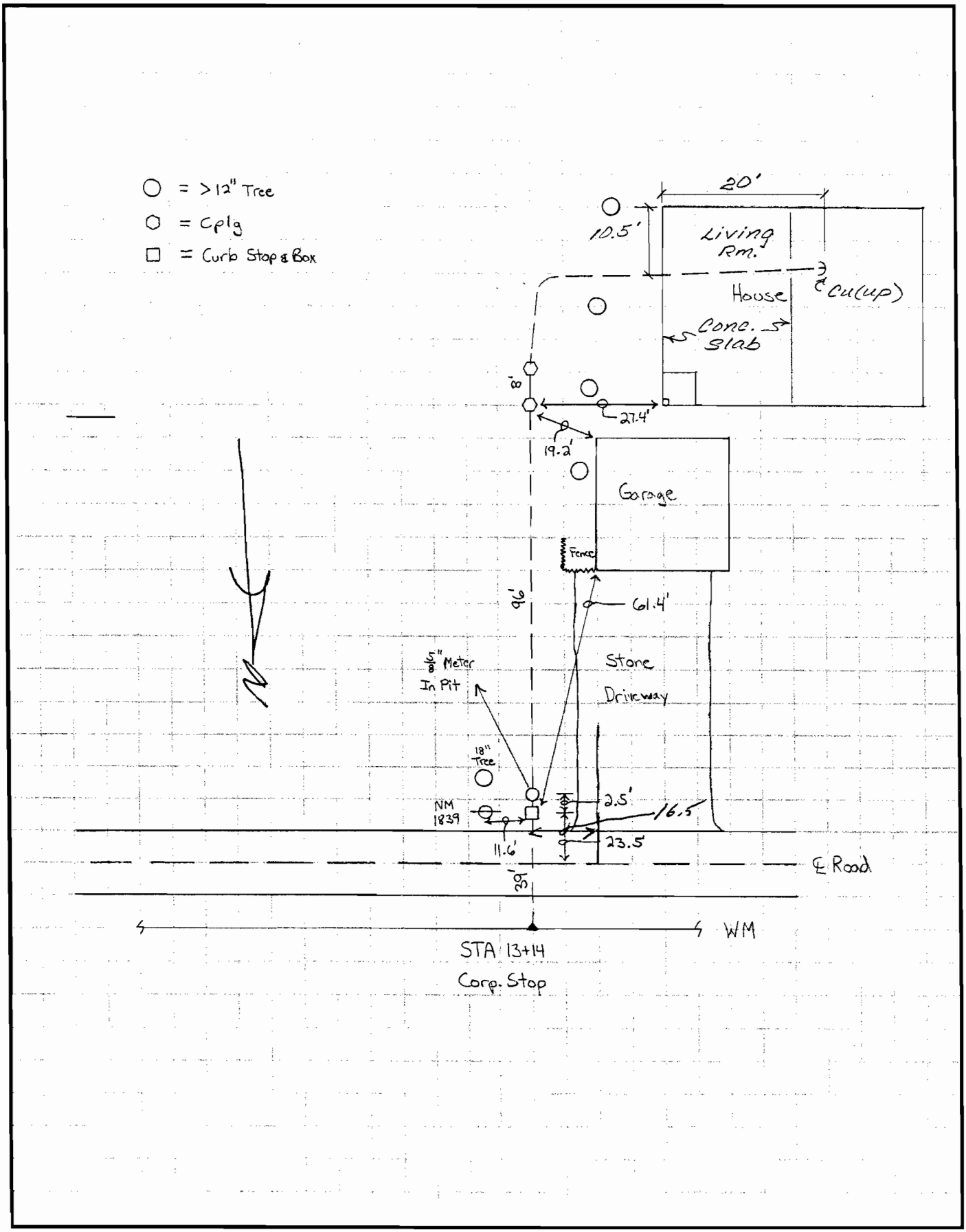

Sheet____ of____

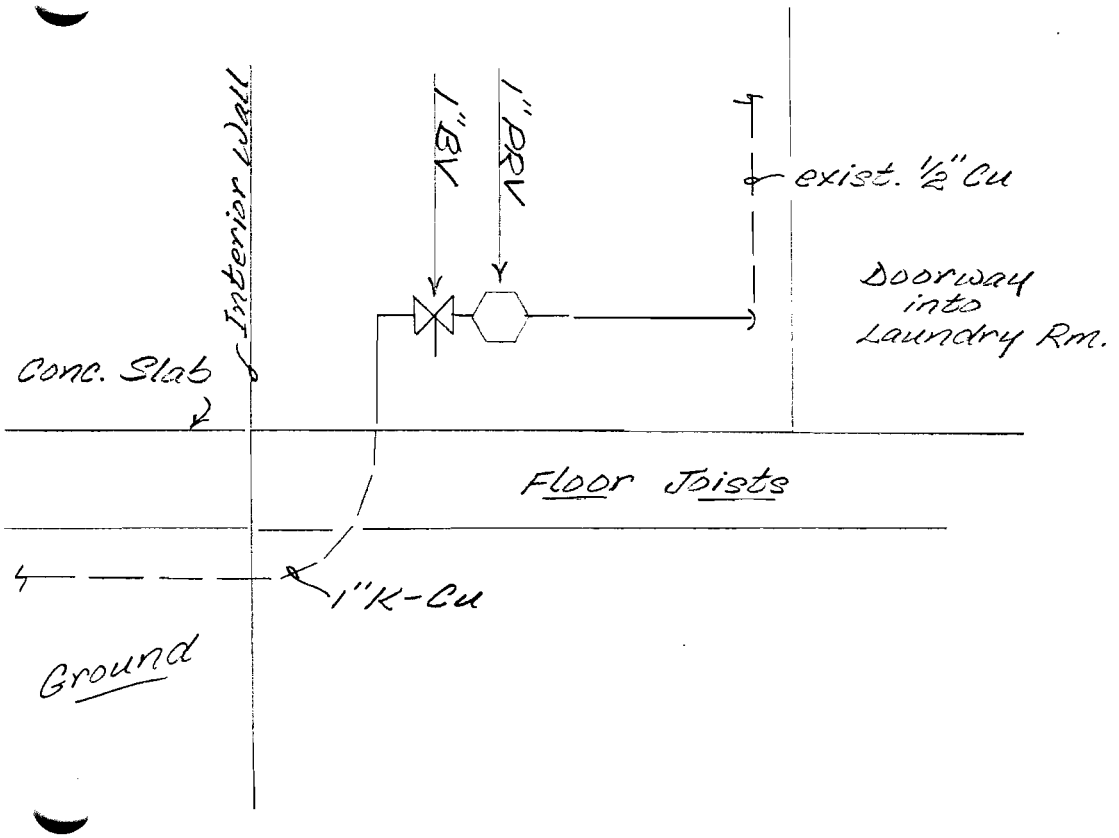
Interior Wall
18"
18"
exist. ½" Cu
Doorway into Laundry Rm.
Conc. Slab
Floor Joists
1" K-Cu
Ground

Stearns & Wheler Companies

Lehigh Valley RR. Derailment Site
nt

House # 1845 - Flint Hill Road
Subject

Date | Job No.

Mike Polek
Comp. By | Checked By

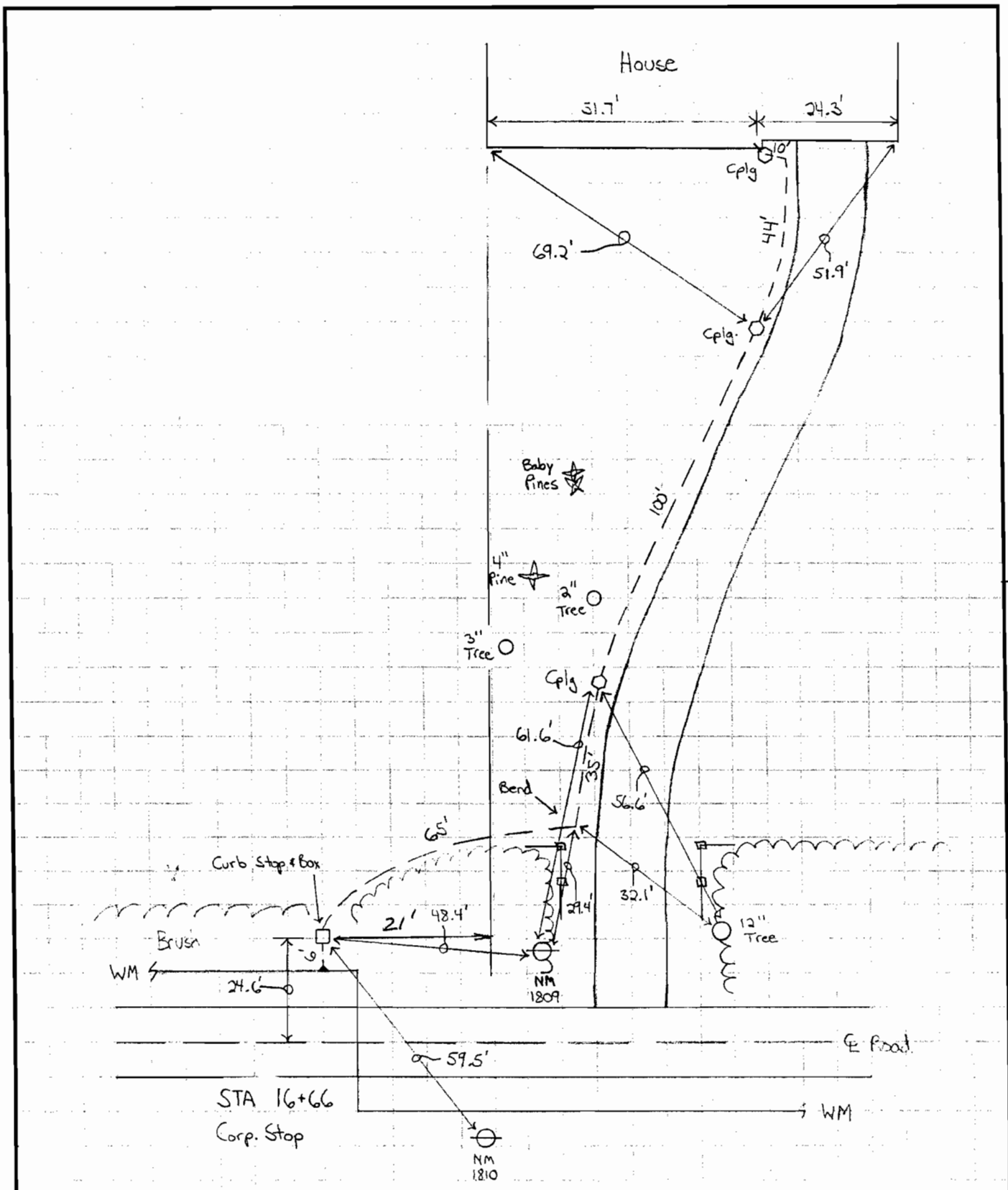

44
100
35
65
2

Sheet____ of____

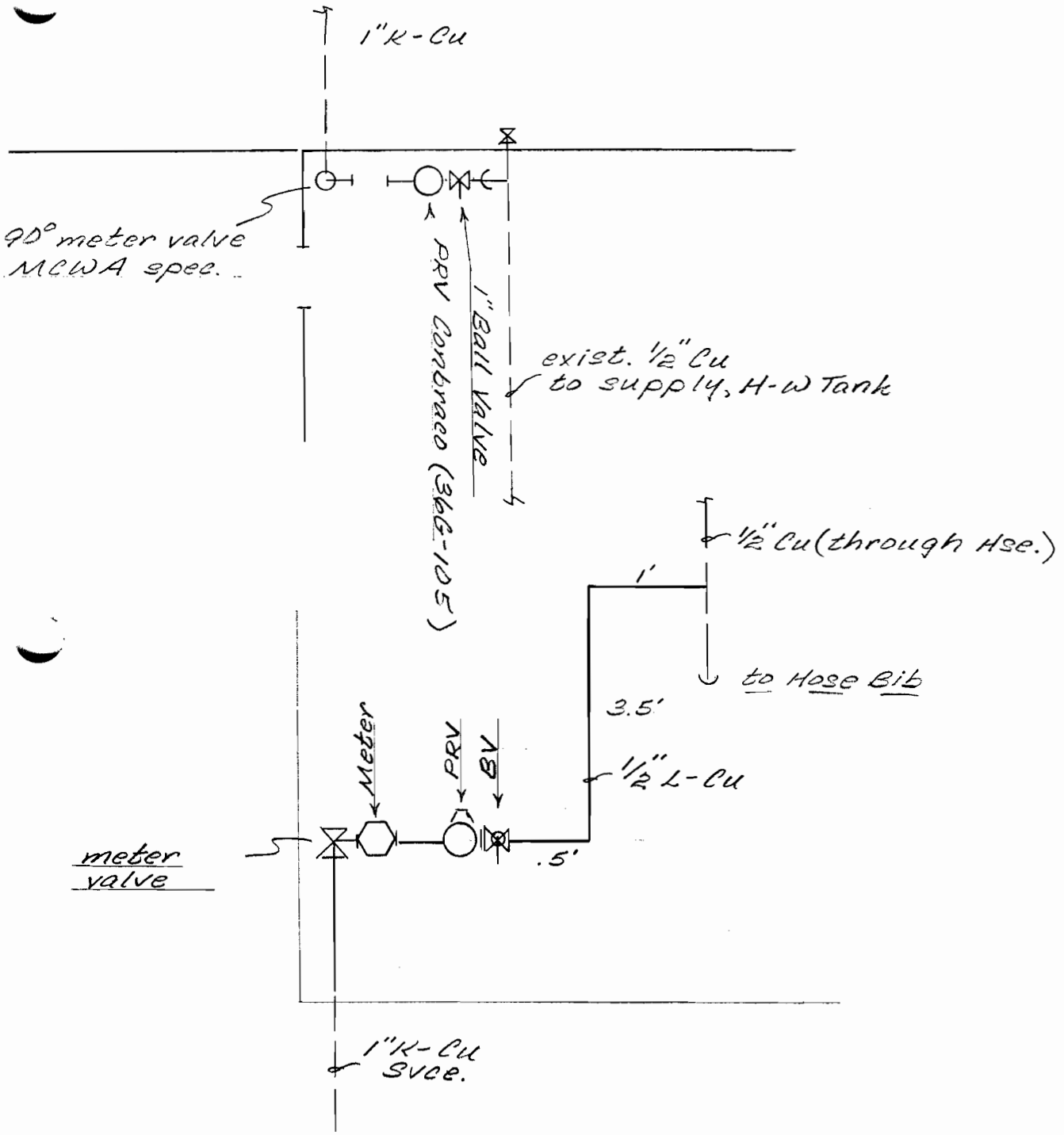
1"K-Cu
90° meter valve
MCWA spec.
PRV Conbraco (36G-105)
1" Ball Valve
exist. 1/2" Cu
to supply, H-W Tank
1/2" Cu (through Hse.)
1'
to Hose Bib
3.5'
1/2" L-Cu
Meter
PRV
BV
meter
valve
.5'
1"K-Cu
Svce.

Stearns & Wheler Companies

Hse. #1810 Flint Hill Rd.
nt

Date

D004327
Job No.

Subject

Comp. By

Checked By

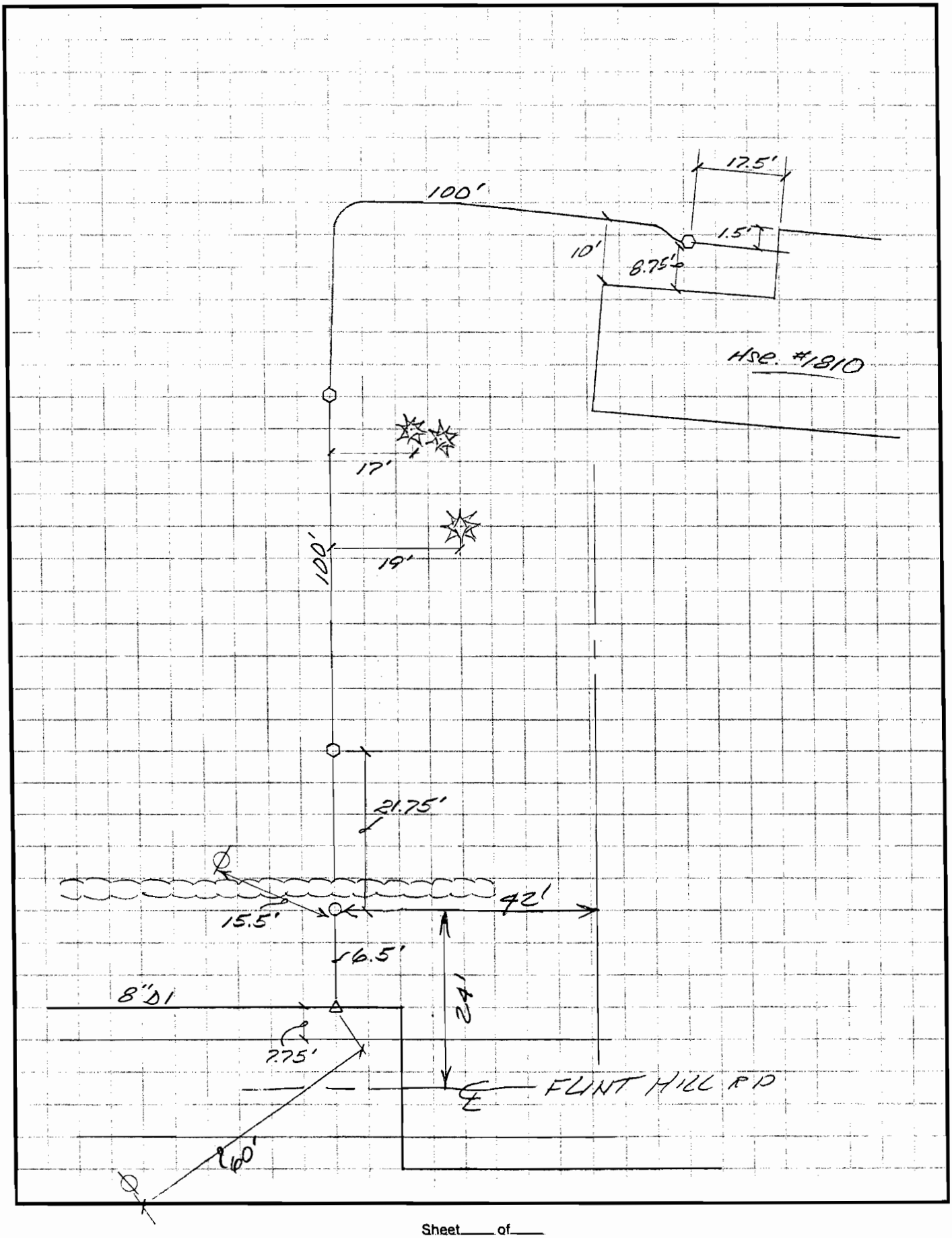

Sheet ____ of ____

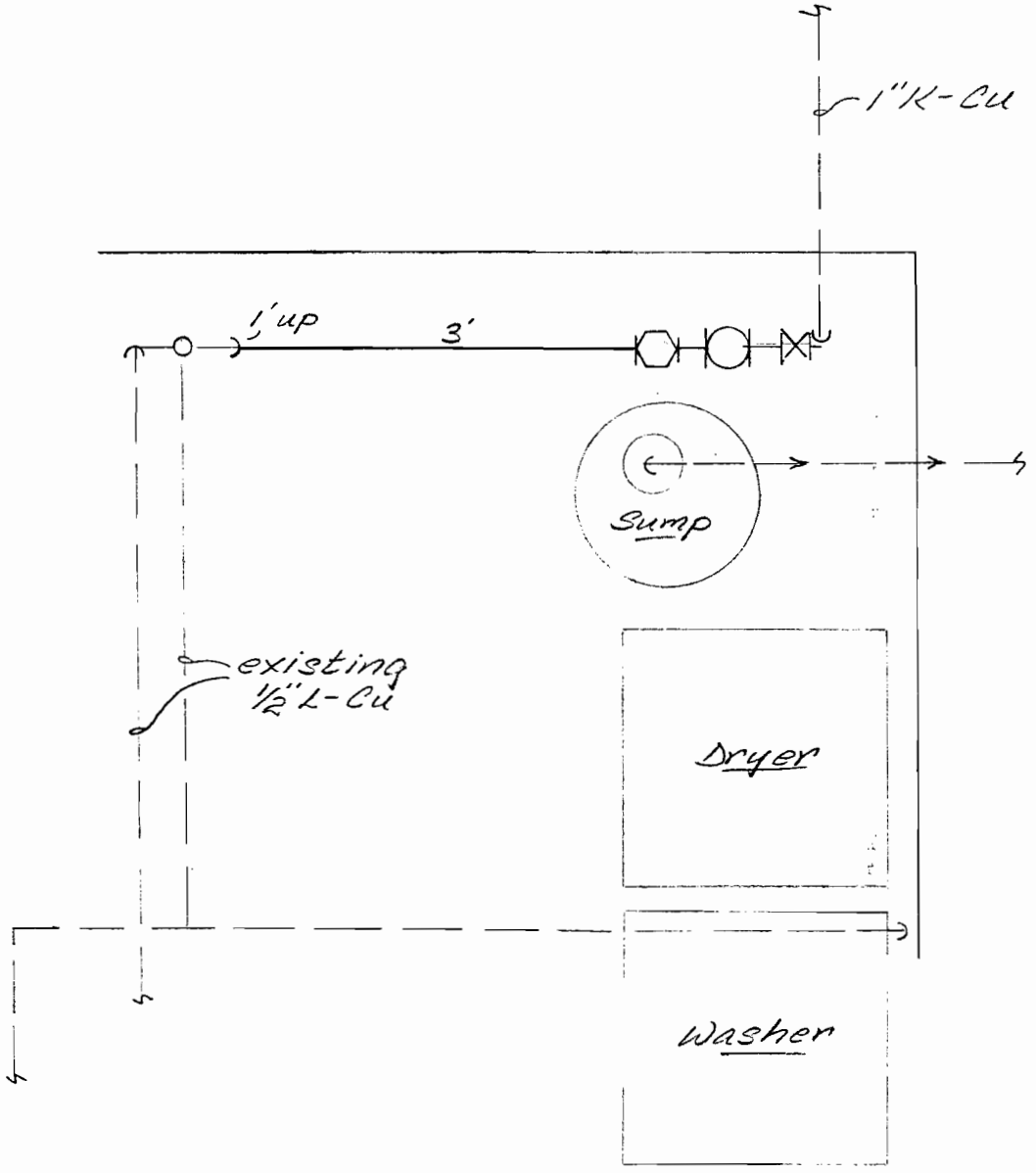
1" K-Cu
1' up
3'
Sump
existing
½" L-Cu
Dryer
Washer

Stearns & Wheler
Companies

Lehigh Valley RR Derailment Site
at
Flint Hill Road — House # 1809
Subject

10-24-02
Date

Job No.

Mike Polek
Comp. By

Checked By

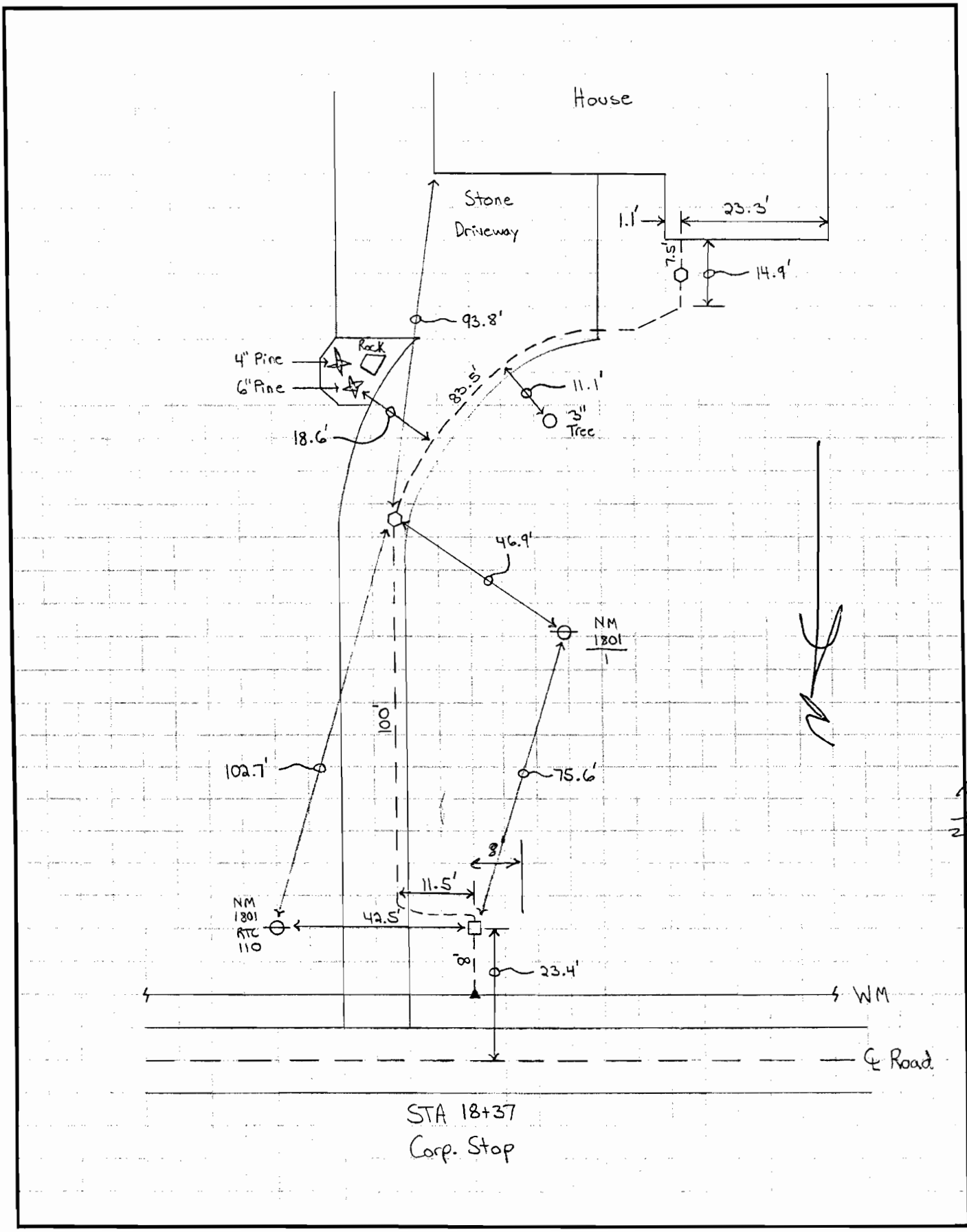

7.5
83.5
11.5
202.5

Sheet____ of____

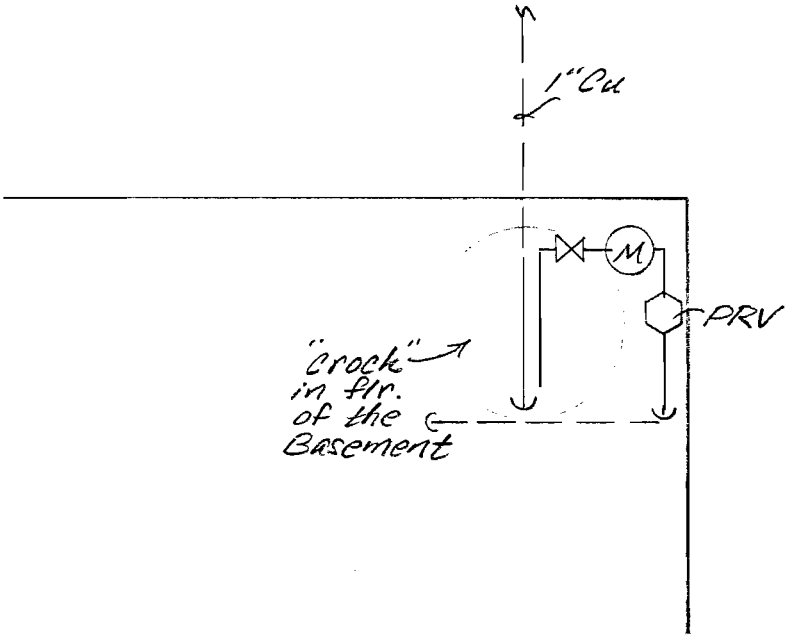
1" Cu
M
PRV
"crack" in flr. of the Basement

Stearns & Wheler
Companies

Hse. #1703 Flint Hill Rd.
nt

D004327
Date Job No.

1½" Cu Svce.
Subject

Comp. By Checked By

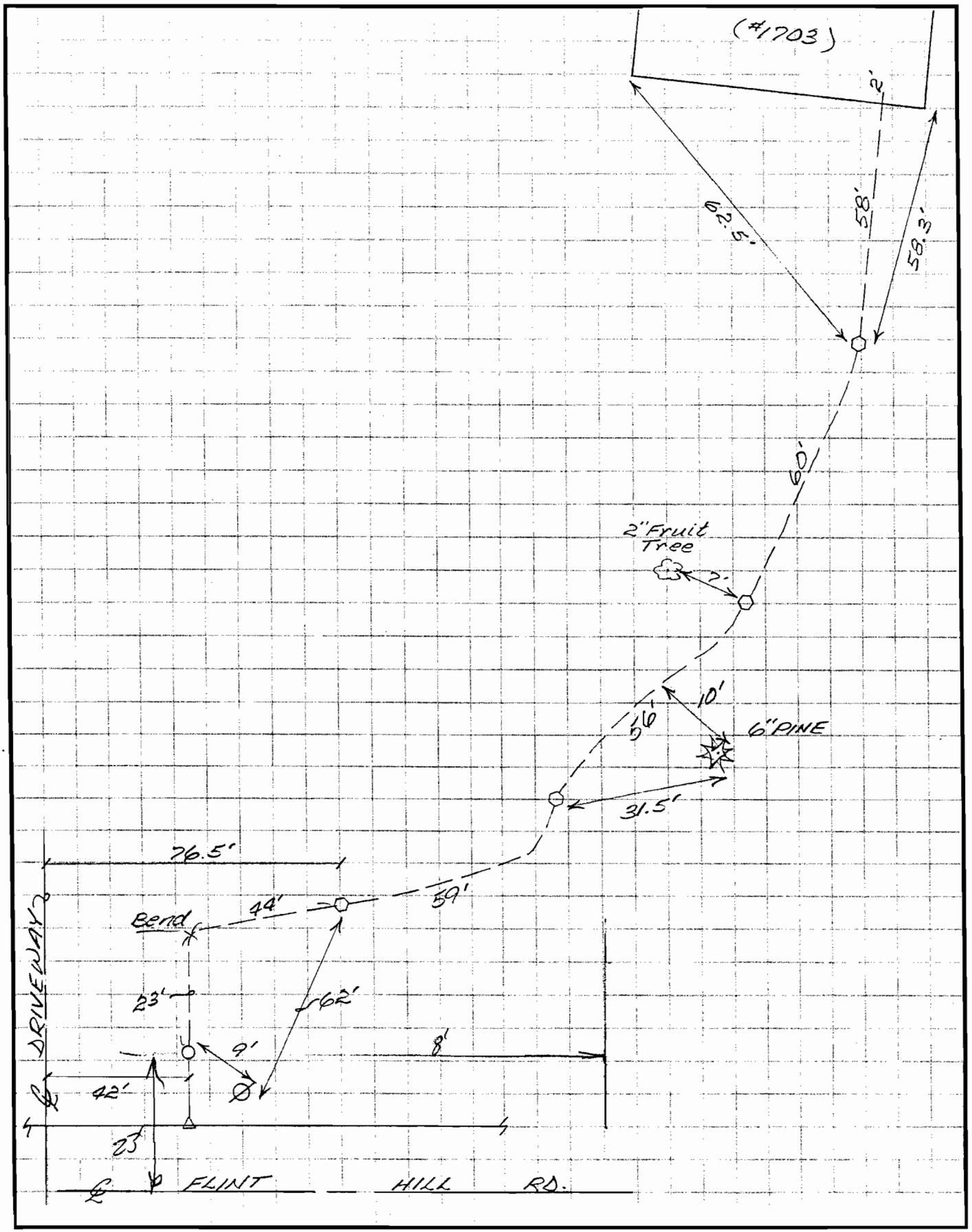

50
60
56
59
44
23

Sheet____ of____

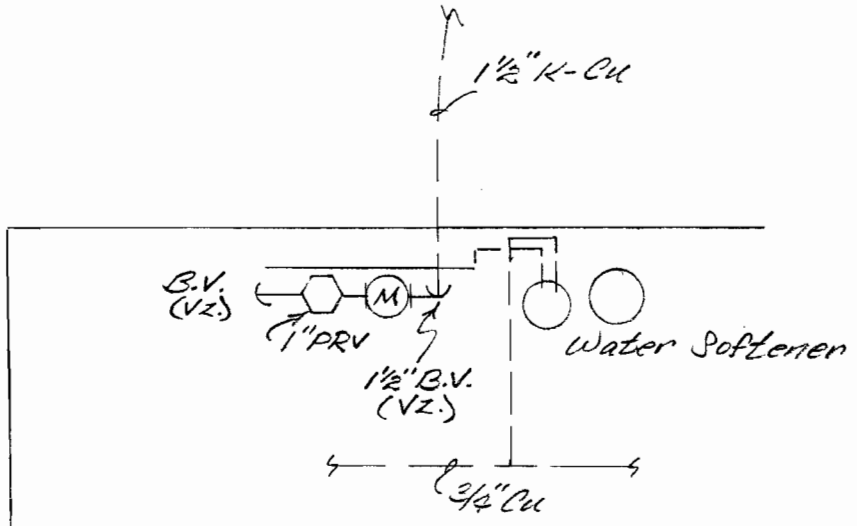
1½" K-Cu
B.V. (VZ.)
M
1" PRV
1½" B.V. (VZ.)
Water Softener
¾" Cu

Stearns & Wheler
Companies

Lehigh Valley MA Enrollment Site
nt

Flint Hill Road - Pioneer Beagle Club
Subject

10 6-02
Date

Job No.

Mike Polek
Comp. By

Checked By

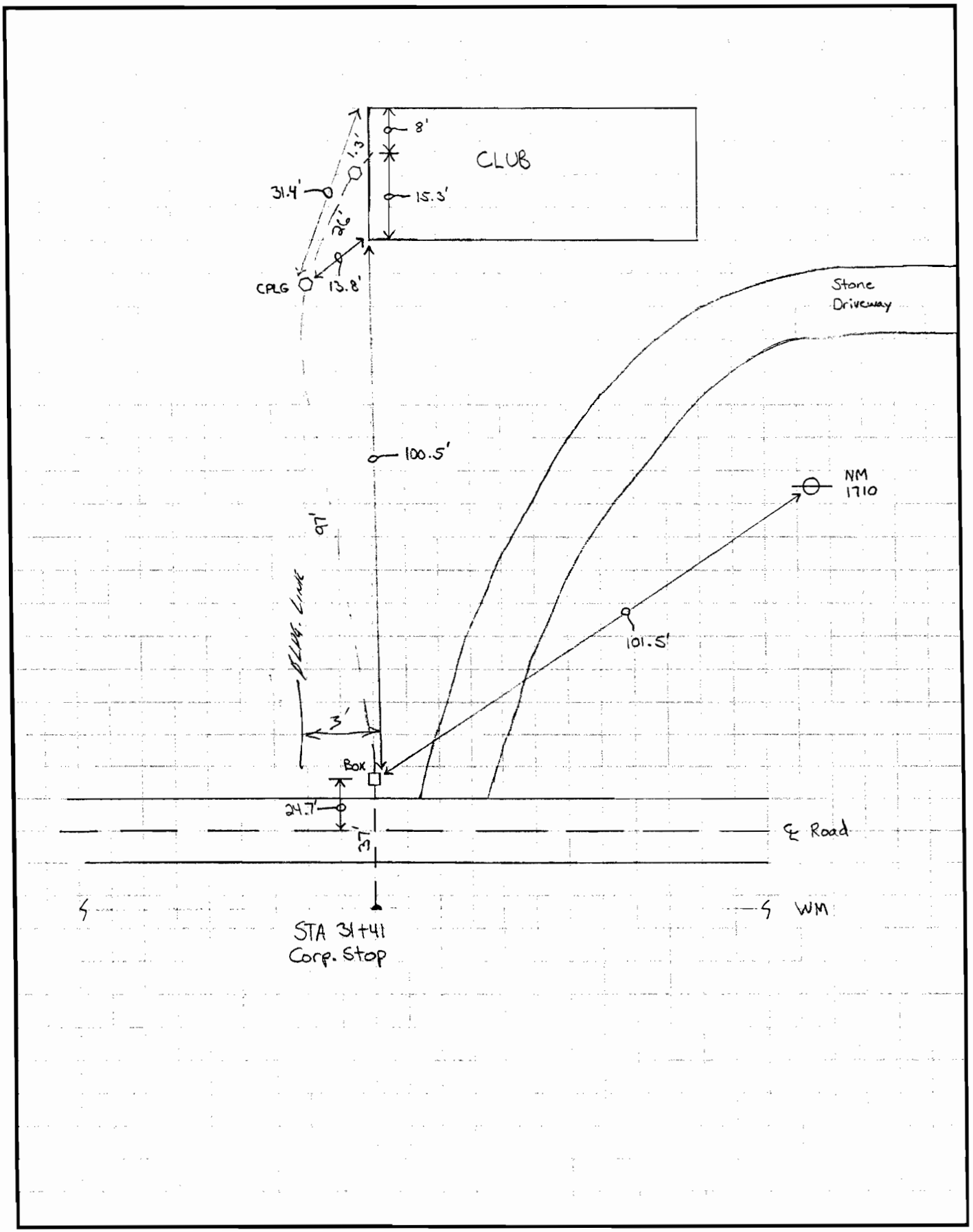

97
27
124

Sheet____ of____

PRV- Conbraco, mdl. 36C-105

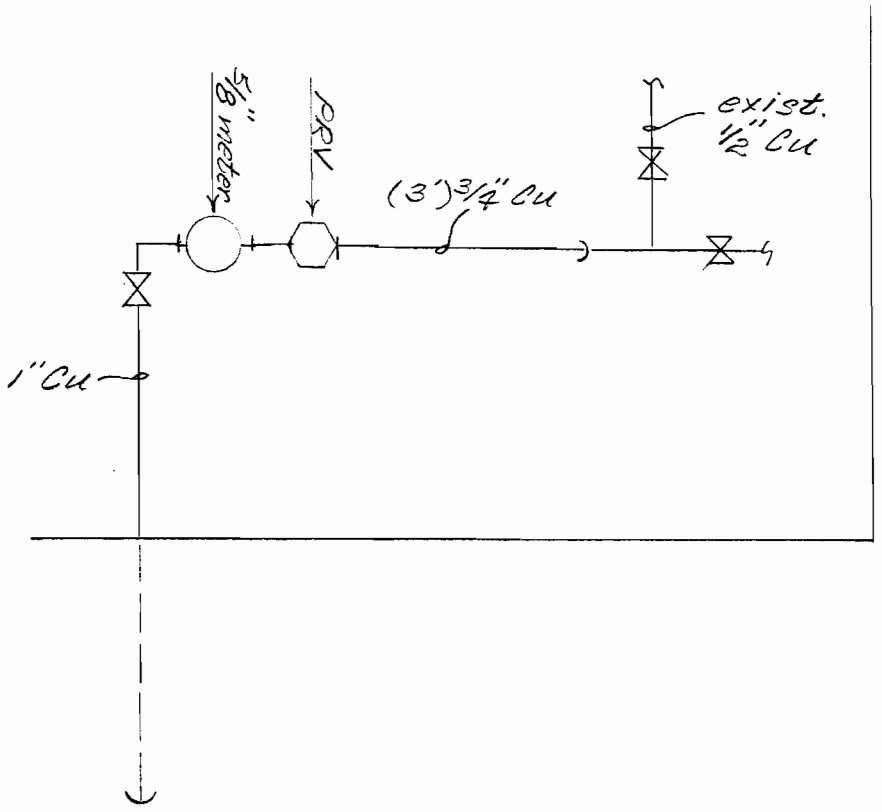

Stearns & Wheler
Companies

Lenigh Valley RR. Derailment Site
nt
Subject

Date

Job No.

Mike Polek
Comp. By

Checked By

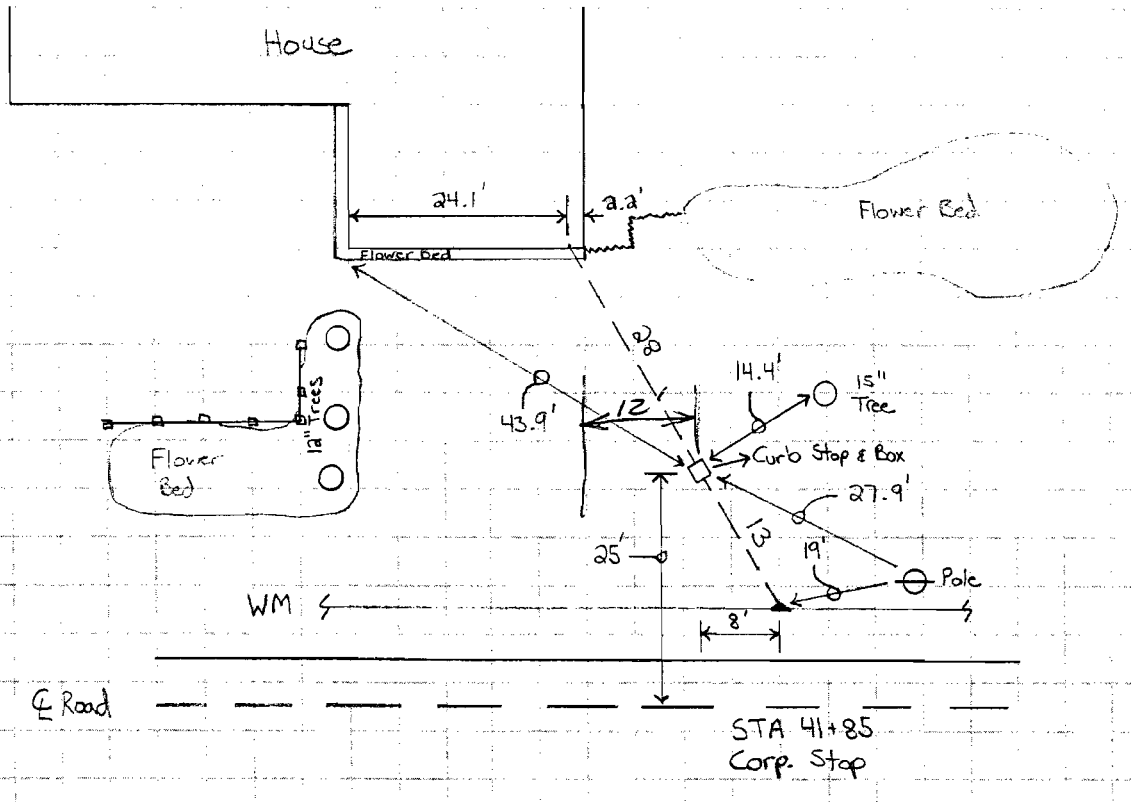

WS_ exist water softener, removed.

materials

23 L.F. of type-L Cu
(2) 3/4" Tees
(4) 90° 3/4 els
(2) 45° 3/4 els
(1) 3/4" Ball Valve

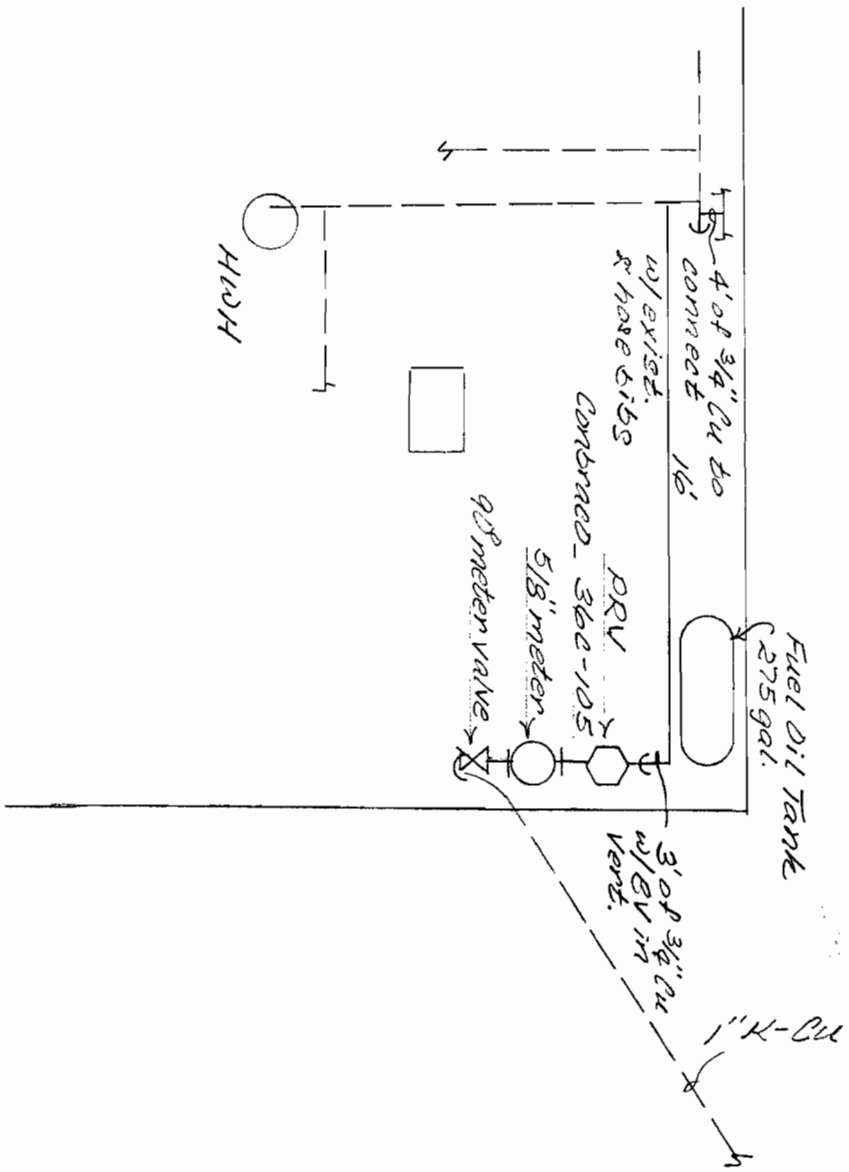

Stearns & Wheler, LLC
ENVIRONMENTAL ENGINEERS & SCIENTISTS

Lehigh Valley RR Derailment Site
Subject
Limerock Road - House #45

7-10-02
Date
Job No.
Mike Polek
Comp. By
Checked By

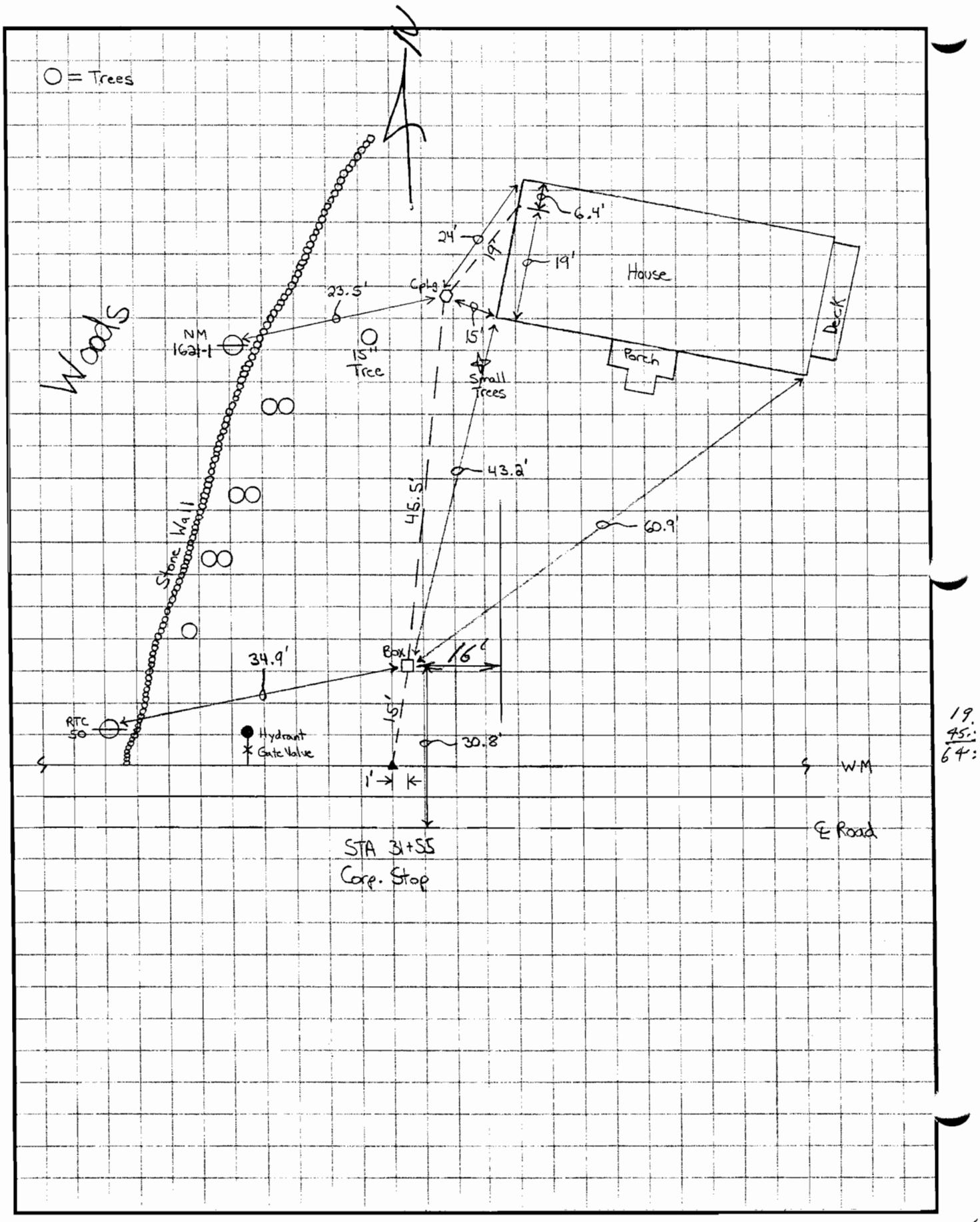

19.
45.
64:

Sheet____ of____

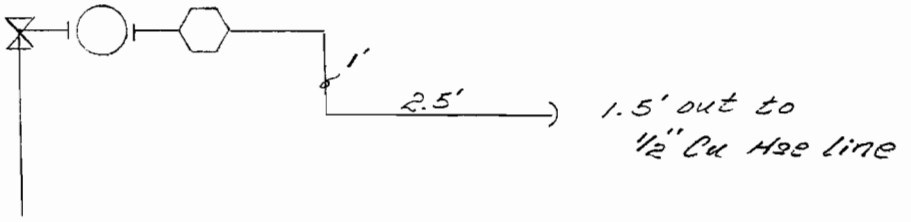
1'
2.5'
1.5' out to
1/2" Cu Hose line

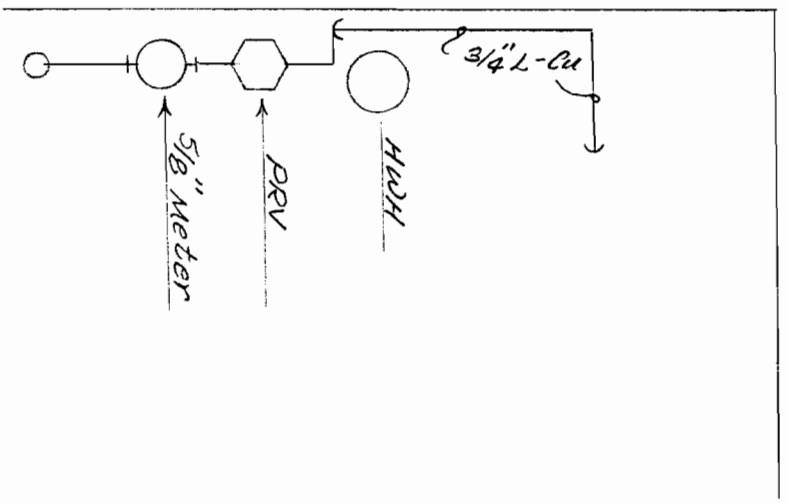
3/4" L-Cu
5/8" Meter
PRV
HUH

Stearns & Wheler, LLC
ENVIRONMENTAL ENGINEERS & SCIENTISTS

Subject: Lehigh Valley RR Derailment Site	Date: 9-19-02	Job No.: D004327
Comp. By: Mike Polek	Checked By:	

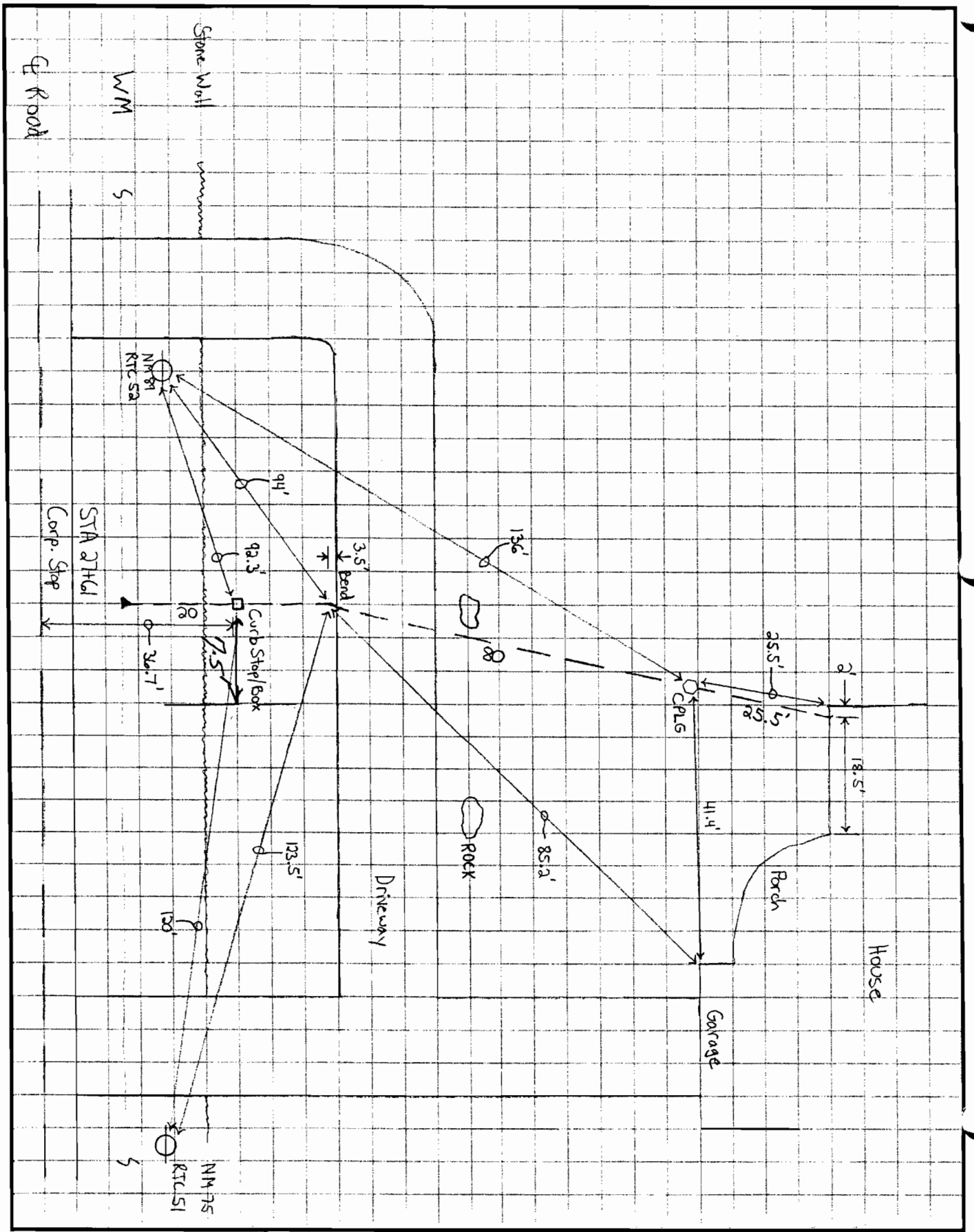

25.5
80.0
105.5

Sheet____ of____

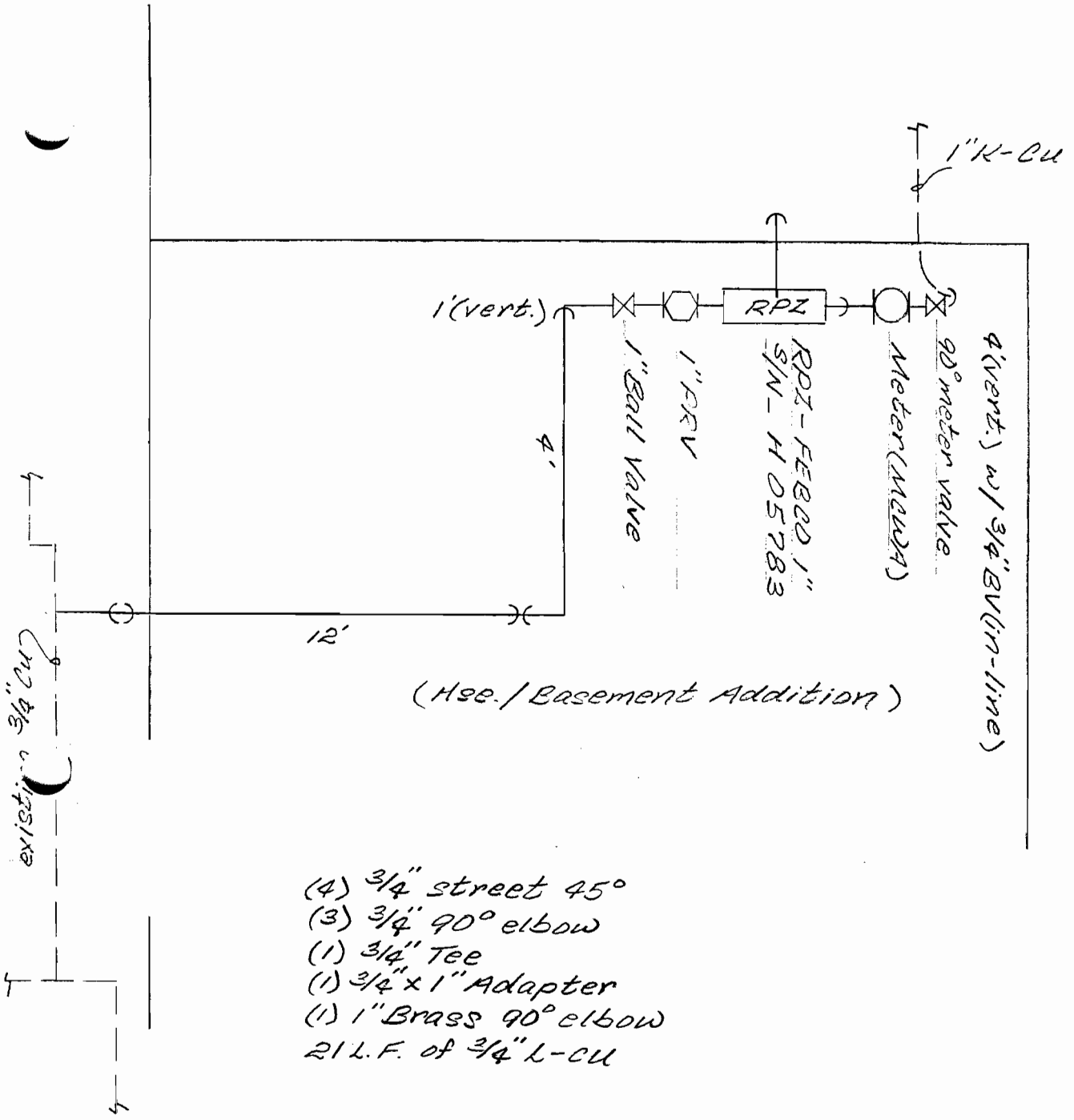

(4) 3/4" street 45°
(3) 3/4" 90° elbow
(1) 3/4" Tee
(1) 3/4" x 1" Adapter
(1) 1" Brass 90° elbow
21 L.F. of 3/4" L-Cu

Stearns & Wheler, LLC
ENVIRONMENTAL ENGINEERS & SCIENTISTS

Subject: Lehigh Valley RR Derailment Site
Lime Rock Road - House # 103

Date: 9-12-02
Job No.: D004327
Comp. By: Mike Polek
Checked By:

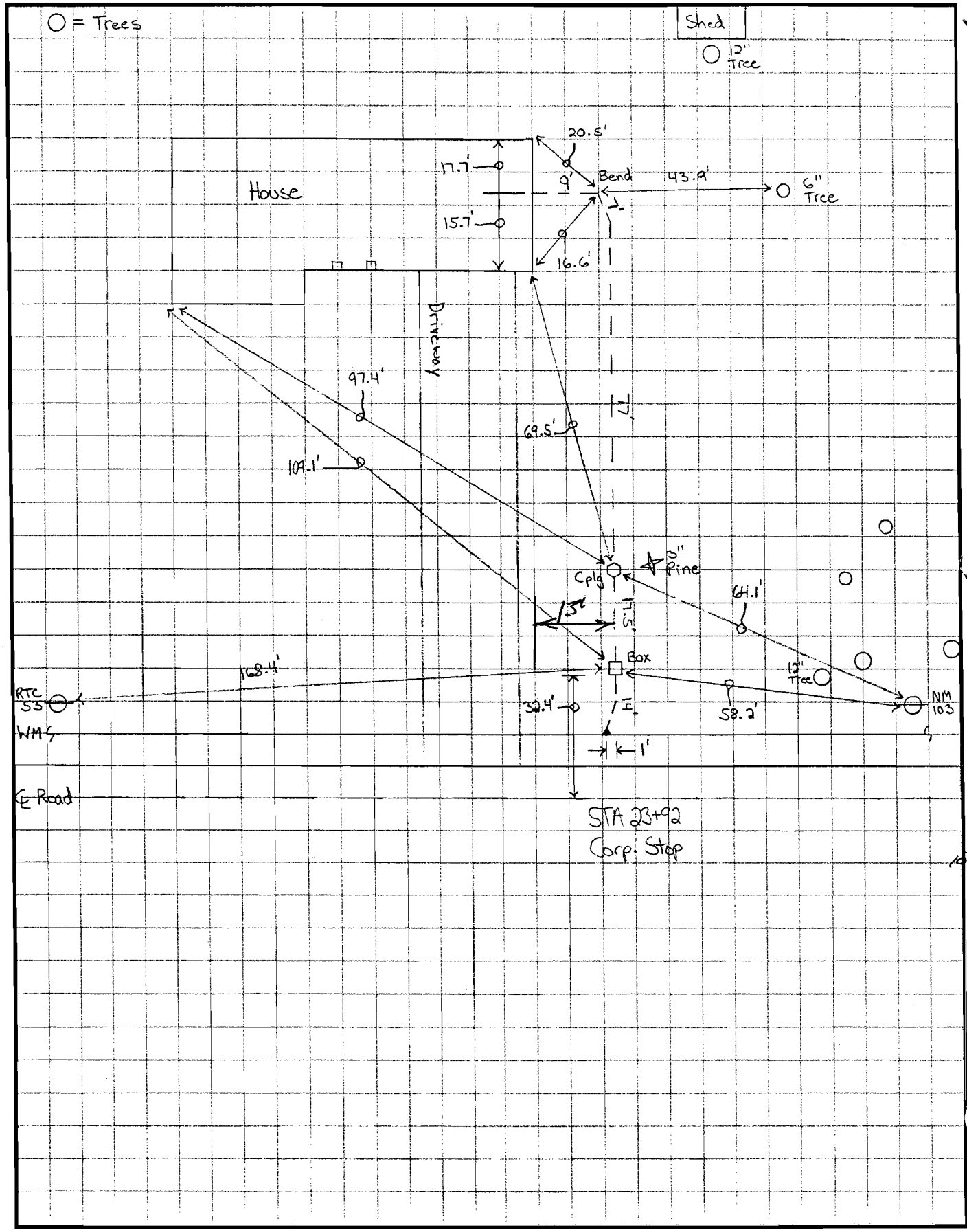

77
7
20.5
104.5

Sheet____ of____

2

materials

1" Ball Valve
31.5 L.F. of 3/4" L-Cu
(5) 3/4" 90° els

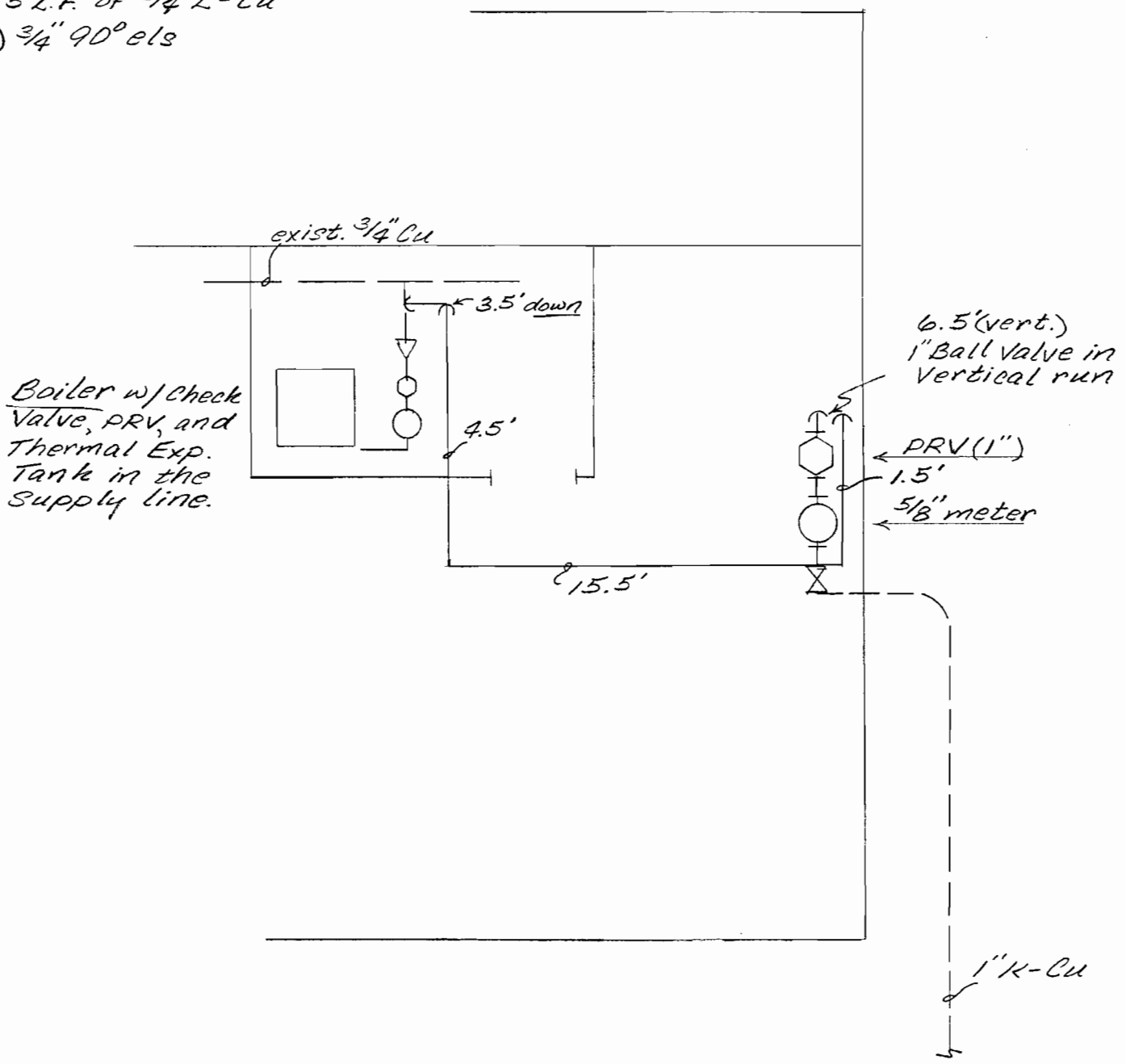

Stearns & Wheler, LLC
ENVIRONMENTAL ENGINEERS & SCIENTISTS

Subject	Date	Job No.
Lehigh Valley RR Derailment Site Lime Rock Road - House # 135	7-17-02 Mike Polek	D004327
	Comp. By	Checked By

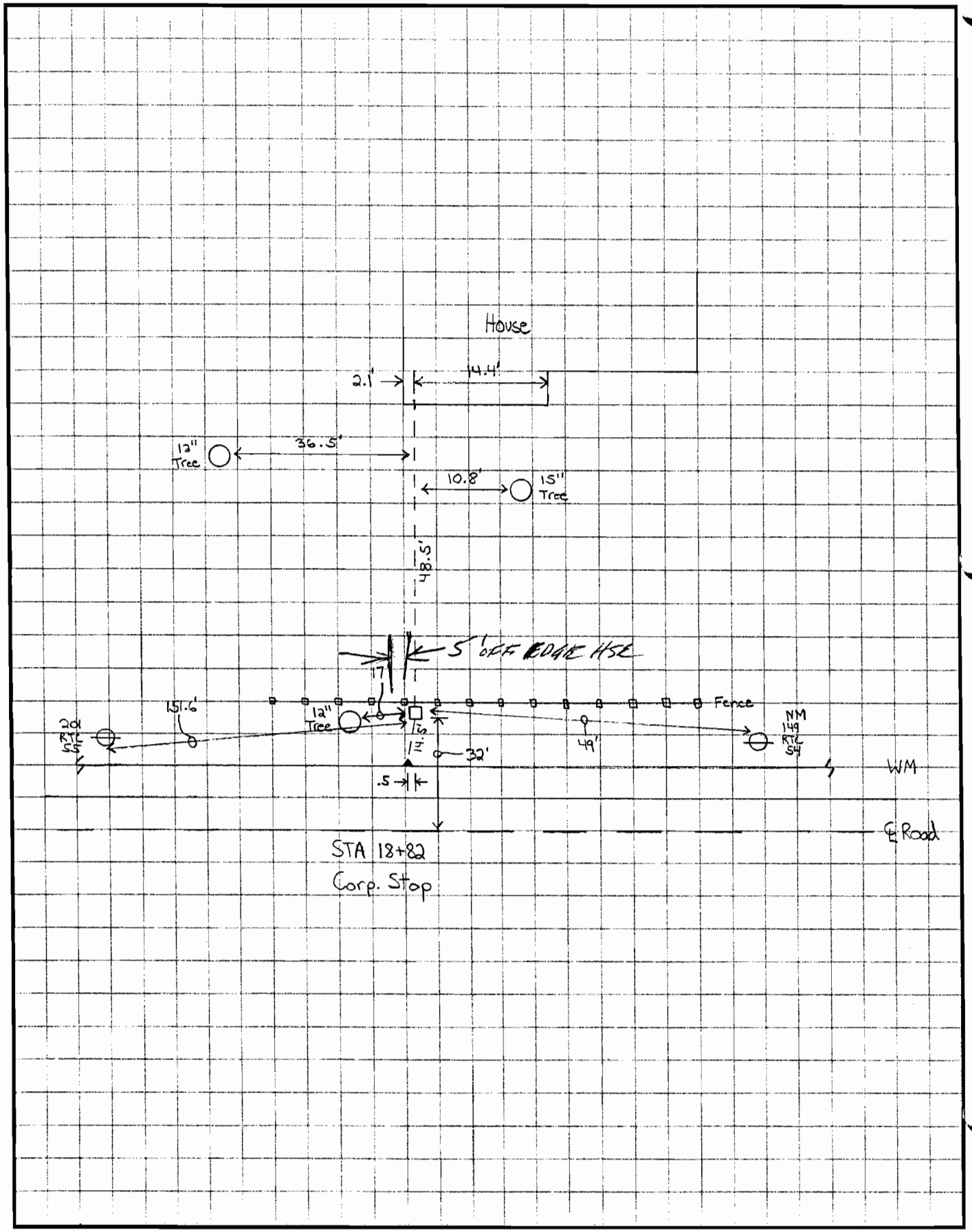

materials

(3) 3/4" 90° els
(1) 3/4" 45° el
(1) 3/4" x 1/2" bushing
1" Brass 90°
1" x 3/4" Brass Bushing
1" x 3/4" male adapter
1" close nipple
3/4" Ball Valve
17 L.F. of 3/4" L-Cu
1.5 L.F. of 1/2" L-Cu

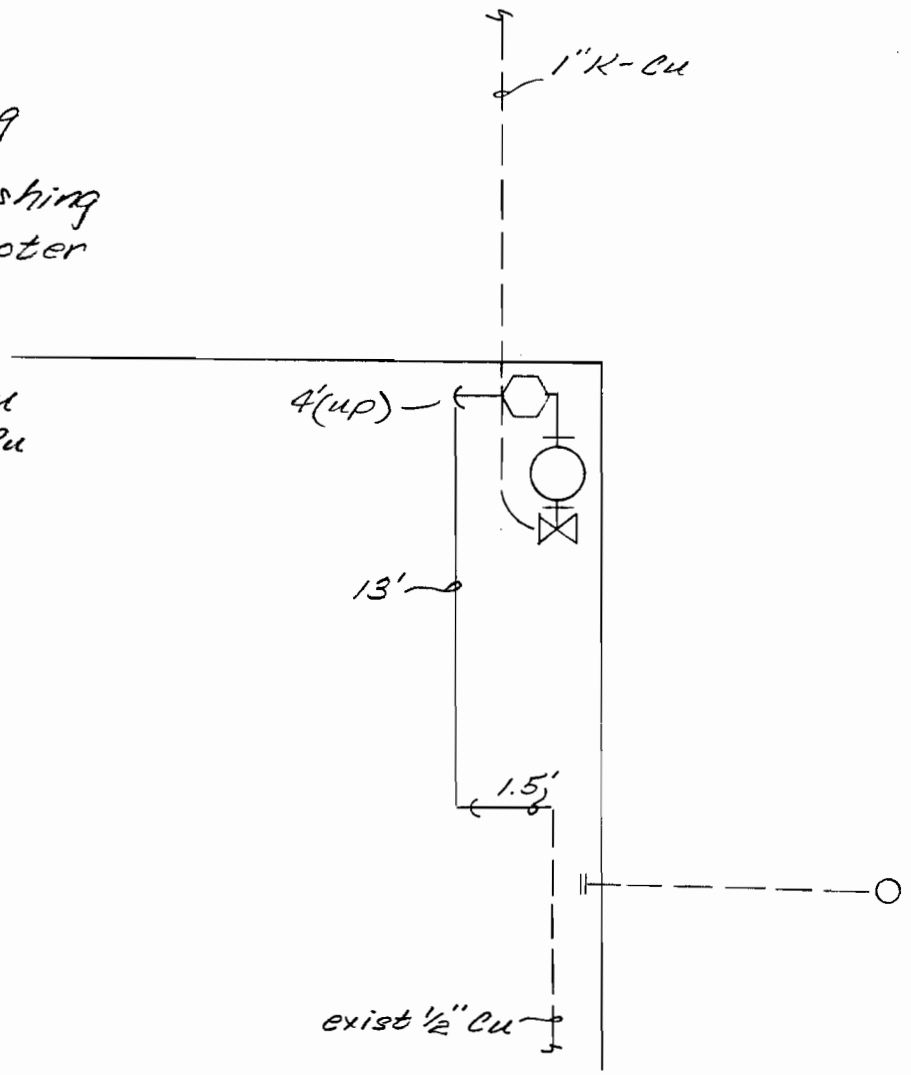

Stearns & Wheler, LLC
ENVIRONMENTAL ENGINEERS & SCIENTISTS

Subject	Date	Job No.
Lehigh Valley RR Derailment Site Limerock Road - House #139	-27-02	D004327
	Mike Polek	
	Comp. By	Checked By

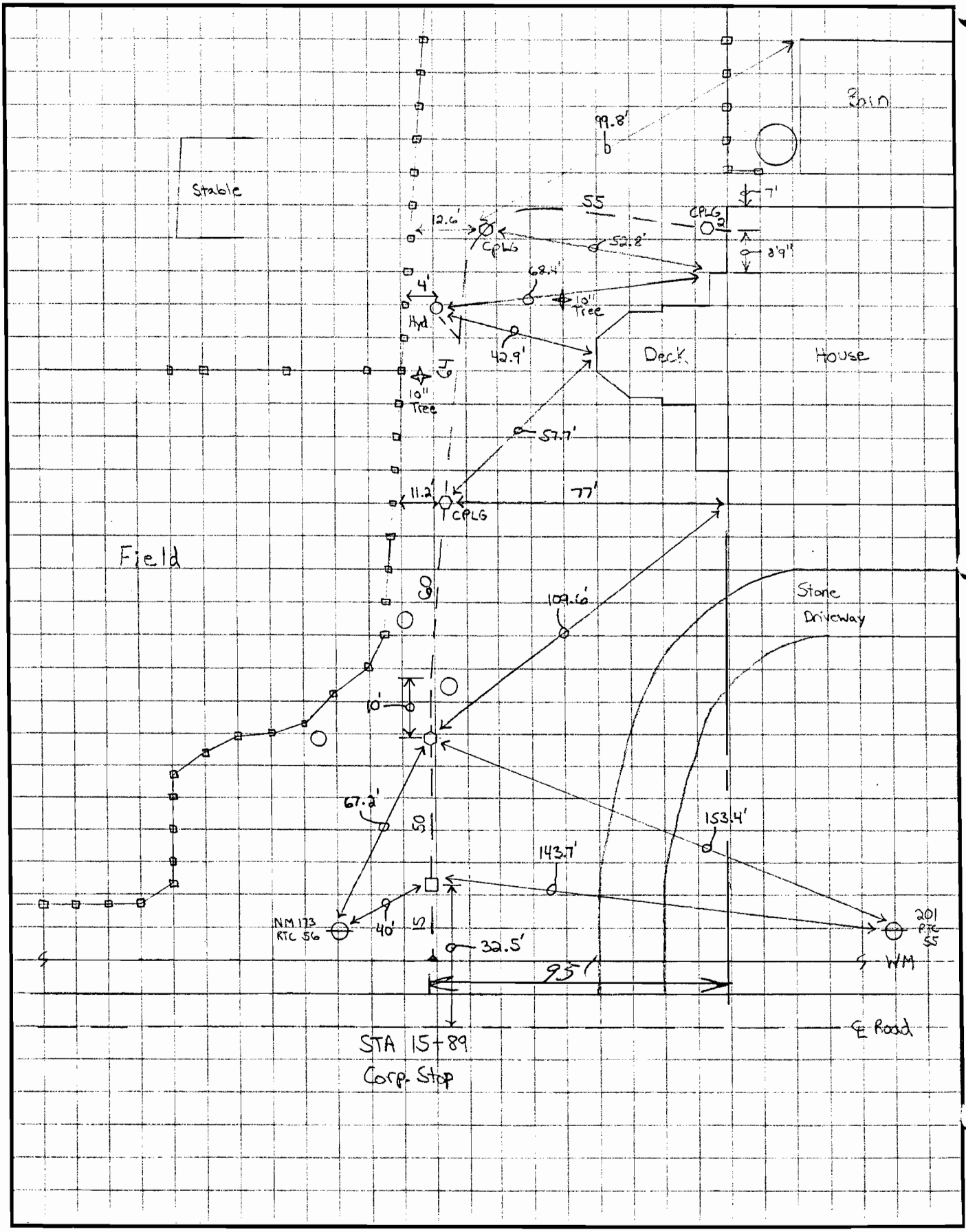

Sheet____ of____

RPZ- FEBCO model 860, 1½" A, 03866 (SERIAL No.), Type RP

PRV- Conbraco, #36-107, 1½"

Section View

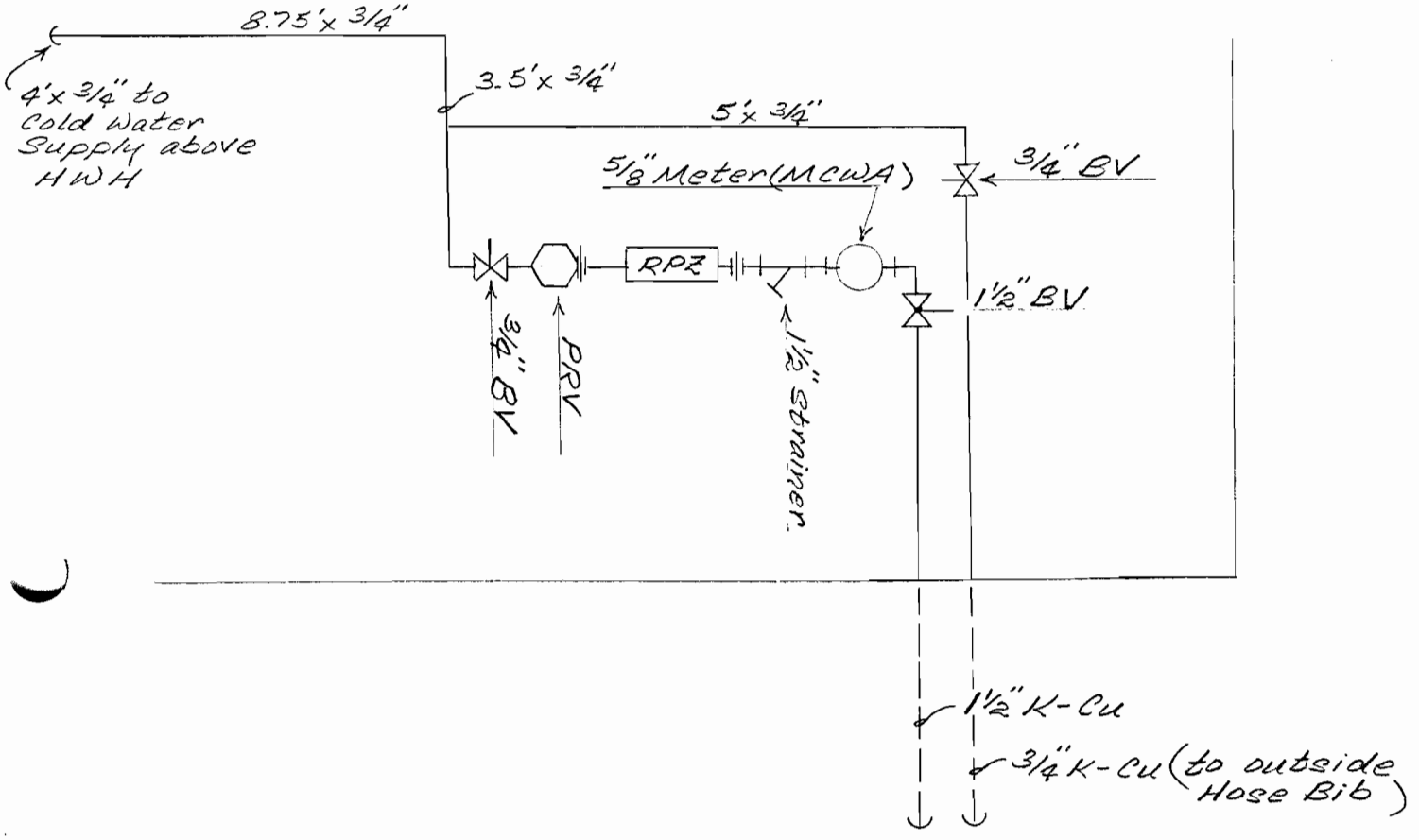

Plan View

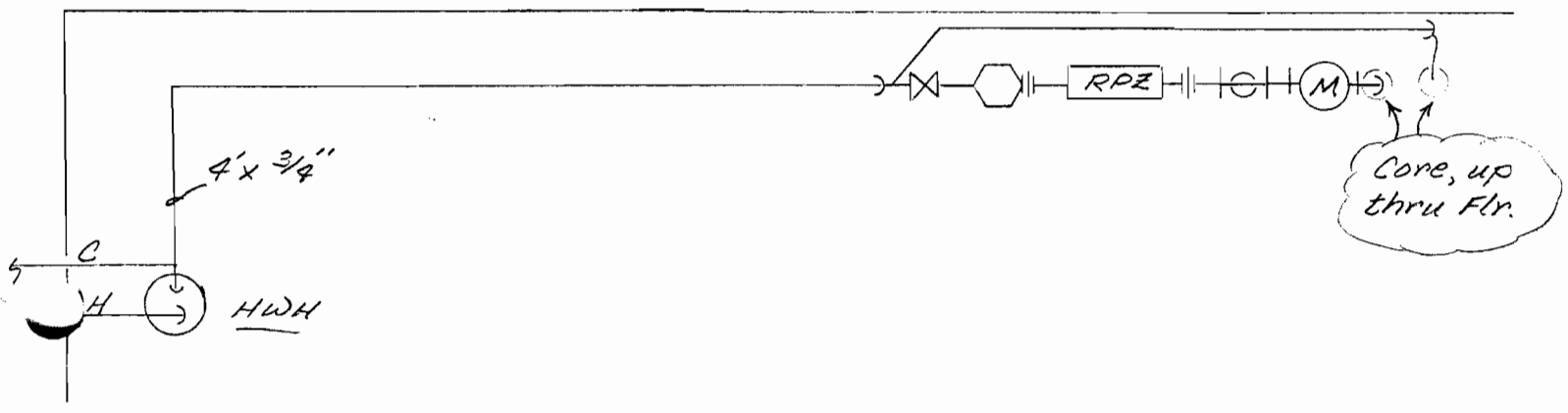

Stearns & Wheler, LLC
ENVIRONMENTAL ENGINEERS & SCIENTISTS

Lehigh Valley RR Derailment Site		-23-02	D004327
Subject		Date	Job No.
Limerock Road - Falcon Trap & Game Club	Mike Polek		
Comp. By		Checked By	

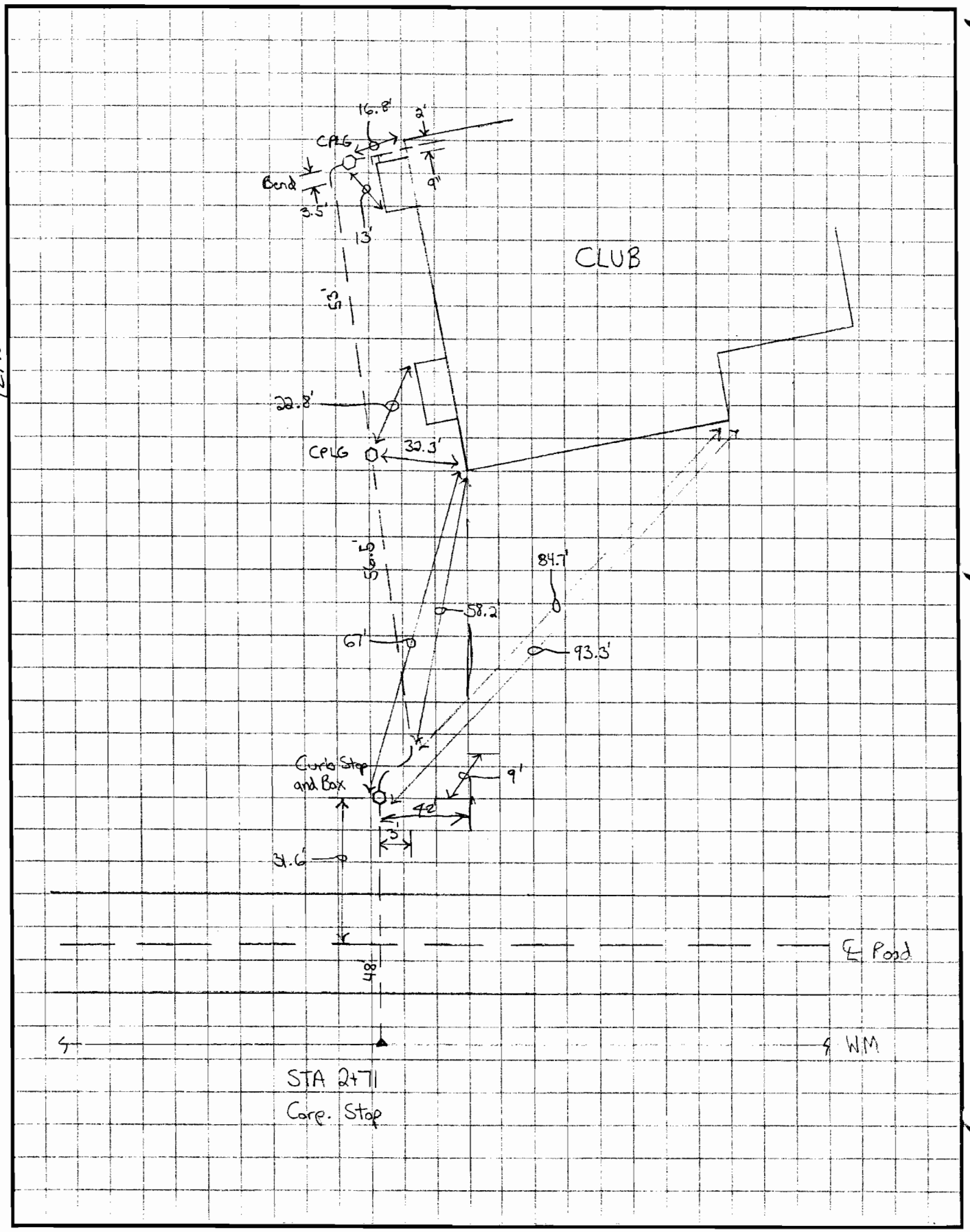

33.6'
3.5
16.8
12.9.8

Sheet____ of____

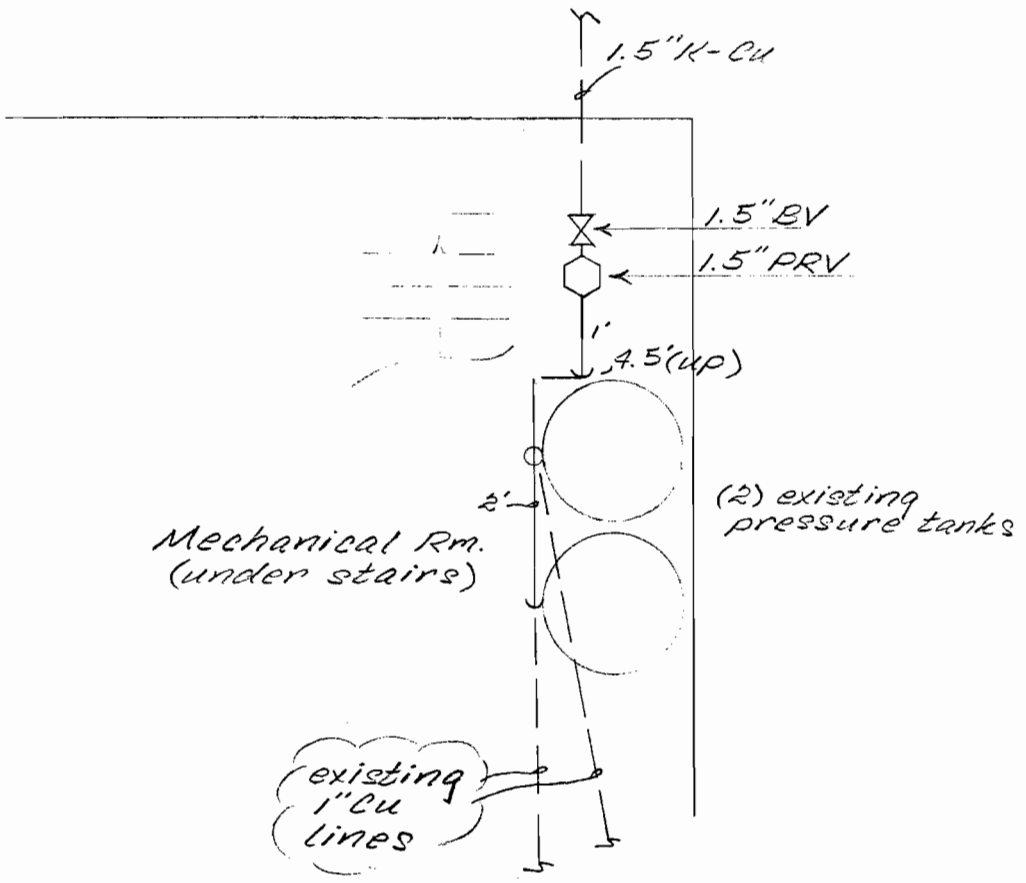
1.5"K-Cu
1.5"BV
1.5"PRV
1'
4.5'(up)
2'
(2) existing pressure tanks
Mechanical Rm. (under stairs)
existing 1"Cu lines

Stearns & Wheler, LLC
ENVIRONMENTAL ENGINEERS & SCIENTISTS

Subject #125 SPRING ST.

Date

Job No.

Comp. By

Checked By

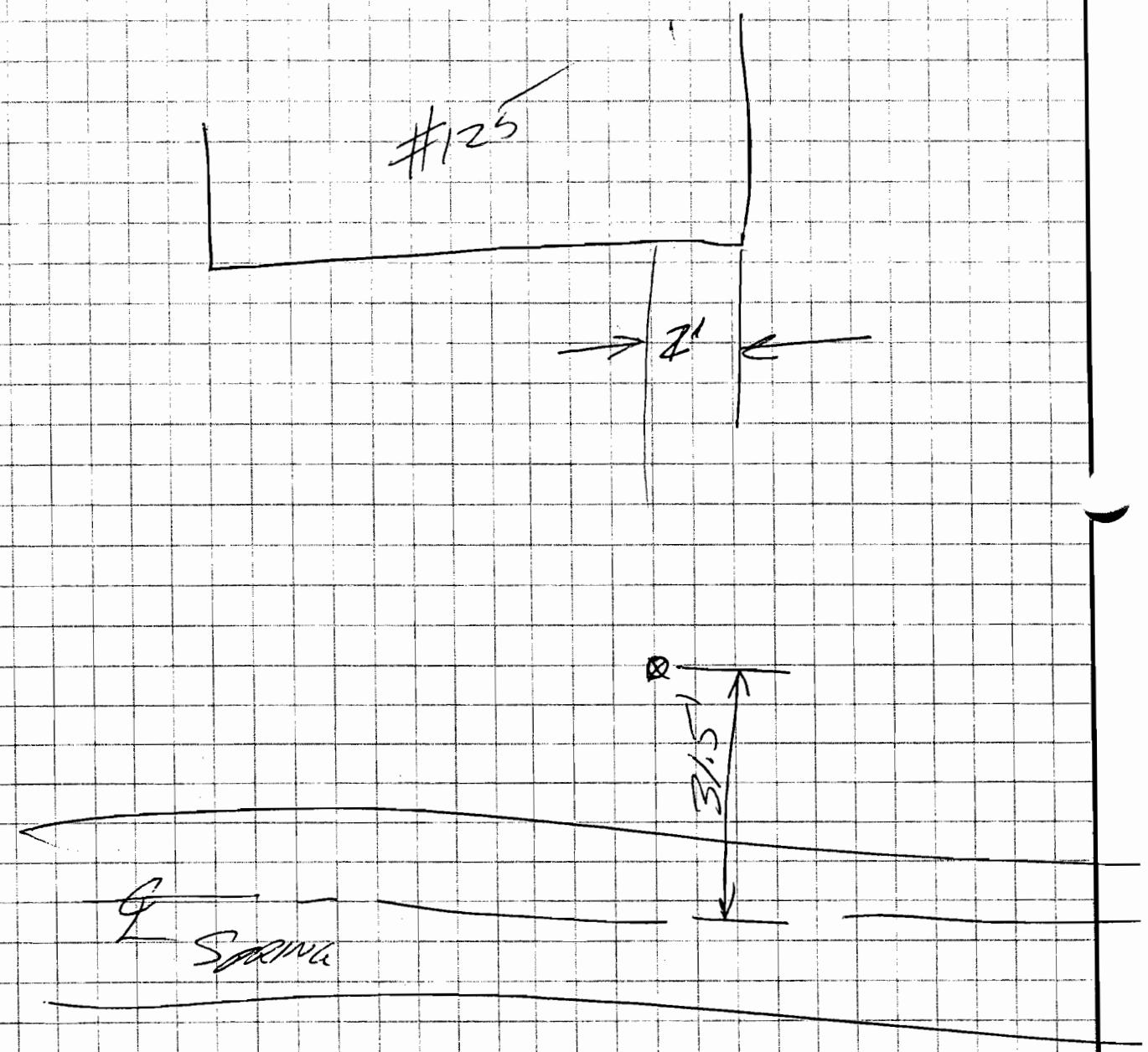

Sheet____ of____

Stearns & Wheler
Companies

Hse. #105 Spring St.
nt

Date | Job No.

Subject

Comp. By | Checked By

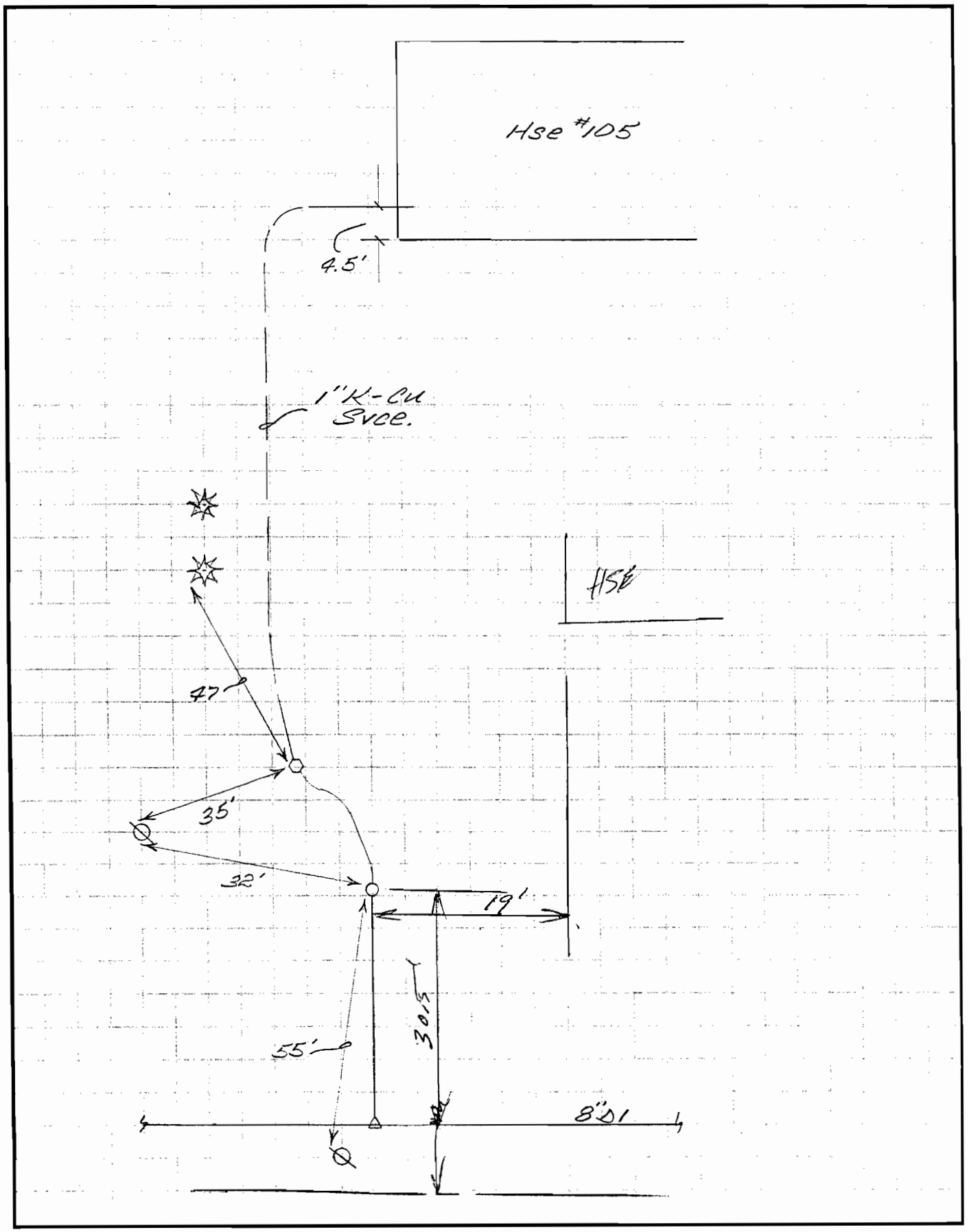

Sheet____ of____

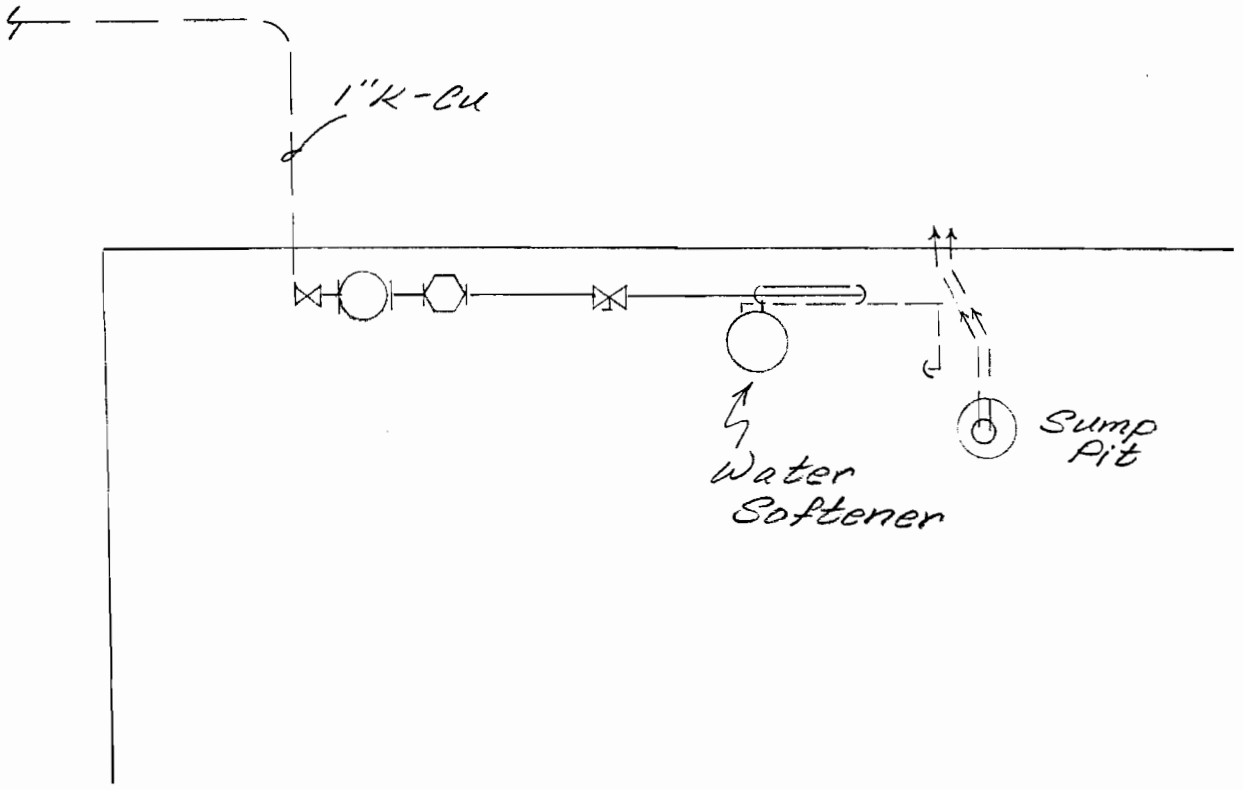
1"K-Cu
Water
Softener
Sump
Pit

Stearns & Wheler
Companies

Hse. #1 Spring St.
nt

Date Job No.

Subject

Comp. By Checked By

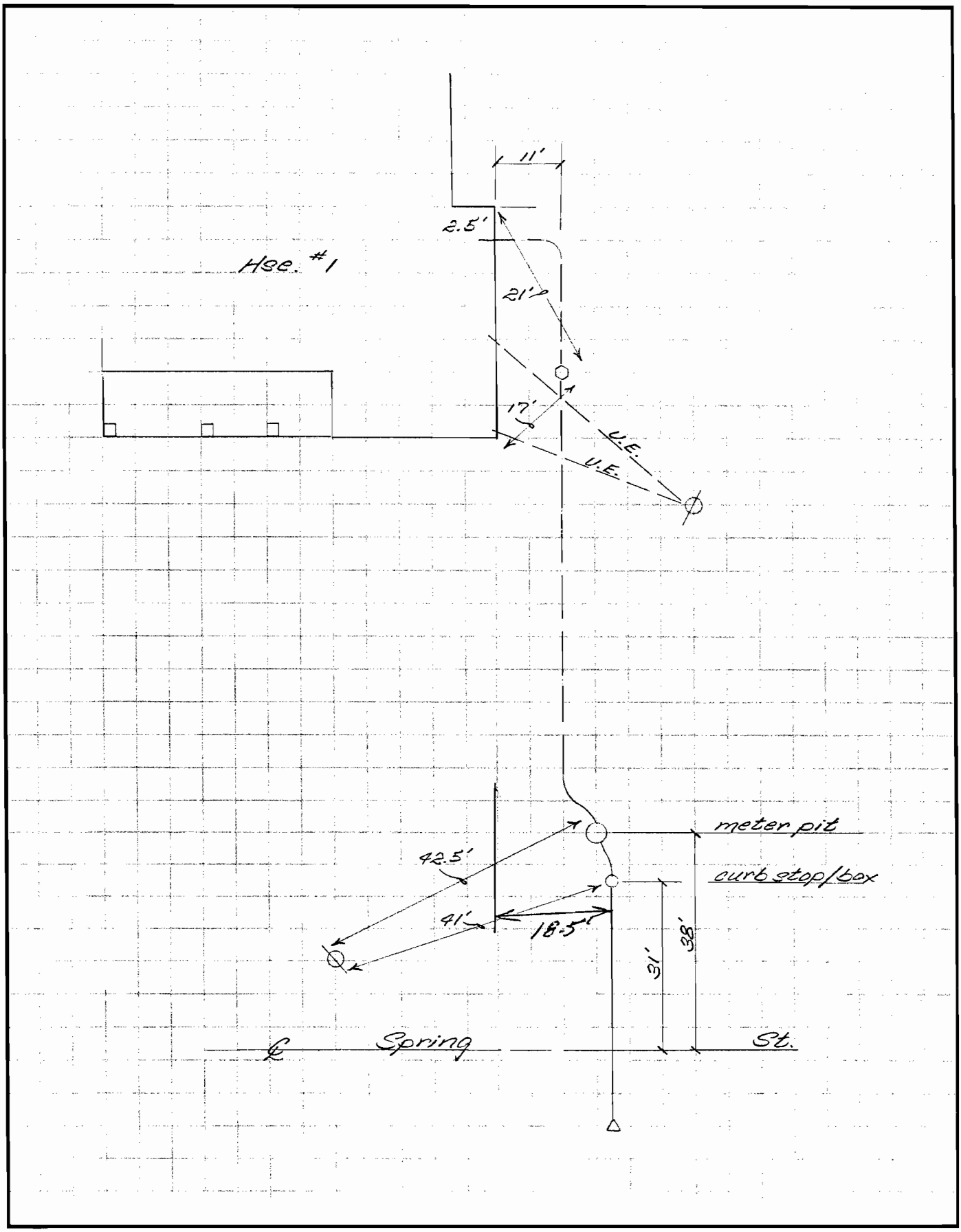

Sheet____ of____

Note: Hse. is on a Crawl Space

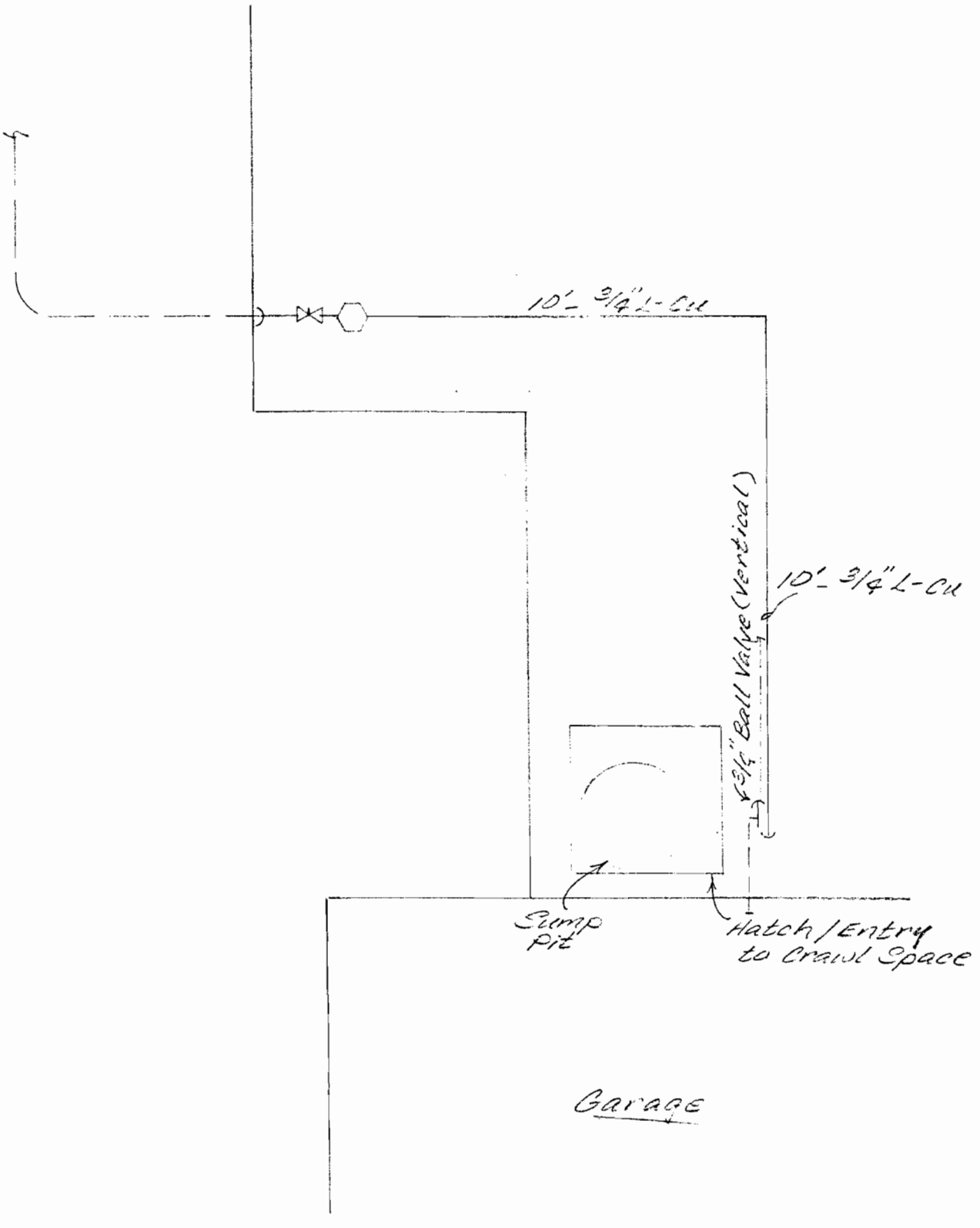

Stearns & Wheler
Companies

Hse. #84 Spring St.
nt

Date Job No.

Subject

Comp. By Checked By

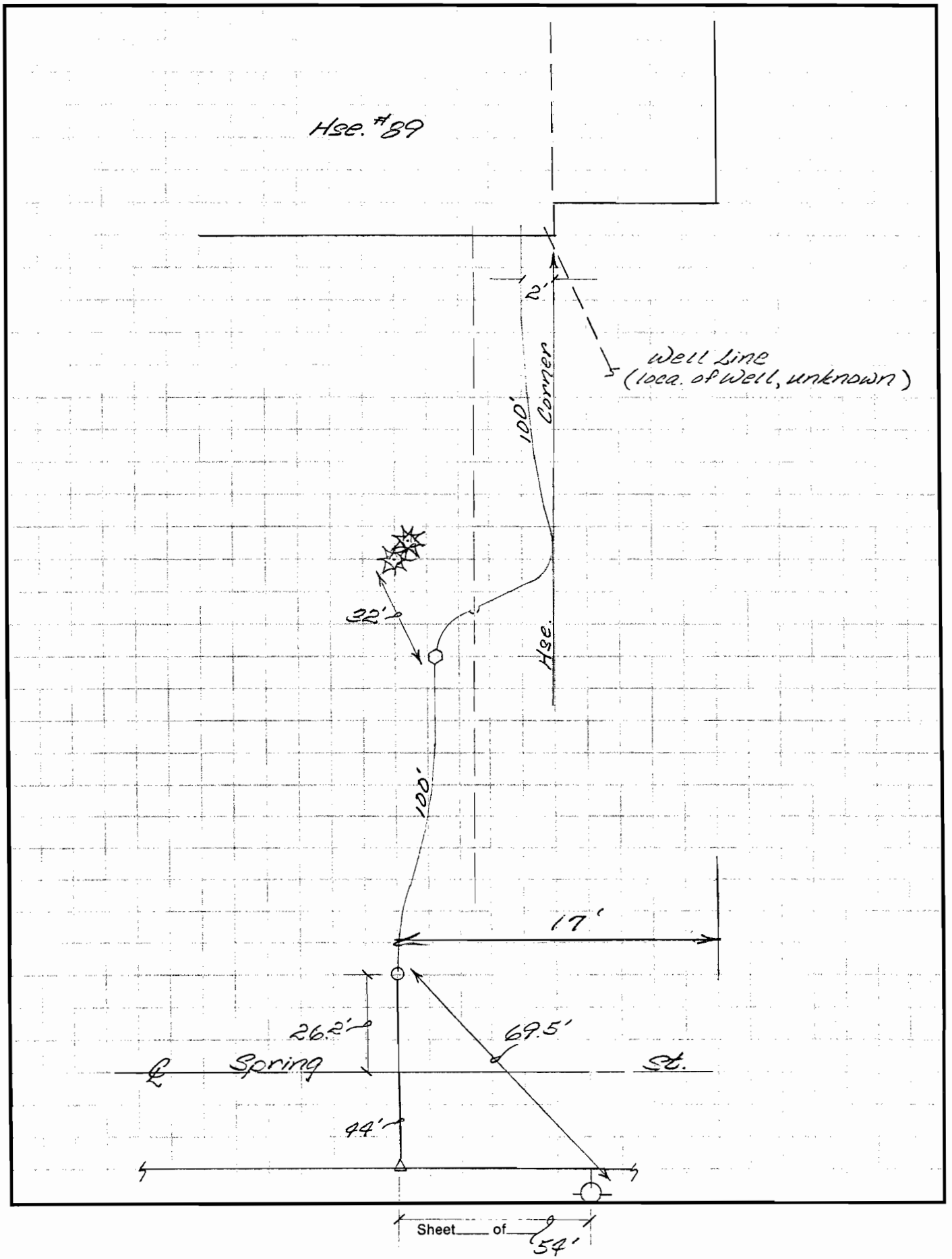

Sheet ___ of ___

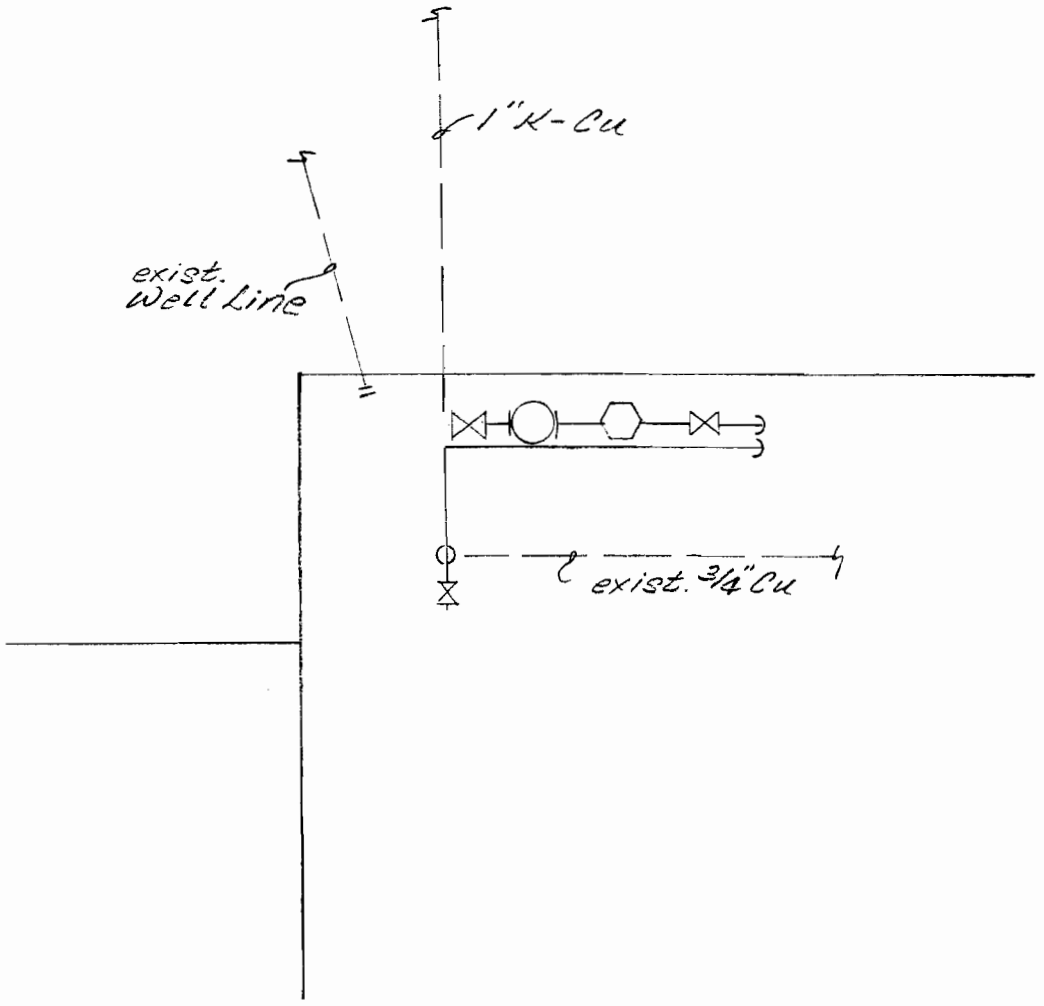
1" K-Cu
exist.
Well Line
exist. 3/4" Cu

Operation and Maintenance Manual

Milherst Construction, Inc.
2601 MILLERSPORT HWY.
P.O. BOX 631
GETZVILLE, NY 14068-0631
PHONE: (716) 688-9098 • FAX: (716) 688-9562

OPERATION & MAINTENANCE MANUALS

Water Distribution System
Lehigh Valley Railroad Derailment Site
New York State Department of Environmetal Conservation
Contract D004327

TABLE OF CONTENTS

1.) 8" Pressure Reducing Valve – Ross Model 40WR – S# L02207 & L02210
2.) 8" Pressure Reducing Valve – Ross Model 40WR-LD –S# L02208
3.) 2" Pressure Reducing Valve – Ross Model 98EP – S# 02246-248
4.) Febco Reduced Pressure Backflow Assembly – ½" through 2" Models 860/860U/880/880U
5.) Febco Double Check Backflow Assembly – ½" through 2" Models 850/850U

PRESSURE REDUCING VALVE

INSTRUCTIONS

Installation - Operation - Inspection - Maintenance

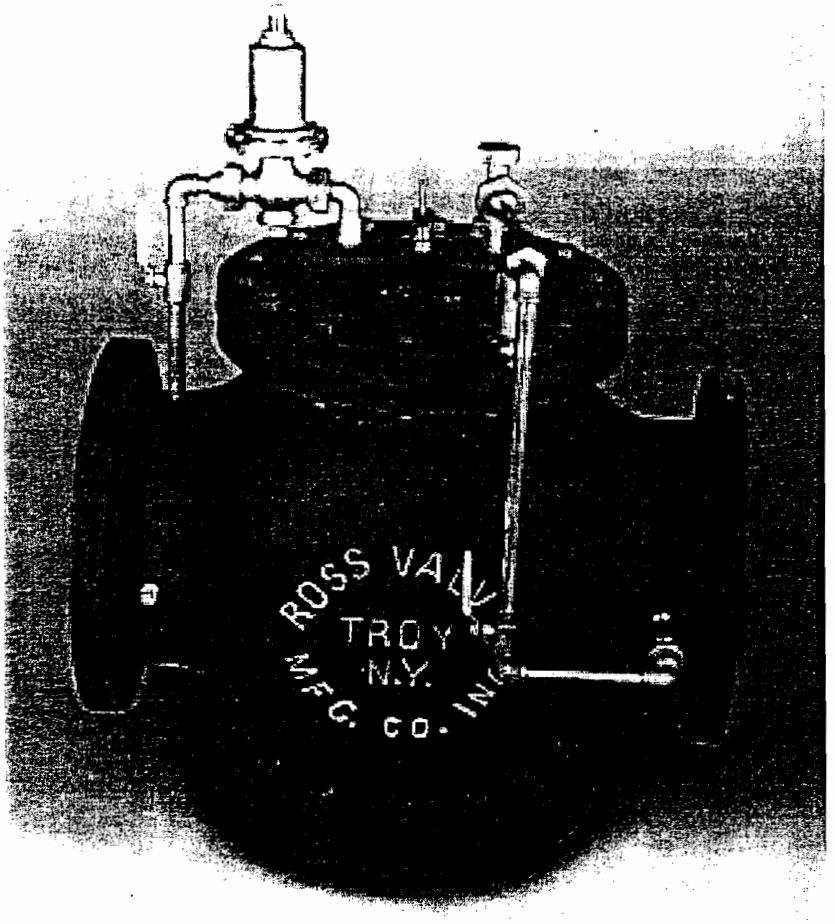

ROSS MODEL - 40WR
Pressure Reducing Valve L02207 + L02210

GLOBE FLAT SEAT STYLE

ROSS VALVE Mfg. Co., Inc.

6 OAKWOOD AVENUE, TROY, NY 12180 - PHONE 518/274-0961 - FAX 518/274-0210

PRESSURE REDUCING VALVE

Purpose: Control outlet pressure **Model Number: 40WR**

Sizes: 4" - 36"
Type: Throttling
Primarily Controlled By:
Hydraulic pressure
Located: In line
Purpose: To prevent outlet pressure from exceeding a preset maximum level
Inlet Pressure: Maximum: 300 psi
Inlet Pressure: Minimum: 5 psi
Construction: Cast iron (semi-steel) body with bronze trim
Control Devices:
Strainer: Model 5F-2
Valves:
Needle
Pilot: Pressure Reducing: Model 40WR With internal sensing port or equipped to receive a separate sensing line. (Can also be added to other basic valves as a customized feature.)
See overall parts lists and specific parts information for complete details.

Options

1. Angle body design (90 degree)
2. Cast steel or ductile iron body and stainless steel trim
3. Teflon coated cylinders

Customized Features

Any one or a selection of features can be added to the basic pressure reducing valve.

Code

- **CI** - Check Feature (Internal)
- **CE** - Check Feature (Cushioned)
- **R** - Reverse Flow Feature
- **PR** - Dual Pilot: Second Pressure Reducing Pilot Valve
- **BP** - Back Pressure Sustaining Pilot Valve
- **SC** or **SO** - Solenoid Pilot Valve: 2 Way
- **SG** or **SF** - Solenoid Pilot Valve: 3 Way
- **M** - Reversible Electric Motor
- **ES** - Higher Efficiency Strainer
- **LS** - Limit Switch

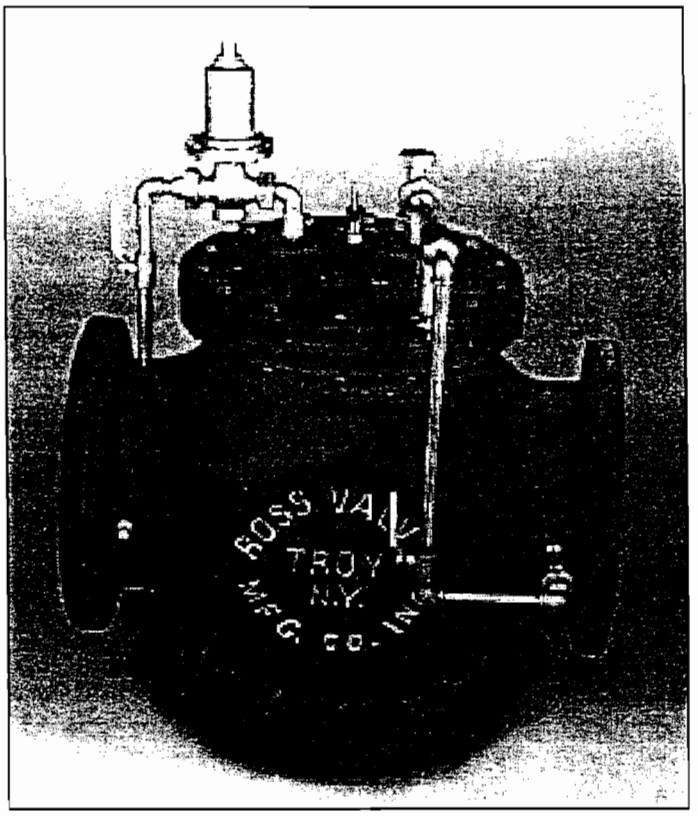

Ross engineers customize the basic 40WR to accommodate individual needs.

Basic Application

Control systems where the supply (inlet) pressure is higher than the discharge pressure.

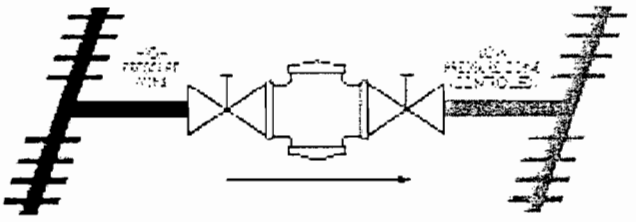

If: Supply pressure is higher than user capacity
Ross Main Valve will: Throttle to pass only enough water to the user to maintain a preset lower pressure.

PRESSURE REDUCING VALVE

Pilot Valves **Model Number: 40WR**

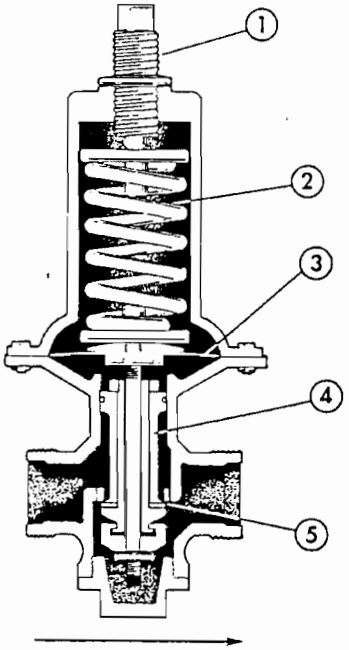

PARTS	
1	Adjusting Screw
2	Adjusting Spring
3	Diaphragm
4	Pilot Piston
5	Pilot Seat

Pilot: Internal Sensing Port

Primarily Controlled By:
Hydraulic pressure (downstream)
Located: On external piping which runs from the operating chamber to the outlet side of the main valve
Purpose: To control flow out of the mainline valve

Operation

1. When downstream (user) pressure increases, the
   a. Pressure backs up into the pilot valve, increasing pressure up through a hollow stem, under the diaphragm, pushing the diaphragm up.
   b. Pilot seat closes, restricting flow out of the operating chamber.
   c. Main valve closes accordingly.
2. When downstream (user) pressure decreases, the
   a. Pressure under the diaphragm decreases.
   b. Pilot seat opens wider, increasing flow out of the operating chamber.
   c. Main valve opens accordingly.

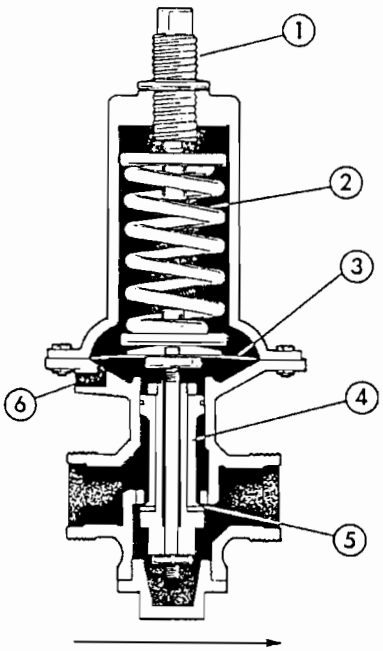

PARTS	
1	Adjusting Screw
2	Adjusting Spring
3	Diaphragm
4	Pilot Piston
5	Pilot Seat
6	Sensing Port

Pilot: External Sensing Port

Primarily Controlled By:
Hydraulic pressure (downstream)
Located: On external piping which runs from the operating chamber to the outlet side of the main valve
Purpose: To control flow out of the mainline valve
NOTE: Utilizes an external pressure sensing connection and requires a separate 1/2 inch line to the point of pressure control. Generally used where an accurate pressure signal can not be obtained at the valve body tap due to turbulence, velocity head, etc.

Operation

1. When downstream (user) pressure increases,
   a. Pressure backs up through top piping under the diaphragm, pushing the diaphragm up.
   b. Pilot seat closes, restricting flow out of the operating chamber, through the lower piping.
   c. Main valve closes accordingly.
2. When downstream (user) pressure decreases,
   a. Pressure under the diaphragm decreases.
   b. Pilot seat opens wider, increasing flow out of the operating chamber through the lower piping.
   c. Main valve opens accordingly.

Standard Pilot Adjustment Ranges

These ranges should be used as a guide only. When specific operating conditions are known, the pilot is constructed to give at least a 30% adjustment above and below the anticipated set point. Standard pilot adjustment ranges: 5 to 25 psi; 15 to 60 psi; 40 to 100 psi; 80 to 180 psi; 150 to 250 psi; over 200 psi.

PRESSURE REDUCING VALVE

Model Number: 40WR

Cavitation

Cavitation may occur when 2 factors, a high pressure drop combined with a low outlet pressure, are present. Cavitation damage is caused by the collapse of the small cavities formed in the fluid stream during the sudden decrease in pressure. When the valve body or pipe walls confine the fluid stream and raise the pressure above the vapor pressure of the "bubbles", minute implosions occur resulting in extremely high impact forces. Where these implosions contact the valve parts, structural damage will result. If conditions for cavitation are expected, consult a Ross engineer.

Sizing

DO NOT OVERSIZE.

Ideal Operating Position: 20% to 100% open - In this position seat erosion is at a minimum and pressure control is stable.

Maximum Flow Rates: Limit line velocity to approximately 15 fps. The valve is capable of passing larger quantities of water for short periods of time. Sustained rates at higher levels may result in high and increased valve maintenance.

Minimum Flow Rates: Intended for sustained flow rates. Valves (in good operating condition) can shut off drop tight and handle lower flows. Sustained rates at lower levels may result in high maintenance costs.

Note

It is important to service the pilot valve periodically in order to insure dependable service. If a second pilot valve (customized feature) is not added, this will require periodic shutdown of the system.

Consult a Ross Representative

1. For recommendations if conditions for cavitation are encountered.
2. To recommend correct valve sizing.
3. To build a customized valve for any specific requirements.

STRAINERS

Purpose: Protect external piping and control devices **Model Number: 5F-2**

Sizes: $^1/_2$" - 1"
Located: On any external piping
Purpose: To protect external piping and control devices from fouling or damage from foreign particles
Screen: Cylindrical Dutch weave stainless steel wire mesh
Piping Connection: Standard pipe thread

Option

Installed in parallel with the appropriate isolation valves to permit uninterrupted service while cleaning debris

Caution

1. Strainer should be "blown down" frequently to remove collected foreign material from the sediment chamber.
2. Strainer screens should be removed occasionally for inspection and thorough cleaning.

Note

1. To clean without shutting down the line, open the flush cock in the bottom cap for several seconds.
2. To remove the screen, which requires shutting down the line, unscrew the bottom cap assembly.

ROSS ADVANTAGE

Based on the configuration of the wire mesh screens, these strainers filter out particularly fine specks of debris.

Basic Application

Protect external piping and control devices, or any related size devices, from unwanted particles and debris.

Factory: Telephone (518) 274-0961
Fax (518) 274-0210

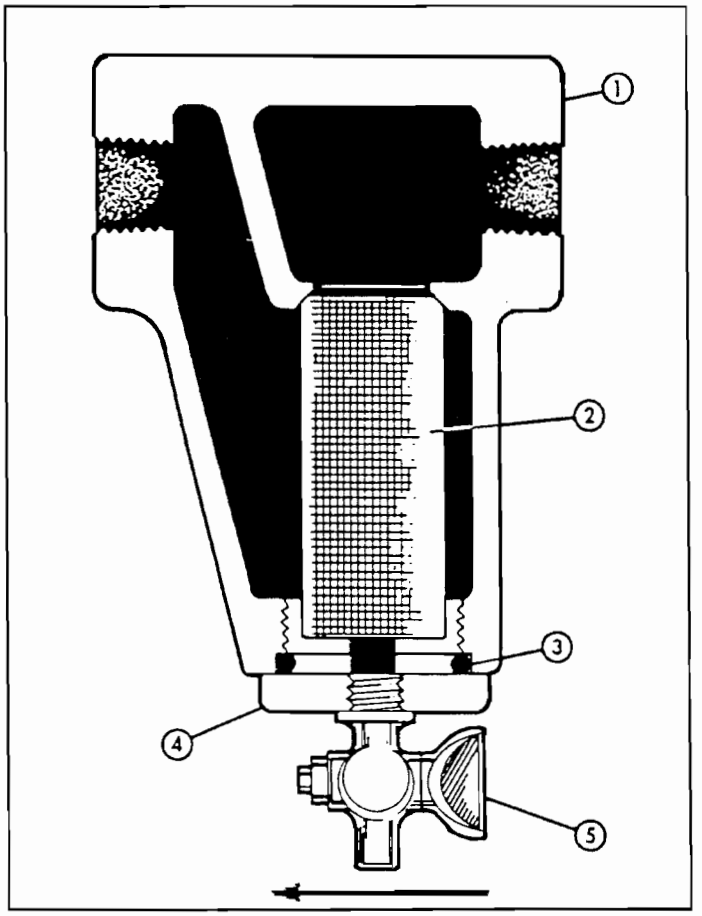

PARTS	
1. Body - Bronze	4. Cap - Brass
2. Screen - Stainless Steel	5. Flushing Cock - Brass
3. Cap Gasket - Rubber	

Operation

1. Water enters the cylindrical screen from the top and passes out through the sides of the cylinder.
2. Any particle too large to pass through .012 inch openings gets trapped in the cylinder, where, unless there is unusual turbulence, they settle at the bottom.

DIMENSIONS

Globe Body Minimum Clearances — Piston Valve Sizes: 4" - 36"

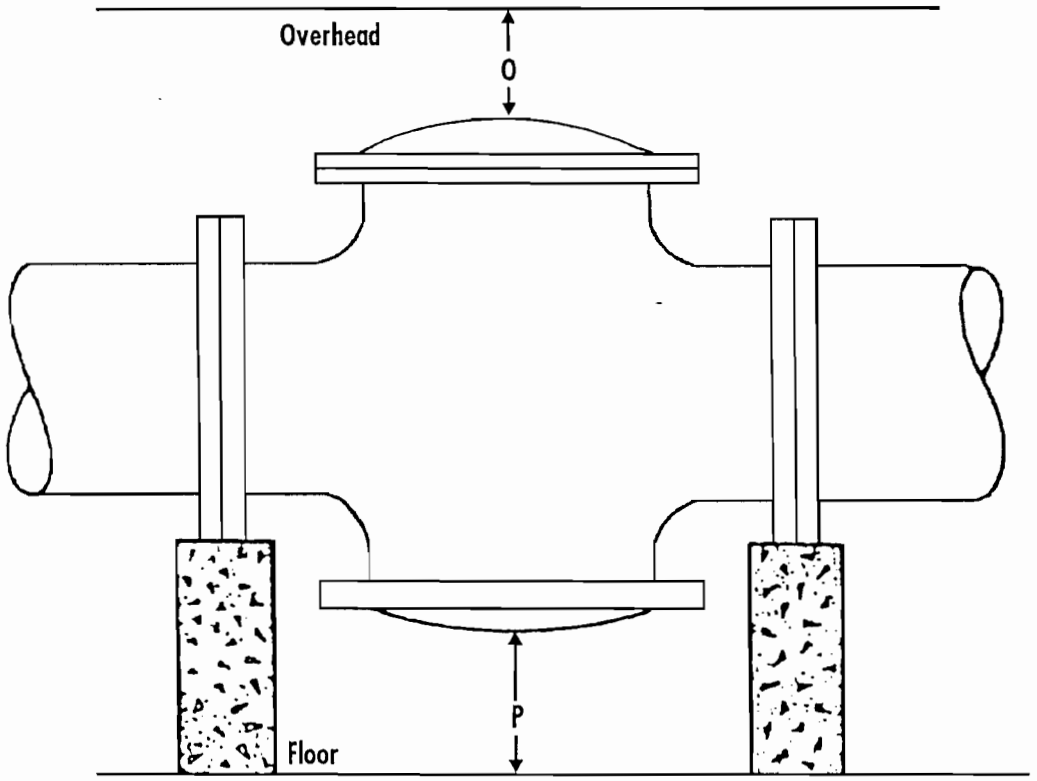

Size (Inches)	4"	6"	8"	10"	12"	14"	16"	18"	20"	24"	30"	36"
O	14	16	18	21	23	28	28	33	33	36	43	46
P	4 1/2	5 1/2	6 1/2	1	1	1	1	1	1	1	1	1

Note

1. Dimension "O" is clearance for removal of the top cap and piston for repacking the main valve. Additional working space for the convenience of the service man should be considered above as well as around the valve.
2. Dimension "P" as listed is the desirable clearance under the valve for removal of the STANDARD bottom cap. This dimension may be reduced to 1 inch for all valves on special applications.

Note

A. Do not obstruct vent hole located at the center of the bottom cap.
B. Consideration should be given for installation of valves 14" or larger under manhole in the roof of the valve vault or for additional clearance above the valve since a mechanical hoist will probably be required for removal of the piston. An eye bolt or hook cast in the cover slab over the center of the valve is useful.
C. If clearance under the valve is limited, dimensions "O" and "P" can be modified. Consult the factory concerning special applications.

ROSS ANGLE OR GLOBE VALVE

INSTALLATION

SHIPMENT:
The valve is tagged with all necessary identification marks before shipment. Each valve is thoroughly tested and pre-adjusted at the factory to expected field conditions.

STORAGE:
If necessary to store the valve before installation, it should be protected from the elements. Inside storage is recommended. If this is not possible, the valve should be protected from dirt, heat, freezing, and direct sunlight. If extended storage is anticipated, the valve should be placed with the piston in the vertical plane (all valves are shipped in this orientation).

MAIN VALVE INSTALLATION:

1. Check inside of the valve for wooden shipping blocks, or other foreign material.

2. If possible, flush line before inserting valve.

3. Place valve in line with flange marked "inlet" towards the supply source.

4. If external piping and controls are not attached to valve when shipped, connect unions identified with numbered tags.

5. Attach 1/4" gauge cocks to body taps on back side of valve.

   CAUTION: Do not obstruct the vent hole in center of bottom cap (16) of globe body, or in differential cylinder bracket (27) of angle body.

6. Allow enough clearance above the valve for piston removal. Be sure arrow on hydraulic pilot body points *away* from the top cap and *towards* the downstream body connection.

7. Wire solenoid pilot(s) (if furnished) into electrical circuit.

STARTING OPERATION:

1. Close isolation ball valve (18) in control piping.

2. Open the main line gate valve (if installed) on the discharge (downstream) side of the valve. This prevents trapping high inlet pressure under the pilot diaphragm.

3. Open main line gate valve (if installed) on the high pressure or inlet side of the valve *slowly.*

4. Open isolation ball valve (18) in control piping.

5. Energize or de-energize solenoids (if furnished) for opening valve. A manual operator is usually supplied on the solenoid to operate the valve if electrical power is not available. It is either a "knurled" nut or a plastic tab located on the solenoid. To actuate, press in and give 1/4 turn to lock valve in position.

   Important: Remember to take manual operator off when electrical service becomes available.

It may be necessary to create line pressure at the valve artificially during start-up. This may be done by partially closing the main line gate valve on valve discharge if so equipped. In other cases, it may be necessary to apply pressure to the valve indicator rod with a wrench handle or block of wood until the valve operating chamber is pressurized. Loosening the union of the control piping on the top cap side of the hydraulic pilot will help bleed air and give a positive indication when the operating chamber is full.

ROSS GLOBE VALVE

INSPECTION - SERVICE RECORD

VALVE LOCATION/I.D. _____

SIZE _____ MODEL _____ SERIAL NO. _____

VALVE - OPEN ☐ CLOSED ☐ INDICATOR ROD EXPOSED ___ INCHES ABOVE STUFFING BOX CAP

MAIN VALVE OPERATED MANUALLY YES ☐ . . . NO ☐

OPERATING PRESSURES - INLET (SUPPLY)_____ OUTLET (DOWNSTREAM) _____

EXTERNAL LEAKS	NONE	SLIGHT	MAJOR
. . . . . INDICATOR STUFFING BOX	☐	☐	☐
. . . . . BOTTOM CAP VENT HOLE	☐	☐	☐
. . . . . DIAPHRAGM VENT-HYDRAULIC PILOT	☐	☐	☐
. . . . . SOLENOID PILOT EXHAUST PORT	☐	☐	☐

OTHER CONDITIONS _____

STRAINER FLUSHED . . . . . YES ☐ . . . . . NO ☐

. . . . . SCREEN EXAMINED . YES ☐ . . . . . NO ☐ . . . . . CLEANED ONLY ☐

. . . . . SCREEN CONDITION GOOD ☐ . . . . . POOR ☐ . . . . . INSTALLED NEW SCREEN ☐

NEEDLE VALVE(S) (EXAMINE NEEDLE & SEAT FOR WEAR)

. . . . . OPENING CONTROL . CLEANED ☐ . . . . . ADJUSTED ☐ . . . . SET POINT _____

. . . . . CLOSING CONTROL . . . . . CLEANED ☐ . . . . . ADJUSTED ☐ . . . . SET POINT _____

HYDRAULIC PILOT ADJUSTED . . . . . NO ☐ . . . . . YES ☐ . . . . _____ TURNS

. . . . . CLOCKWISE ☐ . . COUNTER-CLOCKWISE ☐ . . . . SET POINT _____

. . . . . REBUILT . . . . AT FACTORY DATE _____ . IN FIELD DATE _____

. . . . . NEW HYDRAULIC PILOT REPLACEMENT . . . . . DATE _____

SOLENOID - COIL TESTED . . . . . NO ☐ . . . . . YES ☐ . . . . . REPLACED ☐

. . . . . SEATS - INSPECT & CLEAN _____

. . . . . REBUILT . . . . AT FACTORY DATE _____ . IN FIELD DATE _____

. . . . . NEW SOLENOID REPLACEMENT . . . . . DATE _____

MAIN VALVE INTERNAL CONDITION -

. . . . . MAIN CYLINDER (14) _____

. . . . . BOTTOM CAP CYLINDER (23) _____

. . . . . SEAT DISC/SUPPORT/RING _____

. . . . . BODY TAP CONNECTIONS _____

. . . . . MAIN VALVE REPACKED _____ DATE _____

ACTION RECOMMENDED _____

_____

REPORT BY _____ DATE _____

ROSS VALVE MFG. CO., INC., TROY, NY 12180 · PHONE 518/274-0961 · FAX 518/274-0210

REPAIR INSTRUCTIONS - GLOBE BODY VALVES

When entering a valve pit to inspect a valve, all regulations regarding Confined Space Entry should be observed.

So some recommendation may guide the operator, we suggest periodic inspections in order to check for proper valve operating pressures as well as any visual leaks. Should the operator encounter any external leakage or find any abnormalities in the operating pressures which appear to be caused by the valve, the valve should be scheduled for service.

A reliable indication of internal packing condition can be obtained by observing any leakage from the vent hole in the center of the bottom cap. When leakage becomes significant, packing replacement should be made. As a general statement, the overall average life of a set of packings is 7 to 10 years. This may vary considerably because of specific operating conditions.

After observing pressures and inspecting for external leakage, the flush cock on the strainer should be opened momentarily to remove accumulated material. The needle valve cap should be removed and the needle closed 1/2 turn, opened 1 full turn, and then closed 1/2 turn to its original position.

STEPS FOR INTERNAL REPAIRS:

All repairs and parts replacement may be made without removing the valve from the line. Internal repairs are made by removing the top cap of the valve. All internals are accessible through the top.

Shut inlet main line isolation valve, then shut outlet main line isolation valve. Open gauge cocks to de-pressurize the valve.

Remove indicator rod by inserting a nail through hole and unscrewing. Do not pull through stuffing box. Then remove top cap bolts and top cap. Be careful not to bend indicator rod.

In 8" and larger valves, withdraw piston by either removing two 3/8" bronze bolts in top stem nut and installing lifting device (horseshoe shaped piece of steel with two holes) over nut; or by looping a cable or nylon rope around these bolts. **Be sure lifting device is secure before removing piston.** In 4" and 6" valves, a threaded eyebolt should be screwed in the indicator rod hole.

Inspect both main bushing (Part No. 14) and bottom cylinder (Part No. 23) for mineral build-up or scoring. Smooth with emery or replace if necessary. Inspect seat ring for damage. Repair as necessary.

Secure main piston on a pipe threading stand (or lay piston on floor on rags or a similar cushioning material). Loosen top stem nut (Part No. 15) which holds the cup plate assembly. Remove cup plate bolts, nuts and copper washers on 8" cups and larger. Replace the leather cups (one faces up, one faces down). Re-install with new packings in the reverse order as outlined above.

Caution - The clamping bolts should be tight so that the packings are held securely and no leak occurs. Do not over-tighten so that the packing is deformed, however. All cup packings are impregnated with lubricants so that no external lubrication is necessary or desirable.

To replace the seat packing, it is necessary to determine if the valve is constructed with a "sliding" or a "flat" type seat. The sliding type seat has the seal or seat packing clamped in the valve body underneath the iron wall that separates the inlet and outlet valve chambers. It consists of a flanged packing held in place by a split bronze seat support ring. The lip of the packing "looks down" and care should be taken that the packing is concentric with the valve bore before the clamping bolts are tightened. In the "flat" type seat, the seat packing is located on the valve piston, where it is clamped between two plates and held by a stem nut (Part No. 7). Removal of this nut allows the plates to be separated and the packing replaced.

Replacement of the bottom cups (Part No. 5) is accomplished by removing the bottom stem lock nut (Part No. 6) and the flanged bottom guide nut (Part No. 3). Install the seals with the lip of both cups "looking up". Again, when re-assembling, be careful not to over tighten so that the cups are deformed.

Re-insert the piston being careful not to crimp the lower main cup when it enters the main bushing. The piston should move freely and drop of its own weight.

Replace the top cap and control piping (being sure to thread in the indicator rod), then restore water pressure. Be sure to open the discharge isolation valve first so that high inlet pressure is not trapped against a closed outlet valve.

All replaceable packings and gaskets are stock items and may be ordered as a repair kit for valve serial number _____. They are available for regular UPS delivery or next day service.

All spare parts are available from: Ross Valve Mfg. Co., Inc., 6 Oakwood Avenue, Troy, New York, 12180
Phone: (518) 274-0961, Fax: (518) 274-0210

Support Services – Ross Valve provides personal service in every phase of development, installation, and maintenance. Services include:

DEDICATED SUPPORT LINES

- Sales engineers available Monday through Friday, 6 a.m. to 5:30 p.m. to help you with any questions — (518) 274-0961
- Fax machine — (518) 274-0210
- After hours phone/fax line — (518) 279-4373
- E-Mail — rossvalve@aol.com

Service after sale — We are always available to provide answers to any questions, or provide technical assistance. No sale is ever "final" — we continue to work with you, until you are 100% satisfied with your valve.

TRAINING

Factory Training — Ross Valve believes that our customers should know as much as possible about our products. That is why we periodically host Customer Training seminars at our facility in Troy, New York. Here, our customers learn the workings of the valves, how to correctly maintain them, and how they are manufactured.

In addition, Ross representatives are often in the field giving product seminars for your convenience.

WARRANTY

All valves and materials are guaranteed free from defects for 1 year from the date shipped.

FIELD SERVICE

When a repair, upgrade, or modification is required for an existing Ross Valve, factory-trained Ross Service Technicians offer the best service available, including:

- On-site/hands-on training for your staff.
- Trouble shooting expertise for our valves and your entire system.
- Technical assistance for start-up or continuing training.
- Fully inventoried service vehicles to allow replacement of necessary parts.
- Ability to return older valves to "like-new" condition.
- Confined Space/OSHA Trained.

MAINTENANCE

Ross Valves are economically rebuilt. Every internal part is replaceable through the top of the valve, without removing it from the line. All seals and packings are replaceable, which contributes to the valve's longevity.

Ross Valve stocks a wide variety of repair parts which can be received by the customer as early as the next day. In-house computer links track packages to ensure timely delivery.

Detailed historical record keeping gives us a full report of all maintenance or upgrades that have been made on each valve. This allows us to evaluate performance in the past and maximize performance in the future.

ROSS VALVE Mfg. Co. Inc.

6 Oakwood Ave., P.O. Box 595, Troy, NY 12181, USA

Phone: (518) 274-0961 Fax: (518) 274-0210
After Hours: (518) 279-4373 E-Mail: sales@rossvalve.com
Website: www.rossvalve.com

PRESSURE REDUCING VALVE

INSTRUCTIONS

Installation - Operation - Inspection - Maintenance

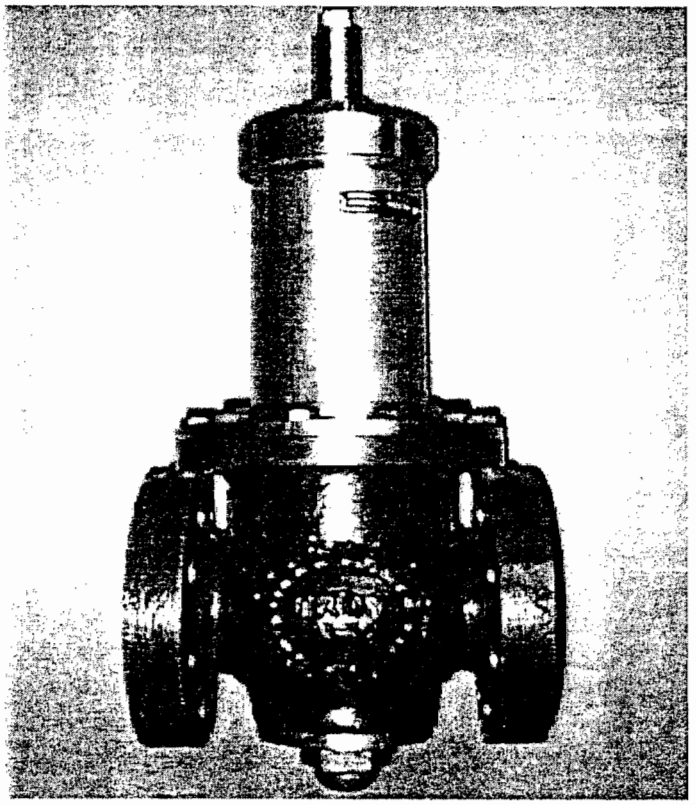

ROSS MODEL - 98EP
Direct Acting Pressure Reducing Valve

Serial #S 02246-248

ROSS VALVE Mfg. Co., Inc.

PO BOX 595, TROY, NY 12181 - PHONE 518/274-0961 - FAX 518/274-0210

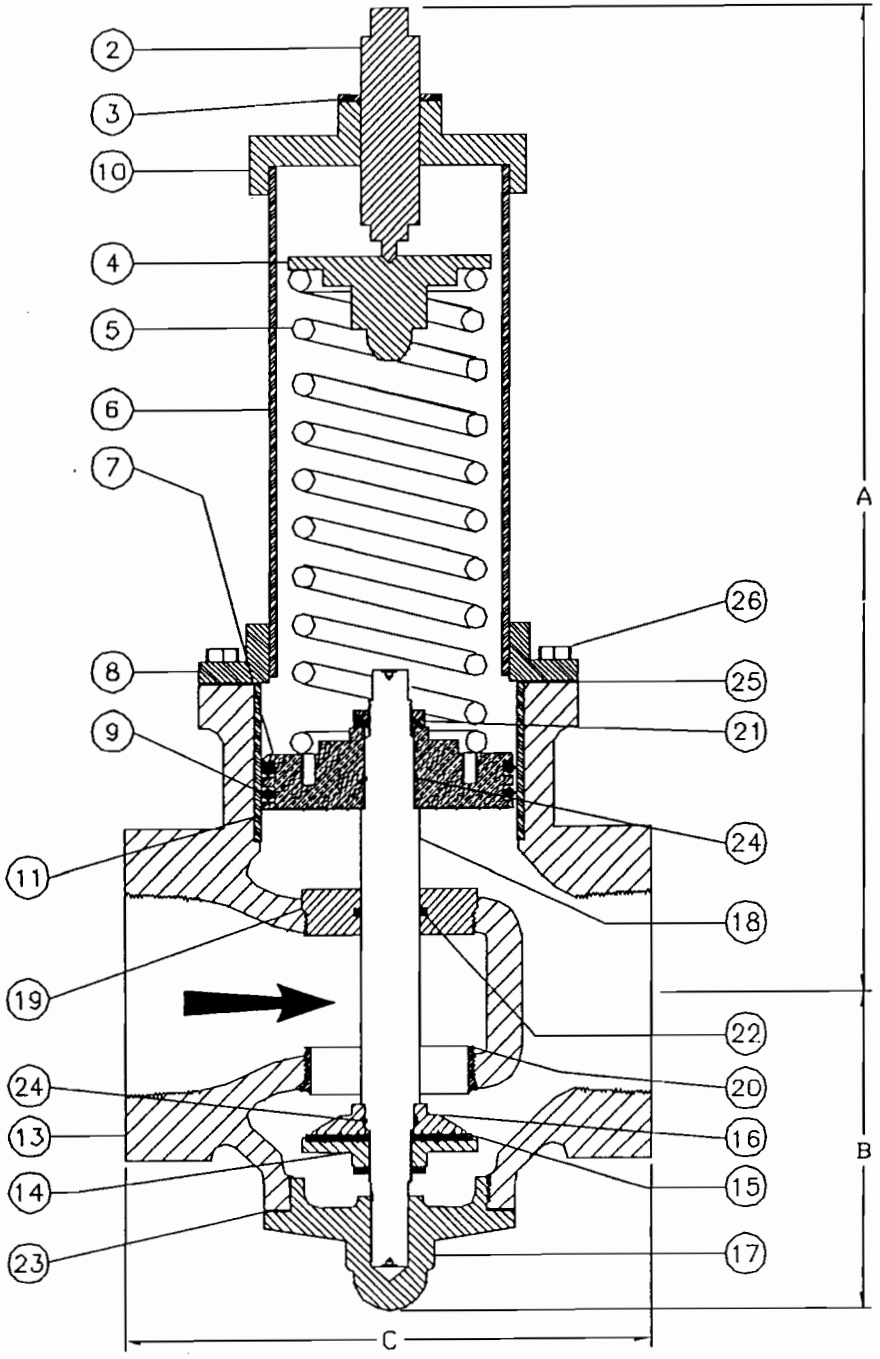

PART	DESCRIPTION	QTY	MATERIAL
2	ADJUSTING SCREW	1	BRONZE
3	LOCK NUT	1	BRONZE
4	SPRING WASHER	1	CAST IRON
5	SPRING(S)	VARY	STEEL
6	SPRING CHAMBER	1	BRONZE
7	PISTON	1	BRONZE
8	SPRING CHAMBER BASE	1	BRONZE
9	PISTON O-RING	2	BUNA-N
10	SPRING CHAMBER CAP	1	BRONZE
11	BUSHING	1	AMALGA
13	SHELL	1	CAST IRON
14	SEAT PACKING NUT	1	BRONZE
15	SEAT PACKING	1	POLYURETHANE
16	SEAT FOLLOWER	1	BRONZE
17	BOTTOM CAP	1	BRONZE
18	STEM	1	BRONZE
19	STEM GUIDE	1	BRONZE
20	SEAT RING	1	BRONZE
21	STEM LOCK NUTS	3	BRONZE
22	STEM GUIDE O-RING	1	BUNA-N
23	BOTTOM CAP GASKET	1	COMPOSITION
24	STEM O-RING	2	BUNA-N
25	COVER GASKET	1	COMPOSITION
26	BOLT - SPRING CHAMBER	VARY	BRONZE

VALVE SIZE	DIMENSIONS		
	A	B	C
2"	15	4	7-1/2
2-1/2"	18-1/4	5	8-7/8
3"	18-1/4	5	8-7/8

ROSS VALVE Mfg. Co. Inc.
6 OAKWOOD AVENUE - TROY, NEW YORK, 12180 - TEL. (518) 274 0961
POST OFFICE BOX 595 - TROY, NEW YORK, 12181 - FAX (518) 274 0210
WEBSITE: www.rossvalve.com - E-MAIL: sales@rossvalve.com

DRAWING 98EP-SCR		DATE 11/8/00 RJC
NO SCALE		

Model 98EP
DIRECT ACTING PRESSURE REDUCING VALVE
WITH FNPT CONNECTIONS

PRESSURE REDUCING VALVE

Operation **Model Number: 98EP**

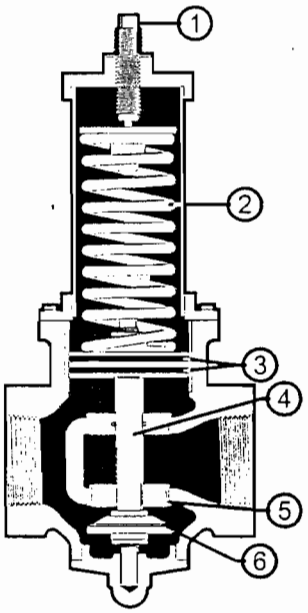

PARTS	
1	Adjusting Screw
2	Adjusting Spring
3	O-Rings
4	Stem
5	Seat Ring
6	Seat Packing

Control Unit

A straight forward control mechanism can be adjusted as pressure requirements change.

1. A diaphragm, connected to a stem is held in balance by a spring load on its top side and downstream water pressure underneath.
2. Seat packing against a seat ring, connected to the same stem - Holds back the high inlet pressure.

Operation

Because of it's fundamental, but sophisticated design, the valve can reduce a high water pressure to a lower pre-determined pressure regardless of flows.

1. When downstream (user) pressure increases, the
   a. Water pressure builds up beneath the diaphragm, pushes it up (as the springs above it contract.)
   b. Seat packing, which is connected to the diaphragm by a stem, also moves up.
   c. Valve throttles, decreasing the amount of water it lets flow through.
2. When downstream (user) pressure decreases, the
   a. Springs above the diaphragm, encountering decreased resistance, push the diaphragm down.
   b. Seat packing, also moves down.
   c. Valve opens wider, increasing the amount of water it lets flow through.

Recommendation for 40WR Installation

When a wide range of flows is required, for a 40WR installation, this smaller 98EP valve can be installed on a parallel pipe as follows:

The 98EP valve - Usually adjusted for a discharge pressure setting of 3 to 5 psi above the large valve setting, will handle the low flow requirements.

The large valve - Opens only when the demands exceed the small valve capacity and pressure drops to the large valve preset pressure.

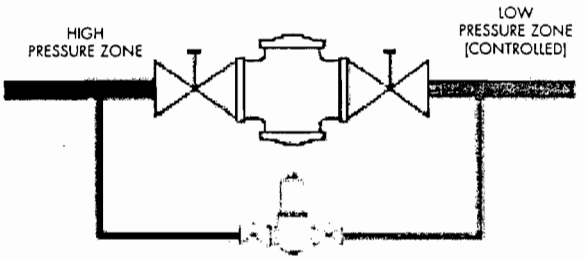

Benefits include:

1. **Reduces maintenance costs** on the larger, more expensive valve which result when the large valve operates at low flows.
2. Reduces noise which occurs when a large valve operates at low flows.
3. Avoids hunting action of a single large valve operating at low flows and the resulting pressure fluctuations.
4. Provides uninterrupted service while repacking one of the reducing valves.
5. Minimizes the effects of failure of a single large unit.

Cavitation

Cavitation may occur when 2 factors, a high pressure drop combined with a low outlet pressure, are present. Cavitation damage is caused by the collapse of the small cavities formed in the fluid stream during the sudden decrease in pressure. When the valve body or pipe walls confine the fluid stream and raise the pressure above the vapor pressure of the "bubbles", minute implosions occur resulting in extremely high impact forces. Where these implosions contact the valve parts, structural damage will result. If conditions for cavitation are expected, consult a Ross engineer.

(Operation continued on next page)

PRESSURE REDUCING VALVE

Specifications **Model Number: 98EP**

Basic Valve: Pressure Reducing (98EP)

The pressure reducing valve shall maintain a pre-adjusted downstream pressure regardless of changes in flow rate. Some drop in outlet pressure will occur as flow rate increases.

The pressure reducing valve shall be a direct acting type with a single seat.

The design of the valve shall be such that the inlet pressure is hydraulically balanced so that changes will not affect the outlet pressure.

The valve shall be ruggedly constructed with a size _____inch body and 125 lb./250 lb. flanged or screwed ends as shown in the drawings.

The valve shall be factory assembled.

Physical and Chemical Properties

The 125 lb. and 250 lb. flanged assemblies shall conform to ANSI standards for flange thickness and drilling and wall thickness of body and caps.

The valve shall be constructed of first class grey iron.

The grey iron shall be free from cold shuts, defective or spongy spots and conforming to ASTM specification A-126 Class B.

The bronze parts shall conform to ASTM specification B-62.

The diaphragm cover, button, washer shall be bronze.

The spring housing shall be bronze.

The spring chamber shall be bronze.

The stem shall be bronze.

The stem packing, bottom packing nuts shall be bronze.

The spool, spool guide shall be bronze.

The internal trim shall be bronze.

Test

The test before shipment may be witnessed by a representative of the Engineers for simulated field conditions.

Painting

All iron castings shall be coated on all sides with at least two coats of a rust inhibiting synthetic resin and asphaltum enamel.

Reference

The valve will be equal in all respects to the Model 98EP Pressure Reducing Valve as manufactured by the Ross Valve Mfg. Co., Inc., 6 Oakwood Ave., Troy, NY 12181.

NOTE: The Ross Valve Mfg. Co., Inc. reserves the right to modify valve construction which will result in equal or superior performance to existing designs. These modifications may be made at any time and at the sole discretion of the manufacturer.

Factory: Telephone (518) 274-0961
Fax (518) 274-0210

SERIES FC20 Pota-Pox (Fast Cure)

TECHNICAL DATA continued

STORAGE TEMPERATURE	Minimum 20°F (-7°C)	Maximum 110°F (43°C)
TEMPERATURE RESISTANCE	(Dry) Continuous 250°F (121°C)	Intermittent 275°F (135°C)
SHELF LIFE	24 months at recommended storage temperature.	
FLASH POINT - SETA	Part A: 82°F (28°C)	Part B: 64°F (18°C)
HEALTH & SAFETY	Paint products contain chemical ingredients which are considered hazardous. Read container label warning and Material Safety Data Sheet for important health and safety information prior to the use of this product. **Keep out of the reach of children.**	

APPLICATION

COVERAGE RATES*

	Primer			Intermediate / Topcoat		
	Dry Mils (Microns)	Wet Mils (Microns)	Sq Ft/Gal (m^2/Gal)	Dry Mils (Microns)	Wet Mils (Microns)	Sq Ft/Gal (m^2/Gal)
Suggested (1)	4.0 (100)	7.0 (180)	232 (21.6)	5.0 (125)	8.5 (215)	186 (17.3)
Minimum	3.0 (75)	5.0 (125)	310 (28.8)	4.0 (100)	7.0 (180)	232 (21.6)
Maximum	5.0 (125)	8.5 (215)	186 (17.3)	6.0 (150)	10.5 (265)	155 (14.4)

(1) Note: Roller or brush application requires two or more coats to obtain recommended film thickness. Allow for overspray and surface irregularities. Film thickness is rounded to the nearest 0.5 mil or 5 microns. Application of coating below minimum or above maximum recommended dry film thicknesses may adversely affect coating performance.

MIXING — Power mix contents of each container, making sure no pigment remains on the bottom. Pour a measured amount of Part B into a clean container large enough to hold both components. Add an equal volume of Part A to Part B while under agitation. Continue agitation until the two components are thoroughly mixed. Do not use mixed material beyond pot life limits. **Note:** Both components should be above 50°F (10°C) prior to mixing. For application to surfaces between 35°F to 50°F (2°C to 10°C), allow mixed material to stand thirty (30) minutes and restir before using. For optimum application properties, blended components should be above 60°F (16°C).

POT LIFE — 16 hours at 35°F (2°C) 2 hours at 77°F (25°C) 1/2 hour at 100°F (38°C)

THINNING — Use No. 4 Thinner. For air spray, thin up to 10% or ¾ pint (380 mL) per gallon. For airless spray, roller or brush, thin up to 5% or ¼ pint (190 mL) per gallon. **Caution:** Series FC20 NSF certification is based on thinning with No. 4 Thinner. Use of any other thinner voids ANSI/NSF Std. 61 certification.

SURFACE TEMPERATURE — Minimum 35°F (2°C) Maximum 135°F (57°C) The surface should be dry and at least 5°F (3°C) above the dew point. Coating won't cure below minimum surface temperature.

APPLICATION EQUIPMENT

Air Spray

Gun	Fluid Tip	Air Cap	Air Hose ID	Mat'l Hose ID	Atomizing Pressure	Pot Pressure
DeVilbiss MBC or JGA	E	765 or 78	5/16" or 3/8" (7.9 or 9.5 mm)	3/8" or 1/2" (9.5 or 12.7 mm)	75-100 psi (5.2-6.9 bar)	10-20 psi (0.7-1.4 bar)

Low temperatures or longer hoses require higher pot pressure.

Airless Spray

Tip Orifice	Atomizing Pressure	Mat'l Hose ID	Manifold Filter
0.015"-0.019" (380-485 microns)	1800-3000 psi (124-207 bar)	1/4" or 3/8" (6.4 or 9.5 mm)	60 mesh (250 microns)

Use appropriate tip/atomizing pressure for equipment, applicator technique and weather conditions.
Plural Component Spray: Contact your Tnemec representative or Tnemec Technical Services.
Roller: Roller application optional when environmental restrictions do not allow spraying. Use 3/8" or 1/2" (9.5 mm or 12.7 mm) synthetic nap covers.
Brush: Recommended for small areas only. Use high quality natural or synthetic bristle brushes.

CLEANUP — Flush and clean all equipment immediately after use with the recommended thinner or MEK.

*Values may vary with color.

WARRANTY & LIMITATION OF SELLER'S LIABILITY: Tnemec Company, Inc. warrants only that its coatings represented herein meet the formulation standards of Tnemec Company, Inc.
THE WARRANTY DESCRIBED IN THE ABOVE PARAGRAPH SHALL BE IN LIEU OF ANY OTHER WARRANTY, EXPRESSED OR IMPLIED, INCLUDING BUT NOT LIMITED TO, ANY IMPLIED WARRANTY OF MERCHANTABILITY OR FITNESS FOR A PARTICULAR PURPOSE. THERE ARE NO WARRANTIES THAT EXTEND BEYOND THE DESCRIPTION ON THE FACE HEREOF. The buyer's sole and exclusive remedy against Tnemec Company, Inc. shall be for replacement of the product in the event a defective condition of the product should be found to exist and the exclusive remedy shall not have failed its essential purpose as long as Tnemec is willing to provide comparable replacement product to the buyer. NO OTHER REMEDY (INCLUDING, BUT NOT LIMITED TO, INCIDENTAL OR CONSEQUENTIAL DAMAGES FOR LOST PROFITS, LOST SALES, INJURY TO PERSON OR PROPERTY, ENVIRONMENTAL INJURIES OR ANY OTHER INCIDENTAL OR CONSEQUENTIAL LOSS) SHALL BE AVAILABLE TO THE BUYER. Technical and application information herein is provided for the purpose of establishing a general profile of the coating and proper coating application procedures. Test performance results were obtained in a controlled environment and Tnemec Company makes no claim that these tests or any other tests, accurately represent all environments. As application, environmental and design factors can vary significantly, due care should be exercised in the selection and use of the coating. FOR INDUSTRIAL USE ONLY.

Support Services – Ross Valve provides personal service in every phase of development, installation, and maintenance. Services include:

DEDICATED SUPPORT LINES

- Sales engineers available Monday through Friday, 6 a.m. to 5:30 p.m. to help you with any questions — (518) 274-0961
- Fax machine — (518) 274-0210
- After hours phone/fax line — (518) 279-4373
- E-Mail — rossvalve@aol.com

Service after sale — We are always available to provide answers to any questions, or provide technical assistance. No sale is ever "final" — we continue to work with you, until you are 100% satisfied with your valve.

TRAINING

Factory Training — Ross Valve believes that our customers should know as much as possible about our products. That is why we periodically host Customer Training seminars at our facility in Troy, New York. Here, our customers learn the workings of the valves, how to correctly maintain them, and how they are manufactured.

In addition, Ross representatives are often in the field giving product seminars for your convenience.

WARRANTY

All valves and materials are guaranteed free from defects for 1 year from the date shipped.

FIELD SERVICE

When a repair, upgrade, or modification is required for an existing Ross Valve, factory-trained Ross Service Technicians offer the best service available, including:

- On-site/hands-on training for your staff.
- Trouble shooting expertise for our valves and your entire system.
- Technical assistance for start-up or continuing training.
- Fully inventoried service vehicles to allow replacement of necessary parts.
- Ability to return older valves to "like-new" condition.
- Confined Space/OSHA Trained.

MAINTENANCE

Ross Valves are economically rebuilt. Every internal part is replaceable through the top of the valve, without removing it from the line. All seals and packings are replaceable, which contributes to the valve's longevity.

Ross Valve stocks a wide variety of repair parts which can be received by the customer as early as the next day. In-house computer links track packages to ensure timely delivery.

Detailed historical record keeping gives us a full report of all maintenance or upgrades that have been made on each valve. This allows us to evaluate performance in the past and maximize performance in the future.

ROSS VALVE MFG. CO., INC.

6 Oakwood Ave., P.O. Box 595, Troy, NY 12181, USA

Phone: (518) 274-0961 Fax: (518) 274-0210
After Hours: (518) 279-4373 E-Mail: sales@rossvalve.com
Website: www.rossvalve.com

PRESSURE REDUCING VALVE

INSTRUCTIONS

Installation - Operation - Inspection - Maintenance

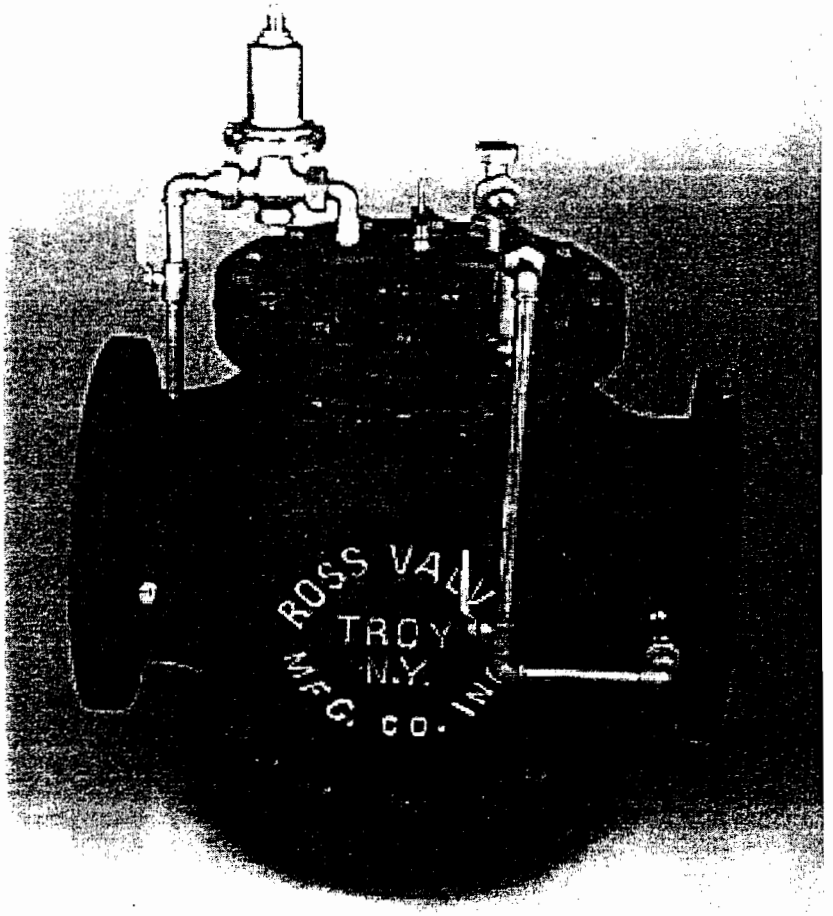

ROSS MODEL - 40WR-LD
Pressure Reducing Valve With Low Differential

GLOBE FLAT SEAT STYLE

L02208

ROSS VALVE Mfg. Co., Inc.

OAKWOOD AVENUE, TROY, NY 12180 - PHONE 518/274-0961 - FAX 518/274-0210

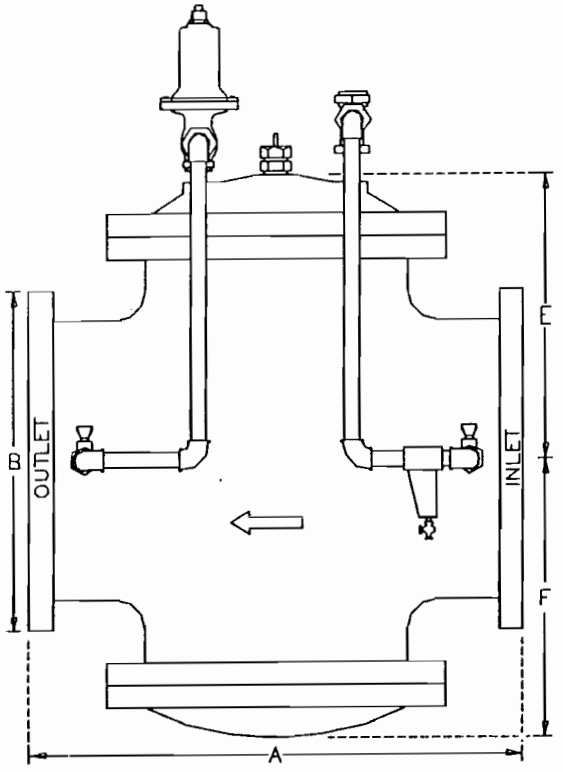

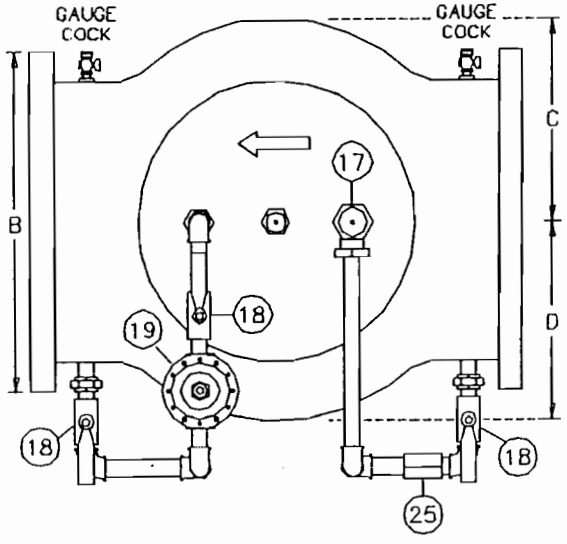

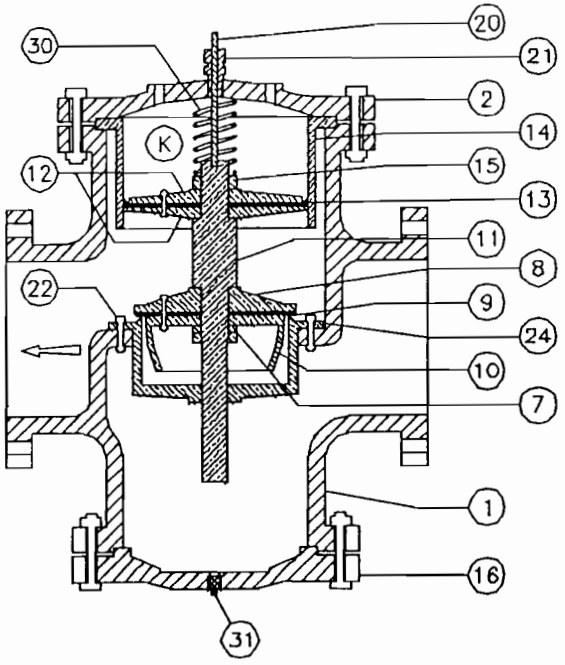

VALVE SIZE (IN)	ANSI B16.1 CLASS	SHIPPING WEIGHT (LBS)	DIMENSIONS (INCHES) A	B	C&D	E&F
4	125 250	235 275	14 14-5/8	9 10	4-3/4 4-3/4	7 7
6	125 250	375 430	17-3/4 17-3/4	11 12-1/2	6-5/8 6-5/8	9 9
8	125 250	690 750	24 24-13/16	13-1/2 15	8-3/4 8-3/4	12-1/2 12-1/2
10	125 250	920 1000	24-7/8 26-1/4	16 17-1/2	10 10	14-1/4 14-1/4
12	125 250	1375 1475	30 31-1/2	19 20-1/2	12 12	15-1/2 15-1/2
14	125 250	1770 1850	34-1/4 35-3/4	21 23	14 14	18 18
16	125 250	2400 2600	37-7/8 39-1/4	23-1/2 25-1/2	15 15	21-1/2 21-1/2
18	125 250	3300 3500	41-7/8 41-7/8	25 28	18-3/8 18-3/8	24 24
20	125 250	3550 3800	42-3/8 42-3/8	27-1/2 30-1/2	18-3/8 18-3/8	24 24
24	125 250	5200 5500	47 47	32 36	20 20	25 25
30	125 250	9800 10800	63-3/4 65-1/16	38-3/4 43	26-1/4 26-1/4	34 34
36	125 250	11800 12800	65 65	46 50	26-1/4 26-1/4	34 34

PART	DESCRIPTION	QTY.	MATERIAL
1	VALVE SHELL	1	CAST IRON
2	TOP CAP	1	CAST IRON
7	STEM NUT	1	BRONZE
8	SEAT DISC	1	BRONZE
9	SEAT PACKING	1	POLYURETHANE
10	SEAT PACKING SUPPORT	1	BRONZE
11	STEM	1	BRONZE
12	MAIN CUP PLATES (SET OF 2)	1	BRONZE
13	MAIN CUP PACKING	1	LEATHER
14	MAIN BUSHING	1	BRONZE/TEFLON
15	TOP STEM NUT	1	BRONZE
16	BOTTOM CAP	1	CAST IRON
17	NEEDLE VALVE	1	BRONZE
18	ISOLATION VALVE	3	BRONZE
19	PILOT VALVE – PRESSURE REDUCING	1	BRONZE
20	INDICATOR ROD	1	BRONZE
21	INDICATOR STUFFING BOX	1	BRONZE
22	BOLTS & NUTS (SEAT RING)	VARY	BRONZE
24	SEAT RING & STEM GUIDE	1	BRONZE
25	STRAINER	1	BRONZE/STAINLESS
30	SPRING	1	STAINLESS
31	PLUG	1	CAST IRON
	BOLTS & NUTS (TOP & BOTTOM CAP)	VARY	STEEL
	BOLTS & NUTS (CUP PLATES)	VARY	BRONZE
	INDICATOR ROD PACKING (SET)	1	TEFLON
	COVER & MAIN BUSHING GASKETS	3	COMPOSITION
	STEM GASKETS	2	COMPOSITION
K	EXPANDED OPERATING CHAMBER		

ROSS VALVE Mfg. Co, Inc.
6 OAKWOOD AVENUE - TROY, NEW YORK, 12180 - TEL. (518) 274 0961
POST OFFICE BOX 595 - TROY, NEW YORK, 12181 - FAX (518) 274 0210
WEBSITE: www.rossvalve.com - E-MAIL: sales@rossvalve.com

DRAWING 40WR-LD		DATE 3/10/00 RJC
GLOBE BODY 4" – 36"	NO SCALE	FIGURE 1

Model 40WR-LD
PRESSURE REDUCING VALVE
WITH LOW DIFFERENTIAL DESIGN

PART	DESCRIPTION	QTY.	MATERIAL	
3	REGULATING SCREW	1	BRONZE	
4	LOCK NUT	1	BRONZE	
5	SPRING CHAMBER	1	BRONZE	
6	TOP SPRING WASHER	1	BRONZE	
7	SPRING(S)	VARY	STEEL	
8	BOTTOM SPRING WASH (OPT.)	1	BRONZE	
9	DIAPHRAGM BUTTON	1	BRONZE	
10	DIAPHRAGM(S)	VARY	BRONZE	*
11	BOLTS & NUTS - CHAMBER	VARY	BRONZE	
12	DIAPHRAGM NUT	1	BRONZE	
13	STEM NUT	1	BRONZE	
14	O-RING - THIMBLE	1	BUNA-N	*
15	THIMBLE	1	BRONZE	
16	SEAT PACKING	1	POLYURETHANE	*
17	VALVE SHELL	1	BRONZE	
18	VALVE STEM	1	BRONZE	
19	LINK NUT	1	BRONZE	
20	LOCK NUT	1	BRONZE	
21	BOTTOM CAP	1	BRONZE	
22	STEM - DIAPHRAGM	1	STAINLESS STEEL	
23	GASKET - BOTTOM CAP	1	COMPOSITION	*
24	GASKET - DIAPHRAGM	1	COMPOSITION	*
25	O-RING - LOCKNUT	1	BUNA-N	

* - THESE PARTS ARE SUPPLIED IN A STANDARD REPAIR KIT

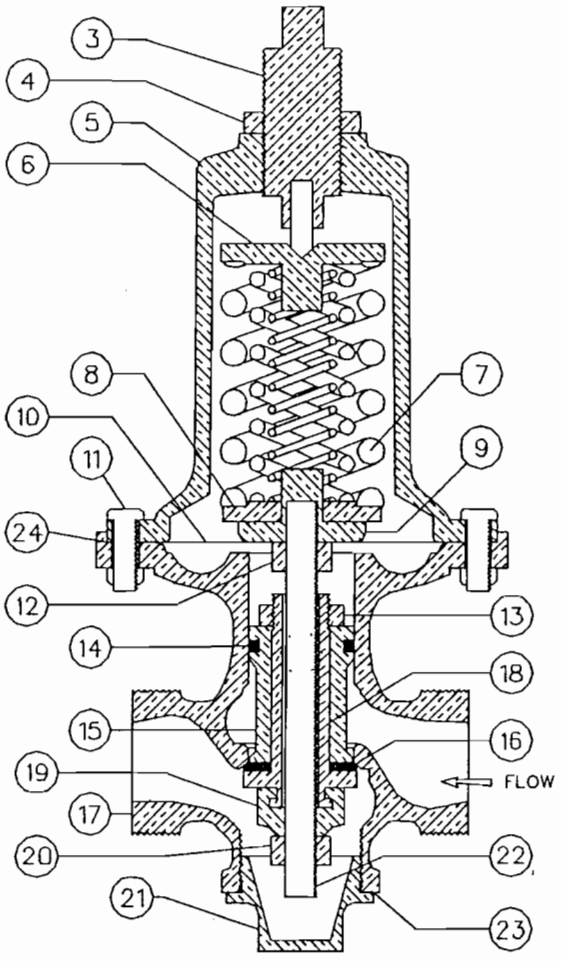

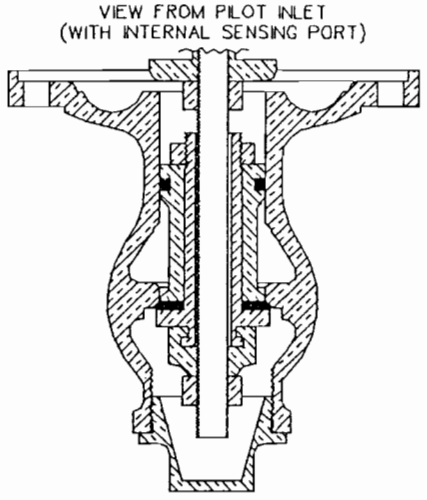

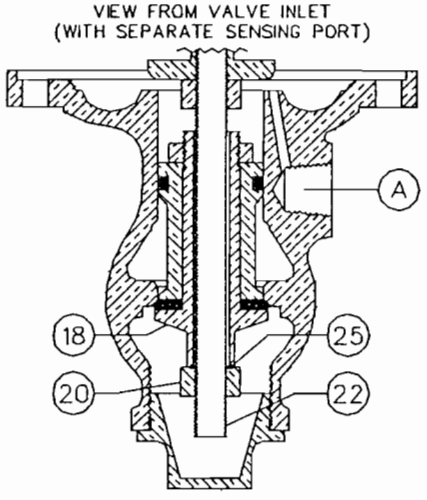

A - STATIC SENSING CONNECTION UNDER DIAPHRAGM TO REMOTE OUTLET PRESSURE SOURCE

The purpose of a pilot valve is to control the opening and closing of the main valve by trapping or releasing water from the main valve's "operating chamber" ("K" - the chamber above the main valve piston). The **Model 40WR Pressure Reducing Pilot Valve** uses this logic in order to maintain a constant pressure downstream of the main valve.

The pilot valve operates by creating a pressure balance across the diaphragms (#10). Pressure above the diaphragms is set by the regulating screw (#3) acting on the adjusting springs (#7). Pressure beneath the diaphragms is exerted hydraulically in one of two manners:

1 - A sensing port through the stem (#18) to the outlet throat of the pilot valve, or

2 - A separate sensing port directly under the diaphragms, from a remote outlet pressure source.

When the pilot valve senses a low outlet pressure, the force of the springs (#7) causes the entire stem assembly to move down. This pushes the seat packing (#16) away from the seat, allowing water to escape from the main valve operating chamber. This causes the piston of the main valve to open, resulting in an increase in the downstream pressure.

Once the downstream pressure rises above the setting of the springs (#7), the hydraulic force overcomes the spring force and the stem assembly is pushed upwards. This causes the pilot seat to seal off, trapping water in the main valve operating chamber (with water still entering through the inlet line). This causes the piston of the main valve to close, resulting in a decrease in the outlet pressure.

This opening and closing sequence (commonly referred to as "throttling") is continuously taking place in order to maintain a constant outlet pressure.

ROSS VALVE Mfg. Co. Inc.
6 OAKWOOD AVENUE - P.O. BOX 595 - TROY, NEW YORK, 12181 - TEL. (518) 274 0961

NO SCALE	DRAWING 40WR PILOT
DATE 4-2-63 2851/2	REVISED 9-24-99 S.M.

MODEL 40WR PILOT VALVE
PRESSURE REDUCING

FILE: P40WR

NEEDLE VALVE

Sizes: One size fits all piston valves
Primarily Controlled By: Manually adjusted
Located: On external control circuit of the main valve
Purpose: To limit flow in and out of the operating chamber
Standard Shipped Adjustment:
Coarse Needle: 5/6 to 2 turns off the seat
Fine Needle: Based on individual specifications

Option

Two separate needle valves on one main valve - Provide independent control of opening and closing speeds.

Basic Application

Limit maximum flow through external piping.

Adjustment

To adjust needle valve, which can be done without shutting down the main valve,
1. Remove the hex cap.
2. With a screw driver:
   a. turn the needle counter clockwise to raise it.
   b. turn the needle clockwise to lower it.

Recommendation

It is advisable to occasionally remove the cap and lock and change the position of the needle momentarily to insure against gradual plugging.

Note

Once the optimum position is determined, no further adjustment of the needle should be required. The hex cap can be removed under pressure and the needle valve adjusted with a screw driver.

ROSS ADVANTAGE

The needle valve's sturdy construction and simple design insure reliable control of flow.

Design

Within the shell there is a stationary "needle shaped" stem which:
1. Extends into a narrowed opening (seat) which is part of the water flow route.
2. For about half its length consistently increases its width from a very narrow bottom tip.

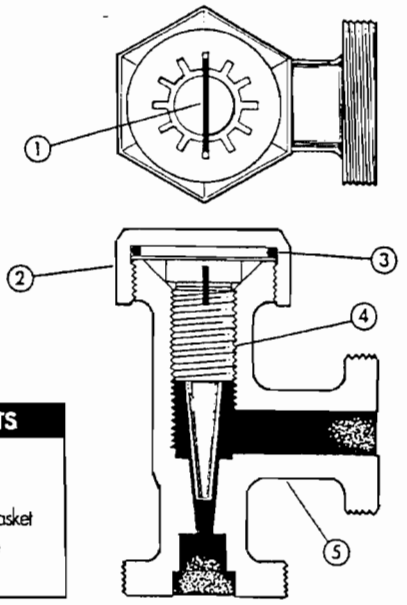

PARTS
1 Lock
2 Cap
3 Cap Gasket
4 Needle
5 Body

Operation

The simple construction reliably limits maximum flow through the external piping, depending on the adjustable stem position.
1. When the stem is adjusted to a raised position,
   a. More water can pass through the needle valve.
   b. Water enters (leaves) the operating chamber more quickly.
   c. The operating chamber fills up (empties out) more quickly.
   d. The main valve piston moves up and down more quickly.
2. When the stem is adjusted to a lowered position,
   a. Less water can pass through the needle valve.
   b. Water enters (leaves) the operating chamber more slowly.
   c. The operating chamber fills up (empties out) more slowly.
   d. The main valve piston moves up and down more slowly.

DIMENSIONS

Globe Body Minimum Clearances — Piston Valve Sizes: 4" - 36"

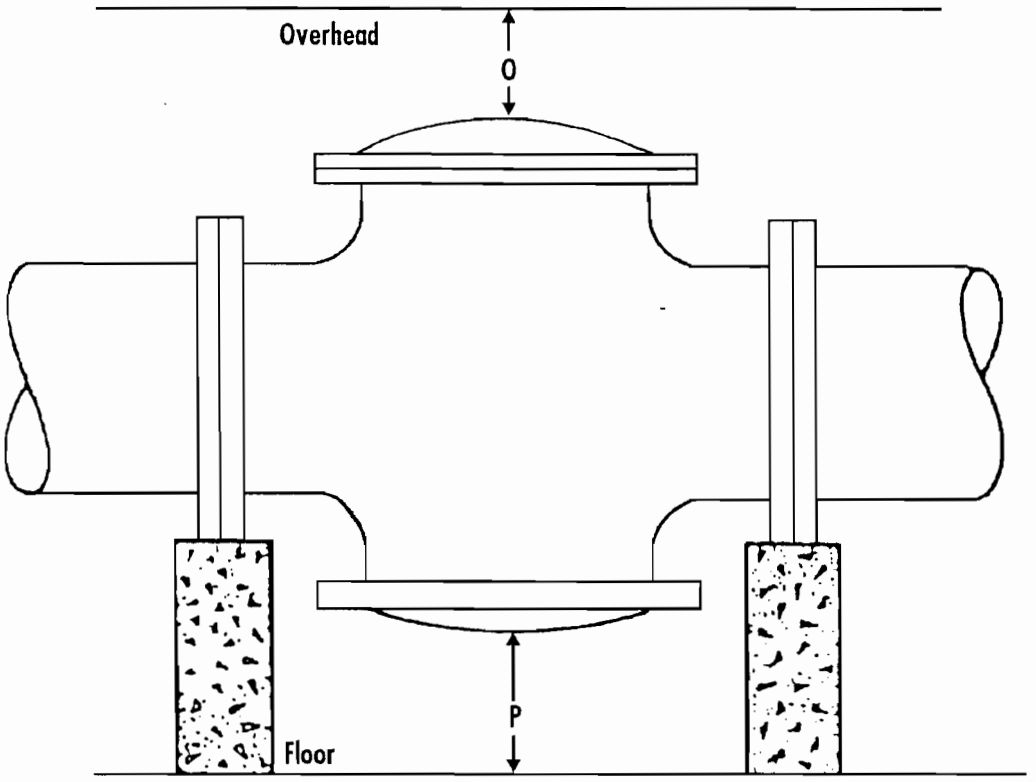

Size (Inches)	4"	6"	8"	10"	12"	14"	16"	18"	20"	24"	30"	36"
O	14	16	18	21	23	28	28	33	33	36	43	46
P	4 1/2	5 1/2	6 1/2	1	1	1	1	1	1	1	1	1

Note

1. Dimension "O" is clearance for removal of the top cap and piston for repacking the main valve. Additional working space for the convenience of the service man should be considered above as well as around the valve.
2. Dimension "P" as listed is the desirable clearance under the valve for removal of the STANDARD bottom cap. This dimension may be reduced to 1 inch for all valves on special applications.

Note

A. **Do not obstruct vent hole located at the center of the bottom cap.**
B. Consideration should be given for installation of valves 14" or larger under manhole in the roof of the valve vault or for additional clearance above the valve since a mechanical hoist will probably be required for removal of the piston. An eye bolt or hook cast in the cover slab over the center of the valve is useful.
C. If clearance under the valve is limited, dimensions "O" and "P" can be modified. Consult the factory concerning special applications.

ROSS PISTON VALVE
WITH LOW DIFFERENTIAL DESIGN

INSTALLATION

SHIPMENT:

The valve is tagged with all necessary identification marks before shipment. Each valve is thoroughly tested and pre-adjusted at the factory to expected field conditions.

STORAGE:

If necessary to store the valve before installation, it should be protected from the elements. Inside storage is recommended. If this is not possible, the valve should be protected from dirt, heat, freezing, and direct sunlight. If extended storage is anticipated, the valve should be placed with the piston in the vertical plane (all valves are shipped in this orientation).

MAIN VALVE INSTALLATION:

1. If possible, flush line before inserting valve.

2. Place valve in line with flange marked `inlet' towards the supply source.

3. If external piping and controls are not attached to valve when shipped, connect unions identified with numbered tags.

4. Attach 1/4" gauge cocks to body taps on back side of valve.

5. Allow enough clearance above the valve for piston removal. Be sure arrow on hydraulic pilot body points *away* from the top cap and *towards* the downstream body connection.

STARTING OPERATION:

1. Close isolation ball valve (18) in control piping.

2. Open the main line gate valve (if installed) on the discharge (downstream) side of the valve. This prevents trapping high inlet pressure under the pilot diaphragm.

3. Open main line gate valve (if installed) on the high pressure or inlet side of the valve *slowly*.

4. Open isolation ball valve (18) in control piping.

It may be necessary to create line pressure at the valve artificially during start-up. This may be done by partially closing the main line gate valve on valve discharge if so equipped. In other cases, it may be necessary to apply pressure to the valve indicator rod with a wrench handle or block of wood until the valve operating chamber is pressurized. Loosening the union of the control piping on the top cap side of the hydraulic pilot will help bleed air and give a positive indication when the operating chamber is full.

ROSS GLOBE VALVE

INSPECTION - SERVICE RECORD

VALVE LOCATION/I.D. _____

SIZE _____ MODEL _____ SERIAL NO. _____

VALVE - OPEN ☐ CLOSED ☐ INDICATOR ROD EXPOSED __ INCHES ABOVE STUFFING BOX CAP

MAIN VALVE OPERATED MANUALLY YES ☐ . . . NO ☐

OPERATING PRESSURES - INLET (SUPPLY)_____ OUTLET (DOWNSTREAM) _____

EXTERNAL LEAKS	NONE	SLIGHT	MAJOR
. . . . . INDICATOR STUFFING BOX	☐	☐	☐
. . . . . BOTTOM CAP VENT HOLE	☐	☐	☐
. . . . . DIAPHRAGM VENT-HYDRAULIC PILOT	☐	☐	☐
. . . . . SOLENOID PILOT EXHAUST PORT	☐	☐	☐

OTHER CONDITIONS _____

STRAINER FLUSHED . . . . . YES ☐ . . . . . NO ☐

. . . . . SCREEN EXAMINED . YES ☐ . . . . . NO ☐ . . . . . CLEANED ONLY ☐

. . . . . SCREEN CONDITION GOOD ☐ . . . . . POOR ☐ . . . . . INSTALLED NEW SCREEN ☐

NEEDLE VALVE(S) (EXAMINE NEEDLE & SEAT FOR WEAR)

. . . . . OPENING CONTROL . CLEANED ☐ . . . . . ADJUSTED ☐ . . . . SET POINT _____

. . . . . CLOSING CONTROL . . . . . CLEANED ☐ . . . . . ADJUSTED ☐ . . . . SET POINT _____

HYDRAULIC PILOT ADJUSTED . . . . . NO ☐ . . . . . YES ☐ . . . . _____ TURNS

. . . . . CLOCKWISE ☐ . . COUNTER-CLOCKWISE ☐ . . . . SET POINT _____

. . . . . REBUILT . . . . AT FACTORY DATE _____ . IN FIELD DATE _____

. . . . . NEW HYDRAULIC PILOT REPLACEMENT . . . . . DATE _____

SOLENOID - COIL TESTED . . . . . NO ☐ . . . . . YES ☐ . . . . . REPLACED ☐

. . . . . SEATS - INSPECT & CLEAN _____

. . . . . REBUILT . . . . AT FACTORY DATE _____ . IN FIELD DATE _____

. . . . . NEW SOLENOID REPLACEMENT . . . . . DATE _____

MAIN VALVE INTERNAL CONDITION -

. . . . . MAIN CYLINDER (14) _____

. . . . . BOTTOM CAP CYLINDER (23) _____

. . . . . SEAT DISC/SUPPORT/RING _____

. . . . . BODY TAP CONNECTIONS _____

. . . . . MAIN VALVE REPACKED _____ DATE _____

ACTION RECOMMENDED _____

_____

REPORT BY _____ DATE _____

ROSS VALVE MFG. CO., INC., TROY, NY 12180 · PHONE 518/274-0961 · FAX 518/274-0210

REPAIR INSTRUCTIONS - GLOBE BODY VALVES

When entering a valve pit to inspect a valve, all regulations regarding Confined Space Entry should be observed.

So some recommendation may guide the operator, we suggest periodic inspections in order to check for proper valve operating pressures as well as any visual leaks. Should the operator encounter any external leakage or find any abnormalities in the operating pressures which appear to be caused by the valve, the valve should be scheduled for service.

A reliable indication of internal packing condition can be obtained by observing any leakage from the vent hole in the center of the bottom cap. When leakage becomes significant, packing replacement should be made. As a general statement, the overall average life of a set of packings is 7 to 10 years. This may vary considerably because of specific operating conditions.

After observing pressures and inspecting for external leakage, the flush cock on the strainer should be opened momentarily to remove accumulated material. The needle valve cap should be removed and the needle closed 1/2 turn, opened 1 full turn, and then closed 1/2 turn to its original position.

STEPS FOR INTERNAL REPAIRS:

All repairs and parts replacement may be made without removing the valve from the line. Internal repairs are made by removing the top cap of the valve. All internals are accessible through the top.

Shut inlet main line isolation valve, then shut outlet main line isolation valve. Open gauge cocks to de-pressurize the valve.

Remove indicator rod by inserting a nail through hole and unscrewing. Do not pull through stuffing box. Then remove top cap bolts and top cap. Be careful not to bend indicator rod.

In 8" and larger valves, withdraw piston by either removing two 3/8" bronze bolts in top stem nut and installing lifting device (horseshoe shaped piece of steel with two holes) over nut; or by looping a cable or nylon rope around these bolts. **Be sure lifting device is secure before removing piston.** In 4" and 6" valves, a threaded eyebolt should be screwed in the indicator rod hole.

Inspect both main bushing (Part No. 14) and bottom cylinder (Part No. 23) for mineral build-up or scoring. Smooth with emery or replace if necessary. Inspect seat ring for damage. Repair as necessary.

Secure main piston on a pipe threading stand (or lay piston on floor on rags or a similar cushioning material). Loosen top stem nut (Part No. 15) which holds the cup plate assembly. Remove cup plate bolts, nuts and copper washers on 8" cups and larger. Replace the leather cups (one faces up, one faces down). Re-install with new packings in the reverse order as outlined above.

Caution - The clamping bolts should be tight so that the packings are held securely and no leak occurs. Do not over-tighten so that the packing is deformed, however. All cup packings are impregnated with lubricants so that no external lubrication is necessary or desirable.

To replace the seat packing, it is necessary to determine if the valve is constructed with a "sliding" or a "flat" type seat. The sliding type seat has the seal or seat packing clamped in the valve body underneath the iron wall that separates the inlet and outlet valve chambers. It consists of a flanged packing held in place by a split bronze seat support ring. The lip of the packing "looks down" and care should be taken that the packing is concentric with the valve bore before the clamping bolts are tightened. In the "flat" type seat, the seat packing is located on the valve piston, where it is clamped between two plates and held by a stem nut (Part No. 7). Removal of this nut allows the plates to be separated and the packing replaced.

Replacement of the bottom cups (Part No. 5) is accomplished by removing the bottom stem lock nut (Part No. 6) and the flanged bottom guide nut (Part No. 3). Install the seals with the lip of both cups "looking up". Again, when re-assembling, be careful not to over tighten so that the cups are deformed.

Re-insert the piston being careful not to crimp the lower main cup when it enters the main bushing. The piston should move freely and drop of its own weight.

Replace the top cap and control piping (being sure to thread in the indicator rod), then restore water pressure. Be sure to open the discharge isolation valve first so that high inlet pressure is not trapped against a closed outlet valve.

All replaceable packings and gaskets are stock items and may be ordered as a repair kit for valve serial number _____. They are available for regular UPS delivery or next day service.

All spare parts are available from: Ross Valve Mfg. Co., Inc., 6 Oakwood Avenue, Troy, New York, 12180
Phone: (518) 274-0961, Fax: (518) 274-0210

Support Services – Ross Valve provides personal service in every phase of development, installation, and maintenance. Services include:

DEDICATED SUPPORT LINES

- Sales engineers available Monday through Friday, 6 a.m. to 5:30 p.m. to help you with any questions — (518) 274-0961
- Fax machine — (518) 274-0210
- After hours phone/fax line — (518) 279-4373
- E-Mail — rossvalve@aol.com

Service after sale — We are always available to provide answers to any questions, or provide technical assistance. No sale is ever "final" — we continue to work with you, until you are 100% satisfied with your valve.

TRAINING

Factory Training — Ross Valve believes that our customers should know as much as possible about our products. That is why we periodically host Customer Training seminars at our facility in Troy, New York. Here, our customers learn the workings of the valves, how to correctly maintain them, and how they are manufactured.

In addition, Ross representatives are often in the field giving product seminars for your convenience.

WARRANTY

All valves and materials are guaranteed free from defects for 1 year from the date shipped.

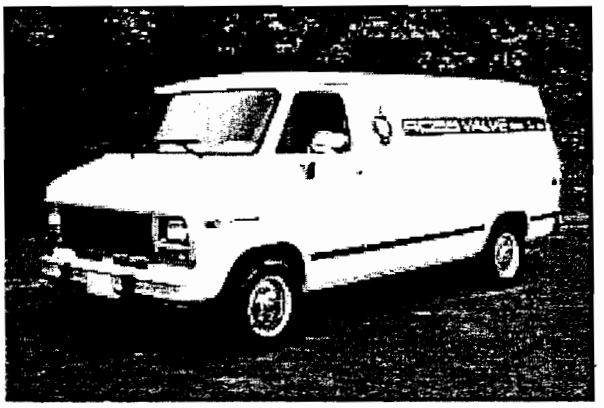

FIELD SERVICE

When a repair, upgrade, or modification is required for an existing Ross Valve, factory-trained Ross Service Technicians offer the best service available, including:

- On-site/hands-on training for your staff.
- Trouble shooting expertise for our valves and your entire system.
- Technical assistance for start-up or continuing training.
- Fully inventoried service vehicles to allow replacement of necessary parts.
- Ability to return older valves to "like-new" condition.
- Confined Space/OSHA Trained.

MAINTENANCE

Ross Valves are economically rebuilt. Every internal part is replaceable through the top of the valve, without removing it from the line. All seals and packings are replaceable, which contributes to the valve's longevity.

Ross Valve stocks a wide variety of repair parts which can be received by the customer as early as the next day. In-house computer links track packages to ensure timely delivery.

Detailed historical record keeping gives us a full report of all maintenance or upgrades that have been made on each valve. This allows us to evaluate performance in the past and maximize performance in the future.

ROSS VALVE MFG. CO. INC.

6 Oakwood Ave., P.O. Box 595, Troy, NY 12181, USA

Phone: (518) 274-0961 Fax: (518) 274-0210
After Hours: (518) 279-4373 E-Mail: sales@rossvalve.com
Website: www.rossvalve.com

FEBCO BACKFLOW PREVENTION

FEBCO

MASTER series®

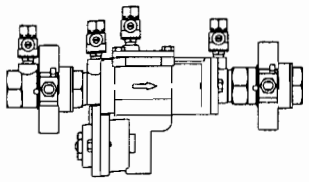

Model 860

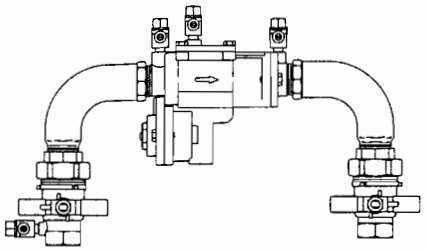

Model 880U
with Union Ends

OPERATIONS & MAINTENANCE

M A N U A L

Models 860/860U/880/880U

Reduced Pressure Assembly

1/2" through 2"

FEBCO® BACKFLOW PREVENTION

Performance at the lowest installed cost!

TABLE OF CONTENTS

Features and Operating Procedures 2

Vandalism 2

General Service Procedures 3

Cut-A-Way Drawing 3

Trouble Shooting Procedures 4-5

Check Module Disassembly 6

Check Module Seal Replacement 6

Check Module Re-Assembly 7

Relief Valve Repair 7-8

Testing 9

Air Gap Drain Installation Instructions 9

Exploded View 10

Parts List 11

Repair Kits 12-13

Freeze Protection 15

Warranty ..... Back Cover

FEATURES AND OPERATING PROCEDURES

The **FEBCO Reduced Pressure Backflow Preventer Assembly** consists of two independently operating, spring loaded check valves with a pressure differential relief valve located between the two checks. The pressure drop across the first check valve is approximately 7.0 PSID with no flow. The relief valve consists of a hydraulically balanced diaphragm with the high pressure side hydraulically connected to the upstream pressure zone. The relief valve remains closed during normal operation. The low pressure side of the diaphragm is spring loaded to force the relief valve open when the pressure drop across the first check and across the diaphragm reduced to approximately 3.0 PSID. A complete assembly includes two shut-off valves and four test cocks.

VANDALISM

If the unit is installed where vandalism may be a problem, the assembly should be protected and secured. On ½" through 2" units the handles of shut-off valves can be removed to discourage tampering.

A protective enclosure can be installed over the unit to discourage vandals. If an enclosure is used, it should be installed so that adequate clearance is available for maintenance and testing. Consult local codes before installing any type of protective enclosure.

GENERAL SERVICE PROCEDURES

1. FEBCO backflow prevention assemblies can be serviced with standard tools and are designed for ease of maintenance. The assemblies are designed to be serviced in line, so the unit should not need to be removed from the line during servicing. **NO special tools are required.**

   Suggested Tool Kit Model 860/880 (1/2" - 2")
   - 1 crescent wrench
   - 1 medium standard screw driver
   - Differential pressure test kit
   - 1 medium Phillips screw driver
   - Box/open end wrench

2. The most common cause of check fouling and relief valve discharge is dirt and debris in the seating areas. The line should be flushed clean of debris before installation of the assembly. To flush the line after installation of the assembly, slowly close the inlet shut-off valve, remove the cover and spring assemblies of both check valves and open the inlet shut-off valve to allow sufficient flow of water through the assembly to clear all sand, debris, etc. from the line. If debris in the water continues to cause fouling, a strainer may be installed upstream of the assembly (check local codes).

3. Rinse all parts with clean water before reassembly.

4. Carefully inspect diaphragms, seals, and seating surfaces for damage or debris. If the check valve seat disc has been severely cut at the seat ring diameter, the assembly has been subjected to extremely high and repeated back pressure. Either thermal water expansion or water hammer are the most likely causes. If back pressure persists, consider installation of a pressure relief valve downstream of the assembly.

5. Use caution to avoid damaging any guiding surfaces while handling parts. Do not force parts together. The o-ring seals used in FEBCO assemblies require only a small tightening force to insure a positive seal.

6. Test unit after servicing in accordance with locally approved test methods to insure proper operation (see page 9 for more details).

7. Refer to applicable exploded drawings and parts lists (pages 10-11) for visual aid information.

8. Use food grade petroleum jelly as a lubricant as instructed in this manual.

CUT-A-WAY DRAWING

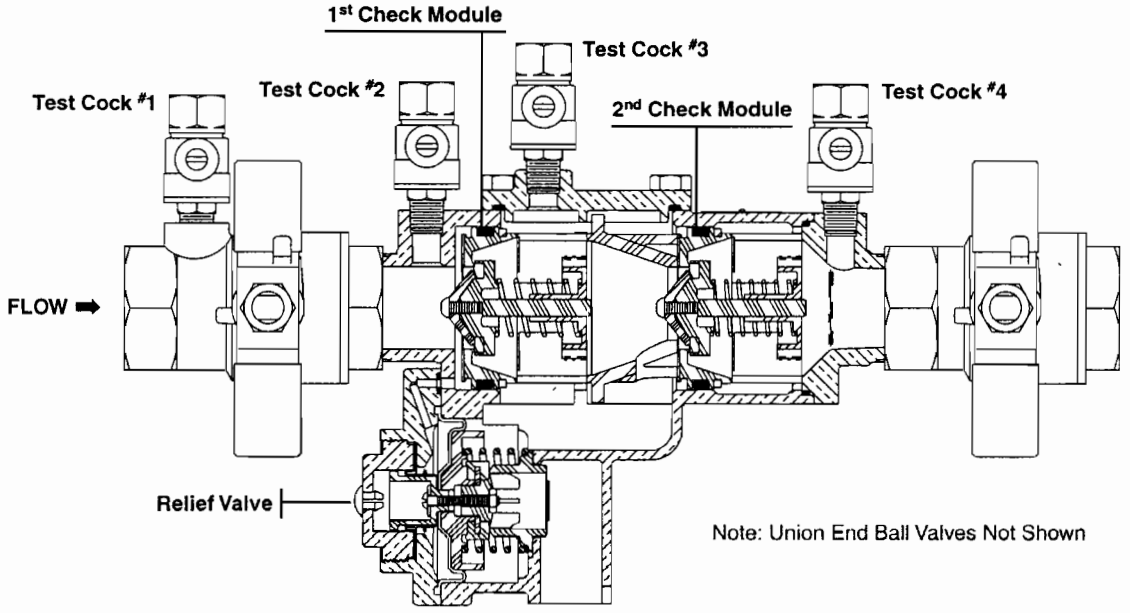

TROUBLE SHOOTING GUIDE

With Differential Pressure Gauge

Symptom #1:	Reading:	Problem:
Check Differential Across #1 Check Valve	2 to 3 PSID	Leak in #1 or #2 check valve
	6 to 8 PSID and steady	Malfunctioning pressure relief valve
	2 to 7 PSID and steady	Inlet pressure fluctuating

Symptom #2	Reading:	Problem:
Check Differential Across #1 Check Valve	2 to 3 PSID	#1 check valve held open
	6 to 8 PSID and steady	Malfunctioning pressure relief valve.

Without Differential Pressure Gauge

Symptom #1 and #2:	Result:	Problem:
A) Close Gate Valve #2	If discharge stops	Leak in #2 check valve
	If discharge does not stop	Go to "B"
	Result:	Problem:
B) Open #4 test cock to produce a flow greater than differential relief valve discharge.	If discharge stops	Leak in #1 check valve
	If discharge does not stop	Malfunctioning pressure relief valve

Symptom #1:	Cause:	Solution:
Continuous discharge from relief valve during NO FLOW conditions (Discharge stops with water flow). With this symptom, the pressure drop across the #1 check valve would be 2 to 3 PSID. If a flow of water (more than discharge) is created through the valve, the pressure drop should increase to approximately 7 PSI.	A. Debris fouling #1 check valve.	Inspect and clean
	B. Outlet pressure higher than inlet pressure and debris fouling #2 check valve.	Inspect and Clean
	C. Spring stem not moving freely.	Inspect for dirt or other foreign material
	D. Damaged seat or seat disc.	Inspect and replace. If necessary, seat disc can be reversed in 1/2" through 2" sizes.
	E. Leakage at check module o-ring.	Inspect and replace seal or o-ring.

Symptom #2	Cause:	Solution:
Intermittent discharge from relief valve during NO FLOW conditions. With the symptom, the pressure drop across the #1 check valve would be varying from about 2 to 7 PSID.	A. Inlet line pressure variations causing relief valve to discharge.	Eliminate or reduce pressure variations by installing a soft seated, spring loaded check on upstream side of device.
	B. Pressure surges (water hammer) causing relief valve to discharge as pressure wave passes through the zone.	Eliminate or reduce pressure surges

TROUBLE SHOOTING GUIDE - CONTINUED

Symptom #3	Cause:	Solution:
Continuous discharge from relief valve during FLOW and NO FLOW conditions. With this symptom, the pressure drop across the #1 check valve would be 7 PSID or more at all times.	A. Seat disc dislodged from cavity in the main stem (this can be caused by pressure surges during initial filling of system lines)	Reposition disc in main stem cavity. Repressurize system slowly.
	B. Debris fouling the relief valve seat	Inspect and clean.
	C. Debris blocking the relief valve sensing passage	Inspect and clean.
	D. Dirt or scale jamming main stem	Inspect and clean, or replace.
	E. Leakage at main stem	Inspect and clean, or replace.

Symptom #4	Cause:	Solution
Relief valve does not open above 2.0 PSID during field testing.	A. Outlet ball valve not closed completely.	Check for debris blocking ball valve.
	B. Plugged low pressure hydraulic passage (from "ZONE" to inner diaphragm).	Inspect and clean.
	C. Improper alignment of internal parts during reassembly (causing high resistance to movement).	Reassemble.
	D. Jammed main stem due to debris.	Clean.

Symptom #5:	Cause:	Solution:
First check pressure drop is low (less than 5 PSID) during field testing.	A. Debris fouling first check seat.	Inspect and clean.
	B. Debris fouling second seat with backpressure.	Inspect and clean.
	C. Inlet pressure variations causing inaccurate gauge reading.	Eliminate pressure variations. (see (symptom 2A).
	D. Damaged seat or seat disk.	Inspect and replace as required.
	E. Worn guide, bushing or stem.	Inspect and replace seal or o-ring.

Symptom #6	Cause:	Solution:
Second check fails to hold back pressure during field testing.	A. Outlet ball valve not closed completely.	Inspect and clean.
	B. Debris fouling second check seat.	Inspect and clean.
	C. Damaged seat or seat disk.	Inspect and replace if required.
	D. Worn guide, bushings or stem.	Inspect and replace if required.

CHECK MODULE DISASSEMBLY

1. Slowly close inlet and outlet ball valves. Bleed residual pressure by opening #2, #3, and #4 test cocks. Allow the test cocks to remain open until the reassembling is completed. Test cock #1 should remain closed.

2. Remove the cover bolts (item 21) using the appropriate size wrench.

3. Remove spacer (item 8) by grasping the flanged end of the spacer and pulling straight up.

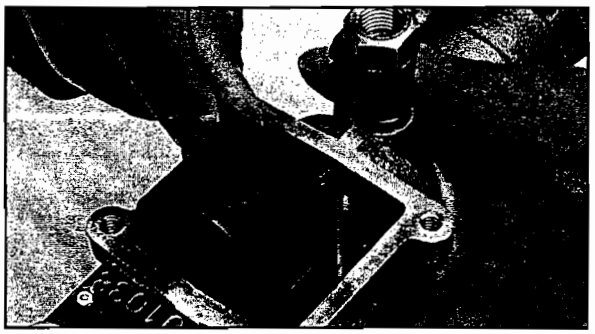

4. Remove the inlet check assembly by pulling it in the direction of flow out from the body bore until it is completely exposed then lift out of the body.

5. Remove the outlet check assembly by placing the tip of a medium size flat nose screw driver in the slot of the seat (item 3) and prying the check assembly back until the red o-ring (item 3.1) is exposed. Then, using your fingers, pull it out from the body bore until it is completely exposed then lift out of the body.

CHECK MODULE SEAL REPLACEMENT

Both check assemblies are disassembled and reassembled in the same manner. To service the checks you may replace the check modules with new ones by using check module assembly kits available from FEBCO. Or, you may also replace the rubber components in the check modules by using the replacement rubber parts kits available from FEBCO. For details on parts and kits please see pages 10 - 13.

1. To disassemble, grasp the seat section (item 3) in one hand and the guide section (item 7) in the other hand and then rotate in a counter clock wise direction (approx. 1/8 turn) until the two parts disengage.

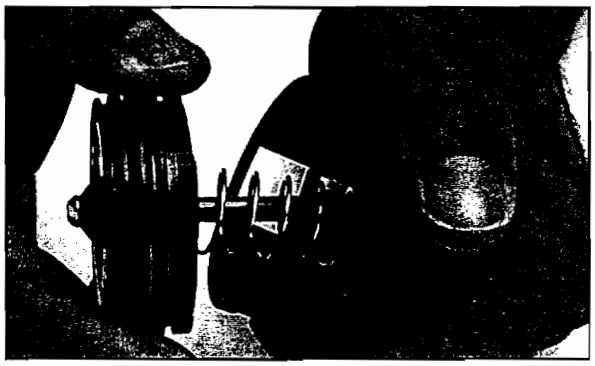

2. Remove retaining screw (item 5.2) and disc retainer (item 5.1) so the rubber disc is fully exposed. Carefully pry out the rubber disc from poppet. Be careful not to damage the poppet when removing the disc. Rinse poppet in clean water and replace the old rubber disc with new rubber disc. If the rubber disc is not damaged it can be reversed and reinstalled when a new disc is not available. Rinse all other internal components with clean water. Replace disc retainer and secure with retaining screw (item 5.2).

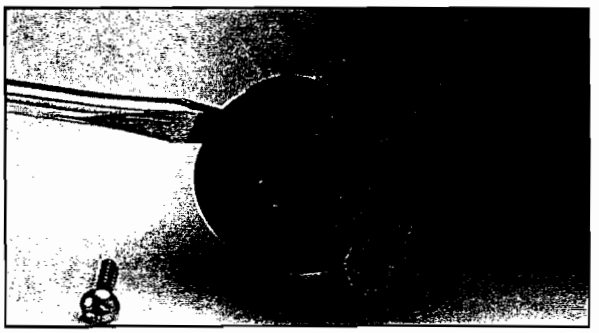

3. Reassemble check module in the reverse manner as indicated in above. When reassembling the check module be sure to insert the poppet stem into the guide hole and keep fingers clear of the slots in the module.

CHECK MODULE RE-ASSEMBLY

Use reverse procedure for assembly with the following special instructions.

1. Inspect the check module o-ring (item 3.1) for damage and replace if necessary. To ease assembly, apply a thin coating of FEBCO factory supplied petroleum jelly (food grade) to the o-ring (item 3.1) prior to installing in body. **CAUTION:** Excess lubricant may cause foreign debris to collect on internal components which could foul the check assembly and result in a test failure.

2. The word **INLET** is inscribed on the end of each module. That end should face the inlet of the valve.

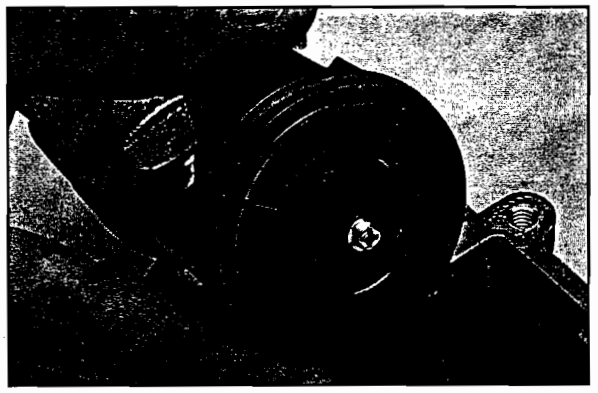

3. **On Reduced Pressure Assembly Model 860, make sure the check assembly with the heavy duty spring is inserted in the inlet bore of the body (1st check position). The check assembly with the weaker spring must be installed in the outlet bore of the body (2nd check position).**

4. When replacing spacer (item 8) between the two check assemblies be sure that the flanged end of the spacer is touching the back side of the inlet check assembly so that the cover will fit properly. Next, replace cover making sure #3 test cock is on the upstream side. Do not over tighten cover bolts (Approximately 35 inch-pounds is sufficient).

5. After reassembling, close test cock #2, #3 and #4 (test cock #1 should already be closed), slowly open inlet ball valve. Bleed air from the unit by opening and closing test cock #2, then #3 and finally #4. NOTE: During the bleeding process on the Reduced Pressure Assembly Model 860 the relief valve may discharge a high volume of water until all test cocks have been closed and pressure stabilized.

6. Check for external leaks and repair if necessary. Slowly open outlet ball valve.

7. Test assembly in accordance with the locally approved test methods.

RELIEF VALVE REPAIR

NOTE: Discharge from the relief valve assembly may not indicate a relief valve failure. The relief valve will discharge water when the mainline check valves become fouled with foreign debris. See Trouble Shooting Guide for more information **BEFORE** disassembling the relief valve.

1. Slowly close inlet and outlet ball valves. Bleed off air from the unit by opening and closing test cock #2, then #3, and finally #4. Test cock #1 should remain closed.

2. Loosen brass cylinder in center of relief valve cover (item 18) by unscrewing 1/4 turn (Counter-clockwise). Remove the relief valve cover bolts (item 21) and relief valve cover (item 19).

3. The internal relief valve assembly module will be attached to the relief valve cover. Unscrew the brass cylinder and remove from cover. Grasp the outer diameter of the large outer diaphragm (item 15) and pull away from the cover until the small outer diaphragm (item 16) comes out through the relief valve cover hole and is completely separated from the relief valve cover. Discard old internal relief valve assembly module. Remove the plastic slip rings (item 18.1) and discard. Slide out the seat ring (item 12) and seat gasket ring (item 12.1) from the relief valve body and discard.

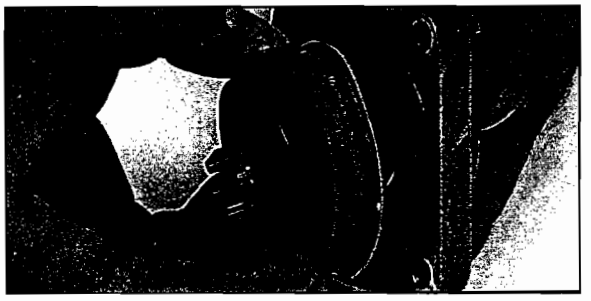

RELIEF VALVE REPAIR - CONTINUED

4. Apply a thin film of petroleum jelly (food grade), supplied in the repair kit to both sides of the new seat gasket ring (item 12.1) and slide it on the short end of the new seat ring (item 12). Slide the short end of the new seat ring into the hole of the relief valve body. (The adhesion from the lubricant will hold the seat ring in place during the rest of the assembly process.)

5. Before installing the new internal relief valve assembly module, apply a thin coating of petroleum jelly (food grade) to both sides one of the slip rings (item 18.1) and insert it into the top of the relief valve cover. Install the new internal relief valve assembly module by grasping the outside of the outer diaphragm in one hand and the smaller diaphragm in the other hand. Then pull upward gently on the small outer diaphragm (item 16) so that it forms the shape of a tulip. Hold the small diaphragm so that it maintains this "tulip" shape while sliding it through the relief valve cover hole and plastic diaphragm gasket.

6. Apply a thin coat of petroleum jelly (food grade) to both sides of the slip ring (item 18.1) and place it over the top of the small diaphragm making sure the outer diaphragm (item 16) is not folded or creased under the slip ring. Push the slip ring down flat until the adhesion from the grease holds the small diaphragm in place. Thread the brass cylinder (item 18) into the relief valve cover and hand tighten.

7. Replace o-ring (item 20) in relief valve cover. Make sure the round bead on the large diaphragm is properly seated in the counterbore of the relief valve cover. Position spring (item 13) over the seat ring in the relief valve body and hold in place while inserting the guide end (item 23) of the relief valve assembly module and relief valve cover. Position the assembly so the o-ring aligns with the sensing hole in the body and the guide slides into the seat ring. Replace relief valve cover bolts and tighten to approximately 35 inch pounds. **Do not over tighten**. Tighten the brass cylinder (item 18) in the relief valve cover to approximately 30 feet pounds of torque. **Do not over tighten**.

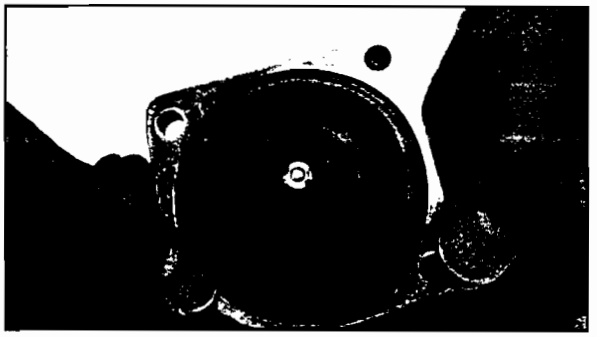

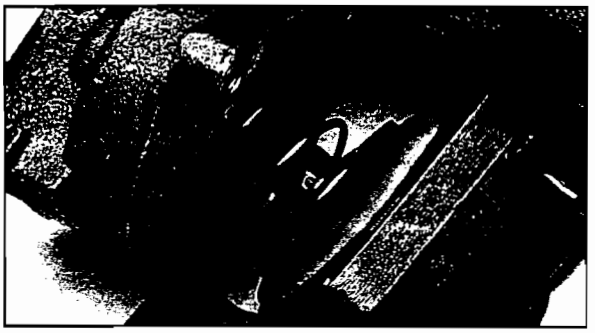

8. After reassembly, with all test cocks closed, slowly open inlet ball valve and bleed air from the unit by opening and closing test cock #2, then #3 and finally #4. NOTE: During the bleeding process the relief valve may discharge a high volume of water until all test cocks have been closed and pressure has been stabilized.

9. Check for external leaks and repair if necessary. Slowly open outlet ball valve.

10. Test assembly in accordance with the locally approved test method.

TESTING

All mechanical devices should be inspected on a regular basis to ensure they are working correctly. The assembly should be tested at time of initial installation, after servicing or maintenance, and at least annually thereafter. Acceptable test procedures are published by Foundation for Cross Connection Control and Hydraulic Research at the University of Southern California (USC), The American Water Works Association (AWWA), The American Society of Sanitary Engineering (ASSE Series 5000) and the Canadian Standards Association (CAN/CSA B64•10). Please consult the regulatory authority in your area for more specific information.

AIR GAP DRAIN INSTALLATION INSTRUCTIONS

1. Before installation check local codes. This type of drain may not be approved for use in some areas.

   CAUTION: This drain is intended to catch moderate relief valve discharges due to line pressure fluctuations and minor check valve fouling. Under certain conditions relief valves can discharge water at rates greater than the drain capacity.

2. If installed indoors, the assembly should be installed near a floor drain sized to adequately handle discharge.

3. After installation of backflow assembly and piping, attach drain funnel to relief as shown, using self tapping screws provided in kit to join drain funnel halves together, making sure that the slots in the drain funnel are located over tabs on relief valve port.

   NOTE: Discharge of drain funnel is a slip fit design. Drain funnel was not deigned to, nor is it able to support drainpipe weight.

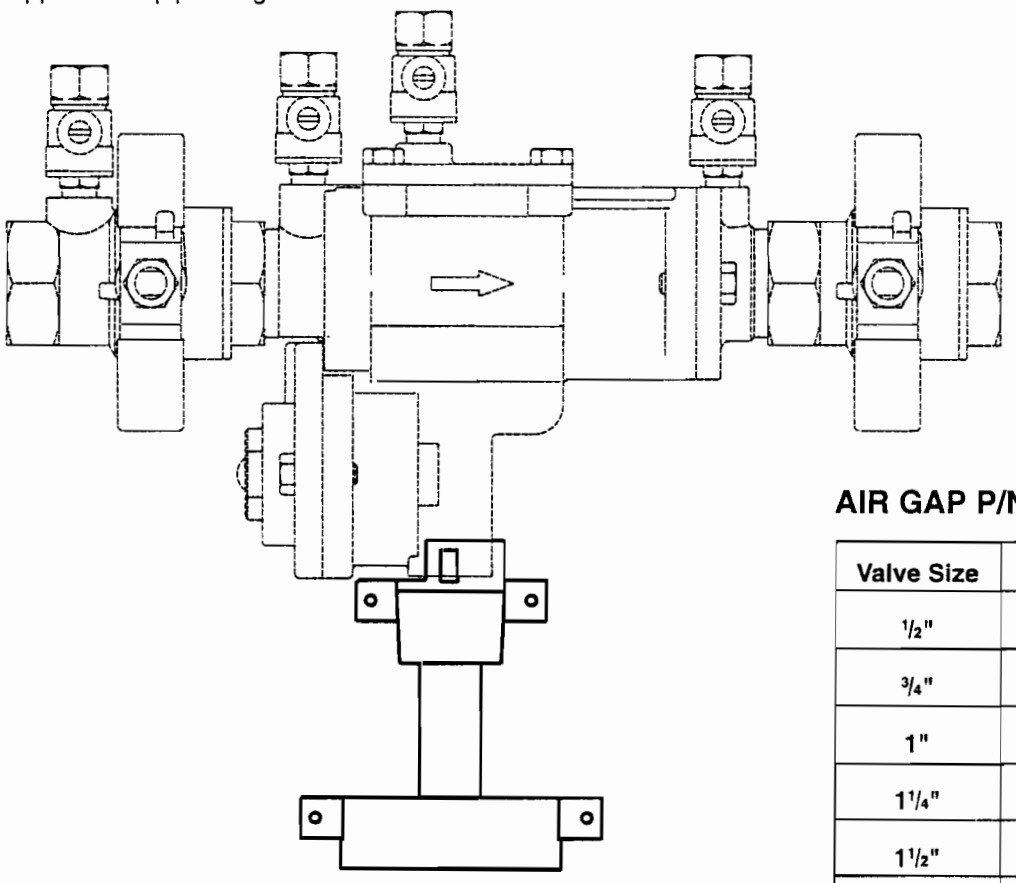

AIR GAP P/N

Valve Size	P/N
1/2"	905-358
3/4"	905-358
1"	905-358
1 1/4"	905-359
1 1/2"	905-359
2"	905-359

EXPLODED VIEW

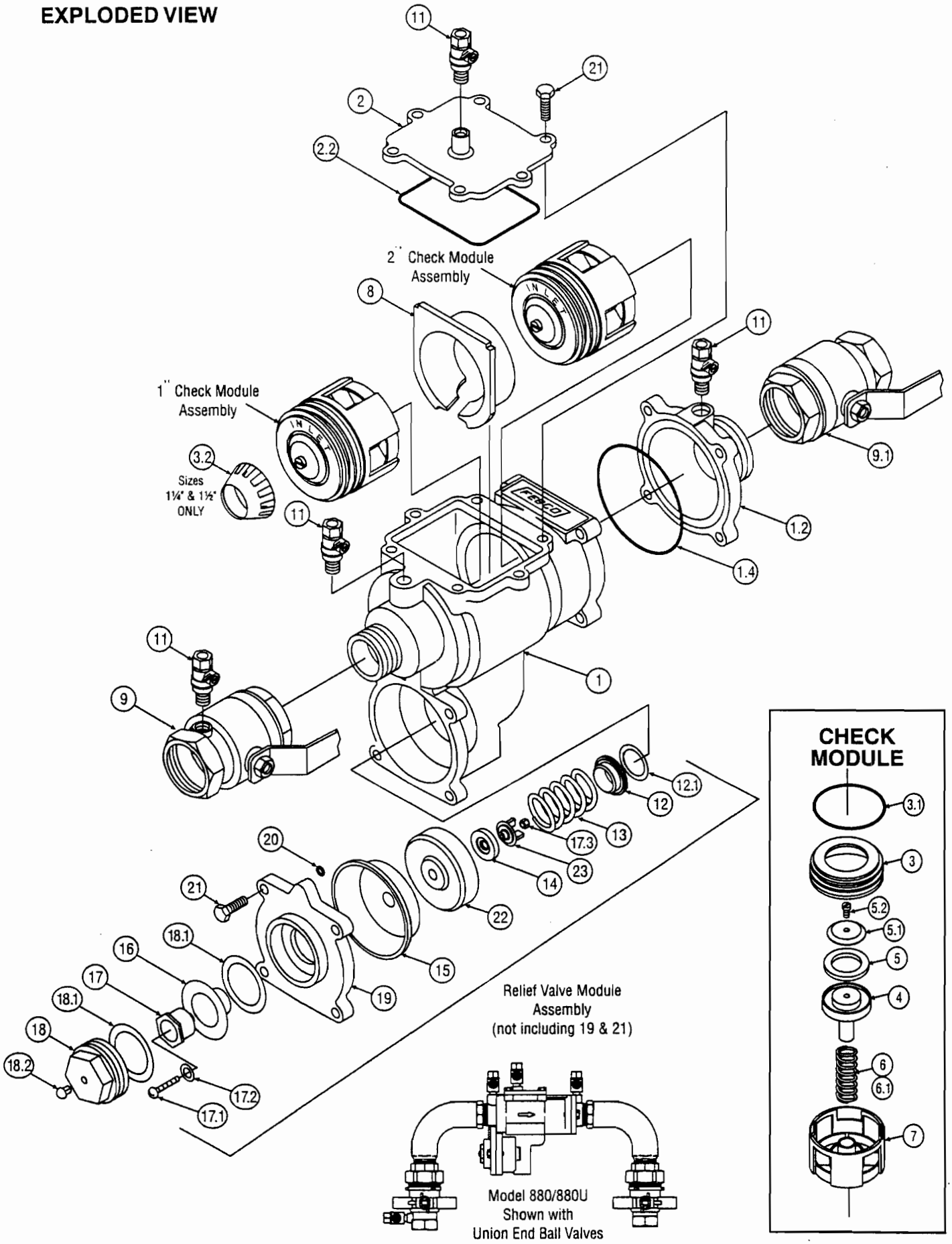

PARTS LIST 860 /860U / 880 / 880U

Item	Description	Qty.	1/2	3/4	1	1 1/4	1 1/2	2
1	Body	1	110135	110033	110034	110137	110030	110028
1.2	Tailpiece	1	110127	110040	110039	110138	110138	110037
1.4	O-Ring	1	39603070	39603070	39603370	39604370	39604370	39604370
2	Cover	1	110041	110041	110035	110026	110026	110026
2.2	O-Ring	1	39622470	396622470	39622970	39624070	39624070	39624070
3	Seat	2	500393	500393	500373	500358	500358	500358
3.1	O-Ring	2	39612670	39612670	39622470	39633770	39633770	39633770
3.2	Inlet Ring (1 1/4" & 1 1/2")	1	N/A	N/A	N/A	500397	500397	N/A
4	Poppet	2	500394	500394	500374	500357	500357	500357
5	Seat Disc	2	410127	410127	410134	410128	410128	410128
5.1	Disc Retainer	2	500396	500396	500391	500384	500384	500384
5.2	Round HD Screw	2	51653203	51653203	51653203	51951304	51951304	51951304
6	Spring	1	630177	630177	630173	630169	630169	630169
6.1	Spring (860 2nd Check)	1	630178	630178	630174	630170	630170	630170
7	Guide	2	500395	500395	500375	500356	500356	500356
8	Retainer Spacer	1	500392	500392	500376	500366	500366	500366
9*	Ball Valve Tapped	1	781244	781053	781054	781055	781056	781057
	Union End BV Tapped	1	781287	781288	781289	781290	781291	781292
9.1*	Ball Valve	1	781047	781048	781049	781050	781051	781052
	Union End Ball Valve	1	781293	781294	781295	781296	781297	781298
11	Test Cock	4	781074	781074	781074	781075	781075	781075
12	Seat Ring - RV	1	500378	500378	500378	500368	500368	500368
12.1	Gasket Ring - RV	1	410137	410137	410137	410131	410131	410131
13	Spring - RV	1	630175	630175	630175	630171	630171	6301713
14	Seat Disc - RV	1	420021	420021	420021	420020	420020	420020
15	Diaphragm - RV	1	400140	400140	400140	400138	400138	400138
16	Outer Diaphragm - RV	1	400139	400139	400139	400130	400130	400130
17	Small Piston - RV	1	500380	500380	500380	500370	500370	500370
17.1	Round HD Screw - RV	1	51653107	51653107	51653107	51653310	51653310	51653310
17.2	Washer - RV	1	360091	360091	360091	240143	240143	240143
17.3	Hex Nut - RV	1	52153100	52153100	52153100	52153300	52153300	52153300
18	Cylinder - RV	1	200834	200834	200834	200833	200833	200833
18.1	Slip Ring Cylinder - RV	2	340107	340107	340107	340105	340105	340105
18.2	Slide (Plug) - RV	1	781225	781225	781225	781225	781225	781225
19	Cover - RV	1	110036	110036	110036	110029	110029	110029
20	O-Ring - RV	1	39600670	39600670	39600670	39600670	39600670	39600670
21	Hex HD Capscrew	14	51151306	51151306	51151306	51151406	51151406	51151406
22	Large Piston - RV	1	500377	500377	500377	500367	500367	500367
23	Guide - RV	1	500382	500382	500382	550372	550372	550372

*Union End Ball Valve Not Shown.

REPAIR KITS: 860 /860U / 880 / 880U

How to order parts and Repair Kits

1. Locate item number and kit number in this maintenance manual.
2. Verify the size of the valve the parts are to be used on.
3. Provide full model number located on I.D. plate.
4. Give kit number.
5. A serial number (located on the I.D. plate) will assist in ordering the proper kits.
6. Contact your local FEBCO Parts Distributor.

Rubber Parts Kit		1/2	3/4	1	1 1/4	1 1/2	2
Part No.		905-355	905-355	905-356	905-357	905-357	905-357
All Sizes Include:							
Item	Description	Qty.	Item	Description	Qty.		
2.2	O-Ring	1	14	Seat Disc - RV	1		
3.1	O-Ring	1	15	Diaphragm - RV	1		
5	Seat Disc	2	16	Outer Diaphragm - RV	1		
12	Seat Ring - RV	1	18.1	Slip Ring Cylinder - RV	2		
12.1	Gasket Ring - RV	1	20	O-Ring - RV	1		

Check Module Rubber Kit		1/2	3/4	1	1 1/4	1 1/2	2
Part No.		905-342	905-342	905-343	905-344	905-344	905-344
All Sizes Include:							
Item	Description	Qty.	Item	Description	Qty.		
2.2	O-Ring	1	5	Seat Disc	2		
3.1	O-Ring	2					

Relief Valve Rubber Kit		1/2	3/4	1	1 1/4	1 1/2	2
Part No.		905-345	905-345	905-345	905-346	905-346	905-346
All Sizes Include:							
Item	Description	Qty.	Item	Description	Qty.		
12	Seat Ring - RV	1	16	Outer Diaphragm - RV	1		
12.1	Gasket Ring - RV	1	18.1	Slip Ring Cylinder - RV	2		
14	Seat Disc - RV	1	20	O-Ring - RV	1		
15	Diaphragm - RV	1					

REPAIR KITS - CONTINUED

Single Poppet Kit	1/2	3/4	1	1 1/4	1 1/2	2
Part No.	905-339	905-339	905-340	905-341	905-341	905-341

All Sizes Include:

Item	Description	Qty.	Item	Description	Qty.
4	Poppet	1	5.1	Disc Retainer	1
5	Seat Disc	1	5.2	Round HD Screw	1

1st Check Module Assembly	1/2	3/4	1	1 1/4	1 1/2	2
Part No.	905-348	905-348	905-350	905-352	905-352	905-352

All Sizes Include:

Item	Description	Qty.	Item	Description	Qty.
3	Seat	1	5.1	Disc Retainer	1
3.1	O-Ring	1	5.2	Round HD Screw	1
4	Poppet	1	6.1	Spring	1
5	Seat Disc	1	7	Guide	1

2nd Check Module Assembly	1/2	3/4	1	1 1/4	1 1/2	2
Part No.	905-347	905-347	905-349	905-351	905-351	905-351

All Sizes Include:

Item	Description	Qty.	Item	Description	Qty.
3	Seat	1	5.1	Disc Retainer	1
3.1	O-Ring	1	5.2	Round HD Screw	1
4	Poppet	1	6	Spring	1
5	Seat Disc	1	7	Guide	1

Relief Valve Module Assembly Kit	1/2	3/4	1	1 1/4	1 1/2	2
Part No.	905-353	905-353	905-353	905-354	905-354	905-354

All Sizes Include:

Item	Description	Qty.	Item	Description	Qty.
12	Seat Ring - RV	1	17.1	Round HD Screw - RV	1
12.1	Gasket Ring - RV	1	17.2	Washer - RV	1
13	Spring - RV	1	17.3	Hex Nut - RV	1
14	Seat Disc - RV	1	18.1	Slip Ring Cylinder - RV	2
15	Diaphragm - RV	1	20	O-Ring - RV	1
16	Outer Diaphragm - RV	1	22	Large Piston -RV	1
17	Small Piston - RV	1	23	Guide - RV	1

FREEZE PROTECTION

The backflow prevention assembly may be subject to damage if the internal water is allowed to freeze. The unit must be protected from freezing using a heated enclosure, insulation using heat tape, or other suitable means. The unit must always be accessible for testing and maintenance. If the system will be shut down during freezing weather, use the following procedures to drain internal passages.

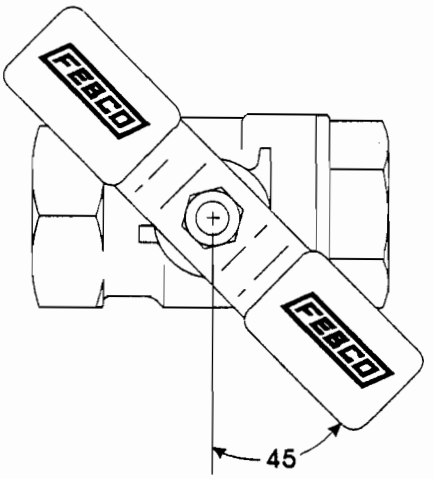

Ball Valve Shut-Off Draining Procedure

If the assembly has been installed with ball valve shut-off valves, they must also be properly drained to prevent freeze damage. After draining procedure has been completed on the backflow prevention assembly, position all ball valve shut-offs and test cocks in a half open/half closed (45 degree) position.

Open the ball valve approximately 45 degrees while draining the pipeline and assembly to allow water between the ball valve and valve body to drain. Leave the ball valve in this position for the winter to prevent freeze damage.

The ball valve must be fully closed before the system is repressurized. OPEN AND CLOSE BALL VALVES SLOWLY TO PREVENT DAMAGE TO THE SYSTEM CAUSED BY WATER HAMMER.

Main Valve Draining Procedure (1/2" - 2")

1. Close the main shut-off valve.
2. Open the inlet drain.
3. Open the inlet and outlet ball valves 45 degree (half open, half closed).
4. Open all testcocks.
5. Open the outlet drain.
6. Remove the cover and inlet check module until all water inside valve drains back out through inlet drain.
7. If you *blowout* the piping downstream of the backflow assembly using compressed air: Connect the air supply to the outlet drain and close the outlet ball valve. After clearing the system with air, partially open the outlet ball valve. Leave all drain valves, testcocks, and ball valves in half open/half closed position for the winter.
8. (RP UNITS ONLY) Loosen the relief valve cover to drain. Tighten when draining is complete.

FEBCO PERFORMANCE, VALUE, AND QUALITY

FEBCO MasterSeries® (2½" - 10")

	Double Check Assembly	Double Check Detector Assembly	Reduced Pressure Assembly
"N" - Shape	Model 870V 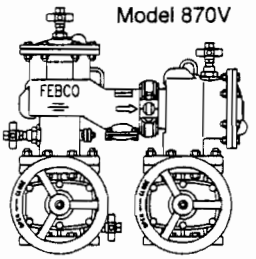	Model 876V 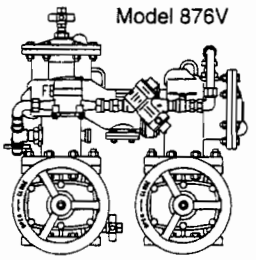	Model 880V 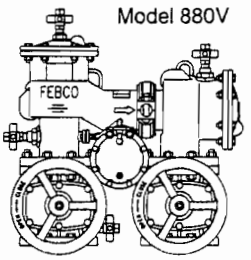
Vertical	Model 870V 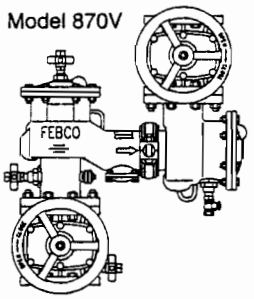	Model 876V 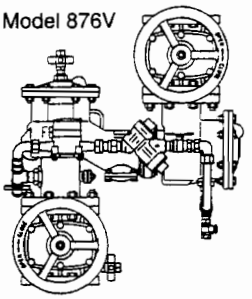	Model 880V 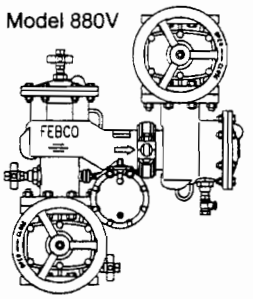
Conventional In-Line	Model 850 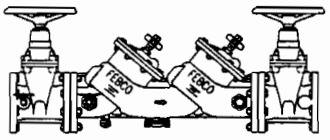	Model 856 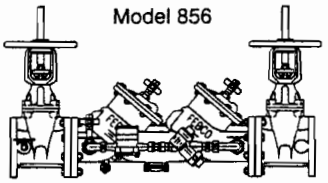	Model 860 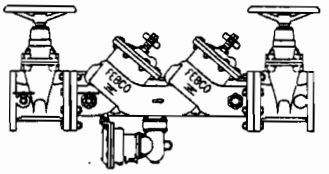

For nearly half a century customers have looked to FEBCO for quality products, reliable low headloss performance, and great value. Today, with the new FEBCO MasterSeries® designs, FEBCO has once again taken the initiative with patented product innovations.

All 2½ through 10" MasterSeries products include:

- Patented VectorCheck performance for low head loss
- Cast ductile iron bodies for lighter weight
- Lowest installed cost — Saves on labor and material
- Choice of cost-saving "N"-Shape designs, revolutionary vertical designs, or conventional in-line designs.

Contact a FEBCO representative today for product literature and technical specifications on FEBCO MasterSeries® backflow prevention products.

WARRANTY

All products manufactured and sold by CMB Industries, Inc. carry with them the following warranty: CMB Industries, Inc. warrants to the original purchaser (who is the end user) all products manufactured by it will be free from defects in workmanship and material for a period of one (1) year from the date of original shipment.

CMB Industries, Inc. also warrants that all internal components of $^1/_2$" through 2" Model 850/860 and $^1/_2$" through 1" Model 766 products, will be free from defects in workmanship and material for a period of five (5) years from the date of original shipment and also that the body only of the $^1/_2$" through $1^1/_4$" Model 765 will be subject to a lifetime warranty against damage by freezing.

This warranty is applicable provided such products are used under normal conditions within the recognized pressure, flow and temperature limits and are given normal service and care. CMB INDUSTRIES, INC. MAKES NO OTHER REPRESENTATION OR WARRANTY OF ANY KIND, EXPRESSED OR IMPLIED, IN FACT OR IN LAW, AND EXPRESSLY DISCLAIMS ALL OTHER WARRANTIES, INCLUDING WITHOUT LIMITATION, THE WARRANTIES OF MERCHANTABILITY OR FITNESS FOR PARTICULAR PURPOSE. In the event of a defect in material or workmanship of a product covered by this warranty, CMB Industries, Inc. shall, at its sole option, repair or replace such defective product. CMB Industries, Inc. shall not be liable for any labor required to repair or replace any product covered by this warranty. This warranty is void with respect to any such product which is altered or tampered with by anyone without prior consent of CMB Industries, Inc. CMB Industries, Inc. shall not be liable under any circumstances for damages caused by accident, misuse or abuse of the product or for failure to follow the installation, maintenance or operating instructions. IN NO EVENT SHALL CMB INDUSTRIES BE LIABLE FOR INCIDENTAL, INDIRECT, PERSONAL INJURY, PROPERTY OR PUNITIVE DAMAGES.

To make a claim under this warranty, the buyer must notify the factory in writing within ten (10) days of discovery of any claimed defects or workmanship, and if authorized by the factory, shall return the product in the same condition as when received by the buyer, transportation prepaid, to the factory or to such other location as directed by the factory. If said returned product is found by the factory to be defective in workmanship or materials, it shall be repaired or replaced without charge, pursuant to the terms of this warranty. This warranty excludes component parts or appurtenances not manufactured by CMB Industries, Inc. Any claims with respect to such equipment must be made to the manufacturer thereof in accordance with the terms of the warranty, if any, given by such manufacturer, or pursuant to such warranties as may exist by law. The physical or chemical properties of CMB Industries, Inc. products represent typical, average values obtained in accordance with test methods and are subject to normal manufacturing variations. This information is supplied as a technical service and is subject to change without notice.

FEBCO BACKFLOW PREVENTION...

A product of CMB Industries, Inc.

CMB Industries Inc. is a leader in the water control market with more than 75 years of experience in the design and manufacturing of the world's most innovative water control products. CMB Industries products include the FEBCO Backflow Prevention Assemblies, The POLYJET Control Valve, and K-FLO Butterfly Valve.

For more information on how FEBCO Backflow Prevention or other CMB Industries products can meet your specific installation or project need, contact the factory or an authorized representative today.

CMB Industries, Inc.

Post Office Box 8070 • Fresno, California • U.S.A.
Tel# (559) 252-0791 • Fax# (559) 453-9030 • www.cmb-ind.com

Copyright 1999 CMB Industries, Inc.

FEBCO BACKFLOW PREVENTION

FEBCO

MASTER series®

OPERATIONS & MAINTENANCE

M A N U A L

Model 850/850U

Double Check Assembly

1/2" through 2"

FEBCO® BACKFLOW PREVENTION

Performance at the lowest installed cost!

TABLE OF CONTENTS

Features and Operating Procedures 2

Vandalism 2

General Service Procedures 3

Cut-A-Way Drawing 3

Trouble Shooting Procedures 4

Check Module Disassembly 4

Check Module Seal Replacement 5

Check Module Re-Assembly 5

Exploded View 6

Parts List 7

Repair Kits 8

Testing 9

Freeze Protection 9

Other FEBCO MasterSeries® Products 10

Notes Page 11

Warranty ..... Back Cover

FEATURES AND OPERATING PROCEDURES

The **FEBCO Double Check Assembly Backflow Preventer** consists of two independently operating, spring loaded check valves. The pressure drop across the first check valve is approximately 1.0 PSIG with no flow. The pressure drop across the second check valve is also 1.0 PSIG with no flow. A complete assembly includes two shut-off valves and four test cocks.

VANDALISM

If the unit is installed where vandalism may be a problem, the assembly should be protected and secured. On 1/2" through 2" units the handles of shut-off valves can be removed to discourage tampering.

A protective enclosure can be installed over the unit to discourage vandals. If an enclosure is used, it should be installed so that adequate clearance is available for maintenance and testing. Consult local codes before installing any type of protective enclosure.

GENERAL SERVICE PROCEDURES

1. FEBCO backflow prevention assemblies can be serviced with standard tools and are designed for ease of maintenance. The assemblies are designed to be serviced in line, so the unit should not need to be removed from the line during servicing. **NO special tools are required.**

   Suggested Tool Kit Model 850 (½" - 2")
   - 1 crescent wrench
   - 1 medium standard screw driver
   - Differential pressure test kit
   - 1 medium Phillips screw driver
   - Box/open end wrench

2. The most common cause of check fouling is dirt and debris in the seating areas. The line should be flushed clean of debris before installation of the assembly. To flush the line after installation of the assembly, slowly close the inlet shut-off valve, remove the cover and spring assemblies of both check valves and open the inlet shut-off valve to allow sufficient flow of water through the assembly to clear all sand, debris, etc. from the line. If debris in the water continues to cause fouling, a strainer may be installed upstream of the assembly (check local codes).

3. Rinse all parts with clean water before reassembly.

4. Carefully inspect seals, and seating surfaces for damage or debris. If the check valve seat disc has been severely cut at the seat ring diameter, the assembly has been subjected to extremely high and repeated back pressure. Either thermal water expansion or water hammer are the most likely causes. If back pressure persists, consider installation of a pressure relief valve downstream of the assembly.

5. Use caution to avoid damaging any guiding surfaces while handling parts. Do not force parts together. The o-ring seals used in FEBCO assemblies require only a small tightening force to insure a positive seal.

6. Test unit after servicing in accordance with locally approved test methods to insure proper operation (see page 9 for more details).

7. Refer to applicable exploded drawings and parts lists (pages 6-8) for visual aid information.

8. Use food grade petroleum jelly as a lubricant as instructed in this manual.

CUT-A-WAY DRAWING

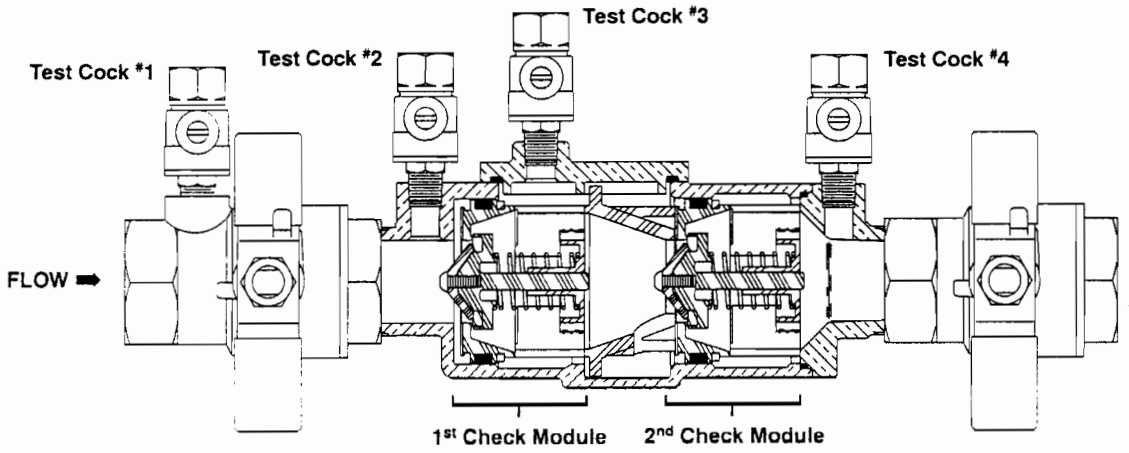

Note: Union End Ball Valves Not Shown

TROUBLE SHOOTING GUIDE

Symptom #1	Cause:	Solution:
Check fails to hold 1.0 PSID min.	A. Debris on sealing surfaces	Inspect and clean
	B. Leaking shut-off valve	Inspect and clean, or repair
	C. Damaged seat or seat disc	Disassemble and replace
	D. Spring stem not moving freely	Inspect for debris or damage

Symptom #2	Cause:	Solution:
Chatter during flow conditions.	A. Worn or damaged parts	Inspect and replace

Symptom #3	Cause:	Solution:
Low flows passing through the mainline valve.	A. Mainline check fouled	Inspect and clean, or repair

CHECK MODULE DISASSEMBLY

1. Slowly close inlet and outlet ball valves. Bleed residual pressure by opening #2, #3, and #4 test cocks. Allow the test cocks to remain open until the reassembling is completed. Test cock #1 should remain closed.

2. Remove the cover bolts (item 21) using the appropriate size wrench.

3. Remove spacer (item 8) by grasping the flanged end of the spacer and pulling straight up.

4. Remove the inlet check assembly by pulling it in the direction of flow out from the body bore until it is completely exposed then lift out of the body.

5. Remove the outlet check assembly by placing the tip of a medium size flat nose screw driver in the slot of the seat (item 3) and prying the check assembly back until the red o-ring (item 3.1) is exposed. Then, using your fingers, pull it out from the body bore until it is completely exposed then lift out of the body.

SEAL REPLACEMENT

Both check assemblies are disassembled and reassembled in the same manner. To service the checks you may replace the check modules with new ones by using check module assembly kits available from FEBCO. Or, you may also replace the rubber components in the check modules by using the replacement rubber parts kits available from FEBCO. For details on parts and kits please see pages 6 - 8.

1. To disassemble, grasp the seat section (item 3) in one hand and the guide section (item 7) in the other hand and then rotate in a counter clock wise direction (approx. 1/8 turn) until the two parts disengage.

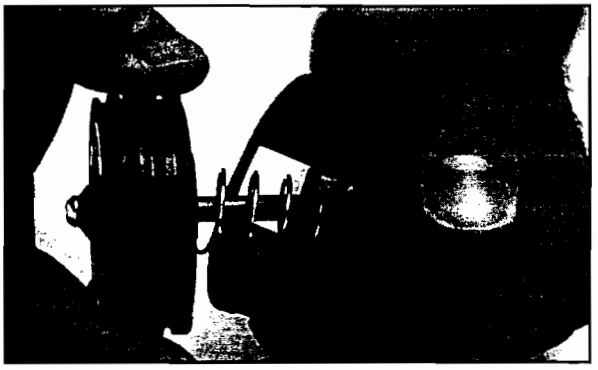

2. Remove retaining screw (item 5.2) and disc retainer (item 5.1) so the rubber disc is fully exposed. Carefully pry out the rubber disc from poppet. Be careful not to damage the poppet when removing the disc. Rinse poppet in clean water and replace the old rubber disc with new rubber disc. If the rubber disc is not damaged it can be reversed and reinstalled when a new disc is not available. Rinse all other internal components with clean water. Replace disc retainer and secure with retaining screw (item 5.2).

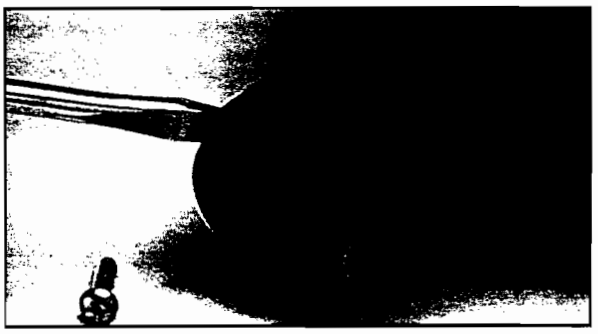

3. Reassemble check module in the reverse manner as indicated in above. When reassembling the check module be sure to insert the poppet stem into the guide hole and keep fingers clear of the slots in the module.

CHECK MODULE RE-ASSEMBLY

Use reverse procedure for assembly with the following special instructions.

1. Inspect the check module o-ring (item 3.1) for damage and replace if necessary. To ease assembly, apply a thin coating of FEBCO factory supplied petroleum jelly (food grade) to the o-ring (item 3.1) prior to installing in body. **CAUTION:** Excess lubricant may cause foreign debris to collect on internal components which could foul the check assembly and result in a test failure.

2. The word **INLET** is inscribed on the end of each module. That end should face the inlet of the valve.

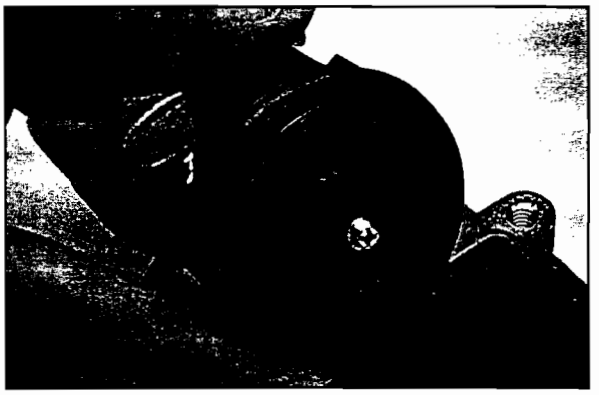

3. When replacing spacer (item 8) between the two check assemblies be sure that the flanged end of the spacer is touching the back side of the inlet check assembly so that the cover will fit properly. Next, replace cover making sure #3 test cock is on the upstream side. Do not over tighten cover bolts (Approximately 35 inch-pounds is sufficient).

4. After reassembling, close test cock #2, #3 and #4 (test cock #1 should already be closed), slowly open inlet ball valve. Bleed air from the unit by opening and closing test cock #2, then #3 and finally #4.

5. Check for external leaks and repair if necessary. Slowly open outlet ball valve.

6. Test assembly in accordance with the locally approved test methods.

EXPLODED VIEW

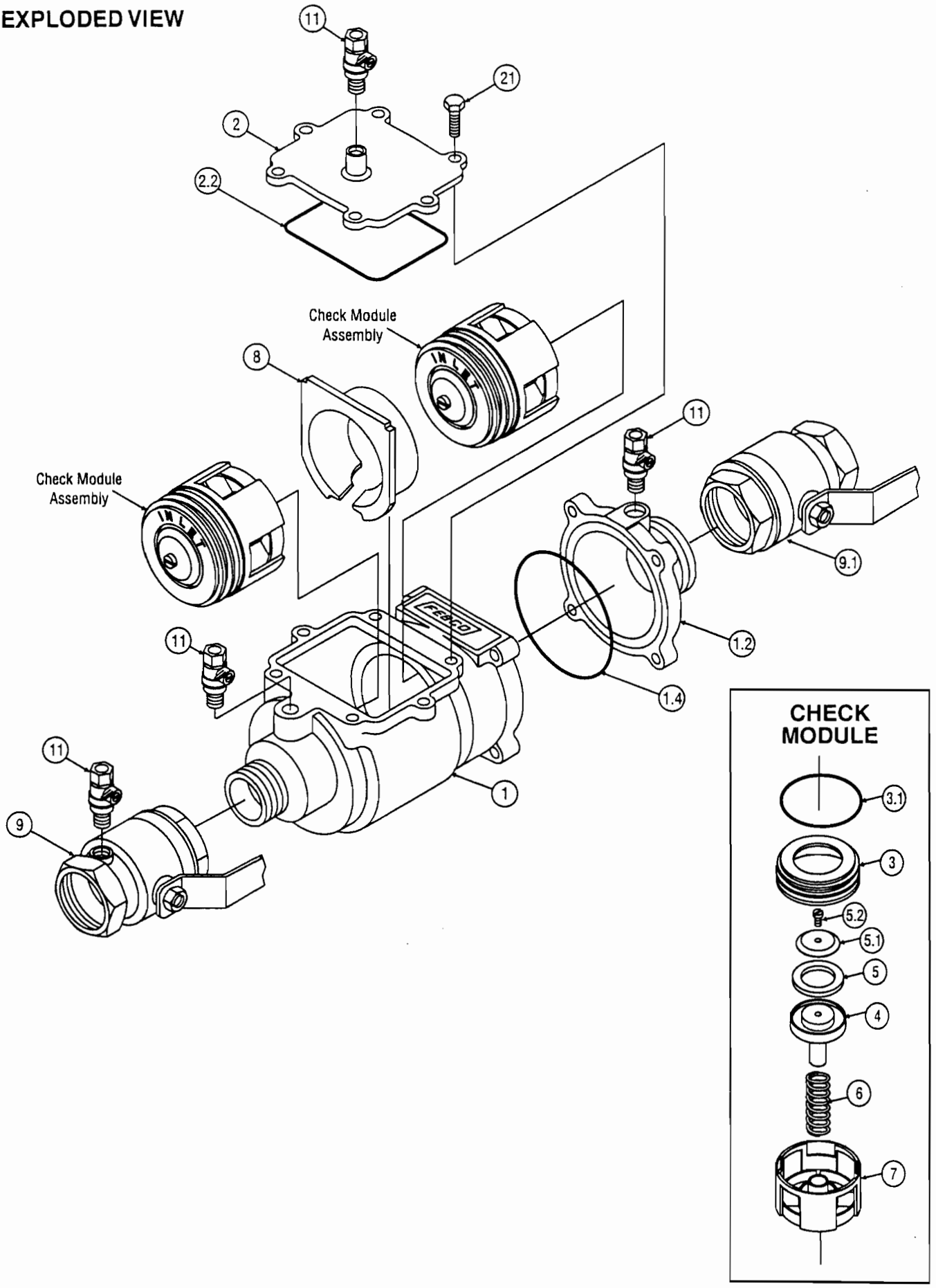

PARTS LIST

Item	Description	Qty.	1/2	3/4	1	1 1/4	1 1/2	2
1	Body	1	110134	110031	110032	110136	110027	110025
1.2	Tailpiece	1	110127	110040	110039	110138	110138	110037
1.4	O-Ring	1	39603070	39603070	39603370	39604370	39604370	39604370
2	Cover	1	110041	110041	110035	110026	110026	110026
2.2	O-Ring	1	39622470	39622470	39622970	39624070	39624070	39624070
3	Seat	2	500393	500393	500373	500358	500358	500358
3.1	O-Ring	2	39612670	39612670	39622470	39633770	39633770	39633770
4	Poppet	2	500394	500394	500374	500357	500357	500357
5	Seat Disc	2	410127	410127	410134	410128	410128	410128
5.1	Disc Retainer	2	500396	500396	500391	500384	500384	500384
5.2	Round HD Screw	2	51653203	51653203	51653203	51951304	51951304	51951304
6	Spring	1	630177	630177	630173	630169	630169	630169
7	Guide	2	500395	500395	500375	500356	500356	500356
8	Retainer Spacer	1	500392	500392	500376	500366	500366	500366
9*	Ball Valve Tapped	1	781244	781053	781054	781055	781056	781057
	Union End BV Tapped	1	781287	781288	781289	781290	781291	781292
9.1*	Ball Valve	1	781047	781048	781049	781050	781051	781052
	Union End Ball Valve	1	781293	781294	781295	781296	781297	781298
11	Test Cock	4	781074	781074	781074	781075	781075	781075
12	Seat Ring - RV	1	500378	500378	500378	500368	500368	500368
21	Hex HD Capscrew	10	51151306	51151306	51151306	51151406	51151406	51151406

*Union End Ball Valve Not Shown.

REPAIR KITS

How to order parts and Repair Kits

1. Locate item number and kit number in this maintenance manual.
2. Verify the size of the valve the parts are to be used on.
3. Provide full model number located on I.D. plate.
4. Give kit number.
5. A serial number (located on the I.D. plate) will assist in ordering the proper kits.
6. Contact your local FEBCO Parts Distributor.

850 Rubber Parts Kit		½	¾	1	1¼	1½	2
Part No.		905-342	905-342	905-343	905-344	905-344	905-344
All Sizes Include:							
Item	Describtion	Qty.	Item	Describtion	Qty.		
2.2	O-Ring	1	5	Seat Disc	2		
3.1	O-Ring	2					

850 Check Module Assembly		½	¾	1	1¼	1½	2
Part No.		905-347	905-347	905-349	905-351	905-351	905-351
All Sizes Include:							
Item	Describtion	Qty.	Item	Describtion	Qty.		
3	Seat	1	5.1	Disc Retainer	1		
3.1	O-Ring	1	5.2	Round HD Screw	1		
4	Poppet	1	6	Spring	1		
5	Seat Disc	1	7	Guide	1		

850 Single Poppet Kit		½	¾	1	1¼	1½	2
Part No.		905-339	905-339	905-340	905-341	905-341	905-341
All Sizes Include:							
Item	Describtion	Qty.	Item	Describtion	Qty.		
4	Poppet	1	5.1	Disc Retainer	1		
5	Seat Disc	1	5.2	Round HD Screw	1		

TESTING

All mechanical devices should be inspected on a regular basis to ensure they are working correctly. The assembly should be tested at time of initial installation, after servicing or maintenance, and at least annually thereafter. Acceptable test procedures are published by Foundation for Cross Connection Control and Hydraulic Research at the University of Southern California (USC), The American Water Works Association (AWWA), The American Society of Sanitary Engineering (ASSE Series 5000) and the Canadian Standards Association (CAN/CSA B64•10). Please consult the regulatory authority in your area for more specific information.

FREEZE PROTECTION

The backflow prevention assembly may be subject to damage if the internal water is allowed to freeze. The unit must be protected from freezing using a heated enclosure, insulation heat tape, or other suitable means. The unit must always be accessible for testing and maintenance. If the system will be shut down during freezing weather, use the following procedures to drain internal passages.

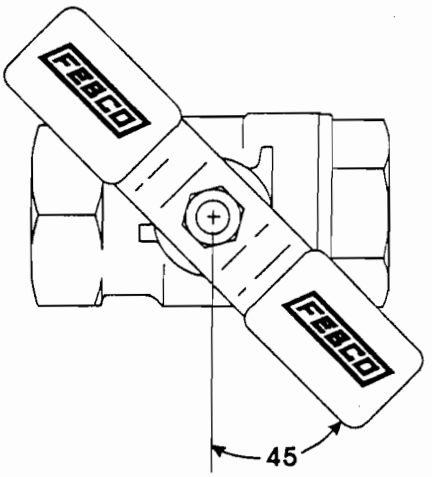

Ball Valve Shut-Off Draining Procedure

If the assembly has been installed with ball valve shut-off valves, they must also be properly drained to prevent freeze damage. After draining procedure has been completed on the backflow prevention assembly, position all ball valve shut-offs and test cocks in a half open/half closed (45 degree) position.

Open the ball valve approximately 45 degrees while draining the pipeline and assembly to allow water between the ball valve and valve body to drain. Leave the ball valve in this position for the winter to prevent freeze damage.

The ball valve must be fully closed before the system is repressurized. OPEN AND CLOSE BALL VALVES SLOWLY TO PREVENT DAMAGE TO THE SYSTEM CAUSED BY WATER HAMMER.

Main Valve Draining Procedure (½" - 2")

1. Close the main shut-off valve.
2. Open the inlet drain.
3. Open the inlet and outlet ball valves 45 degree (half open, half closed).
4. Open all testcocks.
5. Open the outlet drain.
6. Remove the cover and inlet check module until all water inside valve drains back out through inlet drain.
7. If you *blowout* the piping downstream of the backflow assembly using compressed air: Connect the air supply to the outlet drain and close the outlet ball valve. After clearing the system with air, partially open the outlet ball valve. Leave all drain valves, testcocks, and ball valves in half open/half closed position for the winter.

FEBCO PERFORMANCE, VALUE, AND QUALITY

FEBCO MasterSeries® (2½" - 10")

	Double Check Assembly	Double Check Detector Assembly	Reduced Pressure Assembly
"N" - Shape	Model 870V 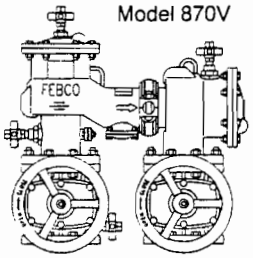	Model 876V 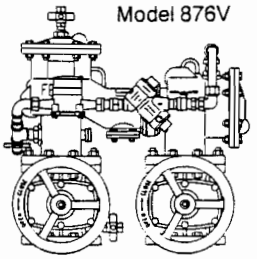	Model 880V 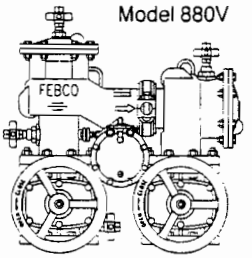
Vertical	Model 870V 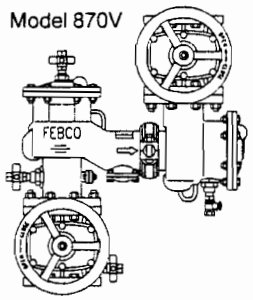	Model 876V 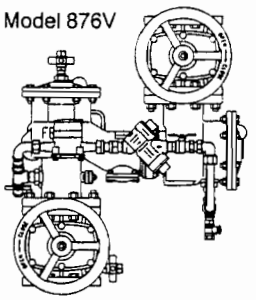	Model 880V 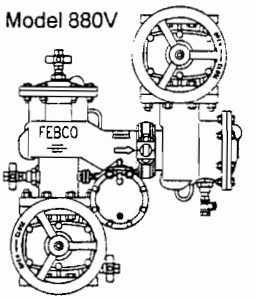
Conventional In-Line	Model 850 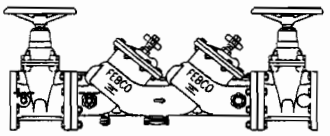	Model 856 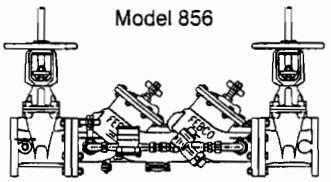	Model 860 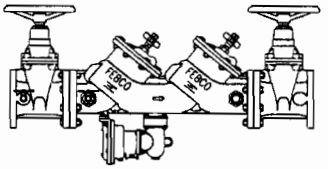

For nearly half a century customers have looked to FEBCO for quality products, reliable low headloss performance, and great value. Today, with the new FEBCO MasterSeries® designs, FEBCO has once again taken the initiative with patented product innovations.

All 2½ through 10" MasterSeries products include:

- Patented VectorCheck performance for low head loss
- Cast ductile iron bodies for lighter weight
- Lowest installed cost — Saves on labor and material
- Choice of cost-saving "N"-Shape designs, revolutionary vertical designs, or conventional in-line designs.

Contact a FEBCO representative today for product literature and technical specifications on FEBCO MasterSeries® backflow prevention products.

NOTES

WARRANTY

All products manufactured and sold by CMB Industries, Inc. carry with them the following warranty: CMB Industries, Inc. warrants to the original purchaser (who is the end user) all products manufactured by it will be free from defects in workmanship and material for a period of one (1) year from the date of original shipment.

CMB Industries, Inc. also warrants that all internal components of 1/2" through 2" Model 850/860 and 1/2" through 1" Model 766 products, will be free from defects in workmanship and material for a period of five (5) years from the date of original shipment and also that the body only of the 1/2" through 1 1/4" Model 765 will be subject to a lifetime warranty against damage by freezing.

This warranty is applicable provided such products are used under normal conditions within the recognized pressure, flow and temperature limits and are given normal service and care. CMB INDUSTRIES, INC. MAKES NO OTHER REPRESENTATION OR WARRANTY OF ANY KIND, EXPRESSED OR IMPLIED, IN FACT OR IN LAW, AND EXPRESSLY DISCLAIMS ALL OTHER WARRANTIES, INCLUDING WITHOUT LIMITATION, THE WARRANTIES OF MERCHANTABILITY OR FITNESS FOR PARTICULAR PURPOSE. In the event of a defect in material or workmanship of a product covered by this warranty, CMB Industries, Inc. shall, at its sole option, repair or replace such defective product. CMB Industries, Inc. shall not be liable for any labor required to repair or replace any product covered by this warranty. This warranty is void with respect to any such product which is altered or tampered with by anyone without prior consent of CMB Industries, Inc. CMB Industries, Inc. shall not be liable under any circumstances for damages caused by accident, misuse or abuse of the product or for failure to follow the installation, maintenance or operating instructions. IN NO EVENT SHALL CMB INDUSTRIES BE LIABLE FOR CONSEQUENTIAL, INCIDENTAL, INDIRECT, PERSONAL INJURY, PROPERTY OR PUNITIVE DAMAGES.

To make a claim under this warranty, the buyer must notify the factory in writing within ten (10) days of discovery of any claimed defects or workmanship, and if authorized by the factory, shall return the product in the same condition as when received by the buyer, transportation prepaid, to the factory or to such other location as directed by the factory. If said returned product is found by the factory to be defective in workmanship or materials, it shall be repaired or replaced without charge, pursuant to the terms of this warranty. This warranty excludes component parts or appurtenances not manufactured by CMB Industries, Inc. Any claims with respect to such equipment must be made to the manufacturer thereof in accordance with the terms of the warranty, if any, given by such manufacturer, or pursuant to such warranties as may exist by law. The physical or chemical properties of CMB Industries, Inc. products represent typical, average values obtained in accordance with test methods and are subject to normal manufacturing variations. This information is supplied as a technical service and is subject to change without notice.

FEBCO BACKFLOW PREVENTION...

A product of CMB Industries, Inc.

CMB Industries Inc. is a leader in the water control market with more than 75 years of experience in the design and manufacturing of the world's most innovative water control products. CMB products include FEBCO Backflow Preventers, K-FLO Butterfly Valves and POLYJET Control Valves. As an ISO 9001 Certified manufacturer, CMB is committed to quality and performance.

For more information about FEBCO Backflow Preventers, visit our web site at www.FEBCOonline.com or request our interactive CD, CMB+, with its electronic catalog, valve selection guide, and technical drawings and data.

CMB Industries, Inc. ISO 9001 Certified

Post Office Box 8070 • Fresno, California • U.S.A.
Tel# (559) 252-0791 • Fax# (559) 453-9030 • www.cmb-ind.com • www.FEBCOonline.com

Copyright 2001 CMB Industries, Inc.

Certificate of Substantial Completion

CERTIFICATE OF SUBSTANTIAL COMPLETION

Owner: New York State Department of Environmental Conservation (Department)

Engineer: Stearns & Wheler, LLC

Project: Lehigh Valley Railroad Derailment Site – Water Distribution System

Contractor: Milherst Construction, Inc.
2601 Millersport Highway
P.O. Box 631
Getzville, NY 14068-0631

Contract No.: D004327

Site No.: 8-19-014

Project Specified Part shall include: Substantial Completion of Contract No. D004327. Contractor is entitled to his retainage minus twice the punch list (see attached) of all items.

Definition of Substantial Completion: The Work, or specified part thereof, has progressed to the point where, in the opinion of the Department as evidenced by the Department's definitive Certificate of Substantial Completion, it is sufficiently complete, in accordance with the Contract Documents (with the exception of the minor items identified during inspection described in Paragraph 13.6 of the General Conditions), so that it can be utilized continuously for the purposes for which it is intended.

Date of Substantial Completion: February 24, 2003

Written mutual agreements upon which the date of Substantial Completion has been mutually agreed to are as follows:

1. Agreement to Substantial Completion by the Department and Engineer will in no way affect the obligations of the Contractor under the terms and provisions of the Contract with respect to uncompleted work.

2. The Contractor shall subsequently satisfactorily complete or correct all unfinished items in the work accepted by the Department and Engineer as substantially satisfactorily complete.

3. The Engineer, Monroe County Water Authority, Livingston County Water & Sewer Authority, and Contractor made an inspection of the work on January 30, 2003 and the Engineer conducted various inspections of the customer services installed through February 24, 2003. Following these inspections, the Engineer advised the Contractor of remaining items to be completed or corrected and provided the Contractor with the following Estimate of Work

Remaining. The Contractor shall endorse said Estimate of Work Remaining as evidence of agreement and provide the Engineer and the Department with a mutually acceptable schedule for completion of remaining work.

4. The Contractor shall provide a guarantee for all punch-list items for a period of one year from the date of Final Inspection.

ESTIMATE OF WORK REMAINING
(ATTACHED)

COMPLETION OF SUBSTANTIAL COMPLETION

Stearns & Wheler, LLC

By: _____

Title: Principal

Date: 4/26/03

Milherst Construction, Inc.

By: _____

Title: V-President

Date: 3/3/03

New York State Department of Environmental Conservation

By: _____

Title: _____

Date: 3/5/03

Stearns & Wheler, LLC
Environmental Engineers and Scientists

LIST OF ITEMS TO BE COMPLETED

LEHIGH VALLEY RAILROAD DERAILMENT SITE
WATER DISTRIBUTION SYSTEM
NYSDEC SITE NO. 8-19-014
CONTRACT NO. D004328

February 24, 2003
S&W No. 10209.24

DESCRIPTION	ASSOCIATED COST
1. Pull and clean RPZs at the Genesee Country Campground and House #139 Limerock Road.	$100
2. Inspect and certify all backflow preventers (17 units @ $100 each).	$1,700
3. Install silicone joints, paint vent pipes, and other related items at all vaults.	$1,000
4. Supply and install frames and covers at meter manholes.	$1,000
5. Install bollards at hydrants and pipe bends.	Existing pay item in Change Order #2 not completed yet
6. Install thrust blocks on water main at Circular Hill Road and Route 5.	Existing pay item in Change Order #2 not completed yet
7. Pavement restoration (Bid Item 16).	$505
8. Asphalt top course (Bid Item 17).	Existing Bid Item 17 not completed yet
9. Asphalt driveways and parking areas (Bid Item 18A).	$505
10. NYSDOT asphalt driveways and parking areas (Bid Item 18B).	$1,760
11. Gravel/stone driveways and parking areas (Bid Item 19).	$330
12. Concrete sidewalk and driveway replacement (Bid Item 20).	$30
13a. Final cleanup and site restoration (portions of Bid Item 24 already completed).	$4,070
13b. Final cleanup and site restoration (remainder of Bid Item 24).	Existing Bid Item 24 not completed yet
14. Well decommissioning (Bid Item 27).	Existing Bid Item 27 not completed yet
Punch List Total	**$11,000**

TJF/smp