Final Design Report/ Start-Up, Operation & Maintenance Manual Interim Remedial Measure Erdle Perforating Company Site NYSDEC Site #828072 Town of Gates, New York

Prepared for:

Erdle Perforating Company
100 Pixley Industrial Parkway
Rochester, New York

Prepared by:

Radian Engineering, Inc.
155 Corporate Woods, Suite 100
Rochester, New York 14623

March 31, 1997

Radian Engineering Inc.

Final Design Report/
Start-Up, Operation & Maintenance Manual
Interim Remedial Measure
Erdle Perforating Company Site
NYSDEC Site #828072
Town of Gates, New York

Prepared for:

Erdle Perforating Company
100 Pixley Industrial Parkway
Rochester, New York

Prepared by:

Radian Engineering, Inc.
155 Corporate Woods, Suite 100
Rochester, New York 14623

March 31, 1997

TABLE OF CONTENTS

Page

1.0 INTRODUCTION 1-1

1.1 Background 1-1
1.2 Summary of Site Conditions 1-1
1.3 Purpose 1-4
1.4 Discharge Permitting 1-5
1.4.1 Vapor Discharge Permitting 1-5
1.4.2 Request to Discharge to the Monroe County Pure Waters District Sewer 1-5
1.5 Manual Organization 1-6

2.0 COMPONENTS AND PROCESSES OF THE 2-PHASE™ EXTRACTION AND TREATMENT SYSTEM 2-1

2.1 Extraction Wells 2-2
2.1.1 Description 2-2
2.1.2 Major Components 2-3
2.1.3 Extraction Well Construction 2-3
2.2 Vacuum Extraction 2-4
2.2.1 Description 2-4
2.2.2 Major Components 2-5
2.2.3 Component Operation and Maintenance 2-5
2.3 Vapor Conditioning 2-6
2.3.1 Description 2-6
2.3.2 Major Components 2-6
2.3.3 Component Operation and Maintenance 2-8
2.4 Vapor Treatment 2-8
2.4.1 Description 2-9
2.4.2 Major Components 2-9
2.4.3 Component Operation and Maintenance 2-9
2.5 Water Treatment 2-10
2.5.1 Description 2-11
2.5.2 Major Components 2-11
2.5.3 Component Operation and Maintenance 2-12
2.6 Hazardous Waste Accumulation Area 2-13
2.7 System Controls 2-13

TABLE OF CONTENTS (Continued)

Page

3.0 SYSTEM OPERATIONS 3-1

3.1 Normal Operation 3-1
3.2 Alternate Operation 3-1
3.3 Emergency Operation and Fail-Safe Features 3-1
3.3.1 Power Failure 3-1
3.3.2 Fail-Safe Features 3-2
3.4 System Monitoring 3-2

4.0 SYSTEM START-UP AND SHUT-DOWN PROCEDURES 4-1

4.1 Pre-Start-Up Inspection 4-1
4.1.1 Extraction Wells 4-1
4.1.2 2-PHASE™ System 4-2
4.2 Cold-Start Procedure Following Extended Shut-Down of Both Vacuum Pumps 4-3
4.3 Cold-Start Procedure Following Extended Shut-Down of One Vacuum Pump 4-4
4.4 Start-Up Procedures Following a Short-term Shut-Down Period 4-5
4.5 Shut-Down Procedure for Extended Periods 4-5
4.6 Shut-Down Procedure for Short-Term Shut-Down Periods 4-6
4.7 Emergency Shut-Down Procedure 4-6

5.0 TROUBLESHOOTING 5-1

6.0 LOCK-OUT/TAG-OUT PROCEDURES 6-1

6.1 Emergency Procedures 6-2
6.2 Electrical Equipment Description 6-2
6.3 Energy Sources for Lock-Out/Tag-Out 6-3
6.3.1 Vacuum Pumps (P-201, and P-202) 6-3
6.3.2 Water Transfer Pumps (P-301) 6-4
6.3.3 Heater (EH-400) 6-4
6.3.4 Oil Circulation Pump (P-401) 6-4
6.3.5 Trailer Exhaust Fan (F-130) 6-5
6.3.6 Level Switches 6-5
6.3.7 Electrical Panel 6-6

TABLE OF CONTENTS (Continued)

Page

7.0 SAMPLING PROGRAM 7-1

7.1 Vapor Samples from Treatment Unit 7-1
7.2 Water Samples from Treatment Unit 7-3
7.3 Groundwater Samples from Monitoring Wells 7-4
7.4 Subsurface Soil Samples in the IRM Area 7-4
7.5 Quality Assurance/Quality Control Samples 7-6
7.6 Sample Containers, Handling, and Custody 7-6

8.0 MONITORING DATA EVALUATION AND REPORTING 8-1

8.1 Monitoring Data Evaluation 8-1
8.2 Operational Reporting 8-2

APPENDIX A MANUFACTURER'S OPERATIONS AND MAINTENANCE MANUALS

A-1: Manufacturer's Operations and Maintenance Manual for Vacuum Pumps
A-2: Manufacturer's Operations and Maintenance Manual for Heat Exchangers
A-3: Manufacturer's Operations and Maintenance Manual for Oil Circulation Pump
A-4: Manufacturer's Equipment Data Sheets for Vapor-Phase and Aqueous-Phase GACs
A-5: Manufacturer's Operations and Maintenance Manual for Water Transfer Pump

APPENDIX B PERMITS

B-1: Air Permit Application
B-2: Request to Discharge to Monroe County Pure Waters District Sewer

APPENDIX C HEALTH AND SAFETY PLAN

APPENDIX D MICROSEEPS SAMPLING PROCEDURE AND ANALYTICAL METHOD AM4.03

LIST OF FIGURES

		Page
3-1a	System Instrumentation Data Form	3-4
3-1b	System Instrumentation Data Form	3-5
3-2	Facility Inspection Log	3-6
3-3	Equipment Inspection Log	3-7
3-4	Drummed Material Inspection Log	3-8
7-1	Groundwater Sampling Form	7-5
7-2	Sample Chain of Custody	7-10
8-1	Weekly Summary Report	8-3
8-2	Monthly Summary Report	8-4

LIST OF TABLES

		Page
3-1	Normal Operating Limits of the 2-PHASE™ System	3-3
5-1	Troubleshooting Guide to the 2-PHASE™ Extraction and Treatment System	5-2
7-1	Sample Frequencies for Interim Remedial Measure	7-2
7-2	Field Quality Control Sample Matrix	7-7
7-3	Sample Containers and Hold Times	7-8

1.0 INTRODUCTION

1.1 Background

This document presents the Design Report and Start-up, Operation, and Maintenance plan for the proposed Interim Remedial Measure (IRM) at the Erdle Perforating Company (Erdle), located in the Town of Gates, New York. This document has been prepared to meet the requirements of Section V, Interim Remedial Measures, of the endorsed Administrative Order on Consent (AOC), Index Number B8-0185-87-05, between the New York State Department of Environmental Conservation (NYSDEC) and Erdle. The AOC addresses a Remedial Investigation and Feasibility Study of the site to characterize and eliminate health and environmental hazards attributable to the presence of volatile organic compounds (VOCs) in soils and groundwater under the site.

1.2 Summary of Site Conditions

Remedial Investigations (RIs) to date have identified a source area of residual VOCs from former underground storage tanks (USTs) which had held used solvent. These tanks were removed in 1987 by Day Engineering, in accordance with a NYSDEC-approved Work Plan. VOC migration from this source area has led to the presence of VOCs in groundwater downgradient (south) of the location of the former USTs, as shown on Drawing C-1 in the design drawing package. The RIs concluded that the principal site-related compounds of concern were volatile organic compounds (VOCs), specifically:

- Trichloroethene;
- 1,2-Dichloroethene;
- Vinyl Chloride;
- Xylenes; and
- Toluene.

These VOCs have been detected in soil samples from the overburden and groundwater samples from overburden and bedrock monitoring wells. The hydrogeology of the site consists of silty

clay glacial till overburden materials, underlain by calcareous bedrock of the Lockport Formation. Groundwater in the overburden flows southwest away from the former UST area, while bedrock groundwater flow is to the south. The overburden materials have a low hydraulic conductivity (averaging $3.4X10^{-5}$ cm/sec) while the bedrock is highly permeable (averaging $1.7X10^{-1}$ cm/sec). More-detailed information on the investigations performed to date and the site conditions is provided in the June 1995 report entitled "Remedial Investigation Report for Erdle Perforating Company, Site No. 828072" and the December 1996 report entitled "Phase II Remedial Investigation Report for Erdle Perforating Company, Site No. 828072."

To reduce future liabilities, Erdle has decided to proceed with an IRM to provide immediate protection to human health and the environment against continued migration of the compounds of concern from the source area. The IRM Program has been designed to meet the following objectives:

- Decrease the concentrations of the site-related compounds of concern in the overburden in the identified source areas;
- Reduce future migration of site-related compounds of concern via groundwater pathways, through hydraulic control of the overburden groundwater aquifer; and
- Reduce the scope of the final remediation program, if necessary, at the completion of the RI/FS Program.

The proposed IRM was described conceptually in the February 1996 report entitled "Interim Remedial Measure Work Plan, Erdle Perforating Company, Site No. 828072."

In order to accomplish the IRM objectives, the IRM Work Plan recommended and provided justification for using the 2-PHASE™ technology patented by Xerox Corporation. This relatively new technology uses a high vacuum to simultaneously extract liquid and vapor through a single pipe lowered inside of extraction wells installed in a contaminated area. This process has several advantages:

- Recovery is significantly improved in 2-PHASE™ Extraction wells, as groundwater is actively drawn into the well borehole under a high vacuum;
- With 2-PHASE™ Extraction, the water table is drawn down more effectively because of enhanced groundwater recovery, increasing the volume of the unsaturated zone;
- The increased unsaturated zone exposes more soils to vapor stripping, which is a more efficient process of contaminant removal relative to other methods;
- The application of high vacuum results in increased vapor and groundwater flow by enhancing the pressure/vacuum gradients in the subsurface; and
- The 2-PHASE™ Extraction process does not require the installation of remote groundwater pumps, controls, or other equipment normally required with conventional remedial methods.

The 2-PHASE™ Extraction system has been designed to remove the site-related compounds of concern from the saturated and unsaturated zones of the source area and will be focused on the overburden. By removing the source of these compounds, further movement from the unsaturated soils into the groundwater will be reduced, thereby decreasing further migration of these contaminants away form the source areas. As the process is expected to depress the overburden water table, residual contamination in the newly-expanded vadose zone will be exposed and then removed by vapor extraction. Contaminated groundwater that remains below the well screen will be drawn upward by the effects of the vacuum; this flushing action of groundwater from the shallow bedrock groundwater will remove residual contaminants below the base of the extraction wells. Additionally, the natural upward hydraulic gradient from the shallow bedrock to the overburden will be used to advantage, accentuating the upward flushing created by the 2-PHASE™ extraction system.

Another reason for applying 2-PHASE™ only to the overburden is that the high hydraulic conductivity and groundwater yield of the shallow bedrock groundwater flow zone would generate substantial quantities of groundwater, which would subsequently have to be managed. Also, the RI results indicate that the majority of the VOC mass exists in the overburden.

It is anticipated that the bedrock groundwater concentrations will decrease once the mass of contaminants in the overburden is diminished. Operational data collected during the IRM will confirm these conditions.

The 2-PHASE™ Extraction system will be operated for a period of six months; however, operation may be extended if necessary. During the operational period of the 2-PHASE™ Extraction system, system parameters will be continuously measured and monitored to track the IRM's effectiveness. Details of the proposed monitoring efforts are presented in Section 7. The IRM will be operated to decrease soils and groundwater concentrations. Site data will be obtained during the IRM to monitor soil and groundwater VOC reduction trends and, four months into operation, these data will be evaluated to ascertain when the contaminant mass removal rate will level off indicating that it is technically impracticable to continue operation. The final decision to terminate the IRM will take into account the standards, criteria, and guidelines for the site and the concentration reductions which will be achieved at that time.

1.3 Purpose

This Design Report/Construction, Operation and Maintenance (CO&M) Manual has been prepared to facilitate implementation of the IRM by providing guidance on the operation and maintenance of the 2-PHASE™ Extraction and treatment system, and containing project-specific information that will be used in the field to monitor the system's operation and the soil and groundwater conditions in the vicinity of the former UST. This manual also details the field sampling methods, laboratory analytical methods, and associated quality assurance/quality control (QA/QC) procedures.

1.4 Discharge Permitting

1.4.1 Vapor Discharge Permitting

Vapor emissions from the 2-PHASE™ Extraction process will be treated with granular activated carbon (GAC) to reduce emission levels to below New York State Air Guide 1 requirements. Permit application materials for the proposed vapor discharge have been prepared and are presented in Appendix B-1. Because the IRM is being conducted pursuant to an AOC, an air permit will not be required; however, the substantive requirements of the air permitting program will be met. Vapor VOC concentrations are expected to decrease as the IRM progresses. When verified by analytical results for the vapor samples from the inlet to the first vapor-phase GAC unit (described in Section 7), and if approved by the NYSDEC, vapors from the 2-PHASE™ process may be discharged directly into the atmosphere.

The permit application materials are based on anticipated vapor emissions of trichloroethene, 1,2-dichloroethene, and vinyl chloride. While xylenes and toluene were also detected during the RIs, the concentrations of xylenes and toluene present were below the applicable standards, criteria, and guidelines. Also, xylenes and toluene were not detected in overburden groundwater during the most-recent sampling of the site. Therefore, only the three major VOCs present in the subsurface at the site (i.e. trichloroethene, 1,2-dichloroethene, and vinyl chloride) were considered to be potentially subject to air discharge regulation.

1.4.2 Request to Discharge Water to the Monroe County Pure Waters District Sewer

Groundwater extracted by the 2-PHASE™ Extraction will first be vacuum stripped as it is brought to the surface in the drop pipes of the system. This will remove up to 95% of the VOCs from the groundwater. The groundwater will be separated from the vapor in the mobile 2-PHASE™ Extraction trailer and will be treated with granular activated carbon before discharge to the Monroe County Pure Waters District (MCPWD) sewer via a sanitary drain in the Erdle facility. A request for permission to discharge to the MCPWD sewer has been submitted; a copy of this request is presented in Appendix B-2. Extracted groundwater from the

IRM will be treated to reduce VOCs in the 2-PHASE™ discharge water to below the MCPWD requirements.

1.5 Manual Organization

Sections 2.0 through 6.0 of this O&M Manual describe the design, operation, and maintenance of the 2-PHASE™ extraction and treatment system's components. This information includes the manufacturer, control specifications, troubleshooting, Lock-Out/Tag-Out, etc., for each of the system components.

Section 7.0 presents the system monitoring and sampling procedures which will be used to evaluate the system's effectiveness in removing subsurface contamination. Included in this section are the water and vapor sampling procedures which will be used to monitor the system's operation and satisfy the regulatory requirements for the discharge of treated groundwater and vapors.

Design plans for the 2-PHASE™ IRM are presented in the attached design drawings package. Operation and maintenance manuals provided by the manufacturers of the 2-PHASE™ extraction and treatment system's components are included in Appendix A of this O&M Manual. The vapor discharge permit application and the request to discharge to the MCPWD sewer are presented in Appendices B-1 and B-2, respectively. The Health and Safety Plan for the IRM is presented in Appendix C. The Microseeps sampling procedure and analytical Method AM4.03 for vapor sampling are presented in Appendix D.

2.0 COMPONENTS AND PROCESSES OF THE 2-PHASE™ EXTRACTION AND TREATMENT SYSTEM

The 2-PHASE™ IRM will consist of an extraction well network, a 2-PHASE™ Extraction trailer, and an onsite treatment system. Extraction wells designed to target the overburden source area will be constructed when the IRM is implemented. The 2-PHASE™ Extraction system is self-contained in an 18-foot trailer that will be fully operational when connected to utilities and piping. The 2-PHASE™ trailer and ancillary equipment to be used on this site was selected based on three criteria: 1) the site geology; 2) the expected water and vapor production from each extraction well; and 3) the availability of equipment. The construction of the 2-PHASE™ extraction system was performed by B&A Environmental Services Company (B&A). B&A is a specialty environmental contractor knowledgeable of the 2-PHASE™ equipment and process. The treatment system will be constructed onsite in the Erdle Perforating building under the supervision of Radian.

A total of four extraction wells are proposed for the IRM and will be installed at the locations shown on Drawing C-2 in the design drawing package. These extraction wells will be screened only in the overburden material and are positioned to develop a vacuum influence within the entire source area. Detailed information on the design and construction of the extraction wells is presented in the following section.

The 2-PHASE™ extraction and treatment system consists of four individual unit processes, as follows:

- The *vacuum extraction process* produces a high vacuum to remove liquid and vapor from the subsurface and separates the phases for subsequent treatment and discharge;
- The *vapor conditioning process* decreases the relative humidity of the vapor stream so that carbon adsorption may take place more efficiently;
- The *vapor treatment process* removes organic contaminants from the vapor stream through adsorption onto a granular activated carbon medium; and

- The *water treatment process* removes suspended solids and organic contaminants from the liquid stream through adsorption onto a granular activated carbon medium.

The general layout of the treatment system, with relation to the site, is presented on Drawing C-2 in the design drawing package. The process flow directions associated with the 2-PHASE™ Extraction process is presented in the process and instrumentation diagram (Drawing I-1) in the design drawing package. The operation, control and maintenance of each of these processes is described in this section. The troubleshooting of typical process operating problems is addressed in Section 5.0.

2.1 Extraction Wells

2.1.1 Description

The extraction wells are designed to focus the vacuum extraction effort on the low-permeability overburden materials. A wirewound screen design will be used to promote well efficiency. Wells will be screened across the deeper portions of the overburden to facilitate dewatering of the overburden and to prevent short-circuiting of vacuum to the surface. The bottom of the wells will be completed approximately 2 feet above the bedrock-overburden interface to prevent excessive influx of water from the shallow bedrock groundwater flow zone.

The location of the wells throughout the source area was based on an assumed vacuum radius of influence of 25 ft. This radius of influence was derived from Radian's 2-PHASE™ operational experience at other sites with similar hydrogeologic conditions. Significant groundwater drawdown is also expected to develop as the 2-PHASE™ system operation progresses. Typically the groundwater radius of influence of 2-PHASE™ extraction is substantially greater than the vacuum radius of influence. Radius-of-influence will be determined by collecting vacuum and water-level data from nearby existing monitoring wells. As overburden soils are dewatered, the subsurface contaminant removal via the vapor phase is expected to be the

dominant contaminant mass transfer mechanism. Therefore, the extraction well network was designed to optimize subsurface vapor removal.

2.1.2 Major Components

The major components associated with the four (4) extraction wells are:

- The extraction wells consisting of PVC screen and riser pipe; and
- Extraction well surface completion box and piping connections.

Extraction well design and surface completion details are shown on Drawing P-1. Well construction procedures are presented below.

2.1.3 Extraction Well Construction

The extraction wells will be drilled with 6-in ID hollow stem augers to a total depth of approximately 11 feet. The screened interval of the extraction wells will extend from 11 to 6 feet below ground. Wells will be constructed of 4-in ID PVC riser and 0.020-in slot wirewound PVC screen. The screened interval will be backfilled with #0 Morie silica sand or equal. The filter zone will be sealed with a bentonite slurry/Benseal® grout, placed in the borehole via tremie, followed by tremied neat cement/bentonite grout. The wells will be completed at the surface with a 2-foot by 2-foot concrete pad and a type 4X Hoffman enclosure. Following installation, extraction wells will be developed using a pump or surge block and bailer to remove heavy sediment and to promote an effective connection between the well and the overburden.

Soil cuttings from the well installation will be spread over the former UST excavation, covered with topsoil, and seeded per the requirements of NYSDEC Technical and Administrative Guidance Memorandum (TAGM) #4032. Development water will be contained in 55-gallon drums and processed through the 2-PHASE™ Extraction system after system start-up.

2.2 Vacuum Extraction

2.2.1 Description

The vacuum extraction process removes groundwater and vapor from the subsurface via extraction wells through the application of a high vacuum. The vacuum will be induced through the operation of two liquid-ring vacuum pumps. Both groundwater and soil vapor will be extracted in the form of two-phase flow. The water phase is separated from the vapor phase in the system's inlet separator.

An extraction system tailored to the Erdle site conditions was selected from Radian's fleet of mobile 2-PHASE™ Extraction trailers. Vapor flow rates of up to 200 standard cubic feet per minute (scfm) and water flow rates of up to 25 gallons per minute (gpm) can be handled by the system. Based on site conditions, actual vapor flow rates are expected to range from 10 to 30 scfm per well (i.e., total system flow ranging from 40 to 120 scfm for 4 wells). Water flow will range from 1 to 5 gpm per well, for a total system flow ranging up to 20 gpm for 4 wells. Excess system capacity is available for additional extraction wells during the IRM, if needed.

Vacuum levels in the system may reach 28 inches of mercury (in-Hg). However, flow rate is inversely proportional to vacuum level; therefore, if higher vacuum levels are induced in the subsurface formation due to low permeability sediments, then lower system flow rates will be observed. Note that the vapor flow is divided evenly among the operating pumps and each portion of flow is processed separately through its respective vacuum pump.

2.2.2 Major Components

The major components associated with the vacuum extraction process include:

- Inlet separator
- Two liquid ring vacuum pumps

The layout of this equipment within the trailer is presented on Drawing M-1 in the design drawing package. Details of each component are presented below.

Inlet Separator

Manufacturer:	Travaini Pumps, USA
Liquid Capacity:	120 gallons

Vacuum Pumps (2)

Manufacturer:	Travaini Pumps, USA
System Model:	TRO300V-1A-XP
Pump Model:	TRVA65-450/1C/GH
Motor Horsepower:	20
Power:	480 VAC, 3-phase
Vapor Capacity (each):	100 scfm

2.2.3 Component Operation and Maintenance

Inlet Separator

A manufacturer's operation and maintenance manual was not included with the inlet separator. However, little O&M should be necessary.

Vacuum Pumps (2)

The operations and maintenance manual provided by the manufacturer for the vacuum pumps is located in Appendix A-1.

2.3 Vapor Conditioning

2.3.1 Description

The vapor conditioning process is designed to lower the relative humidity of the vapor stream prior to treatment with granular activated carbon. As the saturated vapor extracted from the subsurface is compressed in a vacuum pump, heat is produced and absorbed by both the vapor and the seal oil (pump sealing fluid). The hot vapor is discharged to a seal oil reservoir/knock-out pot where it is separated from any entrained seal-oil droplets carried over from the compression stage. The vapor from each vacuum pump is then combined and passed through an air-to-air heat exchanger where it undergoes primary cooling. After passing through the primary heat exchanger, the vapor stream passes through an air-to-water heat exchanger for secondary cooling. Water vapor is condensed out of the vapor stream in both cooling stages and is separated from the vapor in a condensate knock-out pot just after the air-to-water heat exchanger. The cooled vapor is then re-heated in an oil-to-air heat exchanger to produce a final vapor stream with a lower relative humidity than that exiting the vacuum pump.

2.3.2 Major Components

The major components associated with the vapor conditioning process are:

- 1 Air-to-air heat exchanger
- 1 Air-to-water heat exchanger
- 1 Oil-to-air heat exchanger
- 1 Water transfer pump
- 1 Oil circulating pump

The layout of this equipment within the trailer is presented on Drawing M-2 in the design drawing package. Details of each component are presented below.

Air-to-Air Heat Exchanger (1)

Manufacturer:	Motivair
Model:	AC0350-S
Fan Diameter:	18 inches
Air Flow:	2500 scfm
Motor Horsepower:	1/2 HP
Power:	120 VAC, single-phase

Air-to-Water Heat Exchanger (1)

Manufacturer:	Motivair
Model:	CSC0860BY1
Water Flow:	4 gpm
Air Flow:	200 scfm

Oil-to-Air Heat Exchanger (1)

Manufacturer:	Motivair
Model:	CSC0836BY1
Oil Flow:	4 gpm
Air Flow:	200 scfm

Water Transfer Pump

Manufacturer:	Robbins and Meyers
Pump Type:	Single-stage close coupled progressive cavity pump
Construction:	Cast iron housing
Model:	BIE-CDQ-SAA
Motor Horsepower:	1.5 HP
Power:	230/460 VAC, 3-phase, 60 Hz
Revolutions per minute:	360 RPM

Oil Circulation Pump

Manufacturer:	Price
Pump Type:	Close coupled centrifugal pump
Construction:	Bronze
Model:	LT25-AB-225-21-211-33-35-1X60
Motor Horsepower:	1/3 HP
Power:	120 VAC, single phase
Revolutions per minute:	3450 RPM

2.3.3 Component Operation and Maintenance

Air-to-Air Heat Exchanger (1)

The operations and maintenance manual provided by the manufacturer for the air-to-heat exchanger is located in Appendix A-2.

Air-to-Water Heat Exchanger (1)

A manufacturer's operations and maintenance manual was not included for the air-to-water heat exchanger, however, little O&M should be necessary.

Oil-to-Air Heat Exchanger (1)

A manufacturer's operations and maintenance manual was not included for the oil-to-air heat exchanger, however, little O&M should be necessary.

Water Transfer Pump

The operations and maintenance manual provided by the manufacturer for the water circulation pump is located in Appendix A-5.

Oil Circulation Pump

The operations and maintenance manual provided by the manufacturer for the oil circulation pump is located in Appendix A-3.

2.4 Vapor Treatment

The major components associated with the vapor treatment process are:

- Two vapor-phase granular activated carbon (GAC) canisters.

Activated carbon will be used as it was determined to be the most cost effective method of treating the contaminated vapor stream.

2.4.1 Description

After the relative humidity of the vapor stream has been lowered, the vapor stream will pass through two 1,800-pound granular activated carbon units connected in series to remove organic contaminants via adsorption. The treated vapor will then be discharged to the atmosphere.

As the concentrations of contaminants in the vapor phase decline, the vapor emissions will likely decrease to below NYSDEC guideline levels. When verified by the analytical results for the vapor samples from the inlet to the first vapor-phase GAC unit, approval will be obtained from the NYSDEC to take both vapor-phase GAC units off line. The vapors will then be discharged directly to the atmosphere.

2.4.2 Major Components

The major component associated with the vapor treatment process is the vapor phase granular activated carbon units. The location of the vapor phase carbon units is shown on Drawing C-2 (General System layout) in the design drawing package.

Vapor-Phase Granular Activated Carbon Units (2)

Supplier:	Carbtrol Corporation
Model:	G-6
Capacity:	up to 600 scfm
Carbon Load:	1,800 pounds per bed
Carbon Type:	CSV
Carbon Size:	4x8 (US Sieve)

2.4.3 Component Operation and Maintenance

Vapor-Phase Granular Activated Carbon Units (2)

The manufacturer's equipment data sheets for the vapor-phase GAC units are located are Appendix A-4.

When a vapor phase GAC has been loaded to the point of breakthrough, a change-out of the spent canister will be required. Breakthrough is defined as the point at which the quantifiable concentration of VOCs detected at the outlet of the carbon bed exceeds the quantifiable concentration at the inlet (to be determined by the monitoring program described in Section 7.0), and may be less than or equal to the maximum absorption capacity of the canister.

When breakthrough conditions are observed at the primary vapor phase GAC, the carbon canister should be changed-out. This will be accomplished by the following procedure:

a) Shut the 2-PHASE™ system down using the red STOP button on the wall of the trailer.
b) Remove the primary GAC canister from operation and label is as follows:
   - Place a "HAZARDOUS WASTE" label on the canister and fill in all appropriate blanks.
   - Place a DOT Primary Shipping Label on the canister designating it as MISCELLANEOUS DANGEROUS GOODS.
c) Place the GAC canister from the secondary position in the primary position.
d) Place the new canister in the secondary position.
e) Re-start the 2-PHASE™ system as detailed in Section 4.1.2.
f) Install plugs in the inlet and outlet ports in preparation for shipping.

All used vapor carbons will be stored in the hazardous waste accumulation area located inside the plant in the storage room adjacent to the treatment room. Waste will be stored on site for no more than 90 days from the date on which the waste was generated (carbon change-out date).

2.5 Water Treatment

The major components associated with the water treatment process are:

- 1 Bag filter
- 4 Aqueous phase granular initiated carbon units

Activated carbon will be used as it was determined to be the most cost effective method of treating the contaminated water system.

The location of the bag filter is shown on Drawing M-2 (Mobile 2-PHASE™ Trailer Layout) in the design drawing package. The location of the aqueous phase carbon units is shown on Drawing C-2 (General System Layout) in the design drawing package.

2.5.1 Description

After the water stream is isolated in the inlet separator, it will be pumped through bag filters to remove suspended solids and then pumped through the air-to-water heat exchanger for cooling water purposes. The liquid stream will then be passed through two parallel trains of two 200-pound aqueous-phase GAC units connected in series for organic contaminant removal. After passing through the carbon units, the effluent will be discharged to the sanitary sewer.

2.5.2 Major Components

Bag Filter (1)

Manufacturer:	ISP
Vessel Model:	LD-1-BSL
Vessel Construction:	316 Stainless Steel
Filter Model:	PE25US-P2S-H
Filter Construction:	25 Micron Polyester
Flow Capacity:	80 GPM
Maximum Operating Pressure:	85 psi

Aqueous-Phase Granular Activated Carbon Units (4)

Supplier:	Carbtrol Corporation
Model:	L-1
Capacity:	10 gpm for sufficient residence time
Carbon Load:	200 pounds per bed
Carbon Type:	CSL
Carbon Size:	8x30 (US Sieve)

2.5.3 Component Operation and Maintenance

Bag Filter (1)

A manufacturer's operation and maintenance manual was not included for the bag filters; however, little operation and maintenance should be necessary other than changing out the bag when the pressure at the inlet of the bag filter exceeds 50 psi.

Aqueous-Phase Granular Activated Carbon Units (4)

The manufacturer's equipment data sheets for the aqueous-phase GAC units are located in Appendix A-4.

When a liquid phase GAC has reached its maximum adsorption capacity, a change-out of the spent canister will be required. Maximum adsorption capacity, commonly called breakthrough, is defined as the point at which the concentration of VOCs detected at the outlet of the carbon exceeds the concentration at the inlet (to be determined by the monitoring program described in Section 7.0).

When breakthrough conditions are observed at the primary carbon canister, the following procedure should be followed:

1. De-gas a new carbon canister in preparation for change-out. For complete instructions on carbon degassing, refer to the document "Installation and Operating Instructions, Carbtrol® L-1 Liquid Phase Canisters" located in Appendix A of this manual.

2. Shut down 2-PHASE™ system using the red STOP button on the wall of the trailer.

3. Remove the spent primary carbon and replace it with the carbon from the secondary position. Label this carbon as follows:
   - Place a "HAZARDOUS WASTE" label on the canister and fill in all appropriate blanks.
   - Place a DOT Primary Shipping Label on the canister designating it as MISCELLANEOUS DANGEROUS GOODS.

4. Install the new carbon in the secondary position.

5. Re-start the 2-PHASE™ system as detailed in Section 4.1.2.

6. Completely drain all water from the spent carbon. This will be accomplished by the following procedure:

a) Remove the 3/4" drain bung on the lower side and place a bucket under the port.
b) Puncture the plastic drum lining with a sharp object and collect the discharge water in the bucket.
c) Replace the 3/4" drain bung.
d) Process all water through the 2-PHASE™ systems using the suction wand located at the inlet separator.

7. Install plugs in the inlet and outlet ports in preparation for shipping.

All used water carbon canisters will be stored in the hazardous waste accumulation area located inside the plant in the storage room adjacent to the treatment room. Waste will be stored on site for no more than 90 days from the date on which the waste was generated (carbon change-out date).

2.6 Hazardous Waste Accumulation Area

The Hazardous Waste Accumulation Area will be located inside the plant in the storage room adjacent to the treatment room. The area will be approximately 15 feet by 15 feet and shall be outlined on the floor with grey duct tape. A sign labeled "HAZARDOUS WASTE ACCUMULATION AREA" will be posted near the area.

2.7 System Controls

Operating temperatures, pressures and fluid levels are maintained using appropriate instrumentation, transducers, and control valves located at key control points. Any signals detected above normal operating limits within any process will cause the entire system to shut down. After the alarm condition is acknowledged and corrected by the operator, the system can then be manually restarted. Controls and system interlocks are illustrated on the process and instrumentation diagram (Drawing I-1) located in the design drawing package.

3.0 SYSTEM OPERATIONS

3.1 Normal Operation

During normal operation of the 2-PHASE™ extraction and treatment system, either one or both of the vacuum pumps may be in operation at a given time, based on subsurface conditions, liquid and vapor flow rates, and system status. The maximum anticipated water production rate is 20 gpm and the maximum anticipated vapor flow rate is 100 scfm. The system is capable of fully automated operation but will be checked periodically by an operator to ensure proper operation and for preventative maintenance.

3.2 Alternate Operation

Because no emergency power will be supplied to the 2-PHASE™ extraction and treatment system, there is no alternate operation during power failure. The system must be manually restarted after a power failure.

3.3 Emergency Operation and Fail-Safe Features

3.3.1 Power Failure

Because there is no emergency power, the 2-PHASE™ extraction and treatment system will be shut down during a power failure. In the event of cold weather, care should be taken to prevent the system's temperature from falling below freezing as this may cause water-containing process lines and vessels to freeze and burst. In the event of a prolonged shut down, process lines and equipment should be drained of all condensate/water. The system must be manually restarted after a power failure.

3.3.2 Fail-Safe Features

The 2-PHASE™ extraction and treatment system is interlocked with many fail-safe features. Temperature, pressure and level-sensing devices are installed at all key control locations and are configured to trigger an automatic system shut down in the event that signals above normal operating limits are detected. Normal operating limits for the 2-PHASE™ extraction and treatment system are presented in Table 3-1.

3.4 System Monitoring

Operators will be on site each day during the first week of operation to check for proper operation of all system components and to phase in operations of the extraction wells. After the first week of operation, an operator will visit the site once during each week to monitor the system's operation. During routine system monitoring, the operator will record operating parameters on system instrumentation data forms. An example of this form is presented in Figures 3-1a and 3-1b. The operators will also perform weekly inspections of the integrity of the treatment facility (i.e., inspect for leaks, corrosion, etc.), the presence and integrity of emergency equipment, and the presence and integrity of any drummed materials. Operators will record their findings on facility inspection logs, equipment inspection logs, and drummed material inspection logs, which are presented in Figures 3-2, 3-3, and 3-4, respectively.

Table 3-1

Normal Operating Limits of the 2-PHASE™ System

Location	Description	Units	Skid	System
Pressure Readings	Pressure, Seal Oil Reservoir	psig	<5	
	Pressure, Outlet of Oil Circulation Pump	psig	<25	
	Pressure, Inlet to Bag Filters	psig		<50
	Pressure, Outlet of Bag Filters	psig		<25
	Pressure, Inlet to Aqueous-Phase GAC #1	psig		<10
	Pressure, Outlet of Aqueous-Phase GAC #1	psig		<10
	Pressure, Outlet of Aqueous-Phase GAC #2	psig		<10
Temperature Readings	Vapor Temperature, Outlet of Vacuum Pump	°F	<180	

Note: System will be shut down in the event that signals above normal operating limits are detected.

System Instrumentation Data Form

(Page 1 of 2 Pages)

Date: _____ **Time:** _____

Measurement	Description	Units	Vacuum Pump #1	Vacuum Pump #2	System
Run Time	Hour Meter Reading	hours			
Vapor Flow	Vapor Flow Meter #1	acfm			
	Vapor Flow Meter #2	acfm			
	Vapor Flow Meter #3	acfm			
	Vapor Flow Meter #4	acfm			
	Total Volumetric Flow	acfm			
Water Flow	Water Totalizer Reading	gallons			
Vacuum/ Pressure Reading	Vacuum at Inlet Separator	in-Hg			
	Vacuum at Pump Inlets	in-Hg			
	Pressure, Seal Oil Reservoirs	psig			
	Pressure, Outlet of Oil Circulation Pump	psig			
	Pressure, Inlet to Bag Filters	psig			
	Pressure, Inlet to Aqueous-Phase GAC #1	psig			
	Pressure, Outlet of Aqueous-Phase GAC #1	psig			
	Pressure, Outlet of Water Transfer Pump	psig			
	Pressure at Stack	psig			
Temperature Readings	Temperature at Inlet Separator	°F			
	Temperature at Outlet of Vacuum Pumps	°F			
	Temperature at Outlet of Air-to-Air HEX	°F			
	Temperature at Outlet of Water/Air HEX	°F			
	Temperature at Outlet of Oil/Air HEX	°F			
	Temperature Inside Trailer	°F			
	Temperature of Ambient Air outside Trailer	°F			
	Temperature at Stack	°F			

Figure 3-1a. System Instrumentation Data Form

System Instrumentation Data Form

(Page 2 of 2 Pages)

Date: _____ **Time:** _____

Location	Description	Units	EW-1	EW-2	EW-3	EW-4
Extraction Wells	Well in Operation? (Yes/No)	—				
	Vacuum at Well Head	in-Hg				
	Straw Tip Depth Below PVC	ft				
	Aspiration Air Valve Position	—				

Samples Collected(?): Inlet First Aqueous-Phase GAC (W1) __ Outlet First Aqueous-Phase GAC (W2)__ Outlet Second Aqueous-Phase GAC (W3) __
Inlet First Vapor-Phase GAC (V1) __ Outlet First Vapor-Phase GAC (V2) __ Outlet Second Vapor-Phase GAC (V3) __

QA/QC Samples Collected(?): _____

Other Samples Collected(?): _____

Inspector: _____ (Print)

_____ (Signature)

Comments: _____

_____

_____

Figure 3-1b. System Instrumentation Data Form

Facility Inspection Log

2-PHASE™ TRAILER	Yes	No
Deterioration of floor, curbing, or walls/roof (e.g., cracks, spalling, corrosion)		
Deterioration of equipment in facility (e.g., corrosion)		
Deterioration of piping or valves (e.g., cracks, seeps)		
Any signs of releases from equipment in facility (e.g., seeps, standing water, staining)		
Ventilation system working?		
Any unusual odors or smells?		
Comments: _____		

VAPOR AND LIQUID PHASE TREATMENT AREA	Yes	No
Deterioration of vapor-phase GACs (e.g., corrosion, seeps)		
Deterioration of concrete slab (e.g., cracks, corrosion)		
Deterioration of piping or valves (e.g., cracks, seeps)		
Any signs of releases from vapor-phase GACs, piping, valves		
Deterioration of liquid phase GACs (e.g., corrosion, seeps)		
Deterioration of concrete slab (e.g., cracks, corrosion)		
Deterioration of piping or valves (e.g., cracks, seeps)		
Any signs of releases from liquid-phase GACs, piping, valves		
Deterioration of secondary containment (e.g., cracking)		
Comments: _____		

Date: _____

Inspector: _____ (Print)

_____ (Signature)

Figure 3-2. Facility Inspection Log

Equipment Inspection Log

EMERGENCY AND MONITORING EQUIPMENT	Yes	No
ABC Fire Extinguishers charged		
Telephone in operating condition		
All Alarms functioning		
Comments: _____		

SPILL RESPONSE EQUIPMENT	Quantity
Absorbent materials	
Containment pillows/pads	
Nitrile gloves and rubber boots	
Tyvek coveralls	
Safety goggles	
Comments: _____	

Date: _____

Inspector: _____ (Print)

_____ (Signature)

Figure 3-3. Equipment Inspection Log

Drummed Material Inspection Log

Contents	Quantity	Labeled (Yes/No)	Leaks (Yes/No)	Closed (Yes/No)
Soil				
Groundwater				
Decon. Water				
Personal Protective Equipment				
Other				
Empty				
Comments: _____				

Date: _____

Inspector: _____ (Print)

_____ (Signature)

Figure 3-4. Drummed Material Inspection Log

4.0 SYSTEM START-UP AND SHUT-DOWN PROCEDURES

4.1 Pre-Start-Up Inspection

Before initial start-up of the 2-PHASE™ system, a complete inspection of the 2-PHASE™ system and all ancillary equipment shall be performed. Tasks to be performed are discussed in the following subsections.

4.1.1 Extraction Wells

Prior to start-up of the extraction wells, the following items will be visually inspected and checked for completeness:

1. The general condition of the well casings, wellhead fittings, and piping from the wells to the 2-PHASE™ system shall be inspected for defects and deficiencies and corrected prior to start-up.

2. The ball valves used for turning the extraction wells on and off shall be completely closed.

3. The aspiration air valve on the wellhead shall be completely closed.

4. The locking boxes installed at each extraction well shall be inspected for proper installation and to ensure that each box is supplied with a lock.

5. Static water levels from each of the extraction wells and all monitoring wells shall be collected.

6. Piping will be checked to verify that it is properly supported.

7. Piping insulation and lagging will be checked to verify that it is attached and in good repair.

4.1.2 2-PHASE™ System

The following items will be performed prior to start-up of the 2-PHASE™ system:

1. All flanges and fittings that connect process piping to the 2-PHASE™ system shall be inspected for defects and proper installation. Any deficiencies shall be corrected prior to start-up.

2. All electrical connections to the trailer and ancillary equipment shall be checked to ensure that they have been made in accordance with all applicable electrical codes.

3. The pump motor shall be bump tested for proper rotation.

4. Drain valve on inlet separator and bag filter is closed.

5. The valve from the inlet separator to the water transfer pump, and the valve from the pump to the bag filter is opened completely.

6. The inlet separator shall be filled with city water and then emptied via the water transfer pump, checking operation of the level switches, including the high-high level switch. All piping and equipment associated with water transfer (i.e. piping from inlet separator to GACs, piping from GACs to sanitary sewer tie-in, liquid phase GACs, etc.) shall be inspected for leaks and any deficiencies shall be corrected prior to start-up.

7. Fluid levels in both seal oil reservoirs shall be checked to ensure that they are at the correct operating levels.

8. The system shall be started in accordance with the procedure outlined in section 4.2 below entitled, Cold-Start Procedure Following Extended Shut-Down of Both Vacuum Pumps.

4.2 Cold-Start Procedure Following Extended Shut-Down of Both Vacuum Pumps

This cold-start procedure should be followed whenever both of the vacuum pumps have been shut down for an extended period of time, such that the seal oil temperature has dropped below 130°F. This procedure is described as follows:

1. All extraction wells are turned off, and the butterfly valve on the vacuum header, just after the outlet of the inlet separator, is closed. The isolation valve between pumps are also closed.

2. The ambient air bleed valve on each of the vacuum pumps is opened slightly.

3. The valve on the oil circulation loop for each of the vacuum pumps is opened to allow the oil to circulate through the oil-to-air heat exchanger.

4. The valve on the piping from the first vacuum pump seal oil reservoir to the oil circulation pump is opened fully. The same valve on the second vacuum pump is completely closed.

5. The valve from the bag filter to the aqueous-phase carbon units, the valves between the aqueous-phase carbon units, and the valves between the second aqueous-phase carbon units and the sanitary sewer tie-in, are all opened completely.

6. The switch for the transfer pump is in the "AUTOMATIC" position on the control panel set.

7. The switch for the exhaust fan is set to "ON". At this point, all disconnects for equipment should be in the ON position. All circuit breakers should be in ON position.

8. The vacuum pumps are started one at a time and are run on ambient air for approximately 30 minutes to allow the oil in the seal oil reservoir to reach operating temperature (150-160°F).

9. Once the oil has reached operating temperature, the well isolation valve at an extraction well is opened. Next, the butterfly valve on the outlet of the inlet separator and the isolation valves between the pumps are opened. Vapor flow, vacuum readings at the inlet separator, and other process parameters should be monitored to ensure that they are all within operating range.

10. If all operating parameters are within operating range, extraction wells are turned on sequentially at approximately 5 minute intervals. As more wells are brought on line, the ambient air bleed valve at the vacuum pumps are slowly closed until the system in running entirely on the extraction wells.

4.3 Cold-Start Procedure Following Extended Shut-Down of One Vacuum Pump

This cold-start procedure should be followed whenever one of the vacuum pumps have been shut down for an extended period of time, such that the seal oil temperature has dropped below 130°F. This procedure is described as follows:

1. The isolation valve on the shut-down pump is closed.
2. The ambient air bleed valve on the shut-down pump is opened slightly.
3. The valve on the oil circulation loop for the shut-down pump is opened to allow the oil circulation through the oil-to-air heat exchanger.
4. The valve on the piping from the vacuum pump seal oil reservoir to the oil circulation pump is opened fully.
5. The bypass valve on the shut-down pump air-to-air heat exchanger is closed to ensure that the vapor flow from the vacuum pump is routed through the heat exchanger.
6. The pump is started and is run on ambient air for approximately 30 minutes to allow the oil in the seal oil reservoir to reach operating temperature (150-160°F).
7. Once the oil has reached operating temperature, the isolation valves are opened. Vapor flow, vacuum readings at the inlet separator, and other process parameters should be monitored to ensure that they are all within operating range.
8. If all operating parameters are within operating range, the ambient air bleed valve at the vacuum pump is slowly closed until the system in running entirely on the extraction wells.

4.4 Start-Up Procedures Following a Short-Term Shut-Down Period

The start-up procedure presented below should be followed only if the vacuum pumps have been shut down for a limited time period, such that the seal oil is still within operating range. This procedure is described as follows:

1. The well isolation valves at the well-heads of the various extraction wells are closed on two of the four extraction wells.
2. The vacuum pumps are sequentially brought on line. Operating parameters are monitored to ensure that they are within normal operating range.
3. Once the operator is satisfied that the system is running normally, the remaining two extraction wells are brought on line sequentially at approximately 5 minute intervals.

4.5 Shut-Down Procedure for Extended Periods

The following shut-down procedure presented below should be adhered to when an extended shut-down period is anticipated.

1. The well isolation valves will be closed and the union furthest away from each well-head shall be slightly opened to allow ambient air to enter the system. The system shall be run in this configuration for approximately 5 minutes to purge the lines of any and all free-standing water.
2. The vacuum pumps will be turned off.
3. The inlet separator will be drained and flushed with clean water.
4. The air-to-air heat exchanger, air-to-water heat exchanger, and condensate knock-out pot will be drained of water.
5. The bag filter will be cleaned and/or changed out and drained.

4.6 Shut-Down Procedure For Short-Term Shut-Down Periods

When shutting the vacuum pumps down for short durations, the pumps may simply be turned off using the red STOP button located on the wall of the trailer. No other actions are required.

4.7 Emergency Shut-Down Procedure

In case of emergency, the 2-PHASE™ extraction and treatment system may be shut down using the red STOP button located on the wall of the trailer. No other actions are required.

5.0 TROUBLESHOOTING

Table 5-1 outlines typically encountered system operation problems, probable causes, and corrective actions. Additional troubleshooting procedures for individual system components are described in the manufacturer's literature in Appendix A.

Table 5-1 (Continued)

Troubleshooting Guide to the 2-PHASE™ Extraction System

Alarm Condition	Probable Causes	Corrective Action Required
Vacuum Pump Overload	Plugging of air-to-air heat exchanger with condensed water	Restart skid and monitor backpressure at seal oil reservoir. If pressure is higher than normal operating range, drain air-to-air heat exchanger. Restart skid and monitor backpressure. If pressure is within operating range, problem is solved.
	Plugging of coalescing filter	Replace coalescing filter
	Pump flooded with seal oil	Consult manufacturer's operation and maintenance manual in Appendix A-1.
	Worn bearings	Consult manufacturer's operation and maintenance manual in Appendix A-1.
High Oil Level	Water in seal oil reservoir	Drain water from seal oil reservoir.
Low Oil Level	Oil carryover from seal oil reservoir is occurring	Check condition of coalescing filter. Replace as necessary. Check gaskets within reservoir. Replace as necessary. Add seal oil to fill line on reservoir.
	Pipe leaks on seal oil circulation loop	Tighten piping. Add seal oil to fill line on reservoir.
High Temperature	Insufficient cooling of seal oil	Clean fins of oil-to-air heat exchanger. Clean Y-strainer in seal oil line.
High Water Level Condensate Knock-out Pot	Stuck ball float valve	Check ball float valve.
	Dirty level switch/water slugging	Check water level in knock-out pot. If level is low, shut down was possibly due to a dirty level switch. If level is high, drain water out of knock-out pot until alarm light on control panel goes out. Drain the air-to-air heat exchangers. Restart system and monitor fluid level in the knock-out pot. If system does not shut down due to high level after approximately 45 minutes, it is quite probable that the cause of the shut down was a slug of water from the air-to-air heat exchangers suddenly entering the knock-out pot.
Oil Circulation Pump Overload	Blockage within oil circulation piping	Check piping for blockage. Remove any obstructions.
	Worn pump bearings	Consult manufacturer's operation and maintenance manual in Appendix A-3.

Table 5-1 (Continued)

Troubleshooting Guide to the 2-PHASE™ Extraction System

Alarm Condition	Probable Causes	Corrective Action Required
Vapor-Phase Carbon High Backpressure	Blockage within carbon vessels	Check piping to carbon vessels for blockage. Change out primary vapor-phase carbon, if necessary.
Water Transfer Pump Overload	Blockage in piping between pumps and bag filters	Check piping for blockage. Remove any obstruction.
	Valve before pump inlet and/or valve at pump outlet closed	Reposition valves.
	Bag filter plugged with sediment	Check condition of bag filter. Clean and/or change as necessary.
	Worn pump bearings	Consult manufacturer's operation and maintenance manual in Appendix A-5.
Bag Filter High Backpressure	Bag filter plugged with sediment	Check condition of bag filter. Clean and/or change as necessary.
Aqueous-Phase Carbon High Backpressure	Obstructions within carbon vessels	Check condition of piping between bag filter and carbon units. Remove any obstructions. Change out primary aqueous-phase carbon unit, as necessary.

6.0 LOCK-OUT/TAG-OUT PROCEDURES

This section presents Lock-Out and Tag-Out procedures for electronic equipment for the 2-PHASE™ extraction and treatment system. These procedures should be followed prior to performing any repairs or maintenance to electrical equipment.

The persons responsible for the proper operation and maintenance of the 2-PHASE™ extraction and treatment system at Erdle Perforating are the following:

Erdle Remedial Project Manager:	Michael Rick (716) 247-4700
Radian Project Manager (PjM):	James Baxter (716) 292-1870
Radian Field Operations Task Leader (TL):	John Yackiw (716) 292-1870
Radian System Design:	Darrin Costantini (716) 292-1870
B&A Mechanical Contacts:	Jim Maxwell (770) 388-7105
	Michael Snipes (770) 388-7105

Once the field personnel, the subcontractor, the PjM and the TL have decided that maintenance and/or repairs need to be performed on a portion of the system, Lock-Out and Tag-Out procedures shall be executed. Each person who is involved in maintenance on the system shall place a lock and tag on a Lock-Out device to disable the power supply to the equipment. DO NOT OPERATE tags and padlocks will be supplied by Radian. The Lock-Out tag will not substitute for an actual lock. Each person will fill out the required information (name, occupation/employer, expected completion date and time) on the tag they use. After the Lock-Out is completed, a test of all the isolated equipment will be performed to ensure that no power is flowing in the system.

Once the power verification checks are completed, maintenance work may begin. Workers will follow safe work practices outlined in the Field Health and Safety Plan.

6.1 Emergency Procedures

In the event that anything occurs at the 2-PHASE™ unit which is not covered by the following procedures for maintenance and/or repair, or by the Health and Safety Plan, seek further guidance from the PjM or TL.

If any leaks are discovered inside or outside of the vacuum trailer, or if any emergency situation arises, shut down the system using the red STOP button located on the trailer wall, next to the man-door and notify the PjM and/or TL of the situation immediately.

6.2 Electrical Equipment Description

During operation of the 2-PHASE™ extraction and treatment system, it may become necessary to perform some maintenance work on select pieces of equipment. In the event repairs are necessary to electrical equipment or associated items, the electrical supply to this equipment will need to be disconnected.

The main electrical supply (480 volts) to the system is the MAIN breaker installed in the Main Disconnect Enclosure located on the outside of the trailer. Turning off the MAIN breaker via the disconnect switch mounted on the right hand side of the panel will disconnect all power to the system. This includes turning off lights and exhaust fan fed from Power Panel PP-100 (PP-100), the 120-volt power source for the system.

On the face of PP-100 are 12 circuit breakers to isolate power to the following pieces of electrical equipment:

CP-100	Control Panel Exhaust Fan
P-401	Oil Circulation Pump
LS-201 thru LS-204 and LS-401	Level Switches

PS-1 and PS-2	Pressure Switches
HEX-401	Air-Air Heat Exchanger Lights
	Louver Actuator

6.3 Energy Sources for Lock-Out/Tag-Out

6.3.1 Vacuum Pumps (P-201, and P-202)

Two vacuum pumps are installed and maintenance may be performed on either one of the vacuum pumps while the other pump is in operation. To perform repair on either one of the two vacuum pumps, the entire associated pump will need to be shut down. The procedure to isolate the pump from energy sources are as follows:

1. From the control panel, (CP-100), verify that the affected vacuum pump (i.e., #1 or #2) is not on.

2. If the affected vacuum pump is on, stop the pump by pushing the red STOP button on the main control panel (CP-100).

3. From the P-201/P-202 motor starter enclosure, turn the appropriate disconnect switch (Pump #1 disconnect P-201, Pump #2 disconnect P-202) to the OFF position and place a padlock with a Lock-Out tag in the disconnect switch locking bracket.

4. Confirm that the pump has been isolated from the power supply by taking voltmeter readings on the pump before proceeding with any work.

5. NOTE THAT 120 VAC POWER HAS NOT BEEN ISOLATED FROM THE SKID(S). IF WORK IS BEING PERFORMED ON ANY OF THE CONTROL EQUIPMENT, (I.E., OIL LEVEL SWITCHES, ETC.), THE SKID(S) SHOULD BE ISOLATED FROM THE 120 VAC POWER SOURCE. SINCE BOTH SKIDS SHARE A COMMON 120 VAC LINE, AND BOTH SKIDS REQUIRE 120 VAC POWER TO OPERATE, SHUTTING DOWN BOTH SKIDS WILL BE REQUIRED (SEE PROCEDURE ABOVE). TO TURN OFF THE 120 VAC POWER TO THE SKID(S), PLACE BREAKERS #1, 3, 4, IN THE 120 V POWER DISTRIBUTION PANEL (PP-100), IN THE "OFF" POSITION. PLACE

A PADLOCK AND LOCK-OUT TAG ON THE LOCKING BRACKET ON THE POWER PANEL.

6.3.2 Water Transfer Pump (P-301)

One water transfer pump is installed, therefore, work may only be performed on the pump by shutting the entire system down.

To perform work on P-301, shut down the system using the red STOP button located on the wall of the trailer. Place the selector switch for P-301 (located on the P-301, HEX 401 motor starter enclosure) in the OFF position, and place a padlock in the selector switch locking bracket and attach a Lock-Out tag.

Confirm the pump has been isolated from the power supply by taking voltmeter readings at the pump motor before proceeding with any work.

6.3.3 Heater (EH-400)

One heater is installed in the trailer and may, at some point, require maintenance. To isolate EH-400 for maintenance, place the EH-400 selector switch (located on the EH-400, TR-100 disconnect enclosure) in the OFF position, place a padlock in the selector switch locking bracket and attach a Lock-Out tag

Confirm the heater has been isolated from the power supply by taking voltmeter readings at the heater motor before proceeding with any work.

6.3.4 Oil Circulation Pump (P-401)

A single oil circulation pump is installed. Therefore, if maintenance on this item is required, the entire 2-PHASE™ system must be shut down.

To perform work on P-401, initially place the vacuum pump selector switches in the OFF position, and then place the P-401 selector switch (located on PP-100) in the OFF position. Place padlocks in all selector switch locking brackets and attach Lock-Out tags.

Confirm the pump has been isolated from the power supply by taking voltmeter readings at the pump motor before proceeding with any work.

6.3.5 Trailer Exhaust Fan (F-130)

An exhaust fan is installed in the trailer and may require maintenance. To isolate F-130 for maintenance, turn the wall switch off, and place the F-130 selector switch (located on PP-100) in the OFF position, place a padlock in the selector switch locking bracket and attach a Lock-Out tag.

Confirm the fan has been isolated from the power supply by taking voltmeter readings at the fan motor before proceeding with any work.

6.3.6 Level Switches

Level switches LS-201, LS-202, LS-203, LS-204 are located on the inlet separator, and require 120-volt power which is supplied from PP-100. To isolate power to these switches, turn circuit #8 off and place a padlock clasp on PP-100 along with a Lock-Out tag. Level switch LS-401 is located on the condensate pot and requires 120 volt power. To isolate power to this switch, turn circuit #9 on PP-100 off and place a padlock clamp on PP-100 along with a Lock-Out tag.

The entire 2-PHASE™ system must also be shut down prior to work on the level switches by placing the vacuum pump push button switches in the OFF position and then placing padlocks in the selector switch locking brackets and attaching Lock-Out tags.

Confirm the switches have been isolated from the power supply by taking voltmeter readings at the level switches before proceeding with any work.

6.3.7 Electrical Panel

If maintenance must be performed on either PP-100 or CP-100 internal components (i.e., fuses), the MAIN breaker must be turned off and locked out. This will require lighting and power sources from outside the trailer as all power is distributed from the main breaker. Once the breaker has been locked in the OFF position, a Lock-Out tag is to be installed and confirmation that all power has been disconnected should be obtained by taking voltmeter readings on the secondary breaker.

7.0 SAMPLING PROGRAM

The purpose of the sampling program for the IRM is to monitor the operation of the 2-PHASE™ system and the soil and groundwater conditions. The type of samples can be divided into four categories: vapor samples from the treatment unit; water samples from the treatment unit; groundwater samples from the monitoring wells; and subsurface overburden soil samples. The sample frequencies for these types of samples are shown in Table 7-1. Each sample type is described in more detail in the following sections. Descriptions of sample designations and field quality assurance/quality control (QA/QC), are described in this section along with treatment unit vapor and water sample collection procedures. Groundwater samples from monitoring wells and subsurface soil samples will be collected using methodologies described in the approved Phase I and Phase II RI Work Plans for the Erdle project.

7.1 Vapor Samples from Treatment Unit

Vapor samples will be collected from (a) the inlet to the first vapor-phase GAC unit, (b) between the outlet of the first vapor-phase GAC unit and the inlet of the second vapor-phase GAC unit, and (c) the outlet of the second vapor-phase GAC unit. Samples will be submitted to Microseeps laboratory in Pittsburgh, Pennsylvania for analysis for EPA Method 601/602 list compounds by gas chromatography using Method AM4.03. Microseeps sampling procedures and a description of Method AM4.03 are provided in Appendix D. The vapor samples will be collected and analyzed weekly during the initial portion of corrective measure implementation and reduced to semi-monthly as vapor-phase concentrations decline. Analytical results for the effluent vapor will be used to verify compliance with the regulatory requirements of the NYSDEC air emission criteria defined below. In addition, vapor concentrations will be used as a factor (along with vapor flow and operational uptime) to calculate contaminant mass removal rates for the vapor phase.

Table 7-1

Sample Frequencies for Interim Remedial Measure

Sample Type	Purpose	Monitoring Frequency
Vapor Samples from Treatment Unit		
Inlet to first vapor-phase GAC unit	Determine input concentration to vapor-phase treatment system Factor in determining contaminant mass removal rate	Weekly for first month of operation; semimonthly thereafter
Inlet to second vapor-phase GAC unit	Determine treatment efficiency of first vapor-phase GAC unit	Weekly for first month of operation; semimonthly thereafter
Outlet of second vapor-phase GAC unit	Determine treatment efficiency of second vapor-phase GAC unit Compliance monitoring for vapor-phase emissions	Weekly for first month of operation; semimonthly thereafter
Water Samples from Treatment Unit		
Inlet to first aqueous-phase GAC unit	Determine input concentration to water-phase treatment system Factor in determining contaminant mass removal rate	Monthly
Inlet to second aqueous-phase GAC unit	Determine treatment efficiency of first aqueous-phase GAC unit	Monthly
Outlet of second aqueous-phase GAC unit	Determine treatment efficiency of second aqueous-phase GAC unit Compliance monitoring for water discharge	Monthly
Groundwater Samples from Monitoring Wells		
Monitoring wells MW-1, MW-1D, MW-3, MW-3D, and MW-6D	Determine IRM progress for groundwater in source area	Quarterly
Monitoring wells MW-2, MW-2D, MW-4, MW-4D, and MW-6	Determine overall IRM progress for groundwater	Semi-annually
Subsurface Soil Samples in IRM Area		
Conduct four soil borings in the IRM area and collect 1 subsurface soil sample from each boring.	Determine IRM progress for soil in source area	Quarterly

As remediation progresses, it is expected that the concentration of contaminants in the vapor phase will likely decline to below DEC levels. When this is verified by two successive analytical results (at least one week apart during full operation) for the vapor samples from the inlet to the first vapor-phase GAC unit, and as approved by the NYSDEC, both vapor-phase GAC units will be taken off line and the vapors will then be discharged directly to the atmosphere. The sample log portion of a system instrumentation data form (Figure 3-1b) will be completed in the field each time vapor samples are collected from the unit.

7.2 Water Samples from Treatment Unit

Water samples will be collected semi-monthly from (a) the inlet to the first aqueous-phase GAC unit, (b) between the outlet of the first aqueous-phase GAC unit and the inlet of the second aqueous-phase GAC unit, and (c) from the outlet of the second aqueous-phase GAC unit. The samples will be composites of grab samples from each parallel train (e.g., the volume of liquid collected for each sample will be 50% from train 1 and 50% from train 2) and will be collected from a sampling port in the water treatment piping. The samples will be analyzed by RECRA Laboratory for VOCs by EPA Method 8010/8020 according to the procedures specified in the RI Work Plan. Samples of the effluent water from the second aqueous-phase GAC unit will also be collected to satisfy the requirements for discharge of the treated groundwater to the MCPWD sewer. The sample log portion of a system instrumentation data form (Figure 3-1b) will be completed in the field each time water samples are collected from the unit.

7.3 Groundwater Samples from Monitoring Wells

To monitor IRM effectiveness, five existing wells will be sampled on a quarterly basis during implementation of the IRM. These primary wells are MW-1, MW-1D, MW-3, MW-3D, and MW-6D. Five additional existing wells will be monitored on an semi-annual basis. These secondary wells are MW-2, MW-2D, MW-4, MW-4D, and MW-6. The locations of these wells and piezometers are shown on Drawing C-1 of the design drawing package. All groundwater samples will be analyzed by RECRA Laboratory for VOCs by EPA Methods 8010/8020. Groundwater samples from bedrock wells will be collected using the Grundfos pump in accordance with the procedures described in the RI/FS Work Plan. Dedicated disposable polyethylene bailers will be used to sample overburden wells if a small volume of water present, or a slow purge rate, makes use of the Grundfos pump impractical. Samples will be logged, shipped to RECRA Laboratory, and analyzed in accordance with the procedures in the RI/FS Work Plan.

A groundwater sampling form, presented in Figure 7-1, will be completed in the field by sampling personnel for each groundwater sample collected. Sampling personnel will verify the total depths of each well prior to groundwater sampling. All depth measurements taken during groundwater monitoring will be referenced from the top of PVC casing of screened construction and top of steel casing for open-bedrock wells. Groundwater levels will also be measured on a quarterly basis from all other monitoring wells at the Erdle site. This information will be used to document the extent of the capture zone created by operation of the 2-PHASE™ system.

7.4 Subsurface Soil Samples in the IRM Area

Subsurface soil samples will be collected quarterly from the overburden in the source area to determine the progress of the IRM towards reducing soil VOC concentrations.

1. Date _____ Sample No. _____
2. Location _____
3. Well No. _____
4. Well Depth (ft. below top of casing (TOC) _____
5. Screen Length (ft) _____
6. Sampling Crew _____
7. Weather: Wind _____, Air Temperature _____, Precipitation ___
8. Water Level Measurement (ft. TOC): _____
   [Y or N] Well Labeled _____, Casing Elev. (ft. MSL): _____
   Comments _____
9. Depth to Hydrocarbon (if present) Depth to Hydrocarbon/Water Interface Thickness
   _____ _____ _____
10. Casing Type PVC, Diameter _____, Gal/Ft. _____
11. Total Depth _____ — Depth to Water _____ = Ht. _____
12. Well Volume _____ = Ht. _____ x Gal/Ft. _____
13. Required Purge Volume _____, Actual Purged Volume _____
14. Purge Method/Sampling Method _____
15.

	Time	Gallons	Temperature	Conductivity	pH
Initial					
Sample					

16. Analytical Methods _____
17. [Y or N] Turbid(?) _____. Purge Water Containerized(?) _____
18. QA/QC Samples(?) _____
19. Reviewed By _____ Date/Time _____

NA - Not Available.

Figure 7-1. Groundwater Sampling Form

Table 7-2

Field Quality Control Sample Matrix

Sample Type	Frequency	Total Needed (per event)	Analysis
Vapor Samples from Treatment Unit			
Field duplicate	5% per analysis	1	Microseeps Method AM4.03
Water Samples from Treatment Unit			
Field duplicate	5% per analysis	1	SW8010/8020
Groundwater Samples from Monitoring Wells			
Field duplicate	5% per analysis	1	SW8010/8020
Matrix spike	5% per analysis	1	SW8010/8020
Matrix spike duplicate	5% per analysis	1	SW8010/8020
Trip Blank	1 per shipment	1	SW8010/8020
Subsurface Soil Samples in IRM Area			
Field duplicate	5% per analysis	1	SW8010/8020
Matrix spike	5% per analysis	1	SW8010/8020
Matrix spike duplicate	5% per analysis	1	SW8010/8020
Rinsate blank	1 per sampling event	1	SW8010/8020

Table 7-3

Sample Containers and Hold Times

Analysis	Container	Preservation Method	Hold Time	Number of Containers Required (per sample)
Vapor Samples from Treatment Unit				
Microseeps Method AM 4.03	Sealed/evacuated 22 mL sample vials provided by Microseeps	None	14 days	1
Water Samples from Treatment Unit				
SW8010/8020	40 mL VOA vial with Teflon-lined septum	Chill to 4° C	7 days	2
Groundwater Samples from Monitoring Wells				
SW8010/8020	40 mL VOA vial with Teflon-lined septum	Chill to 4° C	7 days	2
Subsurface Soil Samples in IRM Area				
SW8010/8020	250 mL glass jar with Teflon-lined lid	Chill to 4° C	7 days	1

Sample handling procedures, including chain-of-custody, documentation, and shipping procedures described in the RI/FS Work Plan will be followed for the IRM, with the following revisions:

- **Sample Chain of Custody:** Figure 7-2 presents an example chain-of-custody form. Sample chain-of-custody forms shall be completed when the samples are collected.

- **Sample Labeling:** A sample label will be affixed to each sample container submitted for analysis. Sample labels identify the sample by documenting the assigned sample field number, sample matrix, client, sample location, sample depth, preservation method, sampler's initials, and date and time of sampling. Laboratory analyses to be conducted on the sample will be noted in the comments section of the label. Sample numbers shall contain sufficient alpha and numeric codes to allow identification of the sample location (i.e. MW-1 for monitoring well MW-1, PWI for samples from the inlet to the first aqueous-phase GAC unit, etc.) and date of sampling. Labels will prepared with indelible ink in the field and protected from water damage by covering them with clear tape.

- **Sample Shipping Procedures:** All samples will be shipped to arrive at the analytical laboratory the day after collection. Samples will be placed in clear plastic zipper-top bags, placed in a cooler with sufficient ice to maintain the sample temperature at 4° C, and packed to prevent breakage. Sample paperwork will be placed in a plastic bag and affixed to the shipping cooler lid with tape, and the shipping cooler will be sealed with custody seals and clear packing tape. Sample coolers will be marked "This Side Up" and "Fragile" on at least two sides. Samples will be shipped to the following laboratories:

Water and Soil Samples:

Recra Environmental, Inc.
111 Wales Avenue
Tonawanda, New York 14150
Attn: Candace Fox
(716) 691-2600

RADIAN CORPORATION

Chain of Custody Record

Page _____ of _____

PROJECT			NO. OF CONTAINERS	ANALYSES									REMARKS	SAM ID NO. (for lab use only)
SITE														
COLLECTED BY *(Signature)*														
FIELD SAMPLE I.D.	SAMPLE MATRIX	DATE/TIME												
REMARKS													RELINQUISHED BY:	DATE / TIME
RECEIVED BY:	DATE	TIME	RELINQUISHED BY:	DATE	TIME	RECEIVED BY:	DATE	TIME	RELINQUISHED BY:	DATE	TIME			

LAB USE ONLY

RECEIVED FOR LABORATORY BY:	DATE	TIME	AIRBILL NO.	OPENED BY:	DATE	TIME	TEMP°C	SEAL #	CONDITION
REMARKS:									

4-88-30337

Figure 7-2. Sample Chain of Custody

Vapor Samples:

Microseeps
220 William Pitt Way
Pittsburgh, Pennsylvania 15238
Attn: Sample Control
(412) 826-5245

Labeling of shipping containers shall conform to EPA and DOT labeling requirements governing the shipment of environmental samples.

8.0 MONITORING DATA EVALUATION AND REPORTING

8.1 Monitoring Data Evaluation

As previously stated in Section 1, system monitoring data will be used to continuously track the IRM's effectiveness. Treatment unit discharge monitoring samples will be used to determine the contaminant mass removal rate, which can be evaluated in a time-trending basis to assess system performance. Quarterly groundwater samples from the monitoring wells and subsurface soil samples from the IRM area will provide data to track the decreasing soils and groundwater concentrations.

System mass removal rate will be calculated for each phase (i.e. vapor and aqueous) using the sample concentrations and the average vapor/liquid flow rate over the period represented by the sample. As system operation progresses, mass removal rates will be tracked on a time-trending basis. On a typical 2-PHASE™ remediation project, mass removal rates are highest at the beginning of active remediation and decay asymptotically over time as VOCs are removed from the subsurface. Time-trending analysis of the mass removal rate data from the Erdle IRM will be compared against trends observed on other projects with similar geologic and contaminant conditions and used to evaluate IRM progress. Based on this evaluation, system configuration or operational adjustments will be made to optimize IRM performance.

Quarterly groundwater and soil monitoring data will be evaluated in conjunction with the system mass removal rate trend to assess IRM progress. During IRM system operation, it is proposed to evaluate the remediation performance approximately four months after startup, when the results of the first subsurface soil sampling program have been received and validated. This evaluation will allow the expected remediation trends to be projected. Based on this trend projection, the time at which the removal efficiency will level off will be predicted and the IRM schedule and endpoints better defined. The final decision to terminate the IRM will take into account the standards, criteria, and guidelines for the site and the timeframe in which remediation trends indicate that it will become technically impracticable to continue operation.

8.2 Operational Reporting

Operators will fill out weekly and monthly summary reports showing the cumulative amounts of treated and discharged water and vapor. Amounts of system downtime will also be tabulated and explained on these forms. Examples of the weekly and monthly summary reports are shown in Figures 8-1 and 8-2, respectively.

In addition to the summary reports, an air emission log will be completed by the operator. This log will detail the cumulative loading amounts onto the vapor-phase GAC units and the air emission rates.

The air emissions log will be used in conjunction with the summary reports to document the progress of the remedial operations. These reports, along with the analytical results from the groundwater sampling and the vapor and water sampling from the treatment unit, will be submitted to the NYSDEC as part of a Quarterly IRM Progress Report.

Weekly Summary Report

	Monday	Tuesday	Wednesday	Thursday	Friday	Saturday	Sunday	Total
Dates Covered:								NA
1. Total Water Treated (gallons)								
2. Total Vapor Treated/ Discharged (acfm)								
3. System Downtime (hours)								
4. Explanation of System Downtime (if any)								

5. Ambient Air Bleed Valve Open? (Yes/No)

2PE-1	_____	2PE-4	_____	Vacuum Pump #1	_____
2PE-2	_____	2PE-5	_____	Vacuum Pump #2	_____
2PE-3	_____	Inlet Separator	_____	Vacuum Pump #3	_____

Comments:

Date:	
Filed By:	

Figure 8-1. Weekly Summary Report

Monthly Summary Report

	Week 1	Week 2	Week 3	Week 4	Week 5	Total
Dates Covered						NA
1. Total Water Treated (gallons)						
2. Total Vapor Treated/ Discharged (acfm)						
3. System Downtime (hours)						
4. Explanation of System Downtime (if any)						

5. Ambient Air Bleed Valve Open? (Yes/No)

2PE-1 _____ 2PE-4 _____ Vacuum Pump #1 _____
2PE-2 _____ 2PE-5 _____ Vacuum Pump #2 _____
2PE-3 _____ Inlet Separator _____ Vacuum Pump #3 _____

Comments:

Date:	
Filed By:	

Figure 8-2. Monthly Summary Report

Table 5-1

Troubleshooting Guide to the 2-PHASE™ Extraction and Treatment System

Alarm Condition	Probable Causes	Corrective Action Required
High Inlet Separator Water Level	Transfer pump selector switch not in AUTOMATIC mode while skid is running	Check to ensure that transfer pump switch is in the AUTOMATIC position
	Blockage in the water transfer lines	Turn transfer pump switch to MANUAL position and observe liquid level in inlet separator. If level drops, there is no blockage in the water transfer line. If level remains the same, blockage in the water transfer line is probable. Set pump to OFF position and continue diagnosis.
	Bag filter clogged, inhibiting pump performance	Check condition of bag filter. Clean or replace as necessary. To ensure that the blockage has been cleared, perform the water transfer line blockage test detailed above.
	Y-strainer on inlet to transfer pumps is clogged, inhibiting pump performance	Check condition of Y-strainer. Clean as necessary. To ensure that the blockage has been cleared, perform the water transfer line blockage test detailed above.
	High water production from extraction wells	This problem is common when placing new extraction wells on line or when starting up the system after an extended shut-down period. To rectify the situation, Empty the inlet separator by turning the transfer pump to the MANUAL position. Turn 1-2 extraction wells off line and restart the system (See START-UP PROCEDURES). If the system goes down again due to a high inlet separator level, place several more wells off line and repeat the procedure.
	Faulty "PUMP ON" level switch	Check condition of "PUMP ON" level switch. Replace as necessary.
Low Inlet Separator Water Level	Faulty "PUMP OFF" level switch in inlet separator	Check condition of "PUMP OFF" level switch. Replace as necessary.

APPENDIX A

MANUFACTURERS' OPERATIONS AND MAINTENANCE MANUALS

APPENDIX A-1

MANUFACTURER'S OPERATIONS AND MAINTENANCE MANUAL FOR VACUUM PUMPS

TRAVAINI PUMPS USA

"Dynaseal"
Liquid Ring Vacuum System
Installation and Operations Manual

CUSTOMER: RADIAN CORPORATION/B & A ENVIRONMENTAL SERVICES

SYSTEM MODEL: TR0300V-1A-XP SYSTEM S/N: 2688-96

PUMP MODEL: TRVA65-450/1C/GH PUMP S/N: J7191

DO NOT DESTROY

May 2, 1996

RADIAN CORPORATION
PO Box 201088
Austin, TX 78720-1088

ATTN: Bryan Rotto

Enclosed please find a copy of our engineering manual giving you detailed information on our products. Please take a moment to page through it to familiarize yourself with the contents in the different sections.

Each manual is registered in both your name and your company name, and is recorded in our office. It is your responsibility to keep the manual up-to-date and insert the periodical updates. All the information is considered confidential. The manual remains the property of Travaini Pumps U.S.A., Inc.

If you have any questions or should need further information please feel free to call us.

Sincerely,

Debbie Wuggazer
Customer Service

RECOMMENDED SPARE PARTS LIST

***DYNASEAL MODEL#**

TRO300V-1A-XP

****PUMP MODEL USED**

TRVA65-450/1C/GH

QTY	DESCRIPTION	PART#
1	*COUPLING ELEMENT	750-3800-A098
1	*SEPARATOR ELEMENT	680-1215-A000
1	*SOLENOID VALVE	855-0100-B001
1	*TEMP CNTRL THERMO	865-0100-A000
1	*INLET CHECK VALVE	820-0250-A004
1	*Y STRAINER SCREEN	661-0100-A000
1	*HI TEMP SWITCH	470-0050-e000
2	*OIL LEVEL SWITCH	465-0100-A000
1	*FLTR SILENCER ELEMENT	601-0100-A003
1	*VAC RELIEF VALVE	852-0125-C000
13 gal	OIL	971-0022-A000
2	**BALL BEARING	961.006.308.000
1	**GASKET SET	GUA.B2C.000.00M
2	**LIP SEAL	942.043.600.603
2	**MECHANICAL SEAL	950.043.SAC.915

*DENOTES SPARE PARTS FOR THE SYSTEM

**DENOTES SPARE PARTS FOR THE PUMP

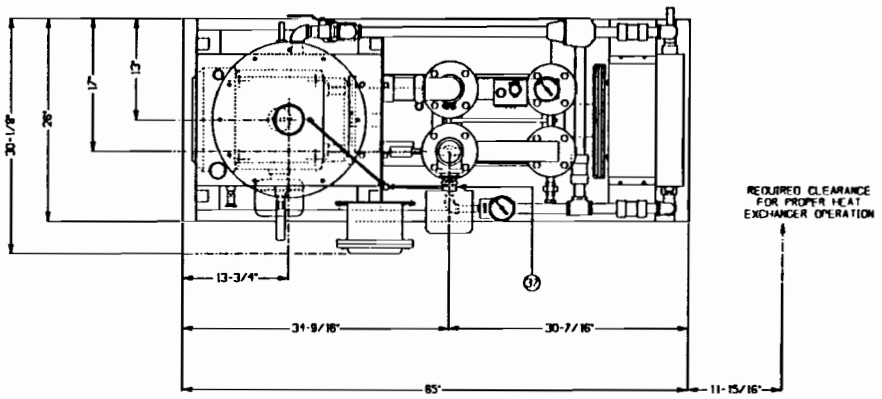

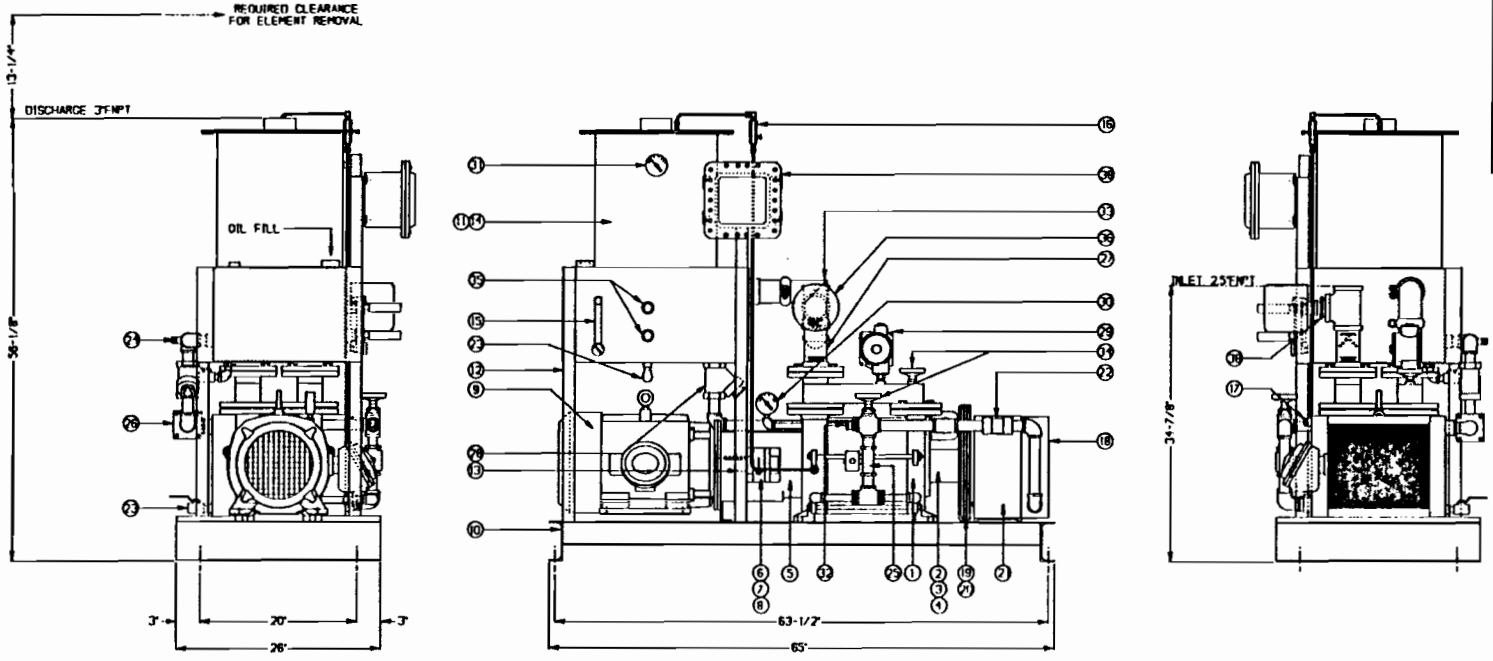

BILL OF MATERIAL

ITEM#	DESCRIPTION	PART NUMBER	QTY
1	VAC PUMP (TRV65-450/C/GH	TRVA65-450/C/GH	1
2	SHAFT EXT 40mm X 1.125"	940-0040-A000	1
3	BEARING CAP 25mm BORE	942-0025-A000	1
4	LIP SEAL PL-M60	9420557506003	1
5	M-BLOCK ASSY TRV65 2561	AMB-TRV6-2561	1
6	DRIVE CPLG AL 3802 1625"	701-3802-A162	1
7	DRIVE CPLG AL 3801 32 MM	701-3801-A032	1
8	CPLG ELMNT SIZE 38 ROTEX	750-3800-A098	1
9	MOTOR 20 HP 4P XP 256TC	262-0200-A000	1
10	BASEPLATE OIL FR 65"X26"X5"	950-9406-0830	1
11	SEPARATOR OIL 2.5" INLET	904-9406-0310	1
12	LFG SEPARATOR 15" X 32"	955-9406-0910	1
13	LFG SEPARATOR 15" X 47.5"	955-9406-0920	1
14	SEP ELMNT TR0200-300 REV1	680-1215-A000	1
15	GAUGE LEVEL 6" W/TEMP	420-0050-A000	1
16	VLV NEEDLE 2.5" W/GAUGE	840-0025-A001	1
17	VLV PETCOCK 2.5" MNPT BRS	890-0025-A000	1
18	HT EXCH 17"X12" 1PASS AIR/LIQ	535-1712-A000	1
19	FAN 12" 10 BLADE 45D LFT	550-1210-A001	1
20	WIRE GUARD FOR 12"OD FAN	925-0012-A000	1
21	SHROUD FOR 12" OD FAN	920-9311-0210	1
22	FLEX CPLG 1" CS/NIT	190-0100-B000	3
23	VLV BALL 50" THD SP BRS	801-0050-0000	2
24	VLV BALL 1" THD FP BRS	802-0100-B000	1
25	VLV SOL 1" N7 NC BRASS	855-0100-0001	1
26	VLV TEMP CNTL 170°F CI	864-0100-A000	1
27	VLV CHK HNG 2.5" THD 304/VIT	820-0250-A004	1
28	STRAINER Y 1" THD CI	660-0100-A001	1
29	SWITCH TEMP 50" XP 304SS	475-0050-E000	1
30	GAUGE VAC 0-30"HgV BRASS	400-0075-R000	1
31	GAUGE PRES 0-15 PSIG BRASS	402-0075-R000	1
32	GAUGE BULLSEYE 50" CS	421-0050-C001	1
33	FLEX 90 2.5" CS/BUNA	190-0250-A001	1
34	GAUGE TEMP 20/240 -- 10/110	410-0050-F001	2
35	SWITCH LEVEL 1" XP BRS/SS	485-0100-A000	2
36	FLTR SLNCR 1.25" 60 SCFM	602-0125-A001	1
37	VLV VAC REL 1.25" 316SS	852-0125-C000	1
38	J-BOX W/ 6X6X4 INSIDE DIM	ZJB-2684-9600	1
N/A	OIL DYNALUBE (GAL)	971-0022-A000	13

REV#	DATE	DESCRIPTION / REASON	REV#	DATE	DESCRIPTION / REASON	REV#	DATE	DESCRIPTION / REASON

TOLERANCES
DECIMAL: +0.01"
FRACTIONAL: +1/8"
ANGULAR: +0°30'00"

THIS PRINT IS THE PROPERTY OF TRAVAINI PUMPS USA INC. AND MAY NOT BE GIVEN TO ANY OTHER CONCERN WITHOUT THE CONSENT OF TRAVAINI PUMPS USA, INC.

DRAWN BY: FAB

CHKD BY:

SYSTEM S/N# 2684/5/6/8-98

MODEL# TRO300V-1A-XP

SCALE: 1/8" = 1"

DATE: 04-MAR96

DWG# 9603041-0

WEIGHT = 1750 LBS

TRAVAINI PUMPS USA

DESCRIPTION
DYNAFLEX SIMPLEX 20 HP
EXPLOSION PROOF AIR COOLED SYSTEM

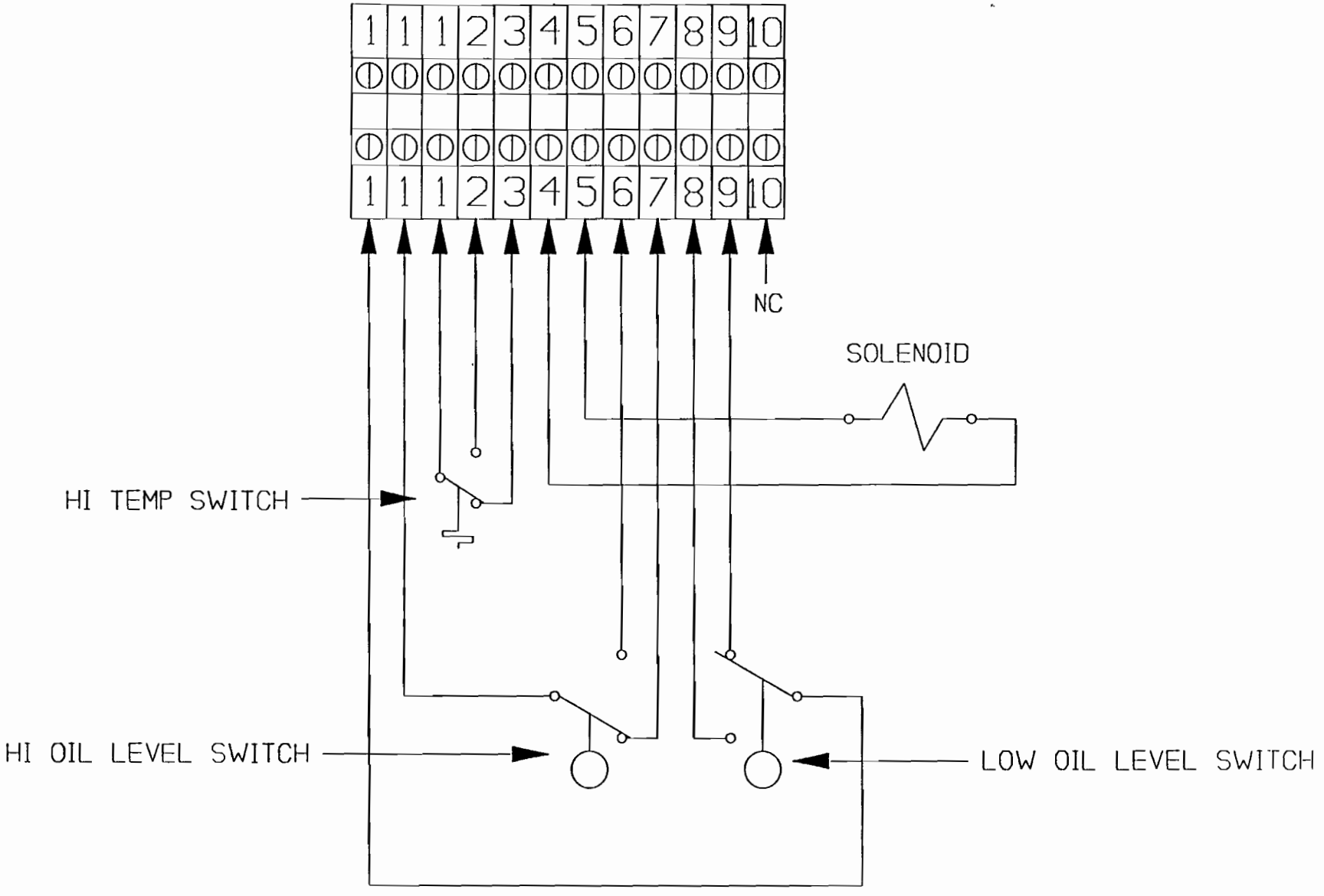

REV#	DATE	DESCRIPTION / REASON

TOLERANCES
DECIMAL: ±0.063"
FRACTIONAL: ±1/8"
ANGULAR: ±0°30'00"

THIS PRINT IS THE PROPERTY OF TRAVAINI PUMPS USA, INC., AND MAY NOT BE GIVEN TO ANY OTHER CONCERN WITHOUT THE CONSENT OF TRAVAINI PUMPS USA, INC.

DRAWN BY: PAB

CHKD BY:

SYSTEM S/N#2684/5/6/7/8-96

MODEL # TRO300V-1A-XP

SCALE: 1" = 1"

DATE: 18-MAR96

DWG# 96031811-A

WEIGHT ≈

TRAVAINI PUMPS USA

DESCRIPTION:
TERMINAL BLOCK CONNECTION DIAGRAM
FOR RADIAN TRO300V XP SYSTEM

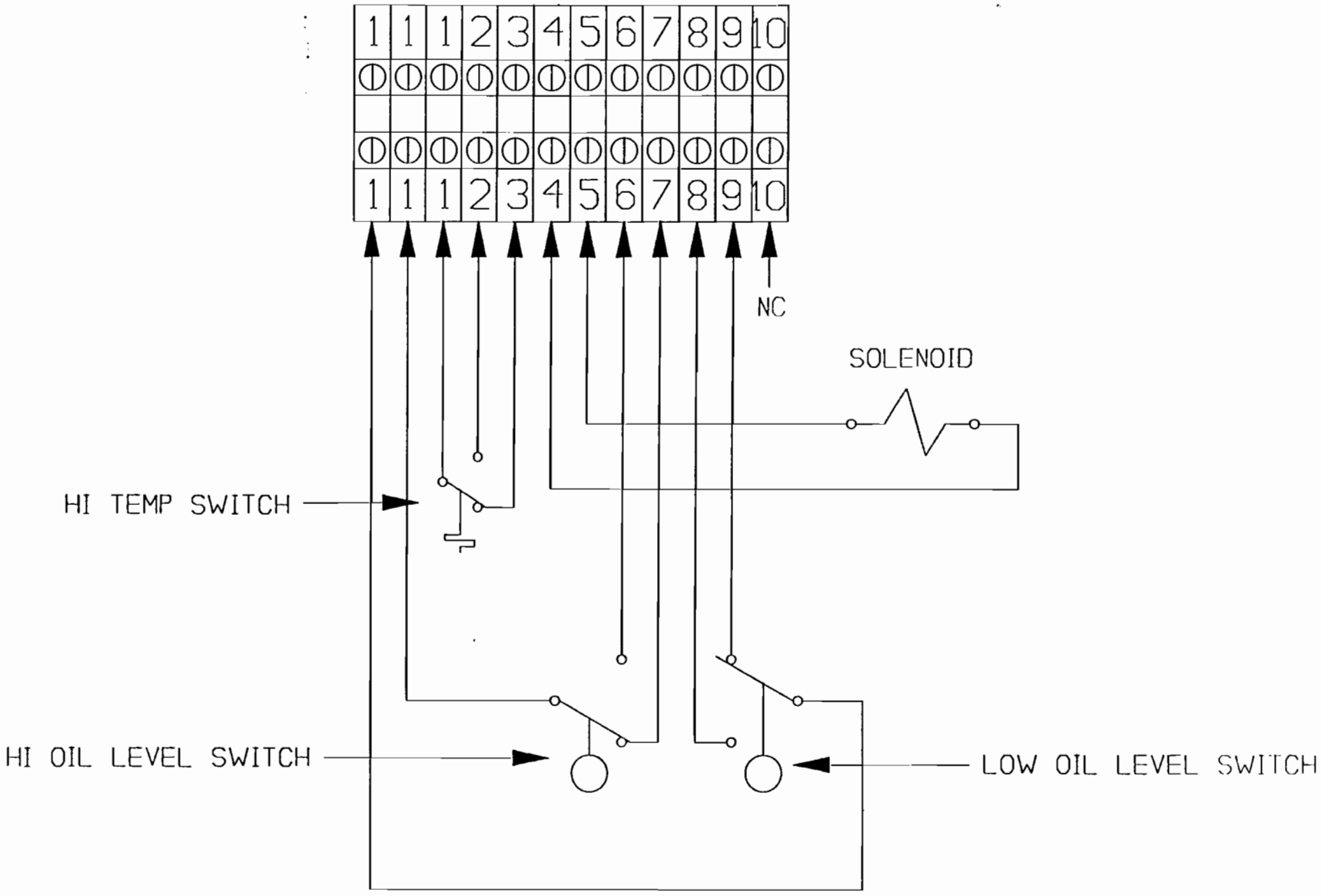

REV#	DATE	DESCRIPTION / REASON

TOLERANCES
DECIMAL: ±0.063"
FRACTIONAL: ±1/8"
ANGULAR: ±0°30'00"

THIS PRINT IS THE PROPERTY OF TRAVAINI PUMPS USA, INC., AND MAY NOT BE GIVEN TO ANY OTHER CONCERN WITHOUT THE CONSENT OF TRAVAINI PUMPS USA, INC.

DRAWN BY: PAB

CHKD BY:

SYSTEM S/N#2684/5/6/7/8-96

MODEL # TRO300V-1A-XP

SCALE: 1" = 1"

DATE: 18-MAR96

DWG# 96031811-A

WEIGHT =

TRAVAINI PUMPS USA

DESCRIPTION:
TERMINAL BLOCK CONNECTION DIAGRAM
FOR RADIAN TRO300V XP SYSTEM

TRAVAINI PUMPS USA

INSTALLATION & OPERATION MANUAL

"DYNASEAL"

LIQUID RING VACUUM PUMP SYSTEMS

TABLE OF CONTENTS

1.0	**INTRODUCTION**
1.1	SAFETY
2.0	**INSTALLATION**
2.1	UNPACKING
2.2	LOCATION
2.3	FOUNDATION
2.4	ELECTRICAL
2.5	PIPE CONNECTIONS, SIZING, & LAYOUT
3.0	**OPERATION**
3.1	GENERAL DESCRIPTION
3.2	PUMP SEAL FLUID, TYPE, QUANTITY, LEVEL
3.3	START-UP PROCEDURE
3.4	SHUT-DOWN PROCEDURE
4.0	**MAINTENANCE**
4.1	SEAL FLUID: CHANGE-INTERVAL
4.2	BEARING LUBRICATION
4.3	SHAFT SEALS
4.4	EXHAUST FILTER
4.5	INLET FILTER
4.6	MAINTENANCE CHART
4.7	TROUBLESHOOTING
4.8	RECOMMENDED SPARE PARTS LIST & DATA SHEETS

1.0 *INTRODUCTION:*

The Travaini "Dynaseal" Liquid Ring Vacuum Pump system will give you years of trouble-free service provided some of the basic maintenance guidelines as set out in this manual are followed. Our systems have been designed to provide safe and reliable service. However, because a vacuum pump is a rotating piece of equipment, the operator must exercise good judgement and proper safety procedures to avoid damage to the equipment or personal injury. A system drawing is enclosed. Please review and follow instructions in this manual before attempting to install or start equipment.

1.1 Safety:

It is assumed that your safety department has established a program based upon a thorough analysis of industrial hazards. It is important that due consideration be given to these hazards which arise from the presence of electrical power, hot liquids, toxic gases, and rotating equipment. Proper installation and care of protective devices is essential. These safety procedures are to be used in conjunction with the instructions contained in this manual.

2.0 *INSTALLATION:*

The design of foundation, piping system and the areas of plant system design is the purchaser's responsibility. Travaini Pumps USA, Inc. will offer advice but cannot assume responsibility for operation and installation design.

We recommend that the purchaser consult the dealer or a specialist skilled in the design of foundation, piping, and equipment location to supplement and interpret the information given in this manual to ensure a successful installation. Your dealer can provide start up assistance in most instances at reasonable cost.

WARNING: Install, ground, and maintain equipment in accordance with the national electrical code and all applicable federal, state and local codes.

2.1 Unpacking:

Inspect unit immediately upon arrival for any sign of damage. All Travaini products are shipped F.O.B factory, which means that any damage is the responsibility of the carrier and should be reported to them.

2.2 Location:

Install the unit in a well ventilated and dust free area. Cooling is an important aspect of the vacuum system operation. It is therefore important to install the system in a reasonably cool area where the temperature does not exceed 100° F (38° C).

For air cooled systems allow a minimum of 12 inches between the heat exchanger and the wall. In addition, allow sufficient space around the unit for checking fluid level, temperature, and for general servicing.

2.3 Foundation:

The pump system must be installed in a horizontal position on a level surface. The foundation must be designed to support the total system weight and be rigid and substantial enough to absorb any system vibration and to permanently support the baseplate at all points. We recommend the installation of standard neoprene mounting pads between the base frame and floor. Level the base frame using a machinist's level to determine the levelness. Travaini "Dynaseal" systems are designed to operate without the need for foundation bolts, although the base frame does allow for the use of foundation bolts if desired.

2.4 Electrical:

Our "Dynaseal" systems include an electrical control panel as standard. The main motor and control instruments are wired to the panel at the factory. An electrical wiring diagram is included in this manual. The system must be connected according to the local electrical codes. A disconnect switch should be installed between the system control panel and plant power. The full load current rating stamped on the motor nameplate should be used in selecting protective ratings.

> **Warning: Before startup, check all electrical connections and secure all bolts and screws as some might have come loose during transit.**

After the electrical work is completed jog the motor to check direction of rotation. The direction of rotation is marked by an arrow on the pump housing. If the direction is wrong, switch any of the three main leads on the contactor in the control panel.

2.5 Pipe Connections and Sizing:

Before installation, remove all protective inserts in the gas and liquid connections. Piping connected to the system must be installed without imposing any strain on the system components. Improperly installed piping can result in misalignment, pump failure, and general operating problems. Use flexible connectors where necessary. Piping should be cleaned properly before installation.

> **Install a temporary screen at the pump inlet flange at first start up to protect the unit against carry over of pipe debris and welding slag. The screen must be removed after the initial run in period.**

Pipe Sizing:

Inlet and discharge piping should be at least the size of the pump inlet and separator discharge. It is recommended to install the system as close as possible to the process to minimize the length of the suction line. If the system has to be installed further away from the process, be sure that the inlet piping is oversized accordingly to minimize the overall line pressure drop. If not sure, consult a specialist or call the factory. Pump systems operating in parallel on a common manifold must each have a manual or automatic shut-off valve or a suitable check valve installed in the suction line close to the pump suction flange.

If the possibility exists that the pump inlet can become closed during operation it will be essential to install some type of vacuum relief so that air can enter the pump inlet.

NEVER RUN A PUMP WITH CLOSED SUCTION

Always install a check valve suitable for vacuum service providing a minimum of resistance close to the pump suction flange to prevent backflow of process gas and seal fluid when the pump is stopped. Dynaseal systems are supplied with an inlet check valve as standard.

Discharge Piping:

It is not recommended to discharge the exhaust gasses from the pump system into the room where the system is installed. Install an exhaust line of at least the same diameter as the discharge connection on top of the separator reservoir, leading outside. It is recommended to install the exhaust piping according to the sketch below. Install a drain valve at the lowest point to prevent condensibles draining back into the separator reservoir. Pump systems operating in parallel on a common discharge manifold must each have a suitable check valve installed close to the pump discharge flange. When discharging more than one pump in a common discharge line and/or over a long distance, oversize pipe accordingly

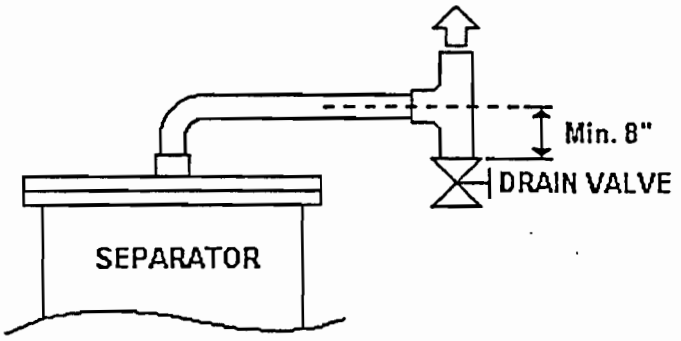

Existing discharge lines should be checked on pressure loss when replacing vacuum pumps on older installations.

Cooling water piping (for water cooled systems only):

Water cooled systems require an adequate supply of cooling water at a maximum of 85° F and a minimum supply pressure of 40 psig. If cooling water temperature is higher or available pressure lower, contact factory.

The cooling water outlet connection of the heat exchanger is fitted with an automatic temperature control valve which regulates the cooling water flow rate depending on pump operating temperature. The valve is preset at the factory. Normal system operating temperature is between 150° - 170° F. The valve will only open when system operating temperature is reached.

Note: Ensure that cooling water outlet line is connected to the temperature contol valve.

Valve adjustment (for water cooled systems only):

To raise system operating temperature, turn valve adjusting screw counter clockwise. To lower operating temperature, turn clockwise.

3.0 *OPERATION:*

3.1 General Description:

At the heart of the "Dynaseal" system is the reliable Travaini liquid ring vacuum pump. The pump design and principle of operation (see appendix I) provides ample clearance between the impeller and casing elements. Grease lubricated bearings are mounted external from the pumping chamber, isolated by mechanical shaft seals. This means that the pump requires no internal lubrication. The function of the seal fluid in the system is to create a liquid piston action and to remove the heat of compression. The seal fluid in the system circulates in a closed loop. The heat exchanger, either air or water cooled, removes the heat of compression. The discharge separator/reservoir holds the seal fluid and incorporates a highly efficient separator arrangement to separate the seal fluid from the air or gasses discharged by the pump system.

3.2 Pump Seal Fluid:

The system is shipped with a factory recommended seal fluid although any light viscosity oil can be used. We recommend the use of our TR1001 fluids for obtaining ultimate performance from your "Dynaseal" vacuum pump system. The TR1001 fluids are especially formulated for use in our "Dynaseal" systems, providing low viscosity, excellent water separating qualities, anti-foaming and low oxidation. If the above recommended fluid is not on hand, contact the factory for a recommended substitute. The system includes a temperature control valve as a standard to maintain operating temperatures at all times, (150° to 180° F. is normal). Note: Units up to 5 HP do not have a temperature control valve installed as standard.

3.4 Start Up Procedures:

Ensure seal fluid isolation valve is open (item #22). Jog the motor briefly and check direction of rotation. The correct direction of rotation is marked by an arrow on the pump housing. If direction is backwards switch any two of the three leads at the power connection. The correct direction of rotation is clockwise facing the pump from the motor side.

Check drive coupling alignment. Both angular and parallel alignment should be within .005" total indicator run out. Monoblock units do not require any field adjustment (motors are C-face mounted).

Check fluid level in separator reservoir. The fluid level should be halfway in the sight glass.

Set the inlet valve about ¾ closed, and start pump.

Run pump for a few minutes and then stop.

With the pump shut off, check fluid level again. The fluid level should be visible in the sight gauge between the ½ and ¾ mark. Add fluid if necessary.

> **WARNING: Never remove oil fill plug while pump is running.**

Start pump again and check that discharge pressure on the separator pressure gauge does not exceed 2 psig when operating under vacuum conditions. A pressure higher than 2 psig is a sign of high back pressure in the discharge pipe system. Pressure gauge might show a higher pressure at start-up at low vacuum (0-10" Hg).

Check if line voltage is correct and that motor current drawn is within specifications (standard motors have a 1.15 S.F.).

After 10-15 minutes of operation check pump operating temperature, which should be in the 150°-185° F range.

3.5 Shut Down Procedure:

To stop the pump system, switch to off position, or push stop button. The inlet check valve will prevent fluid from the system being sucked back into the inlet manifold.

4.0 *MAINTENANCE:*

4.1 Seal Fluid:

After the first 50 hours of operation, clean the filter/strainer in the seal fluid line to remove any debris carried over into the system.

Check seal fluid level in the reservoir. A high fluid level could mean a build-up of water in the reservoir, which should be drained.

Repeat the above procedure every 1000 hours.

It is recommended that the seal fluid be changed every 6000 hours of operation or once a year, whichever is sooner. Extreme operating conditions might require more frequent changes.

To change the fluid, make sure the pump is off, then drain the reservoir, vacuum pump and heat exchanger. We recommend that the fluid be changed when the system is at operating temperature.

Clean the seal fluid filter/strainer. If the strainer shows a large amount of deposit, consider flushing the system with Thermalsolve or similar cleaning fluid to remove varnish or sludge.

When charging the system with new fluid, make sure that the pump is filled up to shaft level, and that the reservoir is up to the level in the sight gauge. Open the air bleed valve on the heat exchanger to remove all air from the system. Run the pump for a few minutes, stop and check fluid level again. If required, add additional fluid up to the correct level in the sight gauge.

4.2 Bearing Lubrication:

The smaller pump units through 7½ HP are installed with sealed bearings which require no field lubrication.

The larger units of 10 HP and above require regreasing every 3000 hours. Extreme operating conditions might require more frequent regreasing. Grease fittings are located on each bearing housing.

WARNING: Do not over grease bearings.

4.3 Shaft Seals:

All Travaini vacuum pumps are fitted with mechanical shaft seals. Mechanical seals usually do not require maintenance unless there is visual leakage. Some leakage is normal or will accumulate over time.

Seal replacement is addressed in the assembly and disassembly instructions for the specific pump model used.

4.4 Exhaust Filter:

The exhaust filter is located in the separator/reservoir. Generally we recommend the replacement of the element every 6000 hours or once a year. Earlier replacement might be necessary when the back pressure is higher than 4 psig when operating at a minimum vacuum of 15" Hg.

If excessive smoking or oil mist is present, check oil return line and orifice sight glass. A small amount of oil should be visible in the return line sight glass orifice which has an adjustment knob for metering returned oil. If closed, turn knob until a flow of oil is visible.

4.5 Inlet Filter (if installed):

Check after first 50 hours of operation. Clean or replace element every 1000 to 3000 hours depending on application or if excessive pressure drop is noticed.

4.6 Maintenance Schedule

We recommended that you set-up a basic maintenance schedule as follows to ensure trouble free operation.

- 50 hours operation: check oil level, clean strainers, remove temporary inlet screen. Check for water in sight gauge. Drain off water, if necessary. Check piping for any signs of oil leakage. Tighten, if necessary.

- Repeat the above procedure every 1000 hrs of operation under normal conditions.

- 1000 hours operation: check back pressure on separator element; it should not exceed 4 psig.

- 1000-3000 hours of operation (on pumps 10 HP and larger): there are grease fittings located on each bearing housing. Grease bearings with a #2 quality lithium grease. **Do not over-grease.** 3-4 pumps with a normal grease gun is sufficient under normal conditions.

- 6000 hours of operation (or once per year): change seal fluid. Use Travaini p/n TR1001 seal fluid. Change separator element if back pressure exceeds 4 psig. Check coupling element for wear. Replace if worn.

- Every 5 years or 30,000 hours: it is recommended to have the mechanical seals and bearings replaced as a preventative maintenance, if the pump operation is critical to your operation. This should be done by an authorized distributor or properly trained individual only.

4.7 Troubleshooting chart

We recommended that you consult your local dealer for service. This chart is intended as a basic troubleshooting guide. Each "Dynaseal" system is tested and checked at the factory. Always indicate system model and serial number when calling. A wiring diagram is supplied with each system if a control panel is supplied by Travaini. Always isolate the machine before attempting any repairs.

> **WARNING: Please observe caution, some machines can start automatically from a vacuum switch.**

PROBLEM	ITEMS TO CHECK*
1. Pump operates, but no vacuum develops:	A-B-F-N
2. Pump shuts down while running:	B-C-D-E-H-S
3. Pump overheats or operates above 200° F.:	B-G-F-P
4. Motor kicks out or stops after several starts:	H-M-E-K
5. Pump will not start in hand or auto position:	H-B-I-D
6. Abnormal noise or sound from pump:	L-M-B-Q-R
7. Pump does not obtain desired vacuum level:	A-C-Q
8. Excessive oil usage or misting:	J-K
9. Excessive vibration:	L-M-O
10. Pump will not rotate:	I

*refer to next page for item list

Items to check for:

A. Check the inlet valve and inlet filter. Ensure that no lines are open to the atmosphere, causing loss of vacuum.

B. Ensure that the oil level is correct and that the pump is primed.

C. Check the vacuum switch setting, if installed.

D. Check low oil level switch (if installed), add oil if needed.

E. Check high temperature switch (if installed), which is set for 225° F.

F. Check if the oil isolation valve is open and if the solenoid is working.

G. Check the oil cooler and fan. Clean cooler, ensure that 12" of space is available in front of the cooler and that the ambient is below 110° F.

H. Check the overload setting on the starter and fuses. Ensure that the proper voltage is supplied and that the wire size is correct. Check if the disconnect is switched on.

I. Check if the pump has seized. If seized, consult the factory or dealer at once.

J. Check the oil return line from the separator and ensure that the oil flows through the sight glass. Check for a plugged line or closed metering valve.

K. Check the back pressure on the oil separator element. If above 4 psig, replace element.

L. Check the coupling, and/or element. If worn or damaged, replace.

M. Check if the bearings are greased. Rotate the pump by hand. If a rubbing noise or binding is observed, consult factory. Pump should rotate freely by hand.

N. Check if the pump rotation is correct!

O. Check that the pump mounting bolts, coupling, fan, cooler, are not loose. Tighten as required.

P. Check if the thermal valve is working and if the oil is flowing through the cooler.
Caution, hot oil!

Q. If a vacuum relief valve is supplied, check the setting and adjust as needed.

R. Check if the inlet is closed. The pump cavitates due to closed inlet.

S. Check if the Y-strainer is clean.

Travaini Pumps U.S.A., Inc.
921 South Woodland Avenue Michigan City, IN 46360
Phone: (219) 872-4244 Fax: (219) 872-4153

DYNASEAL LUBRICANT MATERIAL SAFETY DATA SHEET
EMERGENCY NUMBER (517) 496-3780

Section 1	Product Name and Information

Product(Trade Name and Synonyms: TR1001-22
971-0022-A000
Chemical Name: Hydrotreated, Paraffinic Mineral Oil
Chemical Family: Semi-Synthetic Hydrocarbon
Formula: Proprietary
CAS#: Proprietary.

Section 2	Components and Hazard Statement

This product is non-hazardous. The product contains no known carcinogens. No special warning labels are required under OSHA 29 CFR 1910.1200.

Section 3	Safe Handling and Storage

Handling. Do not take internally. Avoid contact with skin, eyes, and clothing. Upon contact with skin, wash with soap and water. Flush eyes with water for 15 minutes and consult physician. Wash contaminated clothing before reuse.

Storage. Do not store above 40° C (104° F). Keep container tightly sealed when not in use.

Section 4 Physical Data

Appearance: Clear liquid, light amber tint
Boiling point: > 300° F
Vapor Pressure: < 0.01 mm Hg @ 20° C
Specific Gravity (water=1):0.87-0.89
Volatiles, Percent by Volume: 0%
Odor: Slight
Solubility in Water: Insoluble
Evaporation Rate (butyl acetate=1): Nil

Section 5 Fire and Explosion Hazards

Flash Point (by Cleveland Open Cup): 375-500° F
Flammable Limits: not established
Autoignition Temperature: no data
HIMIS Ratings:

Health:	1
Flammability:	0
Reactivity:	0

NFPA Ratings: not established

Extinguishing Media: Dry Chemical; CO_2 ; foam; water spray (fog)

Unusual Fire and Explosion Hazards: None

Special Fire Fighting Techniques: Burning fluid may evolve irritating/noxious fumes. Firefighters should use NIOSH/MNSA-approved self-contained breathing apparatus. Use water to cool fire-exposed containers. Use water carefully near exposed liquid to avoid frothing and splashing of hot liquid.

Section 6 Reactivity Data

Stabiility: Stable
Hazardous Polymerization: Will not occur
Incompatible Materials: Strong oxidizers
Conditions to Avoid: Excessive heat
Hazardous Decomposition Products: Analogous compounds evolve carbon monoxide, carbon dioxide, and other unidentified fragments when burned. See Section 5.

Section 7 Health Hazard Data

Threshold Limit Value: 5mg/m³ ACGIH for oil mists
Situations to Avoid: Avoid breathing oil mists
First Aid Procedures:
Ingestion: Consult physician at once. DO NOT INDUCE VOMITING. May cause nausea and diarrhea.
Inhalation: Product is not toxic by inhalation. If oil mist is inhaled, remove to fresh air and consult physician.
To the best of our knowledge the toxcity of this product has not been fully investigated. Analogous compounds are considered to be essentially non-toxic.

Section 8 Personal Protection Information

Respiratory Protection: Use in well ventilated area
Ventilation: Local exhaust
Protective Gloves: Not required, but recommended, especially for prolonged exposure.
Eye/Face Protection: Goggles

Section 9	Spill or Leak Procedures

In Case of Spill: Wear suitable protective equipment, especially goggles. Stop source of spill. Dike spill area. Use absorbent materials to soak up fluid (i.e. sand, sawdust and commercially available materials). Wash spill area with large amounts of water. Properly dispose of all materials.

Section 10	Waste Disposal methods

Incinerate this product and all associated wastes in a licensed facility in accordance with Federal, state, and local regulations.

The information in this material safety data sheet should be provided to all who use, handle, store, transport, or are otherwise exposed to this product. CPI believes the information in this document to be reliable and up to date as of the date of publication, but makes no guarantee that it is.

1.93

Travaini Pumps U.S.A.

"DYNASEAL" Oil Sealed Vacuum Pump Systems

SEQUENCE OF OPERATION

The following sequence of operation is a description of how the "DYNASEAL", oil sealed, vacuum pump systems should operate. The description is general to cover simplex to multiplex (more than one pump) systems. It is assumed that all start-up procedures have been followed. **Ensure that pump reservoirs are filled with oil (See start-up procedure.) Make sure that the seal fluid isolation valve is in the open position.** If unsure about the function of one of the electrical controls mentioned below, see the "Electrical Controls" section for a description of the component. **If any of the below do not occur, see the "Trouble-shooting " section.**

DANGER: HIGH VOLTAGE!

Once the power connection to the system has been made, the following should occur:

- If disconnect(s) or circuit breaker(s) are installed on the control panel, and are turned to the "on" position, the system will be energized. If "power on" indicating lights are installed on the panel, the lights will be illuminated.

- If any other lights are illuminated, see the "Trouble-shooting" section.

- If the "hand-off-auto" selector switch(s) are turned to the "Hand" mode, the pump(s) will immediately start-up. If "Pump on" light(s) are installed on the panel, they will light up to indicate pump operation. We suggest that each pump be tested ("bump started") in the "Hand" mode initially to check rotation of the pump. When facing the back end of the motor, the correct rotation is in the clockwise direction. When in "Hand" mode, the pumps will run continuously unless an alarm condition is triggered. If such a condition occurs, see the "Trouble-shooting " section.

- When the "hand-off-auto" selector switch is placed in the "Auto" mode, the pumps will operate from vacuum switches. In multiplex pump systems, each vacuum switch is set with a differential as well as an offset relative to the next switch. The switches should not be set identically. The differential is usually between 4 to 6 inches of Mercury. For details on setting the vacuum switches, see the vacuum switch specification sheet in the system IOM. Below is an example for a duplex system.

Pump one (lead pump):Pump on @ 20"Hg.
Pump off @ 25"Hg.
Pump two (lag pump): Pump on @ 18"Hg.
Pump off @ 23"Hg.
As can be seen from above, the differential for each switch is 5"Hg., the offset between the two switches is 2"Hg.

- The switches are set in this manner so that if pump "one" cannot satisfy demand and the vacuum level drops below 20"Hg., the lag pump will start-up when the vacuum level reaches 18"Hg. and so on.

- Most multiplex systems will be supplied with "Automatic alternation" and "Frequent stop/start protection."

- "Automatic alternation" allows the pumps to operate equally (even run time) by alternating each pump whenever the pump(s) shut down. When alternation occurs, the "lead" pump becomes the "lag" pump and the "lag" pump becomes the "lead" pump.

- "Frequent stop/start protection" is used to allow the pump(s) to operate a minimum amount of time. The time period is factory set at 10 minutes. This allows the pump(s) to warm up and eliminates frequent starting of the pump(s) which can cause premature coupling failure and breakdown of electrical components. The pump(s) will continue to operate after the vacuum level has been satisfied. In order to maintain the desired vacuum level, a vacuum relief valve is usually supplied with the system. If a vacuum relief valve is not supplied with the system and the vacuum level is critical, a relief valve must be installed.

- If the pump(s) are not alternating and/or are frequent starting, one of the electrical components is probably defective. Contact the factory for a replacement.

ALARM CONDITIONS:

The following is a description of how alarm conditions will affect the operation of the system.

- If a **"Lag pump in operation"** alarm is installed in the panel, observe the following. Such an alarm is usually only supplied with medical packages. The alarm consists of a flashing light (usually a bubble light located on the top of the panel) and an audible alarm. The alarm will trigger when the "lag" pump starts up. The alarm will not affect the operation of the system. The light will flash and the audible alarm will sound. The audible alarm can only be silenced by physically pushing the "alarm silence" button. This will not stop the lag pump on light from flashing. The flashing light can be reset by physically pressing the "alarm reset" button. Note: If the lag pump is still operating when the "silence" or "reset" buttons are pressed, the alarm will automatically restart until the lag pump is no longer operating.

- **"Transformer failure" light** (optional). Only installed if more than one control voltage transformer is supplied. If the transformer failure light is illuminated, one of the transformers has malfunctioned and another one has picked up. As long as a back-up transformer is available, the above alarm will not affect the operation of the system. If both transformers fail, the system will shut down.

- **"High temp" light.** If the high temperature light illuminates, the affected pump will shut down unless otherwise specified at time of purchase of the equipment. The backup pump(s) will continue to operate unless a high temperature (or other) alarm occurs in those pump(s).

- **"Low level" light** (optional). If the low oil level light is illuminated, the affected pump will shut down. The backup pump(s) will continue to operate unless a similar condition occurs in those pump(s).

FLOTECT™ MODEL L-6 FLOAT SWITCH

Installation and Operating Instructions

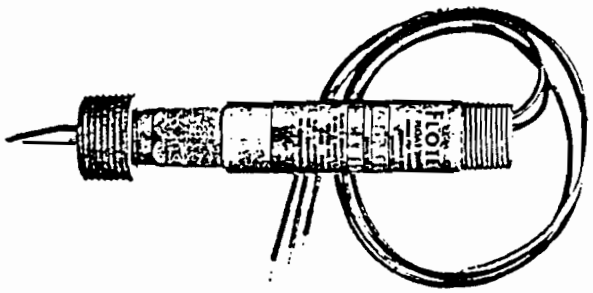

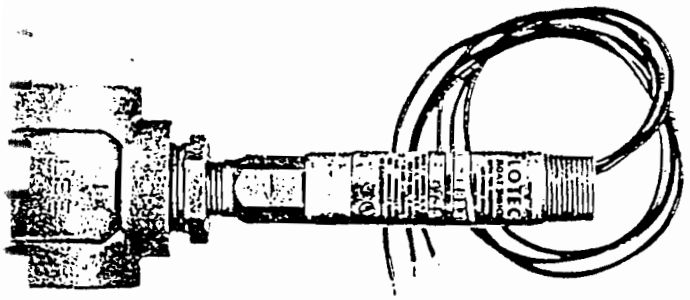

Explosion-Proof; U.L. and C.S.A. Listed -
Class I, Groups *A, B, C & D
Class II, Groups E, F & G
CENELEC: EExd IIC T6 (T amb=75°C)
*(Group A, stainless steel body only)

PHYSICAL DATA

Temperature Limit: 220°F (105°C) maximum
Maximum Pressure: See chart below
Switches: One or two SPDT snap switches
Electrical Rating: U.L.: 5A @ 125/250 VAC.
C.S.A. and CENELEC: 5A @ 125/250 VAC, 5A resistive, 3A inductive @ 30 VDC.
Optional ratings: MV option—Gold contacts for dry circuits. Rated 0.1A @ 125 VAC MT option: 400°F (205°C) 5A @ 125/250 VAC (not listed).
Wiring Connections: 3-18" (460mm) wire leads, 18 ga.
CENELEC models only: push-in type terminal blocks
Black = common, blue = N.O., red = N.C.
Minimum Specific Gravity:
Polypropylene float - 0.9
Round SS float - 0.7
Cylindrical SS float - 0.5
Switch Body: Brass 3/4" NPT conduit connection.
For SS switch body, change model no. to L6EPS.
Piping/Mounting Connection: 1" NPT
Installation: Horizontal, index arrow pointing down.
Weight: 1 lb. (.5 KG); w/external chamber 1-3/4 lb. (.8 KG)

WETTED MATERIALS CHART

Model	Brass	Bronze	Ceramic	Polypropylene	301SS	303SS	304SS
B-S-3-A	X		X		X		X
-S-3-B	X	X	X	X	X		
-S-3-C	X		X		X		X
B-S-3-H	X	X	X		X		X
B-S-3-O	X		X	X	X		
-S-3-A			X	X	X		X
-S-3-C			X		X	X	X
S-S-3-L			X		X	X	X
-S-3-O			X	X	X	X	
-S-3-S			X	X	X	X	

MAXIMUM PRESSURE CHART

Model Number	Float	Pressure Rating PSIG (KG/CM²)
L6EPB-B-S-3-A	Cylindrical SS	200 (14)
L6EPB-B-S-3-B	Polypropylene	250 (18)
L6EPB-B-S-3-C	Round SS	350 (25)
L6EPB-B-S-3-H	Round SS	250 (18)
L6EPB-B-S-3-O	Polypropylene	1000 (70)
L6EPB-S-S-3-A	Cylindrical SS	200 (14)
L6EPB-S-S-3-C	Round SS	350 (25)
L6EPB-S-S-3-L	Round SS	350 (25)
L6EPB-S-S-3-O	Polypropylene	2000 (140)
L6EPB-S-S-3-S	Polypropylene	2000 (140)

INSTALLATION:

Unpack switch and remove any packing material found inside lower housing or float chamber.

Switch must be installed with body in a horizontal plane and arrow on side pointing down.

If switch has an external float chamber (tee), connect it to vertical sections of 1" NPT pipe installed outside vessel walls at appropriate levels. If unit has no external float chamber, it must be mounted in a 1" NPT half coupling welded to the vessel wall. The coupling must extend through the wall.

Inspect and clean wetted parts at regular intervals.

ELECTRICAL CONNECTIONS:

Connect wire leads in accordance with local electrical codes and switch action required. N.O. contacts will close and N.C. contacts will open when liquid level causes float to rise. They will return to "normal" condition on decreasing liquid level. Black = common, Blue = N.O. and Red = N.C.

For units supplied with both internal and external grounds, the ground screw inside the housing must be used to ground the control. The external ground screw is for supplementary bonding when allowed or required by local code. Some CSA listed models are furnished with a separate green ground wire. Such units must be equipped with a junction box, not supplied but available on special order.

CENELEC certified models include a junction box. Cable should enter enclosure through an approved EX cable gland, not supplied. Push stripped and tinned leads into appropriate openings in terminal block(s). To connect fine stranded leads or to remove any wire, depress spring release with small screwdriver first.

All wiring, conduit and enclosures must meet applicable codes for hazardous areas. Conduits and enclosures must be properly sealed. For outdoor or other locations where temperatures vary widely, precautions should be taken to prevent condensation inside switch or enclosure. Electrical components must be kept dry at all times. CAUTION: To prevent ignition of hazardous atmospheres, disconnect the device from the supply circuit before opening. Keep assembly tightly closed when in use.

Dimensions on reverse

W.E. ANDERSON DIV., DWYER INSTRUMENTS, INC.
P.O. BOX 358 • MICHIGAN CITY, INDIANA 46360, U.S.A.
Telephone 219/879-8000
Fax 219/872-9057

FLOTECT. MODEL L-6 FLOAT SWITCH — DIMENSION DRAWINGS

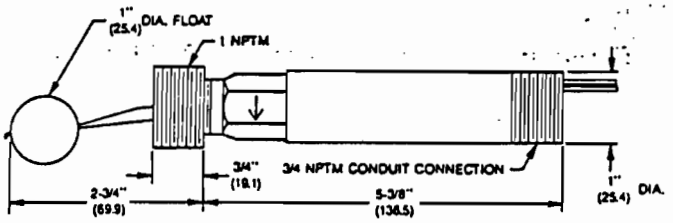

Polypropylene Float

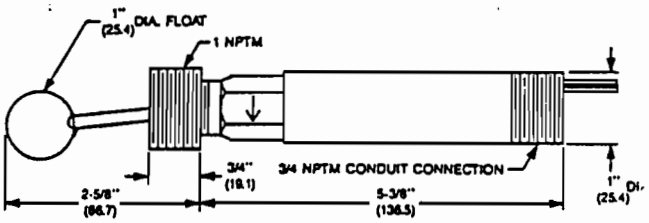

Round Stainless Steel Float

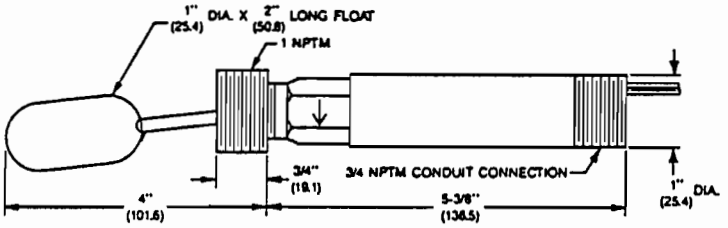

Cylindrical Stainless Steel Float

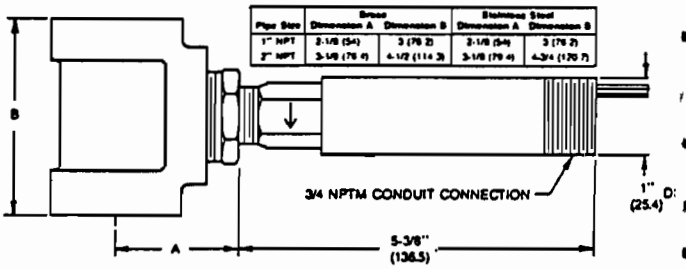

With External Float Chamber (Tee)

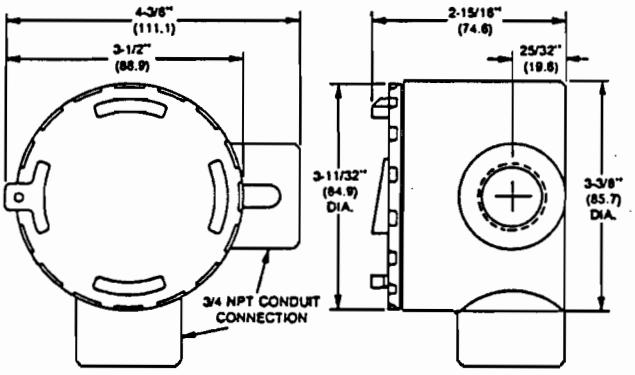

CSA, CENELEC Conduit Enclosure

Limited Warranty: The Seller warrants all Dwyer Instruments and equipment to be free from defects in workmanship or material under normal use and service for a period of one year from date of shipme Liability under this warranty is limited to repair or replacement F.O.B. factory of any parts which prove to be defective within that time or repayment of the purchase price at the Seller's opinion provic the instruments have been returned, transportation prepaid, within one year from the date of purchase. All technical advice, recommendations and services are based on technical data and informat which the Seller believes to be reliable and are intended for use by persons having skill and knowledge of the business, at their own discretion. In no case is Seller liable beyond replacement of equipm F.O.B. factory or the full purchase price. This warranty does not apply if the maximum ratings label is removed or if the instrument or equipment is abused, altered, used at ratings above the maximum specifi or otherwise misused in any way.

THIS EXPRESS LIMITED WARRANTY IS IN LIEU OF AND EXCLUDES ALL OTHER REPRESENTATIONS MADE BY ADVERTISEMENTS OR BY AGENTS AND ALL OTHER WARRANTIES, BOTH EXPRE AND IMPLIED. THERE ARE NO IMPLIED WARRANTIES OF MERCHANTABILITY OR OF FITNESS FOR A PARTICULAR PURPOSE FOR GOODS COVERED HEREUNDER.

Buyers Remedies: THE BUYER'S EXCLUSIVE AND SOLE REMEDY ON ACCOUNT OF OR IN RESPECT TO THE FURNISHING OF NONCONFORMING OR DEFECTIVE MATERIAL SHALL BE TO SECU REPLACEMENT THEREOF AS AFORESAID. THE SELLER SHALL NOT IN ANY EVENT BE LIABLE FOR THE COST OF ANY LABOR EXPENDED ON ANY SUCH MATERIAL OR FOR ANY SPECI DIRECT, INDIRECT OR CONSEQUENTIAL DAMAGES TO ANYONE BY REASON OF THE FACT THAT IT SHALL HAVE BEEN NON-CONFORMING OR DEFECTIVE.

W.E. ANDERSON DIV., DWYER INSTRUMENTS, INC.
P.O. Box 358
Michigan City, IN 46360
Phone: 219/879-8000
Fax: 219/872-9057

©Copyright 1993, Dwyer Instruments, Ir

FR 82-440726-(
Printed in U.S.A. 10/

INSTALLATION AND MAINTENANCE INSTRUCTIONS

2-WAY INTERNAL PILOT OPERATED SOLENOID VALVES
DIAPHRAGM TYPE — 1, 1 1/4 AND 1 1/2 NPT
NORMALLY CLOSED OPERATION

BULLETINS
8210
8211

Form No. V5455R3

DESCRIPTION

Bulletin 8210 valves are 2-way, normally closed internal pilot operated solenoid valves, and are provided with a TYPE 1, General Purpose Solenoid Enclosure. Bulletin 8211 valves are the same as Bulletin 8210's with the exception of the pilot valve being provided with a combination Watertight & Explosion-proof Solenoid Enclosure designed to meet Enclosure TYPE 4-Watertight, TYPE 7 (C & D) — Explosion-proof Class I, Groups C & D and TYPE 9 (E, F & G) — Dust Ignition-proof Class II, Groups E, F & G. For Installation and Maintenance Instructions for the Watertight & Explosion-proof Solenoid Enclosure (A-C Construction) see Form No. V5381.

OPERATION

Normally Closed: Valve is closed when solenoid is de-energized. Valve opens when solenoid is energized.

IMPORTANT: No minimum operating pressure differential required.

MANUAL OPERATOR (Optional)

Valves with Suffix "MO" in the catalog number are provided with a screw type manual operator which allows manual operation when desired or during an interruption of electrical power. To operate manual operator, remove operator cap and gasket. To open valve, turn stem at base of body clockwise as far as possible. Do not force operator stem. Valve will then be in the same position as when the solenoid is energized. Disengage manual operator by turning stem counterclockwise as far as possible before operating electrically. CAUTION: Stem must be fully retracted before operating valve electrically. Replace manual operator cap gasket and cap.

INSTALLATION

Check nameplate for correct catalog number, pressure, voltage and service.

TEMPERATURE LIMITATIONS

For maximum valve ambient and fluid temperature, refer to chart below. For higher ambient and fluid temperature limitations, consult factory. Check catalog number prefix on nameplate to determine maximum temperatures.

A-C CONSTRUCTION ONLY			
COIL CLASS	CATALOG NUMBER PREFIX	MAXIMUM AMBIENT TEMP. °F	MAXIMUM FLUID TEMP. °F
A	NONE	77	180
F	FT	104	200
H	HT	140	200

POSITIONING

A-C Construction (Alternating Current): Valve is designed to perform properly when mounted in any position. However, for optimum life and performance, the solenoid should be mounted vertical and upright so as to reduce the possibility of foreign matter accumulating in the core tube area.

D-C Construction (Direct Current): Valve must be mounted with solenoid vertical and upright.

PIPING

Connect piping to valve according to flow markings on valve body. Apply pipe compound sparingly to male pipe threads only; if applied to valve threads, it may enter the valve and cause operational difficulty. Pipe strain should be avoided by proper support and alignment of piping. When tightening the pipe, do not use valve or solenoid as a lever. Wrenches applied to valve body or piping are to be located as close as possible to connection point.

IMPORTANT: For the protection of the solenoid valve, install a strainer or filter suitable for the service involved in the inlet side as close to the valve as possible. Periodic cleaning is required depending on service conditions. See Bulletins 8600, 8601 and 8602 for strainers.

WIRING

Wiring must comply with Local and National Electrical Codes. For valves equipped with a watertight & explosion-proof solenoid enclosure, the electrical fittings must be approved for use in approved hazardous locations. Housings for all solenoids are provided with connections or accommodations for 1/2 inch conduit. Both the general purpose and watertight & explosion-proof solenoid enclosure may be rotated to facilitate wiring by loosening the cover or removing the retaining cap or clip. CAUTION: When metal retaining clip disengages, it will spring upward. Rotate enclosure to desired position. Tighten cover on watertight & explosion-proof solenoid enclosure to 135 ± 10 inch-pounds [15,3 ± 1,1 newton meters].

SOLENOID TEMPERATURE

Standard catalog valves are supplied with coils designed for continuous duty service. When solenoid is energized for a long period, the solenoid enclosure becomes hot and can be touched by the hand for only an instant. This is a safe operating temperature. Any excessive heating will be indicated by the smoke and odor of burning coil insulation.

MAINTENANCE

Warning: Turn off electrical power supply and depressurize valve before making repairs. It is not necessary to remove the valve from the pipeline for repairs.

CLEANING

A periodic cleaning of all solenoid valves is desirable. The time between cleanings will vary depending upon medium and service conditions. In general, if the voltage to the coil is correct, sluggish valve operation, excessive noise or leakage will indicate that cleaning is required. Be sure to clean valve strainer when cleaning solenoid valve.

PREVENTIVE MAINTENANCE

1. Keep the medium flowing through the valve as free from dirt and material as possible.
2. While in service, operate the valve at least once a month to insure proper opening and closing.
3. Periodic inspection (depending on medium and service conditions) of internal valve parts for damage or excessive wear is recommended. Thoroughly clean all parts. Replace any parts that are worn or damaged.

IMPROPER OPERATION

1. Faulty Control Circuit: Check the electrical system by energizing the solenoid. A metallic click signifies the solenoid is operating. Absence of the click indicates loss of power supply. Check for loose or blown-out fuses, open-circuited or grounded coil, broken lead wires, terminals or splice connections.
2. Burned-Out Coil: Check for open-circuited coil. Replace coil if necessary.
3. Low Voltage: Check for voltage across the coil leads. Voltage must be at least 85% of nameplate rating.
4. Incorrect Pressure: Check valve pressure. Pressure to valve must be within range specified on nameplate.
5. Excessive Leakage: Disassemble valve and clean all parts. Replace worn or damaged parts with a complete Spare Parts Kit for best results.

COIL REPLACEMENT

Turn off electrical power supply and disconnect coil lead wires.

A-C Construction (Refer to Figure 2.)

1. Remove retaining cap or clip, nameplate and cover. CAUTION: When metal retaining clip disengages, it will spring upward.
2. Slip yoke containing coil, sleeves and insulating washers off the solenoid base sub-assembly. Insulating washers are omitted when a molded coil is used.
3. Slip coil, sleeves and insulating washers from yoke.
4. Reassemble in reverse order of disassembly paying careful attention to exploded view provided for identification and placement of parts.

Form No. V5455R3 PRINTED IN U.S.A. 1982 Automatic Switch Co. FLORHAM PARK, NEW JERSEY 07932

© Automatic Switch Co.

D-C Construction (Refer to Figure 3.)

1. Unscrew cover with nameplate and retaining ring attached. Two wrenching flats are provided on the housing to hold it securely in place while cover is being removed or replaced.
2. Slip spring, flux washer, insulating washer and coil off the solenoid base sub-assembly. Insulating washers are omitted when a molded coil is used.
3. Reassemble in reverse order of disassembly paying careful attention to exploded views provided for identification and placement of parts.
4. For greasing requirements of watertight & explosion-proof solenoid enclosure, refer to the paragraph below before reassembly.

CAUTION: Solenoid must be fully reassembled as the housing and internal parts are part of and complete the magnetic circuit. Be sure to replace insulating washer at each end of non-molded coil.

NOTE: Installation and Maintenance of Watertight & Explosion-proof equipment requires more than ordinary care to insure safe performance. All finished surfaces of the solenoid are constructed to provide a flameproof seal. Be sure that the surfaces are wiped clean before replacing. If watertight, as well as explosion-proof is a requirement, grease the joints of the watertight & explosion-proof solenoid enclosure with DOW CORNING® 111 Compound lubricant or an equivalent high-grade silicone grease. Grease joints thoroughly covering all surfaces. Follow this procedure each time the solenoid enclosure is disassembled.

VALVE DISASSEMBLY (Refer to Figure 1, 2 and 3)

Depressurize valve and turn off electrical power supply. Disconnect conduit and lead wires when necessary. Proceed in the following manner:

1. For the general purpose solenoid enclosure, remove the retaining cap or clip and slip the entire solenoid enclosure off the solenoid base sub-assembly. CAUTION: When metal retaining clip disengages, it will spring upward. For watertight & explosion-proof construction or general purpose D-C Construction, follow Disassembly Instructions under "Coil Replacement" D-C Construction.
2. Unscrew solenoid base sub-assembly. For D-C Construction, a special wrench adapter (Order No. 168-146-1) is required. Remove bonnet gasket.
3. Remove bonnet screws, valve bonnet, spring retainer (A-C Construction only) core spring, core/diaphragm sub-assembly and body gasket.
4. For valves equipped with a manual operator, remove cap, cap gasket, and bonnet. Remove stem assembly from bonnet.
5. All parts are now accessible for cleaning or replacement. Replace worn or damaged parts with a complete Spare Parts Kit for best results.

VALVE REASSEMBLY

1. Reassemble in reverse order of disassembly paying careful attention to exploded views provided for identification and placement of parts.
2. Replace body gasket and core/diaphragm sub-assembly. Locate bleed hole in core/diaphragm sub-assembly directly over valve outlet. For 1 1/2 NPT construction, locate bleed hole in core/diaphragm sub-assembly approximately 30° from valve outlet.
3. Replace core spring and spring retainer (A-C Construction only). Install small end of core spring in core first, wide end protruding from top of core. For D-C Construction, install core spring, small end down toward valve body.
4. Replace valve bonnet and bonnet screws. Hand tighten bonnet screws. IMPORTANT: PRESS FIRMLY DOWN ON CORE/DIAPHRAGM SUB-ASSEMBLY TO SEAT DIAPHRAGM ASSEMBLY AGAINST VALVE SEAT. WHILE HOLDING THIS POSITION, TIGHTEN BONNET SCREWS IN A CRISSCROSS MANNER TO 144 ± 15 INCH-POUNDS [16,3 ± 1,7 newton meters].
5. Replace bonnet gasket and solenoid base sub-assembly. Torque solenoid base sub-assembly to 175 ± 25 inch-pounds [19,8 ±2,8 newton meters]. For D-C Construction, the solenoid base sub-assembly must be placed inside the housing before assembling into the valve body. Before doing this, refer to greasing instructions under "Coil Replacement".
6. Reassemble remaining solenoid parts according to instructions under "Coil Replacement" and exploded views provided. For D-C Construction, (watertight & explosion-proof solenoid enclosure) be sure to torque cover to 135 ± 10 inch-pounds [15,2 ± 1,1 newton meters].
7. For valves provided with a manual operator, replace stem assembly and bonnet (with gaskets). Torque bonnet to 75 ± 10 inch-pounds [8,5 ± 1,1 newton meters]. Replace cap gasket and cap.
8. After maintenance, operate the valve a few times to be sure of proper opening and closing.

SPARE PARTS KITS

Spare Parts and Coils are available for ASCO valves.
Parts marked with an asterisk (*) are supplied in Spare Parts Kits.

ORDERING INFORMATION FOR SPARE PARTS KITS

When Ordering Spare Parts or Coils, Specify Valve Catalog Number, Serial Number, Voltage and Hertz A-C, or Voltage D-C.

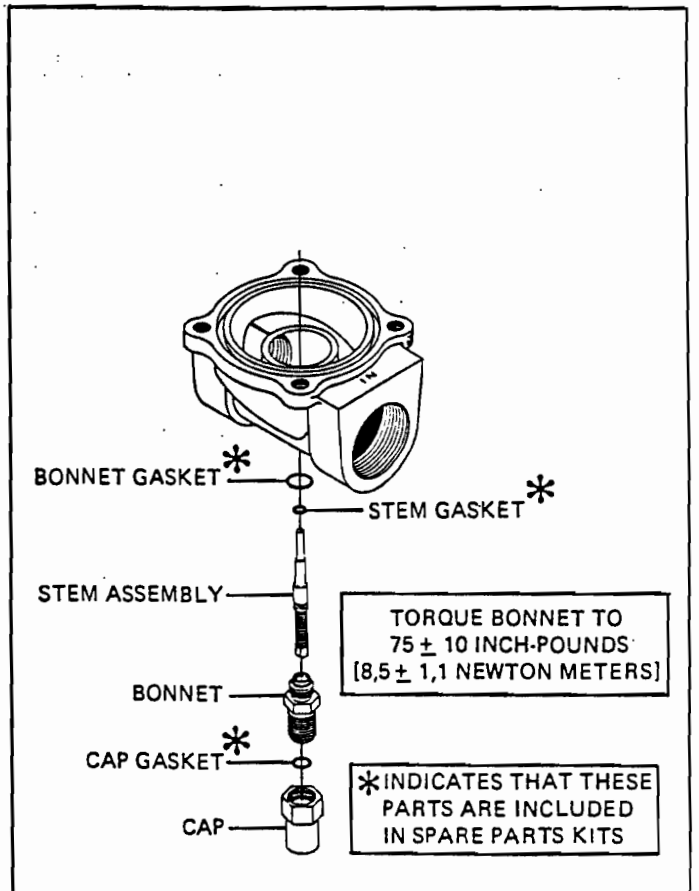

Figure 1. Manual Operator (Optional Feature)

ASCO Valves
Automatic Switch Co. FLORHAM PARK, NEW JERSEY 07932 Form No. V5455R3 PRINTED IN U.S.A. 1982
Automatic Switch Co. 1982 ALL RIGHTS RESERVED

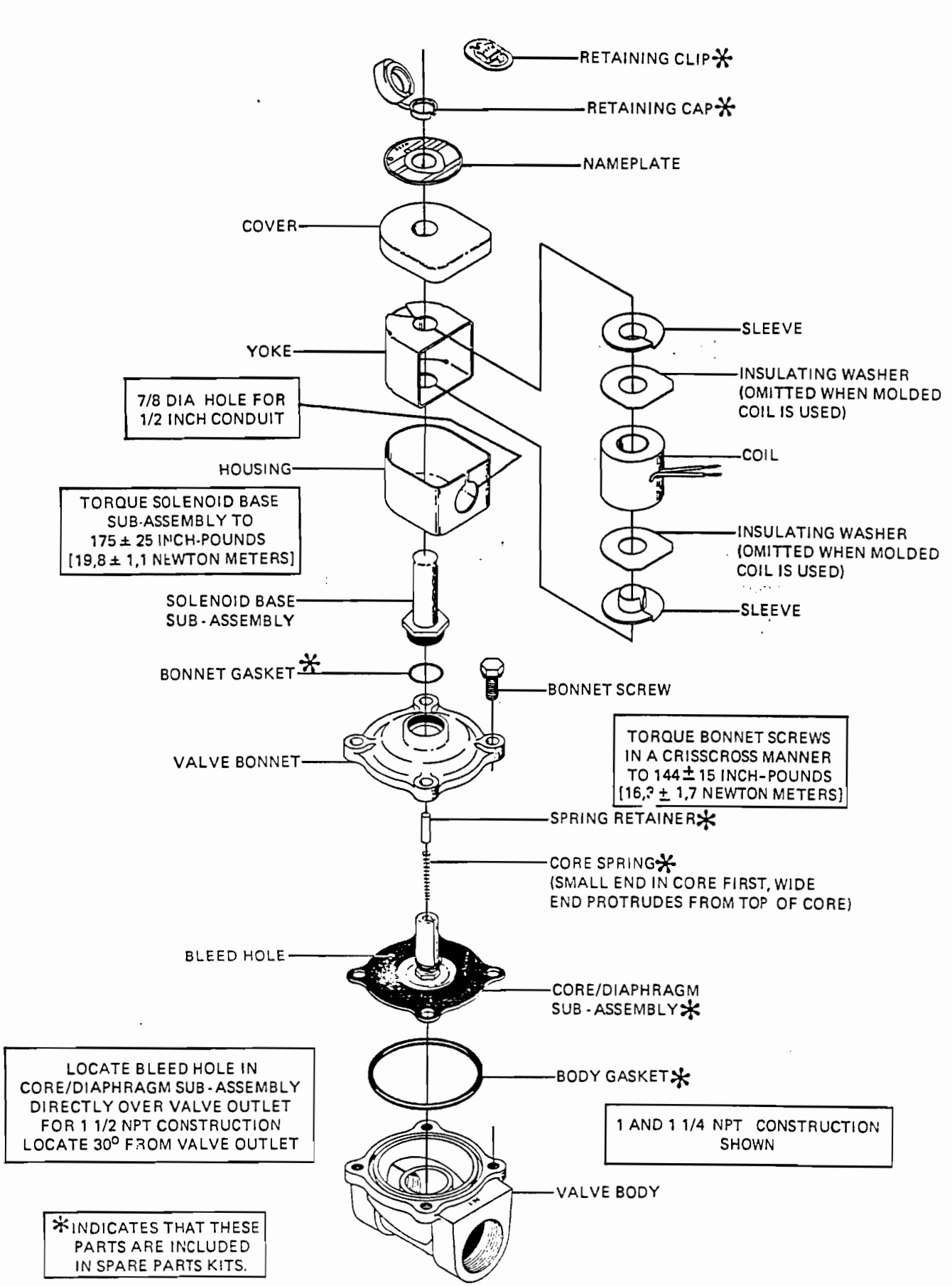

Figure 2. Bulletin 8210 A-C Construction (Alternating Current)
General purpose solenoid enclosure shown. For watertight & explosion-proof solenoid enclosure used on Bulletin 8211, see Form No. V5381.

© Automatic Switch C... ALL RIGHTS RES...

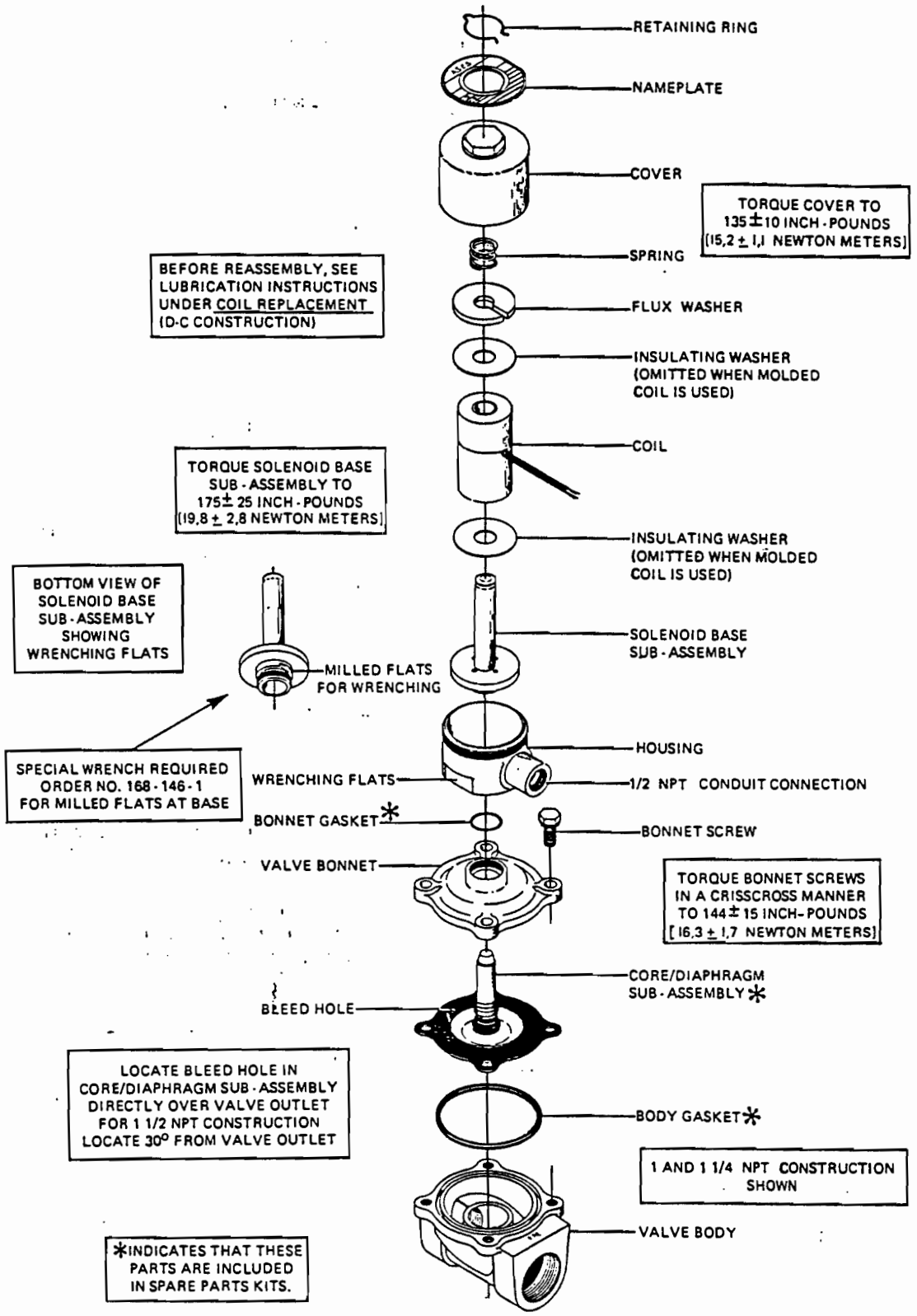

Figure 3. Bulletin 8210 and 8211 — D-C Construction (Direct Current)
Solenoid enclosure shown is used for general purpose and watertight & explosion-proof.
For watertight & explosion-proof requirements, see note under "Coil Replacement".

ASCO Valves
Automatic Switch Co. FLORHAM PARK, NEW JERSEY 07932 Form No. V5455R3 PRINTED IN U.S.A. 1982
© Automatic Switch Co. 1982 ALL RIGHTS RESERVED

Installation, Operation And Care Of Reliance® Standard Integral Horsepower Induction Motors

- 180 – 449 Frames

A-C MOTORS

We're keyed to your need.

Instruction Manual B-3620-21

June, 1993

RELIANCE ELECTRIC

MAINTENANCE AND REPAIR

WARNING

TO INSURE THAT THE DRIVEN EQUIPMENT IS NOT UNEXPECTEDLY STARTED, TURN OFF AND LOCKOUT OR TAG POWER SOURCE BEFORE PROCEEDING. FAILURE TO OBSERVE THESE PRECAUTIONS COULD RESULT IN BODILY INJURY

The fundamental principle of electrical maintenance is KEEP THE APPARATUS CLEAN AND DRY. This requires periodic inspection of the motor, the frequency depending upon the type of motor and the service.

The following should be checked at regular intervals:

WARNING

DO NOT USE GASOLINE OR OTHER FLAMMABLE SOLVENTS WHEN CLEANING THE MOTOR. FAILURE TO OBSERVE THIS PRECAUTION COULD RESULT IN BODILY INJURY.

1. Windings should be dry and free of dust, grease, oil, and dirt. Windings may be cleaned by suction cleaners or by wiping. Nozzles on suction type cleaners should be non-metallic. Gummy deposits of dirt and grease may be removed by using a commercially available low volatile solvent.
2. Terminal connections, assembly screws, bolts and nuts should be tight. They may loosen if motor is not securely bolted and tend to vibrate.
3. Insulation resistance of motors in service should be checked periodically at approximately the same temperature and humidity conditions to determine possible deterioration of the insulation. When such measurements at regular intervals indicate a wide variation, the cause should be determined. Motor should be reconditioned if the motor has been subjected to excessive moisture by re-winding or re-insulating if necessary. Enclosed motors require very little attention. Be sure that external air chamber of fan-cooled motors does not become clogged with foreign material which will restrict passage of air.

DISASSEMBLY

If it becomes necessary to disassemble the motor, care should be taken not to damage the stator windings as the insulation may be injured by improper or rough handling.

Precautions to keep bearings clean should be exercised. Before removing either end shield:

1. Disconnect motor from power source. Tag the leads to insure proper reconnection.
2. Remove motor from mounting base.
3. Mark end brackets relative to position on frame so they can be easily replaced.

REMOVING BRACKETS AND ROTOR

4. Remove bearing cartridge nuts or screws. (If used)
5. Remove front end bracket bolts.
6. Pull bracket.
7. Remove back end bracket in same manner.
8. Remove rotor.

REMOVING AND REPLACING BALL BEARINGS

BEARINGS SHOULD NOT BE REMOVED UNLESS THEY ARE TO BE REPLACED. WHEN REMOVAL IS NECESSARY, USE A BEARING PULLER. A BEARING PULLER MAY BE RIGGED BY USING A METAL PLATE, WITH HOLES DRILLED TO MATCH THE TAPPED HOLES IN THE INNER CAP. USE CARE TO KEEP THE PRESSURE EQUAL TO PREVENT BREAKING THE CAP.

TO INSTALL A BEARING, HEAT THE BEARING IN AN OVEN AT 250°F. THIS WILL EXPAND THE INNER RACE, ALLOWING IT TO SLIP OVER THE BEARING SEAT. ALL BEARINGS MUST BE REPLACED WITH THE IDENTICAL PART USED BY RELIANCE. IN MANY CASES SPECIAL BEARINGS ARE USED WHICH CANNOT BE IDENTIFIED BY MARKINGS ON BEARING. IN ALL CASES, WHEN REPLACING BEARINGS, USE MARKINGS ON BEARINGS AND MOTOR IDENTIFICATION NUMBER TO OBTAIN CORRECT REPLACEMENT BEARING.

THE MAJORITY OF BEARINGS USED NOW HAVE A C3 INTERNAL FIT.

REASSEMBLY

Follow reverse procedure as outlined for Disassembly. Having marked the brackets in the original position, replace as marked.

OPERATION

WARNING

SURFACE TEMPERATURES OF MOTOR ENCLOSURE MAY REACH TEMPERATURES WHICH CAN CAUSE DISCOMFORT OR INJURY TO PERSONNEL ACCIDENTALLY COMING INTO CONTACT WITH HOT SURFACES. WHEN INSTALLING, PROTECTION SHOULD BE PROVIDED BY USER TO PROTECT AGAINST ACCIDENTAL CONTACT WITH HOT SURFACE. FAILURE TO OBSERVE THIS PRECAUTION COULD RESULT IN BODILY INJURY.

WARNING

ROTATING PARTS, SUCH AS COUPLINGS, PULLEYS, INTERNAL-EXTERNAL FANS AND UNUSED SHAFT EXTENSIONS SHOULD BE PERMANENTLY GUARDED AGAINST ACCIDENTAL CONTACT WITH HANDS OR CLOTHING. FAILURE TO OBSERVE THIS PRECAUTION COULD RESULT IN BODILY INJURY.

Due to the inherent characteristics of insulating materials, abnormally high temperatures shorten the operating life of electrical apparatus. The total temperature, not the temperature rise, should be the measure of safe operation. The class of insulation determines the maximum safe operating temperature. Aging of insulation occurs at an accelerated rate at abnormally high temperatures. A general rule for gauging the effect of excessive heat is that for each 10°C. rise in temperature above the maximum limit for the insulation, the life of the insulation is halved.

Unbalanced voltage or single-phase operation of polyphase machines may cause excessive heating and ultimate failure. It requires only a slight unbalance of voltage applied to a polyphase motor to cause large unbalance currents and resultant overheating.

Periodic checks of phase voltage, frequency and power consumption of a motor while in operation are recommended; such checks assure the correctness of frequency and voltage applied to the motor and yield an indication of the load offered by the apparatus which the motor drives.

Comparisons of this data with previous no-load and full-load power demands will give an indication of the performance of the complete machine. Any serious deviations should be investigated and corrected.

Stator troubles can usually be traced to one of the following causes:

Worn bearings	Operating single-phase
Moisture	Poor insulation
Overloading	Oil and dirt

Dust and dirt are usually contributing factors. Some forms of dust are highly conductive and contribute materially to insulation breakdown. The effect of dust on the motor temperature through restriction of ventilation is a principal reason for keeping the windings clean.

Squirrel-cage rotors are rugged and, in general, give little trouble. The first symptom of a defective rotor is lack of torque. This may cause a slowing down in speed accompanied by a growling noise or perhaps failure to start the load.

This is caused by an open or high resistance joint in the rotor bar circuit. Such a condition can generally be detected by looking for evidence of localized heating.

LUBRICATION OF BEARINGS

Motors covered by this Instruction Manual are equipped with several types of bearings. This description covers regreasable anti-friction bearings only. Non-regreasable ball bearings require no periodic maintenance. See I/M B-3654 for oil mist lubricated anti-friction bearing procedures.

GREASE LUBRICATED BEARINGS

This motor has been properly lubricated at the time of manufacture and it is not necessary to lubricate at time of installation unless the motor has been in storage for a period of six months or more.

Lubrication of anti-friction bearings should be done as a part of a planned maintenance schedule. The Recommended Lubrication Interval should be used as a guide to establish this schedule.

Cleanliness is important in lubrication. Any grease used to lubricate anti-friction bearings should be fresh and free from contamination. Similarly, care should be taken to properly clean the grease inlet area of the motor to prevent grease contamination.

RECOMMENDED LUBRICANT

For motors operating in ambient temperatures shown below, use the following lubricant or its equal:

BALL BEARING MOTORS

OPERATING TEMP. –25°C (–15°F) to 50°C (120°F)

CHEVRON OIL	SRI NO. 2
EXXON	UNIREX N2
SHELL OIL CO.	DOLIUM R
TEXACO, INC.	PREMIUM RB

MINIMUM STARTING TEMPERATURE –60°C (–76°F)

SHELL OIL CO.	AEROSHELL 7

ROLLER BEARING MOTORS

OPERATING TEMP.–25°C (–1 5°F) to 50°C (120°F)

CHEVRON OIL	BLACK PEARL EP NO. 2
TEXACO, INC.	PREMIUM RB

LUBRICATION PROCEDURE

Reliance anti-friction bearings may be lubricated with the motor running or stationary. Stationary with the motor warm is preferred.

1. Locate the grease inlet, clean the area and replace the pipe plug with a grease fitting, if the motor is not equipped with grease fittings.
2. If motor is equipped with grease drain plug, remove plug and loosen any hardened grease that may block drain.
3. Add the Recommended Volume of the Recommended Lubricant using a hand operated grease gun.
4. Run the motor for two hours.
5. Replace the pipe plug in grease drain.
6. Grease may not relieve from drain. Use only volume shown in Table 3.

LUBRICATION INSTRUCTIONS

1. Select Service Condition from Table 1.
2. Select Lubrication Frequency from Table 2.
3. Select Lubrication Volume from Table 3.
4. Lubricate the motor at the required frequency with the required lubricant volume in accordance with LUBRICATION PROCEDURE.

NOTE: Mixing lubricants is not recommended due to possible incompatibility. If it is desired to change lubricant, follow instructions for lubrication and repeat lubrication a second time after 100 hours of service. Care must be taken to look for signs of lubricant incompatibility, such as extreme soupiness visible from the grease relief drain area, or from the shaft opening.

SERVICE CONDITIONS

Table 1

Standard Conditions	Eight hours per day, normal or light loading, clean @ 40°C (100°F) maximum ambient.
Severe Conditions	Twenty-four hour per day operation or shock loading, vibration, or in dirt or dust @ 40–50°C (100–120°F) ambient
Extreme Conditions	Heavy shock or vibration, or dust.

LUBRICATION FREQUENCY

Table2

BALL BEARINGS				
Speed	Frame	Standard Conditions	Severe Conditions	Extreme Conditions
1800 RPM and Slower	182 Thru 215	3 Years	1 Year	6 Months
	254 Thru 365	2 Years	6 to 12 Months	3 Months
	404 Thru 449	1 Year	6 Months	1 to 3 Months
3600 RPM	ALL	6 Months	3 Months	1 Month
ROLLER BEARINGS				
For Roller Bearings divide the time periods above by 2.				

LUBRICATION VOLUME

Table3

Frame Size	Volume in Cubic Inches	
	1800 RPM And Slower	3600 RPM
182 Thru 215	0.5	0.5
254 Thru 286	1.0	1.0
324 Thru 365	1.5	1.5
404 Thru 449	2.5	1.5

REPLACEMENT BEARINGS

Your maintenance program will not be complete without including spare bearings. It must be remembered that the bearing is a wearable component and therefore must eventually be replaced. To insure that you are able to maintain original operation, **we recommend the purchase of spares directly from Reliance Electric.**

All bearings used in Reliance motors are subject to exact specifications and tests necessary to satisfy performance requirements. In this manner, it is possible to duplicate your present bearing. Markings on the bearing do not indicate complete specifications.

Service Centers

ALABAMA
Birmingham Service Center
3100 Pinson Valley Parkway
Birmingham, Alabama 35217
205-841-8377

ARIZONA
Phoenix Service Center
3550 S.16th Street
Phoenix, Arizona 85040
602-243-1791

CALIFORNIA
Anaheim Service Center
1025 North Sabina Street
Anaheim, California 92801
714-772-4773

San Jose Service Center
341 North Montgomery Street
San Jose, California 95110
408-287-4060

COLORADO
Tree Electric Service Center
1020 South Lipan Street
Denver, Colorado 80223
303-935-4615

ILLINOIS
Chicago Service Center
17001 South Vincennes Avenue
Thornton (Chicago), Illinois 60476
312-877-5310

LOUISIANA
Monroe Service Center
2304 Ruffin Drive
Monroe, Louisiana 71203
318-322-1474

Shreveport Service Center
1245 North Hearne
Shreveport, Louisiana 71107
318-222-9431

MEXICO SERVICE CENTER
Avenida Primero de Mayo 230
Naucalpan de Juarez
Estado de Mexico C.P. 53630
(52)(5) 576-6984

OHIO
Cleveland Service Center
4950 East 49th Street
Cleveland, Ohio 44125
216-266-7274

Cincinnati Service Center
350 Dayton Street
Hamilton, Ohio 45011
513-863-8816

OREGON
Portland Service Center
2315 N.W. 21st Place
Portland, Oregon 97210
503-226-4951

PENNSYLVANIA
Philadelphia Service Center
3240 South 78th Street
Philadelphia, Pennsylvania 19153
215-365-1500

Pittsburgh Service Center
320 Museum Road
Washington, Pennsylvania 15301
412-225-2900

SOUTH CAROLINA
Rock Hill Service Center
1332 Firetower Road
Rock Hill, South Carolina 29730
803-324-3700

TEXAS
Houston Service Center
1500 E. Main Street
LaPorte, Texas 77571
713-471-4611

WYOMING
Gillette Service Center
811 Edwards Road
Gillette, Wyoming 82716
307-682-0035

Rock Springs Service Center
839 Elk
Rock Springs, Wyoming 82901
307-362-6697

For a complete listing of all Reliance Authorized Service Centers, call 1-800-321-2795 or in Ohio call 1-216-266-2688.

Reliance Electric / 24701 Euclid Avenue / Cleveland, Ohio 44117 / (216) 266-7000

RELIANCE ELECTRIC

APPENDIX A-2

MANUFACTURER'S OPERATIONS AND MAINTENANCE MANUAL FOR HEAT EXCHANGERS

SLEEVE BEARINGS: Reoil with 10 drops of 5W30 oil annually, after three years of normal service.

PERMANENTLY LUBRICATED SEALED BALL BEARINGS: Require no attention during the life of the bearing.

BALL BEARINGS: With provision for lubrication - see below.

1. Stop motor. Disconnect power and lock out of service.
2. Wipe clean all grease inlets.
3. Remove fill and drain plugs.
4. Check filler and drain hole for blockage and clean as necessary.
5. Add proper grease with hand pump grease gun. See Table 1 for relubrication intervals and for quantity of grease required.
6. Operate motor for 20 to 30 minutes while plugs are still removed.
7. Stop motor, wipe off any drained grease, and replace filler and drain plugs.
8. Motor is ready for operation.

SEASONAL SERVICE: The motor remains idle for a period of 6 months or more.

STANDARD SERVICE: 8 hours of operation per day, indoors, 100°F maximum ambient.

SEVERE SERVICE: Continuous operation under high ambient temperatures (100° to 150°F) and/or any of the following: dirty, moist locations, high vibration (above NEMA standards), heavy shock loading, or where shaft extension end is hot.

Table 1. Relubrication Time Intervals
(For motors with regreasing provisions).

Service Condition	NEMA FRAME SIZE			
	140-180		210-320	
	1800RPM and less	Over 1800 RPM	Over RPM and less	Over 1800 RPM
Standard	3 yrs.	6 months	2 yrs.	6 months
Severe	1 yr.	3 months	1 yr.	3 months
Seasonal	See note 2.			
Amount	1 to 2 pumps		2 to 3 pumps	

NOTE

1. For roller bearings divide the above intervals by 3.
2. Lubricate at the beginning of the season. Then follow service schedule above.
3. One (1) full pump from a standard hand pump grease gun approximately equals 0.06 fluid oz. (0.10 cu. in.).

Printed on recycled paper.

INSTALLATION, OPERATION & MAINTENANCE INSTRUCTIONS FOR 320 FRAME AND SMALLER MOTORS

WARNING

These instructions must be followed to ensure safe and proper installation, operation and maintenance of the motor. They should be brought to the attention of all persons who install, operate or maintain this equipment.

Failure to follow instructions and safe electrical procedures could result in serious injury or fatality. Disconnect all power and discharge all capacitors before servicing. Install and ground per local and national codes. Consult qualified personnel with questions or if repairs are required.

INSTALLATION

UNCRATING AND INSPECTION

After uncrating, check for any damage which may have been incurred in handling. The motor shaft should turn freely by hand. Repair or replace any loose or broken parts before attempting to use the motor.

Check to be sure that motor has not been exposed to dirt, grit, or excessive moisture in shipment or storage before installation.

Measure insulation resistance (see operation). Clean and dry the windings as required.

Never start a motor which has been wet without having it thoroughly dried.

SAFETY

Motors should be installed, protected and fused in accordance with latest issue of National Electrical Code, NEMA Standard Publication No. MG 2 and local codes.

Eyebolts or lifting lugs are intended for lifting the motor only. These lifting provisions should never be used when lifting or handling the motor with other equipment (i.e. pumps, gear boxes, fans or other driven equipment) as a single unit. Be sure the eyebolt is fully threaded and tight in its mounting hole.

Eyebolt lifting capacity rating is based on a lifting alignment coincident with the eyebolt centerline. Eyebolt capacity decreases as deviation from this alignment increases. See NEMA MG 2.

Frames and accessories of motors should be grounded in accordance with National Electrical Code (NEC) Article 430. For general information on grounding refer to NEC Article 250.

Rotating parts such as pulleys, couplings, external fans, unusual shaft extensions should be permanently guarded. Keep hands and clothing away from moving parts. Electrical repairs should be made by trained, qualified personnel only.

LOCATION

In selecting a location for the motor, consideration should be given to environment and ventilation. A motor with the proper enclosure for the expected operating condition should be selected.

The ambient temperature of the air surrounding the motor should not exceed 40°C (104°F) unless the motor has been especially designed for high ambient temperature applications. The free flow of air around the motor should not be obstructed.

The motor should never be placed in a room with a hazardous process, or where flammable gases or combustible material may be present, unless it it specifically designed for this type of service.

1. Dripproof (open) motors are intended for use indoors where atmosphere is relatively clean, dry and non-corrosive.
2. Totally enclosed motors may be installed where dirt, moisture and corrosion are present.
3. Totally enclosed - severe duty motors are recommended for extreme environmental conditions.
4. Explosion proof motors are built for use in hazardous locations as indicated by Underwriters' label on motor. Consult UL, NEC, and local codes for guidance.

FLOOR MOUNTING

Motors should be provided with a firm, rigid foundation, with the plane of four mounting pads flat within .010" for 56 to 210 frame; .015" from 250 through 320 frame. This may be accomplished by shims under the motor feet.

V-BELT DRIVE

1. Align sheaves carefully to avoid axial thrust on motor bearing. The drive sheave on the motor should be positioned toward the motor so it is as close as possible to the bearing.
2. When adjusting belt tension, make sure the motor is secured by all mounting bolts before tightening belts.
3. Adjust belt tension to belt manufacturers recommendations. Excessive tension will decrease bearing life.
4. Sheaves should be in accordance to NEMA Spec. MG-1 or as approved by the manufacturer for a specific application.

DIRECT CONNECTED DRIVE

Flexible or solid shaft couplings must be properly aligned for satisfactory operation. On flexible couplings, the clearance between the ends of the shafts should be in accordance with the coupling manufacturer's recommendations or NEMA standards for end play and limited travel in coupling.

Misalignment between direct connected shafts will cause increased bearing loads and vibration even when the connection is made by means of a flexible coupling. Excessive misalignment will decrease bearing life. Proper [illegible] specifications of the coupling being used, is critical.

1. All wiring, fusing, and grounding must comply with National Electrical Code and local codes.
2. To determine proper rotation and voltage connections, refer to the information and diagram on the nameplate, separate connection plate or decal. If the plate or decal has been removed, contact the manufacturer for assistance.
3. Use the proper size of line current protection and motor controls as required by the National Electrical Code and local codes. Recommended use is 125% of full load amps as shown on the nameplate for motors with 40°C ambient and a service factor over 1.0. Recommended use is 115% of full load amps as shown on the nameplate for all other motors. Do not use protection with larger capacities than recommended. Three phase motors must have all three phases protected.

Wire Size For 115 & 230 Volt Single Phase Circuits								
Distance - Motor To Fuse or Meter Box - Feet								
Motor	100 Ft.		200 ft.		300 Ft.		500 Ft.	
HP	115V.	230V.	115V.	230V.	115V.	230V.	115V.	230V.
1/4	#14	#14	#10	#12	#8	#10	#6	#8
1/3	#12	#14	#10	#12	#6	#10	#4	#8
1/2	#10	#12	# 8	#10	#6	# 8	#4	#6
3/4	#10	#12	# 6	#10	#4	# 8	#2	#6
1	# 8	#10	# 6	# 8	#4	# 6		#4
1-1/2	# 4	#10	# 0	# 8		# 6		#4
2		# 8		# 6		# 4		#2
3		# 8		# 6		# 4		#2
5		# 6		# 4		# 2		#0

THERMAL PROTECTOR INFORMATION

WARNING

Disconnect power before working on motor driven equipment. Motors with automatic thermal protectors will automatically restart when the protector cools. Do not use motors with automatic thermal protectors in applications where automatic restart will be hazardous to personnel or equipment.

Motors with manual thermal protectors may start unexpectedly after protector trips. If manual protector trips, disconnect motor from power line. After protector cools (five minutes or more) it can be reset and power may be applied to motor.

THERMAL PROTECTOR INFORMATION (Continued)

The nameplate will indicate one of the following:

1. Motor is thermally protected
2. Motor is provided with overheat protective device

For example:

1. Motors without thermal protection have nothing stamped on nameplate about thermal protection.
2. Motors equipped with built-in thermal protection have "THERMALLY PROTECTED" stamped on the nameplate. Thermal protectors open the motor circuit electrically when the motor overheats or is overloaded. The protector cannot be reset until the motor cools. If the protector is automatic, it will reset itself. If the protector is manual, press the red button to reset.
3. Motors that are provided with overheat protective device that does not open the motor circuit directly will indicate "WITH OVERHEAT PROTECTIVE DEVICE". See motor connection diagram for details

CHANGING ROTATION

1. Keep hands and clothing away from rotating parts.
2. Before the motor is coupled to the load, determine proper rotation.
3. Check rotation by jogging or bumping. Apply power to the motor leads for a short period of time, enough to just get motor shaft to rotate a slight amount to observe shaft rotating direction.
4. Three phase - Interchange any two (2) of the three (3) line leads. Single phase - reconnect per the connection diagram on the motor.

REDUCED VOLTAGE STARTING

Motors used on reduced voltage starting, should be carefully selected based upon power supply limitations and driven load requirements. The motors starting torque will be reduced when using reduced voltage starting. The elapsed time on the start step should be kept as short as possible and should not exceed 5 seconds. It is recommended that this time be limited to 2 seconds. Refer to the manufacturer for application assistance.

1. If a motor has become damp in shipment or in storage, measure the insulation resistance of the motor winding.

$$\text{Minimum Insulation Resistance In Megohms} = 1 + \frac{\text{Rated Voltage}}{1000}$$

Do not attempt to run the motor if the insulation resistance is below this value. Have the motor inspected, dried and/or cleaned. Contact a qualified motor repair shop.

2. See that voltage and frequency stamped on motor and control nameplates correspond with that of the power line.
3. Check all connections to the motor and control with the wiring diagram.
4. Be sure rotor turns freely when disconnected from the load. Any foreign matter in the air gap should be removed.
5. If possible, leave the motor disconnected from the load for the initial start. It is desirable to operate the motor without load for about one hour to test for any localized heating in bearings and windings. Check for proper rotation. Check for correct and balanced voltage at the motor terminals. Check no load amps.

ALLOWABLE VOLTAGE AND FREQUENCY RANGE

If voltage and frequency are within the following range, motors will operate, but with somewhat different characteristics than obtained with correct nameplate values.

1. Voltage: Within 10% above or below the value stamped on the nameplate. On three phase systems the voltage should be balanced within 1%. A small voltage unbalance will cause a significant current unbalance.
2. Frequency: Within 5% above or below the value stamped on the nameplate.
3. Voltage and Frequency together: Within 10% (providing frequency above is less than 5%) above or below values stamped on the nameplate.

CLEANLINESS

Keep both the interior and exterior of the motor free from dirt, water, oil and grease. Motors operating in dirty places should be periodically disassembled and thoroughly cleaned.

NOTE

Explosion proof motors should only be disassembled by an authorized service station.

CONDENSATION DRAIN PLUGS

All explosion proof and some totally enclosed motors are equipped with automatic drain plugs, they should be free of oil, grease, paint, grit and dirt so they don't clog up. The drain system is designed for normal floor (feet down) mounting. For other mounting positions, modification of the drain system may be required, consult the manufacturer.

LUBRICATION

NOTE

If lubrication instructions are shown on motor, they will supersede this general instruction. Marathon Electric motors are pregreased with Chevron SRI#2 grease, unless otherwise noted on the nameplate or the motor.

CAUTION

Overgreasing bearings can cause premature bearing and/or motor failure. The amount of grease added should be carefully controlled.

WARNING

Disconnect power before working on motor or driven equipment. Motors with automatic thermal protectors will automatically restart when the protector temperature drops sufficiently. Do not use motors with automatic thermal protectors in applications where automatic restart will be hazardous to personnel or equipment.

Motors are properly lubricated at the time of manufacture. It is not necessary to lubricate at time of installation unless the motor has been in storage for a period of 12 months or longer.

Chevron SRI#2 is a Polyurea Mineral Oil NLGI Grade 2 Grease. Compatible alternatives are: Shell Oil Dolium R, Rykon Premium #2 or Texaco Polystar RB.

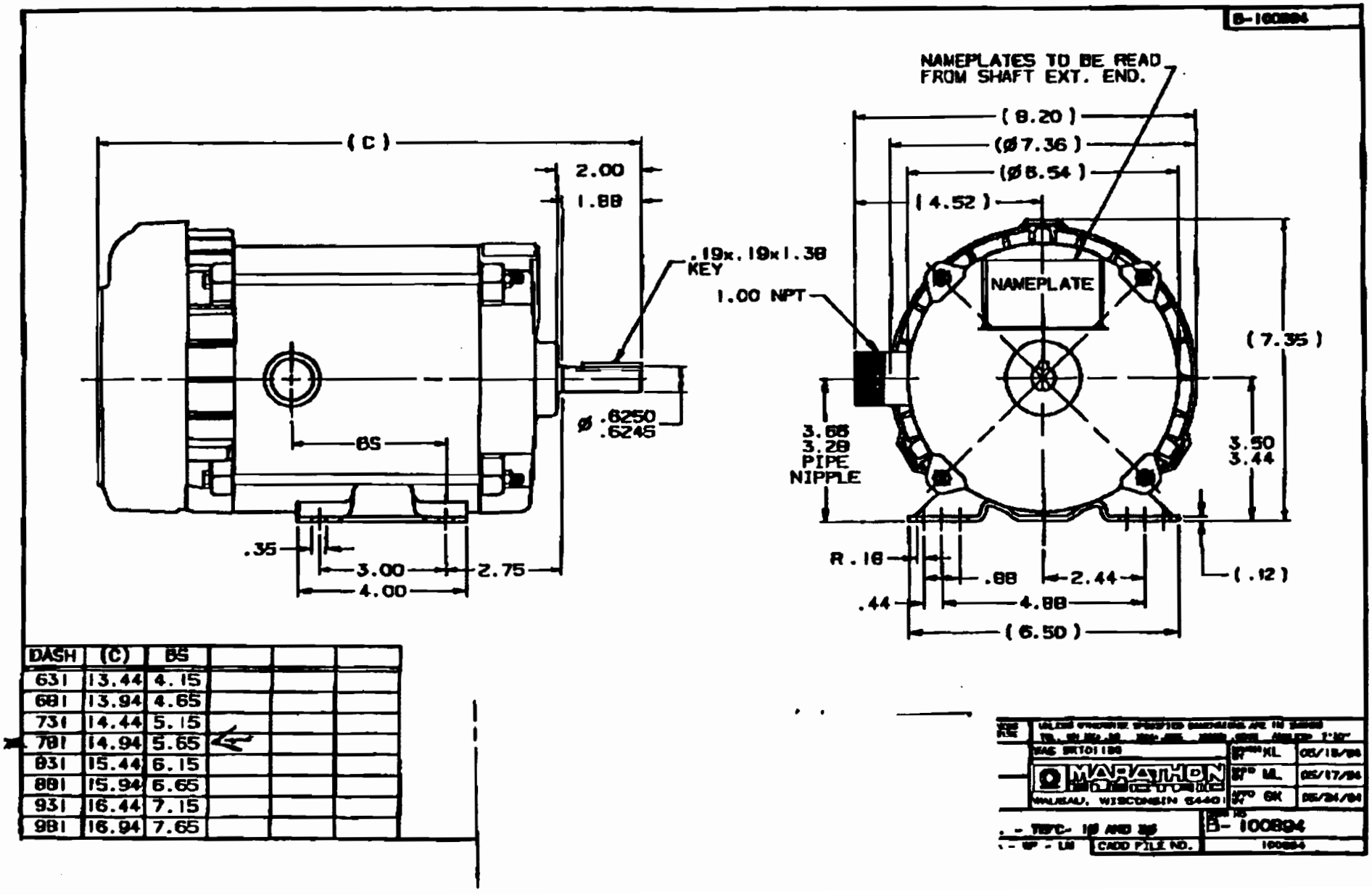

DASH	(C)	BS			
631	13.44	4.15			
681	13.94	4.65			
731	14.44	5.15			
781	14.94	5.65			
831	15.44	6.15			
881	15.94	6.65			
931	16.44	7.15			
981	16.94	7.65			

MARATHON ELECTRIC
WAUSAU, WISCONSIN 54401

B-100894

IMPORTANT: Before using this equipment:

1. Check for shipping damage and report any claim to freight carrier immediately.
2. Remove plastic caps from compressed air connections.
3. Study the following instructions to insure correct installation.

INSTALLATION:

1. The aftercooler should be installed close to the compressor in a well ventilated area as the effectiveness of this aircooled device is dependent on the ambient air temperature. A separator and drain trap should be installed to insure automatic removal of condensed moisture.
2. A flexible connection, located between the compressor and the aftercooler, will reduce vibration transmission and prolong the service life of the cooler. Install the aftercooler and separator in the pipeline paying close attention to the compressed air inlet and outlet labels. ***Do not install in reverse.***
3. Make certain that the separator and connecting pipework are properly supported by pipe stands or hangers (see illustration). Excessive weight on connections will damage the aftercooler.
4. Although the aftercooler is suitable for outdoor installation, this should be avoided whenever possible due to the chance of coil damage resulting from freezing of condensed moisture during periods of winter operation. ***Please note that freezing damage is not covered under warranty.***
5. After the cooler (and separator) have been installed in the compressed air pipeline, connect the correct power source to the motor leads that have been extended to the junction box. A separate fused disconnect switch should be used to provide local protection and isolation. ***Please note specific nameplate electrical requirements.***
6. Check fan rotation on 3 phase units for correct airflow direction (see illustration).

OPERATION:

1. The aftercooler may be switched on and off independently or operated by a relay wired in parallel with the air compressor.
2. After startup observe unit operation to insure: proper fan rotation, outlet compressed air temperature, and adequate ventilation of installation area.

MAINTENANCE:

1. If the separator is equipped with a manual drain valve, this valve should be opened on a regular maintenance schedule a minimum of three (3) times daily.
2. If an automatic float drain or electric timer drain valve is used, this should be checked weekly for proper operation.
3. Oil and carbon from lubricated air compressors can build up inside the aftercooler tubes and reduce its efficiency. These deposits can be removed by taking the cooler out of service and pumping a mild solvent (compatible with copper) through the tubes. Always flush with clean water and drain prior to placing cooler back in service. ***Never use a strong acid- or alkali-based solvent.*** Motivair recommends Sum-Clean™ manufactured by the Summit Oil Co.
4. Inspect aluminum coil fins regularly for accumulations of dust, leaves or other debris which could obstruct the ambient airflow and reduce performance. A compressed air hose can be used to clean the coil by blowing air in a direction that is the reverse of normal fan-driven airflow. Do not use brushes of scrapers as this could result in permanent coil damage.
5. Fan motors are permanently lubricated and require no regular maintenance.

CAUTION: Always disconnect power supply before attempting to remove fan guard, electrical box cover, or any other unit component.

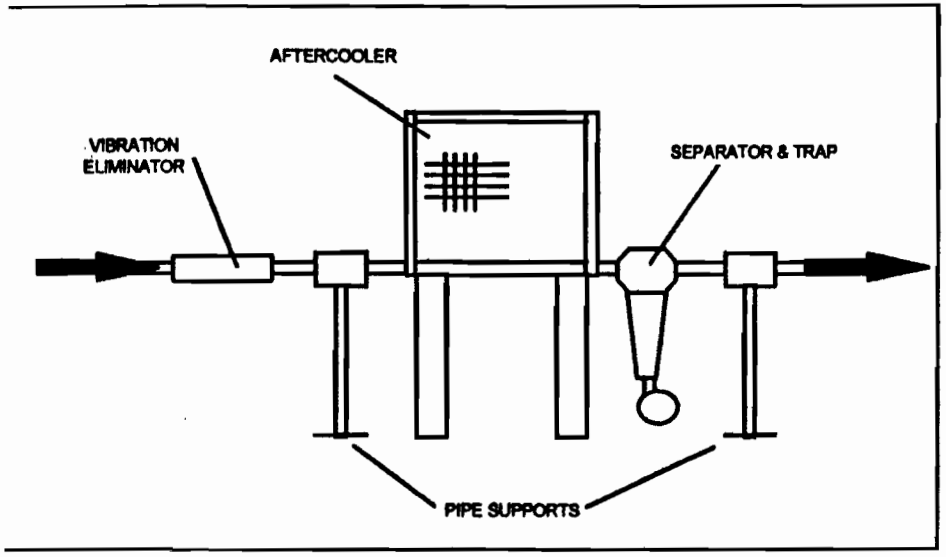

TYPICAL INSTALLATION

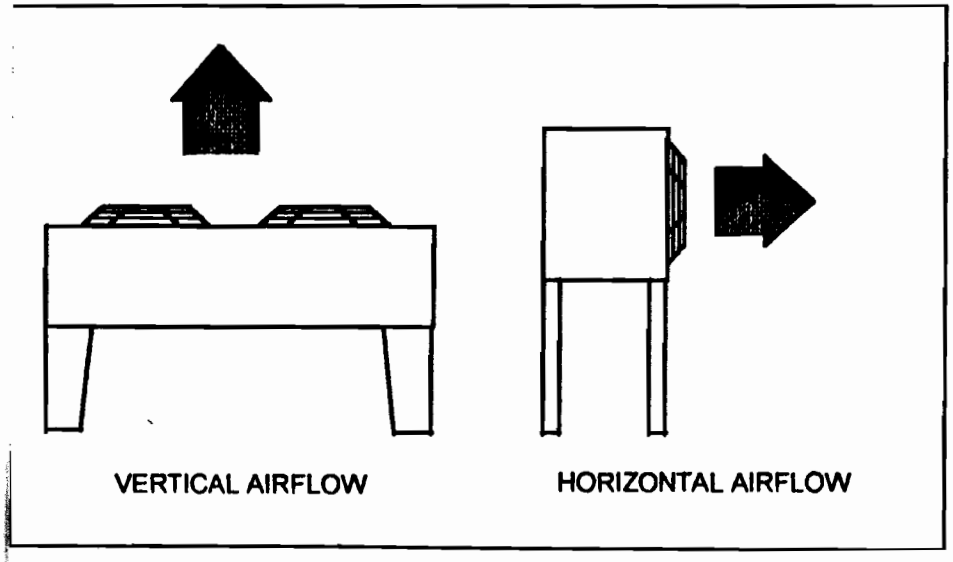

AMBIENT AIRFLOW DIRECTION

motivair

AIRCOOLED AFTERCOOLERS

Installation, Maintenance & Operating Instructions

motivair
25 John Glenn Drive #104, Amherst, NY 14228, Phone: (716) 689-0222, FAX: (716) 689-0073

AC-0275 & AC-0350

AIR FLOW

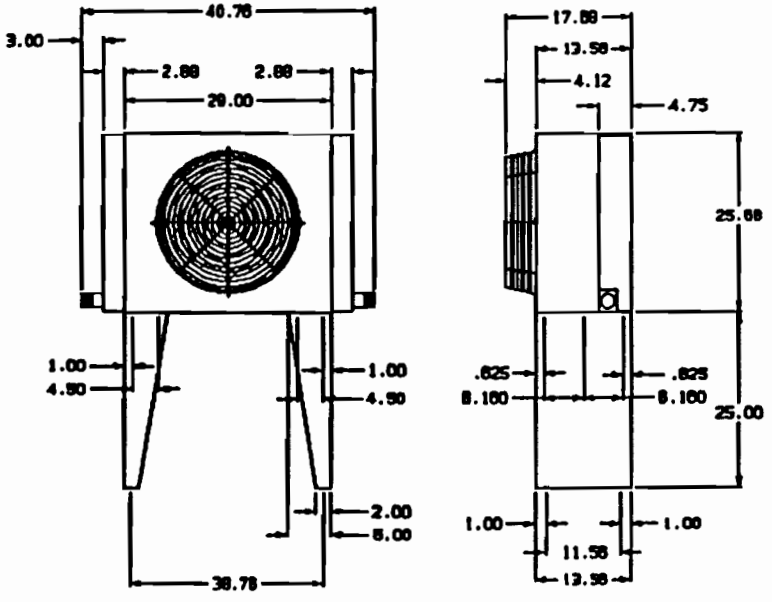

AC-0500,0675,0800 & 1000

AIR FLOW

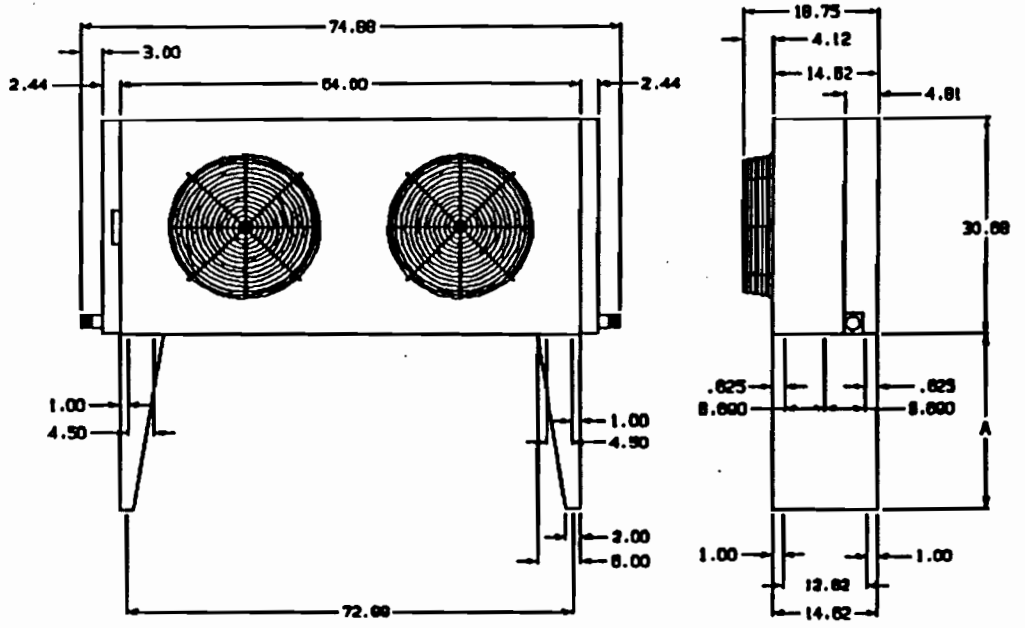

NOTE: FOR PRELIMINARY USE ONLY UNLESS CERTIFIED

CUSTOMER: _____

CUSTOMER ORDER NO.: _____

COOLING AIR											
			MOTOR (S)								
					STANDARD		OPTIONAL				
MODEL NO.	AIR FLOW CFM	FAN DIA. IN.	H.P.	QTY.	VOLT	TOTAL AMPS	VOLT	TOTAL AMPS	A LESS HEIGHT	UNIT NET WEIGHT LB.	UNIT SHIPPING WEIGHT LB.
AC-0275	2400	18	1/6	1	115-60/1	5.6	230-60/1	2.8	25	93	133
AC-0350	2500	18	1/6	1					25	100	140
AC-0500	5300	18	1/6	2		11.2		5.6	25	174	229
AC-0675	4900	18	1/6	2					25	191	246
AC-0800	4900	18	1/6	2					25	222	277
AC-1000	7000	22	1/2	2	230/3	4.0		5.0	30	253	308

THIS DRAWING AND THE INFORMATION IT CONTAINS IS THE PROPERTY OF MOTIVAIR. THIS DRAWING IS NOT TO BE COPIED, REPRODUCED OR DISCLOSED WITHOUT THE WRITTEN APPROVAL OF MOTIVAIR.

MOTIVAIR CORP.
AMHERST, NY 14226

DO NOT SCALE DRAWING. TOLERANCE ON DIMENSION OTHERWISE SPECIFIED FRACTIONAL ± 1/64" | SCALE | BY: | CHK: | DATE: 9-15-94 | DATE:

TITLE	MODEL	DRAWING NUMBER	REV.
GEN. SALES DWG.	0275 - 1000	8513552	

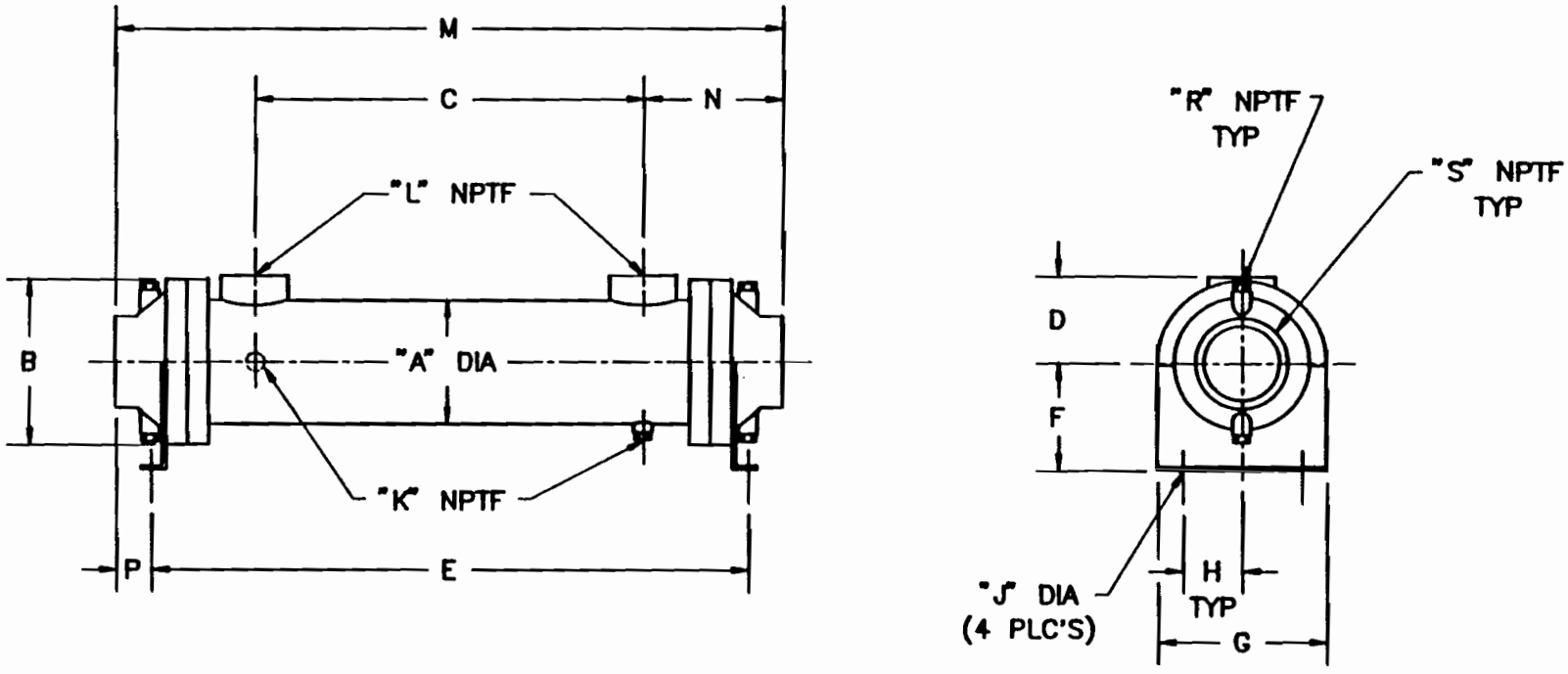

A	B	C	D	E	F	G	H	J	K	L	M	N
6.25	7.75	30.25	4.16	39.13	4.50	6.25	2.50	.50x.75	(3) .38	2.00	42.00	5.87

P	Q	R	S	WEIGHT (lbs)	AREA (ft^2)
1.43	—	4(.50)	3.00		—

ALL DIMENSIONS IN INCHES.

ZINC ANODES OPTIONAL.

NOTE: WE RESERVE THE RIGHT TO MAKE REASONABLE DESIGN CHANGES WITHOUT NOTICE.

REVISION

CSC0636

THIS DRAWING AND THE INFORMATION IT CONTAINS IS THE PROPERTY OF MOTIVAIR CORP. THIS DRAWING IS NOT TO BE COPIED, REPRODUCED OR DISCLOSED WITHOUT THE WRITTEN APPROVAL OF MOTIVAIR CORP.

CAD REFERENCE CODE: OILCLR4

MOTIVAIR CORP.

DO NOT SCALE DRAWING—TOLERANCE ON DIMENSIONS UNLESS OTHERWISE SPECIFIED IS FRACTIONAL ±1/32 DECIMAL ±.010

SCALE: NTS

NAME: G.W.

DATE: 11/29/92

CHK:

DATE:

MODEL

TITLE: 1 PASS OIL COOLER DIMENSIONAL DATA

DRAWING NUMBER

REV.

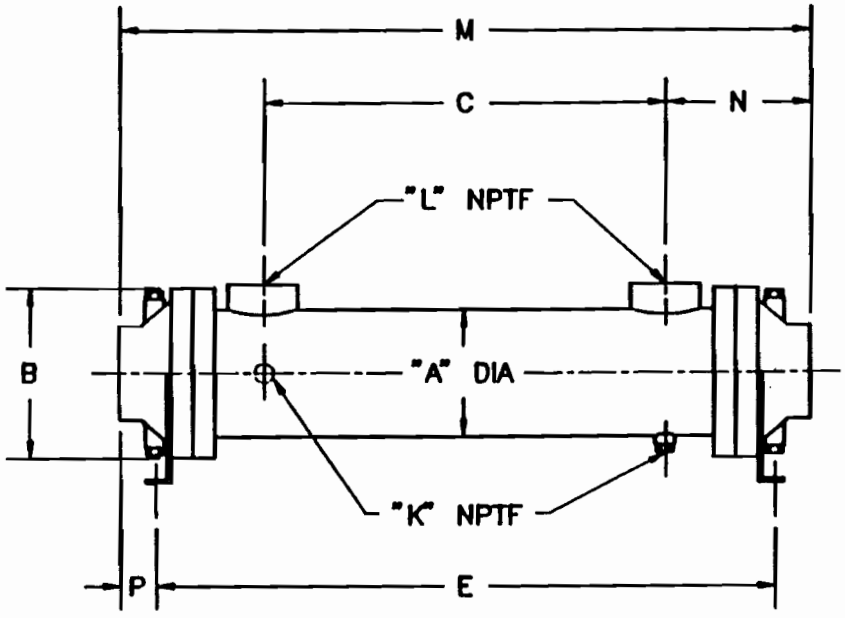

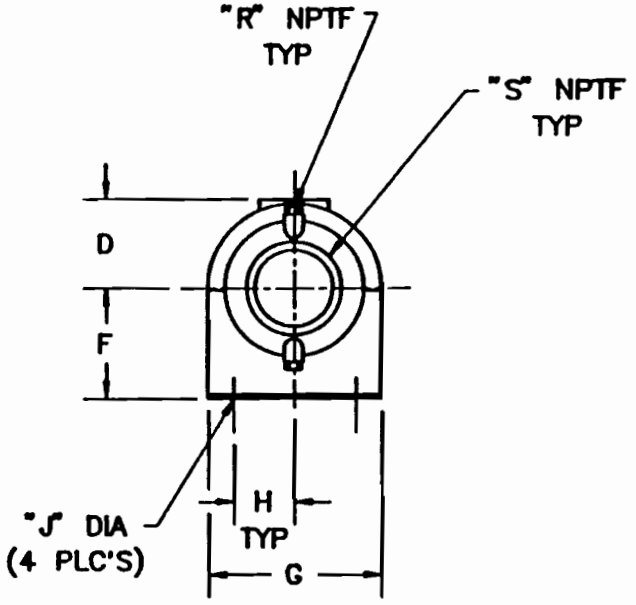

A	B	C	D	E	F	G	H	J	K	L	M	N
6.25	7.75	54.25	4.16	63.13	4.50	6.25	2.50	.50x.75	(3).38	2.00	66.00	5.87

P	Q	R	S	WEIGHT (lbs)	AREA (ft^2)
1.43	—	4(.50)	3.00	160	—

ALL DIMENSIONS IN INCHES.

ZINC ANODES OPTIONAL.

NOTE: WE RESERVE THE RIGHT TO MAKE REASONABLE DESIGN CHANGES WITHOUT NOTICE.

CSC0660

THIS DRAWING AND THE INFORMATION IT CONTAINS IS THE PROPERTY OF MOTIVAIR CORP.. THIS DRAWING IS NOT TO BE COPIED, REPRODUCED OR DISCLOSED WITHOUT THE WRITTEN APPROVAL OF MOTIVAIR CORP..

SIZE OILCLR4

MOTIVAIR CORP.

DO NOT SCALE DRAWING—TOLERANCE ON DIMENSIONS UNLESS OTHERWISE SPECIFIED IS FRACTIONAL ±1/32 DECIMAL ±.010

SCALE: NTS

DRAWN: G.W.

DATE: 11/29/92

CHK:

DATE:

MODEL

TITLE: 1 PASS OIL COOLER DIMENSIONAL DATA

DRAWING NUMBER

REV.

IMPORTANT (1) Read carefully before attempting to assemble, install, operate or maintain the product described. Observe all safety information.

(2) Before using this equipment, check for shipping damage and report any claim to carrier immediately.

INSTALLATION

(1) Depressurize system before opening to install.
(2) Install unit in a vertical position. Allow adequate clearance below unit for servicing (bowl length)
(3) Separator inlet and outlet is the same for all NPT models. Fabricated separator can be varied depending upon application design. See certified drawing supplied with equipment.
(4) Install NPT models with air flowing in direction of arrow. Fabricated units are marked in/out,
(5) MOTIVAIR separators remove condensed liquid from the air system through centrifugal action. Liquid collected in the sump must be removed from system utilizing the SCM20 external float drain or the EDM20 electric drain. Both can be fitted to bottom discharge port. Be sure when disposing of condensate discharge liquid that you comply with local, state and federal EPA codes.

MAINTENANCE

(1) Depressurize the unit system before removing band.
(2) Inspect seals and replace cracked, damaged or deteriorated seals with original manufacturers approved seals.
(3) If units are equipped with automatic drain, follow I & M instructions for the type installed on your system.
(4) Before placing unit back in service, be sure NPT separator valve is in the locked position.
(5) No periodic maintenance is required for fabricated steel separator.

MODEL	A	B	C	IN/OUT	LBS.
003	3.5	1.65	7.6	3/4" NPT	4
0010	3.5	1.65	7.6	1" NPT	4
0015	4.7	2.3	9.9	1 1/2" NPT	6
0020	6.3	2.6	15.9	2" NPT	12
0025	7.9	3.0	19.4	2 1/2" NPT	15

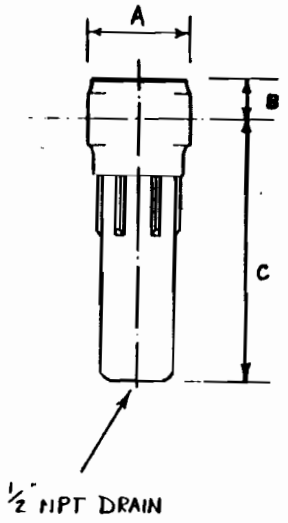

SAME IN/OUT CONNECTIONS

	MODEL	A	B	C	D	E-F	G	Lbs
TS	0038	12 5/8	17	7	8 5/8	3	1/2	85
TS	0310	14 3/4	20	8	10 3/4	3	1/2	120
FS	0036	14	16	6	6 5/8	3	1/2	72
FS	0048	16	18	6	8 5/8	4	1/2	120
FS	0410	18	21	7	10 3/4	4	1/2	150
FS	0612	22	25	11	12 3/4	6	1/2	200
FS	0816	28	33	13	16	8	1	340
FS	1016	30	40	14	16	10	1	450
FS	1220	32	44	16	20	12	1	590
FS	1424	36	52	18	24	14	1	780

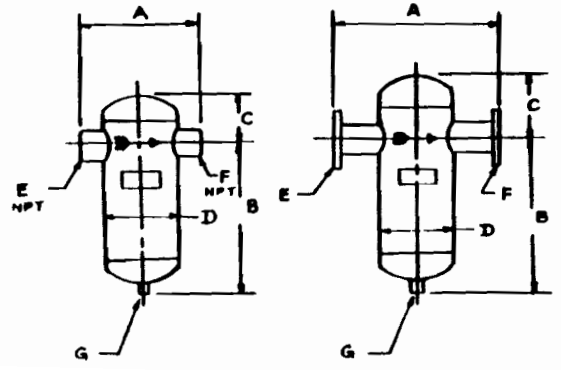

[illegible]	[illegible]	[illegible]	[illegible]	[illegible]	[illegible]	[illegible]	[illegible]	[illegible]	[illegible]	[illegible]	[illegible]
TS	0310	14	3/4	20	8	10	3/4	3	2	1/2	1/2	120
FS	0036	14		16	6	6	5/8	3	2	1/2	1/2	72
FS	0048	16		18	6	8	5/8	4	2	1/2	1/2	120
FS	0410	18		21	7	10	3/4	4	3		1/2	150
FS	0612	22		25	11	12	3/4	6	4		1/2	200
FS	0816	28		33	13	16		8	6		1	340
FS	1016	30		40	14	16		10	6		1	450
FS	1220	32		44	16	20		12	8		1	590
FS	1424	36		52	18	24		14	8		1	780

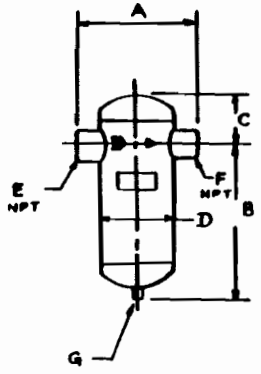

MODELS 0038 0310 ONLY

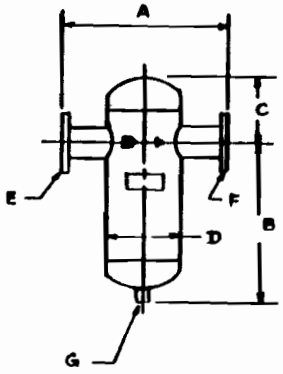

MODELS 0036 THRU 1424

MOTIVAIR

CENTRIFUGAL SEPARATORS

INSTALLATION MAINTENANCE

AND

OPERATING INSTRUCTIONS

MOTIVAIR CORPORATION • 4552 BAILEY AVENUE • AMHERST, NEW YORK 14226
TEL 716-836-7656 FAX 716-836-9625

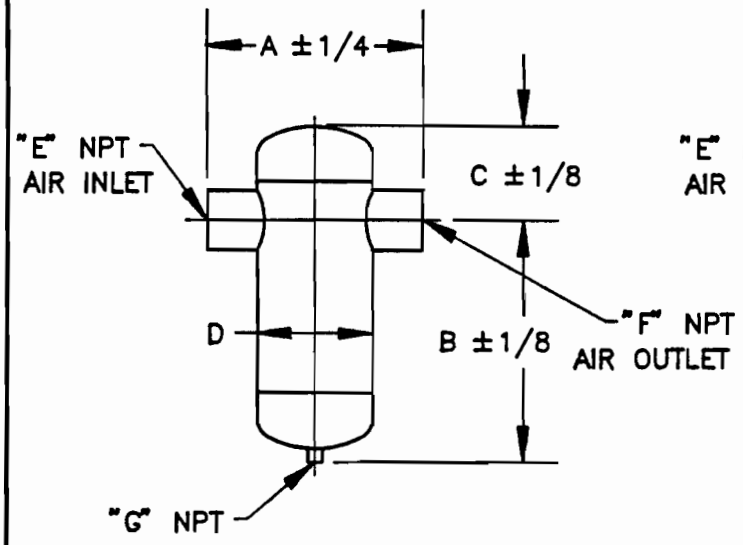

MODELS 0038–0310

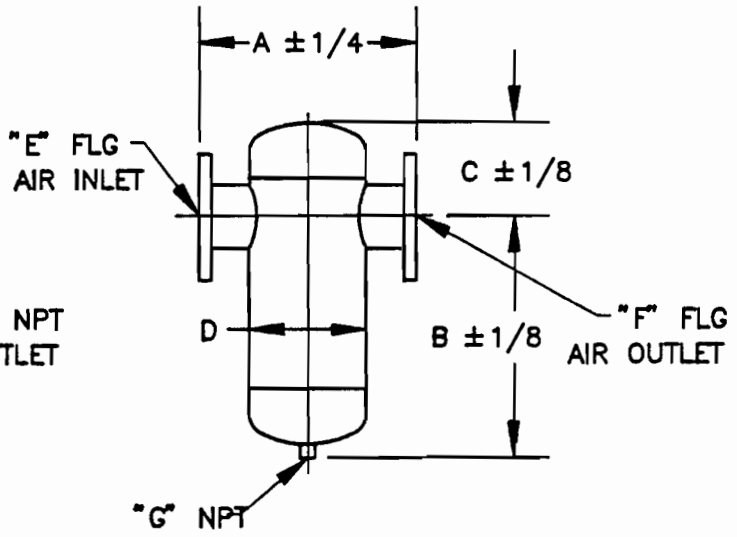

MODELS 0036–1424

SEPARATORS ARE "ASME" CODE CONSTRUCTED AND CAN BE STAMPED IF REQUIRED.

MATERIAL IS "CARBON STEEL", OTHER MATERIALS UPON REQUEST.

DESIGN PRESSURE IS 200 PSIG @ 400°F, MDMT IS −20°F @ 200 PSIG.

MODEL	"A"	"B"	"C"	"D"	"E"	"F"	"G"	WEIGHT (LBS)
TS 0038	12 5/8"	17"	7"	8 5/8"	3"	3"	1/2"	85
→ TS 0310	14 3/4"	20"	8"	10 3/4"	3"	3"	1/2"	120
FS 0036	14"	16"	6"	6 5/8"	3"–150	3"–150	1/2"	72
FS 0048	16"	18"	6"	8 5/8"	4"–150	4"–150	1/2"	120
FS 0058	16"	18"	6"	8 5/8"	5"–150	5"–150	1/2"	120
FS 0410	18"	21"	7"	10 3/4"	4"–150	4"–150	1/2"	150
FS 0510	18"	21"	7"	10 3/4"	5"–150	5"–150	1/2"	150
FS 0612	22"	25"	11"	12 3/4"	6"–150	6"–150	1/2"	200
FS 0816	28"	33"	13"	16"	8"–150	8"–150	1"	340
FS 1016	30"	40"	14"	16"	10"–150	10"–150	1"	450
FS 1220	32"	44"	16"	20"	12"–150	12"–150	1"	590
FS 1424	36"	52"	18"	24"	14"–150	14"–150	1"	780
FS 1830	44 1/2"	64 1/4"	23"	30"	18"–150	18"–150	1"	2000
FS 2036	50"	70 1/4"	26 1/2"	36"	20"–150	20"–150	1"	3100
FS 2442	57"	89 3/4"	30 3/4"	42"	24"–150	24"–150	1"	4200

NOTE: FOR PELIMINARY USE ONLY UNLESS CERTIFIED

CUSTOMER _____ CUSTOMER ORDER No. _____

BRANCH OFFICE No. _____ OUR SHOP ORDER _____

CERTIFIED BY _____ DATE _____

REVISION

A ADD MOD FS0058 & FS0510

B ADD MOD FS1830 THRU FS2442

THIS DRAWING AND THE INFORMATION IT CONTAINS IS THE PROPERTY OF MOTIVAIR CORP. THIS DRAWING IS NOT TO BE COPIED, REPRODUCED OR DISCLOSED WITHOUT THE WRITTEN APPROVAL OF MOTIVAIR CORP.

CAD REFERENCE CODE MAS–2001

MOTIVAIR CORP.

AMHERST, N.Y. 14226

MODEL	TITLE	DRAWING NUMBER	REV.
TS038–FS2442	DIMENSIONAL DATA SEPARATORS	MAS–2001	B

APPENDIX A-3

MANUFACTURER'S OPERATIONS AND MAINTENANCE MANUAL FOR OIL CIRCULATION PUMPS

DISASSEMBLY

1. Disconnect power source to motor.
2. Remove volute bolts. (H) Cover may be left in plumbing.
3. Remove pump assembly to repair area, with motor if possible. Observe position of all parts prior to further disassembly. If necessary, loosen set screws on pump shaft, remove 4 bolts (J) from motor and remove pump end.
4. Remove the impeller locknut. An Allen wrench inserted into one setscrew may be used to keep shaft from turning. Remove impeller (C) by turning counter-clockwise. A heavy screw driver or file wedged between blades will serve as a tool.
5. Remove seal and seat (D) from shaft (F). Two screw drivers wedged in seal at 180 degrees apart will serve as tools. Do not attempt to salvage. Pry ceramic seat with Viton cup from seat cavity. Do not attempt to salvage seat.
   (Type 9 seal - with steel scale, measure distance from shaft shoulder (where shaft threads begin) to seal and record this information. Loosen socket head screws on seal, then remove seal and seat from shaft. It may be necessary to grind Allen wrench, if not included.)
6. Thoroughly clean shaft shaft and seal (seat) cavity with appropriate solvents, etc.

REASSEMBLY

1. If shaft was removed, place pump onto motor shaft. Tighten one (1) setscrew slightly.
2. Replace bracket (E).
3. Place small amount of liquid dish soap on cup or "O" ring of ceramic seat, place in seat cavity with ceramic toward shaft end. (Type 9 seat, pre Sept. 1984, with "L" shaped pinned seat - make sure small groove is aligned with pin of locking device.) Do not scratch seat with fingers or tools. Tap gently in place with wooden dowel or plastic rod (1-1/8" dia).
4. Lubricate shaft with light oil and press seal with carbon toward seat onto shaft evenly. If seal is EPR do not use oil - use soapy water. Be careful not to pull Viton bellows from assembly. Getting seal started over shaft end is simplified if a tapered device (5/8" max. O.D.) is placed over threads. Type 9 seal - Do not remove metal clips. Place seal on shaft, sliding gently past shoulder. Remove clips in holes of seal. Do not tighten setscrews of seal at this time.
5. Type 21 seal - Replace impeller onto shaft making sure spring holder does not slip down over step in shaft and impeller hub. tighten securely and reinstall locking nut and washer. Type 9 Teflon seal - Locate seal at exact distance measured in Disassembly Step #5 above. Setscrew marks on old shaft may be used also as a guide. Tighten seal setscrews at this time.
   (Note: If dimension is lost. do not tighten setscrews. Install impeller but do not tighten securely. Loosen setscrews on shaft to motor and hold volute, without gasket, up to bracket flange. If volute was left in piping, take pump to volute. Move shaft and impeller forward until impeller strikes volute. Tighten pump shaft setscrews. Remove from volute and slide seal on shaft. Set proper tension of seal by compressing until distance from ceramic face to back of seal is 3/4". Pr see Type 9 seal drawings and instructions on back page. Tighten seal setscrews. Install impeller (C) and tighten. Install locknut. (Note: If volute is available you can also move pump shaft forward as far as possible and slide seal up to the ceramic seal - do not tighten setscrews.) Install impeller (C) and do not tighten. Hold volute (E) and gasket (B) up to bracket flange (E) and press toward motor until flanges meet. Remove impeller (C) and tighten seal setscrews. Reinstall impeller (C) and tighten. Install volute (E) and gasket (B) and tighten flange bolts. Impeller is now against volute. Set by prying back on pump shaft approximately .010" and tighten shaft setscrews securely.
6. Install pump volute, new gasket preferred.
7. Presetting of pump shaft is accomplished by moving shaft toward motor approximately .010" to .015". A screw driver against shaft shoulder can be used. Tighten one (1) setscrew slightly to hold shaft in position. Turn shaft by hand to determine if impeller clears volute. If impeller strikes, loosen setscrew and move back further, repeat check. On Type 9 seals, if above (item 5) has been followed, Impeller does not need to be set.
8. Thoroughly prime pump making sure all air is removed.
9. Reconnect wiring and start momentarily to observe rotation. If correct rotation pump may then be put in service. Reconnect motor, start and give pump some time to purge all air. Observe any guages, meters, etc. to see if pump performs as before. If low flow, excessive clearance exists between volute and impeller or rotation is wrong or pump is not primed properly. If clearance is too great, unit must be removed from volute and seal relocated toward motor. That is, away from impeller.

INSTRUCTIONS

TYPE LT25

CLOSE COUPLED
CENTRIFUGAL
MOTOR
PUMPS

Was TYPE S25 (STAINLESS STEEL)
Now LT25 SS

Was TYPE B25 (BRONZE)
Now LT25.AB

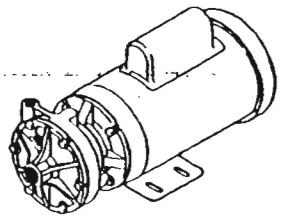

	Stainless Steel S25-33 & S25-12		Bronze B25-33 & B25-12
A. Cover	0313		0312
B. Gasket	0318		0317
C. Impeller	0315		0314
Impeller Locknut (not shown)		0897	
D. Seal with Seat			
Type 21, Viton		0553	
Type 9, Teflon		1150	
E. Volute Bracket	0311		0310
F. Shaft with Setscrews		0316-1	
H. Volute Bolts (6 req.)		0376	
J. Motor Bolts (4 req.)		0591	
Repair Kits:			
Includes: Gasket, Shaft & Instructions	0726		0725

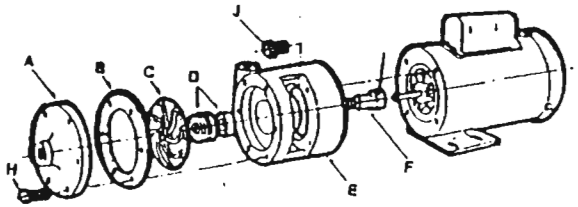

Price Pump Company
#1 Pump Way • P.O. Box Q • Sonoma, CA 95476-0329 • (707) 938-8441 • Fax (707) 938-0764

PRICE PUMP CO.
GENERAL INSTRUCTIONS

Price Pump Company produces several models of straight centrifugal pumps and self-priming centrifugal pumps. They are made of several different materials as well. In general, the instructions are the same for all.

INSTALLATION

Close Coupled - Motor Pumps
These pumps require no special care in mounting, although it is suggested that they be firmly bolted to whatever surface is used. Adequate air movement over motor will help prevent overloads.

Base Mounted Pumps (Pedestal Pumps)
These pumps should be mounted on a rigid steel base that will not warp or flex. Each pump must be mounted in such a way that the pump shaft centerline is on center with the driver shaft centerline. Pads and/or shims will be required on either pump, driver or both. The two shafts should not butt and distance between them will depend on coupling used. Do use a flexible coupling and align it properly using straight edges and/or indicators. Misalignment will cause bearing failure and void warranty. Pulley driven pumps must have pulleys in line and good belt tightness practices followed.

Self Priming Pumps
Self priming centrifugal pumps must receive an initial prime. Always use a good quality pipe sealant such as Loctite PST teflon sealer. Never use teflon tape on suction lines. Tape will seal under pressure but is not reliable under vacuum. A self priming centrifugal pump self primes by creating a vacuum and then evacuating the air from the suction line. Therefore, the suction line must be perfectly sealed against vacuum leaks.

Piping
All piping should be supported independently of the pump. Do not place a strain on the volute.

1. Suction Piping - A piece of straight pipe a minimum of 5 times the pump inlet diameter and preferably 10 times the diameter should always be used between the pump and the first el, tee, or valve. Always place the end of the suction pipe at least three feet below the surface of the liquid to prevent air from being drawn into the pump, as air entrainment will cause the pump to lose prime. Horizontal lines of suction pipe should slope downward from the pump to avoid air pockets. Provide a strainer if possible. Suction lines must be at least the same size as inlet and the next size larger, whenever possible. If a larger suction pipe is used with a self priming pump, re-priming times will be longer.
2. Discharge Piping - It is advisable to install a valve (Gate, Globe or Ball) and a check valve in the discharge line and close to the pump. The valve can be used to control the pump flow (closing valve increases friction loss, thus increasing head and reducing flow). It also allows the line to be shut if repairs are being made. A check valve will prevent back flow when pump is shut down.
3. If pump is installed above the liquid, a check or foot valve must be installed in the suction line. If the pump is not a self-priming unit, at the furthest possible point from the pump. Use a suction line no smaller than the suction size of the pump. If the line has several els, etc., we suggest using the next larger size.
4. Suction Lift - Static lift (measured from liquid surface to suction port) plus friction loss must not exceed that recommended. Vapor pressure must also be considered. Contact factory for NPSH(R) (net positive suction head required). Self-Priming pumps must evacuate air from suction line. It may be necessary to vent off air in discharge line if there is a discharge check valve. An automatic air release valve may be used. Or use a bypass line installed between pump discharge and discharge check valve and returning to source of liquid. A manual valve should be installed in this line.

OPERATING

Centrifugal pumps must receive an initial prime in ALL cases.

1. Priming - Do not start pump before priming, except to check for proper rotation. Running in reverse may cause impeller to spin off. Merely jog switch to check rotation. Do not run pump with liquid in reverse, as this will increase possibility of impeller spinning off. Completely fill the pump volute and suction line. Remove air from volute by removing top pipe plug of volute while filling. After filling, check by turning pump shaft a few times. Add more water if required. It is suggested that during initial start-up that the discharge valve be closed and gradually opened as motor develops full r.p.m. This allows a gradual build up of power requirement. If pump does not build up pressure as motor develops speed, shut down and reprime. Do not attempt to prime pump or add liquid while pump is in operation.
2. Starting a new or repaired pump - Follow instruction above after first checking for proper rotation. Also make sure impeller turns freely within the volute. Sometimes a new seal will leak slightly, but this should disappear within a few hours.

MAINTENANCE

1. Motor Pumps - If sleeve-ball combination motors are supplied, the sleeve should be relubricated with the proper oil every six to twelve months as indicated on the motor.
2. Servicing & Repair - For specific seal service instructions and parts drawings and repair parts lists please read the other side of this pamphlet.

TROUBLE SHOOTING

1. No liquid delivered:
   a. Pump not primed.
   b. Speed too low. Check voltage and frequency of driver, pulley selection, etc.
   c. Incorrect rotation. Must rotate in direction of arrow cast on volute.
   d. Air leak in suction.
   e. Discharge head too high for pump. Use larger lines and reduce els, etc. or a different pump model.
   f. Suction lift too high. Consider vapor pressure and temperature. Increase size of suction pipe (except self priming pumps). Relocate pump.

2. Not enough liquid delivered:
   a. Incorrect rotation. Must rotate in direction of arrow cast on volute.
   b. Air leaks in suction.
   c. Speed too low. Check voltage etc. (see 1 b above)
   d. Discharge head too high or higher than calculated.
   e. Inadequate suction head to hot liquid.
   f. Impeller or volute worn.
   g. Excessive clearance between volute and impeller of semi-open impeller pumps. Reset by loosening setscrews of bearing adapter (Pedestal Pumps) or pump shaft (Motor Pumps) and move impeller toward volute. Recommend clearance is .010"-.015".
   h. Suction not submerged enough, causing air to enter suction line.

3. Not enough pressure:
   a. Speed too low.
   b. Incorrect rotation. Must rotate in direction of arrow cast on volute.
   c. Air or gas in liquid or leaking suction line.
   d. Damaged impeller.

4. Pump gradually loses suction:
   a. Leaky suction line.
   b. Too high suction lift.
   c. Open end of suction line.
   d. Air or gas in liquid.

5. Motor runs hot. (Note: Most motors will feel hot even when not overloaded.)
   a. Low voltage or low frequency.
   b. Discharge head too low or lower than calculated causing pump to deliver a higher volume. Throttle discharge with valve.
   c. Heavy liquid or viscous liquid.
   d. Seal binding.

6. Seal leaks:
   a. Improper assembly.
   b. Worn or cracked seal faces.
   c. Abrasive material being pumped building up around seal causing faces to separate.
   d. Running dry.
   e. Liquid not compatible with elastomers or other parts of seal.

WARRANTY AND CONDITIONS

Price Pump Mfg. Co. warrants pumps and parts and other devices of its manufacture and bearing its nameplate, when not misused or neglected, to be free from defects in workmanship or materials. The Company's obligation under this warranty is limited to repairing or replacing at its factory, any such product or part thereof which shall within one year after delivery to the original purchaser be returned to the factory, transportation charges prepaid and which on examination reveals to have been thus defective. The Company assumes no liability for consequential or contingent damages of any kind arising out of the failure of its product. A defect in the meaning of this warranty, in any part of said equipment shall not, when such part is capable of being repaired or replaced, operate to condemn such equipment. THIS WARRANTY IS EXPRESSLY IN LIEU OF OTHER WARRANTIES, OBLIGATIONS OR LIABILITIES EXPRESSED OR IMPLIED BY THE COMPANY OR ITS REPRESENTATIVES. ALL STATUTORY OR IMPLIED WARRANTIES, INCLUDING ANY WARRANTIES OF MERCHANTABILITY OF FITNESS, OTHER THAN TITLE, ARE HEREBY EXPRESSLY NEGATED AND EXCLUDED.

WARNING: Welding, cutting or grinding on any casting may generate toxic dust and fumes.

PRICE PUMP CO.
19672 4th Street East
P.O. Box O
Sonoma, California 95476
Tel. (707) 938-8441

IMPORTANT (1) Before using this equipment, check for shipping damage and report any claim to carrier immediately.

(2) Remove plastic caps or closure plates from air and water connections before installation.

(3) Study the following instructions to insure correct installation.

INSTALLATION

(1) The aftercooler should be located as close as possible to the outlet of the compressor.

(2) Models up to and including EC044 have female NPT connections. Models WC033 and larger have flanged air connections.

(3) Compressed air and cooling water must always flow in opposite directions through the cooler. Install cooler with water inlet on the bottom and water outlet on the top (See Fig. 1).

(4) Install aftercooler and separator with compressed air inlet and outlet as shown on the labels.

(5) Take care to properly support the weight of the pipework, aftercooler and separator.

(6) Install a shut-off valve in the water inlet line and a flow regulating valve on the outlet line.

(7) A funnel or sight glass on the outlet line is recommended for observing water flow through the cooler.

OPERATION

(1) Open water valves and insure water is flowing through cooler before starting compressor. Never allow aftercooler to operate without water or damage could result.

(2) Start compressor and adjust regulating valve to desired aftercooler performance.

(3) Always keep water outlet temperature below 105°F to minimize scale deposits inside cooler.

MAINTENANCE

(1) If the separator is fitted with a manual drain valve, this should be opened on a regular maintenance schedule at least 3 times daily.

(2) If an automatic float drain is fitted, this should be checked for normal operation weekly.

(3) Oil and carbon from lubricated compressors can build up inside the cooler tubes. This can be removed during plant shut-down by removing the cooler and pumping a mild solvent, compatible with copper, through the tubes, flush with clean water and drain before re-using the cooler. Never use a solvent with a strong acid or alkali base. MOTIVAIR recommends Sum-Clean™ by the Summit Oil Co.

(4) Scale deposits may build up on the outside of the tubes and this is best removed by pumping a mild solvent through the water connections without removing the cooler from the pipeline system. On standard coolers the solvent must be compatible with copper to prevent damage to the cooler. Do not use a solvent with a strong acid or alkali base. MOTIVAIR recommends Lime-Sol™ water based solvent produced by Summit Oil Co.

(FIG. 1)

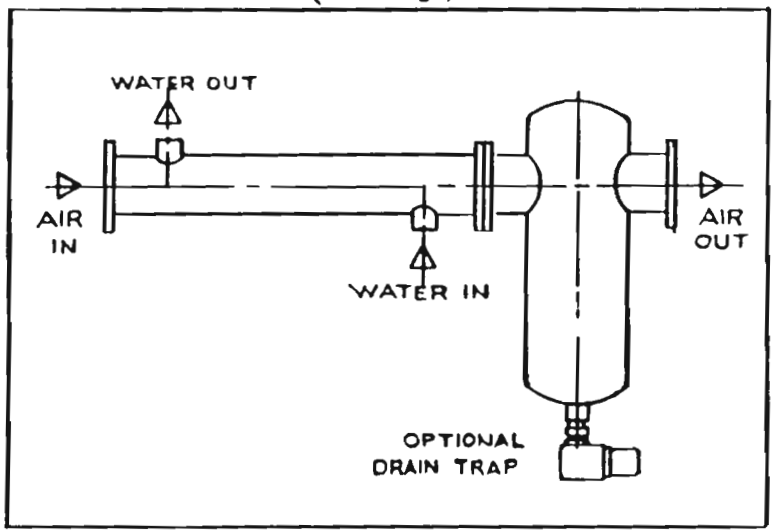

MOTIVAIR WATER-COOLED AFTERCOOLERS

INSTALLATION MAINTENANCE

AND

OPERATING INSTRUCTIONS

MOTIVAIR CORPORATION • 4552 BAILEY AVENUE • AMHERST, NEW YORK 14226
TEL 716-836-7656 FAX 716-836-9625

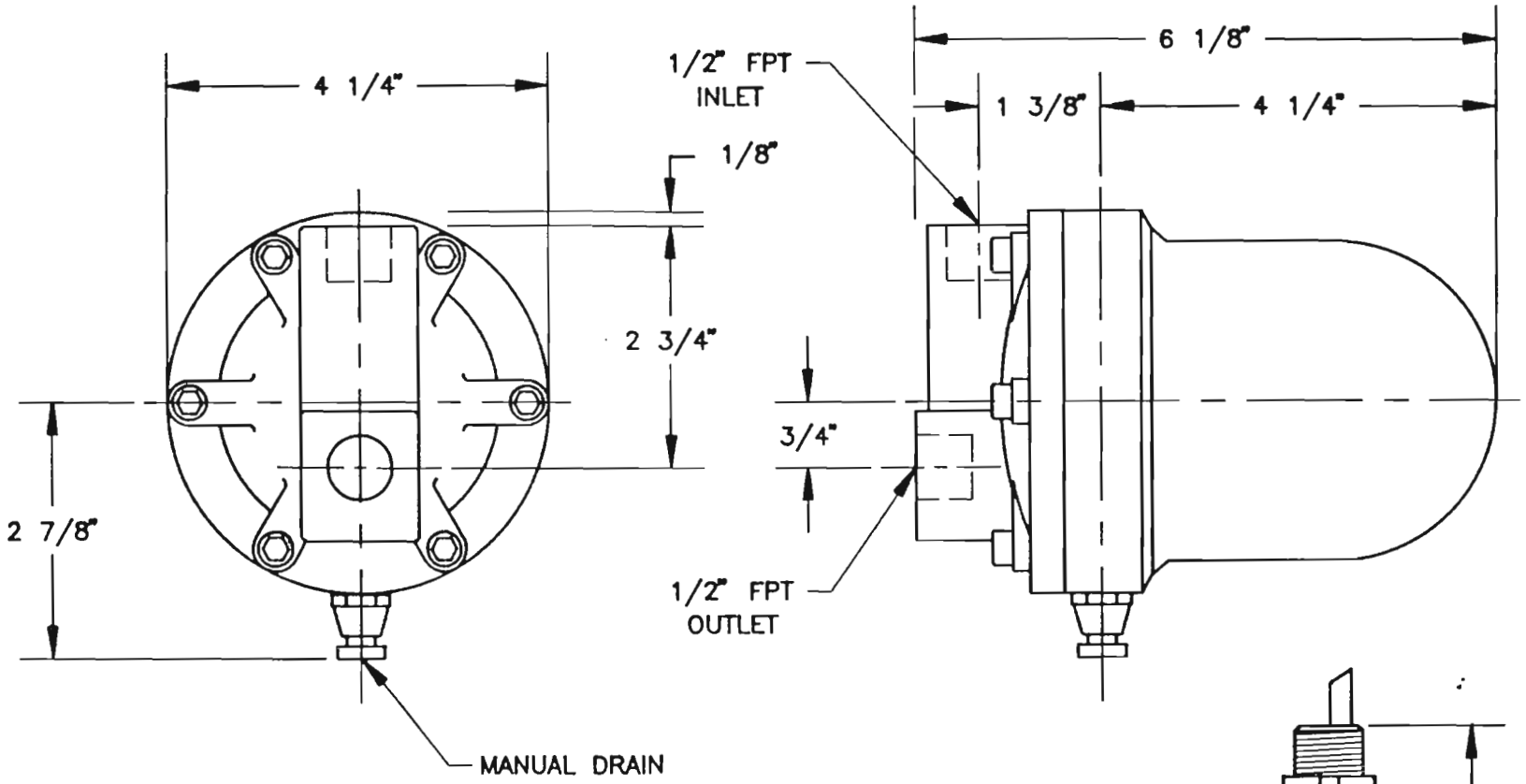

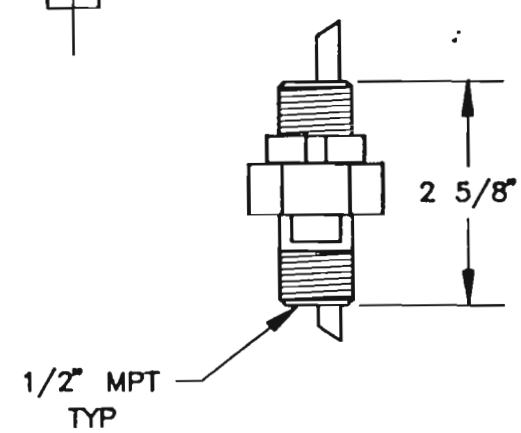

VENT ADAPTER

NOTES:

1. MATERIAL OF CONSTRUCTION IS ALUMINUM.
2. MAXIMUM ALLOWABLE WORKING PRESSURE IS 300 PSIG @ 150°F.
3. SHIPPING WEIGHT IS 3lbs.

REVISION						
A	THIS DRAWING AND THE INFORMATION IT CONTAINS IS THE PROPERTY OF MOTIVAIR CORP. THIS DRAWING IS NOT TO BE COPIED, REPRODUCED OR DISCLOSED WITHOUT THE WRITTEN APPROVAL OF MOTIVAIR CORP.	GAD REFERENCE CODE MOTIV11	MOTIVAIR CORP. AMHERST, N.Y. 14228			
			DO NOT SCALE DRAWING-TOLERANCE ON DIMENSIONS UNLESS OTHERWISE SPECIFIED IS FRACTIONAL ±1/32 DECIMAL ±.010	SCALE: 1/2" = 1"	NAME: D.C. DATE: 2-2-93	CHK: DATE:
			MODEL: SCM 20	TITLE: DRAIN TRAP	DRAWING NUMBER: MAT-2001	REV. A

AUTOMATIC DRAIN TRAPS

INSTALLATION MAINTENANCE

AND

OPERATING INSTRUCTIONS

motivair™

Motivair Corporation
25 John Glenn Dr., #104
Amherst, New York 14228

Tel. 716 689-0222
Fax 716 689-0073

IMPORTANT (1) Before using this equipment, check for shipping damage and report any claim to carrier immediately.

(2) Study the following instructions to insure correct installation.

INSTALLATION

(1) The traps must always be installed underneath or at a lower level than the vessel to be drained. If the trap is installed higher than the bottom of vessel, there will always be a corresponding level of water in the vessel. See Figures 1 & 2.

(2) Motivair traps are supplied complete with vent adapters to prevent air locks within the traps. This adapter eliminates the need for external venting via a separate tube. For effective operation, the vent adapter must be installed directly between the trap and the vessel with no additional fittings.

(3) Check the system pressure does not exceed the maximum pressure rating for the drain trap. Model SCM 20 is rated for 300PSIG.

MAINTENANCE

(1) Since new installations may experience more debris in the air line, it is recommended that the trap is cleaned thoroughly after approximately one week of operation. The only routine maintenance required is to periodically open the manual drain at the bottom of the trap to discharge any accumulated debris. If the quantity of liquid discharged is more than 1/2 pint, the trap should be disassembled and cleaned.

(FIG. 1)

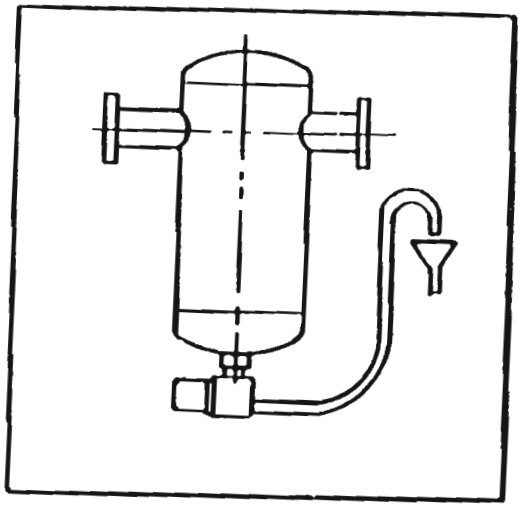

(FIG. 2)

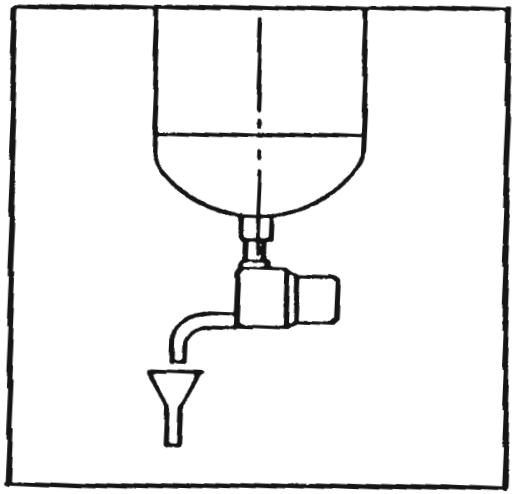

APPENDIX A-4

MANUFACTURER'S EQUIPMENT DATA SHEETS FOR VAPOR-PHASE AND AQUEOUS-PHASE GACS

CARBTROL®

TYPE CSV
AIR PURIFICATION CARBON

DESCRIPTION

CARBTROL CSV Air Purification Carbon is designed for use in a wide variety of vapor phase treatment applications. It combines high surface area and fine pore structure in a product of exceptional hardness. CSV provides superior performance to most standard grade activated carbons. It is particularly effective for the removal of VOC compounds from air discharges.

SPECIFICATIONS

SIZE (US Sieve):	4 x 8
IODINE (No.):	1100
CCL_4 (No.):	65
APPARENT DENSITY (g/cc):	.45 to .50
MOISTURE (percent):	2
HARDNESS (No.):	90

APPLICATIONS

- VOC adsorption
- Soil vapor extraction
- Evaporative emissions
- Air stripper exhausts
- HVAC adsorption filters
- Tank vents
- Clean room air purification

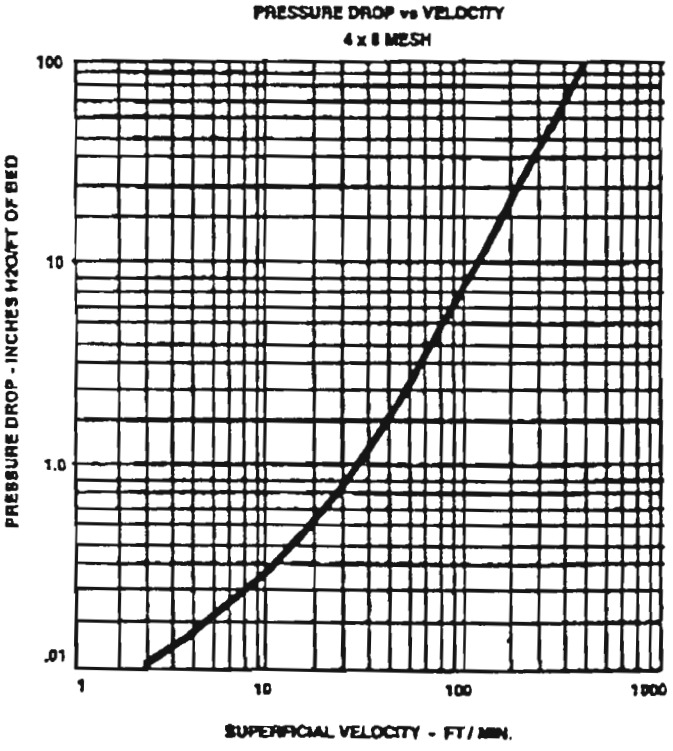

SAFETY

Certain chemical compounds in the presence of activated carbon may oxidize, decompose or polymerize. This could result in temperature increases sufficient to cause ignition of the activated carbon or adsorbed material. If a compounds reaction with activated carbon is unknown, appropriate tests should be considered.

CARBTROL® CORPORATION
51 Riverside Avenue, Westport, CT 06880 • 1-800-242-1150 • (203) 226-5642

© Copyright 1991 Carbtrol Corporation - 12/7/95 AT-9511/#1

CARBTROL®

AIR PURIFICATION ADSORBERS
1,000 LB. ACTIVATED CARBON G-4
1,800 LB. ACTIVATED CARBON G-6

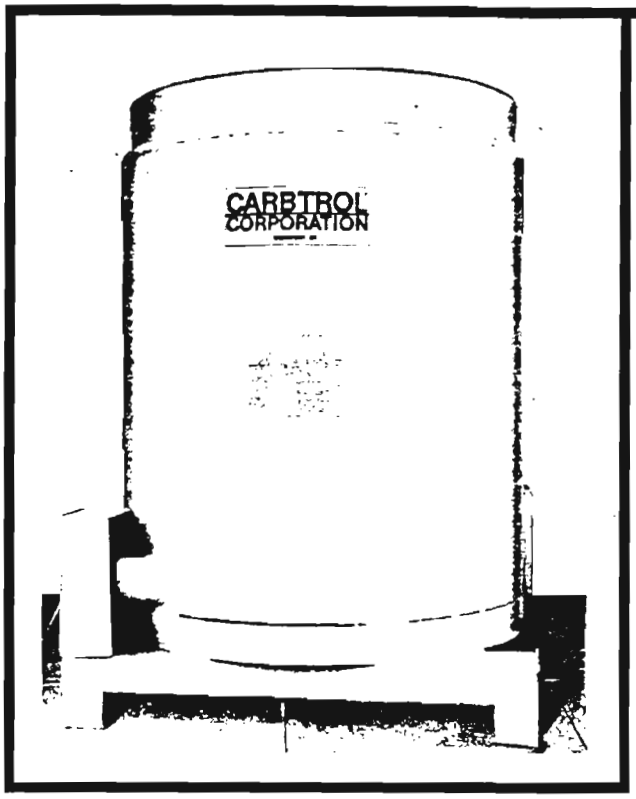

FEATURES

- Low pressure drop.
- High activity carbon.
- Fork lift fittings for easy handling.
- 4"Ø slotted inlet distributor.
- DOT rated. Acceptable for transport of hazardous waste.

SPECIFICATIONS

G-4

CARBON:	1,000 lbs.
DIMENSIONS:	45-1/2" Ø x 62" height
SHIPPING WT:	1,500 lbs.

G-6

CARBON:	1,800 lbs. *
DIMENSIONS:	45-1/2" Ø x 86" overall height
SHIPPING WT:	2,500 lbs.

* 2,000 lbs. option available

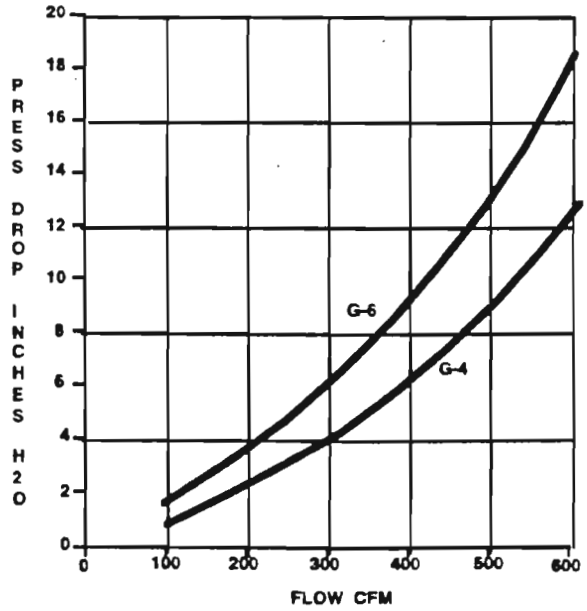

CARBTROL® CORPORATION

51 Riverside Avenue, Westport, CT 06880 • 1-800-242-1150 • (203) 226-5642

© Copyright 1991 Carbtrol Corporation - 6/28/94

AIR PURIFICATION ADSORBERS
1,000 LB. ACTIVATED CARBON G-4
1,800 LB. ACTIVATED CARBON G-6

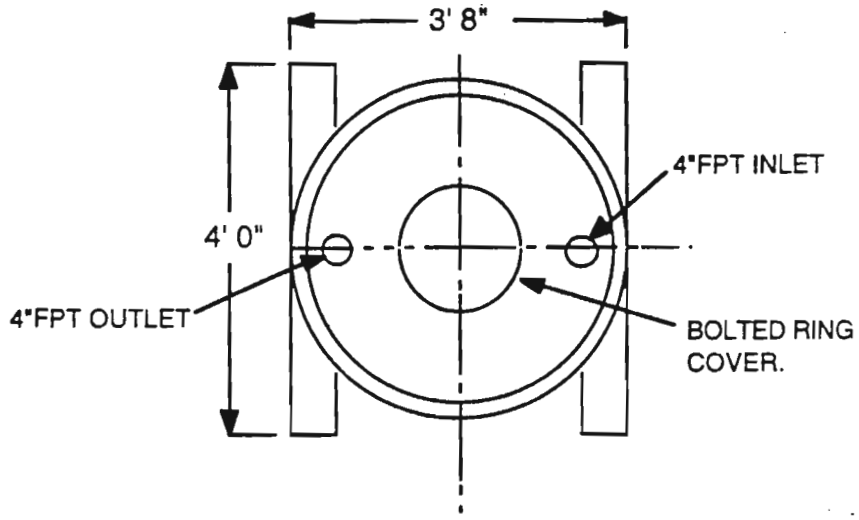

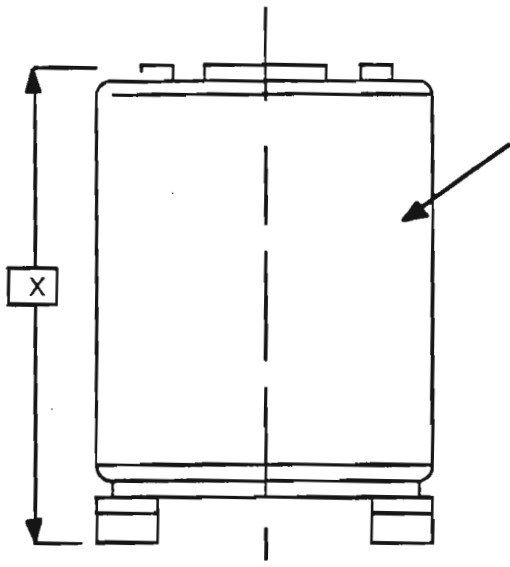

UNIT	DIM. "X"
G-4	5'-2"
G-6	7'-2"

CARBTROL®

TYPE CSL
WATER PURIFICATION CARBON

DESCRIPTION

CARBTROL CSL Water Purification Carbon is designed for use in a wide variety of liquid phase treatment applications. It is a broad range adsorbent with balanced adsorption characteristics. CSL carbons are particularly effective for the removal of dissolved toxic organics from groundwaters or industrial wastewaters.

SPECIFICATIONS

SIZE (US Sieve):	8 x 20
IODINE (No.):	1200
APPARENT DENSITY (g/cc):	0.45 to 0.50
MOISTURE (percent):	2
HARDNESS (No.):	90

APPLICATIONS

- Wastewater treatment
- Groundwater treatment
- Industrial process wastewater
- Storm water treatment

SAFETY

Wet or damp activated carbon may preferentially remove oxygen from confined spaces. If entering a vessel containing activated carbon, standard confined space entry procedures should be followed.

PRESSURE DROP vs VELOCITY
8 x 20 MESH

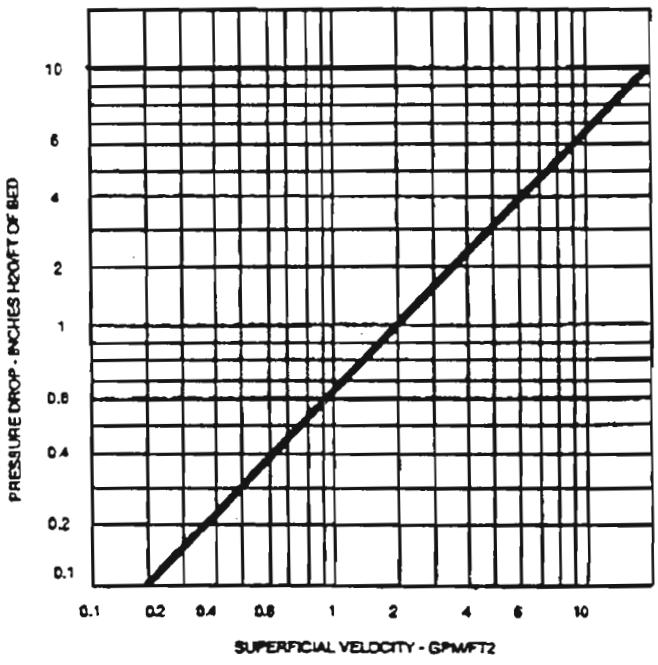

CARBTROL® CORPORATION
51 Riverside Avenue, Westport, CT 06880 • 1-800-242-1150 • (203) 226-5642
© Copyright 1991 Carbtrol Corporation - 12/7/95 AT-9512/#1

CARBTROL®

WATER PURIFICATION CANISTER 200 POUND ACTIVATED CARBON

L-1

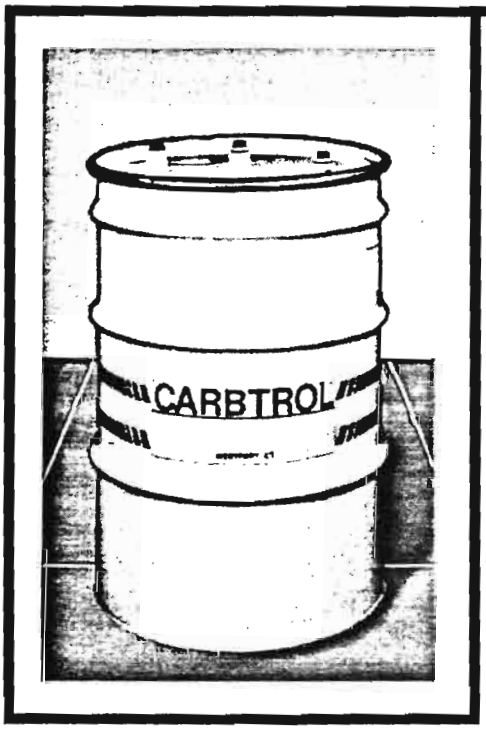

The CARBTROL L-1 (liquid) Canister handles up to 10 gpm.

FEATURES

- 200 pounds of high activity carbon.
- Large 1 1/4" internal piping. Low pressure drop allows operation of three canisters in series.
- Standard FPT couplings for easy installation - saves time and money.
- Special "no leak" lid gasket.
- Heavy duty steel drums, DOT 17C, suitable for shipment of spent hazardous carbon.
- Piping design eliminates channeling.

SPECIFICATIONS

DRUM:	24" Ø x 34" high, mild steel, epoxy phenolic internal coating with polyethylene liner.
CARBON:	200 lbs.
SHIPPING WEIGHT:	250 lbs.
INLET:	1 1/4" FPT, steel
OUTLET:	1 1/4" FPT, steel
INTERNAL PIPING:	1 1/4" PVC
DRAIN:	3/4" bung
PRESSURE DROP:	1.25 psi @ 10 gpm
MAX. OPERATING PRESSURE:	10 psi

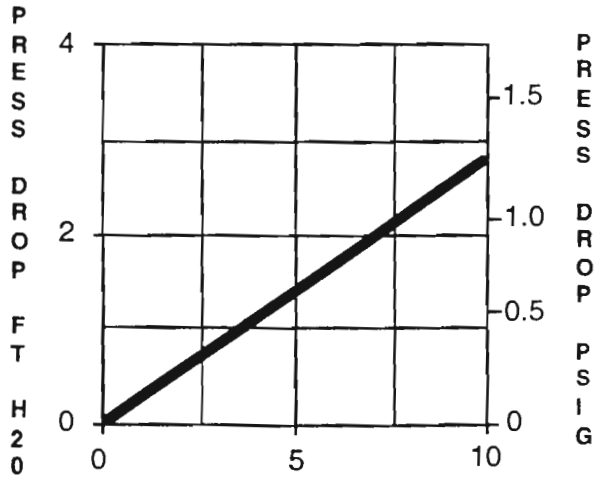

CARBTROL® CORPORATION

51 Riverside Avenue, Westport, CT 06880 • 1-800-242-1150 • (203) 226-5642

© Copyright 1991 Carbtrol Corporation - 3/23/95

WATER PURIFICATION CANISTER 200 POUND ACTIVATED CARBON

L-1

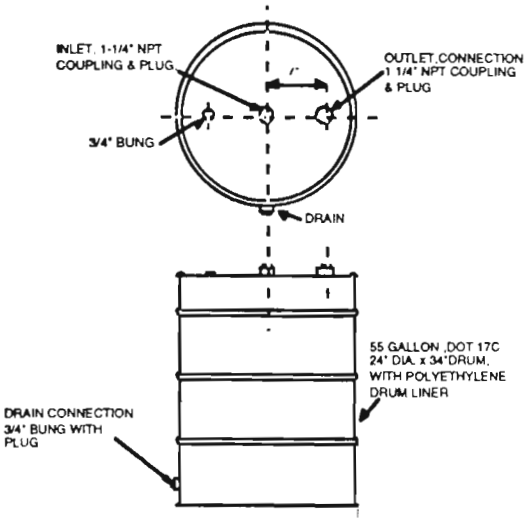

OPTIONS

Interconnecting Piping Kit

Flexible 1 1/4" diameter PVC tubing with hose clamps. Includes inlet pressure gauge and intermediate sample valve.

Pre-filter for Suspended Solids Removal

Pre-filter consisting of a basket filter piped and mounted on support frame. Filter is of carbon steel construction.

ARRANGEMENT (3) L-1 Canisters in series for 10 gpm flow (Contact time @ 10 gpm - 15 minutes)

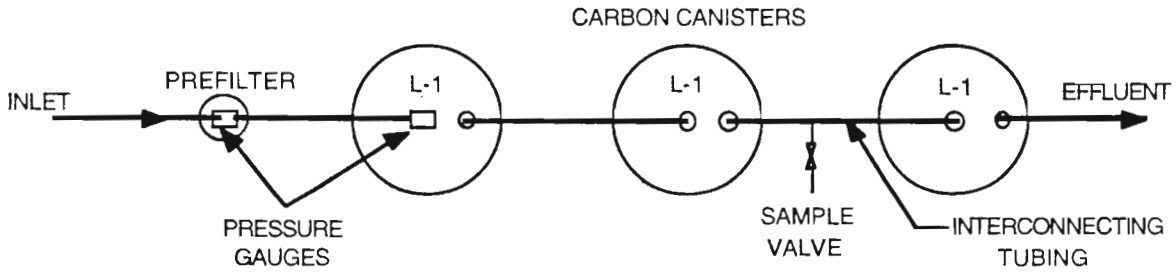

TYPICAL INSTALLATION

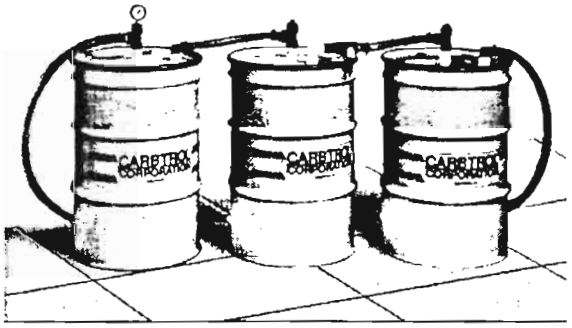

CARBTROL®
CORPORATION

39 Riverside Avenue
Westport, Connecticut 06880
1-800-242-1150 • (203) 226-5642
FAX (203) 226-5322

INSTALLATION & OPERATING INSTRUCTIONS
CARBTROL® L-1 LIQUID PHASE CANISTERS

INSTALLATION

The CARBTROL® canister should be placed in an accessible area, preferably close to the source of liquid to be treated. The inlet and outlet plugs on the canister cover should then be removed.

If the L-1 canister is to be drained after the carbon is spent by using the side drain bung, install a 3/4" valve in the bung. The valve can be a globe valve with NPT X hose thread connections so that a garden hose can be used for directing the flow as required.

To prevent air buildup during operation, the canister must be degassed by filling it with water or the liquid to be treated.

This can be accomplished by pumping the liquid at a slow rate (1 - 2 gpm) into the canister outlet port until the canister is filled. The canister should then be allowed to stand for 24 hours with inlet and outlet connections open to permit de-gassing of the carbon bed. Periodically during this time, additional liquid should be added to the canister as the level drops due to gas displacement.

Following the de-gassing period the inlet and outlet piping can be connected to the L-1 canister. During initial startup, the canister effluent liquid can be recycled for approximately 5 bed volumes, to recycle any carbon fines in the initial flow. This recycle can be accomplished at a rate equal to the processing rate.

Following the recycle, the canister can be put into continuous operation.

OPERATION

Once the CARBTROL® canister is installed it is designed to operate virtually unattended.

As contaminated liquid flows through the canister, the granular activated carbon adsorbs the impurities. The treated liquid flows into a collector at the bottom of the carbon bed and is directed to the outlet nozzle. As impurities are adsorbed on the carbon bed, it will start to become saturated and some impurities will bleed into the effluent. The bed should be replaced before the level of effluent impurity exceeds the treatment objective.

Alternatively, the useful life of a canister can be extended by operating two canisters in series. In this arrangement two canisters are connected in series and operated until the lead canister becomes completely saturated with the impurity (i.e., the effluent concentration equals the influent concentration), or the effluent impurity level of the second canister approaches the treatment objective. The lead canister is then removed from service and replaced with the second canister. The second canister is then replaced with a fresh L-1 canister.

The useful life of the canister will differ from one application to another, as the capacity of the activated carbon will vary with the type and concentration of contaminants in the liquid passed through it. For that reason the most precise measurement of canister life will come from the practical experience of using it under a specific set of operating conditions.

Spent L-1 canisters should be drained for transport. Use the 3/4" drain bung on the lower side of the canister for gravity drain, or use compressed air at 5 psi maximum to force the water out through the inlet connection. Drained liquids should be returned to the upstream feed point for reprocessing. Replace the bung once the canister is drained.

CAUTION

A. Operating pressure for CARBTROL® canisters should not exceed 10 psig.

B. Activated carbon has been known to react adversely with some contaminants. If the effect of the contaminant you wish to treat on activated carbon is unknown, then it must be tested.

C. Best results are obtained when suspended solids in the untreated liquid are removed prior to treatment in the L-1 canister. This will prevent fouling of the activated carbon, which may result in a reduction of its useful life, and in increased back pressure.

D. Reinstall the steel shipping plugs and follow all State and Federal EPA Regulations when regenerating or disposing of spent carbon canisters.

WARRANTY

This product is designed to remove toxic elements from liquids. However, there is no assurance of its capacity. SELLER WARRANTS THAT THE GOODS ARE AS DESCRIBED, BUT NO OTHER WARRANTY IS GIVEN, WHETHER EXPRESS OR IMPLIED, INCLUDING, BUT NOT LIMITED TO THE IMPLIED WARRANTIES OF MERCHANTABILITY AND FITNESS FOR A PARTICULAR PURPOSE. Seller will not be liable for loss or damage to property or any incidental or consequential loss or expense from property damage due directly or indirectly from the use of the product.

APPENDIX A-5

MANUFACTURER'S OPERATIONS AND MAINTENANCE MANUAL FOR WATER TRANSFER PUMPS

SERVICE MANUAL

MOYNO®
1000 Pumps

Moyno Industrial Products

A Unit of Robbins & Myers, Inc.

TABLE OF CONTENTS

Page

1-1. INTRODUCTION 1
1-2. GENERAL 1
1-3. SCOPE 1
1-4. NAMEPLATE DATA 1
1-5. Pump Rotation 1
1-6. Model Number 1

2-1. INSTALLATION 2
2-2. GENERAL 2
2-3. PIPING 2
2-4. Suction Piping 2
2-5. Discharge Piping 2
2-6. FOUNDATION 2
2-7. SHAFT ALIGNMENT 2
2-8. Coupling Connected Units 2
2-9. Belt Drive Units 2

3-1. OPERATION 2
3-2. INITIAL CHECK 2
3-3. START-UP 2
3-4. PACKING LEAKAGE 3

4-1. MAINTENANCE 3
4-2. GENERAL 3
4-3. PACKING ADJUSTMENT 3
4-4. PACKING REPLACEMENT 3
4-5. BEARING LUBRICATION 4
4-6. DRIVE SHAFT AND ROTOR-EXTENDED LIFE PROVISION 4
4-7. DISASSEMBLY 4
4-8. Disconnect Pump 4
4-9. Stator Removal 4
4-10. Suction Chamber Removal 4
4-11. Rotor Removal 4
4-12. Connecting Rod or Auger Assembly Removal 5
4-13. Packing Removal 5
4-14. Drive Shaft Removal 5
4-15. Bearing Removal 5
4-16. Gearbox/Gearmotor Removal 5
4-17. CLEANING 6
4-18. INSPECTION 6
4-19. Bearings 6
4-20. Drive Shaft and Intermediate Shaft 6

Page

4-21. Seals 6
4-21a. Mechanical Seals 6
4-22. Packing 6
4-23. Rotor 6
4-24. Stator 6
4-25. All Other Parts 6
4-26. ASSEMBLY 6
4-26a. One-Piece Shaft – Ball Bearing Models 7
4-26b. One-Piece Shaft – Tapered Roller Bearing Models 7
4-27. Two-Piece Shaft Models 7
4-27a. Ball Bearing Models 7
4-27b. Tapered Roller Bearing Models 7
4-28. Close-Coupled Models 7
4-29. Adjusting Bearing End Play 7
4-30. Shaft Installation 8
4-30a. Single Mechanical Seal 8
4-30b. Double Mechanical Seal 8
4-31. Connecting Rod or Auger Assembly 8
4-32. Suction Chamber 9
4-33. Stator 9
4-34. Stator/Support/Discharge Flange Assembly 9
4-35. Packing 9
4-36. Pump Connections 9
4-37. STORAGE 9
4-37a. Short-Term Storage 9
4-37b. Long-Term Storage 9
4-38. STANDARD PACKING SPECIFICATION 10
4-39. RECOMMENDED SPARE PARTS 10
4-40. HOW TO ORDER SPARE PARTS 10
4-41. STANDARD HARDWARE LIST – STANDARD AND OPEN THROAT MODELS 11
4-42. STANDARD HARDWARE LIST – CLOSE-COUPLED MODELS 12
4-43. EXPLODED VIEWS 12
4-44. Standard Model – Ball Bearing Design Drive End 12
4-45. Standard Model – Roller Bearing Design Drive End 13
4-46. Close-Coupled Models 14
4-47. Open Throat Models 15
4-48. PARTS LIST 16-26
4-49. TROUBLESHOOTING CHART 27

SERVICE MANUAL
MOYNO® 1000 PUMPS

1-1. INTRODUCTION

1-2. GENERAL

The Moyno 1000 pump is the most versatile positive displacement pump available. Its design parameters have been proven in thousands of applications over the past 60 years, and it is backed by this same half century-plus of experience in application and manufacturing know-how.

The Moyno 1000 pump is a progressing cavity pump. The pumping action is created by a single helical rotor rolling eccentrically in the double-threaded helix of the stator. In its revolution, the rotor forms, in conjunction with the stator, a series of sealed cavities 180° apart. As the rotor turns, the cavities progress from the suction to the discharge. As one cavity diminishes, the opposing cavity increases at exactly the same rate. Thus, the sum of the two discharges is a constant volume. The result is a pulsationless, positive displacement flow.

1-3. SCOPE

This service manual covers the standard, close-coupled, and open throat configurations of the Moyno 1000 pump line. Disassembly and assembly procedures are also covered in this manual.

1-4. NAMEPLATE DATA

The pump nameplate, located on the bearing housing, or drive adaptor, contains important information relative to the operation and servicing of the pump. This information includes the direction of rotation arrow and the pump model and serial numbers.

The model and serial numbers must be used when ordering spare parts. To facilitate parts ordering, the nameplate data for your pump has been recorded on the nameplate drawing on the front cover of this manual.

1-5. Pump Rotation. The direction of rotation is indicated by a rotation arrow on the nameplate. Standard rotation of Moyno 1000 pumps is clockwise, when viewed from the driven end of the pump. Close-coupled models only, are not to be run in reverse.

1-6. Model Number. The pump model number is a series of letters and numbers which identifies the pump's basic design and materials of construction. A typical model number, for example, might be A2E CDQ3AAA, as shown on the nameplate in Figure 1-1.

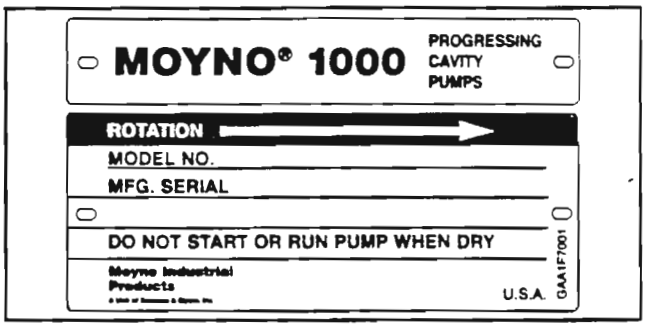

Figure 1-1. Typical nameplate showing rotation arrow, model, and manufacturing serial numbers.

The first three letters and numbers identify the pump's basic design characteristics.

In the first space, a letter designates the pump type. Letters used and their corresponding design types are as follows:

A = Standard
B = Close-coupled
C = Open throat
D = High Abrasion, Standard
E = High Abrasion, Close-coupled

The second position number identifies the number of stages in the pumping elements. This will generally be a 1, 2, or 4.

The third position is a letter, A through K, which identifies the pump's capacity in terms of gallons (gal.) per 100 revolutions. The letters, with their corresponding capacities, are:

A – .38 gal./100 revs.
B – .75 gal./100 revs.
C – 1.5 gal./100 revs.
D – 3.0 gal./100 revs.
E – 6.0 gal./100 revs.
F – 12.0 gal./100 revs.
G – 22.0 gal./100 revs.
H – 36.0 gal./100 revs.
J – 48.0 gal./100 revs.
K – 62.0 gal./100 revs.

The next 3 positions, always letters, describe the pump's "Materials of Construction" in component groups of parts.

The first letter in this group identifies the material of the suction chamber casting.

The second letter indicates the material used in the rotating parts, i.e., the drive shaft, connecting rod, rotor, and other metallic parts in contact with the material being pumped.

The third letter indicates the material of the stator. It identifies only the stator material and not that of the tube in which the stator is placed. The tube, a non-wetted part, is always alloy steel.

A typical designation such as the CDQ used in our example would result in the following:

C = Cast iron suction chamber
D = Hardened alloy steel internals including drive shaft, connecting rod, pins, and rotor
Q = Nitrile (NBR) stator (70 durometer hardness)

The following letters identify the materials used in standard construction:

C = Cast iron
D = Hardened alloy steel
S = Stainless steel, Type 316
Q = Nitrile (NBR), 70 durometer hardness
B = EPDM
F = Fluoroelastomer

The next position is a number identifying the current pump revision, this manual corresponds to revision 3.

The last three letters indicate the trim code and denote internal variations in a pump. The first letter identifies sealing variations. The second letter indicates internal variations. The third letter indicates rotor variations.

A typical trim code is AAA, designating the following:

A = Standard black packing
A = Standard plated shaft
A = Standard size chrome-plated rotor

The variations available are:

Sealing:
A – Standard black packing
C – Teflon® white packing (not food grade)
S – Single mechanical seal
D – Double mechanical seal

Internal variations:
A – Standard plated shaft
B – Non-plated shaft
P – Two-piece shaft

Rotor variations:
A – Standard plated rotor
B – Non-plated rotor
C – Standard undersize
E – Standard oversize
X – Special to order

2-1. INSTALLATION

2-2. GENERAL

Accessibility to the pump and adequate clearance should be prime considerations in any installation. Enough space should surround the unit so that maintenance can be performed with ease.

2-3. PIPING

2-4. Suction piping should be as short as possible. Normally, the suction line should be the same diameter as the pump suction; however, conditions such as high viscosity or required minimum flow velocities may dictate otherwise. Long-sweep 90-degree elbows or 45-degree elbows should be used instead of the standard elbow. Avoid using suction piping loops which trap air.

2-5. Discharge piping diameter should generally be as large as the discharge port unless fluid conditions indicate otherwise.

An easily-removable section of piping, at least twice as long as the stator, should be mated to the discharge port. This will allow the rotor and stator to be removed without having to remove the complete pump from the base.

2-6. FOUNDATION

For maximum pump-driver unit life, each unit should be mounted on a strong steel baseplate. The baseplate should be mounted on a firm foundation. The motors should be supported on close-coupled configurations above 1 HP.

2-7. SHAFT ALIGNMENT

After the base has been bolted down to the foundation, check the following conditions:

2-8. Coupling connected units. Be sure that the pump and drive shafts are aligned before the coupling is connected. Care should be exercised to ensure that all components are level and mounted in a direct line.

Check the gap between coupling halves (refer to coupling manufacturer's recommendations). Adjustment can usually be made by loosening the mounting bolts on either the pump or driver and moving the loosened component into alignment with the fixed component. Do not use a hammer! On couplings with equal diameter hubs, it may be helpful to lay a straight edge across the coupling halves to check alignment.

2-9. Belt drive units. Be sure that sheaves or sprockets are in alignment. Check belts for proper tension. Tension requirements will vary with type of belt, center distances, and belt speeds. Consult belt manufacturer for specific recommendations.

3-1. OPERATION

3-2. INITIAL CHECK

Before putting the pump into operation, the following items should be checked to ensure that each piece of equipment is installed correctly:

- Pump, driver, coupling, or sheave alignment.
- Electrical connections.
- Gauges and other instruments.
- Pump rotation. Rotation is indicated on the pump nameplate.
- Belt tension on belt driven units. There should be no appreciable deflection when first starting up.
- All valves should be open on both suction and discharge sides of pump.
- Seal flush systems if required should be operational. Double seals require flushing between faces.

CAUTION: This is a positive displacement pump. Do not operate it against a closed valve.

3-3. START-UP

CAUTION: DRY OPERATION IS HARMFUL TO THE PUMP! Never allow the pump to operate without liquid, as dry operation will cause premature wear of the stator and possible damage. The stator is lubricated by the liquid which is being pumped.

* Teflon is a registered trademark of E.I. duPont de Nemours & Co., Inc.

1. Before operating the pump for the first time, fill it with liquid to lubricate the stator for the initial start-up.

Note: If the pump is shut down temporarily, enough liquid will remain in the system to provide lubrication upon restarting. It is advisable to maintain the suction piping at a higher elevation than the centerline of the pump in order to contain some liquid in the pump at time of shutdown.

2. Once the pump has been filled with liquid, check for direction of pump rotation by momentarily starting and stopping the drive. See pump nameplate for correct rotation.

3. Start seal flush water if so equipped.

4. Start pump.

3-4. PACKING LEAKAGE

The packed stuffing box is designed to control leakage, not stop it completely. Leakage is necessary to reduce friction and dissipate heat.

In a new pump, before the packing has had a chance to seat properly, excessive leakage through the stuffing box is common. Frequent adjustments of the packing gland may be necessary during the first few hours of operation in order to compress and seat the packing. See Section 4-3.

4-1. MAINTENANCE

4-2. GENERAL

The Moyno 1000 pump has been designed for a minimum of maintenance, the extent of which is routine adjustment of the packing, and infrequent lubrication of the bearings in tapered roller bearing models. The pump is one of the easiest to work on because the main elements are very accessible and require few tools to disassemble.

4-3. PACKING ADJUSTMENT

Packing gland nuts (see Figure 4-1) should be evenly adjusted. Overtightening the packing gland may result in premature packing failure and possible damage to the shaft and gland.

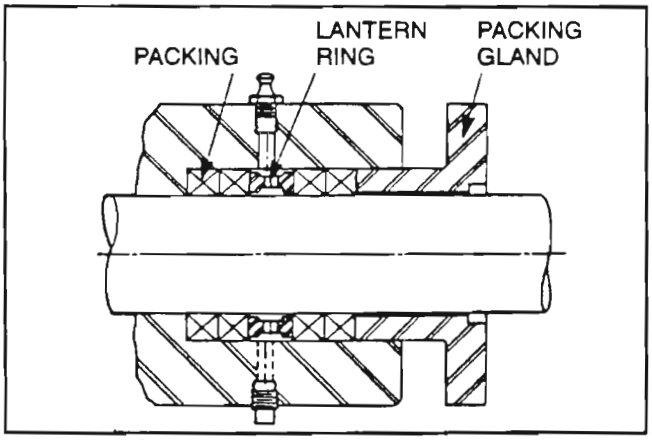

Figure 4-1. Cross Section of Packing Retainer

When packing is new, frequent minor adjustments during the first few hours of operation are recommended in order to compress and seat the packing.

1. Upon initial start-up of the pump, adjust the gland nuts for a leakage rate of 50-100 drops per minute until the packing has seated and adjusted to the operating temperature (approximately 10-15 minutes).

2. If leakage is excessive after 15 minutes of operation, tighten the gland nuts 1/4 of a turn.

3. Tighten the gland nuts 1/4 of a turn after an additional 15 minutes if necessary and repeat this procedure until a desired leakage of 1-2 drops per minute is obtained. Adding grease may also reduce leakage by providing a barrier at the lantern ring.

CAUTION: Do not tighten until zero leakage is obtained. Overtightening the packing gland may result in accelerated wear on the packing and damage to the shaft. In those situations where no packing leakage can be tolerated, consult your Moyno Authorized Service Distributor.

4-4. PACKING REPLACEMENT

Note: In this section, the first reference to each pump part will be followed by a number or a letter in parentheses ( ). These numbers and letters are those used to identify the pump parts and hardware items in the Exploded Views in Section 4-43.

When leakage can no longer be regulated by tightening the gland nuts, remove and replace the packing. The entire pump need not be disassembled to replace the packing. Briefly, replace as follows:

1. Remove packing gland nuts and lock washers and slide gland (0900) and slinger ring (6800) back along drive shaft (6000).

2. Use a packing puller tool (see Figure 4-2) to remove the packing (6900).

Figure 4-2. Packing Removal Tool

3. Inspect surface of drive shaft for excessive wear or grooves due to packing rub. If shaft is worn, or is badly scored or grooved, it should be replaced.

4. If drive shaft is not worn, install a lantern ring and 4 packing rings, lubricating them before installation with a good grade of packing grease. Be sure to stagger the packing ring joints at 90° increments.

Note: The stuffing box is supplied with 4 rings installed, a fifth ring may be added after initial compression.

CAUTION: ALWAYS USED A PROPER PACKING TAMPER TOOL TO INSTALL PACKING. Do not use a pointed or sharp tool, as damage to the packing material or drive shaft could result. To assure proper shaft lubrication, never use a one-piece spiral wrap packing.

5. Replace packing gland and secure with packing gland screws (H), lock washers, and nuts.

6. Adjust packing per Section 4-3.

4-5. BEARING LUBRICATION (BEARING MODELS ONLY)

There are two types of bearings used in Moyno 1000 pumps. The smaller models utilize ball bearings which are lubricated and permanently sealed by the bearing manufacturer. These bearings cannot be lubricated in service and generally, due to their low cost and availability, are changed periodically during routine maintenance operations.

The larger pumps, including all open throat models, utilize tapered roller bearings which can be relubricated. nder normal operating conditions, bearings should not require replacement or relubrication for at least 15,000 hours or every 2 years.

To lubricate tapered roller bearings:

1. Remove the drive shaft assembly and the bearings in accordance with with DISASSEMBLY instructions, Sections 4-14 and 4-15.

2. Clean bearing cups and cones and the shaft assembly to remove all old grease.

3. Use a good grade of EP (Extreme Pressure) Lithium soap-base grease such as Mobilux EP2 (Mobil Chemical Co.), Shell Alvania EP2 (Shell Oil Co.), or equivalent, to lubricate bearings.

4. Reassemble in accordance with the ASSEMBLY instructions, Section 4-26.

4-6. DRIVE SHAFT AND ROTOR-EXTENDED LIFE PROVISION

The heads on the drive shaft and rotor of Moyno 1000 pumps are manufactured with two sets of drive pin holes located 90° apart.

If, after many hours of service, pin hole wear is encountered, the drive shaft and/or rotor may be rotated 90° and the second set of pin holes utilized.

4-7. DISASSEMBLY

Note: In this section and in following sections on CLEANING, INSPECTION, and ASSEMBLY, the first reference to each pump part will be followed by a number or letter in parentheses ( ). These numbers and letters are those used to identify the pump parts and hardware items in the Exploded Views in Section 4-43.

4-8. Disconnect Pump

1. Disconnect the power source.

2. Close suction and discharge valves to isolate the pump from the line.

3. Remove drain plug (N or P) in bottom of suction chamber (1100) to drain any fluid remaining in pump and suction line.

4-9. Stator Removal

1. Remove section of discharge pipe attached to discharge flange (1400).

2. Remove discharge flange (1400) by unbolting from stator clamp ring (1800) and remove stator gasket (1200). Remove stator retaining ring (R) and stator clamp ring (1800) from stator (6500).

3. Remove top half of stator support (1700).

4. Unbolt stator clamp ring (1800) from suction housing, remove stator from rotor, turning stator while removing will ease disassembly. Use a screwdriver tip to carefully remove the stator retaining ring. Remove stator clamp ring (1800) from stator (6500). See Figure 4-3 for the typical retaining ring removal procedure.

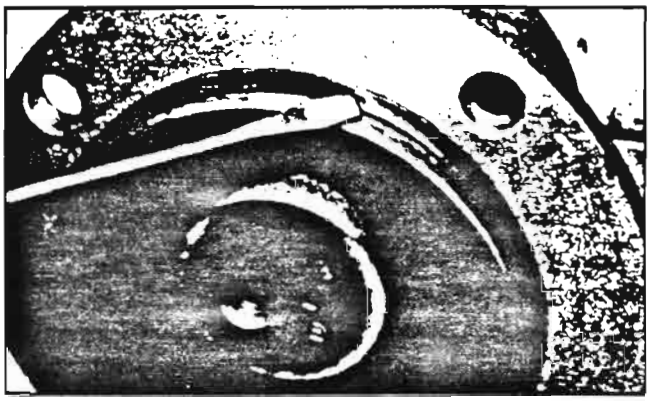

Figure 4-3. Typical Retaining Ring Removal

Note: On some four-stage models, a stator adaptor (1500) and gasket (1210) will be installed between the stator and suction chamber.

4-10. Suction Chamber Removal

1. On standard and close-coupled models, remove four suction chamber bolts and lock washers (M) holding suction chamber to bearing housing (0100). On open throat models, studs (O) screwed into the bearing housing are used in place of the suction chamber bolts. Remove four suction chamber nuts and lock washers (O) holding suction chamber to bearing housing. Remove stator gasket from housing.

2. Remove suction chamber and suction chamber gasket (1220) over the connecting rod (6200) and rotor on standard models or auger assembly (6200) and rotor on open throat models.

4-11. Rotor Removal

1. With snap ring pliers, remove the rotor head snap ring (J), sliding it down over the rotor. Some models may use spiral type rings (see Figure 4-3).

2. Carefully tap the retaining ring (6100) towards the rotor end exposing the edge of the universal joint seal (6400).

3. Remove the edge of the universal joint seal from the groove in the rotor head and fold the seal back.

4. Carefully tap the retaining ring back towards the universal joint seal until the drive pin (6300) is exposed.

4. Carefully tap the retaining ring back towards the universal joint seal until the drive pin (6300) is exposed.

5. Push the drive pin through the rotor head and remove the rotor.

6. Remove head O-ring (K) from rotor head.

4-12. Connecting Rod or Auger Assembly Removal

1. Remove the drive shaft head snap ring (J) sliding it back towards the bearing housing. Some models may have spiral type rings (see Figure 4-3).

2. Tap the retaining ring towards the bearing housing, exposing the edge of the universal joint seal.

3. Remove the edge of the universal joint seal from the groove and fold the seal back.

4. Slide the retaining ring back towards the seal until the drive pin is exposed.

5. Push the drive pin through the drive shaft head and remove the connecting rod or auger assembly from the drive shaft (6000).

6. Remove head O-ring from drive shaft head.

4-13. Packing Removal

To remove packing without removing the drive shaft and bearing assembly, refer to Section 4-4. If the drive shaft and bearing assembly are to be removed, proceed directly to Sections 4-14 and 4-15.

4-14. Drive Shaft Removal
Shaft Drive Models (one-piece shaft, not close-coupled)

The Moyno 1000 pump is designed so that the stuffing box (1000), packing gland, packing, and bearings (D or E) are removed as an assembly with the drive shaft. **For Close-Coupled models, skip to Step 17. For two-piece Shaft Drive models, skip to Step 6.**

1. Remove the drive shaft key (I).

2. Remove bearing cover screws and lock washers (A).

Note: Ball bearing models do not have a bearing cover. A bearing housing snap ring (G), located at the drive shaft end of the bearing housing, is used to position the drive shaft and bearings. This snap ring need not be removed.

3. Slide bearing cover (0300) with grease seal (B) and bearing shims (6700) off of drive shaft.

4. Using snap ring pliers, remove the bearing housing snap ring (G) located at the stuffing box end of the bearing housing.

5. Slide drive shaft assembly from bearing housing.

Shaft Drive Models (two-piece shaft, not close-coupled)

The Moyno 1000 pump is designed with a two-piece drive shaft available that allows for removal of the drive shaft head for easy seal maintenance.

6. Remove drive shaft key (I).

7. Move slinger/pin retainer (6800) toward packing or seal housing, exposing shaft pin.

8. Remove shaft pin (2000).

9. Pull intermediate shaft from bearing housing assembly (2100).

10. Inspect the sealing O-ring (2200) and replace if worn or damaged.

11. Remove mechanical seal and seal housing from bearing housing, or remove packing stuffing box from bearing housing.

12. Remove bearing cover screws and lock washers.

Note: Ball bearing models do not have a bearing cover. A bearing housing snap ring, located at the drive shaft end of the bearing housing, is used to position the drive shaft and bearings. Remove this snap ring.

13. Slide bearing cover (0300) with grease seal (B) and bearing shims (6700) off of drive shaft.

14. Slide the drive shaft/bearing assembly out of the bearing housing toward the bearing cover end.

15. Remove, if desired, the bearing housing snap ring (G) located at the stuffing box end of the bearing housing.

16. This allows removal of the grease seal housing. Inspect and replace grease seal if worn or damaged.

Close-Coupled Models Only

The Moyno 1000 close-coupled pump is designed so that the stuffing box, packing gland, and packing are removed as an assembly with the drive shaft.

17. Remove set screws (D) in locking ring (1600).

18. Rotate locking ring 90°.

19. Slide drive shaft assembly from drive adaptor, uncoupling from output shaft of drive.

Note: There is a flange on the gearbox side of the locking ring that catches on the back end of the drive shaft key. By rotating 90° the set screw holes should be 90° from the key. This will align a clearance in this locking ring for removal.

4-15. Bearing Removal (Not Close-Coupled)

1. Remove shaft snap rings (F).

2. Use an arbor press to press bearings from drive shaft. The first bearing is pressed off with its accompanying grease retainer (0500). Slide the second grease retainer off the shaft and then remove the second bearing.

Note: When replacing drive shaft or bearings on tapered roller bearing models, it is recommended that both grease seals be replaced.

3. Remove the grease seal housing (0700) and grease seal, bearing housing snap ring, slinger ring, packing gland, packing, and stuffing box from drive shaft, on one-piece shaft models.

4-16. Gearbox/Gearmotor Removal
Close-Coupled Models Only

1. To remove the gearbox/gearmotor from the pump, remove the bolts holding the gearmotor to the drive adaptor.

2. Loosen and remove two set screws in the locking ring.

3. Rotate locking ring 90° in either direction.

4. Disengage gearmotor shaft from the pump drive shaft.

Note: Rotating locking ring aligns the slots in locking ring with shaft key to allow disengagement.

4-17. CLEANING

Clean parts in a suitable cleaning solvent.

4-18. INSPECTION

4-19. Bearings. As described in Section 4-5 on Bearing Lubrication, ball bearings (E) are sealed by the manufacturer and are not designed to be relubricated and reused. The following inspection procedure applies to tapered roller bearings (D).

1. After cleaning, rotate bearings very slowly under hand pressure to feel for smooth and even action. Never spin a dry bearing. Check for cracks, galling, pitting, burrs, etc. Replace bearing if there is any doubt concerning complete serviceability; bearings should be readily available from any bearing source.

4-20. Drive Shaft and Intermediate Shaft. Inspect drive shaft (6000) and intermediate shaft (2100) if so equipped for scoring, burrs, cracks, etc. Replace as necessary. The drive shaft head is equipped with two sets of pin holes. When one set becomes worn, rotate shaft 90° and use second set.

4-21. Seals. It is sound practice to always replace grease seals (B) whenever the drive shaft and tapered roller bearings are removed.

4-21a. Mechanical Seals. It is sound practice to replace mechanical seals when the pump is disassembled. Extreme care should be taken to protect the seal faces from damage. These are fragile; avoid touching the faces and keep them clean.

The rubber bellows (Type 43) or equal seals will adhere to the shaft after assembly and must be replaced if removed from the shaft. The (Type 680) metal bellows seals or equal use O-rings to seal against the shaft and may be reused if their condition does not dictate replacement.

The rubber bellows (Type 43) or equal seals are friction-driven which makes adhesion to the shaft a necessity. The metal bellows (Type 680) seals or equal are positive driven and locked to the shaft with set screws that must be loosened to remove seal.

4-22. Packing. It is sound practice to always replace packing (6900) whenever the pump is disassembled.

4-23. Rotor

1. To check for excessive rotor (5000) wear, measure the rotor crest-to-crest diameter (see Figure 4-4) and compare with the following chart:

Rotor Size	Standard Crest-to-Crest Dia. (inches)
A	.886
B	1.061
C	1.327
D	1.671
E	2.100
F	2.676
G	3.428
H, J, K	4.015

The rotor size is designated by the third letter in the Model Number (i.e., A2ECDQ3AAA).

2. If the measured crest-to-crest diameter is within .010 in. of the standard value, the rotor is reusable provided that:

a. the rotor pin holes are not excessively worn.

b. the rotor surface is not cracked, pitted or deeply grooved (.030 in. or more).

3. Rotors with crest-to-crest diameters greater than .010 in. under the standard value should generally be replaced.

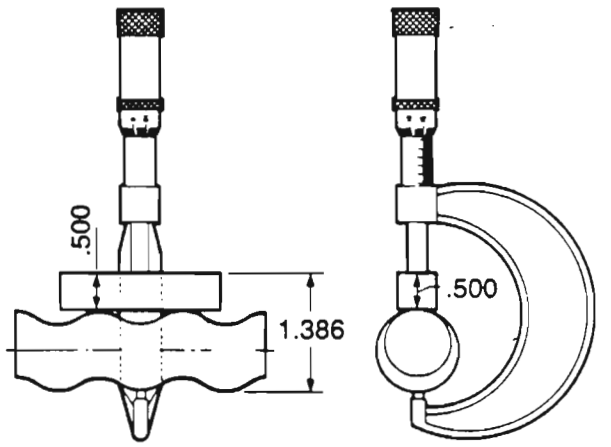

To check any rotor, place .500 in. bar across the crest on one side of the rotor. The micrometer reading minus .5 in. equals the rotor crest-to-crest diameter. Example: 1.383 in. – .500 in. = .883 in. crest-to-crest.

Figure 4-4. Measuring Rotor Diameter

4-24. Stator. The best indication of stator wear (6500) and the need for replacement is a drop in pump performance. Stators with interior surfaces that are pitted, grooved or gouged should also be replaced.

4-25. All Other Parts. Check for cracks, excessive wear, damage to threaded holes, burrs, etc. Replace as necessary. Replace O-rings (K) and all gaskets (1200, 1210, and 1220) at each disassembly and reassembly.

4-26. ASSEMBLY

Bearing Housing (One-Piece Shaft Models)
NOTE: For two-piece shaft models, go to 4-27.
For close-coupled models, go to 4-28.

1. Slide stuffing box (1000) on to drive shaft (6000), large flanged end first.

2. Slide packing gland (0900) on to shaft so that the round portion fits into the stuffing box.

3. Place slinger ring (6800) on shaft, adjacent to the packing gland.

4. Place bearing housing snap ring (G) on the shaft.

4-26a. Ball Bearing Models

1) Press sealed bearing (E) on drive shaft.

2) Install shaft snap ring (F) in groove on shaft. Seat bearing against snap ring.

3) Install second shaft snap ring.

4) Press second sealed bearing on shaft and seat against snap ring.

5) If not already in place, install bearing housing snap ring (G) in groove inside drive end of bearing housing (0100).

6) Place assembled drive shaft into bearing housing. Secure by inserting second bearing housing snap ring in groove in stuffing box end of bearing housing.

4-26b. Tapered Roller Bearing Models

1) Press grease seal (B) into grease seal housing (0700) and place assembly on shaft with chamfered side of grease seal housing facing keyway end of shaft.

2) Pack the bearings (D) **thoroughly** with grease, Mobilux EP2 or equal.

3) Place bearing cup on shaft and press bearing cone on shaft approximately .150 in. beyond snap ring groove.

4) Place grease retainer (0500) on shaft and install shaft snap ring (F) in groove on shaft.

5) Seat bearing and grease retainer against snap ring.

6) Install second shaft snap ring in groove on shaft and place second grease retainer on shaft.

7) Press bearing cone on shaft, and seat bearing and grease retainer against snap ring.

8) Fill grease seal housing with grease.

9) Slide drive shaft assembly into bearing housing. Secure by inserting bearing housing snap ring (G) in groove in bearing housing at rear of stuffing box area.

10) Fill area around the bearing in the drive end of the bearing housing with grease.

11) Complete bearing assembly by sliding bearing cup into bearing housing.

12) Press grease seal in bearing cover (0300) and place bearing cover on shaft. Secure with bearing cover screws and lock washers (A). (see Section 4-29.)

4-27. ASSEMBLY (Two-Piece Shaft Models)
NOTE: For close-coupled models, go to 4-28.

4-27a. Ball Bearing Models

1) Press sealed bearing on drive shaft.

2) Install shaft snap ring in groove on shaft. Seat bearing against snap ring.

3) Install second shaft snap ring.

4) Press second sealed bearing on shaft and seat against snap ring.

5) If not already in place, install bearing housing snap ring in groove inside stuffing box end of bearing housing.

6) Place assembled drive shaft into bearing housing. Secure by inserting second bearing housing snap ring in groove in drive end of bearing housing. Proceed to 4-30.

4-27b. Tapered Roller Bearing Models

1) Install bearing housing retaining ring in bearing housing groove.

2) Press grease seal into grease seal housing and assemble in housing with chamfered side of grease seal housing facing bearing location.

3) Slide bearing cup into the bearing housing against the seal housing.

4) Press bearing cone on shaft approximately .150" beyond snap ring groove.

5) Place grease retainer on shaft and install shaft snap ring in groove on shaft.

6) Seat bearing and grease retainer against snap ring.

7) Install second shaft snap ring in groove on shaft and place second grease retainer on shaft.

8) Press bearing cone on shaft, and seat bearing and grease retainer against snap ring.

9) Fill grease seal housing with grease.

10) Slide drive shaft assembly into bearing housing.

11) Fill area around the bearing in the drive end of the bearing housing with grease.

12) Complete bearing assembly by sliding bearing cup into bearing housing.

13) Press grease seal in bearing cover (0300) and place bearing cover on shaft. Secure with bearing cover screws and lock washers. Proceed to 4-29.

4-28. Close-Coupled Models

1) Place locking ring on drive shaft with key clearance slot aligned with keyslot in drive shaft.

2) Mount drive to the drive adaptor (0100) using four bolts, lock washers, and nuts.

3) Install drive shaft assembly into the drive adaptor while coupling drive shaft to output shaft of drive.

4) Rotate locking ring 90° and secure one set screw over the key and the other set screw at 180° through the hole in the drive shaft, securing on the output shaft of the drive.

4-29. Adjusting Bearing End Play (Tapered Roller Bearings Only)

1. Tighten bearing cover screws around bearing cover firmly, to the point the shaft will not turn. (Screws should be tightened evenly, opposite each other.)

2. Measure the gap between the bearing cover and the bearing housing.

3. Remove bearing cover and add shims (6700) to equal gap measured in step 2 plus an additional .010 in.

4. Install bearing cover with shims and tighten screws evenly, opposite each other.

5. Tap lightly on the shaft head or end using a soft mallet. Rotate shaft to "free up" assembly. You should be able to rotate the shaft by hand.

6. Shims may be added or subtracted to get the proper setting.

7. Slide the rubber pin retainer on the drive shaft pushing past the pin hole.

4-30. Intermediate Drive Shaft Installation (Mechanical Seal Pumps Proceed to 4-30a.

1. Position the packing in the stuffing box and install the gland studs, if removed.

2. Position the stuffing box in the bearing housing, sliding the packing gland on packed models onto the gland studs. Rotate the stuffing box so that the zerk fitting is on the side.

3. Install the intermediate shaft seal ring (2200) on the intermediate shaft.

4. Insert the intermediate shaft through the stuffing box, seating the end of the intermediate drive shaft into the drive shaft. Rotate the shafts to align the pin holes and insert the pin.

5. Slide the rubber pin retainer in place on the drive shaft over the pin.

4-30a. Mechanical Seal Installation (Single Seal)

1. Install the stationary component (seat and O-ring) of mechanical seal (6950) in seat of seal retainer (1000).

2. Position the seal housing in the bearing housing (1).

3. Slide the rotating component (spring and rotating seat) onto the drive shaft. It may be necessary to wipe a small amount of lubricant around inside diameter of rotating component.

4. Lock mechanical seal set screws onto shaft if mechanical seal is positively driven, locating the end of the seal flush with the end of the drive shaft.

5. Install the intermediate shaft O-ring (2200) on the intermediate shaft.

6. Insert the intermediate shaft into the drive shaft. Rotate the shafts to align the pin holes and insert the drive shaft pin, compressing the mechanical seal spring on single spring friction drive seals.

7. Locate slinger/pin retainer on the shaft covering the pin.

4-30b. Mechanical Seal Installation (Double Seal)

1. Press the stationary seat into the gland for a double seal installation, taking care not to damage the face. Put gland on shaft with care.

2. Install the seal on the shaft.

3. On double seal models the seal housing (modified packing stuffing box) is slid on the shaft, with stationary seat fitted into place. The seal assembly is then compressed by bolting the gland to the seal housing. This will bring the faces into contact.

4. Install the intermediate shaft O-ring (2200) on the intermediate shaft.

5. Insert the intermediate shaft into the drive shaft. Rotate the shafts to align the pin holes and insert the drive shaft pin.

6. Locate the slinger/pin retainer on the shaft covering the drive shaft pin.

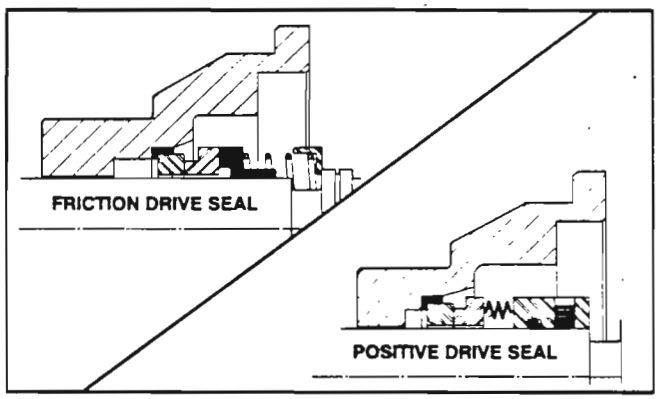

Cross Section of Typical Single Seal Installations

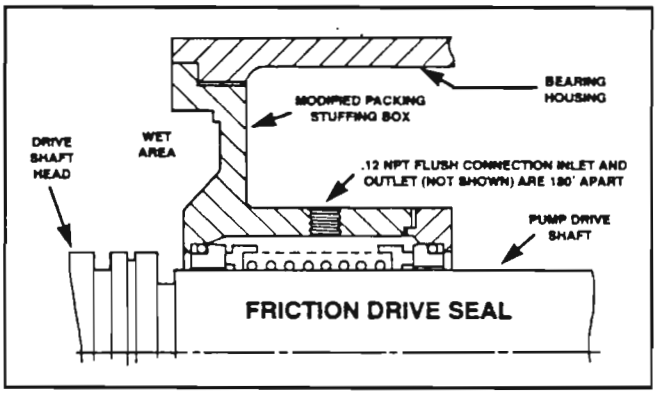

Cross Section of Typical Double Seal Installation

4-31. Connecting Rod or Auger Assembly

1. Install universal joint seal (6400) on connecting rod (or auger assembly) (6200), making sure the raised ridge inside the universal joint seal is placed in the matching groove on the connecting rod.

2. Fold other end of seal back towards center of connecting rod.

3. Spread head snap ring (J) ends and place on drive shaft between drive shaft head and stuffing box.

4. Place head O-ring (K) in matching groove on drive shaft head.

5. Fill shaft head with a good grade of EP (Extreme Pressure) lithium soap-base grease such as Shell Alvania EP1 (Shell Oil Co.), Texas Refinery Corp. 880 Crown and Chassis grease, or equivalent.

6. Slide retaining ring (6100), chamfered end first, over universal joint seal on to connecting rod.

7. Place end of connecting rod in drive shaft head and align holes. Coat drive pin (6300) with grease and insert in pin hole.

8. Slide retaining ring back over the universal joint seal and place on the drive shaft head, exposing universal joint seal groove.

9. Unfold the seal and snap the lip in matching groove on the shaft head.

10. Slide the retaining ring back, compressing the lip of the seal and exposing the snap ring groove on the shaft head. Install snap ring in groove to secure the retaining ring.

11. Using similar procedures outlined in previous steps 1 through 10, attach rotor (5000) to connecting rod or auger assembly.

4-32. Suction Chamber

1. Screw drain plug (N or P) into bottom of suction chamber.

2. Before installing the suction chamber (1100), make sure that the stuffing box and packing gland bolt holes are in a horizontal plane parallel to the pump base. If not, turn stuffing box in either direction until bolt holes are horizontal.

3. Place suction chamber gasket (1220) over projection on end of suction chamber.

4. Slide suction chamber over the rotor and connecting rod or auger assembly and fasten to the bearing housing.

On standard models, fastening is by means of suction chamber bolts and lock washers (M). On open throat models, the suction chamber slides onto studs (O) protruding from the bearing housing and is secured with nuts and lock washers.

4-33. Stator

1. Put stator gasket (1200) in place in the exposed end of suction chamber.

Note: 1. Before installation of stator, lubricate rotor and/or inside of stator with water or glycerine to facilitate installation. Be sure to use a lubricant that is compatible with the stator elastomer.

2. On four-stage models, a stator adaptor (1500) will be used. Place stator adaptor gasket (1210) in suction housing, install stator adaptor and place stator gasket in stator adaptor before installing stator.

2. Slide stator clamp rings (1800) on both ends of the stator (6500) and secure in position with retaining rings (R).

3. Slide stator (6500) over the rotor.

Note: Turning the rotor counterclockwise while inserting into stator makes assembly easier.

4. If the stator is firmly seated against the stator gasket in the suction housing recess, align the holes in clamp ring with the threaded holes in the suction housing. Thread the four hex head bolts (M) with lock washers through hole in clamp ring into the threaded holes. Tighten bolts evenly.

4-34. Stator Support/Discharge Flange Assembly

1. Place top of stator support over stator. Fasten to bottom half of stator support using hex head bolts.

Note: Some smaller models have a fabricated steel support that attaches to the stator clamp ring at the discharge end.

2. Place stator gasket in recess in discharge flange and position discharge flange on end of stator. Align holes in stator clamp ring with threaded holes in discharge flange. Install and evenly tighten the hex bolts.

4-35. Packing

1. Lubricate inside diameter of packing (6900) in accordance with manufacturer's instructions.

2. Install 4 rings of packing in stuffing box, staggering joints at 90° intervals. The lantern ring should be in between with 2 rings on each side.

Note: On new packing, typically 4 rings are installed with a 5th being added after adjustments.

3. Secure packing gland with packing gland screws, lock washer and nuts (H).

4. Adjust packing per Section 4-3.

4-36. Pump Connections

1. Install shaft key (I) in drive shaft keyway for installation of coupling or sheave.

2. Connect piping to pump.

3. Check complete pump installation per INSTALLATION instructions. (Sections 2-1 through 2-9)

4. Review OPERATION instructions per Sections 3-1 through 3-4.

4-37. STORAGE

4-37a. Short-Term Storage. Storage of six months or less will not damage the pump. However, to ensure the best possible protection, the following is advised:

1. Store pump inside whenever possible or cover with some type of protective covering. Do not allow moisture to collect around pump.

2. Remove drain plug to allow the pump body to drain and dry completely.

3. See drive manufacturer's instructions for motor and/or drive storage.

4. Every 2 or 3 weeks, rotate the pump manually a few revolutions to avoid a "set" condition of rotor in stator elastomer. This will prevent hard starting and excessive torque requirements when pump is again put into operation.

5. See OPERATION Sections 3-1 through 3-4 before start-up. Be sure all lubricants are in good condition.

4-37b. Long-Term Storage. If pump is to be in storage for more than six months, perform the above short-term storage procedures with the exception of Step 4. In its place, it is suggested that the stator be removed to avoid developing a "set" condition. In addition:

1. Apply rust inhibitor to all unpainted cast iron and machined carbon steel surfaces.

2. Remove drive belts if applicable.

4-38. STANDARD PACKING SPECIFICATION

Packing is of the braided, non-asbestos type, fully impregnated throughout with lubricant and graphite. Service is to be for medium-to-high-speed rotary shaft applications (to 10 mps or 2000 fpm) and excellent for use in low or medium pressure pumps as well as valves. Temperatures to 350°F (175°C). pH range: 4-10. Recommended packing grease Mobilux MPG 2 or equal.

4-39. RECOMMENDED SPARE PARTS

The Moyno 1000 pump has been designed and built to minimize overall operating costs. All wearable parts are replaceable. A recommended inventory of spare parts is dependent upon the application and the importance of continued operation.

To minimize down time, we recommend the following quantities of spare parts be stocked.

1 – Rotor
2 – Head O-Rings
2 – Head Snap Rings
1 – Stator
2 – Stator Gaskets
1 – Connecting Rod
2 – Universal Joint Seals*
2 – Drive Pins
1 – Packing Set

*For models utilizing a one-piece seal, a single universal joint seal should be stocked.

The above is a suggested list. For further assistance in determining what you will need for your application, contact your Moyno representative.

4-40. HOW TO ORDER SPARE PARTS

When ordering spare parts, the pump model and serial number should be supplied. The part numbers and letters shown on the exploded views apply to all models.

The following information must be supplied when ordering parts:

1. Pump model number

2. Manufacturer's serial number

3. Refer to the Exploded Views (Section 4-43 through 4-47) to locate the parts needed.

4. Refer to your particular pump model in Section 4-48 and identify the actual part number needed.

CLAMP RING BOLT CHART

Ref. No. Description	QTY [ ]	A2A B2A A1B B1B A2B B2B D4B E4B	A4A B4A	A4B B4B	A1C B2C A2C D4C B1C E4C	A4C B4C	A1D A1E D4D A2D A2E E4D B1D B1E D4E B2D B2E E4E	A4D B4D	A4E B4E
Suction End Bolts	[4]	M10x30 (AA076)	M12x50 (AA105)	M12x55 (AA106)	M12x35 (AA102)	M12x55 (AA106)	M12x40 (AA103)	M16x70 (AA159)	M16x80 (AA161)
Lockwashers	[4]	M10 (AE075)	M12 (AE100)	M12 (AE100)	M12 (AE100)	M12 (AE100)	M12 (AE100)	M16 (AE150)	M16 (AE150)
Discharge End Bolts	[4]	M10x30 (AA076)		M16x35 (AA162)			M12x35 (AA102)		
Lockwashers	[4]	M10 (AE075)		M16 (AE150)			M12 (AE100)		
Discharge End Bolts	[1]		M12x30 (AA101)		M12x30 (AA101)				
Lockwashers	[1]		M12 (AE100)		M12 (AE100)				
Discharge End Bolts	[3]		M12x35 (AA102)		M12x35 (AA102)				
Lockwashers	[3]		M12 (AE100)		M12 (AE100)				
Discharge End Bolts	[8]					M12x35 (AA102)		M16x40 (AA153)	M16x45 (AA154)
Lockwashers	[8]					M12 (AE100)		M16 (AE150)	M16 (AE150)

Ref. No. Description	QTY [ ]	A1F A2F B2F B1F D4F	A4F	A1G B1G A2G D4G	A1H A1J A2H A2J D4H A1K	C1E C2E	C1F C2F	C1G C2G	C1H C2H C2J C1J C1K
Suction End Bolts	[4]	M16x45 (AA154)	M20x90 (AA188)	M16x45 (AA154)	M20x55 (AA181)	M12x35 (AA102)	M16x40 (AA153)	M16x40 (AA153)	M20x45 (AA179)
Lockwashers	[4]	M16 (AE150)	M20 (AE175)	M16 (AE175)	M20 (AE175)	M12 (AE100)	M16 (AE150)	M16 (AE150)	M20 (AE175)
Discharge End Bolts	[4]	M16x35 (AA152)		M16x40 (AA153)	M20x45 (AA179)	M12x35 (AA102)	M16x35 (AA152)	M16x40 (AA153)	M20x45 (AA179)
Lockwashers	[4]	M16 (AE150)		M16 (AE150)	M20 (AE175)	M12 (AE100)	M16 (AE150)	M16 (AE150)	M20 (AE175)
Discharge End Bolts	[8]		M20x50 (AA180)						
Lockwashers	[8]		M20 (AE175)						

4-41. STANDARD HARDWARE LIST – STANDARD AND OPEN THROAT MODELS

NOTE: It is suggested that the standard hardware below be purchased at your local hardware outl items can be purchased from Moyno Industrial Products. The number in ( ) is Moyno reference number only.

Ref. No.	Description	QTY [ ]	MODELS											
			A2A	A1B A2B D4B	D4C A1C A2C A4A	A4B	D4D A1D A2D	D4E A1E A2E A4C C1E C2E	D4F A1F A2F A4D C1F C2F	D4G A1G A2G A4E C1G C2G	A4F	A1H A2H D4H A1J A2J	A1K C1H C2H C1J C2J C1K
A.	**Bearing Cover Screw** (Steel hex head socket, ISO metric fully threaded)		—			M8x1.25x30 [4] (AM051)			M10x1.5x40 [4] (AM078)		M10x1.5x40 [6] (AM078)		
	Lock Washer*		—			M8 (4) (AE050)			M10 (4) (AE075)		M10 (6) (AE075)		
B.	**Grease Seal** (Lip contact sealing with press fit O.D.)		—			48 O.D.x32 I.D. [2] (DA061)			68 O.D.x45 I.D. [2] (DA086)		78 O.D.x55 I.D. [1] (DA09 78 O.D.x60 I.D. [1] (DA09		
C.	**Name Plate Drive Screw** (Steel, round head, type U)	[4]	No. 2 x ¼" (AN005)			No. 2 x ¼" (AN005)			No. 2 x ¼" (AN005)		No. 2 x ¼" (AN005)		
D.	**Tapered Roller Bearing**	[2]				LM67048/LM67010 (BL005)			25580/25520 (BL010)		JM207049/JM207010 (BL015)		
E.	**Ball Bearing**	[2]	6205 Dbl. Seal (BD005)			—			—		—		
F.	**Shaft Snap Ring** (Basic external retaining ring)	[2]	Sft Ø 25 (EB004) 23.1 I.D.x1.1w			Sft Ø 32 (EB012) 29.6 I.D.x1.3w			Sft Ø 45 (EB024) 41.6 I.D.x1.6w		Sft Ø 55 (EB031) 50.6 I.D.x20.0w		
G.	**Bearing Housing Snap Ring** (Basic internal retaining ring)		52 Bore (EA015) 57.9 O.D.x2.0w [2]			58 Bore (EA022) 64.4 O.D.x2.0w [1]			82 Bore (EA035) 91.1 O.D.x2.8w [1]		95 Bore (EA041) 105.6 O.D.x2.8w [1]		
H.	**Packing Gland Screw**	[2]	M6x1.0x45 (AL029)			M8x1.25x55 (AL056)			M10x1.5x60 (AL082)		M10x1.5x70 (AL084)		
	Packing Gland Stud***	[2]	4220416001			4220417001			4220418001		4220418001		
	Hex Nut (Steel, ISO metric coarse thread)	[2]	M6x1 (AB025)			M8x1.25 (AB050)			M10x1.5 (AB075)		M10x1.5 (AB075)		
	Lock Washer*	[2]	M6 (AE025)			M8 (AE050)			M10 (AE075)		M10 (AE075)		
I.	**Shaft Key**	[1]	6x6x40 (GA007)			8x7x70 (GA012)			12x8x80 (GA021)		14x9x100 (GA024)		
J.	**Head Snap Ring** (Basic external retaining ring)†	[2]	Sft Ø 28 25.8 I.D.x1.3w (EB007)	Sft Ø 35 32.3 I.D.x1.3w (EB015)		Sft Ø 40 36.75 I.D.x1.6w (EB020)	Sft Ø 48 44.4 I.D.x1.6w (EB027)		Sft Ø 65 60.4 I.D.x2.0w (EB036)	Sft Ø 82 76.4 I.D.x2.4w (EB045)	Sft Ø 100 92.5 I.D.x2.8w (EB049)		
K.	**Head O-Ring**	[2]	25 I.D.x 2.65 Ø (CA137)	30 I.D.x 2.65 Ø (CA141)		34.5 I.D.x 2.65 Ø (CA145)	40.0 I.D.x 3.55 Ø (CA175)		58.0 I.D.x 3.55 Ø (CA188)	75.0 I.D.x 3.55 Ø (CA197)	90 I.D.x3.55 Ø (CA228)		
L.	**Clamp Ring Bolt** (Steel hex, ISO metric bolt coarse thread) **Lock Washer***		See Chart on Page 10										
R.	**Stator Ring****		[2]	RST-162 (EC022)	RS-187 EC028)	RS-236 EC034)		RS-287 (EC039)	RS-343 (EC046)	RS-450 (EC055)	RS-551 EC060)		RS-662 (EC06	
S.	**Stator Support Bolt** (Steel hex, ISO metric coarse thread)	[2]	—			M10x40 (AL078)	M10x50 (AL080)		M16x80 (AL161) (A4D & A4E M10x50) (AL080)		M16x80 (AL161)	M20x90 (AL188)	
	Lock Washer*	[2]	—			M10 (AE075)	M10 (AE075)		M16 (AE150)		M16 (AE150)	M20 (AE175)	
T.	**Optional Insp. Plate Bolt**		—			—	M6x16 (AA023)		M8x20 (AA049)	M10x25 (AA075)	M10x25 (AA075)		
	Lock Washer*		—			—	M6 (AE025)		M8 (AE050)	M10 (AE075)	M10 (AE075)		
STANDARD MODELS ONLY													
M.	**Suction Chamber Bolt** (Steel hex head, ISO metric coarse thread)	[4]	M10x1.5x35 (AA077)			M10x1.5x40 (AA078)			M16x2x55 (AA156)		M20x2.5x70 (AA184)		
	Lock Washer*	[4]	M10 (AE075)			M10 (AE075)			M16 (AE150)		M20 (AE175)		
N.	**Drain Plug†**	[1]	.5 NPT (FB012)			.5 NPT (FB012)			.75 NPT (FB018)		.75 NPT (FB018)		
OPEN THREAD MODELS ONLY													
O.	**Suction Chamber Stud** (Steel, double end ISO metric coarse thread)	[4]	—			—	M10x1.5x30 (AS076)		M16x2x45 (AS154)		M20x2.5x50 (AS180)		
	Hex Nut (Steel, ISO metric coarse thread)	[4]	—			—	M10x1.5 (AB075)		M16x2 (AB150)		M20x2.5 (AB175)		
	Lock Washer*	[4]	—			—	M10 (AE075)		M16 (AE150)		M20 (AE175)		
P.	**Drain Plug†**	[1]					1" NPT (FB020)		1" NPT (FB020)		2" NPT (FB023)		

* All lock washers are steel, single coil, helical spring.
† Stainless steel required on stainless steel models. Change the third digit of the part number to "5", i.e., Drain Plug (FB512).
** 4-stage models use the same stator rings as 2-stage models of the same element size.
*** Stuffing boxes with tapped holes use the studs.

LEGEND:
O.D. = Outer Diameter
I.D. = Inner Diameter
Ø = Diameter
w = Wide
" = Inches
NPT = American National Standard Taper Pipe
Sft = Shaft

4-42. STANDARD HARDWARE LIST – CLOSE-COUPLED MODELS

Ref. No.	Description	QTY [ ]	MODELS							
			B2A	E4B B1B B2B	B1C E4C B2C B4A	B4B	B1D B2D E4D	B1E E4E B2E B4C	B1F B2F B4D	B1G B2G B4E
C.	**Name Plate Drive Screw** (Steel, round head, type U	[2]	No. 2 x ¼" (AN005)			No. 2 x ¼" (AN005)			No. 2 x ¼" (AN005)	
D.	**Locking Ring Set Screw** (Hex socket flat point)	[2]	M6x1.0x6 (AK079)			M6x1.0x8 (AK080)			M8x1.25x10 (AK106)	
H.	**Packing Gland Screw**	[2]	M6x1.0x45 (AL029)			M8x1.25x55 (AL056)			M10x1.5x60 (AL082)	
	Packing Gland Stud* **	[2]	4220416001			4220417001			4220418001	
	Hex Nut (Steel, ISO metric coarse thread)	[2]	M6x1.0 (AB025)			M8x1.25 (AB050)			M10x1.5 (AB075)	
	Lock Washer*	[2]	M6 (AE025)			M8 (AE050)			M10 (AE075)	
J.	**Head Snap Ring** (Basic external retaining ring)†	[2]	Sft Ø 28 25.8 I.D.x1.3w 5100-112 (EB007)		Sft Ø 35 32.3 I.D.x1.3w 5100-137 (EB015)	Sft Ø 40 36.75 I.D.x1.6w 5100-156 (EB020)		Sft Ø 48 44.4 I.D.x1.6w 5100-187 (EB027)	Sft Ø 65 60.4 I.D.x2.0w 5100-255 (EB036)	Sft Ø 82 76.4 I.D.x2.4w 5100-325 (EB045)
K.	**Head O-Ring††**	[2]	23.6 I.D.x 2.65 Ø (CA137)		30 I.D.x 2.65 Ø (CA141)	34.5 I.D.x 2.65 Ø (CA145)		40.0 I.D.x 3.55 Ø (CA175)	58.0 I.D.x 3.55 Ø (CA188)	75.0 I.D.x 3.55 Ø (CA197)
L.	**Clamp Ring Bolt** (Steel hex, ISO metric coarse thread) **Lock Washer***		See Chart on Page 16							
M.	**Suction Chamber Bolt** (Steel hex head, ISO metric coarse thread)	[4]	M10x1.5x50 (AA080)			M10x1.5x50 (AA080)			M16x2x75 (AA160)	
	Hex Nut	[4]	M10x1.5 (AB075)			M10x1.5 (AB075)			M16x2 (AB150)	
	Lock Washer*	[4]	M10 (AE075)			M10 (AE075)			M16 (AE150)	
N.	**Drain Plug†**	[1]	.5 NPT (FB012)			.5 NPT (FB012)			.75 NPT (FB018)	
R.	**Stator Ring**	[2]	RST-162 (EC022)	RS-187 (EC028)	RS-243 (EC034)	RS-281 (EC039)		RS-343 (EC046)	RS-450 (EC055)	RS-551 (EC060)
S.	**Stator Support Bolt** (Steel hex nut, ISO metric coarse thread)	[2]	—			M10x40 (AL78)	M10x50 (AL080)		M16x80 (AL161) (A4D & A4E M10x50) (AL080)	
	Lock Washer	[2]	—			M10 (AE075)	M10 (AE075)		M16 (AE150)	
T.	**Optional Insp. Plate Bolt**		—			—		M6x16 (AA023)	M8x20 (AA049)	M10x25 (AA075)
	Lock Washer		—			—		M6 (AE025)	M8 (AE050)	M10 (AE075)

* All lock washers are steel, single coil, helical spring.
† Stainless steel required on stainless steel models (XX5XX).
†† Requires fluoroelastomer (CFXXX) on pumps with RF stators.
** 4-stage models use the same stator rings as 2-stage models of the same element size.
*** Stuffing boxes with tapped holes use the studs.

LEGEND:
O.D. = Outer Diameter
I.D. = Inner Diameter
Ø = Diameter
w = Wide
" = Inches
NPT = American National Standard Taper Pipe
Sft = Shaft

4-43. EXPLODED VIEWS

4-44. STANDARD MODEL – BALL BEARING DESIGN DRIVE END

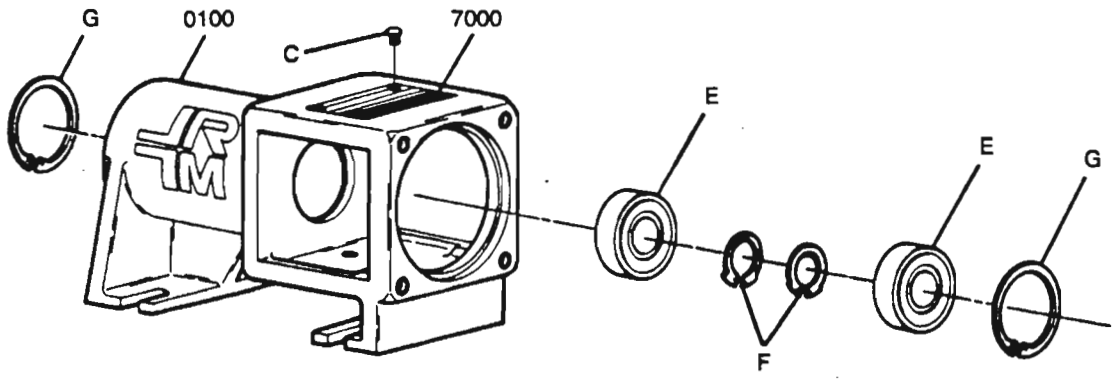

4-45. STANDARD MODEL – ROLLER BEARING DESIGN DRIVE END

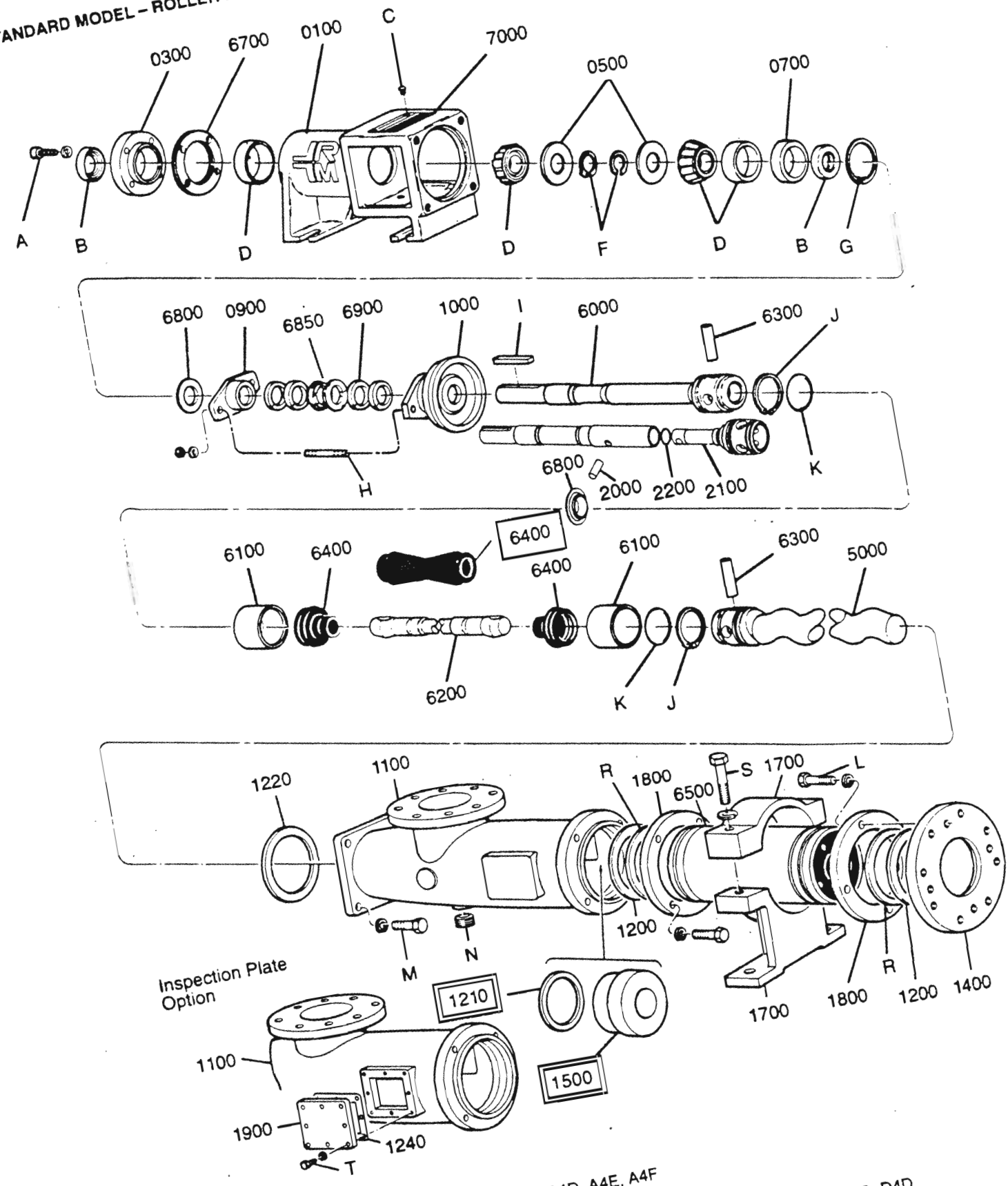

= Used on Models A4A, A4B, A4C, A4D, A4E, A4F

= Used on Models A1B, A1C, A1D, A2A, A2B, A2C, A2D, A4A, A4B, D4B, D4C, D4D

4-46. CLOSE-COUPLED MODELS

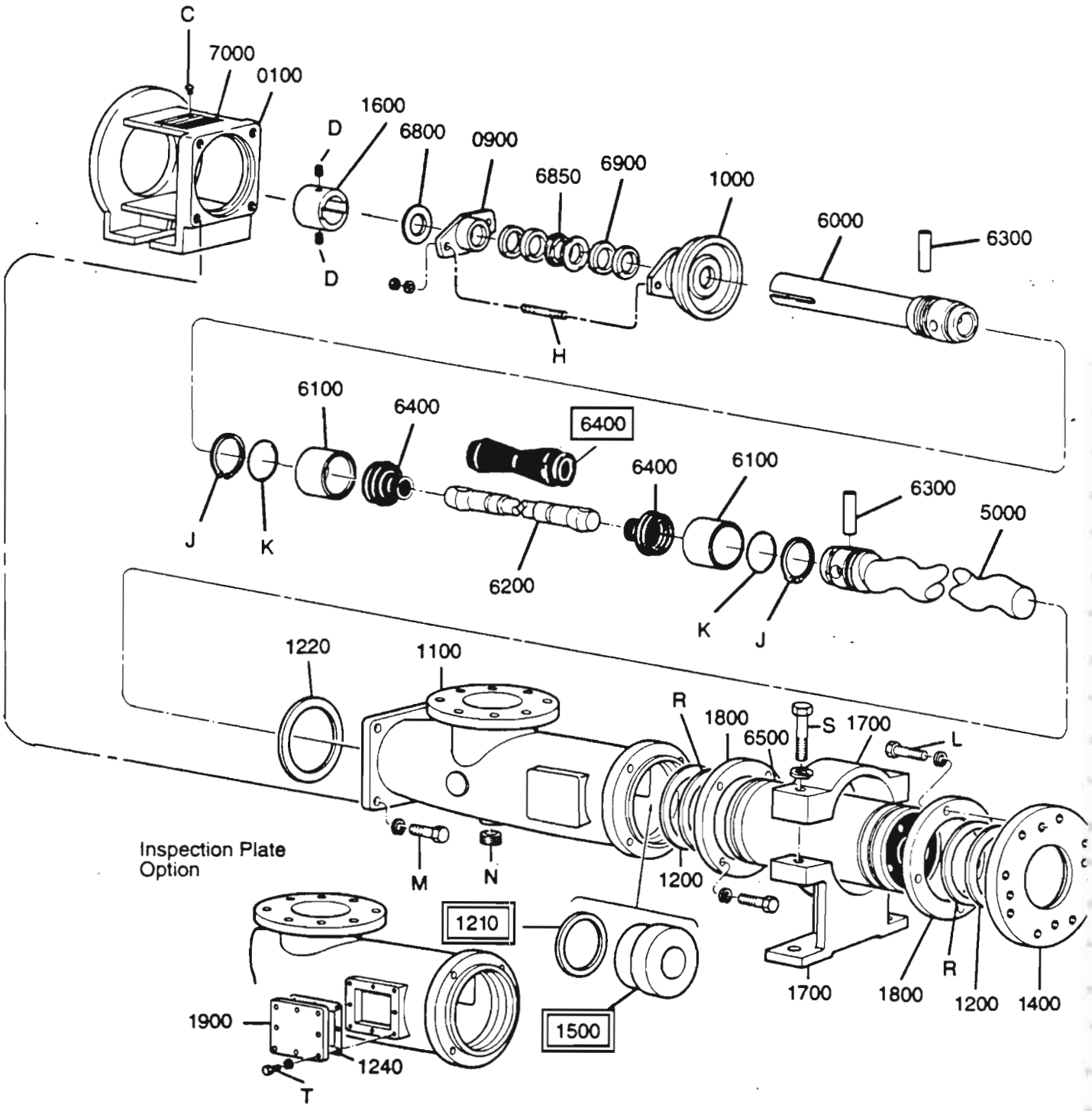

= Used on Models B4A, B4B, B4C, B4D, B4E

= Used on Models B1B, B1C, B1D, B2A, B2B, B2C, B2D, B4A, B4B, E4B, E4C, E4D

4-47. OPEN THROAT MODELS

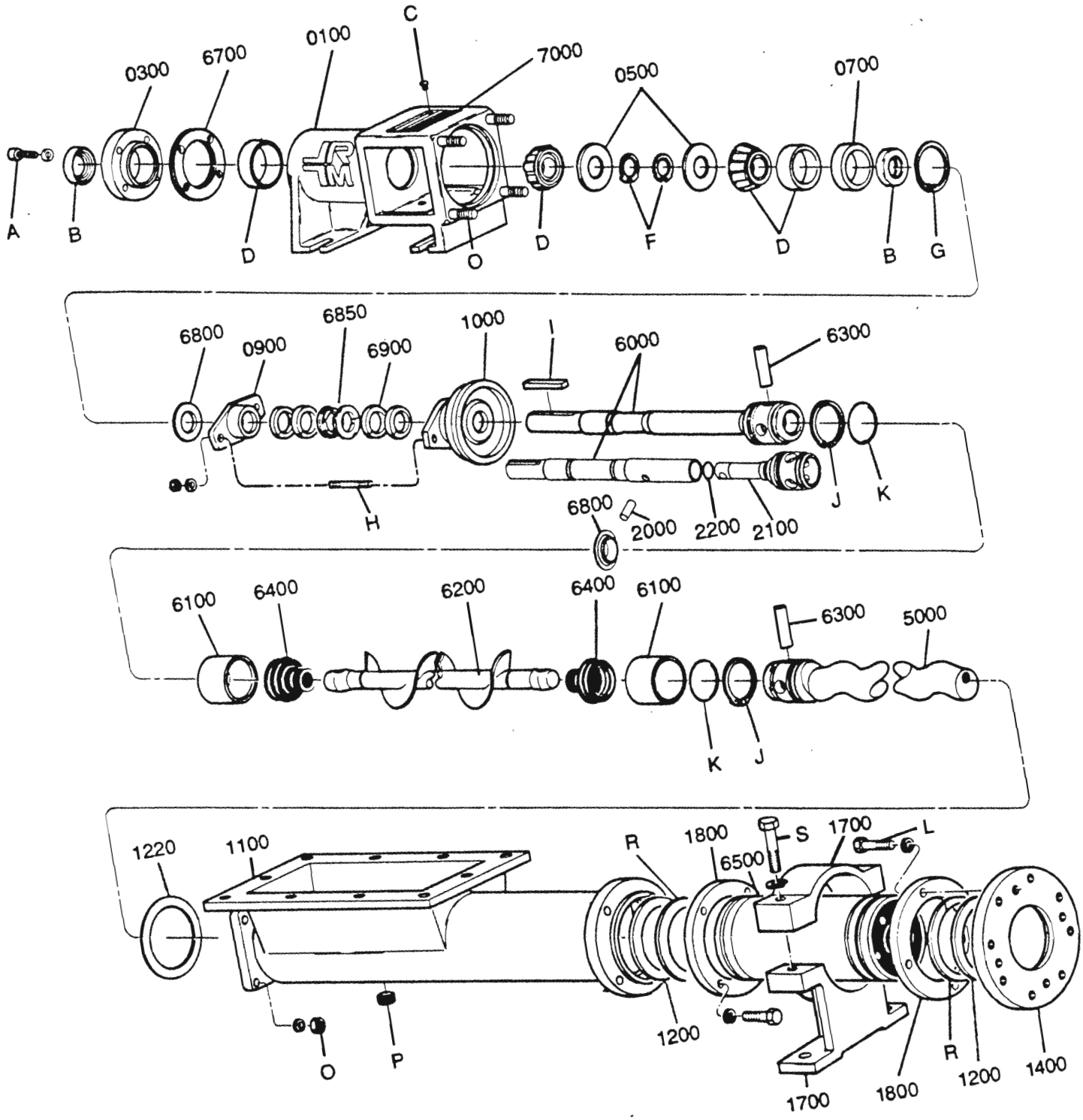

4-48. PARTS LISTS

REF.	DESCRIPTION		TYPE	PUMP A2A PART NO.	PUMP A1B PART NO.	PUMP A2B PART NO.	PUMP A1C PART NO.	PUMP A2C PART NO.
0100	BEARING HOUSING		CD/SS	CC A2A0110	CC A2A0110	CC A2A0110	CC A2A0110	CC A2A0110
0900	PACKING GLAND		CD/SS	SC A2A0910	SC A2A0910	SC A2A0910	SC A2A0910	SC A2A0910
1000	STUFFING BOX		CD SS	CC A2A1010 SC A2A1010	CC A2A1010 SC A2A1010	CC A2A1010 SC A2A1010	CC A2A1010 SC A2A1010	CC A2A1010 SC A2A1010
1000	SEAL HOUSING	* **	CD/SS CD/SS	SC A2A1011 4240833007	SC A2A1011 4240833007	SC A2A1011 4240833007	SC A2A1011 4240833007	SC A2A1011 4240833007
1100	SUCTION CHAMBER		CD SS	CC A2A1110 SC A2A1110	CC A1B1110 SC A1B1110	CC A1B1110 SC A1B1110	CC A1C1110 SC A1C1110	CC A1C1110 SC A1C1110
1200	STATOR GASKET		Q/R F B	GG A2A1200 GF A2A1200 GB A2A1200	GG A1B1200 GF A1B1200 GB A1B1200	GG A1B1200 GF A1B1200 GB A1B1200	GG A1C1200 GF A1C1200 GB A1C1200	GG A1C1200 GF A1C1200 GB A1C1200
1220	SUCTION CHAM. GASKET		Q/R F B	GG A2A1220 GF A2A1220 GB A2A1220	GG A2A1220 GF A2A1220 GB A2A1220	GG A2A1220 GF A2A1220 GB A2A1220	GG A2A1220 GF A2A1220 GB A2A1220	GG A2A1200 GF A2A1220 GB A2A1220
1400	DISCHARGE FLANGE		CD SS	MS A2A1410 SS A2A1410	MS A1B1410 SS A1B1410	MS A1B1410 SS A1B1410	MS A1C1410 SS A1C1410	MS A1C1410 SS A1C1410
1700	STATOR SUPPORT		CD/SS	MS A2A1710	MS A2A1710	MS A2A1710	MS A1C1710	MS A1C1710
1800	CLAMP RING		CD/SS	MS A2A1810	MS A1B1810	MS A1B1810	MS A1C1810	MS A1C1810
2000	SHAFT PIN		CD/SS	4220487017	4220487017	4220487017	4220487017	4220487017
2100	INTERMEDIATE SHAFT		CD SS	4250392001 4250392015	4250392001 4250392015	4250392001 4250392015	4250393001 4250393015	4250393001 4250393015
2200	SEAL RING		Q/R F B	3207902206 3207905206 3207904206	3207902206 3207905206 3207904206	3207902206 3207905206 3207904206	3207902206 3207905206 3207904206	3207902206 3207905206 3207904206
5000	ROTOR		CD SS	TS A2A5000 SS A2A5000	TS A1B5000 SS A1B5000	TS A2B5000 SS A2B5000	TS A1C5000 SS A1C5000	TS A2C5000 SS A2C5000
6000	DRIVE SHAFT		CD SS	AS A2A6000 SS A2A6000	AS A2A6000 SS A2A6000	AS A2A6000 SS A2A6000	AS A1C6000 SS A1C6000	AS A1C6000 SS A1C6000
6000	DRIVE SHAFT (2-PIECE OPTION)		CD SS	4250378001 4250378015	4250378001 4250378015	4250378001 4250378015	4250378001 4250378015	4250378001 4250378015
6100	RETAINING RING		CD/SS	ST A2A6100	ST A2A6100	ST A2A6100	ST A1C6100	ST A1C6100
6200	CONNECTING ROD		CD/SS	AS A2A6200	AS A2A6200	AS A2A6200	AS A1C6200	AS A1C6200
6300	DRIVE PIN		CD/SS	TR A2A6300	TR A2A6300	TR A2A6300	TR A1C6300	TR A1C6300
6400	JOINT SEAL		Q/R F/B	RD A2A6400 RF A2A6400	RD A2A6400 RF A2A6400	RD A2A6400 RF A2A6400	RD A1C6400 RF A1C6400	RD A1C6400 RF A1C6400
6500	STATOR		Q R F B	RQ A2A6510 RR A2A6510 RF A2A6510 RB A2A6510	RQ A1B6510 RR A1B6510 RF A1B6510 RB A1B6510	RQ A2B6510 RR A2B6510 RF A2B6510 RB A2B6510	RQ A1C6510 RR A1C6510 RF A1C6510 RB A1C6510	RQ A2C6510 RR A2C6510 RF A2C6510 RB A2C6510
6800	SLINGER RING		CD/SS	RZ A2A6800	RZ A2A6800	RZ A2A6800	RZ A2A6800	RZ A2A6800
6800	SLINGER/PIN RETNR (2-PIECE OPTION)		CD/SS	423052800	423052800	423052800	423052800	423052800
6850	LANTERN RING		CD/SS	GR A2A6850	GR A2A6850	GR A2A6850	GR A2A6850	GR A2A6850
6900	PACKING		STD. PTFE	PC A2A6901 3403655001	PC A2A6901 3403655001	PC A1A6901 3403655001	PC A2A6901 3403655001	PC A2A6901 3403655001
7000	NAME PLATE		CD/SS	GA A2A7000	GA A2A7000	GA A2A7000	GA A2A7000	GA A2A7000
K	O-RING		Q/R F/B	CA137 CF137	CA137 CF137	CA137 CF137	CA141 CF141	CA141 CF141
J	SNAP RING		CD SS	EB007 EB507	EB007 EB507	EB007 EB507	EB015 EB515	EB015 EB515
R	STATOR RING		CD/SS	EC022	EC028	EC028	EC034	EC034

*FRICTION DRIVEN SEAL, TYPE 43 OR EQUAL
**POSITIVE DRIVE SEAL, TYPE 680 OR EQUAL
NOTE: CONTACT FACTORY FOR REPLACEMENT MECHANICAL SEAL PART NUMBERS

PARTS LIST (Cont.)

REF.	DESCRIPTION	TYPE	PUMP A4A PART NO.	PUMP A4B PART NO.	PUMP A4C PART NO.	PUMP A4D PART NO.	PUMP A4E PART NO.	PUMP A4F PART NO.
0100	BEARING HOUSING	CD/SS	CC A2A0110	CC A1D0110	CC A1D0110	CC A1F0110	CC A1F0110	CC A1H0110
0300	BEARING COVER	CD/SS		CC A1D0300	CC A1D0300	CC A1F0300	CC A1F0300	CC A1H0300
0500	GREASE RETAINER	CD/SS		MS A1D0500	MS A1D0500	MS A1F0500	MS A1F0500	MS A1H0500
0700	GREASE SEAL HSG.	CD/SS		MS A1D0700	MS A1D0700	MS A1F0700	MS A1F0700	MS A1H0700
0900	PACKING GLAND	CD/SS	SC A1A0910	SC A1D0910	SC A1D0910	SC A1F0910	SC A1F0910	SC A1H0910
1000	STUFFING BOX	CD SS	CC A2A1010 SC A2A1010	CC A1D1010 SC A1D1010	CC A1D1010 SC A1D1010	CC A1F1010 SC A1F1010	CC A1F1010 SC A1F1010	CC A1H1010 SC A1H1010
1000	SEAL HOUSING *	CD/SS	SC A2A1011	SC A1D1011	SC A1D1011	SC A1F1011	SC A1F1011	SC A1H1011
	**	CD/SS	4240833007	4240834007	4240834007	4240835007	4240835007	4240836007
1100	SUCTION CHAMBER	CD SS	CC A1C1110 SC A1C1110	CC A1D1110 SC A1D1110	CC A1E1110 SC A1E1110	CC A1F1110 SC A1F1110	CC A1G1110 SC A1G1110	CC A1H1110 SC A1H1110
1200	STATOR GASKET	Q/R F B	GG A2A1200 GF A2A1200 GB A2A1200	GG A1B1200 GF A1B1200 GB A1B1200	GG A1C1200 GF A1C1200 GB A1C1200	GG A1D1200 GF A1D12300 GB A1D1200	GG A1E1200 GF A1E1200 GB A1E1200	GG A1F1200 GF A1F1200 GB A1F1200
1210	STATOR ADAPTOR GASKET	Q/R F B	GG A1C1200 GF A1C1200 GB A1C1200	GG A1D1200 GF A1D1200 GB A1D1200	GG A1E1200 GF A1E1200 GB A1E1200	GG A1F1200 GF A1F1200 GB A1F1200	GG A1G1200 GF A1G1200 GB A1G1200	GG A1H1200 GF A1H1200 GB A1H1200
1220	SUCTION CHAM. GASKET	Q/R F B	GG A2A1220 GF A2A1220 GB A2A1220	GG A1D1220 GF A1D1220 GB A1D1220	GG A1D1220 GF A1D1220 GB A1D1220	GG A1F1220 GF A1F1220 GB A1F1220	GG A1F1220 GF A1F1220 GB A1F1220	GG A1H1220 GF A1H1220 GB A1H1220
1240	INSP. PLATE GSKT.	Q/R F B					GG A1G1240 GF A1G1240 GB A1G1240	GG A1H1240 GF A1H1240 GB A1H1240
1400	DISCHARGE FLANGE	CD SS	MS A4A1410 SS A4A1410	MS A4B1410 SS A4B1410	MS A4C1410 SS A4C1410	MS A4D1410 SS A4D1410	MS A4E1410 SS A4E1410	MS A4F1410 SS A4F1410
1500	STATOR ADAPTOR	CD SS	MS A4A1510 SS A4A1510	MS A4B1510 SS A4B1510	MS A4C1510 SS A4C1510	MS A4D1510 SS A4D1510	MS A4E1510 SS A4E1510	MS A4F1510 SS A4F1510
1700	STATOR SUPPORT	CD/SS	MS A4A1710	CC A4B1710	CC A4C1710	CC A4D1710	CC A4E1710	CC A4F1710
1800	CLAMP RING	CD/SS CD/SS	MS A4A1810 MS A4A1811	MS A4B1810 MS A4B1811	MS A4C1810 MS A4C1811	MS A4D1810 MS A4D1811	MS A4E1810 MS A4E1811	MS A4F1810 MS A4F1811
1900	INSPECTION PLATE	CD SS					MS A1G1900 SS A1G1900	MS A1H1900 SS A1H1900
2000	SHAFT PIN	CD/SS	4220487017	4220488017	4220488017	4220489017	4220489017	4220492017
2100	INTERMEDIATE SHAFT	CD SS	4250393001 4250393017	4250394001 4250394017	4250395001 4250395017	4250396001 4250396017	4250397001 4250397017	4250398001 4250398017
2200	SEAL RING	Q/R F B	3207902206 3207905206 3207904206	3207902210 3207905210 3207904210	3207902210 3207905210 3207904210	3207902216 3207905216 3207904216	3207902216 3207905216 3207904216	3207902223 3207905223 3207904223
5000	ROTOR	CD SS	TS A4A5000 SS A4A5000	TS A4B5000 SS A4B5000	TS A4C5000 SS A4C5000	TS A4D5000 SS A4D5000	TS A4E5000 SS A4E5000	TS A4F5000 SS A4F5000
6000	DRIVE SHAFT	CD SS	AS A1C6000 SS A1C6000	AS A1D6000 SS A1D6000	AS A1E6000 SS A1E6000	AS A1F6000 SS A1F6000	AS A1G6000 SS A1G6000	AS A1H6000 SS A1H6000
6000	DRIVE SHAFT (2-PIECE OPTION)	CD SS	4250378001 4250378015	4250379001 4250379015	4250379001 4250379015	4250380001 4250380015	4250380001 4250380015	4250381001 4250381015
6100	RETAINING RING	CD/SS	ST A1C6100	ST A1D6100	ST A1E6100	ST A1F6100	SG A1G6100	ST A1H6100
6200	CONNECTING ROD	CD SS	AS A1C6200 AS A1C6200	AS A1D6200 AS A1D6200	AS A1E6200 SS A1E6200	AS A1F6200 SS A1F6200	AS A1G6200 SS A1G6200	AS A1H6200 SS A1H6200
6300	DRIVE PIN	CD/SS	TR A1C6300	TR A1D6300	TR A1E6300	TR A1F6300	TR A1G6300	TR A1H6300
6400	JOINT SEAL	Q/R F/B	RD A1C6400 RF A1C6400	RD A1D6400 RF A1D6400	RD A1E6400 RF A1E6400	RD A1F6400 RF A1F6400	RD A1G6400 RF A1G6400	RD A1H6400 RF A1H6400
6500	STATOR	Q R F B	RQ A4A6510 RR A4A6510 RF A4A6510 RB A4A6510	RQ A4B6510 RR A4B6510 RF A4B6510 RB A4B6510	RQ A4C6510 RR A4C6510 RF A4C6510 RB A4C6510	RQ A4D6510 RR A4D6510 RF A4D6510 RB A4D6510	RQ A4E6510 RR A4E6510 RF A4E6510 RB A4E6510	RQ A4F6510 RR A4F6510 RF A4F6510 RB A4F6510
6700	BEARING SHIMS	CD/SS		GP A1D6700	GP A1D6700	GP A1F6700	GP A1F6700	GP A1H6700
6800	SLINGER RING	CD/SS	RZ A2A6800	RZ A1D6800	RZ A1D6800	RZ A1F6800	RZ A1F6800	RZ A1H6800
6800	SLINGER/PIN RETNR (2-PIECE OPTION)	CD/SS	4230528000	4230529000	4230529000	4230530000	4230530000	4230531000
6850	LANTERN RING	CD/SS	GR A2A6850	GR A1D6850	GR A1D6850	GR A1F6850	GR A1F6850	GR A1H6850
6900	PACKING	STD. PTFE	PC A2A6901 3403655001	PC A1D6901 3403655002	PC A1D6901 3403655002	PC A1F6901 3403655003	PC A1F6901 3403655003	PC A1H6901 3403655004
7000	NAME PLATE	CD/SS	GA A2A7000	GA A2A7000	GA A2A7000	GA A1F7000	GA A1F7000	GA A1F7000
K	O-RING	Q/R F/B	CA141 CF141	CA145 CF145	CA175 CF175	CA188 CF188	CA197 CF197	CA228 CF228
J	SNAP RING	CD SS	EB015 EB515	EB020 EB520	EB027 EB527	EB036 EB536	EB045 EB545	EB049 EB549
R	STATOR RING	CD/SS	EC022	EC028	EC034	EC039	EC046	EC055

*FRICTION DRIVE SEAL, TYPE 43 OR EQUAL
**POSITIVE DRIVE SEAL, TYPE 680 OR EQUAL
NOTE: CONTACT FACTORY FOR REPLACEMENT MECHANICAL SEAL PART NUMBERS

PARTS LIST (Cont.)

REF.	DESCRIPTION	TYPE	PUMP A1D PART NO.	PUMP A2D PART NO.	PUMP A1E PART NO.	PUMP A2E PART NO.	PUMP A1F PART NO.	PUMP A2F PART NO.
0100	BEARING HOUSING	CD/SS	CC A1D0110	CC A1D0110	CC A1D0110	CC A1D0110	CC A1F0110	CC A1F0110
0300	BEARING COVER	CD/SS	CC A1D0300	CC A1D0300	CC A1D0300	CC A1D0300	CC A1F0300	CC A1F0300
0500	GREASE RETAINER	CD/SS	MS A1D0500	MS A1D0500	MS A1D0500	MS A1D0500	MS A1F0500	MS A1F0500
0700	GREASE SEAL HSG.	CD/SS	MS A1D0700	MS A1D0700	MS A1D0700	MS A1D0700	MS A1F0700	MS A1F0700
0900	PACKING GLAND	CD/SS	SC A1D0910	SC A1D0910	SC A1D0910	SC A1D0910	SC A1F0910	SC A1F0910
1000	STUFFING BOX	CD SS	CC A1D1010 SC A1D1010	CC A1D1010 SC A1D1010	CC A1D1010 SC A1D1010	CC A1D1010 SC A1D1010	CC A1F1010 SC A1F1010	CC A1F1010 SC A1F1010
1000	SEAL HOUSING *	CD/SS	SC A1D1011	SC A1D1011	SC A1D1011	SC A1D1011	SC A1F1011	SC A1F1011
	**	CD/SS	4240834007	4240834007	4240834007	4240834007	4240835007	4240835007
1100	SUCTION CHAMBER	CD SS	CC A1D1110 SC A1D1110	CC A1D1110 SC A1D1110	CC A1E1110 SC A1E1110	CC A1E1110 SC A1E1110	CC A1F1110 SC A1F1110	CC A1F1110 SC A1F1110
1200	STATOR GASKET	Q/R F B	GG A1D1200 GF A1D1200 GB A1D1200	GG A1D1200 GF A1D1200 GB A1D1200	GG A1E1200 GF A1E1200 GB A1E1200	GG A1E1200 GF A1E1200 GB A1E1200	GG A1F1200 GF A1F1200 GB A1F1200	GG A1F1200 GF A1F1200 GB A1F1200
1220	SUCTION CHAM. GASKET	Q/R F B	GG A1D1220 GF A1D1220 GB A1D1220	GG A1D1220 GF A1D1220 GB A1D1220	GG A1D1220 GF A1D1220 GB A1D1220	GG A1D1220 GF A1D1220 GB A1D1220	GG A1F1220 GF A1F1220 GB A1F1220	GG A1F1220 GF A1F1220 GB A1F1220
1240	INSP. PLATE GSKT.	Q/R F B			GG A1E1240 GF A1E1240 GB A1E1240	GG A1E1240 GF A1E1240 GB A1E1240	GG A1F1240 GF A1F1240 GB A1F1240	GG A1F1240 GF A1F1240 GB A1F1240
1400	DISCHARGE FLANGE	CD SS	MS A1D1410 SS A1D1410	MS A1D1410 SS A1D1410	MS A1E1410 SS A1E1410	MS A1E1410 SS A1E1410	MS A1F1410 SS A1F1410	MS A1F1410 SS A1F1410
1700	STATOR SUPPORT	CD/SS	CC A1D1710	CC A1D1710	CC A1E1710	CC A1E1710	CC A1F1710	CC A1F1710
1800	CLAMP RING	CD/SS	MS A1D1810	MS A1D1810	MS A1E1810	MS A1E1810	MS A1F1810	MS A1F1810
1900	INSPECTION PLATE	CD SS			MS A1E1900 SS A1E1900	MS A1E1900 SS A1E1900	MS A1F1900 SS A1F1900	MS A1F1900 SS A1F1900
2000	SHAFT PIN	CD/SS	4220488017	4220488017	4220488017	4220488017	4220489017	4220489017
2100	INTERMEDIATE SHAFT	CD SS	4250394001 4250394017	4250394001 4250394017	4250395001 4250395017	4250395001 4250395017	4250396001 4250396017	4250396001 4250396017
2200	SEAL O-RING	Q/R F B	3207902210 3207905210 3207904210	3207902210 3207905210 3207904210	3207902210 3207905210 3207904210	3207902210 3207905210 3207904210	3207902216 3207905216 3207904216	3207902216 3207905216 3207904216
5000	ROTOR	CD SS	TS A1D5000 SS A1D5000	TS A2D5000 SS A2D5000	TS A1E5000 SS A1E5000	TS A2E5000 SS A2E5000	TS A1F5000 SS A1F5000	TS A2F5000 SS A2F5000
6000	DRIVE SHAFT	CD SS	AS A1D6000 SS A1D6000	AS A1D6000 SS A1D6000	AS A1E6000 SS A1E6000	AS A1E6000 SS A1E6000	AS A1F6000 SS A1F6000	AS A1F6000 SS A1F6000
6000	DRIVE SHAFT (2-PIECE OPTION)	CD SS	4250379001 4250379015	4250379001 4250379015	4250379001 4250379015	4250379001 4250379015	4250380001 4250380015	4250380001 4250380015
6100	RETAINING RING	CD/SS	ST A1D6100	ST A1D6100	ST A1E6100	ST A1E6100	SG A1F6100	ST A1F6100
6200	CONNECTING ROD	CD SS	AS A1D6200 AS A1D6200	AS A1D6200 AS A1D6200	AS A1E6200 SS A1E6200	AS A1E6200 SS A1E6200	AS A1F6200 SS A1F6200	AS A1F6200 SS A1F6200
6300	DRIVE PIN	CD/SS	TR A1D6300	TR A1D6300	TR A1E6300	TR A1E6300	TR A1F6300	TR A1F6300
6400	JOINT SEAL	Q/R F/B	RD A1D6400 RF A1D6400	RD A1D6400 RF A1D6400	RD A1E6400 RF A1E6400	RD A1E6400 RF A1E6400	RD A1F6400 RF A1F6400	RD A1F6400 RF A1F6400
6500	STATOR	Q R F B	RQ A1D6510 RR A1D6510 RF A1D6510 RB A1D6510	RQ A2D6510 RR A2D6510 RF A2D6510 RB A2D6510	RQ A1E6510 RR A1E6510 RF A1E6510 RB A1E6510	RQ A2E6510 RR A2E6510 RF A2E6510 RB A2E6510	RQ A1F6510 RR A1F6510 RF A1F6510 RB A1F6510	RQ A2F6510 RR A2F6510 RF A2F6510 RB A2F6510
6700	BEARING SHIMS	CD/SS	GP A1D6700	GP A1D6700	GP A1D6700	GP A1D6700	GP A1F6700	GP A1F6700
6800	SLINGER RING	CD/SS	RZ A1D6800	RZ A1D6800	RZ A1D6800	RZ A1D6800	RZ A1F6800	RZ A1F6800
6800	SLINGER/PIN RETNR (2-PIECE OPTION)	CD/SS	4230529000	4230529000	4230529000	4230529000	4230530000	4230530000
6850	LANTERN RING	CD/SS	GR A1D6850	GR A1D6850	GR A1D6850	GR A1D6850	GR A1F6850	GR A1F6850
6900	PACKING	STD. PTFE	PC A1D6901 3403655002	PC A1D6901 3403655002	PC A1D6901 3403655002	PC A1D6901 3403655002	PC A1F6901 3403655003	PC A1F6901 3403655003
7000	NAME PLATE	CD/SS	GA A2A7000	GA A2A7000	GA A2A7000	GA A2A7000	GA A1F7000	GA A1F7000
K	O-RING	Q/R F/B	CA145 CF145	CA145 CF145	CA175 CF175	CA175 CF175	CA188 CF188	CA188 CF188
J	SNAP RING	CD SS	EB020 EB520	EB020 EB520	EB027 EB527	EB027 EB527	EB036 EB536	EB036 EB536
R	STATOR RING	CD/SS	EC039	EC039	EC046	EC046	EC055	EC055

*FRICTION DRIVEN SEAL, TYPE 43 OR EQUAL
**POSITIVE DRIVE SEAL, TYPE 680 OR EQUAL
NOTE: CONTACT FACTORY FOR REPLACEMENT MECHANICAL SEAL PART NUMBERS

PARTS LIST (Cont.)

REF.	DESCRIPTION	TYPE	PUMP A1G PART NO.	PUMP A2G PART NO.	PUMP A1H PART NO.	PUMP A2H PART NO.	PUMP A1J PART NO.	PUMP A2J PART NO.	PUMP A1K PART NO.
0100	BEARING HOUSING	CD/SS	CC A1F0110	CC A1F0110	CC A1H0110	CC A1H0110	CC A1H0110	CC A1H0110	CC A1H0110
0300	BEARING COVER	CD/SS	CC A1F0300	CC A1F0300	CC A1H0300	CC A1H0300	CC A1H0300	CC A1H0300	CC A1H0300
0500	GREASE RETAINER	CD/SS	MS A1F0500	MS A1F0500	MS A1H0500	MS A1H0500	MS A1H0500	MS A1H0500	MS A1H0500
0700	GREASE SEAL HSG.	CD/SS	MS A1F0700	MS A1F0700	MS A1H0700	MS A1H0700	MS A1H0700	MS A1H0700	MS A1H0700
0900	PACKING GLAND	CD/SS	SC A1F0910	SC A1F0910	SC A1H0910	SC A1H0910	SC A1H0910	SC A1H0910	SC A1H0910
1000	STUFFING BOX	CD SS	CC A1F1010 SC A1F1010	CC A1F1010 SC A1F1010	CC A1H1010 SC A1H1010	CC A1H1010 SC A1H1010	CC A1H1010 SC A1H1010	CC A1H1010 SC A1H1010	CC A1H1010 SC A1H1010
1000	SEAL * HOUSING **	CD/SS CD/SS	SC A1F1011 4240835007	SC A1F1011 4240835007	SC A1H1011 4240836007	SC A1H1011 4240836007	SC A1H1011 4240836007	SC A1H1011 4240836007	SC A1H1011 4240836007
1100	SUCTION CHAMBER	CD SS	CC A1G1110 SC A1G1110	CC A1G1110 SC A1G1110	CC A1H1110 SC A1H1110	CC A1H1110 SC A1H1110	CC A1H1110 SC A1H1110	CC A1H1110 SC A1H1110	CC A1H1110 SC A1H1110
1200	STATOR GASKET	Q/R F B	GG A1G1200 GF A1G1200 GB A1G1200	GG A1G1200 GF A1G1200 GB A1G1200	GG A1H1200 GF A1H1200 GB A1H1200	GG A1H1200 GF A1H1200 GB A1H1200	GG A1H1200 GF A1H1200 GB A1H1200	GG A1H1200 GF A1H1200 GB A1H1200	GG A1H1200 GF A1H1200 GB A1H1200
1220	SUCTION CHAM. GASKET	Q/R F B	GG A1F1220 GF A1F1220 GB A1F1220	GG A1F1220 GF A1F1220 GB A1F1220	GG A1H1220 GF A1H1220 GB A1H1220	GG A1H1220 GF A1H1220 GB A1H1220	GG A1H1220 GF A1H1220 GB A1H1220	GG A1H1220 GF A1H1220 GB A1H1220	GG A1H1220 GF A1H1220 GB A1H1220
1240	INSP. PLATE GSKT.	Q/R F B	GG A1G1240 GF A1G1240 GB A1G1240	GG A1G1240 GF A1G1240 GB A1G1240	GG A1H1240 GF A1H1240 GB A1H1240	GG A1H1240 GF A1H1240 GB A1H1240	GG A1H1240 GF A1H1240 GB A1H1240	GG A1H1240 GF A1H1240 GB A1H1240	GG A1H1240 GF A1H1240 GB A1H1240
1400	DISCHARGE FLANGE	CD SS	MS A1G1410 SS A1G1410	MS A1G1410 SS A1G1410	MS A1H1410 SS A1H1410	MS A1H1410 SS A1H1410	MS A1H1410 SS A1H1410	MS A1H1410 SS A1H1410	MS A1H1410 SS A1H1410
1700	STATOR SUPPORT	CD/SS	CC A1G1710	CC A1G1710	CC A1H1710	CC A1H1710	CC A1H1710	CC A1H1710	CC A1H1710
1800	CLAMP RING	CD/SS	MS A1G1810	MS A1G1810	MS A1H1810	MS A1H1810	MS A1H1810	MS A1H1810	MS A1H1810
1900	INSPECTION PLATE	CD SS	MS A1G1900 SS A1G1900	MS A1G1900 SS A1G1900	MS A1H1900 SS A1H1900	MS A1H1900 SS A1H1900	MS A1H1900 SS A1H1900	MS A1H1900 SS A1H1900	MS A1H1900 SS A1H1900
2000	SHAFT PIN	CD/SS	4220489017	4220489017	4220492017	4220492017	4220492017	4220492017	4220492017
2100	INTERMEDIATE SHAFT	CD SS	4250397001 4250397017	4250397001 4250397017	4250398001 4250398017	4250398001 4250398017	4250398001 4250398017	4250398001 4250398017	4250398001 4250398017
2200	SEAL O-RING	Q/R F B	3207902216 3207905216 3207904216	3207902216 3207905216 3207904216	3207902223 3207905223 3207904223	3207902223 3207905223 3207904223	3207902223 3207905223 3207904223	3207902223 3207905223 3207904223	3207902223 3207905223 3207904223
5000	ROTOR	CD SS	TS A1G5000 SS A1G5000	TS A2G5000 SS A2G5000	TS A1H5000 SS A1H5000	AS A2H5000 SS A2H5000	AS A1H5000 SS A1J5000	AS A2H5000 SS A2J5000	AS A1K5000 SS A1K5000
6000	DRIVE SHAFT	CD SS	AS A1G6000 SS A1G6000	AS A1G6000 SS A1G6000	AS A1H6000 SS A1H6000	AS A1H6000 SS A1H6000	AS A1H6000 SS A1H6000	AS A1H6000 SS A1H6000	AS A1H6000 SS A1H6000
6000	DRIVE SHAFT (2-PIECE OPTION)	CD SS	4250380001 4250380015	4250380001 4250380015	4250381001 4250381001	4250381001 4250381001	4250381001 4250381001	4250381001 4250381001	4250381001 4250381001
6100	RETAINING RING	CD/SS	ST A1G6100	ST A1G6100	ST A1H6100	ST A1H6100	ST A1H6100	ST A1H6100	ST A1H6100
6200	CONNECTING ROD	CD SS	AS A1G6200 SS A1G6200	AS A1G6200 SS A1G6200	AS A1H6200 SS A1H6200	AS A1H6200 SS A1H6200	AS A1H6200 SS A1H6200	AS A1H6200 SS A1H6200	AS A1H6200 SS A1H6200
6300	DRIVE PIN	CD/SS	TR A1G6300	TR A1G6300	TR A1H6300	TR A1H6300	TR A1H6300	TR A1H6300	TR A1H6300
6400	JOINT SEAL	Q/R F/B	RD A1G6400 RF A1G6400	RD A1G6400 RF A1G6400	RD A1H6400 RF A1H6400	RD A1H6400 RF A1H6400	RD A1H6400 RF A1H6400	RD A1H6400 RF A1H6400	RD A1H6400 RF A1H6400
6500	STATOR	Q R F B	RQ A1G6510 RR A1G6510 RF A1G6510 RB A1G6510	RQ A2G6510 RR A2G6510 RF A2G6510 RB A2G6510	RQ A1H6510 RR A1H6510 RF A1H6510 RB A1H6510	RQ A2H6510 RR A2H6510 RF A2H6510 RB A2H6510	RQ A1J6510 RR A1J6510 RF A1J6510 RB A1J6510	RQ A2J6510 RR A2J6510 RF A2J6510 RB A2J6510	RQ A1K6510 RR A1K6510 RF A1K6510 RB A1K6510
6700	BEARING SHIMS	CD/SS	GP A1F6700	GP A1F6700	GP A1H6700	GP A1H6700	GP A1H6700	GP A1H6700	GP A1H6700
6800	SLINGER RING	CD/SS	RZ A1F6800	RZ A1F6800	RZ A1H6800	RZ A1H6800	RZ A1H6800	RZ A1H6800	RZ A1H6800
6800	SLINGER/PIN RETNR (2-PIECE OPTION)	CD/SS	4230530000	4230530000	4230531000	4230531000	4230531000	4230531000	4230531000
6850	LANTERN RING	CD/SS	GR A1F6850	GR A1F6850	GR A1H6850	GR A1H6850	GR A1H6850	GR A1H6850	GR A1H6850
6900	PACKING	STD. PTFE	PC A1F6901 3403655003	PC A1F6901 3403655003	PC A1H6901 3403655004	PC A1H6901 3403655004	PC A1H6901 3403655004	PC A1H6901 3403655004	PC A1H6901 3403655004
7000	NAME PLATE	CD/SS	GA A1F7000	GA A1F7000	GA A1F7000	GA A1F7000	GA A1F7000	GA A1F7000	GA A1F7000
K	O-RING	Q/R F/B	CA197 CF197	CA197 CF197	CA228 CF228	CA228 CF228	CA228 CF228	CA228 CF228	CA228 CF228
J	SNAP RING	CD SS	EB045 EB545	EB045 EB545	EB049 EB549	EB049 EB549	EB049 EB549	EB049 EB549	EB049 EB549
R	STATOR RING	CD/SS	EC060	EC060	EC065	EC065	EC065	EC065	EC065

*FRICTION DRIVEN SEAL, TYPE 43 OR EQUAL
**POSITIVE DRIVE SEAL, TYPE 680 OR EQUAL
NOTE: CONTACT FACTORY FOR REPLACEMENT MECHANICAL SEAL PART NUMBERS

PARTS LIST (Cont.)

REF.	DESCRIPTION	TYPE	PUMP B2A PART NO.	PUMP B4A PART NO.	PUMP B1B PART NO.	PUMP B2B PART NO.	PUMP B4B PART NO.	PUMP B1C PART NO.
0100	DRIVE ADAPTOR	CD/SS	CC B2A0100	CC B2A0100	CC B2A0100	CC B2A0100	CC B1D0100	CC B2A0100
0900	PACKING GLAND	CD/SS	SC A2A0910	SC A2A0910	SC A2A0910	SC A2A0910	SC A1D0910	SC A2A0910
1000	STUFFING BOX	CD SS	CC A2A1010 SC A2A1010	CC A2A1010 SC A2A1010	CC A2A1010 SC A2A1010	CC A2A1010 SC A2A1010	CC A1D1010 SC A1D1010	CC A2A1010 SC A2A1010
1000	SEAL * HOUSING **	CD/SS CD/SS	SC A2A1011 4240833007	SC A2A1011 4240833007	SC A2A1011 4240833007	SC A2A1011 4240833007	SC A2A1011 4240833007	SC A2A1011 4240833007
1100	SUCTION CHAMBER	CD SS	CC A2A1110 SC A2A1110	CC A1C1110 SC A1C1110	CC A1B1110 SC A1B1110	CC A1B1110 SC A1B1110	CC A1D1110 SC A1D1110	CC A1C1110 SC A1C1110
1200	STATOR GASKET	Q/R F B	GG A2A1200 GF A2A1200 GB A2A1200	GG A2A1200 GF A2A1200 GB A2A1200	GG A1B1200 GF A1B1200 GB A1B1200	GG A1B1200 GF A1B1200 GB A1B1200	GG A1B1200 GF A1B1200 GB A1B1200	GG A1C1200 GF A1C1200 GB A1C1200
1210	STATOR ADAPTOR GSKT.	Q/R F B		GG A1C1200 GF A1C1200 GB A1C1200			GG A1D1200 GF A1D1200 GB A1D1200	
1220	SUCTION CHAM. GASKET	Q/R F B	GG A2A1220 GF A2A1220 GB A2A1220	GG A2A1220 GF A2A1220 GB A2A1220	GG A2A1220 GF A2A1220 GB A2A1220	GG A2A1220 GF A2A1220 GB A2A1220	GG A1D1220 GF A1D1220 GB A1D1220	GG A2A1220 GF A2A1220 GB A2A1220
1400	DISCHARGE FLANGE	CD SS	MS A2A1410 SS A2A1410	MS A4A1410 SS A4A1410	MS A1B1410 SS A1B1410	MS A1B1410 SS A1B1410	MS A4B1410 SS A4B1410	MS A1C1410 SS A1C1410
1500	STATOR ADAPTOR	CD SS		MS A4A1510 SS A4A1510			MS A4B1510 SS A4B1510	
1600	LOCKING RING	CD/SS	MT B2A1600	MT B2A1600	MT B2A1600	MT B2A1600	MT B1D1600	MT B2A1600
1700	STATOR SUPPORT	CD/SS	MS A2A1710	MS A4A1710	MS A2A1710	MS A2A1710	CC A4B1710	MS A1C1710
1800	CLAMP RING	CD/SS CD/SS	MS A2A1810	MS A4A1810 MS A4A1811	MS A1B1810	MS A1B1810	MS A4B1810 MS A4B1811	MS A1C1810
5000	ROTOR	CD SS	TS A2A5000 SS A2A5000	TS A4A5000 SS A4A5000	TS A1B5000 SS A1B5000	TS A2B5000 SS A2B5000	TS A4B5000 SS A4B5000	TS A1C5000 SS A1C5000
6000	DRIVE SHAFT	CD SS	AS B2A6000 SS B2A6000	AS B1C6000 SS B1C6000	AS B2A6000 SS B2A6000	AS B2A6000 SS B2A6000	AS B1D6000 SS B1D6000	AS B1C6000 SS B1C6000
6100	RETAINING RING	CD/SS	ST A2A6100	ST A1C6100	ST A2A6100	ST A2A6100	ST A1D6100	ST A1C6100
6200	CONNECTING ROD	CD SS	AS A2A6200 AS A2A6200	AS A1C6200 AS A1C6200	AS A2A6200 AS A2A6200	AS A2A6200 AS A2A6200	AS A1D6200 AS A1D6200	AS A1C6200 AS A1C6200
6300	DRIVE PIN	CD/SS	TR A2A6300	TR A1C6300	TR A2A6300	TR A2A6300	TR A1D6300	TR A1C6300
6400	JOINT SEAL	Q/R F/B	RD A2A6400 RF A2A6400	RD A1C6400 RF A1C6400	RD A2A6400 RF A2A6400	RD A2A6400 RF A2A6400	RD A1D6400 RF A1D6400	RD A1C6400 RF A1C6400
6500	STATOR	Q R F B	RQ A2A6510 RR A2A6510 RF A2A6510 RB A2A6510	RQ A4A6510 RR A4A6510 RF A4A6510 RB A4A6510	RQ A1B6510 RR A1B6510 RF A1B6510 RB A1B6510	RQ A2B6510 RR A2B6510 RF A2B6510 RB A2B6510	RQ A4B6510 RR A4B6510 RF A4B6510 RB A4B6510	RQ A1C6510 RR A1C6510 RF A1C6510 RB A1C6510
6800	SLINGER RING	CD/SS	RZ A2A6800	RZ A2A6800	RZ A2A6800	RZ A2A6800	RZ A1D6800	RZ A2A6800
6850	LANTERN RING	CD/SS	GR A2A6850	GR A2A6850	GR A2A6850	GR A2A6850	GR A1D6850	GR A2A6850
6900	PACKING	STD. PTFE	PC A2A6901 3403655001	PC A2A6901 3403655001	PC A2A6901 3403655001	PC A2A6901 3403655001	PC A1D6901 3403655002	PC A2A6901 3403655001
7000	NAME PLATE	CD/SS	GA B2A7000	GA B2A7000	GA B2A7000	GA B2A7000	GA B2A7000	GA B2A7000
K	O-RING	Q/R F/B	CA137 CF137	CA141 CF141	CA137 CF137	CA137 CF137	CA145 CF145	CA141 CF141
J	SNAP RING	CD SS	EB007 EB507	EB015 EB515	EB007 EB507	EB007 EB507	EB020 EB520	EB015 EB515
R	STATOR RING	CD/SS	EC022	EC022	EC028	EC028	EC028	EC034

*FRICTION DRIVEN SEAL, TYPE 43 OR EQUAL
**POSITIVE DRIVE SEAL, TYPE 680 OR EQUAL
NOTE: CONTACT FACTORY FOR REPLACEMENT MECHANICAL SEAL PART NUMBERS

PARTS LIST (Cont.)

REF.	DESCRIPTION	TYPE	PUMP B2C PART NO.	PUMP B4C PART NO.	PUMP B1D PART NO.	PUMP B2D PART NO.	PUMP B4D PART NO.	PUMP B1E PART NO.
0100	DRIVE ADAPTOR	CD/SS	CC B2A0100	CC B1D0100	CC B1D0100	CC B1D0100	CC B1F0100	CC B1D0100
0900	PACKING GLAND	CD/SS	SC A2A0910	SC A1D0910	SC A1D0910	SC A1D0910	SC A1F0910	SC A1D0910
1000	STUFFING BOX	CD SS	CC A2A1010 SC A2A1010	CC A1D1010 SC A1D1010	CC A1D1010 SC A1D1010	CC A1D1010 SC A1D1010	CC A1F1010 SC A1F1010	CC A1D1010 SC A1D1010
1000	SEAL *	CD/SS	SC A2A1011	SC A1D1011	SC A1D1011	SC A1D1011	SC A1F1011	SC A1D1011
	HOUSING **	CD/SS	4240833007	4240834007	4240834007	4240834007	4240835007	4240834007
1100	SUCTION CHAMBER	CD SS	CC A1C1110 SC A1C1110	CC A1E1110 SC A1E1000	CC A1D1110 SC A1D1110	CC A1D1110 SC A1D1110	CC A1F1110 SC A1F1110	CC A1E1110 SC A1E1110
1200	STATOR GASKET	Q/R F B	GG A1C1200 GF A1C1200 GB A1C1200	GG A1C1200 GF A1C1200 GB A1C1200	GG A1D1200 GF A1D1200 GB A1D1200	GG A1D1200 GF A1D1200 GB A1D1200	GG A1D1200 GF A1D1200 GB A1D1200	GG A1E1200 GF A1E1200 GB A1E1200
1210	STATOR ADAPTOR GSKT.	Q/R F B		GG A1E1200 GF A1E1200 GB A1E1200			GG A1F1200 GF A1F1200 GB A1F1200	
1220	SUCTION CHAM. GASKET	Q/R F B	GG A2A1220 GF A2A1220 GB A2A1220	GG A1D1220 GF A1D1220 GB A1D1220	GG A1D1220 GF A1D1220 GB A1D1220	GG A1D1220 GF A1D1220 GB A1D1220	GG A1F1220 GF A1F1220 GB A1F1220	GG A1D1220 GF A1D1220 GB A1D1220
1240	INSPT. PLATE GSKT.	Q/R F B						GG A1E1240 GF A1E1240 GB A1E1240
1400	DISCHARGE FLANGE	CD SS	MS A1C1410 SS A1C1410	MS A4C1410 SS A45C1410	MS A1D1410 SS A1D1410	MS A1D1410 SS A1D1410	MS A4D1410 SS A4D1410	MS A1E1410 SS A1E1410
1500	STATOR ADAPTOR	CD SS		MS A4C1510 SS A4C1510			MS A4D1510 SS A4D1510	
1600	LOCKING RING	CD/SS	MT B2A1600	MT B1D1600	MT B1D1600	MT B1D1600	MT B1F1600	MF B1D1600
1700	STATOR SUPPORT	CD/SS	MS A1C1710	CC A4C1710	CC A1D1710	CC A1D1710	CC A4D1710	CC A1E1710
1800	CLAMP RING	CD/SS CD/SS	MS A1C1810	MS A4C1810 MS A4C1811	MS A1D1810	MS A1D1810	MS A4D1810 MS A4D1811	MS A1E1810
1900	INSPECTION PLATE	CD SS						MS A1E1900 SS A1E1900
5000	ROTOR	CD SS	TS A2C5000 SS A2C5000	TS A4C5000 SS A4C5000	TS A1D5000 SS A1D5000	TS A2D5000 SS A2D5000	TS A4D5000 SS A4D5000	TS A1E5000 SS A1E5000
6000	DRIVE SHAFT	CD SS	AS B1C6000 SS B1C6000	AS B1E6000 AS B1E6000	AS B1D6000 SS B1D6000	AS B1D6000 SS B1D6000	AS B1F6000 SS B1F6000	AS B1E6000 SS B1E6000
6100	RETAINING RING	CD/SS	ST A1C6100	ST A1E6100	ST A1D6100	ST A1D6100	ST A1F6100	ST A1E6100
6200	CONNECTING ROD	CD SS	AS A1C6200 AS A1C6200	AS A1E6200 SS A1E6200	AS A1D6200 AS A1D6200	AS A1D6200 AS A1D6200	AS A1F6200 SS A1F6200	AS A1E6200 SS A1E6200
6300	DRIVE PIN	CD/SS	TR A1C6300	TR A1E6300	TR A1D6300	TR A1D6300	TR A1F6300	TR A1E6300
6400	JOINT SEAL	Q/R F/B	RD A1C6400 RF A1C6400	RD A1E6400 RF A1E6400	RD A1D6400 RF A1D6400	RD A1D6400 RF A1D6400	RD A1F6400 RF A1F6400	RD A1E6400 RF A1E6400
6500	STATOR	Q R F B	RQ A2C6510 RR A2C6510 RF A2C6510 RB A2C6510	RQ A4C6510 RR A4C6510 RF A4C6510 RB A4C6510	RQ A1D6510 RR A1D6510 RF A1D6510 RB A1D6510	RQ A2D6510 RR A2D6510 RF A2D6510 RB A2D6510	RQ A4D6510 RR A4D6510 RF A4D6510 RB A4D6510	RQ A1E6510 RR A1E6510 RF A1E6510 RB A1E6510
6800	SLINGER RING	CD/SS	RZ A2A6800	RZ A1D6800	RZ A1D6800	RZ A1D6800	RZ A1F6800	RZ A1D6800
6850	LANTERN RING	CD/SS	GR A2A6850	GR A1D6850	GR A1D6850	GR A1D6850	GR A1F6850	GR A1D6850
6900	PACKING	STD. PTFE	PC A2A6901 3403655001	PC A1D6901 3403655002	PC A1D6901 3403655002	PC A1D6901 3403655002	PC A1F6901 3403655003	PC A1F6901 3403655002
7000	NAME PLATE	CD/SS	GA B2A7000	GA B2A7000	GA B2A7000	GA B2A7000	GA B2A7000	GA B2A7000
K	O-RING	Q/R F/B	CA141 CF141	CA175 CF175	CA145 CF145	CA145 CF145	CA188 CF188	CA175 CF175
J	SNAP RING	CD SS	EB015 EB515	EB027 EB527	EB020 EB520	EB020 EB520	EB036 EB536	EB027 EB527
R	STATOR RING	CD/SS	EC034	EC034	EC039	EC039	EC039	EC046

*FRICTION DRIVEN SEAL, TYPE 43 OR EQUAL
**POSITIVE DRIVE SEAL, TYPE 680 OR EQUAL
NOTE: CONTACT FACTORY FOR REPLACEMENT MECHANICAL SEAL PART NUMBERS

PARTS LIST (Cont.)

REF.	DESCRIPTION		TYPE	PUMP B2E PART NO.	PUMP B4E PART NO.	PUMP B1F PART NO.	PUMP B2F PART NO.	PUMP B1G PART NO.
0100	DRIVE ADAPTOR		CD/SS	CC B1D0100	CC B1F0100	CC B1F0100	CC B1F0100	CC B1F0100
0900	PACKING GLAND		CD/SS	SC A1D0910	SC A1F0910	SC A1F0910	SC A1F0910	SC A1F0910
1000	STUFFING BOX		CD SS	CC A1D1010 SC A1D1010	CC A1F1010 SC A1F1010	CC A1F1010 SC A1F1010	CC A1F1010 SC A1F1010	CC A1F1010 SC A1F1010
1000	SEAL	*	CD/SS	SC A1D1011	SC A1F1011	SC A1F1011	SC A1F1011	SC A1F1011
	HOUSING	**	CD/SS	4240834007	4240835007	4240835007	4240835007	4240835007
1100	SUCTION CHAMBER		CD SS	CC A1E1110 SC A1E1110	CC A1G1110 SC A1G1110	CC A1F1110 SC A1F1110	CC A1F1110 SC A1F1110	CC A1G1110 SC A1G1110
1200	STATOR GASKET		Q/R F B	GG A1E1200 GF A1E1200 GB A1E1200	GG A1E1200 GF A1E1200 GB A1E1200	GG A1F1200 GF A1F1200 GB A1F1200	GG A1F1200 GF A1F1200 GB A1F1200	GG A1G1200 GF A1G1200 GB A1G1200
1210	STATOR ADAPTOR GSKT.		Q/R F B		GG A1G1200 GF A1G1200 GB A1G1200			
1220	SUCTION CHAM. GASKET		Q/R F B	GG A1D1220 GF A1D1220 GB A1D1220	GG A1F1220 GF A1F1220 GB A1F1220	GG A1F1220 GF A1F1220 GB A1F1220	GG A1F1220 GF A1F1220 GB A1F1220	GG A1F1220 GF A1F1220 GB A1F1220
1240	INSP. PLATE GSKT.		Q/R F BA	GG A1E1240 GF A1E1240 GB A1E1240	GG A1G1240 GF A1G1240 GB A1G1240	GG A1F1240 GF A1F1240 GB A1F1240	GG A1F1240 GF A1F1240 GB A1F1240	GG A1G1240 GF A1G1240 GB A1G1240
1400	DISCHARGE FLANGE		CD SS	MS A1E1410 SS A1E1410	MS A4E1410 SS A4E1410	MS A1F1410 SS A1F1410	MS A1F1410 SS A1F1410	MS A1G1410 SS A1G1410
1500	STATOR ADAPTOR		CD SS		MS A4E1510 SS A4E1510			
1600	LOCKING RING		CD/SS	MT B1D1600	MT B1F1600	MT B1F1600	MT B1F1600	MT B1F1600
1700	STATOR SUPPORT		CD/SS	CC A1E1710	CC A4E1710	CC A1F1710	CC A1F1710	CC A1G1710
1800	CLAMP RING		CD/SS CD/SS	MS A1E1810	MS A4E1810 MS A4E1811	MS A1F1810	MS A1F1810	MS A1G1810
1900	INSPECTION PLATE		CD SS	MS A1E1900 SS A1E1900	MS A1G1900 SS A1G1900	MS A1F1900 SS A1F1900	MS A1F1900 SS A1F1900	MS A1G1900 SS A1G1900
5000	ROTOR		CD SS	TS A2E5000 SS A2E5000	TS A4E5000 SS A4E5000	TS A1F5000 SS A1F5000	TS A2F5000 SS A2F5000	TS A1G5000 SS A1G5000
6000	DRIVE SHAFT		CD SS	AS B1E6000 SS B1E6000	AS B1G6000 SS B1G6000	AS B1F6000 SS B1F6000	AS B1F6000 SS B1F6000	AS B1G6000 SS B1G6000
6100	RETAINING RING		CD/SS	ST A1E6100	ST A1G6100	ST A1F6100	ST A1F6100	ST A1G6100
6200	CONNECTING ROD		CD SS	AS A1E6200 SS A1E6200	AS A1G6200 SS A1G6200	AS A1F6200 SS A1F6200	AS A1F6200 SS A1F6200	AS A1G6200 SS A1G6200
6300	DRIVE PIN		CD/SS	TR A1E6300	TR A1G6300	TR A1F6300	TR A1F6300	TR A1G6300
6400	JOINT SEAL		Q/R F/B	RD A1E6400 RF A1E6400	RD A1G6400 RF A1G6400	RD A1F6400 RF A1F6400	RD A1F6400 RF A1F6400	RD A1G6400 RF A1G6400
6500	STATOR		Q R F B	RQ A2E6510 RR A2E6510 RF A2E6510 RB A2E6510	RQ A4E6510 RR A4E6510 RF A4E6510 RB A4E6510	RQ A1F6510 RR A1F6510 RF A1F6510 RB A1F6510	RQ A2F6510 RR A2F6510 RF A2F6510 RB A2F6510	RQ A1G6510 RR A1G6510 RF A1G6510 RB A1G6510
6800	SLINGER RING		CD/SS	RZ A1D6800	RZ A1F6800	RZ A1F6800	RZ A1F6800	RZ A1F6800
6850	LANTERN RING		CD/SS	GR A1D6850	GR A1F6850	GR A1F6850	GR A1F6850	GR A1F6850
6900	PACKING		STD. PTFE	PC A1D6901 3403655002	PC A1F6901 3403655003	PC A1F6901 3403655003	PC A1D6901 3403655003	PC A1F6901 3403655003
7000	NAME PLATE		CD/SS	GA B2A7000	GA B2A7000	GA B2A7000	GA B2A7000	GA B2A7000
K	O-RING		Q/R F/B	CA175 CF175	CA197 CF197	CA188 CF188	CA188 CF188	CA197 CF197
J	SNAP RING		CD SS	EB027 EB527	EB045 EB545	EB036 EB536	EB036 EB536	EB045 EB545
R	STATOR RING		CD/SS	EC046	EC046	EC055	EC055	EC060

*FRICTION DRIVEN SEAL, TYPE 43 OR EQUAL
**POSITIVE DRIVE SEAL, TYPE 680 OR EQUAL
NOTE: CONTACT FACTORY FOR REPLACEMENT MECHANICAL SEAL PART NUMBERS

PARTS LIST (Cont.)

REF.	DESCRIPTION		TYPE	PUMP C1E PART NO.	PUMP C2E PART NO.	PUMP C1F PART NO.	PUMP C2F PART NO.	PUMP C1G PART NO.
0100	BEARING HOUSING		CD/SS	CC A1D0110	CC A1D0110	CC A1F0110	CC A1F0110	CC A1F0110
0300	BEARING COVER		CD/SS	CC A1D0300	CC A1D0300	CC A1F0300	CC A1F0300	CC A1F0300
0500	GREASE RETAINER		CD/SS	MS A1D0500	MS A1D0500	MS A1F0500	MS A1F0500	MS A1F0500
0700	GREASE SEAL HSG.		CD/SS	MS A1D0700	MS A1D0700	MS A1F0700	MS A1F0700	MS A1F0700
0900	PACKING GLAND		CD/SS	SC A1D0910	SC A1D0910	SC A1F0910	SC A1F0910	SC A1F0910
1000	STUFFING BOX		CD SS	CC A1D1010 SC A1D1010	CC A1D1010 SC A1D1010	CC A1F1010 SC A1F1010	CC A1F1010 SC A1F1010	CC A1F1010 SC A1F1010
1000	SEAL HOUSING	* **	CD/SS CD/SS	SC A1D1011 4240834007	SC A1D1011 4240834007	SC A1F1011 4240835007	SC A1F1011 4240835007	SC A1F1011 4240835007
1100	SUCTION CHAMBER		CD SS	CC C1E1110 SC C1E1110	CC C1E1110 SC C1E1110	CC C1F1110 SC C1F1110	CC C1F1110 SC C1F1110	CC C1G1110 SC C1G1110
1200	STATOR GASKET		Q/R F B	GG A1E1200 GF A1E1200 GB A1E1200	GG A1E1200 GF A1E1200 GB A1E1200	GG A1F1200 GF A1F1200 GB A1F1200	GG A1F1200 GF A1F1200 GB A1F1200	GG A1G1200 GF A1G1200 GB A1G1200
1220	SUCTION CHAM. GASKET		Q/R F B	GG A1D1220 GF A1D1220 GB A1D1220	GG A1D1220 GF A1D1220 GB A1D1220	GG A1F1220 GF A1F1220 GB A1F1220	GG A1F1220 GF A1F1220 GB A1F1220	GG A1F1220 GF A1F1220 GB A1F1220
1400	DISCHARGE FLANGE		CD SS	MS A1E1410 SS A1E1410	MS A1E1410 SS A1E1410	MS A1F1410 SS A1F1410	MS A1F1410 SS A1F1410	MS A1G1410 SS A1G1410
1700	STATOR SUPPORT		CD/SS	CC A1E1710	CC A1E1710	CC A1F1710	CC A1F1710	CC A1G1710
1800	CLAMP RING		CD/SS	MS A1E1810	MS A1E1810	MS A1F1810	MS A1F1810	MS A1G1810
2000	SHAFT PIN		CD/SS	4220488017	4220488017	4220489017	4220489017	4220489017
2100	INTERMEDIATE SHAFT		CD SS	4250395001 4250395017	4250395001 4250395017	4250396001 4250396017	4250396001 4250396017	4250397001 4250397017
2200	SEAL O-RING		Q/R F B	3207902210 3207905210 3207904210	3207902210 3207905210 3207904210	3207902216 3207905216 3207904216	3207902216 3207905216 3207904216	3207902216 3207905216 3207904216
5000	ROTOR		CD SS	TS A1E5000 SS A1E5000	TS A2E5000 SS A2E5000	TS A1F5000 SS A1F5000	TS A2F5000 SS A2F5000	TS A1G5000 SS A1G5000
6000	DRIVE SHAFT		CD SS	AS A1E6000 SS A1E6000	AS A1E6000 SS A1E6000	AS A1F6000 SS A1F6000	AS A1F6000 SS A1F6000	AS A1G6000 SS A1G6000
6000	DRIVE SHAFT (2-PIECE OPTION)		CD SS	4250379001 4250379015	4250379001 4250379015	4250380001 4250380015	4250380001 4250380015	4250380001 4250380015
6100	RETAINING RING		CD/SS	ST A1E6100	ST A1E6100	ST A1F6100	ST A1F6100	SG A1G6100
6200	CONNECTING ROD		CD SS	AS C1E6200 SS C1E6200	AS C1E6200 SS C1E6200	AS C1F6200 SS C1F6200	AS C1F6200 SS C1F6200	AS C1G6200 SS C1G6200
6300	DRIVE PIN		CD/SS	TR A1E6300	TR A1E6300	TR A1F6300	TR A1F6300	TR A1G6300
6400	JOINT SEAL		Q/R F/B	RD A1E6400 RF A1E6400	RD A1E6400 RF A1E6400	RD A1F6400 RF A1F6400	RD A1F6400 RF A1F6400	RD A1G6400 RF A1G6400
6500	STATOR		Q R F B	RQ A1E6510 RR A1E6510 RF A1E6510 RB A1E6510	RQ A2E6510 RR A2E6510 RF A2E6510 RB A2E6510	RQ A1F6510 RR A1F6510 RF A1F6510 RB A1F6510	RQ A2F6510 RR A2F6510 RF A2F6510 RB A2F6510	RQ A1G6510 RR A1G6510 RF A1G6510 RB A1G6510
6700	BEARING SHIMS		CD/SS	GP A1D6700	GP A1D6700	GP A1F6700	GP A1F6700	GP A1F6700
6800	SLINGER RING		CD/SS	RZ A1D6800	RZ A1D6800	RZ A1F6800	RZ A1F6800	RZ A1F6800
6800	SLINGER/PIN RETNR. (2-PIECE OPTION)		CD/SS	4230529000	4230530000	4230530000	4230530000	4230530000
6850	LANTERN RING		CD/SS	GR A1D6850	GR A1D6850	GR A1F6850	GR A1F6850	GR A1F6850
6900	PACKING		STD. PTFE	PC A1D6901 3403655002	PC A1D6901 3403655002	PC A1F6901 3403655003	PC A1F6901 3403655003	PC A1F6901 3403655003
7000	NAME PLATE		CD/SS	GA A2A7000	GA A2A7000	GA A1F7000	GA A1F7000	GA A1F7000
K	O-RING		Q/R F/B	CA175 CF175	CA175 CF175	CA188 CF188	CA188 CF188	CA197 CF197
J	SNAP RING		CD SS	EB027 EB527	EB027 EB527	EB036 EB536	EB036 EB536	EB045 EB545
R	STATOR RING		CD/SS	EC046	EC046	EC055	EC055	EC060

*FRICTION DRIVEN SEAL, TYPE 43 OR EQUAL
**POSITIVE DRIVE SEAL, TYPE 680 OR EQUAL
NOTE: CONTACT FACTORY FOR REPLACEMENT MECHANICAL SEAL PART NUMBERS

PARTS LIST (Cont.)

REF.	DESCRIPTION	TYPE	PUMP C2G PART NO.	PUMP C1H PART NO.	PUMP C2H PART NO.	PUMP C1J PART NO.	PUMP C2J PART NO.	PUMP C1K PART NO.
0100	BEARING HOUSING	CD/SS	CC A1F0110	CC A1H0110	CC A1H0110	CC A1H0110	CC A1H0110	CC A1H0110
0300	BEARING COVER	CD/SS	CC A1F0300	CC A1H0300	CC A1H0300	CC A1H0300	CC A1H0300	CC A1H0300
0500	GREASE RETAINER	CD/SS	MS A1F0500	MS A1H0500	MS A1H0500	MS A1H0500	MS A1H0500	MS A1H0500
0700	GREASE SEAL HSG.	CD/SS	MS A1F0700	MS A1H0700	MS A1H0700	MS A1H0700	MS A1H0700	MS A1H0700
0900	PACKING GLAND	CD/SS	SC A1F0910	SC A1H0910	SC A1H0910	SC A1H0910	SC A1H0910	SC A1H0910
1000	STUFFING BOX	CD SS	CC A1F1010 SC A1F1010	CC A1H1010 SC A1H1010	CC A1H1010 SC A1H1010	CC A1H1010 SC A1H1010	CC A1H1010 SC A1H1010	CC A1H1010 SC A1H1010
1000	SEAL HOUSING *	CD/SS	SC A1F1011	SC A1H1011	SC A1H1011	SC A1H1011	SC A1H1011	SC A1H1011
	**	CD/SS	4240835007	4240836007	4240836007	4240836007	4240836007	4240836007
1100	SUCTION CHAMBER	CD SS	CC C1G1110 SC C1G1110	CC C1H1110 SC C1H1110	CC C1H1110 SC C1H1110	CC C1H1110 SC C1H1110	CC C1H1110 SC C1H1110	CC C1H1110 SC C1H1110
1200	STATOR GASKET	Q/R F B	GG A1G1200 GF A1G1200 GB A1G1200	GG A1H1200 GF A1H1200 GB A1H1200	GG A1H1200 GF A1H1200 GB A1H1200	GG A1H1200 GF A1H1200 GB A1H1200	GG A1H1200 GF A1H1200 GB A1H1200	GG A1H1200 GF A1H1200 GB A1H1200
1220	SUCTION CHAM. GASKET	Q/R F B	GG A1F1220 GF A1F1220 GB A1F1220	GG A1H1220 GF A1H1220 GB A1H1220	GG A1H1220 GF A1H1220 GB A1H1220	GG A1H1220 GF A1H1220 GB A1H1220	GG A1H1220 GF A1H1220 GB A1H1220	GG A1H1220 GF A1H1220 GB A1H1220
1400	DISCHARGE FLANGE	CD SS	MS A1G1410 SS A1G1410	MS A1H1410 SS A1H1410	MS A1H1410 SS A1H1410	MS A1H1410 SS A1H1410	MS A1H1410 SS A1H1410	MS A1H1410 SS A1H1410
1700	STATOR SUPPORT	CD/SS	CC A1G1710	CC A1H1710	CC A1H1710	CC A1H1710	CC A1H1710	CC A1H1710
1800	CLAMP RING	CD/SS	MS A1G1810	MS A1H1810	MS A1H1810	MS A1H1810	MS A1H1810	MS A1H1810
2000	SHAFT PIN	CD/SS	4220489017	4220492017	4220492017	4220492017	4220492017	4220492017
2100	INTERMEDIATE SHAFT	CD SS	4250397001 4250397017	4250398001 4250398017	4250398001 4250398017	4250398001 4250398017	4250398001 4250398017	4250398001 4250398017
2200	SEAL RING	Q/R F B	3207902216 3207905216 3207904216	3207902223 3207905223 3207904223	3207902223 3207905223 3207904223	3207902223 3207905223 3207904223	3207902223 3207905223 3207904223	3207902223 3207905223 3207904223
5000	ROTOR	CD SS	TS A2G5000 SS A2G5000	TS A1H5000 SS A1H5000	TS A2H5000 SS A2H5000	TS A1J5000 SS A1J5000	TS A2J5000 SS A2J5000	TS A1K5000 SS A1K5000
6000	DRIVE SHAFT	CD SS	AS A1G6000 SS A1G6000	AS A1H6000 SS A1H6000	AS A1H6000 SS A1H6000	AS A1H6000 SS A1H6000	AS A1H6000 SS A1H6000	AS A1H6000 SS A1H6000
6000	DRIVE SHAFT (2-PIECE OPTION)	CD SS	4250380001 4250380015	4250381001 4250381015	4250381001 4250381015	4250381001 4250381015	4250381001 4250381015	4250381001 4250381015
6100	RETAINING RING	CD/SS	ST A1G6100	ST A1H6100	ST A1H6100	ST A1H6100	ST A1H6100	ST A1H6100
6200	CONNECTING ROD	CD SS	AS C1G6200 SS C1G6200	AS C1H6200 SS C1H6200	AS C1H6200 SS C1H6200	AS C1H6200 SS C1H6200	AS C1H6200 SS C1H6200	AS C1H6200 SS C1H6200
6300	DRIVE PIN	CD/SS	TR A1G6300	TR A1H6300	TR A1H6300	TR A1H6300	TR A1H6300	TR A1H6300
6400	JOINT SEAL	Q/R F/B	RD A1G6400 RF A1G6400	RD A1H6400 RF A1H6400	RD A1H6400 RF A1H6400	RD A1H6400 RF A1H6400	RD A1H6400 RF A1H6400	RD A1H6400 RF A1H6400
6500	STATOR	Q R F B	RQ A2G6510 RR A2G6510 RF A2G6510 RB A2G6510	RQ A1H6510 RR A1H6510 RF A1H6510 RB A1H6510	RQ A2H6510 RR A2H6510 RF A2H6510 RB A2H6510	RQ A1J6510 RR A1J6510 RF A1J6510 RB A1J6510	RQ A2J6510 RR A2J6510 RF A2J6510 RB A2J6510	RQ A1K6510 RR A1K6510 RF A1K6510 RB A1K6510
6700	BEARING SHIMS	CD/SS	GP A1F6700	GP A1H6700	GP A1H6700	GP A1H6700	GP A1H6700	GP A1H6700
6800	SLINGER RING	CD/SS	RZ A1F6800	RZ A1H6800	RZ A1H6800	RZ A1H6800	RZ A1H6800	RZ A1H6800
6800	SLINGER/PIN RETNR (2-PIECE OPTION)	CD/SS	4230530000	4230531000	4230531000	4230531000	4230531000	4230531000
6850	LANTERN RING	CD/SS	GR A1F6850	GR A1H6850	GR A1H6850	GR A1H6850	GR A1H6850	GR A1H6850
6900	PACKING	STD. PTFE	PC A1F6901 3403655003	PC A1H6901 3403655004	PC A1H6901 3403655004	PC A1H6901 3403655004	PC A1H6901 3403655004	PC A1H6901 3403655004
7000	NAME PLATE	CD/SS	GA A1F7000	GA A1F7000	GA A1F7000	GA A1F7000	GA A1F7000	GA A1F7000
K	O-RING	Q/R F/B	CA197 CF197	CA228 CF228	CA228 CF228	CA228 CF228	CA228 CF228	CA228 CF228
J	SNAP RING	CD SS	EB045 EB545	EB049 EB549	EB049 EB549	EB049 EB549	EB049 EB549	EB049 EB549
R	STATOR RING	CD/SS	EC060	EC065	EC065	EC065	EC065	EC065

*FRICTION DRIVEN SEAL, TYPE 43 OR EQUAL
**POSITIVE DRIVE SEAL, TYPE 680 OR EQUAL
NOTE: CONTACT FACTORY FOR REPLACEMENT MECHANICAL SEAL PART NUMBERS

PARTS LIST (Cont.)

REF.	DESCRIPTION	TYPE	PUMP D4B PART NO.	PUMP D4C PART NO.	PUMP D4D PART NO.	PUMP D4E PART NO.	PUMP D4F PART NO.	PUMP D4G PART NO.	PUMP D4H PART NO.
0100	BEARING HOUSING	CD/SS	CC A2A0110	CC A2A0110	CC A1D0110	CC A1D0110	CC A1F0110	CC A1F0110	CC A1H0110
0300	BEARING COVER	CD/SS			CC A1D0300	CC A1D0300	CC A1F0300	CC A1F0300	CC A1H0300
0500	GREASE RETAINER	CD/SS			MS A1D0500	MS A1D0500	MS A1F0500	MS A1F0500	MS A1H0500
0700	GREASE SEAL HSG.	CD/SS			MS A1D0700	MS A1D0700	MS A1F0700	MS A1F0700	MS A1H0700
0900	PACKING GLAND	CD/SS	SC A2A0910	SC A2A0910	SC A1D0910	SC A1D0910	SC A1F0910	SC A1F0910	SC A1H0910
1000	STUFFING BOX	CD SS	CC A2A1010 SC A2A1010	CC A2A1010 SC A2A1010	CC A1D1010 SC A1D1010	CC A1D1010 SC A1D1010	CC A1F1010 SC A1F1010	CC A1F1010 SC A1F1010	CC A1H1010 SC A1H1010
1000	SEAL HOUSING *	CD/SS	SC A2A1011	SC A2A1011	SC A1D1011	SC A1D1011	SC A1F1011	SC A1F1011	SC A1H1011
	**	CD/SS	4240833007	4240833007	4240834007	4240834007	4240835007	4240835007	4240836007
1100	SUCTION CHAMBER	CD SS	CC A1B1110 SC A1B1110	CC A1C1110 SC A1C1110	CC A1D1110 SC A1D1110	CC A1E1110 SC A1E1110	CC A1F1110 SC A1F1110	CC A1G1110 SC A1G1110	CC A1H1110 SC A1H1110
1200	STATOR GASKET	Q/R F B	GG A1B1200 GF A1B1200 GB A1B1200	GG A1C1200 GF A1C1200 GB A1C1200	GG A1D1200 GF A1D1200 GB A1D1200	GG A1E1200 GF A1E1200 GB A1E1200	GG A1F1200 GF A1F1200 GB A1F1200	GG A1G1200 GF A1G1200 GB A1G1200	GG A1H1200 GF A1H1200 GB A1H1200
1220	SUCTION CHAM. GASKET	Q/R F B	GG A2A1220 GF A2A1220 GB A2A1220	GG A2A1220 GF A2A1220 GB A2A1220	GG A1D1220 GF A1D1220 GB A1D1220	GG A1D1220 GF A1D1220 GB A1D1220	GG A1F1220 GF A1F1220 GB A1F1220	GG A1F1220 GF A1F1220 GB A1F1220	GG A1H1220 GF A1H1220 GB A1H1220
1240	INSP. PLATE GSKT.	Q/R F B				GG A1E1240 GF A1E1240 GB A1E1240	GG A1F1240 GF A1F1240 GB A1F1240	GG A1G1240 GF A1G1240 GB A1G1240	GG A1H1240 GF A1H1240 GB A1H1240
1400	DISCHARGE FLANGE	CD SS	MS A1B1410 SS A1B1410	MS A1C1410 SS A1C1410	MS A1D1410 SS A1D1410	MS A1E1410 SS A1E1410	MS A1F1410 SS A1F1410	MS A1G1410 SS A1G1410	MS A1H1410 SS A1H1410
1700	STATOR SUPPORT	CD/SS	MS A2A1710	MS A1C1710	CC A1D1710	CC A1E1710	CC A1F1710	CC A1G1710	CC A1H1710
1800	CLAMP RING	CD/SS	MS A1B1810	MS A1C1810	MS A1D1810	MS A1E1810	MS A1F1810	MS A1G1810	MS A1H1810
1900	INSPECTION PLATE	CD SS				MS A1E1900 SS A1E1900	MS A1F1900 SS A1F1900	MS A1G1900 SS A1G1900	MS A1H1900 SS A1H1900
2000	SHAFT PIN	CD/SS	4220487017	4220487017	4220488017	4220488017	4220489017	4220489017	4220489017
2100	INTERMEDIATE SHAFT	CD SS	4250392001 4250392017	4250393001 4250393017	4250394001 4250394017	4250395001 4250395017	4250396001 4250396017	4250397001 4250397017	4250398001 4250398017
2200	SEAL RING	Q/R F B	3207902206 3207905206 3207904206	3207902206 3207905206 3207904206	3207902210 3207905210 3207904210	3207902210 3207905210 3207904210	3207902216 3207905216 3207904216	3207902216 3207905216 3207904216	3207902223 3207905223 3207904223
5000	ROTOR	CD SS	TS D4B5000 SS D4B5000	TS D4C5000 SS D4C5000	TS D4D5000 SS D4D5000	TS D4E5000 SS D4E5000	TS D4F5000 SS D4F5000	TS D4G5000 SS D4G5000	TS D4H5000 SS D4H5000
6000	DRIVE SHAFT	CD SS	AS A2A6000 SS A2A6000	AS A1C6000 SS A1C6000	AS A1D6000 SS A1D6000	AS A1E6000 SS A1E6000	AS A1F6000 SS A1F6000	AS A1G6000 SS A1G6000	AS A1H6000 SS A1H6000
6000	DRIVE SHAFT (2-PIECE OPTION)	CD SS	4250378001 4250378015	4250378001 4250378015	4250379001 4250379015	4250379001 4250379015	4250380001 4250380015	4250380001 4250380015	4250381001 4250381015
6100	RETAINING RING	CD/SS	ST A2A6100	ST A1C6100	ST A1D6100	ST A1E6100	ST A1F6100	ST A1G6100	ST A1H6100
6200	CONNECTING ROD	CD SS	AS A2A6200 AS A2A6200	AS A1C6200 AS A1C6200	AS A1D6200 AS A1D6200	AS A1E6200 SS A1E6200	AS A1F6200 SS A1F6200	AS A1G6200 SS A1G6200	AS A1H6200 SS A1H6200
6300	DRIVE PIN	CD/SS	TR A2A6300	TR A1C6300	TR A1D6300	TR A1E6300	TR A1F6300	TR A1G6300	TR A1H6300
6400	JOINT SEAL	Q/R F/B	RD A2A6400 RF A2A6400	RD A1C6400 RF A1C6400	RD A1D6400 RF A1D6400	RD A1E6400 RF A1E6400	RD A1F6400 RF A1F6400	RD A1G6400 RF A1G6400	RD A1H6400 RF A1H6400
6500	STATOR	Q R F B	RQ A4B6510 RR A4B6510 RF A4B6510 RB A4B6510	RQ A4C6510 RR A4C6510 RF A4C6510 RB A4C6510	RQ A4D6510 RR A4D6510 RF A4D6510 RB A4D6510	RQ A4E6510 RR A4E6510 RF A4E6510 RB A4E6510	RQ A4F6510 RR A4F6510 RF A4F6510 RB A4F6510	RQ A4G6510 RR A4G6510 RF A4G6510 RB A4G6510	RQ A4H6510 RR A4H6510 RF A4H6510 RB A4H6510
6700	BEARING SHIMS	CD/SS			GP A1D6700	GP A1D6700	GP A1F6700	GP A1F6700	GP A1H6700
6800	SLINGER RING	CD/SS	RZ A2A6800	RZ A2A6800	RZ A1D6800	RZ A1D6800	RZ A1F6800	RZ A1F6800	RZ A1H6800
6800	SLINGER/PIN RETNR (2-PIECE OPTION)	CD/SS	4230528000	4230528000	4230529000	4230529000	4230530000	4230530000	4230531000
6850	LANTERN RING	CD/SS	GR A2A6850	GR A2A6850	GR A1D6850	GR A1D6850	GR A1F6850	GR A1F6850	GR A1H6850
6900	PACKING	STD. PTFE	PC A2A6901 3403655001	PC A2A6901 3403655001	PC A1D6901 3403655002	PC A1D6901 3403655002	PC A1F6901 3403655003	PC A1F6901 3403655003	PC A1H6901 3403655004
7000	NAME PLATE	CD/SS	GA A2A7000	GA A2A7000	GA A2A7000	GA A2A7000	GA A1F7000	GA A1F7000	GA A1F7000
K	O-RING	Q/R F/B	CA137 CF137	CA141 CF141	CA145 CF145	CA175 CF175	CA188 CF188	CA197 CF197	CA228 CF228
J	SNAP RING	CD SS	EB007 EB507	EB015 EB515	EB020 EB520	EB027 EB527	EB036 EB536	EB045 EB545	EB049 EB549
R	STATOR RING	CD/SS	EC028	EC034	EC039	EC046	EC055	EC060	EC065

*FRICTION DRIVEN SEAL, TYPE 43 OR EQUAL
**POSITIVE DRIVE SEAL, TYPE 680 OR EQUAL
NOTE: CONTACT FACTORY FOR REPLACEMENT MECHANICAL SEAL PART NUMBERS

PARTS LIST (Cont.)

REF.	DESCRIPTION		TYPE	PUMP E4B PART NO.	PUMP E4C PART NO.	PUMP E4D PART NO.	PUMP E4E PART NO.
0100	DRIVE ADAPTOR		CD/SS	CC B2A0110	CC B2A0110	CC B1D0110	CC B1D0110
0900	PACKING GLAND		CD/SS	SC A2A0910	SC A2A0910	SC A1D0910	SC A1D0910
1000	STUFFING BOX		CD SS	CC A2A1010 SC A2A1010	CC A2A1010 SC A2A1010	CC A1D1010 SC A1D1010	CC A1D1010 SC A1D1010
1000	SEAL HOUSING	* **	CD/SS CD/SS	SC A2A1011 4240833007	SC A2A1011 4240833007	SC A1D1011 4240834007	SC A1D1011 4240834007
1100	SUCTION CHAMBER STD.		CD SS	CC A1B1110 SC A1B1110	CC A1C1110 SC A1C1110	CC A1D1110 SC A1D1110	CC A1E1110 SC A1E1110
1200	STATOR GASKET		Q/R F B	GG A1B1200 GF A1B1200 GB A1B1200	GG A1C1200 GF A1C1200 GB A1C1200	GG A1D1200 GF A1D1200 GB A1D1200	GG A1E1200 GF A1E1200 GB A1E1200
1220	SUCTION CHAM. GASKET		Q/R F B	GG A2A1220 GF A2A1220 GB A2A1220	GG A2A1220 GF A2A1220 GB A2A1220	GG A1D1220 GF A1D1220 GB A1D1220	GG A1D1220 GF A1D1220 GB A1D1220
1240	INSP. PLATE GSKT.		Q/R F B				GG A1E1240 GF A1E1240 GB A1E1240
1400	DISCHARGE FLANGE		CD SS	MS A1B1410 SS A1B1410	MS A1C1410 SS A1C1410	MS A1D1410 SS A1D1410	MS A1E1410 SS A1E1410
1600	LOCKING RING		CD/SS	MT B2A1600	MT B2A1600	MT B1D1600	MT B1D1600
1700	STATOR SUPPORT		CD/SS	MS A2A1710	MS A1C1710	CC A1D1710	CC A1E1710
1800	CLAMP RING		CO/SS	MS A1B1810	MS A1C1810	MS A1D1810	MS A1E1810
1900	INSPECTION PLATE		CD SS				MS A1E1900 SS A1E1900
5000	ROTOR		CD SS	TS D4B5000 SS D4B5000	TS D4C5000 SS D4C5000	TS D4D5000 SS D4D5000	TS D4E5000 SS D4E5000
6000	DRIVE SHAFT		CD SS	AS B2A6000 SS B2A6000	AS B1C6000 SS B1C6000	AS B1D6000 SS B1D6000	AS B1E6000 SS B1E6000
6100	RETAINING RING		CD/SS	ST A2A6100	ST A1C6100	ST A1D6100	ST A1E6100
6200	CONNECTING ROD		CD SS	AS A2A6200 AS A2A6200	AS A1C6200 AS A1C6200	AS A1D6200 AS A1D6200	AS A1E6200 SS A1E6200
6300	DRIVE PIN		CD/SS	TR A2A6300	TR A1C6300	TR A1D6300	TR A1E6300
6400	JOINT SEAL		Q/R F/B	RD A2A6400 RF A2A6400	RD A1C6400 RF A1C6400	RD A1D6400 RF A1D6400	RD A1E6400 RF A1E6400
6500	STATOR		Q R F B	RQ A4B6510 RR A4B6510 RF A4B6510 RB A4B6510	RQ A4C6510 RR A4C6510 RF A4C6510 RB A4C6510	RQ A4D6510 RR A4D6510 RF A4D6510 RB A4D6510	RQ A4E6510 RR A4E6510 RF A4E6510 RB A4E6510
6800	SLINGER RING		CD/SS	RZ A2A6800	RZ A2A6800	RZ A1D6800	RZ A1D6800
6850	LANTERN RING		CD/SS	GR A2A6850	GR A2A6850	GR A1D6850	GR A1D6850
6900	PACKING		STD. PTFE	PC A2A6901 3403655001	PC A2A6901 3403655001	PC A1D6901 3403655002	PC A1D6901 3403655002
7000	NAME PLATE		CD/SS	GA B2A7000	GA B2A7000	GA B2A7000	GA B2A7000
K	O-RING		Q/R F/B	CA137 CF137	CA141 CF141	CA145 CF145	CA175 CF175
J	SNAP RING		CD SS	EB007 EB507	EB015 EB515	EB020 EB520	EB027 EB527
R	STATOR RING		CD/SS	EC028	EC034	EC039	EC046

*FRICTION DRIVEN SEAL, TYPE 43 OR EQUAL
**POSITIVE DRIVE SEAL, TYPE 680 OR EQUAL
NOTE: CONTACT FACTORY FOR REPLACEMENT MECHANICAL SEAL PART NUMBERS

4-49. TROUBLESHOOTING CHART

PUMP PROBLEMS PROBABLE CAUSE AND REMEDY	Pump does not rotate.	Pump does not discharge.	Discharge output low.	Discharge output fluctuates.	Pump drive overloaded.	Pump noisy.	Shaft seal leaks.	Stator wears too fast.	Rotor wears too fast.
Incorrect power supply; drive not properly wired. *Check motor nameplate data; test voltage, phase, and frequency.*					●		●		●
Foreign matter in pump. *Remove foreign matter.*				●	●		●		●
If pump or stator is new, too much static friction. *Fill with liquid, and hand turn.*					●				●
Stator swells due to chemical attack. *Change stator material.*		●			●				●
Stator swells due to high liquid temp. *Reduce liquid temp. or use an undersized rotor.*	●	●			●				●
Blockage due to solids in liquid. *Decrease solids-to-liquid ratio.*		●		●	●	●	●		●
Liquid settles and hardens after pump shut down. *Clean and rinse pump after each use.*	●	●	●	●	●	●	●		●
Suction pipe not submerged. *Reposition suction pipe.*				●		●	●	●	
Air in suction pipe. *Tighten connections to stop leaks.*				●		●	●	●	
Pump speed too low. *Increase drive speed.*							●	●	
Suction lift too high (cavitation). *Reduce suction losses; move pump to lower elevation; increase pipe size.*	●	●		●		●	●	●	
Pump running dry; no prime. *Fill pump with liquid; relocate suction piping.*		●		●	●		●	●	
Stator worn excessively. *Replace stator and inspect rotor.*				●		●	●	●	
Rotor worn excessively. *Replace rotor.*		●		●		●	●	●	
Wrong direction of rotation. *Reverse drive motor polarity.*			●					●	
Discharge pressure too high. *Open discharge valve; reduce discharge pipe length; remove obstruction, increase pipe size.*	●	●			●		●	●	
Suction pipe leaks. *Tighten pipe connections.*				●		●	●		
Shaft packing leaks. *Tighten packing gland; replace packing; lubricate packing.*						●	●		
Stator material brittle. *Replace stator.*	●	●		●			●		
Pump speed too high. *Reduce drive speed.*	●	●		●	●	●			
Liquid viscosity or specific gravity too high. *Measure and compare with specification.*				●	●	●	●	●	●
Packing too tight. *Loosen gland nuts, and lubricate packing.*					●				●
Bent drive shaft. *Replace drive shaft.*				●	●				
Drive and pump misaligned. *Re-align drive and pump.*				●					●
Flexible drive coupling worn. *Repair or replace coupling.*				●					
Drive shaft bearings worn. *Replace bearings.*			●	●					
Incorrect packing. *Change packing material.*			●						
Packing too loose. *Tighten gland nuts, and lubricate.*			●						
Incorrect parts. *If pump has been rebuilt, check to verify original Moyno parts used.*	●	●		●	●	●	●	●	●

NOTE: If [illegible] information is needed, please contact Technical Service at Moyno Industrial Products.

ROBBINS MYERS

Section:
R&M 1000 PUMPS
Date: April 15, 1992

Performance Data

Curve 12.02

Models: A1E, B1E, C1E, A2E B2E, C2E, A4E, B4E D4E, E4E

Use appropriate HP and pressure scales for the number of stages required.

NOTE: Pressure limits rated at 87 psi/ stage (70 Duro.) Some models have additional limits. Please consult Robbins & Myers representative before making final selection.

		RPM	200	400	600	800	1000
NPSH Required – (Ft.)			1.20	2.40	3.56	5.85	8.80
STARTING TORQUE, Minimum Recommended Motor HP*	***152 IN/LB***	1 STG	0.50	0.75	1.00	1.50	2.00
	241 IN/LB	2 STG	0.75	1.00	1.50	2.00	3.00
	425 IN/LB	4 STG	1.00	2.00	3.00	5.00	5.00
Drive End HP		1,2 STG D4E, E4E	0.08	0.16	0.24	0.32	0.40
Must be added to HP value from curve.		A4E, B4E	0.16	0.32	0.48	0.64	0.80

NOTE: D4E & E4E TYPE MODELS ARE 43.5 PSI/STAGE MAX.
*Based on drives supplying 150% starting torque.

Capacity — 70 Durometer Hardness, – – 55 Durometer Hardness.** **Data Based on Water @ 68°F** **Horsepower**

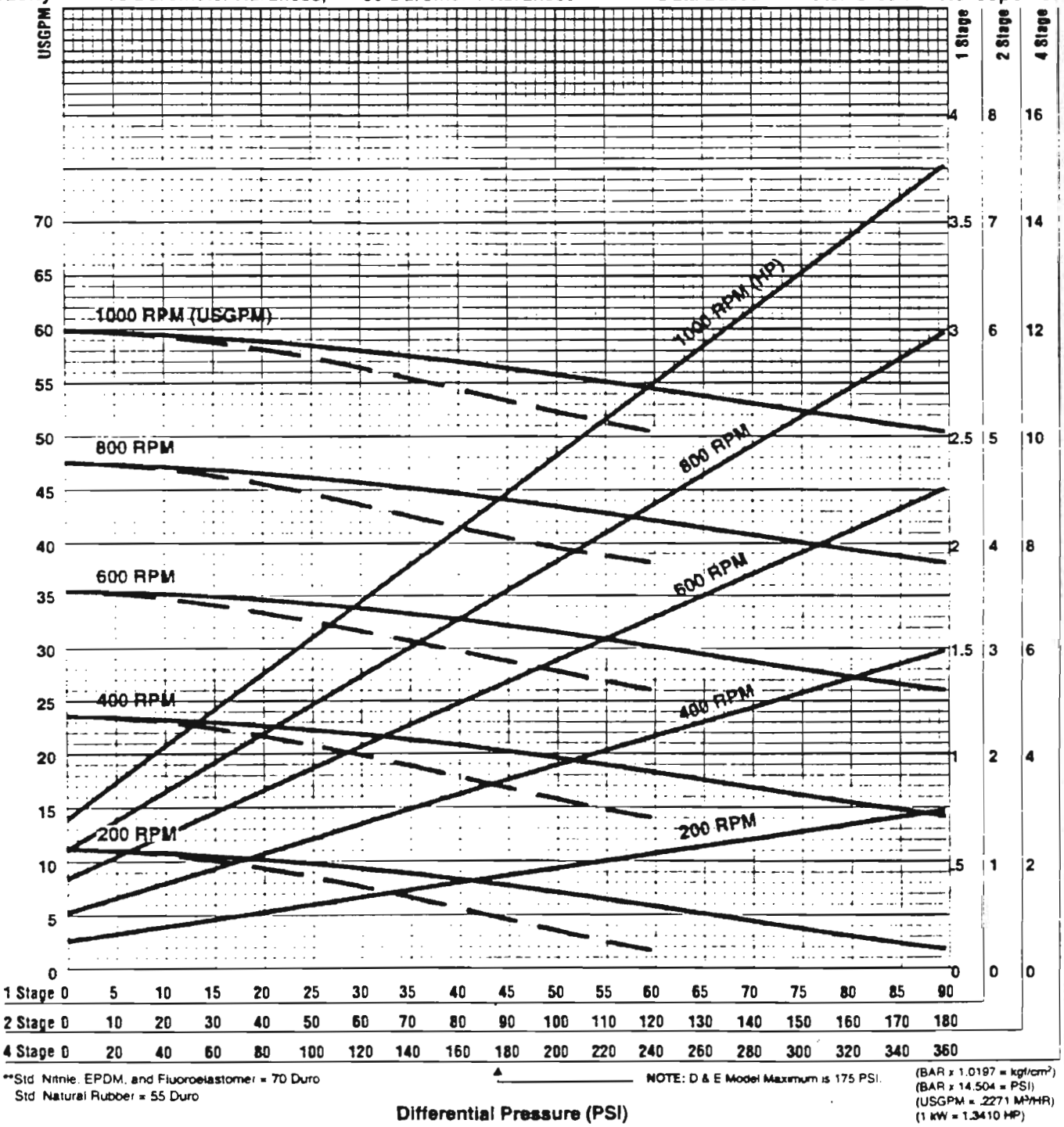

**Std Nitrile, EPDM, and Fluoroelastomer = 70 Duro
Std Natural Rubber = 55 Duro

NOTE: D & E Model Maximum is 175 PSI.

(BAR x 1.0197 = kgf/cm²)
(BAR x 14.504 = PSI)
(USGPM = .2271 M³/HR)
(1 kW = 1.3410 HP)

Models: A1E, B1E, C1E, A2E, B2E, C2E, A4E, B4E, D4E, E4E

POWER ADDITIVES:

Shown below are HP additives for both water base slurries and for viscous materials. To use these tables, first determine which table applies to your product and enter that table with the appropriate characteristics of your product. Determine the HP additive per 100 RPM and multiply it by the speed of your pump divided by 100. Add the resulting figure to the HP for water from the curve on the preceding page and to the minimum HP for starting from the table at the top of the preceding page, and use the higher result.

If your product is a combination of a slurry and viscous material, determine the appropriate HP additive from both tables below and use whichever is greater.

TABLE I — WATER BASE SLURRIES:

HP ADDER/100 RPM

% Solids	Fine 16 Mesh (1.0 mm) (.039")			Medium 16 to 9 Mesh (1.0-2.0 mm) (.039-.078")			Coarse 9 to 4 Mesh (2.0-5.0 mm) (.078-.185")		
	Number of Stages								
	1	2	4	1	2	4	1	2	4
10	.09	.14	.20	.10	.20	.25	.20	.29	.33
30	.29	.40	.50	.40	.49	.69	.60	.79	1.00
50	.60	.80	.89	.69	.89	1.00	1.00	1.19	1.60

TABLE II — VISCOSITY (NEWTONIAN FLUIDS):

HP ADDER/100 RPM/STAGE

Viscosity (Centipoise)						
1	2.500	5.000	10.000	50.000	100.000	150.000
0	.195	.260	.370	.780	1.00	1.25

(It should be noted that because of the wide variation in physical characteristics of many materials, the actual HP additive could result in figures somewhat less than those shown.)

POWER MULTIPLIERS:

For applications which involve temperatures, the table below gives multipliers required for standard size rotors and for undersize rotors. Multiply the minimum HP for starting, by the multiplier for the appropriate rotor size and temperature. Compare to above results and use higher figure.

STATOR MATERIAL	Q, R B F	70°F 70°F 70°F	100°F 108°F 130°F	125°F 140°F 180°F	150°F 170°F 230°F	175°F 200°F 285°F	200°F 232°F 330°F
STANDARD SIZE ROTOR		1.00	1.10	1.30	1.60	2.00	2.50
UNDERSIZE ROTOR		0.75	0.80	0.85	0.95	1.10	1.60

(Thermal expansion has little effect upon the running HP; however as shown in this table, it can have considerable effect upon starting torque.)

© 1992 Robbins & Myers, Inc.

Printed in U.S.A. 5M PPI 492

APPENDIX B

PERMIT APPLICATIONS

OP LOCATION FACILITY EMISSION POINT: [ ][ ][ ][ ][ ][ ][ ][ ][ ][ ][ ][ ][ ][ ][I]

A ADD
C CHANGE
D DELETE

READ INSTRUCTIONS CONTAINED IN FORM 76-11-12 BEFORE ANSWERING ANY QUESTION

NEW YORK STATE
DEPARTMENT OF ENVIRONMENTAL CONSERVATION

COPIES
WHITE - ORIGINAL
GREEN - DIVISON OF AIR
WHITE - REGIONAL OFFICE
WHITE - FIELD REP.
YELLOW - APPLICANT

PROCESS, EXHAUST OR VENTILATION SYSTEM

APPLICATION FOR PERMIT TO CONSTRUCT OR CERTIFICATE TO OPERATE

SECTION A

1. NAME OF OWNER / FIRM: Erdle Perforating Company
2. NUMBER AND STREET ADDRESS: 100 Pixley Industrial Parkway
3. CITY - TOWN - VILLAGE: Rochester | 4. STATE: NY | 5. ZIP: 14603
6. OWNER CLASSIFICATON: A. ☐ COMMERCIAL C. ☐ UTILITY F. ☐ MUNICIPAL I. ☐ RESIDENTIAL; B. ☒ INDUSTRIAL D. ☐ FEDERAL G. ☐ EDUC. INST. J. ☐ OTHER; E. ☐ STATE H. ☐ HOSPITAL
7. NAME & TITLE OF OWNERS REPRESENTATIVE: Mr. Michael Rick — Vice President Engineering | 8. TELEPHONE: (716) 247-4700
9. NAME OF AUTHORIZED AGENT: Radian International LLC | 10. TELEPHONE: (716) 292-1870
11. NUMBER AND STREET ADDRESS: 155 Corporate Woods Suite 100
12. CITY - TOWN - VILLAGE: Rochester | 13. STATE: NY | 14. ZIP: 14623
15. NAME OF P.E. OR ARCHITECT PREPARING APPLICATION: John C. Yackiw | 16. N.Y.S. P.E. OR ARCHITECT LICENSE NO.: 069615 | 17. TELEPHONE: (716) 292-1870
18. SIGNATURE OF OWNERS REPRESENTATIVE OR AGENT WHEN APPLYING FOR A PERMIT TO CONSTRUCT: John C. Yackiw
19. FACILITY NAME (IF DIFFERENT FROM OWNER / FIRM):
20. FACILITY LOCATION (NUMBER AND STREET ADDRESS):
21. CITY - TOWN - VILLAGE | 22. ZIP:
23. BUILDING NAME OR NUMBER: Manufacturing Bldg | 24. FLOOR NAME OR NUMBER: N/A
25. START UP DATE: 4 (MO) / 97 (YR) | 26. DRAWING NUMBERS OF PLANS SUBMITTED:
27. PERMIT TO CONSTRUCT: A. ☐ NEW SOURCE B. ☐ MODIFICATION
28. CERTIFICATE TO OPERATE: A. ☒ NEW SOURCE C. ☐ EXISTING SOURCE B. ☐ MODIFICATION

SECTION B

29. EMISSION POINT ID.	30. GROUND ELEVATION (FT.)	31. HEIGHT ABOVE STRUCTURES (FT.)	32. STACK HEIGHT (FT.)	33. INSIDE DIMENSIONS (IN.)	34. EXIT TEMP.(°F)	35. EXIT VELOCITY (FT./SEC.)	36. EXIT FLOW RATE (ACFM)
ESS01	558 amsl	5 Ft	30 Ft	2"	90	76	105

37. SOURCE CODE	38. HRS / DAY	39. DAYS / YR	40. % OPERATION BY SEASON: Winter	Spring	Summer	Fall
	24	365	25	25	25	25

SECTION C

41. DESCRIBE PROCESS OR UNIT

1. VACUUM STRIPPER
2. Stripped Contaminants absorbed on 2 activated Carbon Beds in Series
3. Carbon Beds will be returned to manufacturer For regeneration
4.
5.
6.
7.
8.

SECTION D

EMISSION CONTROL EQUIPMENT I.D.	CONTROL TYPE	MANUFACTURER'S NAME AND MODEL NUMBER	DISPOSAL METHOD	DATE INSTALLED MONTH / YEAR	USEFUL LIFE
42. 01	43. 17	44. Carbtrol Granular Activated Carbon Bed Model G-6	45. 9	46. 4 / 97	47. 0.5yrs
48.	49.	50.	51.	52. /	53.

SECTION E

CALCULATIONS: SEE ATTACHED PAGES

SECTION F

CONTAMINANT NAME	CAS NUMBER	INPUT OR PRODUCTION	UNIT	ENV. RATING	EMISSIONS: ACTUAL	UNIT	HOW DET.	PERMISSIBLE	% CONTROL EFFIC'CY	HOURLY EMISSIONS (LBS/HR): ERP	ACTUAL	ANNUAL EMISSIONS (LBS/YR): ACTUAL	10^X	PERMISSIBLE
54. Cis-1,2-Dichloroethene	55. 540-59-0	56.	57.	58.	59. Trace	60. 94	61. 6	62.	63. 99.96	64. Trace	65. Trace	66. Trace	67. 0	68.
69. Trichloroethene	70. 79-01-6	71.	72.	73.	74. 0.15	75. 2	76. 6	77.	78. 99.96	79. 7.6×10^{-3}	80. Trace	81. Trace	82. 0	83.
84. Vinyl Chloride	85. 75-01-4	86.	87.	88.	89. Trace	90. 94	91. 6	92.	93. 99.96	94. Trace	95. Trace	96. Trace	97. 0	98.
99.	100.	101.	102.	103.	104.	105.	106.	107.	108.	109.	110.	111.	112.	113.
114.	115.	116.	117.	118.	119.	120.	121.	122.	123.	124.	125.	126.	127.	128.
129.	130.	131.	132.	133.	134.	135.	136.	137.	138.	139.	140.	141.	142.	143.

SECTION G

SOLID FUEL TYPE	SOLID FUEL TONS / YR	SOLID FUEL % S	LIQUID FUEL TYPE	LIQUID FUEL THOUSANDS OF GALLONS/YR	LIQUID FUEL % S	GAS TYPE	GAS THOUSANDS OF CF/YR	GAS BTU/CF
144.	145.	146.	147.	148.	149.	150.	151.	152.

APPLICABLE RULE	APPLICABLE RULE
153.	154.

Upon completion of construction sign the statement listed below and forward to the appropriate field representative

THE PROCESS, EXHAUST OR VENTILATION SYSTEM HAS BEEN CONSTRUCTED AND WILL BE OPERATED IN ACCORDANCE WITH STATED SPECIFICATIONS AND IN CONFORMANCE WITH ALL PROVISIONS OF EXISTING REGULATIONS.

155. SIGNATURE OF AUTHORIZED REPRESENTATIVE OR AGENT | DATE

AGENCY USE ONLY

156. LOCATION CODE	157. FACILITY ID. NO.	158. U.T.M. (E)	159. U.T.M. (N)	160. SIC NUMBER	161. DATE APPL. RECEIVED	162. DATE APPL. REVIEWED	163. REVIEWED BY:
					/ /	/ /	

PERMIT TO CONSTRUCT

164. DATE ISSUED	165. EXPIRATION DATE	166. SIGNATURE OF APPROVAL	167. FEE
/ /	/ /		

168.
1. DEVIATION FROM APPROVED APPLICATION SHALL VOID THIS PERMIT
2. THIS IS NOT A CERTIFICATE TO OPERATE
3. TESTS AND/OR ADDITIONAL EMISSION CONTROL EQUIPMENT MAY BE REQUIRED PRIOR TO THE ISSUANCE OF A CERTIFICATE TO OPERATE

CERTIFICATE TO OPERATE

169. DATE ISSUED	170. EXPIRATION DATE	171. SIGNATURE OF APPROVAL	172. FEE
/ /	/ /		

173.
1. ☐ INSPECTED BY _____ DATE _____
2. ☐ INSPECTION DISCLOSED DIFFERENCES AS BUILT VS. PERMIT, CHANGES INDICATED ON FORM
3. ☐ ISSUE CERTIFICATE TO OPERATE FOR SOURCE AS BUILT
4. ☐ APPLICATION FOR C.O. DENIED _____ (DATE) _____ (INITIALED)

174. SPECIAL CONDITIONS:
1.
2.
3.
4.

AGENCY USE ONLY

APPENDIX B-1

AIR PERMIT APPLICATION
(Originals submitted under separate cover to Mr. David Pratt of NYSDEC)

Mass Calculations for Section F of Air Permitting Form 76-19-3

There are essentially two sources of VOCs being processed through the air-stripper (2-PHASE™) system:

- VOCs stripped from contaminated groundwater, and
- VOCs stripped from contaminated soil.

Each source is dealt with separately below.

VOCs Stripped From Contaminated Groundwater

There are four water streams connected to the 2-PHASE system. The streams have the following concentrations:

	Concentrations of Various Organic Compounds (ug/L)		
	cis-1,2-Dichloroethene	Trichloroethene	Vinyl Chloride
Stream #1	72	420	2,200
Stream #2	ND	550,000	ND
Stream #3	ND	1,000	98
Stream #4	2.6	2.3	18

ND = non-detect

The flow rate of each water stream is 1 U.S. gallon per minute (GPM), or 1440 U.S. gallons per day (GPD).

Assuming the air-stripper performs with 95% efficiency, and all compounds strip at the same rate, the VOC mass transferred from the water stream to the vapor stream will be (assuming a 1 day basis):

	Mass Transferred From Groundwater To Vapor Stream (lbs/day)		
	cis-1,2-Dichloroethene	Trichloroethene	Vinyl Chloride
Stream #1	0.00082	0.00479	0.02511
Stream #2	-	6.27833	-
Stream #3	-	0.01142	0.00112
Stream #4	0.00003	0.00003	0.00021
TOTAL	0.00085	6.29457	0.02644

These numbers were calculated as follows:
Example using Stream #1, cis-1,2-Dichloroethene:

Mass Transferred To Vapor Stream = [concentration of compound in water stream]
* [daily flow rate of water stream]
* [stripping efficiency (0.95)]
* [appropriate unit conversion factors]

= [72 ug/L] * [1440 gallons/day] * [0.95]
* [10^{-6} g/ug] * [0.0022046 lbs/g]
* [3.785 L/gallon]

= 0.00082 lbs/day

<u>VOCs Stripped From Contaminated Soil</u>

Using a mass removal trend curve for a site with similar contaminants and similar geology it is estimated that an additional 2.1 lbs of mass (calculated as cis-1,2-dichloroethane) will be removed per day from the soil. Using the ratios from the groundwater data to apportion this mass among the three compounds detected on site, this translates to

Sample Calculation:
Using trichloroethene:

Converting 2.1lbs cis-1,2-dichloroethene to moles:

n = 2.1 lbs/ (96.94 lbs/lb-mol)
= 0.0217 lb-mol

Calculating moles attributed to trichloroethene (TCE) from contaminated soil vapor:

Mass fraction of TCE in vapor stream = [Mass of TCE Transferred From Groundwater To Vapor Stream (calculated above)] / [Total Mass in Vapor Stream]

= 6.29457 lbs / (0.00085+6.29457+0.02644) lbs

= 0.99568

Number of moles attributed to TCE from contaminated soil = [Total Number of Moles Contributed From Soil] *[Mass Fraction Of TCE] *[Molar Mass Of TCE]

= (0.0217 lb-mol) *(0.99568) *(131.29 lb/lb-mol)

= 2.84 lb TCE

A summary of all results are presented in the tables below.

	VOC Compounds In Vapor Stream		
	cis-1,2-Dichloroethene	Trichloroethene	Vinyl Chloride
Mass Contribution From Groundwater (lbs/day)	0.00085	6.29457	0.02644
Mass Contribution From Soil Vapor (lbs/day)	0.00028	2.8	0.0057
TOTAL MASS IN VAPOR STREAM (lbs/day)	0.0011	9.1	0.032

	VOC Compounds In Vapor Stream		
	cis-1,2-Dichloroethene	Trichloroethene	Vinyl Chloride
Mass Contribution From Groundwater (lbs/hr)	0.000035	0.262274	0.001102
Mass Contribution From Soil Vapor (lbs/hr)	0.000012	0.12	0.00024
TOTAL MASS IN VAPOR STREAM (lbs/hr)	0.000047	0.38	0.0013

The vapor stream will then be sent to two activated carbon units connected in series. For the compounds present in the vapor stream, the removal efficiency of each bed is approximately 98%. Thus, the removal efficiency of two beds in series is 99.96% (1-[0.02*0.02] = 0.9996).

Sample Calculation Using Trichloroethene (TCE):
Content of TCE in vapor stream (estimated above): 9.1 lbs/day
Removal Efficiency: 99.96%

TCE remaining in stream after passing through carbon = [mass of TCE in vapor stream] *[1-(removal efficiency)]

= 9.1 * (1-0.9996)

= 3.6×10^{-3} lbs/day

The concentration of each compound remaining in the vapor stream after carbon treatment is presented in the tables below.

	VOC Compounds In Vapor Stream		
	cis-1,2-Dichloroethene	Trichloroethene	Vinyl Chloride
Mass of VOCs Discharged To Atmosphere After Carbon Treatment (lbs/day)	4.4×10^{-7}	3.6×10^{-3}	1.3×10^{-5}

	VOC Compounds In Vapor Stream		
	cis-1,2-Dichloroethene	Trichloroethene	Vinyl Chloride
Mass of VOCs Discharged To Atmosphere After Carbon Treatment (lbs/hr)	1.9×10^{-8}	1.5×10^{-4}	5.2×10^{-7}

Calculation of Emission Rate Potential (ERP)

ERP calculations are based on the premise that 1 of the carbon beds is fully loaded and that only the second carbon bed is functioning. If this occurs, the mass removal efficiency of the system will drop to 98%.

Sample Calculation Using Trichloroethene (TCE):
Content of TCE in vapor stream (estimated above): 9.1 lbs/hr
Removal Efficiency: 98%

TCE remaining in stream after passing through carbon = [mass of TCE in vapor stream] *[1-(removal efficiency)]

= 9.1 * (1-0.98)

= 0.18 lbs/hr

The concentration of each compound remaining in the vapor stream after carbon treatment is presented in the tables below.

	VOC Compounds In Vapor Stream		
	cis-1,2-Dichloroethene	Trichloroethene	Vinyl Chloride
Mass of VOCs Discharged To Atmosphere After Carbon Treatment (lbs/day)	2.2×10^{-5}	0.18	6.4×10^{-4}

	VOC Compounds In Vapor Stream		
	cis-1,2-Dichloroethene	Trichloroethene	Vinyl Chloride
Mass of VOCs Discharged To Atmosphere After Carbon Treatment (lbs/hr)	9.4×10^{-7}	7.6×10^{-3}	2.6×10^{-5}

Drawing References and Additional Required Information

1. Plot plan is depicted in Design Drawings (drawings C-1 and C-2) and includes:

    a) North orientation and property lines of the facility where installation is located (drawing C-1)

    b) Elevation of emission point above mean sea level is 590 ft. Elevation of emission point above ground level is 30 ft.

    c) Location of all existing and proposed emission points detailed on drawing C-2.

    d) Shortest straight-line distance from stack to (1) property line of the facility where the installation is located is 65 ft, and (2) the nearest building at or beyond the property line is 765 ft and is the State Wide Refrigerated Systems Inc (Industrial).

    e.) Direction of the prevailing winds is depicted in the wind-rose included with the permit. (Reference: National Weather Service, 1992)

2. Description of each process connected to the emission point, including the flow diagram is depicted in the Design Drawings (drawing I-1).

3. Plan and elevation drawings are included in the Design Drawings (drawings M-3 and M-4) and show:

    a) Design, dimensions, and arrangement of all process units, air cleaning devices, and sampling ports.

    b) Details and arrangements of related equipment which affects the performance of the installation.

1992 ROCHESTER, NY

January 1-December 31; Midnight-11 PM

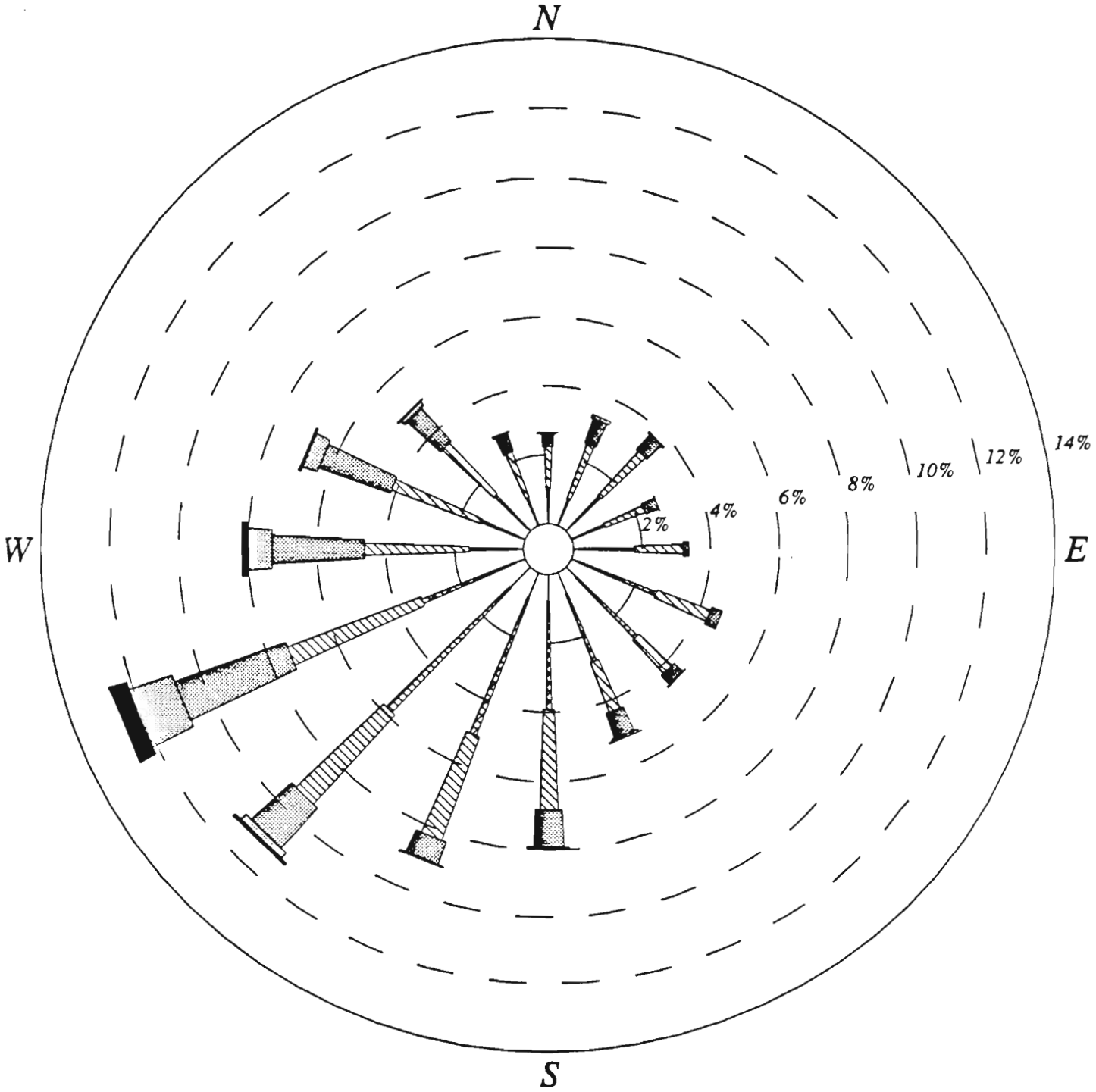

CALM WINDS 5.92%

NOTE: Frequencies indicate direction from which the wind is blowing.

WIND SPEED (KNOTS)

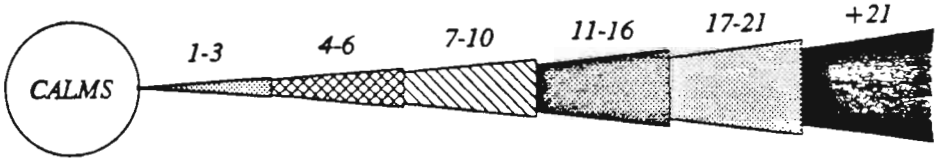

APPENDIX B-2

REQUEST TO DISCHARGE TO MONROE COUNTY PURE WATERS DISTRICT SEWER

ATTACHMENTS to ACCOMPANY APPLICATION

1. A plot or tape location map of the property showing ac curately the size and location of all sewer and drainage connections to the sewerage system, all pretreatment devices and all manholes or other accesible sampling points. Each sewer or drain connection shown on drawing shall be designated by an identification number. The plot or tape location map shall be attached as Exhibit "A".

2. A complete schedule of all process waters and industrial wastes produced or expected to be produced at said property, including a description of each waste, the daily volume and whether the flow is continuous or intermittent. The schedule shall be attached as Exhibit "B".

3. A summary of the total waste water characteristics to be received from the applicant shall be submitted in proper form as Exhibit "C".

4. Additional information requested by the Director of Pure Waters shall be prepared as Exhibit "D" and be attached to the application as required. Copies of the Application and issued Permit of the New York State Department of Health are required for haulers of scavenger wastes and will be attached as Exhibit "D".

Applicants Name: Mr. Michael Rick

Title: Vice President Engineering

Phone No: (716) 247-4700

Person to be contacted for inspection or emergency.

Name: Mr. Michael Rick

Phone No: (716) 247-4700

Ext: _____

APPLICATION for LICENSE or PERMIT for DISCHARGE into PURE WATERS SEWER SYSTEM or TRIBUTARY

1. **Name of Applicant: Company or Individual** — Erdle Perforating Company

2. **Address of Applicant:** — 100 Pixley Industrial Parkway
   Rochester, NY 14603

3. **Location of Property:** — Gates, NY

4. **Ownership of Property: (Name/Address if Different than above)** — As above

5. **Number of Sewer Connections requiring License or Permit:** — one (1)

6. **Type of activity producing wastes requiring License or Permit pursuant to Sewer Use Law of Monroe County:** — Groundwater remediation

7. **Department of Health or of New York State Permit Number (if any):** — N/A

8. **Number of Attachments:**

   Exhibit "A" — ATTACHED

   Exhibit "B" — ATTACHED

   Exhibit "C" — ATTACHED

   Exhibit "D" — ATTACHED

Note: Fill in all spaces. If not applicable, mark N/A in appropriate space.

Rev. 7/21/88
JR&R pg. A7
Form # 8-2

INITIAL INDUSTRIAL SEWER USE PERMIT

County of Monroe Pure Waters District No. _____ Permit No._____

Expires: _____

Fee: _____

Firm Name: Erdle Perforating Company

Address: 100 Pixley Industrial Parkway

Rochester, NY 14603

Type of Business or Service: Metal Perforating

I. The above-named applicant is permitted to discharge wastes into the Pure Waters Sewer System or Tributary thereto as applied for by an application dated_____and verified by the applicant except the Director of Pure Waters requires the following terms and conditions to govern the permitted discharge:

A._____

B._____

C._____

II. The applicant further agrees to:

1. Accept and abide by all provisions of the Sewer Use Law of Monroe County and of all pertinent rules or regulations now in force or shall be adopted in the future.

2. Notify the Director of Pure Waters in writing of any revision to the plant sewer system or any change in industrial wastes discharge to the public sewers listed in Exhibit "B". The latter encompasses either (1) an increase or decrease in average daily volume or strength of wastes listed in Exhibit "B" or (2) new wastes that were not listed in Exhibit "B".

3. Furnish the Director of Pure Waters upon request any additional information relating to the installation or use of sewer or drain for which this permit is sought.

4. Operate and maintain any waste pretreatment facilities, as may be required as a condition of the acceptance into the public sewer of the industrial wastes involved, in an efficient manner at all times, and at no expense to the County.

5. Cooperate with the Director of Pure Waters or his representatives in their inspecting, sampling, and study of wastes, or the facilities provided for pretreatment.

6. Notify the Director of Pure Waters immediately of any accident, negligence, breakdown of pretreating equipment, or other occurrence that occasions discharge to the public sewers of any wastes or process waters not covered by this permit.

Applicant's Signature & Title: Michael Rick Date: 4/1/97

Name of person to be contacted for inspection or emergency purposes:

Mr. Michael Rick (716) 247-4700

Permit approved by:_____ Date:_____

Director of Pure Waters

APPLICATION FOR PERMIT TO DISCHARGE INTO PURE WATERS SEWER SYSTEM

EXHIBIT "A"

DESIGN DRAWINGS

The following drawings from the design drawing package were submitted to Monroe County Pure Waters with this Request to Discharge application package:

- C-2
- I-1
- M-1
- M-3
- M-4
- M-5

These drawings have not been included in this appendix because they are part of the design drawing package which accompanies this report.

APPLICATION FOR PERMIT TO DISCHARGE INTO PURE WATERS SEWER SYSTEM

EXHIBIT "B"
SCHEDULE OF PROCESS WATERS PRODUCED

On average, a continuous flow of 8 gallons per minute (11,520 gallons per day) of process water is expected to be discharged to the sanitary sewer. The process water will be pretreated with granular activated carbon to remove any volatile organic compounds and will be essentially "unpolluted waters". Refer to Exhibits C and D for further details.

SUMMARY of INDUSTRIAL WASTE CHARACTERISTICS
EXHIBIT "C"

Co. Name: Erdle Preforating Company

Address: 100 Pixley Industrial Parkway, Rochester, NY 14603

Industrial Waste Characteristics and Quantity

Characteristics	Unit	Average	Minimum	Maximum
Volume	(Gal. or Cu. Ft./Month)	346,000	173,000	864,000
Temperature	(F or C)	55°F		
pH		6.8		
Biochemical Oxygen demand	(mg/L or lbs/mil gal)	NR	NR	NR
Chlorine Demand	(mg/L or lbs/mil gal)	NR	NR	NR
Suspended Solids	(mg/L or lbs/mil gal)	NR	NR	NR
Phosphate or Phosphorus	(mg/L or lbs/mil gal)	NR	NR	NR

SUBSTANCES UNDER ARTICALS IV, V, VI, VII of SEWER USE LAW

(list items and concentration (or volume) under appropriate heading: if none, so state)

1.	Unpolluted Waters	(Sec. 4.1)	Volume 346,000 gal
2.	Prohibited Materials	(Sec. 4.2)	None
3.	Certain Materials and/or characteristics	(Sec. 4.3)	None
4.	Toxic Substances	(Sec. 5.1, 5.2)	None
5.	Pathogenic Bacteria	(Sec. 5.1)	None
6.	Radioactive Wastes	(Sec. 6.2)	None
7.	Scavenger Wastes	(Sec. 7.1, 7.2)	None

Rev. 7/21/88
JR&R pg. A9
Form # 8-4

NR= Not Required

APPLICATION FOR PERMIT TO DISCHARGE INTO PURE WATERS SEWER SYSTEM

EXHIBIT "D"
ADDITIONAL INFORMATION

Radian International will be implementing soil and groundwater remediation pursuant to an Interim Remedial Measure at the Erdle Perforating Company (Erdle) located in Gates. This action will be undertaken to meet the requirements of Section V, Interim Remedial Measures, of the endorsed Administrative Order of Consent (AOC), Index Number B8-0185-87-05, between New York State Department of Environmental Conservation (NYSDEC) and Erdle.

The patented Xerox 2-PHASE Extraction process will be used to remove site contamination consisting primarily of trichloroethene, 1,2-dichloroethene, and vinyl chloride. The 2-PHASE Extraction process uses a vacuum pump to simultaneously extract contaminated groundwater and soil vapor from extraction wells strategically located within the area of subsurface contamination. For more detailed information, please refer to the documents entitled, "Interim Remedial Measure Work Plan, Erdle Perforating Company, Site Number 828072", dated February 1996, and "Design Report/Start-Up, Operation & Maintenance Manual, Interim Remedial Measure, Erdle Perforating Company Site, NYSDEC Site #828072, Town of Gates, New York", dated January 1997. These documents are on file with the New York State Department of Environmental Conservation and provide an in-depth summary of the site and the proposed work to be performed.

During the extraction process, volatile organic compounds (VOCs) are stripped from the recovered groundwater and transferred to the vapor phase. Stripping efficiencies for systems operating on similar sites are typically between 90-100%. Vapor and groundwater flow from the extraction wells is separated by the extraction equipment into their respective phases and then discharged independently. This is illustrated by the results from the most recent groundwater sampling event and, calculated "post-stripping" discharge water concentrations, presented in Table 1. These post-stripping concentrations are indicative of what would remain in the liquid stream from each well after extraction by 2-PHASE™ and the associated VOC stripping.

After the stripping process is completed, the contaminated liquid stream will be pumped through bag filters to remove suspended solids and then passed through two parallel trains of two 200-pound aqueous granular activated carbon (GAC) canisters to remove residual VOCs. The stream will then be discharged to the sanitary sewer via a floor drain within the manufacturing facility which is connected to a Monroe County Pure Waters (MCPW) sewer. This MCPW sewer runs north to south and is located on the west side of the plant (see Exhibit A).

Table 1
Erdle Perforating Company Interim Remedial Measure Estimated Concentrations Of Volatile Organic Carbon (VOC) Compounds In Groundwater Prior To And Following 2-PHASE Extraction And Treatment

Compound	Concentration of VOCs in Extraction Wells (ug/L)								Concentration of VOCs in Water Discharged to Sanitary Sewer (After CarbonTreatment) (ug/L)
	Pre-stripping (in-situ) Concentrations				Post-stripping (by 2-PHASE) Concentrations				
	EW-1	EW-2	EW-3	EW-4	EW-1	EW-2	EW-3	EW-4	
1,2-dichloroethene	72			2.6	3.6			0.13	0
trichloroethene	420	550000	1000	2.3	21	27500	50	0.12	0
vinyl chloride	2200		98	18	110		4.9	0.9	0

Note: 1. Values estimated from groundwater data from monitoring wells adjacent to locations of proposed extraction wells.

2. Post-stripping concentrations calculated based on an assumed 95% stripping efficiency.

ACORD CERTIFICATE OF LIABILITY INSURANCE

DATE (MM/DD/YY) 03/17/1997

PRODUCER (716)546-3747 FAX (716)546-5867
Hatch-Leonard/Markin-Shaw, Inc.
25 Franklin Street Ste 650
Rochester, NY 14604-1098

Attn: Jamie Ott, CPCU Ext: 7725

INSURED
Erdle Perforating Company
Erdle Realty Associates
Attn: Ron Dewey
P.O. Box 1568
Rochester, NY 14603-1568

THIS CERTIFICATE IS ISSUED AS A MATTER OF INFORMATION ONLY AND CONFERS NO RIGHTS UPON THE CERTIFICATE HOLDER. THIS CERTIFICATE DOES NOT AMEND, EXTEND OR ALTER THE COVERAGE AFFORDED BY THE POLICIES BELOW.

COMPANIES AFFORDING COVERAGE

COMPANY A: Federal Insurance Company
COMPANY B: Pacific Indemnity Company
COMPANY C:
COMPANY D:

COVERAGES

THIS IS TO CERTIFY THAT THE POLICIES OF INSURANCE LISTED BELOW HAVE BEEN ISSUED TO THE INSURED NAMED ABOVE FOR THE POLICY PERIOD INDICATED, NOTWITHSTANDING ANY REQUIREMENT, TERM OR CONDITION OF ANY CONTRACT OR OTHER DOCUMENT WITH RESPECT TO WHICH THIS CERTIFICATE MAY BE ISSUED OR MAY PERTAIN, THE INSURANCE AFFORDED BY THE POLICIES DESCRIBED HEREIN IS SUBJECT TO ALL THE TERMS, EXCLUSIONS AND CONDITIONS OF SUCH POLICIES. LIMITS SHOWN MAY HAVE BEEN REDUCED BY PAID CLAIMS.

CO LTR	TYPE OF INSURANCE	POLICY NUMBER	POLICY EFFECTIVE DATE (MM/DD/YY)	POLICY EXPIRATION DATE (MM/DD/YY)	LIMITS		
A	GENERAL LIABILITY X COMMERCIAL GENERAL LIABILITY CLAIMS MADE X OCCUR OWNER'S & CONTRACTOR'S PROT	35132327	01/01/1997	01/01/1998	GENERAL AGGREGATE PRODUCTS - COMP/OP AGG PERSONAL & ADV INJURY EACH OCCURRENCE FIRE DAMAGE (Any one fire) MED EXP (Any one person)	$ $ $ $ $ $	2,000,000 2,000,000 1,000,000 1,000,000 1,000,000 10,000
A	AUTOMOBILE LIABILITY X ANY AUTO ALL OWNED AUTOS SCHEDULED AUTOS X HIRED AUTOS X NON-OWNED AUTOS	(98)73022450	01/01/1997	01/01/1998	COMBINED SINGLE LIMIT BODILY INJURY (Per person) BODILY INJURY (Per accident) PROPERTY DAMAGE	$ $ $ $	1,000,000
	GARAGE LIABILITY ANY AUTO				AUTO ONLY - EA ACCIDENT OTHER THAN AUTO ONLY: EACH ACCIDENT AGGREGATE	$ $ $	
	EXCESS LIABILITY UMBRELLA FORM OTHER THAN UMBRELLA FORM				EACH OCCURRENCE AGGREGATE 	$ $ $	
B	WORKERS COMPENSATION AND EMPLOYERS' LIABILITY THE PROPRIETOR/ PARTNERS/EXECUTIVE OFFICERS ARE: INCL / EXCL	(98)70024748	01/01/1997	01/01/1998	X WC STATUTORY LIMITS / OTHER EL EACH ACCIDENT EL DISEASE - POLICY LIMIT EL DISEASE - EA EMPLOYEE	$ $ $	500,000 500,000 500,000
	OTHER						

DESCRIPTION OF OPERATIONS/LOCATIONS/VEHICLES/SPECIAL ITEMS

CERTIFICATE HOLDER

Radian Engineering Inc.
155 Corporate Woods Suite 100
Rochester, NY 14623

CANCELLATION

SHOULD ANY OF THE ABOVE DESCRIBED POLICIES BE CANCELLED BEFORE THE EXPIRATION DATE THEREOF, THE ISSUING COMPANY WILL ENDEAVOR TO MAIL 30 DAYS WRITTEN NOTICE TO THE CERTIFICATE HOLDER NAMED TO THE LEFT, BUT FAILURE TO MAIL SUCH NOTICE SHALL IMPOSE NO OBLIGATION OR LIABILITY OF ANY KIND UPON THE COMPANY, ITS AGENTS OR REPRESENTATIVES.

AUTHORIZED REPRESENTATIVE
Robert French/JO

©ACORD CORPORATION 1988

APPENDIX C

HEALTH AND SAFETY PLAN

HEALTH & SAFETY PLAN FOR
INTERIM REMEDIAL MEASURE
ERDLE PERFORATING COMPANY SITE
TOWN OF GATES, NEW YORK
NYSDEC SITE #828072

TABLE OF CONTENTS

		Page
1.0	INTRODUCTION	C-1
2.0	PROJECT DESCRIPTION	C-1
2.1	Description of Project or Task	C-1
2.2	Key Personnel Responsibilities and Authority	C-2
2.2.1	Key Personnel	C-2
2.2.2	Project Manager	C-2
2.2.3	Project Engineer	C-2
2.2.4	Environmental Affairs Coordinator (EAC)	C-3
2.2.5	Site Safety Officer	C-3
2.2.6	On-Site Radian Personnel	C-3
2.2.7	Authority	C-4
2.3	Subcontractor Responsibilities	C-4
3.0	EMERGENCY MEDICAL INFORMATION	C-5
3.1	On-Site Medical Facility or First Aid Stations	C-5
3.2	Accidents and Injuries	C-5
3.3	Site Communications	C-8
3.4	Site Security and Control	C-8
3.5	Fire Fighting Procedures	C-9
3.6	Emergency Decontamination Procedure	C-9
3.7	Emergency Equipment	C-9
4.0	HAZARD ANALYSIS	C-10
4.1	Chemical Hazards	C-10
4.2	Noise	C-10
4.3	Drilling	C-13
4.4	Heavy Equipment	C-13
4.5	Electrical Hazards	C-14
4.6	Maintenance Activities	C-14
4.7	Heat Stress	C-14

TABLE OF CONTENTS (Continued)

		Page
5.0	MONITORING REQUIREMENTS	C-15
6.0	PERSONAL PROTECTIVE EQUIPMENT (PPE)	C-18
7.0	SITE CONTROL	C-18
8.0	DECONTAMINATION REQUIREMENTS	C-20
9.0	RECORDKEEPING REQUIREMENTS	C-22
10.0	TRAINING	C-22
11.0	GENERAL SITE OPERATING PROCEDURES/SAFETY GUIDELINES	C-23
12.0	MEDICAL MONITORING	C-24
13.0	SIGNATURES	C-25
ATTACHMENT A	MSDSs	
ATTACHMENT B	DRILLING SAFETY	

LIST OF TABLES

		Page
C-1	Emergency response Phone Numbers	C-6
C-2	Chemical Properties	C-11
C-3	Health Effects and Toxicity	C-12
C-4	Air Monitoring Response Plan	C-16
C-5	Response Plan for Vinyl Chloride Sampling	C-17
C-6	Personal Protective Equipment	C-19
C-7	Decontamination Procedures	C-21

LIST OF FIGURES

		Page
C-1	Route Map to Hospital	C-7

1.0 INTRODUCTION

This document will serve as the Health and Safety Plan for an Interim Remedial Measure (IRM) to be conducted at the Erdle Perforating Company (Erdle), Town of Gates, New York. The intent of this Health and Safety Plan (HASP) is to provide the minimum safety requirements, and general procedures, to be met by Radian International LLC (Radian) employees, subcontractors, Erdle representatives, and representatives of State or Local agencies who may visit the site. The Plan will be discussed with site personnel and will be available for review while remedial activities are in progress.

2.0 PROJECT DESCRIPTION

2.1 Description of Project or Task

An Interim Remedial Measure using the 2-PHASE Extraction process will be implemented at the Erdle site to remove chemical constituents from subsurface soils and groundwater in the unconsolidated materials under the site. The purpose of this Health and Safety Plan is to address hazards which may be associated with the operation of the 2-PHASE Extraction system, air emissions from the system, groundwater sampling at the site, and subsurface soil sampling at the site. Specific tasks to be addressed include:

- Construction of extraction wells;
- Construction of the 2-PHASE Extraction system;
- Routine sampling of the vapor and water streams;
- Routine maintenance and troubleshooting of extraction and treatment system components;
- Periodic water level measurements and groundwater sampling of monitoring wells; and
- Periodic subsurface soil sampling.

2.2 Key Personnel Responsibilities and Authority

This section outlines the responsibilities of project personnel regarding health and safety. Radian personnel who will have overall responsibility for establishing and implementing safe work practices on this project are the: Program Manager, Project Director, Certified Industrial Hygienist (CIH), and Site Safety Officer (SSO). The CIH shall have the ultimate responsibility for the development, implementation, and enforcement of the project HASP.

2.2.1 Key Personnel

Personnel with overall responsibility for the safe conduct on this project are:

Erdle Perforating Project Manager:	Michael Rick
Project Manager:	James E. Baxter, P.G.
Project Engineer:	John Yackiw, P.E.
Environmental Affairs Coordinator:	Carolyn Solomon, CIH, CSP
Field Task Leader and Site Safety Officer:	Stephen Thorpe

2.2.2 Project Manager

The Project Manager assumes overall responsibility for managing Radian activities in accordance with this Start-Up, Operation, and Maintenance Manual (SOMM), the execution of the health and safety contractual obligations, and for communicating administrative health and safety issues with Erdle Perforating Co. and the field team, and subcontractors.

2.2.3 Project Engineer

The Project Engineer is responsible for assuring that all Radian activities are conducted in accordance with the SOMM, this Health and Safety Plan, and State of New York Professional Engineering requirements.

2.2.4 Environmental Affairs Coordinator (EAC)

The EAC is responsible for Health and Safety Plan preparation and administration. The EAC's responsibilities include:

- Revising the HASP;
- Reviewing and confirming any requests for changes in personal protective clothing or respiratory protection requirements;
- Reviewing the health and safety documentation;
- Providing technical support to the Project Manager and the Site Safety Officer (SSO) by reviewing and confirming any requests for changes in health and safety requirements specified in the HASP; and
- Ultimate responsibility for development, implementation, and enforcement of the project HASP.

2.2.5 Site Safety Officer

The Site Safety Officer's responsibilities include:

- Acquainting field personnel with the provisions of the HASP;
- Implementing the HASP in the field;
- Establishing and monitoring compliance with site control areas and procedures;
- Stopping work upon the determination of a dangerous situation;
- Notifying the EAC and Project Manager of any unanticipated hazards or situations which are not adequately addressed by this plan;
- Conducting on-site briefings for field team members and subcontractors as needed;
- Implementing any required on-site emergency response activities;
- Preparing any required incident reports; and
- Obtaining approval from the EAC and Project Manager for any requested changes in the personal clothing, respiratory protection, or health and safety requirements specified in this plan.

2.2.6 On-Site Radian Personnel

All on-site employees, including subcontractors, will accept the responsibility of following the HASP and performing work in a safe manner. Employees are expected to:

- Read and understand this plan;
- Perform work safely;
- Report any unsafe conditions to the SSO; and
- Be aware of, and alert for, signs and symptoms of exposure to the physical and chemical hazards identified in this plan.

2.2.7 Authority

The Radian Project Manager and the SSO have the authority to enforce Radian's general health and safety rules and the site-specific rules contained in this plan. Changes in its plan can be made if both the Project Manager and the EAC agree that the changes are appropriate. If agreement cannot be reached by these persons, the Radian Corporate Health and Safety Administrator, John Cargill (512/454-4797), will have the final authority to approve changes in the health and safety plan.

2.3 Subcontractor Responsibilities

The subcontractor(s) performing work on site during this project will be responsible for:

- Developing a site-specific safety and health plan or adapting Radian's plan for their health and safety procedures. The plan will specify health and safety procedures and practices to be followed by the subcontractor's employees during the on-site activities;
- Ensuring that their on-site employees comply with their site-specific safety and health plan;
- Identifying a site safety and health coordinator; and
- Reporting health and safety problems to the designated health and safety coordinator.

3.0 EMERGENCY MEDICAL INFORMATION

Emergency medical contact information is provided on Table C-1. This table will be maintained at the work site and its location made known to all employees. The location of the nearest telephone will be determined prior to beginning onsite activities. Should someone be transported to a hospital or doctor due to project-related medical problems, a copy of this Health and Safety Plan must accompany them.

3.1 On-Site Medical Facility or First Aid Stations

A standard portable first aid kit will be maintained onsite. The SSO will ensure its availability on-site and will inform each field team member of its location.

3.2 Accidents and Injuries

In the event of a safety or health emergency at the site, appropriate emergency measures will immediately be taken to assist those who have been injured or exposed and to protect others from hazards (see Figure C-1 for the location of area hospitals in relationship to the site). The SSO will be immediately notified and will respond according to the seriousness of the injury. Personnel trained in First Aid will be present during onsite activities to provide appropriate injuries or illnesses incurred during operations. The Project Manager will be immediately informed on any serious injuries. The Project Manager and SSO will investigate site conditions leading to the illness or injury to determine whether and at what levels exposure actually occurred, the cause of exposure, and the means to prevent the incident from recurring.

Appropriate documentation of the incident will be completed by the Project Manager and the SSO if the incident results in a reportable lost-time incident per OSHA and will be filed in the project file, the Radian Corporate Health and Safety Administrator's files, and the

Table C-1
Emergency Response Phone Numbers

Contact	Address	Telephone
Radian Corporation Carolyn Solomon, CIH, CSP James E. Baxter, PG	155 Corporate Woods, Suite 100 Rochester, NY 14623	(716) 453-5640 (716) 292-1870
Police Department (Gates)	1605 Buffalo Road	911 or (716) 247-2260
Fire Department	Available through Police Dept.	911 or (716) 426-1221
Ambulance	1600 Buffalo Road	911 or (716) 247-5511
EPA Regional Office (Region II)	Federal Building 26 Federal Plaza New York, New York 10278	(212) 264-9589
Parkridge Hospital	155 Long Pond Road Greece, New York (See Figure A-1 for route)	(716) 723-7000
NYSDEC	6274 East Avon-Lima Road Avon, New York 14414	(716) 226-2466
NYSDOH Dave Napier, Rochester Field Office	Bevier Building 42 South Washington Street Rochester, New York 14608	(716) 274-8071
NYSDOH Western Section	2 University Place Bureau of Environmental Exposure Investigation Albany, New York 12203	1-800-458-1158 (518) 458-6308
Monroe County Health Department	111 Westfall Road Rochester, New York 14692	(716) 274-6904

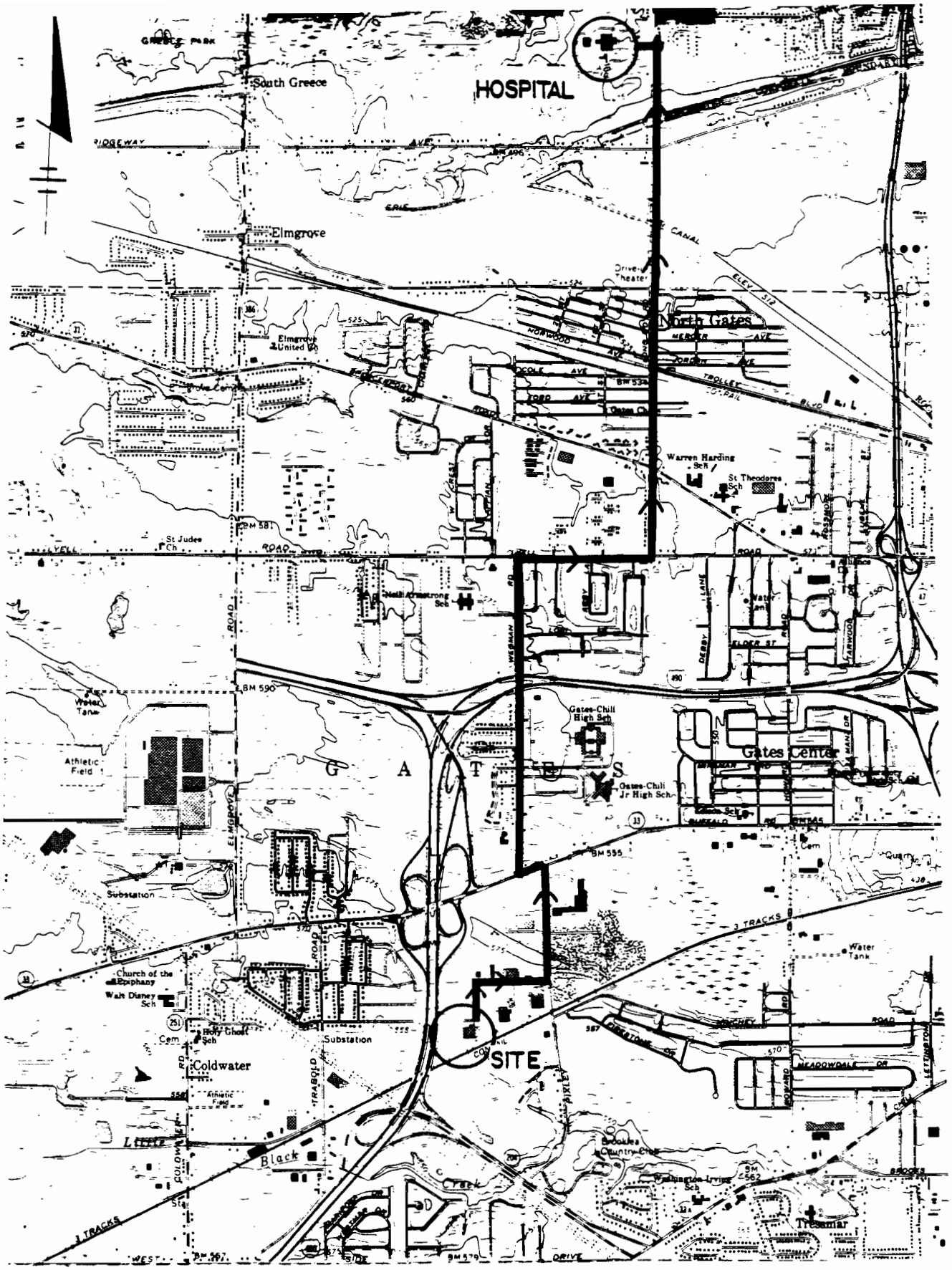

Figure C-1. Route Map to Hospital

employee's medical records. All necessary emergency equipment must be recharged, refilled, or replaced following the incident.

3.3 Site Communications

Due to the small size of the site, communications between project team members can be maintained by normal conversation. Telephones are available within the Erdle Perforating Company building for emergency response and office communications. Public telephones are available at the Westmar Shopping Plaza located on Pixley Road approximately 1.5 miles northeast of the site.

3.4 Site Security and Control

The 2-PHASE Extraction equipment is housed in a lockable trailer and will be kept locked when Radian personnel are not onsite. Associated treatment equipment will be maintained inside a secure portion of the Erdle Perforating Company building. Keys to the equipment will be maintained by the Radian onsite personnel and the Erdle Project Manager.

In the event of a leak or break in the piping network outside of the 2-PHASE Extraction trailer, the 2-PHASE Extraction unit should be immediately shut down using the stop control. The area where the break occurred will be isolated, and the Radian Project Manager and Erdle Project Manager shall be notified at once. The Radian onsite personnel and Project Manager will be consulted for additional appropriate response action.

If a malfunction occurs within the 2-PHASE Extraction trailer, the system should be immediately shut down using the stop control. Notify the Radian Project Manager and Erdle Project Manager. The 2-PHASE Extraction system is equipped with appropriate sensors to cause system shutdown when a potentially hazardous situation arises.

3.5 Fire Fighting Procedures

A fire extinguisher will be maintained onsite during all onsite activities and operations. This fire extinguisher shall be used only for small fires by trained personnel, and it is recommended that the fire department be contacted to confirm that the fire is extinguished. Where the fire cannot be controlled with the extinguisher, the area should be evacuated immediately and the SSO shall direct the contacting of the fire department specified in Table C-1 above.

3.6 Emergency Decontamination Procedure

The extent of emergency decontamination depends on the severity of the injury or illness and the nature of the contamination. Whenever possible, decontamination should consist of (at a minimum) washing, rinsing, and/or cutting off of contaminated outer clothing and equipment. If there is insufficient time, the person should be given first aid treatment, and then wrapped in plastic or a blanket prior to transport to medical care. If heat stress is a factor in the victim's illness or injury, the outer protective garments (if used) must be immediately removed from the victim.

3.7 Emergency Equipment

Onsite equipment for safety and emergency response shall be maintained, as follows:

- Fire extinguisher;
- First aid kit;
- Eye wash station (wash bottles at a minimum);
- Extra copy of the Health and Safety Plan.

4.0 HAZARD ANALYSIS

4.1 Chemical Hazards

The Phase I and Phase II Remedial Investigation has identified the presence of the following hazardous chemical constituents/concentrations in soils and groundwater at the portion of the site undergoing the IRM:

Trichloroethene [up to 2,800 µg/kg (soil) and 550,000 µg/L (water)]
1,2-Dichloroethene [up to 51,000 µg/kg (soil) and 150,000 µg/L (water)]
Vinyl chloride [up to 13,000 µg/L (water)]
Methylene chloride [up to 4,820 µg/L (water--possible lab contaminant)]
Chloroform [3.6 µg/L (water--possible lab contaminant)]
Toluene [up to 60 µg/kg (soil)]
Xylenes [up to 250 µg/kg (soil)]

Chemical properties and health effects and toxicity for these chemicals are presented in Tables C-2 and C-3. Material Safety Data Sheets are provided in Attachment A. During activities that could potentially involve skin contact with groundwater or subsurface soils, personnel will wear nitrile gloves. Monitoring of breathing zone air will be conducted during groundwater sampling, subsurface soil sampling, extraction well installation, and activities that involve opening of the vacuum extraction system to the atmosphere.

4.2 Noise

Noise levels adjacent to the drill rig may exceed 85 dBA during extraction well drilling and installation. Hearing protection is required for persons within this work zone during drilling and split spoon operations.

Table C-2
Chemical Properties

Chemical Name	TLV[1]/ PEL[2]	Routes of Exposure[3]	Flash Point (F)	LEL[4] & UEL[5] (%)	Incompatible Materials	Odor Threshold (PPM)	Ion Potential
Vinyl chloride	1 ppm (PEL) 5 ppm (ceiling)	I, M	None	36/33	Iron, steel, copper, oxidizers, aluminum peroxide	10-20 ppm	9.9
Methylene chloride	500(PEL) 50 ppm (TLV)	IMS	NA	14/22	Strong oxidizers, caustics, chemically active metals, concentrated nitric acid	160 ppm	11.2
Chloroform	10 ppm (TLV)	I, M	NA	NA	Strong alkalines	0.5 ppm	11.4
Trichloroethene	50 ppm (TLV)	IMS	90 F.	8- 10.5	Strong alkalines; may form HCl or phosgene in presence of high heat or electric arc .	50-100 ppm	9.47
Toluene	100 ppm (PEL) 50 ppm (TLV)	IMS	40	1.2/7.1	Strong oxidizers	0.16-0.37	8.82
Xylenes	100 ppm (PEL)	IMS	63/84 81 F	1.0/7.0	Strong oxidizers	20	8.45
1,2-dichloroethene	200 ppm (PEL)	IMS	36	5.6/12.8	Strong oxidizers and alkalis, potassium hydroxide, copper	0.08-17	9.65

NA = Not Applicable.

[1] Threshold Limit Value from ACGIH

[2] Permissible Exposure Limit from OSHA Regulations

[3] Routes include: Inhalation (I)/Ingestion by Mouth (M)/ Through Skin (S)

[4] Lower Explosive Limit

[5] Upper Explosive Limit

Table C-3
Health Effects and Toxicity

Chemical Name	Acute Effects	Chronic Effects
Vinyl chloride	Weak; abdominal pain; pallor or cyanosis of extremities.	Carcinogen; liver, CNS, respiratory, and lymphatic damage.
Methylene chloride	Fatigue, weakness, sleepiness, numbness, eye or skin irritation, nausea.	Skin, CVS, CNS or eye damage; carcinogen.
Chloroform	Dizziness, mental illness, nausea, headache	Suspect human carcinogen, liver damage
Trichlorethene	Fatigue, headache, irritability, dizziness, defatting of skin.	Suspect carcinogen; liver, kidney, lung, heart, CNS, and skin damage
Toluene	Fatigue, weakness, dizziness, headache, dilated pupils, lacrimation, nervousness.	CNS, liver, kidney, and skin damage.
Xylenes	Dizziness, abdominal pain, eye, nose, or throat irritation, drowsiness, vomiting.	CNS, eyes, GI tract, blood, liver, kidney, and skin damage.
1,2-dichloroethene	Eye irritation, respiratory irritation, CNS depression.	Respiratory, eye, and CNS depression.

Material Safety Data Sheets are provided in Attachment A.

Excessive noise levels may also be encountered during above-ground system construction (i.e. during concrete drilling, wall penetration work, etc.). If noise levels prevent normal conversation at three feet, the noise levels require hearing protection.

Due to noise from compressors, motors, and blowers, noise in the 2-PHASE Extraction trailer may be over the 85 dBA limit. Hearing protection is required for work inside the extraction trailer when the system is in operation.

4.3 Drilling

The primary physical hazards associated with drilling operations are generally associated with placement and operation of the drill rig. Drill rig operations may present such hazards as being struck by flying or falling objects during the raising or lowering of the derrick and sampling hammer, the rigging of drill bits and casing, or potential for physical hazards that may cause personnel to slip, trip, or fall. Proper positioning and blocking of the rig is essential to prevent possible shifting or collapse

The SSO will contact facility personnel and local utility companies in the area to determine the presence of any underground utilities. If any underground lines are located near a drilling area they will be marked prior to any drilling activity. This contact needs to be done at least 72 hours prior to drilling activities. Other drilling procedures are presented in Attachment B.

4.4 Heavy Equipment

Heavy equipment in the form of drill rigs, backhoes, and other construction machinery may be used during the construction of the 2-PHASE Extraction system. The operator's visibility may be obscured by the load being handled, dusty conditions, or other equipment. The following guidelines will be observed:

- Workers must make their presence known, and stay within visible range;
- Operators must stay in moving equipment and wait until it stops before getting off;
- Personnel must be aware of rotating equipment. Do not wear loose clothing or jewelry. Tie long hair back;
- Observe traffic patterns and stay out of the way; and
- Assure equipment is in working order, check daily and/or monthly inspection records.

4.5 Electrical Hazards

The 2-PHASE Extraction equipment is electrically powered. Electrical disconnects are located on the trailer-mounted equipment. Before conducting any maintenance or repair of the 2-PHASE Extraction equipment, the lock-out/tag-out procedure provided in the system O&M manual will be consulted.

4.6 Maintenance Activities

Prior to any maintenance activities the system will be de-energized (disconnected from electrical power) as specified in the lock-out/tag-out procedures in the O&M manual. Air monitoring will be conducted as specified in Section 5.0 on operations that expose contaminated groundwater or soil vapor to the atmosphere. During activities that could possible result in skin contact with groundwater, personnel will wear nitrile gloves.

4.7 Heat Stress

Personnel working under extreme heat or cold conditions are subject to adverse temperature-related effects. Workers shall be aware of their own condition, and visually monitor

each other for signs of heat-stress. Periodic breaks shall be taken, with liquid intake, to prevent heat stress.

5.0 MONITORING REQUIREMENTS

Monitoring of employee breathing zones will be conducted using a photoionization detector (PID) equipped with an 11.7 eV probe or a flame ionization detector such as an OVA. These instruments will respond adequately to the compounds listed in the preceding Chemical Properties and Health Effects and Toxicity tables. Instruments to be used during site activities will be calibrated before and after use and will meet federal and state requirements.

Breathing zone monitoring will be conducted continuously during borehole drilling and every 30 minutes during system construction, soil sampling, groundwater sampling, and system repair activities. The following response plan will be used to determine appropriate actions and/or Personal Protective Equipment (PPE) requirements. Table C-4 shows the air monitoring response plan to be followed. If continuous VOC levels greater than 1 ppm are detected, detector tube sampling for vinyl chloride will be initiated as specified in Table C-5. Additional air monitoring for VOCs will be conducted at the site perimeter when VOC levels in the work area are continuously greater than 10 ppm. If site perimeter VOCs are greater than 10 ppm, the work will be stopped.

Reasonable fugitive dust suppression techniques will be employed during site activities which may generate fugitive dust. Particulate monitoring during soil drilling operations for the Phase I and Phase II Remedial Investigations indicated no detectable levels of fugitive dust associated with those activities. Particulate monitoring will be conducted during soil excavation activities, if any, and fugitive dust suppression measures will be undertaken if monitoring indicates particulate levels in excess of 5 milligrams per cubic meter.

Table C-4
Air Monitoring Response Plan

Instrument	Level[1]	Response[2]
Hnu Photoionization Detector with 11.7 eV lamp or Flame Ionization Detector	0-1 ppm	No additional response; Perform continuous monitoring
HNU Photoionization Detector with 11.7 eV lamp or Flame Ionization Detector	1-10 ppm sustained for more than 5 minutes	No additional response; Perform continuous monitoring; Begin detector tube sampling for vinyl chloride (See Table C-5)
HNU Photoionization Detector with 11.7 eV lamp or Flame Ionization Detector	10-250 ppm	Institute Level C protection (Section 6.0), including use of half-mask organic vapor respirators. Make sure available fans are operating and doors are open. Perform continuous monitoring in breathing zone; Set up site control zones (Section 7.0)
HNU Photoionization Detector with 11.7 eV lamp or Flame Ionization Detector	> 250 ppm	Evacuate area and notify the Radian EAC, Project Manager, and site contact for further evaluation and instruction.[3]

[1] Reading taken in the breathing zone of the person closest to the operation.
[2] Response will depend on type and level of reading.
[3] Alternates if EAC unavailable: Scott Harter-Radian (716) 292-1870.

Table C-5
Response Plan for Vinyl Chloride Sampling

Instrument	Level[1]	Response[2]
Drager hand pump with vinyl chloride detector tubes, 0-10 ppm	0-1 ppm	No additional response; continue detector tube monitoring if HNU readings warrant
Drager hand pump with vinyl chloride detector tubes, 0-10 ppm	>1 ppm	Evacuate area and notify Radian EAC, Project Manager and Site Contact for further evaluations and instruction.[3]

[1] Reading taken in the breathing zone of the person closest to the operation.
[2] Response will depend on type and level of reading.
[3] Alternates if EAC unavailable: Scott Harter-Radian (716) 292-1870.

6.0 PERSONAL PROTECTIVE EQUIPMENT (PPE)

Table C-6 provides a list of the required personal protective equipment (PPE) for the various operations covered by this Health and Safety Plan. If air monitoring per Table C-4 requires upgrading to Level C, the following PPE will be added:

- Poly-coated Tyvek coveralls;
- Nitrile gloves (at all times); Inner latex or nitrile gloves; and
- Half or full-face respirators with organic vapor cartridges.[1]

7.0 SITE CONTROL

Site control will be required during the following activities:

- Extraction well drilling and installation;
- 2-PHASE Extraction system construction;
- Repairs to the 2-PHASE Extraction system; and
- Soil and groundwater sampling.

For normal operations, access to controlled areas will be restricted to drillers, construction workers, construction observation personnel, and sample collectors by the use of flagging tape. If air monitoring indicates that an upgrade to Level C personal protection is required, the site of field operations will be subdivided into three distinct areas. The actual extent of the areas will be determined on a task-specific basis by the Site Safety Coordinator. Access to the various zones will be controlled with fencing and/or plastic flagging tape. These areas will include:

Exclusion Zone (Level C Only): The exclusion zone is the area where the highest potential for exposure by dermal or inhalation routes exists. Personal protective equipment is required and a daily log will be kept of all persons entering this zone. The exclusion zone will be marked off with barricades or barrier tape which will be placed a minimum of 30 feet from the active work area. During field operations this boundary may be expanded by the

[1] Fit test and medical approval of wearers within the past year required.

Table C-6
Personal Protective Equipment

Personal Protective Equipment	Extraction Well Drilling/ Installation and Soil Sampling	System Construction	Routine Operation	Repairs to the Extraction System	Vapor Sampling	Ground-water Sampling
Standard Work Clothing (long pants, shirt, closed-toe shoes)	X	X	X	X	X	X
Safety Glasses	X	X	X (safety glasses should be standard equipment for any industrial operation)	X	X	X
Chemical Resistant Gloves (nitrile)	X (sampling crews)			X	X	X
Leather Work Gloves	X (drilling crews)	X				
Safety Shoes (steel toed)	X	X	X	X	X	X
Hard Hat	X	X				

Site Safety Coordinator based upon observations and/or monitoring measurements. Whenever possible, all field work should be performed upwind from potential contaminant sources. Some situations may necessitate a distance less than the recommended minimum. These circumstances should be reviewed by the Site Safety Coordinator. Visitors are not permitted into controlled zones without the approval of management. Visitors should have satisfactorily completed the OSHA 40-hour training course, be properly fitted with respiratory protection, and have medical clearance.

Contamination Reduction Zone (Level C Only): The contamination reduction is the area immediately adjacent to the exclusion zone. The probability of dermal and inhalation exposure is lower than in the exclusion zone. Typically, contamination reduction zones include facilities for personnel or equipment decontamination. Personal protective equipment worn in the exclusion zone may not be worn outside the contamination reduction zone except during emergencies.

Support Zone (Level C Only): The support zone includes all areas outside the contamination reduction zone. Protective clothing worn in the exclusion zone may not be worn in a support zone except in emergencies.

Authorized visitors will be required to comply with the safe work practice requirements of this plan and also the personal protective equipment use, training, and medical requirements. In addition, visitors will be provided with a copy of this Health and Safety Plan for review and given a site briefing on the requirements of this Plan.

8.0 DECONTAMINATION REQUIREMENTS

If Level C protection is required, a Contaminant Reduction Zone will be established just outside the drilling area, per Section 7.0, and decontamination procedures will be implemented (see Table C-7). Anyone leaving the drilling zone will be required to remove coveralls, gloves and respirators in this area, before leaving the building. At the end of the work day, all disposable gloves, respirator cartridges, and Tyvek will be placed in plastic garbage bags and then into labeled 55-gallon drums, which will be left on-site for eventual disposal arranged by facility personnel.

Table C-7
Decontamination Procedures

1. Drop off tools, etc, on to a plastic sheet in the exclusion zone for subsequent reuse or decontamination.

2. The boot wash station will consist of two plastic or metal tubs, two garden sprayers, and a boot brush. One sprayer will contain a detergent water mixture, and the other will contain clean water.

3. Remove outer layer of disposable protective clothing, outer boots, outer gloves, hood, tape, etc., and place in a receptacle for disposal. Clothing will be removed by "peeling" off while turning it inside-out -- this will minimize contact with possible contamination on the outer surface.

4. Remove respirator and place cartridges in a receptacle for disposal.

5. Inner gloves will be removed by rolling off the hand while turning them inside-out. Gloves will then be placed in a receptacle for disposal.

6. If highly toxic, skin-corrosive, or skin-absorbable materials are known or suspected to be present, personnel must shower before exiting the site. Personnel conducting short-duration activities (i.e., sampling, inspection, etc.) may make modifications to these requirements at the decision of the Site Safety Coordinator.

NOTE: It is the responsibility of the individual employee to strictly adhere to the established personnel decontamination procedures.

Decontamination areas will be designated by Erdle Perforating and will be situated so as to have access to water and electrical (GFI-protected) supplies necessary for the decontamination process. Decontamination areas will be sited in areas of minimal through traffic to limit potential tracking of contaminants away from the decontamination areas.

9.0 RECORDKEEPING REQUIREMENTS

The following records are to be maintained in the program files:

- Copy of the Health and Safety Plan and original sign-off sheet;
- Documentation of the "Level of Protection" donned during sampling (can be in field logbook);
- Copy of any accident or injury reports;
- Copy of the Subcontractor's Health and Safety Plan, training records, and medical surveillance records; and
- Copy of air monitoring results (can be in field logbook or final reports).

10.0 TRAINING

Applicable employees must, at a minimum, have received training which meets the requirements specified in 29CFR 1910.120. In addition, employees involved in this project will receive site-specific training including a review of the information included in this health and safety plan and a review of procedures in the project work plan. As site activities change, supplemental training will be addressed, as will related hazards, risks, operations, procedures, emergency response, site control, and personal protective equipment. Any personnel who are required to implement lockout/tagout procedures, will receive training in standard operating procedures specific to this work site.

Training will be conducted by the Site Safety Coordinator or the Project EAC. Site personnel involved in construction or O&M activities will have received the appropriate basic training and any additional activity specific training where required, prior to initiation of said activities. This Health and Safety Plan must be distributed to subcontractors prior to the

start of construction activities, and a pre-construction meeting will be held to discuss the content of the plan.

11.0 GENERAL SITE OPERATING PROCEDURES/SAFETY GUIDELINES

These are general guidelines for safe operations on potentially contaminated sites:

1. Never work alone in an isolated area of a site.
2. Maintain line-of-sight during activities that could involve potentially hazardous substances.
3. Practice contamination avoidance. Never sit down, kneel, or lay equipment on obvious sources of contamination such as puddles, and avoid unnecessary contact with on-site objects.
4. Hard hats must be worn on site when overhead hazards are present and when safety rules by the site owner require it.
5. Always wear safety glasses during sample compositing and preservation and when safety rules by the site owner require it.
6. No eating, drinking, or smoking in areas of sites that are suspected of being contaminated.
7. In the event PPE is ripped or torn, work shall stop and PPE shall be removed and replaced as soon as possible.
8. Be alert to any unusual changes in your own condition; never ignore warning signs.
9. Notify Health and Safety Coordinator about suspected exposures or accidents.
10. Keep a vehicle readily available for emergency use. Personnel going on site shall be familiar with the most direct route to the nearest hospital.
11. In the event of direct skin contact, the affected area shall be washed immediately with soap and water.
12. Copies of the Health and Safety Plan shall be readily accessible at the site.
13. Never climb over or under refuse or obstacles so as to endanger yourself or others. Use safety harness/safety lines when sampling lagoons, stream beds, and ravines with steep banks.

14. Wash hands and face thoroughly before eating, drinking, etc.

15. Any substantial modifications to this Health and Safety Plan that could affect health and safety MUST be approved by the Projector Director and EAC or their designee.

12.0 MEDICAL MONITORING

All personnel involved in construction or O&M activities where respiratory protective equipment may be worn must be participating in a medical surveillance program designed to monitor and reduce health risks due to potential exposure to hazardous materials. This program must provide baseline medical data for each person involved in hazardous waste operations, and to determine his/her ability to wear personal protective equipment, such as chemically resistant clothing and respirators. The medical surveillance program must include medical examinations administered on a pre-employment and periodic basis and as warranted by symptoms of exposure or specialized activities. The examining physician is required to make a report to each person's employer of any medical condition which would place such employees at increased risk while wearing a respirator or other personal protective equipment. Site personal who wear respiratory protection will have medical clearance to wear a respirator within the past year. Radian employees participate in a medical monitoring program which meets the above-stated requirements. For the purposes of this Health and Safety Plan, subcontractors shall assume the employer's responsibility in obtaining the necessary medical monitoring and training for their employees pursuant to 29CFR1910.120, and provide Radian with applicable monitoring/training certificates.

13.0 SIGNATURES

All crew members must sign that they have read and understand this Health & Safety Plan prior to start of any field work.

Crew	_____	Date	_____
	_____		_____
	_____		_____
	_____		_____
PjM	_____	Date	_____
Geologist	_____	Date	_____
EAC	_____	Date	_____
Onsite Person	_____	Date	_____

ATTACHMENT A

MSDSs

Material Safety Data Sheet

Genium Publishing Corporation
1145 Catalyn Street
Schenectady, NY 12303-1836 USA
(518) 377-8855

GENIUM PUBLISHING CORP.

No. 317
TOLUENE
(Revision D)

Issued: August 1979
Revised: April 1986

SECTION 1. MATERIAL IDENTIFICATION 20

MATERIAL NAME: TOLUENE

OTHER DESIGNATIONS: Methyl Benzene, Methyl Benzol, Phenylmethane, Toluol, C_7H_8, CAS #0108-88-3

MANUFACTURER/SUPPLIER: Available from many suppliers, including:
Allied Corp., PO Box 2064R, Morristown, NJ 07960; Telephone: (201) 455-4400
Ashland Chemical Co., Industrial Chemicals & Solvents Div., PO Box 2219,
Columbus, OH; Telephone: (614) 889-3844

HMIS
H: 2
F: 3
R: 0
PPE*
*See sect. 8

R 1
I 3
S 2
K 4

SECTION 2. INGREDIENTS AND HAZARDS

	%	HAZARD DATA
Toluene	ca 100	8-hr TLV: 100 ppm, or 375 mg/m^3* (Skin)** --- Man, Inhalation, TCLo: 100 ppm: Psychotropic*** --- Rat, Oral, LD_{50}: 5000 mg/kg Rat, Inhalation, LCLo: 4000 ppm/4 hrs. Rabbit, Skin, LD_{50}: 14 gm/kg --- Human, Eye: 300 ppm

* Current (1985-86) ACGIH TLV. The OSHA PEL is 200 ppm with an acceptable ceiling concentration of 300 ppm and an acceptable maximum peak of 500 ppm/10 minutes.

** Skin designation indicates that toluene can be absorbed through intact skin and contribute to overall exposure.

*** Affects the mind.

SECTION 3. PHYSICAL DATA

Boiling Point ... 231°F (111°C)
Vapor Pressure @ 20°C, mm Hg ... 22
Water Solubility @ 20°C, wt. % ... 0.05
Vapor Density (Air = 1) ... 3.14
Evaporation Rate (BuAc = 1) ... 2.24
Specific Gravity (H_2O = 1) ... 0.866
Melting Point ... -139°F (-95°C)
Percent Volatile by Volume ... ca 100
Molecular Weight ... 92.15

Appearance and odor: Clear. colorless liquid with a characteristic aromatic odor. The odor is detectable to most individuals in the range of 10 to 15 ppm. Because olfactory fatigue occurs rapidly upon exposure to toluene, odor is not a good warning property.

SECTION 4. FIRE AND EXPLOSION DATA

Flash Point and Method	Autoignition Temp.	Flammability Limits In Air	LOWER	UPPER
40°F (4°C) CC	896°F (480°C)	% by Volume	1.27	7.1

EXTINGUISHING MEDIA: Carbon dioxide, dry chemical, alcohol foam. Do not use a solid stream of water because the stream will scatter and spread the fire. Use water spray to cool tanks/containers that are exposed to fire and to disperse vapors.

UNUSUAL FIRE/EXPLOSION HAZARDS: This OSHA class IB flammable liquid is a dangerous fire hazard. It is a moderate fire hazard when exposed to oxidizers, heat, sparks, or open flame. Vapors are heavier than air and may travel a considerable distance to an ignition source and flash back.

SPECIAL FIRE-FIGHTING PROCEDURES: Fire fighters should wear self-contained breathing apparatus with full facepiece operated in a positive-pressure mode when fighting fires involving toluene.

SECTION 5. REACTIVITY DATA

CHEMICAL INCOMPATIBILITIES: Toluene is stable in closed containers at room temperature under normal storage and handling conditions. It does not undergo hazardous polymerization. This material is incompatible with strong oxidizing agents, dinitrogen tetraoxide, silver perchlorate, tetranitromethane, and uranium hexafluoride. Contact with these materials may cause fire or explosion. Nitric acid and toluene, especially in the presence of sulfuric acid, will produce nitrated compounds that are dangerously explosive.

CONDITIONS TO AVOID: Avoid exposure to sparks, open flame, hot surfaces, and all sources of heat and ignition. Toluene will attack some forms of plastics, rubber, and coatings. Thermal decomposition or burning produces carbon dioxide and/or carbon monoxide.

Copyright © 1986 Genium Publishing Corporation.
Any commercial use or reproduction without the publisher's permission is prohibited.

SECTION 6. HEALTH HAZARD INFORMATION | TLV

Toluene is not considered a carcinogen by the NTP, IARC, or OSHA. SUMMARY OF RISKS: Vapors of toluene may cause irritation of the eyes, nose, upper respiratory tract, and skin. Exposure to 200 ppm for 8 hours causes mild fatigue, weakness, confusion, lacrimation (tearing) and paresthesia (a sensation of prickling, tingling, or creeping on the skin that has no objective cause). Exposure to higher concentrations may cause headache, nausea, dizziness, dilated pupils, and euphoria, and, in severe cases, may cause unconsciousness and death. The liquid is irritating to the eyes and skin. Contact with the eyes may cause transient corneal damage, conjunctival irritation, and burns if not promptly removed. Repeated and/or prolonged contact with the skin may cause drying and cracking. It may be absorbed through the skin in toxic amounts. Ingestion causes irritation of the gastrointestinal tract and may cause effects resembling those from inhalation of the vapor. Chronic overexposure to toluene may cause reversible kidney and liver injury. FIRST AID: EYE CONTACT: Immediately flush eyes, including under eyelids, with running water for at least 15 minutes. Get medical attention if irritation persists.* SKIN CONTACT: Immediately flush skin (for at least 15 minutes) while removing contaminated shoes and clothing. Wash exposed area with soap and water. Get medical attention if irritation persists or if a large area has been exposed.* INHALATION: Remove victim to fresh air. Restore and/or support breathing as required. Keep victim warm and quiet. Get medical help.* INGESTION: Give victim 1 to 2 glasses of water or milk. Contact a poison control center. Do not induce vomiting unless directed to do so. Transport victim to a medical facility. Never give anything by mouth to a person who is unconscious or convulsing. * GET MEDICAL ASSISTANCE = In plant, paramedic, community. Get medical help for further treatment, observation, and support after first aid, if indicated.

SECTION 7. SPILL, LEAK, AND DISPOSAL PROCEDURES

SPILL/LEAK: Notify safety personnel of large spills or leaks. Remove all sources of heat and ignition. Provide maximum explosion-proof ventilation. Limit access to spill area to necessary personnel only. Remove leaking containers to safe place if feasible. Cleanup personnel need protection against contact with liquid and inhalation of vapor (see sect. 8).
WASTE DISPOSAL: Absorb small spills with paper towel or vermiculite. Contain large spills and collect if feasible, or absorb with vermiculite or sand. Place waste solvent or absorbent into closed containers for disposal using nonsparking tools. Liquid can be flushed with water to an open holding area for handling. Do not flush to sewer, watershed, or waterway.
COMMENTS: Place in suitable container for disposal by a licensed contractor or burn in an approved incinerator. Consider reclaiming by distillation. Contaminated absorbent can be buried in a sanitary landfill. Follow all Federal, state, and local regulations. TLm 96: 100-10 ppm. Toluene is designated as a hazardous waste by the EPA. The EPA (RCRA) HW No. is U220 (40 CFR 261). The reportable quantity (RQ) is 1000 lbs/454 kg (40 CFR 117).

SECTION 8. SPECIAL PROTECTION INFORMATION

Provide general and local exhaust ventilation to meet TLV requirements. Ventilation fans and other electrical service must be nonsparking and have an explosion-proof design. Exhaust hoods should have a face velocity of at least 100 lfm (linear feet per minute) and be designed to capture heavy vapor. For emergency or nonroutine exposures where the TLV may be exceeded, use an organic chemical cartridge respirator if concentration is less than 200 ppm and an approved canister gas mask or self-contained breathing apparatus with full facepiece if concentration is greater than 200 ppm.
Safety glasses or splash goggles should be worn in all work areas. Neoprene gloves, apron, face shield, boots, and other appropriate protective clothing and equipment should be available and worn as necessary to prevent skin and eye contact. Remove contaminated clothing immediately and do not wear it until it has been properly laundered.

Eyewash stations and safety showers should be readily available in use and handling areas.

Contact lenses pose a special hazard; soft lenses may absorb irritants and all lenses concentrate them.

SECTION 9. SPECIAL PRECAUTIONS AND COMMENTS

STORAGE SEGREGATION: Store in a cool, dry, well-ventilated area away from oxidizing agents, heat, sparks, or open flame. Storage areas must meet OSHA requirements for class IB flammable liquids. Use metal safety cans for handling small amounts. Protect containers from physical damage. Use only with adequate ventilation. Avoid contact with eyes, skin, or clothing. Do not inhale or ingest. Use caution when handling this compound because it can be absorbed through intact skin in toxic amounts. SPECIAL HANDLING/STORAGE: Ground and bond metal containers and equipment to prevent static sparks when making transfers. Do not smoke in use or storage areas. Use nonsparking tools. ENGINEERING CONTROLS: Preplacement and periodic medical exams emphasizing the liver, kidneys, nervous system, lungs, heart, and blood should be provided. Workers exposed to concentrations greater than the action level (50 ppm) should be examined at least once a year. Use of alcohol can aggravate the toxic effects of toluene.
COMMENTS: Emptied containers contain product residues. Handle accordingly!
Toluene is designated as a hazardous substance by the EPA (40 CFR 116). DOT Classification: Flammable liquid. UN1294.
Data Source(s) Code: 1-9, 12, 16, 20, 21, 24, 26, 34, 81, 82. CR

Judgements as to the suitability of information herein for purchaser's purposes are necessarily purchaser's responsibility. Therefore, although reasonable care has been taken in the preparation of such information, Genium Publishing Corp. extends no warranties, makes no representations and assumes no responsibility as to the accuracy or suitability of such information for application to purchaser's intended purposes or for consequences of its use.

Approvals J.O. Accrocco, 11/86.
Indust. Hygiene/Safety DW 10-86
Medical Review [signature] Oct 86

Copyright © 1986 Genium Publishing Corporation.
Any commercial use or reproduction without the publisher's permission is prohibited.

Copyright © April 1, 1986

Material Safety Data Sheet

From Genium's Reference Collection
Genium Publishing Corporation
1145 Catalyn Street
Schenectady, NY 12303-1836 USA
(518) 377-8855

GENIUM PUBLISHING CORP.

No. 315

CHLOROFORM
(Revision D)
Issued: August 1979
Revised: April 1988

SECTION 1. MATERIAL IDENTIFICATION 25

Material Name: CHLOROFORM

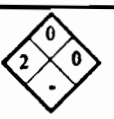

Description (Origin/Uses): Used as a solvent for fats, oils, rubber, alkaloids, waxes, and resins; as a cleansing agent.

Other Designations: Trichloromethane; $CHCl_3$; NIOSH *RTECS* No. FS9100000; CAS No. 0067-66-3

Manufacturer: Contact your supplier or distributor. Consult the latest edition of the *Chemicalweek Buyers' Guide* (Genium ref. 73) for a list of suppliers.

HMIS			
H	2		
F	0	R	1
R	0	I	3
PPG*		S	2
*See sect. 8		K	0

SECTION 2. INGREDIENTS AND HAZARDS

	%	EXPOSURE LIMITS
Chloroform, CAS No. 0067-66-3	Ca 100	**OSHA PEL** Ceiling: 50 ppm, 240 mg/m³ **ACGIH TLV, 1987-88** TLV-TWA: 10 ppm, 50 mg/m³ **NIOSH REL** Ceiling: 2 ppm, 9.78 mg/m³ **Toxicity Data*** Human, Oral, LD_{Lo}: 140 mg/kg Rat, Oral, LD_{50}: 908 mg/kg
*See NIOSH, *RTECS*, for additional toxicity data with references to mutagenic, reproductive, tumorigenic, and irritative effects.		

SECTION 3. PHYSICAL DATA

Boiling Point: 142°F (61°C)
Melting Point: -82.3°F (-63.5°C)
Vapor Pressure: 158.4 Torrs at 68°F (20°C)
Vapor Density (Air = 1): 4.13

Water Solubility (%): 0.822 ml of $CHCl_3$ per 100 ml of H_2O at 68°F (20°C)
% Volatile by Volume: 100
Molecular Weight: 119 Grams/Mole
Specific Gravity (H_2O = 1): 1.484 at 68°F (20°C)

Appearance and Odor: A heavy, colorless, clear, volatile liquid; characteristic, pleasant, ethereal, sweet odor (recognition threshold: 0.3 mg/m³); sweet taste.

SECTION 4. FIRE AND EXPLOSION DATA

Flash Point and Method	Autoignition Temperature	Flammability Limits in Air	LOWER	UPPER
*	*	% by Volume	*	*

Extinguishing Media: *Chloroform does not burn. Use an agent that will put out the surrounding fire.

Unusual Fire or Explosion Hazards: None reported.

Special Fire-fighting Procedures: Wear a self-contained breathing apparatus (SCBA) with a full facepiece operated in the pressure-demand or positive-pressure mode.

SECTION 5. REACTIVITY DATA

Chloroform is stable if kept in closed containers and protected from air and sunlight. It does not undergo hazardous polymerization; however, even when stabilized with ethanol, this material develops acidity from prolonged exposure to air and light.

Chemical Incompatibilities: This material is incompatible with strong alkalies.

Conditions to Avoid: Avoid prolonged exposure to air and light and to strong alkalies.

Hazardous Products of Decomposition: Toxic and corrosive gases like hydrochloric acid (HCl), chlorine (Cl_2), carbon monoxide (CO), and oxides of chlorine (ClO_x) can be produced during fires.

Copyright © 1988 Genium Publishing Corporation.

SECTION 6. HEALTH HAZARD INFORMATION

Chloroform is listed as a suspected human carcinogen by ACGIH.

Summary of Risks: Exposure to this material affects the central nervous system (anesthesia); heart (arrhythmia, ventricular tachycardia, bradycardia); liver (necrosis, hepatoma); kidney (necrosis); and it is an embryonic toxin. Fatalities are associated with cardiovascular depression and ventricular fibrillation.
Medical Conditions Aggravated by Long-Term Exposure: Ailments of the heart, liver, and kidneys may be worsened by exposure to chloroform. **Target Organs:** Liver, kidneys, heart, skin, eyes. **Primary Entry:** Skin contact, inhalation.
Acute Effects: Dizziness, mental dullness, nausea, headache, fatigue, and anesthesia. **Chronic Effects:** Possible cancer.
FIRST AID
Eyes: Immediately flush eyes, including under the eyelids, gently but thoroughly with plenty of running water for at least 15 minutes.
Skin: Immediately wash the affected area with soap and water. **Inhalation:** Remove the exposed person to fresh air; restore and/or support his or her breathing as needed.
Ingestion: Never give anything by mouth to someone who is unconscious or convulsing. If the exposed person is responsive, give him or her several glasses of milk or water to drink and induce vomiting. Repeat if large quantities were ingested.
Comments: Workers who are regularly exposed to chloroform require preplacement and periodic medical exams emphasizing kidney, liver, skin, and central nervous system functions. Carefully evaluate each exposure that produces a noticeable effect to determine the extent to which factors like alcohol or drugs have affected it.

GET MEDICAL HELP (IN PLANT, PARAMEDIC, COMMUNITY) FOR ALL EXPOSURES. Seek prompt medical assistance for further treatment, observation, and support after first aid.

SECTION 7. SPILL, LEAK, AND DISPOSAL PROCEDURES

Spill/Leak: Notify safety personnel of a chloroform spill or leak. Provide ventilation. Cleanup personnel need protection against contact with and inhalation of vapor (see sect. 8). Chloroform vapor is heavier than air and will collect in low-lying areas. Contain large spills and collect waste or absorb it with an inert material such as sand, earth, or vermiculite. Place waste liquid or absorbent into closable containers for disposal. Keep waste out of sewers, watersheds, and waterways.
Waste Disposal: Contact your supplier or a licensed contractor for detailed recommendations. Follow Federal, state, and local regulations.
OSHA Designations
Air Contaminant (29 CFR 1910.1000 Subpart Z)
EPA Designations (40 CFR 302.4)
RCRA Hazardous Waste, No. U044
CERCLA Hazardous Substance, Reportable Quantity: 5000 lbs (2270 kg)

SECTION 8. SPECIAL PROTECTION INFORMATION

Goggles: Always wear protective eyeglasses or chemical safety goggles. Where splashing is possible, wear a full face shield as a supplementary protective measure. Follow the eye- and face-protection guidelines in 29 CFR 1910.133. **Respirator:** Wear a NIOSH-approved respirator per the *NIOSH Pocket Guide to Chemical Hazards* for the maximum-use concentrations and/or the exposure limits cited in section 2. Follow the respirator guidelines in 29 CFR 1910.134. For emergency or nonroutine use (e.g., cleaning reactor vessels or storage tanks), wear an SCBA with a full facepiece operated in the pressure-demand or positive-pressure mode. **Warning:** Air-purifying respirators will *not* protect workers in oxygen-deficient atmospheres. **Other:** To prevent contact with skin, wear impervious gloves, boots, aprons, gauntlets, etc., as required by the specific work environment. **Ventilation:** Install and operate general and local ventilation systems that are powerful enough to maintain airborne levels of chloroform below the OSHA PEL standard cited in section 2.
Safety Stations: Make eyewash stations, washing facilities, and safety showers available in use and handling areas. **Contaminated Equipment:** Contact lenses pose a special hazard; soft lenses may absorb irritants and all lenses concentrate them. Do *not* wear contact lenses in any work area. Remove contaminated clothing and launder it before wearing it again; clean this material from shoes and equipment. **Comments:** Practice good personal hygiene; always wash thoroughly after using this material. Keep it off of your clothing and equipment. Avoid transferring it from your hands to your mouth while eating, drinking, or smoking. Do *not* eat, drink, or smoke in any work area. Avoid inhalation of vapor!

SECTION 9. SPECIAL PRECAUTIONS AND COMMENTS

Storage/Segregation: Store chloroform in closed containers away from light and alkalies.

Special Handling/Storage: Protect containers from physical damage. Do not transfer chloroform through plastic or rubber hoses or pipes.

Transportation Data (49 CFR 172.101-2)

DOT Shipping Name: Chloroform	**DOT Label:** None	**IMO Label:** Poison
DOT Class: ORM-A	**DOT ID No.** UN1888	**IMO Class:** 6.1

References: 1, 2, 12, 73, 84-94, 100, 103.

Judgments as to the suitability of information herein for purchaser's purposes are necessarily purchaser's responsibility. Therefore, although reasonable care has been taken in the preparation of such information, Genium Publishing Corp. extends no warranties, makes no representations and assumes no responsibility as to the accuracy or suitability of such information for application to purchaser's intended purposes or for consequences of its use.

Prepared by PJ Igoe, BS
Industrial Hygiene Review: DJ Wilson, CIH
Medical Review: MJ Hardies, MD

Copyright © 1988 Genium Publishing Corporation.
Any commercial use or reproduction without the publisher's permission is prohibited.

Material Safety Data Sheet

From Genium's Reference Collection
Genium Publishing Corporation
1145 Catalyn Street
Schenectady, NY 12303-1836 USA
(518) 377-8855

GENIUM PUBLISHING CORP.

No. 318

XYLENE (Mixed Isomers)
(Revision D)
Issued: November 1980
Revised: August 1988

SECTION 1. MATERIAL IDENTIFICATION

Material Name: XYLENE (Mixed Isomers)

Description (Origin/Uses): Used as a raw material for the production of benzoic acid, phthalic anhydride, isophthalic and terephthalic acids and their dimethyl esters in the manufacture of polyester fibers; in sterilizing catgut; with Canadian balsam as oil-immersion in microscopy; and as a cleaning agent in microscopic techniques.

Other Designations: Dimethylbenzene; Xylol; C_8H_{10}; CAS No. 1330-20-7

Manufacturer: Contact your supplier or distributor. Consult the latest edition of the *Chemicalweek Buyers' Guide* (Genium ref. 73) for a list of suppliers.

Comments: Although there are three different isomers of xylene (*ortho*, *meta*, and *para*), the health and physical hazards of all three isomers are very similar. This MSDS is written for a xylene mixture of all three isomers, which is usually commercial xylene.

NFPA

HMIS	
H 2	R 1
F 3	I 3
R 0	S 2
PPG*	K 3
*See sect. 8	

SECTION 2. INGREDIENTS AND HAZARDS

Xylene (Mixed Isomers), CAS No. 1330-20-7*

*o-Xylene, CAS No. 0095-47-6
m-Xylene, CAS No. 0108-38-3
p-Xylene, CAS No. 0106-42-3

**Check with your supplier to determine if there are additions, contaminants, or impurities (such as benzene) that are present in reportable quantities per 29 CFR 1910.

***Immediately dangerous to life and health.

**** See NIOSH, *RTECS* (No. ZE2100000), for additional data with references to reproductive, irritative, and mutagenic effects.

%
**

EXPOSURE LIMITS

IDLH*** Level: 1000 ppm

OSHA PEL
8-Hr TWA: 100 ppm, 435 mg/m³

ACGIH TLVs, 1987-88
TLV-TWA: 100 ppm, 435 mg/m³
TLV-STEL: 150 ppm, 655 mg/m³

Toxicity Data**
Human, Inhalation, TC_{Lo}: 200 ppm
Man, Inhalation, LC_{Lo}: 10000 ppm/6 Hrs
Rat, Oral, LD_{50}: 4300 mg/kg

SECTION 3. PHYSICAL DATA

Boiling Point: 275°F to 293°F (135°C to 145°C)*
Melting Point: -13°F (-25°C)
Evaporation Rate: 0.6 Relative to BuAc = 1
Specific Gravity (H_2O = 1): 0.86

Water Solubility (%): Insoluble
Molecular Weight: 106 Grams/Mole
% Volatile by Volume: Ca 100
Vapor Pressure: 7 to 9 Torrs at 68°F (20°C)
Vapor Density (Air = 1): 3.7

Appearance and Odor: A clear liquid; aromatic hydrocarbon odor.

*Materials with wider and narrower boiling ranges are commercially available.

SECTION 4. FIRE AND EXPLOSION DATA

Flash Point and Method	Autoignition Temperature	Flammability Limits in Air	LOWER	UPPER
81°F to 90°F (27°C to 32°C)	867°F (464°C)	% by Volume	1%	7%

Extinguishing Media: Use foam, dry chemical, or carbon dioxide. Use water sprays to reduce the rate of burning and to cool containers.

Unusual Fire or Explosion Hazards: Xylene vapor is heavier than air and may travel a considerable distance to a low-lying source of ignition and flash back.

Special Fire-fighting Procedures: Wear a self-contained breathing apparatus (SCBA) with a full facepiece operated in the pressure-demand or positive-pressure mode.

SECTION 5. REACTIVITY DATA

Xylene is stable in closed containers during routine operations. It does not undergo hazardous polymerization.

Chemical Incompatibilities: This material may react dangerously with strong oxidizers.

Conditions to Avoid: Avoid any exposure to sources of ignition and to strong oxidizers.

Hazardous Products of Decomposition: Carbon monoxide (CO) may be evolved during xylene fires.

SECTION 6. HEALTH HAZARD INFORMATION

Xylene is not listed as a carcinogen by the IARC, NTP, or OSHA.

Summary of Risks: Liquid xylene is a skin irritant and causes erythema, dryness, and defatting; prolonged contact may cause blistering. Inhaling xylene can depress the central nervous system (CNS), and ingesting it can result in gastrointestinal disturbance; and possibly hematemesis (vomiting blood). Effects on the eyes, kidneys, liver, lungs, and the CNS are also reported. **Medical Conditions Aggravated by Long-Term Exposure:** Problems with eyes, skin, central nervous system, kidneys, and liver may be worsened by exposure to xylene. **Target Organs:** CNS, eyes, gastrointestinal tract, blood, liver, kidneys, skin. **Primary Entry:** Inhalation, skin contact/absorption. **Acute Effects:** Dizziness; excitement; drowsiness; incoordination; staggering gait; irritation of eyes, nose, and throat; corneal vacuolization; anorexia; nausea; vomiting; abdominal pain; and dermatitis. **Chronic Effects:** Reversible eye damage, headache, loss of appetite, nervousness, pale skin, and skin rash.

FIRST AID: Eyes. Immediately flush eyes, including under the eyelids, gently but thoroughly with plenty of running water for at least 15 minutes. **Skin.** Immediately wash the affected area with soap and water. **Inhalation.** Remove the exposed person to fresh air; restore and/or support his or her breathing as needed. Have a trained person administer oxygen. **Ingestion.** Never give anything by mouth to someone who is unconscious or convulsing. Vomiting may occur spontaneously, but do not induce it. If vomiting should occur, keep exposed person's head below his or her hips to prevent aspiration (breathing the liquid xylene into the lungs). Severe hemorrhagic pneumonitis with grave, possibly fatal, pulmonary injury can occur from aspiring very small quantities of xylene.

GET MEDICAL HELP (IN PLANT, PARAMEDIC, COMMUNITY) FOR ALL EXPOSURES. Seek prompt medical assistance for further treatment, observation, and support after first aid. If exposure is severe, hospitilization for at least 72 hours with careful monitoring for delayed onset of pulmonary edema is recommended.

SECTION 7. SPILL, LEAK, AND DISPOSAL PROCEDURES

Spill/Leak: Notify safety personnel, provide ventilation, and eliminate all sources of ignition immediately. Cleanup personnel need protection against contact with and inhalation of xylene vapor (see sect. 8). Contain large spills and collect waste or absorb it with an inert material such as sand, earth, or vermiculite. Use nonsparking tools to place waste liquid or absorbent into closable containers for disposal. Keep waste out of sewers, watersheds, and waterways.

Waste Disposal: Contact your supplier or a licensed contractor for detailed recommendations. Follow Federal, state, and local regulations.

OSHA Designations

Air Contaminant (29 CFR 1910.1000 Subpart Z)

EPA Designations (40 CFR 302.4)

RCRA Hazardous Waste, No. U239

CERCLA Hazardous Substance, Reportable Quantity: 1000 lbs (454 kg), per the Clean Water Act (CWA), section 311 (b) (9)

SECTION 8. SPECIAL PROTECTION INFORMATION

Goggles: Always wear protective eyeglasses or chemical safety goggles. Where splashing is possible, wear a full face shield as a supplementary protective measure. Follow OSHA eye- and face-protection regulations (29 CFR 1910.133). **Respirator:** Use a NIOSH-approved respirator per the *NIOSH Pocket Guide to Chemical Hazards* for the maximum-use concentrations and/or the exposure limits cited in section 2. Follow OSHA respirator regulations (29 CFR 1910.134). For emergency or nonroutine use (leaks or cleaning reactor vessels and storage tanks), wear an SCBA with a full facepiece operated in the pressure-demand or positive-pressure mode. **Warning:** Air-purifying respirators will *not* protect workers in oxygen-deficient atmospheres. **Other:** Wear impervious gloves, boots, aprons, gauntlets, etc., as required by the specifics of the work operation to prevent prolonged or repeated skin contact with xylene. **Ventilation:** Install and operate general and local maximum, explosion-proof ventilation systems powerful enough to maintain airborne levels of xylene below the OSHA PEL standard cited in section 2. Local exhaust ventilation is preferred because it prevents dispersion of xylene into general work areas by eliminating it at its source. Consult the latest edition of Genium reference 103 for detailed recommendations. **Safety Stations:** Make eyewash stations, safety/quick-drench showers, and washing facilities available in areas of use and handling. **Contaminated Equipment:** Contact lenses pose a special hazard; soft lenses may absorb irritants and all lenses concentrate them. Do *not* wear contact lenses in any work area. Remove contaminated clothing and launder it before wearing it again; clean xylene from shoes and equipment. **Comments:** Practice good personal hygiene; always wash thoroughly after using this material. Keep it off of your clothing and equipment. Avoid transferring it from your hands to your mouth while eating, drinking, or smoking. Do *not* eat, drink, or smoke in any work area. Do not inhale xylene vapor.

SECTION 9. SPECIAL PRECAUTIONS AND COMMENTS

Storage/Segregation: Store xylene in a cool, dry, well-ventilated area away from sources of ignition and strong oxidizers. Protect containers from physical damage.

Special Handling/Storage: Make sure all engineering systems (production, transportation) are of maximum explosion-proof design. Ground and bond all containers, pipelines, etc., used in shipping, transferring, reacting, producing, and sampling operations.

Transportation Data (49 CFR 172.101-2)

DOT Shipping Name: Xylene
DOT ID No. UN1307
DOT Label: Flammable Liquid
DOT Hazard Class: Flammable Liquid
IMO Label: Flammable Liquid
IMO Class: 3.2 or 3.3

References: 1, 2, 12, 73, 84-94, 100, 103.

Judgments as to the suitability of information herein for purchaser's purposes are necessarily purchaser's responsibility. Therefore, although reasonable care has been taken in the preparation of such information, Genium Publishing Corp. extends no warranties, makes no representations and assumes no responsibility as to the accuracy or suitability of such information for application to purchaser's intended purposes or for consequences of its use.

Prepared by PJ Igoe, BS

Industrial Hygiene Review: DJ Wilson, CIH

Medical Review: MJ Hardies, MD

Copyright © 1988 Genium Publishing Corporation.
Any commercial use or reproduction without the publisher's permission is prohibited.

Material Safety Data Sheet

From Genium's Reference Collection
Genium Publishing Corporation
1145 Catalyn Street
Schenectady, NY 12303-1836 USA
(518) 377-8855

GENIUM PUBLISHING CORP.

No. 312
TRICHLOROETHYLENE
(Revision E)

Issued: July 1979
Revised: August 1987

SECTION 1. MATERIAL IDENTIFICATION

23

MATERIAL NAME: TRICHLOROETHYLENE

DESCRIPTION (Origin/Uses): Prepared from *sym*-tetrachloroethane by way of eliminating HCl by boiling with lime. Used to manufacture organic chemicals, pharmaceuticals; in degreasing and dry cleaning; and as a solvent for fats, waxes, rubbers, oils, paints, varnishes, ethers, and cellulose esters.

OTHER DESIGNATIONS: Ethylene Trichloride; TCE; Trichloroethene; 1,1,2-Trichloroethylene; C_2HCl_3; NIOSH *RTECS* #KX4550000; CAS #0079-01-6

MANUFACTURER/SUPPLIER: Available from several suppliers, including: Dow Chemical USA, 2020 Dow Center, Midland, MI 48640; Telephone: (517) 636-1000; (800) 258-CHEM

COMMENTS: Trichloroethylene is a toxic solvent and a suspected occupational carcinogen.

HMIS			
H	2		
F	1	R	1
R	1	I	3
PPE*		S	1
* See sect. 8		K	0

SECTION 2. INGREDIENTS AND HAZARDS

Ingredients	%	HAZARD DATA
Trichloroethylene, CAS #0079-01-6; NIOSH *RTECS* #KX4550000	100	ACGIH Values 1987-88 TLV-TWA*: 50 ppm, 270 mg/m^3 TLV-STEL**: 200 ppm, 1080 mg/m^3 OSHA PEL 1986*** 8-Hr TWA: 100 ppm Ceiling: 200 ppm NIOSH REL 1986 10-Hr TWA: 25 ppm TOXICITY DATA Human, Oral, LD_{Lo}: 7 g/kg Human, Inhalation, TC_{Lo}: 6900 mg/m^3 (10 Min) Human, Inhalation, TC_{Lo}: 160 ppm/ 83 Min Human, Inhalation, TD_{Lo}: 812 mg/kg

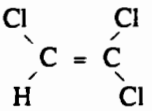

* The TLV-TWA is set to control subjective complaints such as headache, fatigue, and irritability.

** The TLV-STEL is set to prevent incoordination and other beginning anesthetic effects from TCE. These levels should provide a wide margin of safety in preventing liver injury.

*** The OSHA PEL is 300 ppm for 5 minutes in any 2 hours.

SECTION 3. PHYSICAL DATA

Boiling Point ... 188.6°F (87°C)
Vapor Pressure ... 58 Torr at 68°F (20°C)
Water Solubility ... Insoluble
Vapor Density (Air = 1) ... 4.53
Evaporation Rate ... Not Listed
Specific Gravity ... 1.4649 at 68°F (20°C)
Melting Point ... -120.64°F (-84.8°C)
Molecular Weight ... 131.40 Grams/Mole

Appearance and odor: Colorless, nonflammable mobile liquid; sweetish odor like chloroform.

COMMENTS: TCE is highly soluble in lipids. A high vapor pressure at room temperature provides the potential for TCE vapors to contaminate use areas.

SECTION 4. FIRE AND EXPLOSION DATA

Flash Point and Method	Autoignition Temperature	Flammability Limits in Air	LOWER	UPPER
Not Listed	770°F (410°C)	% by Volume	8%	10.5%

EXTINGUISHING MEDIA: TCE has no flash point in a conventional closed tester at room temperature, but it is moderately flammable at higher temperatures. Use dry chemical, carbon dioxide, alcohol foam, or other extinguishing agents suitable for the surrounding fire.

OSHA Flammability Class (29 CFR 1910.106): Not Regulated

UNUSUAL FIRE/EXPLOSION HAZARDS: During fire conditions TCE emits highly toxic and irritating fumes, including hydrochloric acid and phosgene. SPECIAL FIRE-FIGHTING PROCEDURES: Wear a self-contained breathing apparatus with a full facepiece operated in a pressure-demand or another positive-pressure mode. At TCE vapor levels of 300-1000 ppm, fire fighters who lack the proper respiratory equipment may experience incoordination and impaired judgment.

DOT Flammability Class (49 CFR 173.115): Not Regulated

SECTION 5. REACTIVITY DATA

Trichloroethylene is stable. Hazardous polymerization can occur under certain circumstances (see Conditions to Avoid and Comments, below).

CHEMICAL INCOMPATIBILITIES include magnesium or aluminum powder, NaOH, KOH, or other strong alkaline materials. Reactions with alkaline materials may lead to the formation of dangerous explosive mixtures of chloroacetylenes.

CONDITIONS TO AVOID: When TCE is heated (as in the case with vapor degreasers) or exposed to sunlight, it requires extra stabilization against oxidation, degradation, and polymerization. It is slowly decomposed by light when moist.

PRODUCTS OF HAZARDOUS DECOMPOSITION include hydrochloric acid and phosgene under certain conditions at elevated temperatures.

COMMENTS: TCE is stable under normal handling and storage conditions, and hazardous polymerization is not expected to occur. However, failure of the stabilizer at elevated temperatures or other extreme conditions may allow polymerization to take place..

SECTION 6. HEALTH HAZARD INFORMATION

Trichloroethylene is listed as a carcinogen by the NTP, IARC, and OSHA. NIOSH recommends that trichloroethylene be treated as an occupational carcinogen. IARC carcinogenic results are animal suspect, animal positive, and human indefinite. SUMMARY OF RISKS: Moderate exposures to TCE cause symptoms similar to those of alcohol inebriation. Higher concentrations cause narcotic effects. Ventricular fibrillation has been cited as the cause of death following heavy exposures. TCE-induced hepato cellular carcinomas have been detected in mice during tests conducted by the National Cancer Institute (*Chem & Eng News* 54 [April 5, 1976]:4). Organ systems affected by overexposure to TCE are the central nervous system (euphoria, analgesia, anesthesia), degeneration of the liver and kidneys, the lungs (tachypnea), heart (arrhythmia) and skin (irritation, vesication, and paralysis of fingers when immersed in liquid TCE). Contact with the liquid defats the skin, causing topical dermatitis. Certain people appear to experience synergistic effects from TCE exposure concomitant with exposure to caffeine, alcohol, and other drugs. When combined with alcohol intake, toxic effects are increased and may cause a red, blotchy facial and upper body rash commonly called "degreaser's flush." Other reported symptoms of TCE exposure include abnormal fatigue, headache, irritability, gastric disturbances, and intolerance to alcohol. Toxic effects from testing of TCE on humans include hallucination, distorted perception, somnolence (general depressed activity), and jaundice. TARGET ORGANS: Respiratory system, central nervous system, heart, liver, kidneys, and skin. PRIMARY ENTRY: Ingestion, inhalation, skin contact. ACUTE EFFECTS: Headache, vertigo, visual disturbance, tremors, nausea, vomiting, dermatitis, dizziness, drowsiness, and irritation to the eyes, nose, and throat. CHRONIC EFFECTS: None Reported. MEDICAL CONDITIONS AGGRAVATED BY LONG-TERM EXPOSURE: Diseases of the liver, kidneys, lungs, and central nervous system. FIRST AID: EYE CONTACT: Immediately flush eyes, including under the eyelids, gently but thoroughly with plenty of running water for at least 15 minutes. Get medical help.* SKIN CONTACT: Wash thoroughly with soap and water. Remove and launder contaminated clothing before wearing it again; clean material from shoes and equipment. Get medical help.* INHALATION: Remove victim to fresh air; restore and/or support his breathing as needed. Do not give adrenalin to the victim. Get medical help.* INGESTION: Call a poison control center. Never give anything by mouth to someone who is unconscious or convulsing. A professional decision regarding whether or not to induce vomiting is required. Do not give adrenalin to the victim. Get medical help.*

*GET MEDICAL ASSISTANCE = IN PLANT, PARAMEDIC, COMMUNITY. Get prompt medical assistance for further treatment, observation, and support after first aid.

COMMENTS: Workers' responses to TCE vary significantly because of many factors, including age, health status, nutrition, and intake of alcohol, caffeine, and medicines. Do not use these substances before, during, or after exposure to TCE. If a worker displays any of the symptoms of exposure to TCE, thoroughly investigate all the possible contributing factors to determine, if possible, how much the work environment levels of TCE are responsible.

SECTION 7. SPILL, LEAK, AND DISPOSAL PROCEDURES

SPILL/LEAK: Inform safety personnel of any trichloroethylene spill or leak and evacuate the area for large spills. Cleanup personnel must use respiratory and liquid contact protection. Adequate ventilation must be provided. Confine the spilled TCE to as small an area as possible. Do not allow it to run off to sewers or open waterways. Pick up spilled TCE with a vacuum cleaner or an absorbent such as vermiculite.

DISPOSAL: Consider reclamation, recycling, or destruction rather than disposal in a landfill.

Trichloroethylene is designated as a hazardous substance by the EPA (40 CFR 116.4).

Trichloroethylene is reported in the 1983 EPA TSCA Inventory.

EPA Hazardous Waste Number (40 CFR 261.33): U228

EPA Reportable Quantity (40 CFR 117.3): 1000 lbs (454 kgs)

Aquatic Toxicity Rating, TLm 96: Not Listed

SECTION 8. SPECIAL PROTECTION INFORMATION

GOGGLES: Always wear protective eyeglasses or chemical safety goggles. Follow the eye and face protection guidelines of 29 CFR 1910.133. GLOVES: Wear impervious gloves. RESPIRATOR: Use a NIOSH-approved respirator per the *NIOSH Guide to Chemical Hazards* (Genium ref. 88) for the maximum-use concentrations and/or the exposure limits cited in section 2. Follow the respirator guidelines in 29 CFR 1910.134. Any detectable concentration of TCE requires an SCBA, full facepiece, and pressure-demand/positive-pressure modes. WARNING: Air-purifying respirators will not protect workers from oxygen-deficient atmospheres. OTHER EQUIPMENT: Wear rubber boots, aprons, and other suitable body protection appropriate to the existing work environment. VENTILATION: Install and operate general and local exhaust ventilation systems of sufficient power to maintain airborne concentrations of TCE below the OSHA PEL standards cited in section 2. SAFETY STATIONS: Make eyewash stations, washing facilities, and safety showers available in areas of use and handling. Contact lenses pose a special hazard; soft lenses may absorb irritants, and all lenses concentrate them. OTHER SPECIAL MODIFICATIONS IN THE WORKPLACE: Because of the unresolved controversy about the carcinogenic status of TCE, all existing personal protective equipment and engineering technology should be used to prevent any possibility of worker contact with this material.

COMMENTS: Practice good personal hygiene. Keep material off of your clothes and equipment. Avoid transfer of material from hands to mouth while eating, drinking, or smoking. Adhere to the sanitation requirements of 29 CFR 1910.141 and 29 CFR 1910.142.

SECTION 9. SPECIAL PRECAUTIONS AND COMMENTS

STORAGE SEGREGATION: Prevent TCE from coming into contact with strong caustics such as NaOH; KOH; chemically active metal like Ba, Li, Na, Mg, Ti; and powdered aluminum or magnesium in acidic solutions. SPECIAL HANDLING/STORAGE: Store this material in a cool, dry, well-ventilated area. Avoid elevated temperatures because products of toxic and corrosive decomposition from TCE may form. Monitor the level of any stabilizer component that may be added to the TCE. (Consult the technical data from the supplier to determine the specifics of any added stabilizer.) If applicable, follow the supplier's recommendation concerning proper rotation of stock, shelf-life requirements, and levels of stabilizers.

ENGINEERING CONTROLS IN THE WORKPLACE: Avoid collecting aluminum fines (very small particles) or chips in a TCE vapor degreaser. Monitor TCE stabilizer levels regularly. Only trained personnel should operate vapor degreasers.

TRANSPORTATION DATA (per 49 CFR 172.101-2):

DOT Hazard Class: ORM-A	DOT ID No. UN1710	IMO Class: 6.1
IMO Label: St. Andrew's Cross (X)*	DOT Shipping Name: Trichloroethylene	DOT Label: None

* Harmful - Stow away from foodstuffs (IMO Label, Materials of Class 6.1 Packaging Group III).

References: 1-9, 12, 14, 21, 73, 87-94. PI

Judgements as to the suitability of information herein for purchaser's purposes are necessarily purchaser's responsibility. Therefore, although reasonable care has been taken in the preparation of such information, Genium Publishing Corp. extends no warranties, makes no representations and assumes no responsibility as to the accuracy or suitability of such information for application to purchaser's intended purposes or for consequences of its use.

Approvals JO Ricciocco

Indust. Hygiene/Safety

Medical Review 11-18-87

Copyright © 1987 Genium Publishing Corporation.
Any commercial use or reproduction without the publisher's permission is prohibited.

Copyright © August 1, 1987

Material Safety Data Sheet

from Genium's Reference Collection
Genium Publishing Corporation
1145 Catalyn Street
Schenectady, NY 12303-1836 USA
(518) 377-8855

GENIUM PUBLISHING CORP.

No. 310
METHYLENE CHLORIDE
(Revision F)

Issued: September 1985
Revised: November 1988

SECTION 1. MATERIAL IDENTIFICATION

Material Name: METHYLENE CHLORIDE

Description (Origin/Uses): Used widely in paint removers, as a solvent for plastics, as a degreasing agent, in propellant mixtures for aerosol sprays, and as a blowing agent in foams.

Other Designations: Dichloromethane; Freon 30®; Methane Dichloride; Methylene Bichloride; Methylene Dichloride; CH_2Cl_2; CAS No. 0075-09-2

Manufacturer: Contact your supplier or distributor. Consult the latest edition of the *Chemicalweek Buyers' Guide* (Genium ref. 73) for a list of suppliers.

HMIS
H 2
F 1
R 0
PPG*
*See sect. 8

R 1
I 3
S 3
K 1

NFPA

SECTION 2. INGREDIENTS AND HAZARDS/EXPOSURE LIMITS

Methylene Chloride, ca 100%

OSHA PEL
8-Hour TWA: 500 ppm
Ceiling: 1000 ppm Acceptable Maximum Peak above the Ceiling: 2000 ppm for 5 Minutes in Any 2-Hour Period

ACGIH TLV, 1988-89
TLV-TWA: 50 ppm, 175 mg/m³
(Adopted 1988-89)

Toxicity Data*
Rat, Oral, LD_{50}: 2136 mg/kg
Human, Inhalation, TC_{Lo}: 500 ppm (8 Hours)

*See NIOSH, *RTECS* (PA8050000), for additional data with references to irritative, reproductive, mutagenic, and tumorigenic effects.

SECTION 3. PHYSICAL DATA

Boiling Point: 103.55°F (39.75°C) at 76 Torrs
Melting Point: -142°F (-96.7°C)
Vapor Density (Air = 1): 2.9
Vapor Pressure: 440 Torrs at 77°F (25°C)

Molecular Weight: 84.94 Grams/Mole
Solubility in Water (%): 1% by Weight
Specific Gravity (H_2O = 1): 1.3255 at 68°F (20°C)
% Volatile by Volume: Ca 100

Appearance and Odor: A clear, colorless, volatile liquid; distinctive, penetrating, ethereal odor. The odor will not serve as a useful warning property because concentrations of 100 ppm are not easily perceptible. Most persons can detect this odor at above 300 ppm.

SECTION 4. FIRE AND EXPLOSION DATA

Flash Point*	Autoignition Temperature: 1033°F (556°C)	LEL: 12% v/v	UEL: 19% v/v

Extinguishing Media: *Methylene chloride is not flammable under ordinary conditions. However, flammable vapor-air mixtures can form at approximately 212°F (100°C). Use water spray to cool fire-exposed containers and to flush spills away from exposures. Use extinguishing agents that will put out the surrounding fire. **Unusual Fire or Explosion Hazards:** Methylene chloride vapor is heavier than air and may collect and concentrate in low-lying, confined spaces. The high vapor pressure of methylene chloride means that when it is spilled, its vapor concentration in air can increase rapidly. If this vapor is heated, an explosion hazard is associated with the vapor-air mixture. Containers of this material may rupture violently if they are involved in fires. **Special Fire-fighting Procedures:** Wear a self-contained breathing apparatus (SCBA) with a full facepiece operated in the pressure-demand or positive-pressure mode.

SECTION 5. REACTIVITY DATA

Stability/Polymerization: Methylene chloride is stable in closed containers during routine operations. Hazardous polymerization cannot occur. **Chemical Incompatibilities:** Methylene chloride can react dangerously with nitrogen tetroxide, liquid oxygen, potassium, sodium, sodium-potassium alloys, lithium, potassium hydroxide with N-methyl-N-nitroso urea, potassium *t*-butoxide, and finely powdered aluminum and magnesium. **Conditions to Avoid:** Avoid all exposure to sources of ignition, heat, and incompatible chemicals. Prolonged exposure to water may cause hydrolysis to highly corrosive hydrochloric acid when the temperature is above 140°F (60°C). In oxygen-enriched atmospheres or when heated (>212°F [100°C]), methylene chloride vapor can be readily ignited. **Hazardous Products of Decomposition:** Exposure to high temperature (from open flame, hot surfaces, uninsulated steam lines, welding arcs, etc.) can produce toxic and corrosive thermal-oxidative products of decomposition such as hydrogen chloride, carbon monoxide, and even small quantities of phosgene gas, which is extremely poisonous.

SECTION 6. HEALTH HAZARD INFORMATION

Carcinogenicity: Methylene chloride is listed as a suspected human carcinogen by the ACGIH (which classifies it as a group A2 carcinogen). **Summary of Risks:** Accidental contact of liquid methylene chloride with skin or eyes causes painful irritation and possible burns if not promptly removed. Exposure by way of contaminated gloves, clothing, or paint remover formulations can produce these same irritant effects. Long-term exposure to mild or moderate doses of methylene chloride may cause a delayed (24 to 48 hours) onset of dizziness, headache, mental confusion, slurred speech, double vision, and sleeplessness. Medical recovery can be slow. Overexposure to methylene chloride can cause elevated levels of carboxy hemoglobin in the blood (this same effect results from overexposure to carbon monoxide). **Medical Conditions Aggravated by Long-Term Exposure:** None reported. **Target Organs:** Skin, eyes, respiratory system, CNS, liver, kidneys, and blood. **Primary Entry:** Inhalation, skin contact/absorption. **Acute Effects:** Headache, giddiness, stupor, irritability, fatigue, tingling in the limbs, and narcosis that is not usually fatal if the exposure is terminated before anesthetic death occurs. **Chronic Effects:** The ACGIH classification of this material as a suspected human carcinogen implies that cancer is a possible effect of chronic exposure to methylene chloride. **FIRST AID: Eyes.** Immediately flush eyes, including under the eyelids, gently but thoroughly with

SECTION 6. HEALTH HAZARD INFORMATION, cont.

flooding amounts of running water for at least 15 minutes. **Skin.** Rinse the affected area with flooding amounts of water and then wash it with soap and water. **Inhalation.** Remove the exposed person to fresh air; restore and/or support his or her breathing as needed. Have qualified medical personnel administer oxygen as required. **Note to Attending Physician:** Do not administer adrenalin. **Ingestion.** Unlikely. Should this type of exposure occur, do not induce vomiting because of the danger of aspiration. If spontaneous vomiting should occur, position the exposed person's head below his or her trunk to resist aspiration. **Get medical help (in plant, paramedic, community) for all exposures.** Seek prompt medical assistance for further treatment, observation, and support after first aid. **Note to Physician:** Absorbed methylene chloride is stored in body fat and metabolizes to carbon monoxide. This produced carbon monoxide increases and sustains carboxyhemoglobin levels in the blood, which concommitantly reduces the oxygen-carrying capacity of the blood. NIOSH advises preplacement and annual medical exams that emphasize liver, kidney, eye, skin, CNS, and respiratory system functions and a complete blood count. Simultaneous exposure to tobacco smoke, alcohol, and carbon monoxide, along with heavy manual labor, increases the body burden of a worker as well as the toxic hazards of the methylene chloride. In significant exposures, serum methylene chloride levels are of no clinical importance. Neurologic and hepatic status as well as carboxy hemoglobin should be monitored.

SECTION 7. SPILL, LEAK, AND DISPOSAL PROCEDURES

Spill/Leak: Notify safety personnel, evacuate unnecessary personnel, eliminate all sources of ignition immediately, and provide adequate explosion-proof ventilation. Cleanup personnel need protection against this liquid's contact with the skin or eyes as well as inhalation of its vapor. Contain large spills and collect waste or absorb it with an inert material such as sand, earth, or vermiculite. Use nonsparking tools to place waste liquid or absorbent into closable containers for disposal. Keep waste out of sewers, watersheds, and waterways. **Waste Disposal:** Contact your supplier or a licensed contractor for detailed recommendations. Follow Federal, state, and local regulations.

OSHA Designations
Listed as an Air Contaminant (29 CFR 1910.1000 Subpart Z).
EPA Designations (40 CFR 302.4)
RCRA Hazardous Waste, NO. U080
CERCLA Hazardous Substance, Reportable Quantity: 1000 lbs (454 kg), per the Clean Water Act (CWA), § 307 (a), and the Resource Conservation and Recovery Act (RCRA), § 3001.

SECTION 8. SPECIAL PROTECTION INFORMATION

Goggles: Always wear protective eyeglasses or chemical safety goggles. Where splashing is possible, wear a full face shield. Follow OSHA eye- and face-protection regulations (29 CFR 1910.133). **Respirator:** Use a NIOSH-approved respirator per Genium reference 88 for the maximum-use concentrations and/or exposure limits cited in section 2. Follow OSHA respirator regulations (29 CFR 1910.134). For emergency or nonroutine operations (spills or cleaning reactor vessels and storage tanks), wear an SCBA. **Warning:** Air-purifying respirators will *not* protect workers in oxygen-deficient atmospheres. **Other:** Wear impervious neoprene, PVA, or Viton gloves, boots, aprons, and gauntlets, etc., to prevent any skin contact with liquid methylene chloride. **Ventilation:** Install and operate general and local maximum, explosion-proof ventilation systems powerful enough to maintain airborne levels of acetone below the exposure limits cited in section 2. Local exhaust ventilation is preferred because it prevents dispersion of the contaminant into the general work area by eliminating it at its source. Consult the latest edition of Genium reference 103 for detailed recommendations. Floor or sump ventilation may be necessary. **Safety Stations:** Make emergency eyewash stations, safety/quick-drench showers, and washing facilities available in work areas. **Contaminated Equipment:** Contact lenses pose a special hazard; soft lenses may absorb irritants, and all lenses concentrate them. Do *not* wear contact lenses in any work area. Remove contaminated clothing and launder it before wearing it again; clean this material from shoes and equipment. **Other:** Because the health effects of carbon monoxide and methylene chloride are additive (see sect. 6), workplaces should be equipped with automatic sensing equipment that identifies workroom atmospheric levels of both of these materials. **Comments:** Practice good personal hygiene; always wash thoroughly after using this material and before eating, drinking, smoking, using the toilet, or applying cosmetics. Keep it off your clothing and equipment. Avoid transferring it from your hands to your mouth while eating, drinking, or smoking. Do *not* eat, drink, or smoke in any work area. Do not inhale methylene chloride vapor.

SECTION 9. SPECIAL PRECAUTIONS AND COMMENTS

Storage/Segregation: Store methylene chloride in closed, moisture-proof containers in a cool, dry, well-ventilated area away from sources of ignition, strong oxidizers, caustics, and incompatible chemicals (see sect. 5). Protect containers from physical damage. **Special Handling/Storage:** Prevent moist air from entering storage containers. Provide ventilation at the floor level in storage areas because methylene chloride vapor is denser than air. Installation of a dryer and a safety seal on each tank is recommended. Aluminum is not recommended for use as a storage material; appropriate storage materials include galvanized iron, black iron, or steel. **Engineering Controls:** Make sure all engineering systems (production, transportation) are of maximum explosion-proof design. Electrically ground and bond all containers and pipelines used in shipping, transferring, reacting, production, and sampling operations to prevent generating static sparks.

Transportation Data (49 CFR 172.101-2)
DOT Shipping Name: Dichloromethane *or* Methylene Chloride
DOT Hazard Class: ORM-A
ID No. UN1593
DOT Packaging Requirements: 49 CFR 173.605
DOT Packaging Exceptions: 49 CFR 173.505

IMO Shipping Name: Dichloromethane
IMO Hazard Class: 6.1
IMO Label: Saint Andrew's Cross (X)*
IMDG Packaging Group: III

*Harmful-Stow away from Foodstuffs.

References: 1, 26, 38, 84-94, 100, 116, 117, 120, 122.

Judgments as to the suitability of information herein for purchaser's purposes are necessarily purchaser's responsibility. Therefore, although reasonable care has been taken in the preparation of such information, Genium Publishing Corp. extends no warranties, makes no representations and assumes no responsibility as to the accuracy or suitability of such information for application to purchaser's intended purposes or for consequences of its use.

Prepared by PJ Igoe, BS
Industrial Hygiene Review: DJ Wilson, CIH
Medical Review: MJ Hardies, MD

Copyright © 1988 Genium Publishing Corporation
Any commercial use or reproduction without the publisher's permission is prohibited

Genium Publishing Corporation
1145 Catalyn Street
Schenectady, NY 12303-1836 USA
(518) 377-8854

Material Safety Data Sheets Collection:

Sheet No. 708
Vinylidene Chloride

Issued: 4/90

Section 1. Material Identification

Vinylidene Chloride Description: Prepared from ethylene chloride. Also prepared from vinyl chloride by successive chlorination and dehydrochlorination steps. Used primarily as a co-monomer in producing vinylidene copolymers (Saran®, Velon®) for films and coatings. Also used in producing methyl chloroform, vinyl chloride resins, plastics, chloracetyl chloride; in adhesives; as a component of synthetic fibers; a chemical intermediate in vinylidene fluoride synthesis; and for 1,1,1-trichloroethane. A common constituent in our environment, measurable quantities of vinylidene chloride are found in poorly ventilated areas with a high concentration of plastics. It is a notable contaminant in recycled air environments such as nuclear submarines and spacecraft.
Other Designations: CAS No. 0075-35-4; $C_2H_2Cl_2$; 1,1-DCE; 1,1-dichloroethene; *asym*-dichloroethylene; VDC; vinylidene dichloride.
Manufacturer: Contact your supplier or distributor. Consult the latest *Chemicalweek Buyers' Guide*(TM) for a suppliers list.
Comment: At temperatures above 32 °F/0 °C and especially in the presence of oxygen or other suitable catalysts, vinylidene chloride polymerizes to a plastic. Therefore, commercial products may contain small proportions of inhibitors to preserve the monomer.

R 3
I 4
S 2
K 4

NFPA

HMIS
H 2
F 4
R 2
PPG*
* Sec. 8

Section 2. Ingredients and Occupational Exposure Limits

Vinylidene chloride, ca 100%

OSHA PEL
8-hr TWA: 1 ppm, 4 mg/m³

ACGIH TLVs, 1989-90
TLV-TWA: 5 ppm, 20 mg/m³
TLV-STEL: 20 ppm, 79 mg/m³

NIOSH REL, 1987
None established

Toxicity Data*
Mouse, skin, TD_{Lo}: 4840 mg/kg has tumorigenic effects on skin, appendages, lungs, thorax, and respiration
Rat, inhalation, LC_{50}: 6350 ppm/4 hr
Human, inhalation, TC_{Lo}: 25 ppm produces changes in behavior (general anesthetic), the liver, kidney, ureter, and bladder

* See NIOSH, *RTECS* (YZ8061000), for additional mutative, reproductive, tumorigenic, and toxicity data.

Section 3. Physical Data

Boiling Point: 89.1 °F/31.7 °C at 760 mm Hg
Melting Point: -188.5 °F/-122.5 °C
Vapor Pressure: 591 mm Hg at 77 °F/25 °C
Vapor Density (Air = 1): 3.4
Molecular Weight: 96.94 g/mol
Specific Gravity (H_2O = 1 at 39 °F/4 °C): 1.2129 at 68 °F/20 °C
Water Solubility: Sparingly soluble (0.04 % wt/vol in water at 68 °F/20 °C)

Appearance and Odor: Colorless, volatile liquid with a mild, sweet odor that resembles chloroform. Most persons can detect vinylidene chloride at 1000 ppm, but others can detect it at less than 500 ppm. Neither odor is adequate to warn of excessive exposure.

Section 4. Fire and Explosion Data

Flash Point: -19 °F/-28 °C	Autoignition Temperature: 1058 °F/570 °C	LEL: 5.6% v/v	UEL: 11.4% v/v

Extinguishing Media: Use dry chemical, alcohol foam, or carbon dioxide. Use water to cool fire-exposed containers.
Unusual Fire or Explosion Hazards: Vinylidene chloride is a very flammable and volatile liquid with a burning rate of 2.7 mm/min. This material is a very dangerous fire hazard and moderately explosive when exposed to heat or flame. It may explode spontaneously since the vapor forms explosive mixtures with air. At elevated temperatures, polymerization may take place and containers may rupture.
Special Fire-fighting Procedures: Since vinylidene chloride may be poisonous if inhaled or absorbed through the skin, wear a self-contained breathing apparatus (SCBA) with a full facepiece operated in the pressure-demand or positive-pressure mode with a fully encapsulating suit. Keep unnecessary people away from the hazard area. Vapors may travel to an ignition source and flash back. Be aware of runoff from fire control methods. Do not release to sewers or waterways.

Section 5. Reactivity Data

Stability/Polymerization: Vinylidene chloride is self-reactive. If stored between -40 °F/-40 °C and 77 °F/25 °C in air without an inhibitor, this material rapidly absorbs oxygen and forms a violently explosive peroxide. The heat of polymerization is -185 cal/g (inhibited). When unstable, vinylidene chloride decomposes into chlorine, hydrogen chloride, phosgene, and formaldehyde. Hazardous polymerization can occur if exposed to sunlight, air, copper, aluminum, or heat.
Chemical Incompatibilities: This material reacts violently with chlorosulfonic acid, nitric acid, and oleum; and vigorously with oxidizing materials.
Hazardous Products of Decomposition: Thermal oxidative decomposition of vinylidene chloride can produce highly toxic fumes of chlorine (Cl_2) and hydrogen chloride (HCl).

Copyright © 1990 Genium Publishing Corporation.
Any commercial use or reproduction without the publisher's permission is prohibited.

Section 6. Health Hazard Data

Carcinogenicity: Neither the NTP, IARC, nor OSHA lists vinylidene chloride as a carcinogen, although the ACGIH suggests it is a suspected carcinogen. Various animal studies suggest a high rate of cancer in species-specific testing; application to humans does not appear valid.
Summary of Risks: Vinylidene chloride is an irritant to the skin, eyes, and mucous membranes, although any inhibitor in vinylidene chloride may partly cause the irritation. VDC is narcotic at concentrations greater than 4000 ppm, and has caused liver and kidney injury in experimental animals. Solutions containing the inhibitor MEHQ (monomethyl ether of hydroquinone) may cause leucoderma (white skin) and serious eye injury.
Medical Conditions Aggravated by Long-Term Exposure: None reported.
Target Organs: Skin, eyes, central nervous system, liver, and kidneys.
Primary Entry Routes: Inhalation.
Acute Effects: Inhalation of VDC causes narcosis and respiratory irritation. Concentrations of 4000 ppm lead to symptoms of drunkenness and eventually unconsciousness if the exposure continues. In monkey studies, exposure to 200 ppm caused acute liver injury with a mechanism similar to carbon tetrachloride. Animal studies indicate acute kidney changes in high-level exposures. Eye contact may cause conjunctivitis, transient corneal injury, and iritis. VDC also causes skin and mucous membrane irritation.
Chronic Effects: With chronic inhalation, vinylidene chloride may cause hepatic and renal dysfunction. In monkey studies, long-term inhalation at a 48-ppm level caused liver and kidney damage and death.
FIRST AID
Eyes: Flush immediately, including under the eyelids, gently but thoroughly with flooding amounts of running water for at least 15 min.
Skin: *Quickly* remove contaminated clothing. After rinsing affected skin with flooding amounts of water, wash it with soap and water.
Inhalation: Remove exposed person to fresh air and support breathing as needed.
Ingestion: Never give anything by mouth to an unconscious or convulsing person. If ingested, have a *conscious* person drink 1 to 2 glasses of water, then induce repeated vomiting until vomit is clear.
After first aid, get appropriate in-plant, paramedic, or community medical support.
Physician's Note: Solutions containing increased MEHQ concentrations are caustic and should not be removed by emesis. There is no specific treatment for VDC intoxication, but if significant amounts have been ingested, monitor the patient for liver and kidney failure.

Section 7. Spill, Leak, and Disposal Procedures

Spill/Leak: *Design and practice a vinylidene chloride spill control and countermeasure plan (SCCP).* Notify safety personnel, evacuate all unnecessary personnel from hazard area, remove all heat and ignition sources, and ventilate area. Cleanup personnel should protect against inhalation and skin and eye contact. For lab spills, absorb the spill with paper towels and place in a hood to allow liquid to evaporate. For large spills, absorb bulk spill with cement powder, fly ash, sawdust, or commercial sorbents. Place waste in appropriate disposal containers. Follow applicable OSHA regulations (29 CFR 1910.120).
Disposal: Contact your supplier or a licensed contractor for detailed recommendations. Follow applicable Federal, state, and local regulations.
EPA Designations
RCRA Hazardous Waste (40 CFR 261.33): Not listed
Listed as a CERCLA Hazardous Substance* (40 CFR 302.4), Reportable Quantity (RQ): 5000 lb (2270 kg) [* per Clean Water Act, Sec. 31 (b)(4), Sec. 307(a); per RCRA, Sec. 3001]
SARA Extremely Hazardous Substance (40 CFR 355): Not listed
Listed as a SARA Toxic Chemical (40 CFR 372.65)
OSHA Designations
Air Contaminant (29 CFR 1910.1000, Subpart Z): Not listed

Section 8. Special Protection Data

Goggles: Wear protective eyeglasses or chemical safety goggles, per OSHA eye- and face-protection regulations (29 CFR 1910.133).
Respirator: Follow OSHA respirator regulations (29 CFR 1910.134) and, if necessary, wear a NIOSH-approved respirator. Respiratory canisters containing alkaline materials should not be used because dichloro acetylene can be formed. For emergency or nonroutine operations (cleaning spills, reactor vessels, or storage tanks), wear an SCBA.
Warning: Air-purifying respirators do *not* protect workers in oxygen-deficient atmospheres.
Other: Wear impervious gloves, boots, aprons, and gauntlets to prevent skin contact. Rubber gloves are recommended.
Ventilation: Provide general and local explosion-proof ventilation systems to maintain airborne concentrations below the OSHA PEL and ACGIH TLVs (Sec. 2). Local explosion-proof exhaust ventilation is preferred since it prevents contaminant dispersion into the work area by controlling it at its source.[109]
Safety Stations: Make available in the work area emergency eyewash stations, safety/quick-drench showers, and washing facilities.
Contaminated Equipment: Never wear contact lenses in the work area: soft lenses may absorb, and all lenses concentrate, irritants. Remove this material from your shoes and equipment. Launder contaminated clothing before wearing.
Comments: Never eat, drink, or smoke in work areas. Practice good personal hygiene after using this material, especially before eating, drinking, smoking, using the toilet, or applying cosmetics.

Section 9. Special Precautions and Comments

Storage Requirements: Store vinylidene chloride in tanks with nickel, glass, or baked phenolic linings at 14 °F/-10 °C in the absence of light, air, water, and other polymerization initiators under a nitrogen blanket (at 10-psi pressure and an oxygen content less than 100 ppm). Outside or detached storage is preferable. If stored inside, store in a standard flammable liquids storage cabinet separate from oxidizing materials and incompatible materials (Sec. 5).

Engineering Controls: VDC requires special handling, precautions, and employee training. Do not handle VDC without adequate ventilation and personal protective gear. Limit exposures to vinylidene chloride by improving housekeeping procedures. Keep VDC away from all heat and ignition sources. All engineering systems should be of maximum explosion-proof design, electrically grounded, and bonded.

Transportation Data (49 CFR 172.101, .102)

DOT Shipping Name: Vinylidene chloride, inhibited
DOT Hazard Class: Flammable liquid
ID No.: UN1303
DOT Label: Flammable liquid
DOT Packaging Requirements: 173.119
DOT Packaging Exceptions: 173.118

IMO Shipping Name: Vinylidene chloride, inhibited
IMO Hazard Class: 3.1
IMO Label: Flammable liquid
IMDG Packaging Group: I
ID No.: UN1303

***MSDS Collection* References:** 7, 26, 38, 53, 73, 84, 85, 87, 89, 100, 103, 124, 126, 127, 129, 134, 136
Prepared by: MJ Allison, BS; **Industrial Hygiene Review:** DJ Wilson, CIH; **Medical Review:** W Silverman, MD

Copyright © 1990 by Genium Publishing Corporation. Any commercial use or reproduction without the publisher's permission is prohibited. Judgments as to the suitability of information herein for the purchaser's purposes are necessarily the purchaser's responsibility. Although reasonable care has been taken in the preparation of such information, Genium Publishing Corporation extends no warranties, makes no representations, and assumes no responsibility as to the accuracy or suitability of such information for application to the purchaser's intended purpose or for consequences of its use.

Material Safety Data Sheet

From Genium's Reference Collection
Genium Publishing Corporation
1145 Catalyn Street
Schenectady, NY 12303-1836 USA
(518) 377-8855

GENIUM PUBLISHING CORP.

No. 382

VINYL CHLORIDE
(Revision A)
Issued: August 1978
Revised: August 1988

SECTION 1. MATERIAL IDENTIFICATION

Material Name: VINYL CHLORIDE

Description (Origin/Uses): Widely used to make PVC resins and plastics; also used in organic synthesis.

Other Designations: VCM; Vinyl Chloride Monomer; Chloroethylene; Chloroethene; C_2H_3Cl; CAS No. 0075-01-4

Manufacturer: Contact your supplier or distributor. Consult the latest edition of the *Chemicalweek Buyers' Guide* (Genium ref. 73) for a list of suppliers.

NFPA

HMIS	
H 2	R 1
F 4	I 4
R 1	S 3
PPG*	K 4
*See sect. 8	

SECTION 2. INGREDIENTS AND HAZARDS

	%	EXPOSURE LIMITS
Vinyl Chloride, CAS No. 0075-01-4	Ca 100	**OSHA PEL** 8-Hr TWA: 1 ppm* **ACGIH TLV, 1987-88** TLV-TWA: 5 ppm, 10 mg/m³ **Toxicity Data**** Rat, Oral, LD_{50}: 500 mg/kg

*The action level set by OSHA in 29 CFR 1910.1017 is 0.5 ppm. Exposures above this level are strictly regulated by extensive medical record keeping, reporting, surveillance, and other requirements. Consult 29 CFR 1910.1017 for details.

**See NIOSH, *RTECS* (No. KU9625000), for additional data with references to mutagenic, reproductive, and tumorigenic effects.

SECTION 3. PHYSICAL DATA

Boiling Point: 61°F (16°C)
Water Solubility (%): Insoluble
Molecular Weight: 107 Grams/Mole
Vapor Density (Air = 1): 2.2

Appearance and Odor: A colorless gas; mild, sweet odor at high concentrations.

SECTION 4. FIRE AND EXPLOSION DATA

Flash Point and Method	Autoignition Temperature	Flammability Limits in Air	LOWER	UPPER
-108.4°F (-78°C)	882°F (472°C)	% by Volume	3.6%	33%

Extinguishing Media: Vinyl chloride gas is a severe fire and explosion hazard; treat any fire involving it as an emergency. Try to shut off the flow of gas. Use a water spray to protect the personnel attempting this and to cool fire-exposed cylinders/containers of vinyl chloride.

Unusual Fire or Explosion Hazards: This heavier-than-air gas can flow along surfaces, reach distant sources of ignition, and flash back. Eliminate sources of ignition in the workplace, particularly in low-lying areas such as sumps, cellars, basement utility rooms, and underground piping systems.

Special Fire-fighting Procedures: Wear a self-contained breathing apparatus (SCBA) with a full facepiece operated in the pressure-demand or positive-pressure mode.

SECTION 5. REACTIVITY DATA

Vinyl chloride is stable in closed, airtight, pressurized containers at room temperature under normal storage and handling conditions. It can undergo hazardous polymerization if it is heated or reacted with a polymerization catalyst, or if the concentration/activity of the added inhibitor becomes too low.

Chemical Incompatibilities: This material is incompatible with copper, aluminum, and other polymerization catalysts or free radical initiators like hydroquinone.

Conditions to Avoid: Do not allow sources of ignition such as open flame, unprotected heaters, lighted tobacco products, electric sparks, or excessive heat in work areas. Avoid prolonged exposure to air, especially in the presence of certain contaminants, because dangerous levels of polyperoxides may accumulate. Avoid exposure to sunlight; if the proper catalytic conditions occur, the vinyl chloride monomer may react with itself and undergo an explosive polymerization reaction. Violent ruptures of containers of this gas can occur.

Hazardous Products of Decomposition: During fires, vinyl chloride may decompose into toxic gases such as hydrogen chloride, carbon monoxide, and phosgene.

SECTION 6. HEALTH HAZARD INFORMATION

Vinyl chloride is listed as a carcinogen by the ACGIH, NTP, and IARC with sufficient epidemiological evidence from human studies.
Summary of Risks: Vinyl chloride depresses the central nervous system (CNS), causing effects that resemble mild alcohol intoxication; however, these effects can progress to narcosis, eventual collapse, and even death as the intensity and/or duration of the exposure continues. Thrombocytopenia (decrease in blood platelets) has been reported following exposures.
Medical Conditions Aggravated by Long-Term Exposure: Possible liver effects. **Target Organs:** Respiratory system, skin, eyes, kidneys, hematopoietic (blood) system, and musculoskeletal system. **Primary Entry:** Inhalation. **Acute Effects:** Headache, dizziness, lightheadedness, skin and eye irritation. **Chronic Effects:** Cancer, especially angiosarcoma of the liver.
FIRST AID: Eyes. Immediately flush eyes, including under the eyelids, gently but thoroughly with plenty of running water for at least 15 minutes. **Skin.** Skin contact with liquid vinyl chloride causes frostbite (cryogenic injury). Treat this accordingly.
Inhalation. Remove the exposed person to fresh air; restore and/or support his or her breathing as needed.
Ingestion. Unlikely.
GET MEDICAL HELP (IN PLANT, PARAMEDIC, COMMUNITY) FOR ALL EXPOSURES. Seek prompt medical assistance for further treatment, observation, and support after first aid.

SECTION 7. SPILL, LEAK, AND DISPOSAL PROCEDURES

Spill/Leak: *Treat any vinyl chloride gas leak as an emergency.* Preplan emergency responses and make sure all personnel know about them. Notify safety personnel, evacuate all nonessential personnel, provide maximum explosion-proof ventilation, and eliminate all sources of ignition immediately. Make sure cleanup personnel have protection against contact with this material and inhalation of its vapor (see sect. 8). **Waste Disposal:** Contact your supplier or a licensed contractor for detailed recommendations for disposal. Follow Federal, state, and local regulations.
OSHA Designations
Air Contaminant (29 CFR 1910.1000 Subpart Z)
Vinyl chloride is specifically regulated by OSHA at 29 CFR 1910.1017 as a suspected carcinogenic agent.
EPA Designations (40 CFR 302.4)
RCRA Hazardous Waste, No. U043
CERCLA Hazardous Substance, Reportable Quantity: 1 lb (0.454 kg), per Clean Water Act (CWA), section 307 (a); Clean Air Act (CAA), section 112; and Resource Conservation and Recovery Act (RCRA), section 3001.

SECTION 8. SPECIAL PROTECTION INFORMATION

Goggles: Always wear protective eyeglasses or chemical safety goggles. Follow OSHA eye- and face-protection regulations (29 CFR 1910.133). **Respirator:** Consult the *NIOSH Pocket Guide to Chemical Hazards* for general recommendations on respirators. Follow OSHA respirator regulations (29 CFR 1910.134). For emergency or nonroutine use (leaks or cleaning reactor vessels and storage tanks), wear an SCBA with a full facepiece operated in the pressure-demand or positive-pressure mode. **Warning:** Air-purifying respirators will *not* protect workers in oxygen-deficient atmospheres. **Other:** Wear impervious gloves; boots; aprons; head covers; and clean, impervious, body-covering clothing to prevent any possibility of skin contact with vinyl chloride. All clothing must be flame resistant. **Ventilation:** Install and operate general and local ventilation systems powerful enough to maintain airborne levels of vinyl chloride below the OSHA PEL standard cited in section 2. All ventilation systems must be of maximum explosion-proof design, e.g., nonsparking, electrically grounded and bonded. **Safety Stations:** Make eyewash stations, safety showers, and washing facilities available in areas of use and handling. **Contaminated Equipment:** Contact lenses pose a special hazard; soft lenses may absorb irritants and all lenses concentrate them. Do *not* wear contact lenses in any work area. **Other:** Design all engineering systems to be explosion-proof in areas where vinyl chloride gas may occur. Pressure check all pipes and equipment used with this gas and make sure that all connections are leak tight. **Comments:** Practice good personal hygiene; always wash thoroughly after using this material. Avoid transferring it from your hands to your mouth while eating, drinking, or smoking. Do *not* eat, drink, or smoke in any work area.

SECTION 9. SPECIAL PRECAUTIONS AND COMMENTS

Storage/Segregation: Store vinyl chloride in a cool, dry, well-ventilated area away from sources of ignition and incompatible chemicals. Outside or detached storage is recommended. Shade containers from radiant heat and direct sunlight. **Special Handling/Storage:** Vinyl chloride is shipped/stored as a pressurized gas in cylinders or tank cars. Protect these containers against physical damage and regularly inspect them for cracks, leaks, or faulty valves. Ground and bond all containers used in shipping/transferring operations. Store cylinders upright; secure them tightly; do not drag or slide them; move them in a carefully supervised manner with a suitable hand truck. Monitor the activity and concentration of the added inhibitor to the vinyl chloride product. Follow your supplier's recommendations concerning proper shelf life, rotation of inventory, and maintenance of purity. **Engineering Controls:** Make all engineering systems (ventilation, production, etc.) of maximum explosion-proof design. **Comments:** Perform all operations with vinyl chloride carefully to prevent accidental ignition. Do not smoke in any use or storage area. Maintain the valve protection cap in place until immediately before using vinyl chloride. Insert a check valve or trap into the transferral line to prevent a dangerous backflow into the original container. Use pressure-reducing regulators when connecting cylinders to lower-pressure piping systems. Obtain detailed handling, shipping, and storage information from your supplier. A trained chemist or safety specialist familiar with the physical and chemical properties of this material should be present during all work operations.
Transportation Data (49 CFR 172.101-2)

DOT Shipping Name: Vinyl Chloride	**DOT Label:** Flammable Gas	**IMO Label:** Flammable Gas
DOT ID No. UN1086	**DOT Hazard Class:** Flammable Gas	**IMO Class:** 2.1

References: 1, 2, 12, 73, 84-94.

Judgments as to the suitability of information herein for purchaser's purposes are necessarily purchaser's responsibility. Therefore, although reasonable care has been taken in the preparation of such information, Genium Publishing Corp. extends no warranties, makes no representations and assumes no responsibility as to the accuracy or suitability of such information for application to purchaser's intended purposes or for consequences of its use.

Prepared by PJ Igoe, BS
Industrial Hygiene Review: DJ Wilson, CIH
Medical Review: MJ Hardies, MD

Copyright © 1988 Genium Publishing Corporation.
Any commercial use or reproduction without the publisher's permission is prohibited.

ATTACHMENT B

DRILLING SAFETY

DRILLING SAFETY

Drilling and sampling activities present several potential hazards. Minimizing these hazards requires strict adherence to safe operating procedures.

Drill Crews

Drillers will be responsible for the safe operation of the drill rig as well as their crew's adherence to the requirements of the project specific health and safety plan. The driller must ensure that all safety equipment is in proper condition and is properly used. The members of the drill crew will follow all instructions of the driller, wear all appropriate personal protective equipment, and be aware of the hazards and applicable control procedures.

Rig Inspection

Each day, prior to the start of work, the drill rig and associated equipment will be inspected by the driller. The following checks will be made:

Vehicle Condition: Check proper operation of brakes, lights, steering mechanism, and horn.

Equipment Storage: All equipment such as auger flights, split spoon samplers, hammers, hand tools, etc. will be properly stored in an appropriate location and will be secured before moving the rig.

Wire Rope, Cat Line: All wire rope, cable and Cat Line will be inspected for signs of wear such as broken wires, a reduction in rope diameter, abrasion, or signs of rust. Worn, frayed, or otherwise damaged wire rope or cable will be replaced.

Safety Equipment: Each rig will have at least one fire extinguisher (Type B/C) and one first aid kit.

Rig Set-Up

Each drill rig will be properly blocked and leveled prior to raising the derrick. The rig will be moved only after the derrick has been lowered. The leveling jacks will not be raised until the derrick has been lowered.

Blocking provides a more stable drilling structure by evenly distributing the weight of the rig. Proper blocking ensures that differential settling of the rig does not occur. Wooden blocks, at least 12 by 12 inches and four to eight inches thick, are recommended and should be placed between the jack swivels and the ground. The emergency brake will be engaged and the wheels that are on the ground will be chocked. Site drilling will comply with the following rules:

- Before drilling, the Site Safety Officer will ensure that an adequate safety zone exists around the drill rig and associated operations.

- Before drilling, the existence of underground utilities in the work area will be determined and conspicuously marked.

- If drilling is conducted in the vicinity of overhead power lines, proper distance will be maintained between the drill rig and the lines as per OSHA 29 CFR 1926, Subpart N, and other applicable requirements.

General Operating Procedures

The operator of the drill rig will only operate from the position of the controls. If the operator must leave his position, the transmission must be in neutral.

When working on the derrick platform, the drill crew should not guide drill rods or pipe into racks by taking hold of a moving line. Materials should not be stored or transported within the derrick. Pipe, drill rods, auger flights, hammers, and other drilling tools should be stored in racks and chained in place. During drilling, penetration hammers will be placed at a safe location on the ground.

APPENDIX D

MICROSEEPS SAMPLING PROCEDURE AND ANALYTICAL METHOD AM4.03

MICROSEEPS

INSTRUCTIONS FOR SAMPLING VAPOR EXTRACTION SYSTEMS

1. Equipment: 22 cc sample bottles which have been evacuated by Microseeps prior to shipment; 50 cc disposable syringe; syringe needle.

2. Attach syringe needle to syringe.

3. Insert needle into air stream to be sampled.

4. Take 50 cc sample and discard.

5. Take 40 cc sample into syringe.

6. Insert syringe needle through septum into evacuated 22 cc sample vial. Try to keep syringe and bottle " in line " so that the puncture hole in septum is minimized.

7. Compress all of the 40 cc sample into the vial. An easy way to accomplish this is to hold the barrel of the syringe firmly in one hand with the plunger "down" and the sample bottle "up" and held by the other hand. Compress the plunger by pressing down against a convenient solid object (a table, the ground, your knee,...)

8. Remove syringe from bottle while holding plunger compressed. Syringe should be withdrawn quickly and " in line " so as not to increase size of puncture.

9. This procedure should result in a positive pressure of about 12 psig in the sample vial. Any resulting leakage, which we have determined to be very small and occur only rarely, is out of the bottle resulting in no sample contamination.

10. Flush the syringe (needle attached) with 5 or more volumes of clean air before taking the next sample starting with step 2 above.

11. Use different syringes and needles for influx and outflux or if you have only one syringe, sample the outflux first and increase the syringe flush between samples.

220 William Pitt Way, Pittsburgh, PA 15238 • Phone (412) 826-5245, Fax (412) 826-3433

ANALYTICAL METHOD AM4.03

ANALYSIS OF VOLATILE ORGANIC COMPOUNDS IN SOIL GAS

1.0 Scope and Application

1.1 Method AM4.03 is used to determine the concentration of any volatile organic compound in soil gas samples detectable with a flame ionization or electron capture detector. The compounds listed below are the most common analytes:

pentane	benzene
hexane	toluene
heptane	m & p-xylene
octane	o-xylene
nonane	ethyl benzene
decane	freon 113
chloromethane	bromomethane
vinyl chloride	chloroethane
1,1-dichloroethylene	fluorotrichloromethane
methylene chloride	1,2-dichloropropane
1,1-dichloroethane	bromodichloromethane
1,2-dichloroethane	cis 1,3-dichloropropylene
trans 1,2-dichloroethylene	trans 1,3-dichloropropylene
chloroform	1,1,2-trichloroethane
1,1,1-trichloroethane	chlorodibromomethane
carbon tetrachloride	chlorobenzene
trichloroethylene	bromoform
tetrachloroethylene	1,2-dichlorobenzene
1,1,2,2-tetrachloroethane	1,4-dichlorobenzene
1,3-dichlorobenzene	acetone
methyl t-butyl ether	2-butanone
undecane	dodecane
tridecane	tetradecane
pentadecane	hexadecane
heptadecane	octadecane

1.2 This method is recommended for use by, or under the supervision of, analysts experienced in the operation of a gas chromatograph and in the interpretation of a chromatogram.

2.0 Summary of Method

The volatile organic compounds are analyzed using a Hewlett Packard Model 5890A Gas Chromatograph in conjunction with a Tekmar Model 7000 Automated Headspace Sampler and an H.P. 3396A Networking Integrator. A Supelco, 60M x 0.75mm i.d. Vocol, wide bore capillary column is used in conjunction with an output splitter connected to

an electron capture detector and a flame ionization detector. The integrator is interfaced to a microcomputer for data storage and processing. Data transfer and analyses are facilitated using a chromatography data system (Chrom Perfect, Justice Innovations).

3.0 Interferences

3.1 Contamination by carryover can occur whenever high-level and low-level samples are sequentially analyzed. The Tekmar 7000 provides continuous flushing of the sample loop and sample valve while in the standby mode between analyses. This flush flow should be maintained and the sample valve and loop should be kept heated.

3.2 The analyst should demonstrate the absence of carryover contamination by analysis of the contents of the sample loop when purged with pure nitrogen. This demonstration should be performed prior to the analysis of a sample set and when carryover contamination is suspected (after high samples). In the event that 'ghost peaks' (peaks similar to previous sample) appear when a pure nitrogen sample is analyzed measures should be taken to eliminate the carryover contamination.

3.3 Extra peaks in a chromatogram can be actual peaks from a previous run. Contamination from late eluting peaks can occur when injection to injection time is too short or when the column conditioning program described in section 3.4 is not adequate. The HP 5890A is equipped with a temperature programmable oven which can be utilized to minimize this interference.

3.4 The analyst should be certain that all compounds have eluted from the previous analysis prior to analyzing any sample or standard. This can be accomplished by elevating the oven temperature after an analysis until such time that a clean stable baseline is obtained. If samples or standard chromatograms contain suspected 'extra peaks' the sample should be reanalyzed after a clean baseline is established.

3.5 Other interferences that affect the sample analysis can come from sample vials, vial septums, needles and equipment used to collect the sample. Before and during sample analysis, sample blanks (evacuated vials filled with high purity nitrogen, and sample vials from the field filled with ambient air) should be analyzed to assure the absence of interferences.

4.0 Materials and Equipment

4.1 Sample vials: 22 ml glass vials (Hewlett Packard #9301-0716 or equivalent). Vials should be free of all interfering compounds prior to use. This can be accomplished by washing and rinsing with hydrocarbon free water followed by heating to 100 degrees C for 1 hour followed by purging with pure nitrogen.

4.2 Septums: Teflon lined septums (Wheaton #224168 or equivalent) may be used.

4.3 Gas Chromatograph: The Hewlett Packard 5890A Gas Chromatograph is equipped with a Supelco, 60M x 0.75mm i.d. Vocol, wide bore capillary column connected to an electron capture detector and flame ionization detector.

4.4 Headspace Sampler: A Tekmar (Model 7000) equipped with a Tekmar (Model 7050) automated carrousel is used. The carrousel contains 50 slots for headspace vials. The vials are automatically transferred from the carrousel to a platen where they are heated for a preset time prior to injection. The headspace sampler also contains a heated sample valve, heated sample loop and heated transfer line to facilitate transfer of the sample onto the column in the gas chromatograph.

4.5 Data Collection: The output of the chromatograph is directed to a Hewlett Packard (HP-3396A) Networking Integrator which passes the data to a personal computer for data processing with Chrom Perfect software.

5.0 Sample Preparation and Analysis

5.1 Sample vial preparation: All sample vials should meet specifications as noted in sections 4.1 and 4.2 above. Vials should be tightly capped and evacuated to a pressure of less than 100 millitorr. The vial septum should be punctured only with needles of 22 gauge or smaller.

5.2 The evacuated sample vials should be filled with sample or standard gas to a positive gauge pressure. Sample vials should be used (filled with sample) within two weeks of preparation.

5.3 Place the 22 cc sample vials directly into the Tekmar 7050 carrousel and program the headspace autosample as described in section 8.2.

5.4 The headspace sampling unit will preheat the vial, mechanically puncture the septum, transfer the sample to the heated sample loop, then inject the sample into the column flow stream via a heated transfer line.

6.0 Standards and Calibrations

6.1 Gas standards or liquid standards may by used to achieve calibrations. In some situations it may be necessary to use both types of standards. Certified commercial gas standards are most desirable, but may not always be available for all the compounds or for the concentration levels of the compounds of interest.

6.2 Commercial gas standards are introduced by filling an evacuated 22ml headspace vial with standard gas. The gas standards are placed in the vials and analyzed in the same manner as samples (as described in section 5.0). The concentrations used are those certified by the manufacturer.

6.3 Liquid standard solutions are injected directly into a capped vial and allowed to vaporize. These standards may be produced from high purity compounds as described in Standard Preparation Method SP3 or from commercially available blends in methanol. The liquid standard solutions are placed in vials that meet specifications described in sections 4.1 and 4.2. The vials used must be capped and be at atmospheric pressure when the liquid standard is injected. The standard vial is then analyzed in the same manner as a sample vial as described in section 5.3.

6.4 At the beginning of a project or sample set, standards of appropriate calibration ranges will be run at least two times or until the results agree with a percent standard deviation no greater than 10%.

6.5 Calibration tables should be set up using an external standard method with the Chrom Perfect data system. It is recommended that the calibration table for individual compounds contain at least three standard concentration levels.

6.6 During the course of analyzing samples at least one standard should be run for every 10 samples.

6.7 The instrument response (for any one subsequent standard in section 6.5 above) must not vary by more than 25% from the mean of the initial calibration.

7.0 Quality Control

7.01 If the parameters set forth in section 6.6 are not met the analytical program will be terminated until the cause is determined and a solution is effected.

7.02 Before and during sample analysis, instrument blanks (sample loops filled with flush nitrogen) should be analyzed to assure the absence of interferences as described in section 3.0 above.

7.03 Before and during sample analysis, sample blanks (evacuated vials filled with high purity nitrogen, and sample vials from the field filled with ambient air) should be analyzed to assure the absence of interferences.

7.04 Prior to the analysis of a sample set, multiple

standards, at different concentration levels, should be analyzed to establish an initial calibration table. During sample analysis, standards should be run at a rate of 1 for each 10 samples.

7.05 Standards analyzed during the course of analyzing samples are used to monitor individual compound calibration and peak retention time stability. All chromatograms should be examined by an experienced analyst.

7.06 The soil gas sample vial is pressurized at the time of sampling. This pressure preserves sample integrity since any leakage is out of the vial and does not result in contamination or sample dilution.

7.07 Throughout the analysis the headspace gas is injected mechanically from a sample loop to achieve a uniform sample size. The flow through the sample loop comes directly from the sample vial which has been pressurized.

7.08 The headspace sampling unit contains a heated platen as well as a heated sampling loop and transfer line. The latter two zones are continually flushed with nitrogen between sample analyses to minimize the chance of instrumental carry over. This nitrogen in the sample loop is injected periodically to check for instrument contamination.

7.09 Once the headspace vials are punctured in the headspace unit, the sample loop is allowed to equilibrate to atmospheric pressure just prior to injection. This insures that an accurate, equal volume will be injected each time. Each vial is analyzed one time only.

7.10 Calibration records are generated and stored in the computer. All such records will be maintained in the laboratory during the course of the project.

8.0 Instrument Conditions

8.1 Gas Chromatograph:

Injection Temp. 220 deg. C.
Flame Ionization Detector Temp. 220 deg. C.
Electron Capture Detector Temp. 375 deg. C.
Oven Temp. Program:
- Initial temp. 35 deg. C.
- Hold 10 min.
- Rate 4 deg. min. to 135 deg. C.
- Hold .01 min.
- Rate 6 deg. min. to 219 deg. C.
- Hold 15 min.

Equilibration Time 1 min.
Initial E.C.D. Signal Range 5
Initial F.I.D. Signal Range 4
Carrier Flow Rates: (output of column split)
- Head Space Sampler in 12 cc/min.
- Make up gas to E.C.D. 76 cc/min.
- Make up gas to F.I.D. 34 cc/min.
- Total column 12 cc/min.

Hydrogen Pressure 22 psig.
Flame Air Pressure 30 psig.

8.2 Headspace Sampler:

Platen Temp. 75 deg. C.
Valve/Loop Temp. 110 deg. C.
Transfer Line 110 deg. C.
Sample Equilibration time 45 min.
Sampling interval 75 min (remote)
Valve Timing:
- Pressurize 0.0 min.
- Vent/fill loop 0.25 min.
- Loop equilibration 0.33 min.
- Inject to G.C. 1.0 min.

Carrier Flow 12 cc/min.