CDM FEDERAL PROGRAMS CORPORATION
a subsidiary of Camp Dresser & McKee Inc.

September 20, 1993

Ms. Elizabeth Van Rabenswaay
Regional Project Officer
U.S. Environmental Protection Agency
26 Federal Plaza, Room
New York, N.Y. 10278

RECEIVED
OCT 22 1993
WESTERN NW PROGRAMS
DIVISION OF HAZARDOUS
SUBSTANCES REGULATION

Project: TES V EPA Contract No.: 68-W9-0002

Document No.: TES5-R02029-EP-DBGL
Draft Letter Report for EPA Work Assignment R02029
Olin Facility
Niagara Falls, New York

Document Control No.: TES5-R02029-LR-DBGM

Dear Ms. Van Rabenswaay:

Please find enclosed the Draft Letter Report entitled, "Technical Evaluation of the DuPont Groundwater Remediation Program's Effects on the Groundwater and Surface Water Hydraulics at the Olin Facility", as partial fulfillment of the reporting requirements for this work assignment.

If you have any comments regarding this submittal, please contact Pamela Philip of CDM FEDERAL PROGRAMS CORPORATION at (212) 393-9634.

Sincerely,

CDM FEDERAL PROGRAMS CORPORATION

Scott B. Graber
TES V Regional Manager

SBG/PP/nv

cc: David Boyd, EPA Contract Officer (letter only)
Philip Masters, EPA Work Assignment Manager
Pamela Philip, CDM Federal Work Assignment Manager
Document Control (2 Copies)
NYC File

DRAFT
LETTER REPORT

TECHNICAL EVALUATION OF THE DUPONT GROUNDWATER REMEDIATION PROGRAM'S EFFECTS ON THE GROUNDWATER AND SURFACE WATER HYDRAULICS AT THE OLIN FACILITY NIAGARA FALLS, NEW YORK

Prepared for

U.S. ENVIRONMENTAL PROTECTION AGENCY
Office of Waste Programs Enforcement
Washington, D.C. 20460

EPA Work Assignment No.	: R02029
EPA Region	: II
Site No.	:
Contract No.	: 68-W9-0002
CDM Federal Programs Corporation	
Document No.	: TES5-R02029-LR-DBGM
Prepared By	: CDM Federal
Work Assignment Project Manager	: Pamela Philip
Telephone Number	: (212) 393-9634
EPA Work Assignment Manager	: Philip Masters
Telephone Number	: (212) 264-6118
Date Prepared	: September 20, 1993

CDM FEDERAL PROGRAMS CORPORATION
a subsidiary of Camp Dresser & McKee Inc.

September 20, 1993

Mr. Philip Masters
U.S. Environmental Protection Agency
26 Federal Plaza
New York, NY 10278

PROJECT: TES V, EPA Contract No.: 68-W9-0002

DOCUMENT NO.: TES5-R02029-LR-DBGM

SUBJECT: Technical Evaluation of the DuPont Groundwater Remediation Program's Effects at the Olin Facility
Olin Facility
Niagara Falls, New York

Dear Mr. Masters:

CDM Federal Programs Corporation (CDM Federal) has completed the technical evaluation of the DuPont groundwater remediation program's effects on the groundwater and surface water hydraulics at the Olin Facility. The effects of the DuPont remediation program on Olin facility related contamination were also examined. This evaluation was conducted by reviewing the documents listed in Attachment 1.

1.0 INTRODUCTION

The Olin Niagara Falls facility consists of two plants located south of Buffalo Avenue. Plant 2, the larger of the two plants, is bordered on the south by the DuPont Niagara Plant. DuPont is currently conducting a groundwater remediation program at the facility. Due to the proximity of the two facilities, it is necessary to evaluate the impacts of the DuPont remediation program on Olin groundwater and surface water.

1.1 Geology

The geology beneath the Olin Facility is characterized by approximately 10 feet of fill and glacial deposits (A zone) which overlies 80 to 150 feet of dolomite bedrock.

Groundwater flow in the A zone beneath the Olin facility is radial from a bedrock high near well OBA-7A which is located in the center of the facility. Flow direction varies little under Olin production well pumping and non-pumping conditions, implying that production well pumping has little impact on A zone water levels (WCC, 1984 and WCC, 1992a). The A zone discharges into the Niagara River to the south and beneath and into Gill Creek on the east.

Investigations at the DuPont site, have identified four major water bearing bedrock fractures zones (B zone, CD zone, D zone, and F zone) in the dolomite beneath the A Zone (overburden and top of bedrock). The B, CD, D, and F zones are expected to occur at depths below ground surface of 15-20, 45, 55, and 85 feet respectively (WCC, 1988b). The fracture zones were defined during subsurface investigations when 100 percent water loss occurred. The bedrock dips to the south/southeast at a rate of 23-29 feet per mile. WCC has limited the groundwater study beneath the Olin Facility to the A zone, B zone, and CD zones, citing evidence from past studies that groundwater flow is vertically upward beneath the CD zone. This, WCC claims, prohibits site contamination from reaching the deeper D and F zones. The CD zone is the most transmissive of the bedrock zones beneath the Olin facility, showing the greatest response to the Niagara River level changes and Olin production well pumping.

1.2 Hydrology

Two surface water bodies, the Niagara River and Gill Creek are located in the vicinity of the Olin facility (figure 1). The Niagara River is located approximately 1000 feet south of the facility while Gill Creek forms the eastern border of the Plant 2 section of the facility (figure 2). A system of man-made conduits north (Falls Street Tunnel) and northeast (Twin Buried Conduits) of the site divert groundwater flow north to the Robert Moses and Lewiston Power Plants reversing the expected groundwater flow direction beneath the site (figure 3).

2.0 DUPONT REMEDIATION PROGRAM

As stated in the DuPont Interim Remediation Program (IRP) (WCC, 1989b), the primary objective of the IRP at the DuPont facility is to control non-point source releases of contamination to overburden and bedrock groundwater beneath the site.

2.1 A Zone

DuPont is remediating the A zone using a pump and treat system. Groundwater from 22 wells located along the east-west axis of the DuPont site and is then treated onsite utilizing steam stripping. Treated groundwater is ultimately discharged to the City of Niagara Falls Waste Water Treatment Plant. Five of the pumping wells have been installed in the overburden to the top of the bedrock while the remaining 17 have been constructed 3-5 feet into the bedrock. The pump rate of each well varies between 1 and 5 gpm. Stripped organics are condensed, stored, and periodically shipped off-plant as hazardous waste (WCC, 1989b).

2.2 Bedrock

Bedrock groundwater at the DuPont facility is being remediated using a pump and treat system which utilizes the Olin facility production wells. The production wells are pumping from the CD zone to the F zone. Modelling efforts determined that the combined pumping rate of the two wells should not be less than 500 gpm for effective capture of DuPont's west plant groundwater

Printed on Recycled Paper

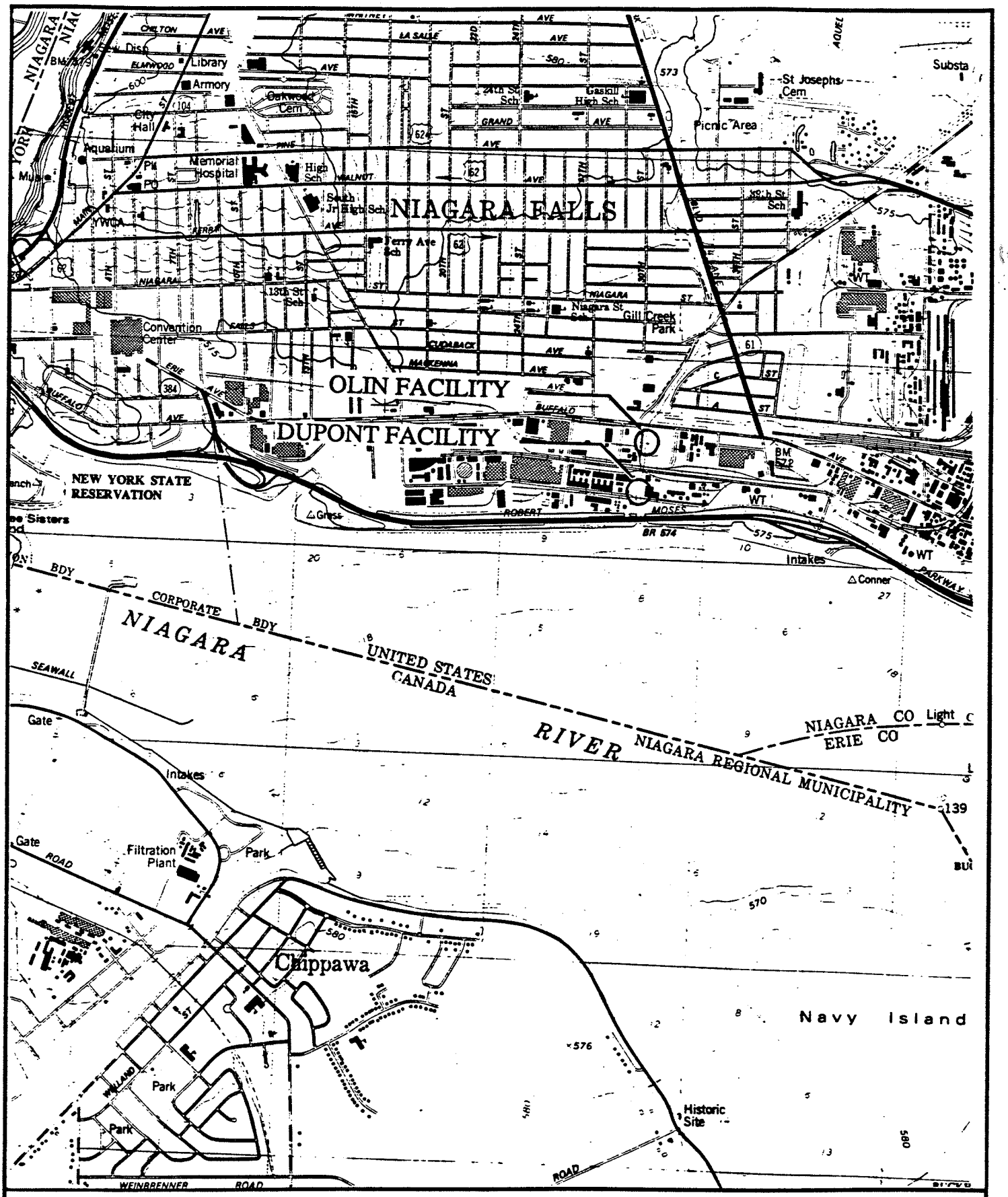

CDM FEDERAL PROGRAMS CORPORATION

OLIN CHEMICAL FACILITY

NIAGARA FALLS, NEW YORK

Figure 1

Facility Location Map

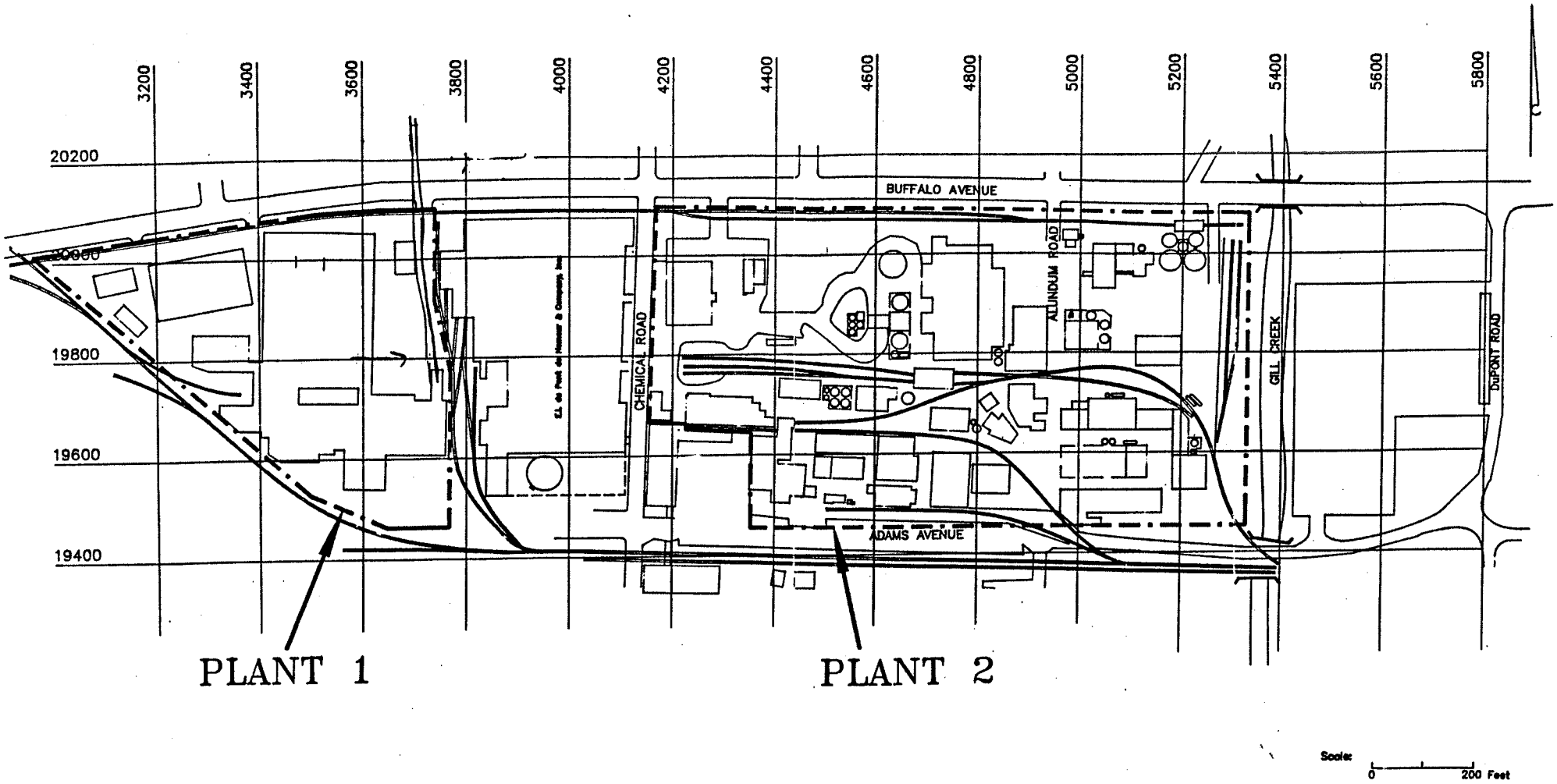

Source: Woodward Clyde Consultants

CDM FEDERAL PROGRAMS CORPORATION
OLIN CHEMICAL FACILITY
NIAGARA FALLS, NEW YORK

Figure 2

Olin Facility Map

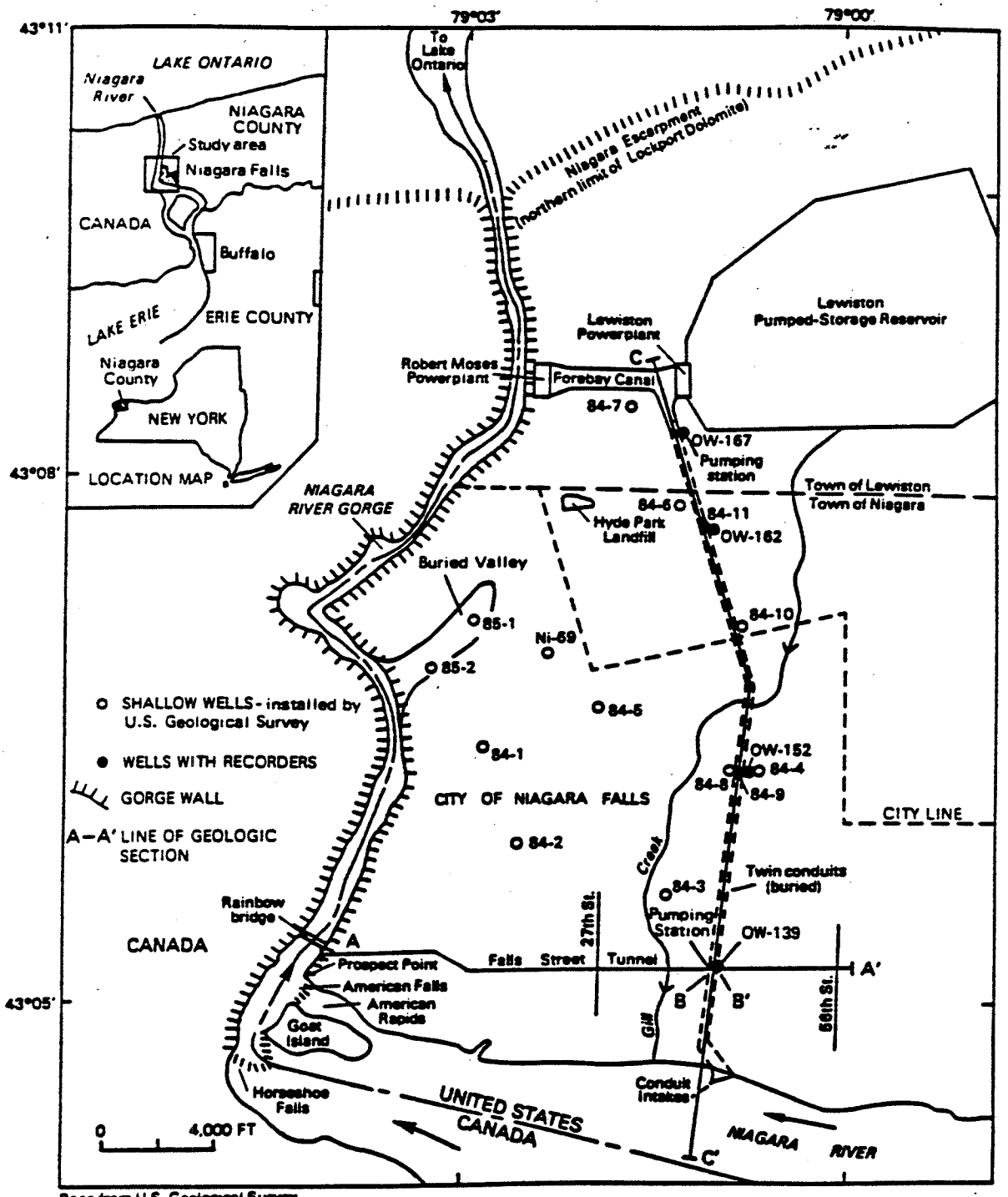

Base from U.S. Geological Survey
Lewiston, 1965, and Niagara Falls, 1965, 1:24,000

Source: Woodward Clyde Consultants

CDM FEDERAL PROGRAMS CORPORATION
OLIN CHEMICAL FACILITY
NIAGARA FALLS, NEW YORK

Figure 3
Regional Influences on Groundwater Flow

contamination. The groundwater is then treated by carbon adsorption and discharged to a permitted Olin outfall (WCC, 1989a).

3.0 REMEDIATION EFFECTS ON OLIN FACILITY GROUNDWATER AND CONTAMINATION

3.1 A Zone Groundwater Remedial System

Prior to implementing the A zone remedial system, DuPont's contractor WCC modelled the overburden and upper bedrock zone at the DuPont facility (Simulation 3) using the McDonald and Harbaugh (1984) model entitled "A Modular Three-Dimensional Finite-Difference Groundwater Flow Model (MODFLOW)" was used. Simulation 3, the proposed remedial action, simulated the pumping of groundwater from 22 shallow wells (five overburden wells and 17 top of bedrock/overburden wells). The model took into consideration hydraulic conductivity anisotropy and simulated head levels for two A zone hydrogeologic units, the low transmissive overburden and the more transmissive top-of-rock. Based on the model, two head distribution maps were generated which illustrated the simulated effects on the overburden and the top-of-rock zone groundwater (figures 4 and 5).

The maps included simulated head distributions beneath both the Olin and DuPont properties. Important information concerning the potential impact of the DuPont A zone remediation system on the groundwater beneath the Olin property was therefore provided.

By drawing flow lines perpendicular to the equipotential lines of the head distribution maps it is possible to determine the amount of shallow groundwater beneath the Olin site which is within the capture zone of the DuPont wells and to define the amount of groundwater which is migrating offsite.

3.1.1 Modelled Effects of Remediation

The Simulation 3 overburden head distribution map indicated that a large portion of the overburden groundwater between Chemical Road and Gill Creek is not being captured by the DuPont wells. Most of this groundwater discharges to Gill Creek. The overburden groundwater beneath the Olin property within a few hundred feet east of Gill Creek is also flowing toward the creek and not being captured. An area west of the Olin production wells is also not being captured (figure 4). Groundwater from this area flows south toward a discharge point in the Niagara River.

The Simulation 3 head distribution map for the top-of-rock zone indicated that nearly all of the groundwater in this zone beneath Olin will be captured by the DuPont remedial system. Only a small portion in the northeast section of the Olin facility will not be captured by the DuPont remedial program (figure 5).

3.1.2 Measured Effects of Remediation

Printed on Recycled Paper

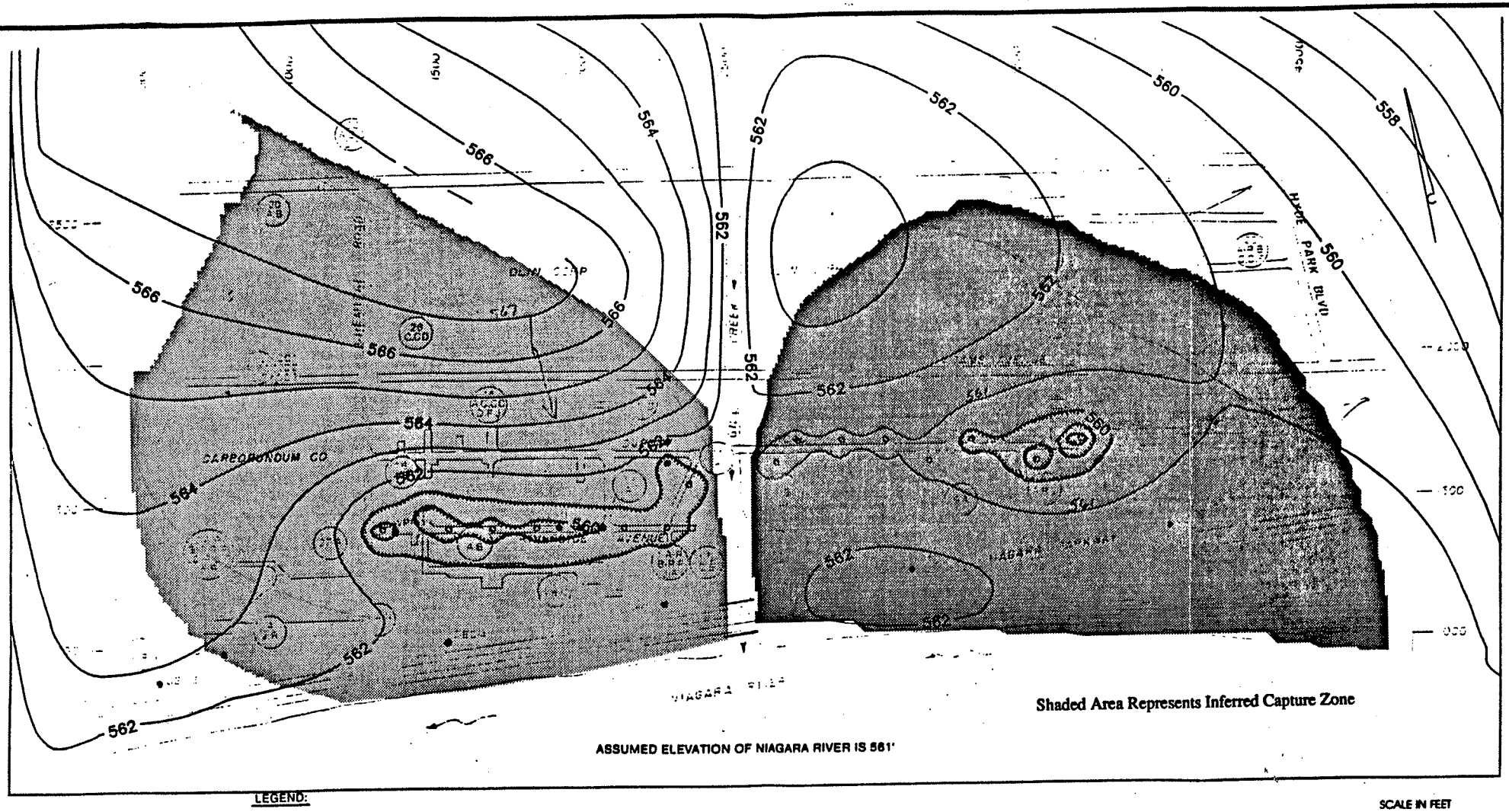

LEGEND:

- WELL CLUSTER NUMBER (NO.)
- WELL TYPE (LETTER)
- OLIN PRODUCTION WELL
- DEC WELLS
- OVERBURDEN - ONLY WELLS
- OVERBURDEN/TOP-OF-ROCK

SCALE IN FEET: 0 — 400

Source: Woodward Clyde Consultants

CDM FEDERAL PROGRAMS CORPORATION
OLIN CHEMICAL FACILITY
NIAGARA FALLS, NEW YORK

Figure 4
Simulation 3 Head Distribution (Water Levels) in the Overburden and Inferred Capture Zone

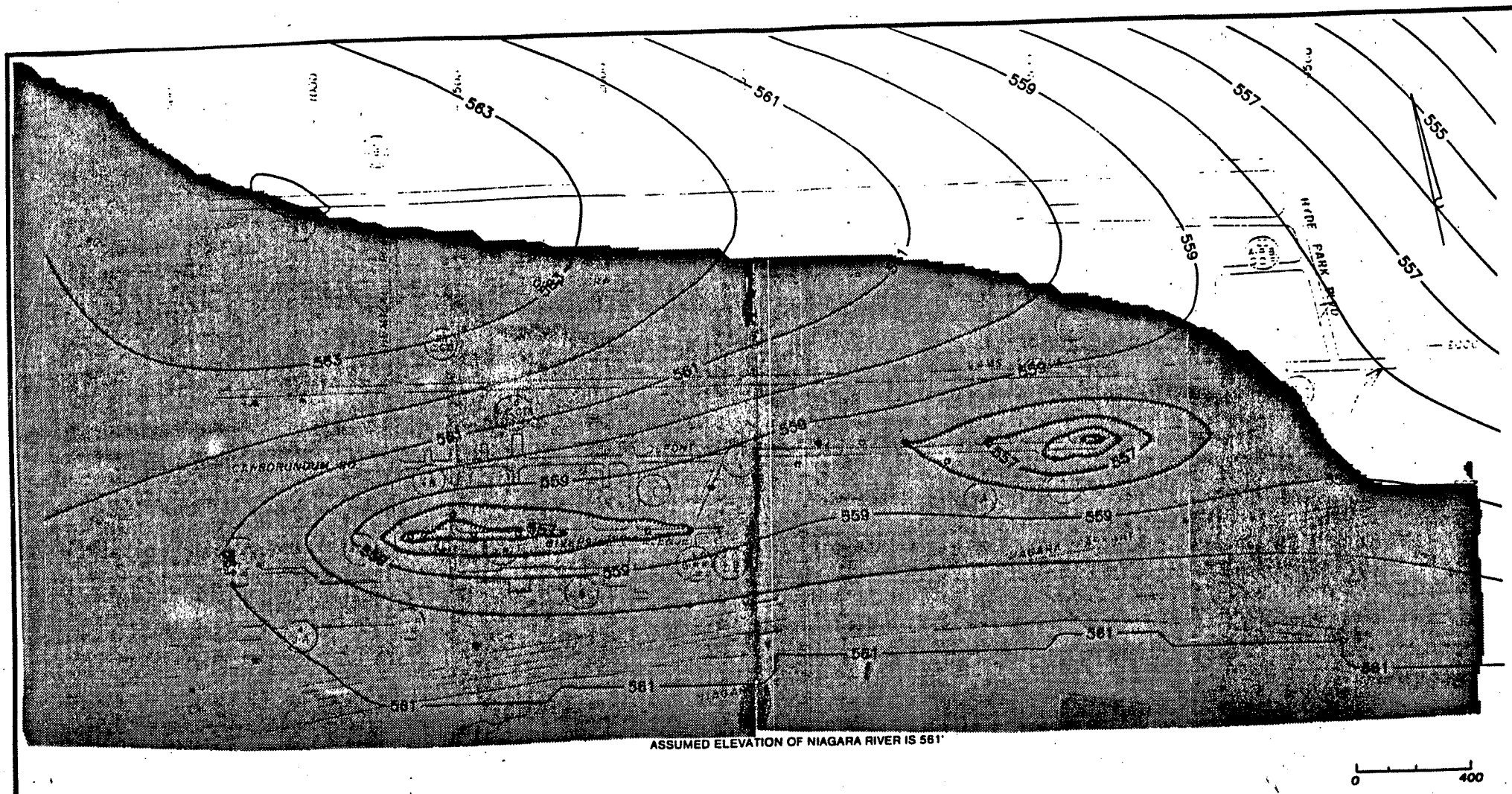

Shaded Area Represents Inferred Capture Zone

Source: Woodward Clyde Consultants

CDM FEDERAL PROGRAMS CORPORATION
OLIN CHEMICAL FACILITY
NIAGARA FALLS, NEW YORK

Figure 5
Simulation 3 Head Distribution (Water Levels) in the Top of Rock Zone and Inferred Capture Zone

Groundwater elevation maps produced during the actual pumping of the 22 remediation wells at the DuPont facility indicated that DuPont's remediation system will have some impact on the Olin facility. A direct assessment could not be made of the remediation system's impact on the Olin facility groundwater because simultaneous water level information from both sites is not available. The area of the Olin facility that is expected to be captured by the DuPont remediation system was inferred by comparing pre remediation Olin facility overburden groundwater head levels from September 1991 (figure 6) to Dupont facility overburden groundwater levels taken during remediation, September 1992 (figure 7). The area of groundwater beneath the Olin facility that is expected to be captured by the DuPont wells is south of well OBA-7A (figure 6) where the groundwater flow is to the south regardless of pumping at DuPont.

The exact extent of the capture zone that is created by the DuPont's remediation system is not clear from water elevation contours. The inability to define the capture zone is due to the fact that overburden groundwater elevations at the Olin facility were not taken simultaneously with those at the DuPont site during remediation.

3.1.3 Remediation Effects on Contamination

Organic contaminant concentrations, including high levels of aliphatic volatile organic compounds, which consistently exceeded State and federal MCLs were detected at the Olin facility in wells OBA-5A (figure 8) in the southeastern section of the site. Well OBA-8A, located on the western section of the site, also had some organic compounds which exceeded State and federal MCLs. Mercury concentrations exceeding State and federal MCLs were reported in wells OBA-5A and OBA-6A during the latest sampling round, September/November 1992. Well OBA-6A also had concentrations of methanol which exceeded State and federal MCLs.

Well OBA-10A, located downgradient from Plant 2 and across Gill Creek from OBA-9A, had elevated levels of organic contaminations which often exceeded the concentrations detected in OBA-9A. This could suggest that the highly contaminated groundwater in southeast section of Plant 2 may be migrating across Gill Creek. The higher levels of organic contaminants in OBA-10A versus OBA-9A could indicate that some of the contamination may be originating from the Creek or from the area just east of the creek. In addition, based on overburden groundwater level maps (WCC, 1992a), it is believed that some groundwater from the Plant 2 area is seeping into Gill Creek.

Well OBA-3A, located in the northeast section of the Olin site had elevated levels of total chlorinated benzenes, benzene, and total chlorinated aliphatic hydrocarbons. WCC claims that the organic contamination in OBA-3A originates from another site 200 feet east. However, groundwater levels from the WCC Interim RFI Report, 1992 show groundwater flow to the east in the vicinity of OBA-3A, placing this well downgradient of the Olin facility therefore, contradicting WCC's assertion.

The aforementioned wells are located in the areas where either groundwater is flowing offsite or toward Gill Creek, and do not appear to be influenced by the DuPont remediation system (A

Printed on Recycled Paper

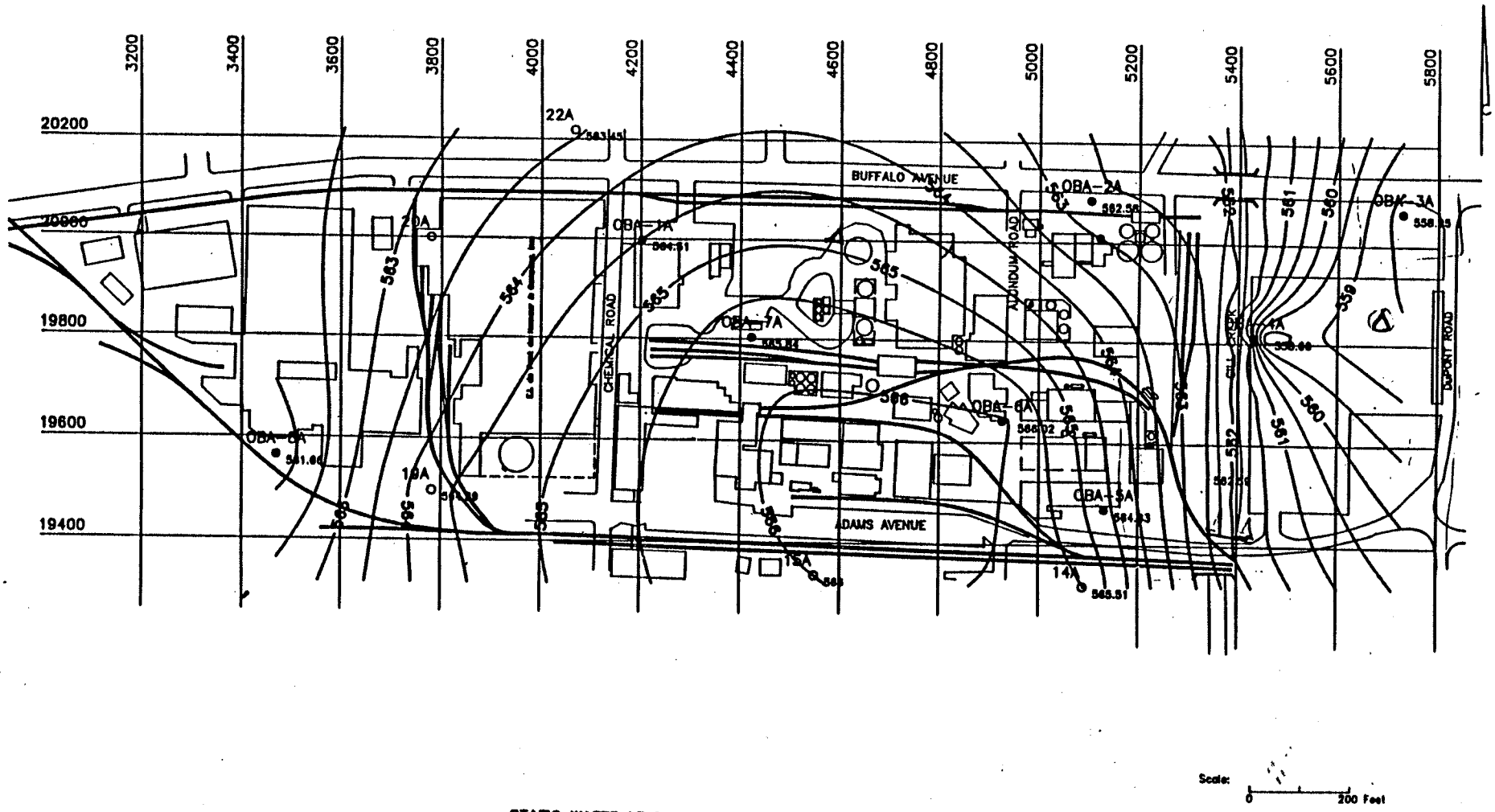

STATIC WATER LEVEL AT GILL CREEK: 561.83

DATE OF MEASUREMENT: 9/4/91

Source: Woodward Clyde Consultants

CDM FEDERAL PROGRAMS CORPORATION
OLIN CHEMICAL FACILITY
NIAGARA FALLS, NEW YORK

Figure 6
Potentiometric Surface Contour Map
A-Zone
September, 1991

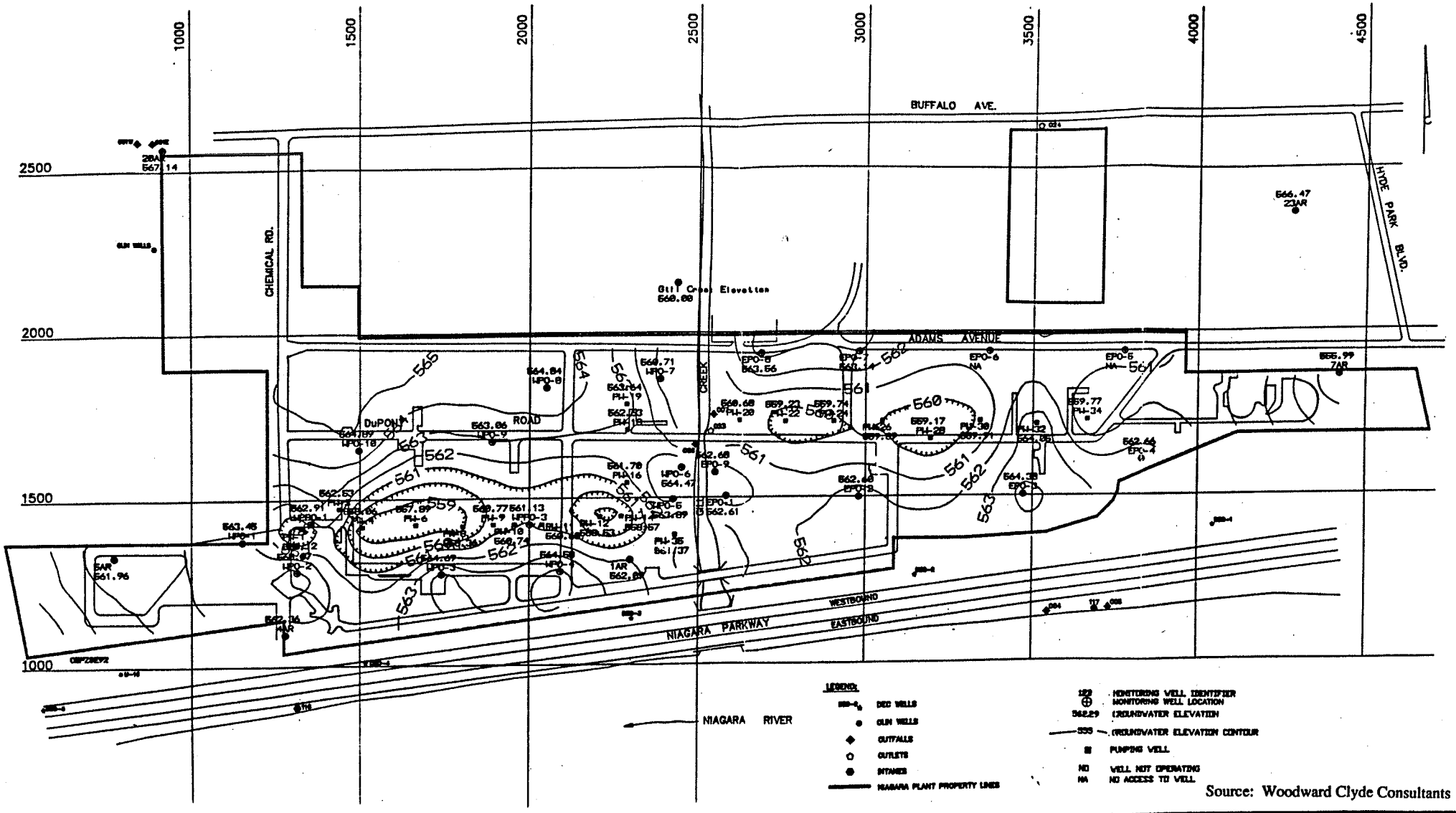

Source: Woodward Clyde Consultants

CDM FEDERAL PROGRAMS CORPORATION
OLIN CHEMICAL FACILITY
NIAGARA FALLS, NEW YORK

Figure 7
DuPont Facility
A-Zone Overburden Potentiometric Surface Map During Remediation

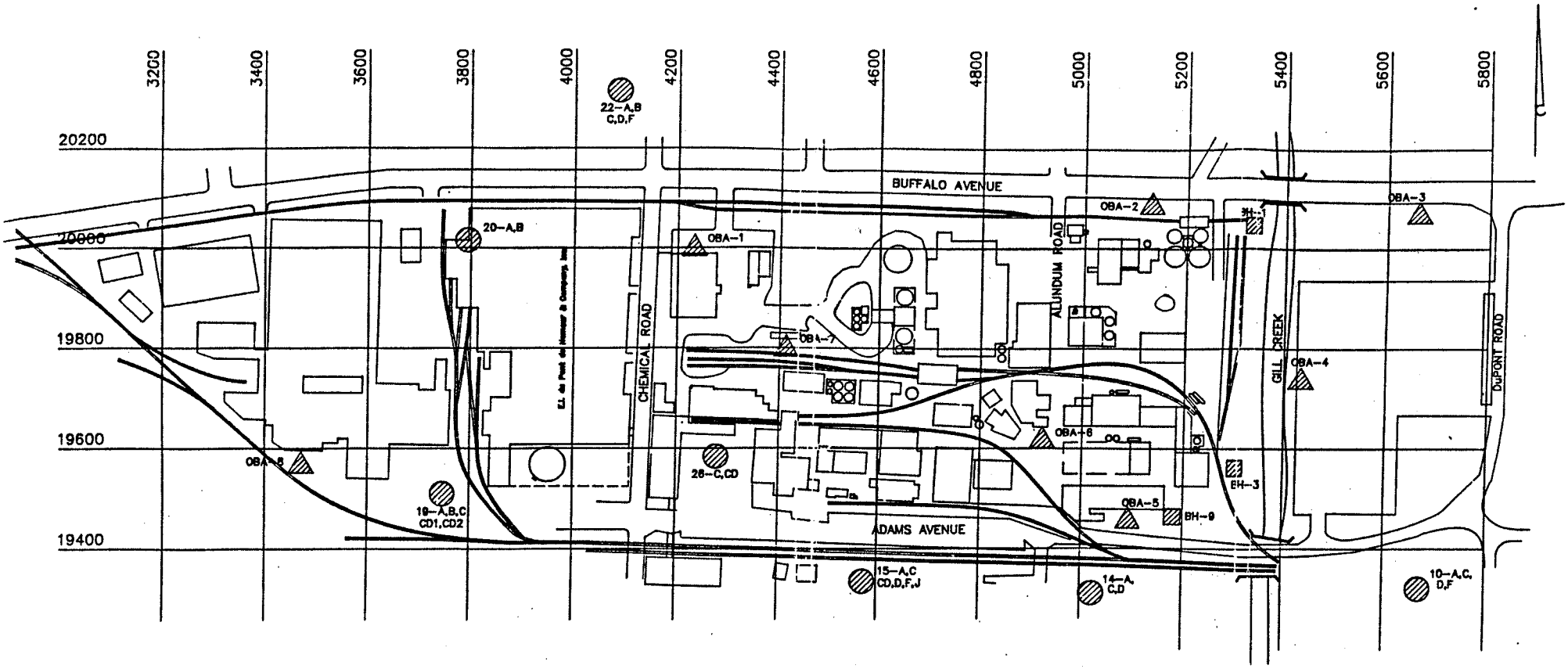

Source: Woodward Clyde Consultants

CDM FEDERAL PROGRAMS CORPORATION
OLIN CHEMICAL FACILITY
NIAGARA FALLS, NEW YORK

Figure 8

Olin Facility
Monitoring Well Location Map

zone pumping wells). Based on the modelled water level map of both the Olin and DuPont facilities (figures 4 and 5) and the Olin facility monitoring well locations (figure 8) it appears that the DuPont remediation system is not capturing a large area of overburden groundwater contamination beneath the Olin facility.

In order to make a thorough evaluation of the effects the DuPont shallow groundwater remediation program on the Olin facility groundwater contamination, it is necessary to produce a shallow groundwater elevation map which includes information from both sites taken at the same time and while the DuPont remedial program is active. Although the groundwater modelling maps do present this information they do not represent the actual field conditions, which may be vary from the modelled condition.

3.2 Bedrock Remediation System Effects

3.2.1 A Zone

An evaluation of the effects of pumping the Olin production well on the A zone beneath the Olin facility was presented in the WCC Interim RFI. The well was pumped at a rate increasing from 500 gpm to 1000 gpm to 1500 gpm. Even at a pumping rate of 1500 gpm for 48 hours, little to no response was observed in overburden water levels.

3.2.2 B Zone

The B fracture zone is located in the Lockport Dolomite and is generally found below the site at depths of 15-20 feet below the ground surface.

The remedial system's impact on groundwater flow in the B zone is well defined between well OBA-7B and the Olin production wells, where flow, during remediation conditions, is converging towards the Olin production wells (figure 8). However, groundwater flow in this horizon, east of the groundwater mound at OBA-7B, is not being captured by the bedrock remediation system (figure 9).

Concentrations of organic compounds consistently exceeded State and federal MCLs in wells OBA-1B, OBA-5B, OBA-8B, BH-3, and OBA-3B. Very high concentrations of aliphatic volatile organic compounds, on the order of 450 and 225 ppm, were detected in the groundwater samples from OBA-5B and OBA-8B, respectively from the September/October 1991 sampling round. Concentrations of chlorinated benzene compounds exceeded State and federal MCLs in OBA-3B during every sampling round. Wells OBA-1B, OBA-5B, and BH-3 consistently had the highest groundwater mercury concentrations which exceeded State and federal MCLs.

The monitoring wells in which significant contamination was detected and that are not within the remediation system capture zone are OBA-5B, OBA-3B, and BH-3 (figure 9).

3.2.3 CD Zone

Printed on Recycled Paper

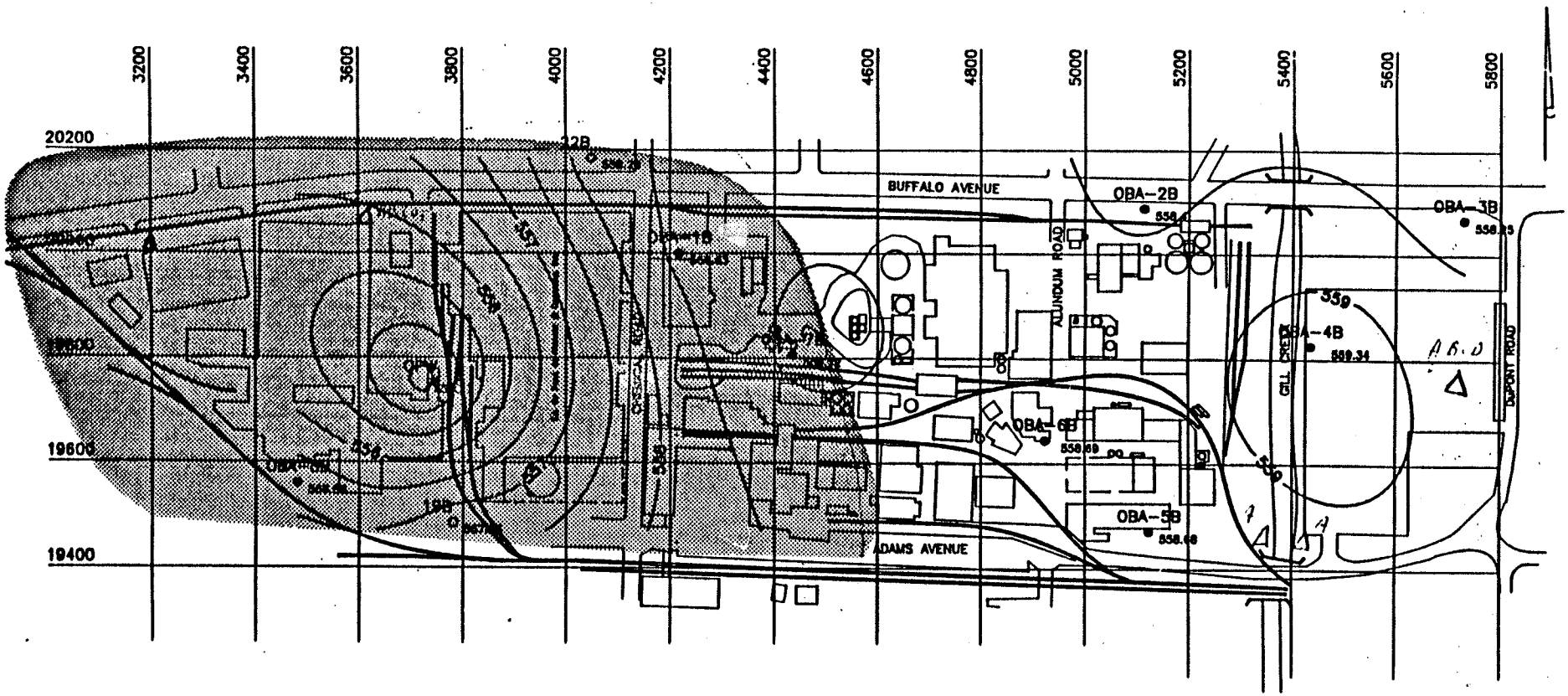

PRODUCTION WELL PUMPING RATE: 650 gpm

DATE OF MEASUREMENT: 9/4/91

Scale: 0 200 Feet

Shaded Area Represents Inferred Capture Zone

Source: Woodward Clyde Consultants

CDM FEDERAL PROGRAMS CORPORATION
OLIN CHEMICAL FACILITY
NIAGARA FALLS, NEW YORK

Figure 9
Potentiometric Surface Contour Map
B-Zone and Inferred Capture Zone
September, 1991

The CD fracture zone is located in the Lockport Dolomite approximately 45-50 feet below the ground surface. A minor fracture zone, the C zone, is of limited extent horizontally and located at approximately 25-35 feet below the ground surface. Groundwater flow in the C zone mimics that in the CD zone.

During remediation pumping, groundwater flow in this horizon is predominantly westward, toward the production wells. Based on pumping test response, the CD zone is the primary source of water to the production wells.

Because of the pumping, most of the Olin facility CD zone groundwater is being captured by the production wells. However, groundwater elevation maps from the WCC Interim RFI Report, 1992 show that some groundwater flow in the Plant 2 area may not be captured by the wells and, therefore, CD zone contamination may move offsite.

In addition to the pumping test observation well, WCC monitored monthly groundwater levels from October 1990 to September 1991. Most of the monthly groundwater flow diagrams from the WCC Interim RFI Report, 1992, indicate groundwater flow to the west toward the production wells. However, four months of groundwater elevation data, February 1991, May 1991, June 1991, and July 1991 show a flow regime which indicates that not all the site's CD zone groundwater flows to the production wells. Groundwater flow during these months, when pumping discharge rates were 500-600 gpm is skewed to the northwest. This implies that some of the onsite contamination will migrate offsite under the pumping discharge rates proposed for the DuPont remediation. Pumping rates greater than 700 gpm induce flow toward the production wells.

The monitoring wells which potentially may fall outside the remediation system capture zone are OBA-2C, OBA-3C, and OBA-5C (figures 8 and 10). All three wells had organic compound concentrations which exceed State and Federal maximum concentration levels (MCLs) (CDM, 1993).

3.2.4 F Zone

The D and F fracture zones are located approximately 55 and 85 feet, respectively, below the ground surface in the Lockport Dolomite.

No D or F zone wells are located on the Olin property but an extrapolation of the flow from the June 1985 diagram (WCC 1988b), indicate that flow should be to the north and northeast across the Olin site.

WCC claims that the vertical gradient of groundwater flow in the D and F zones is vertically upward to the CD zone and that therefore these units do not need to be evaluated further since contamination is unable to travel downward from the CD zone. WCC has based this conclusion on data collected from DuPont's groundwater monitoring wells located in the D and F aquifer zones. The groundwater potentiometric contours are presented in WCC (1988b) and WCC (1992b).

Printed on Recycled Paper

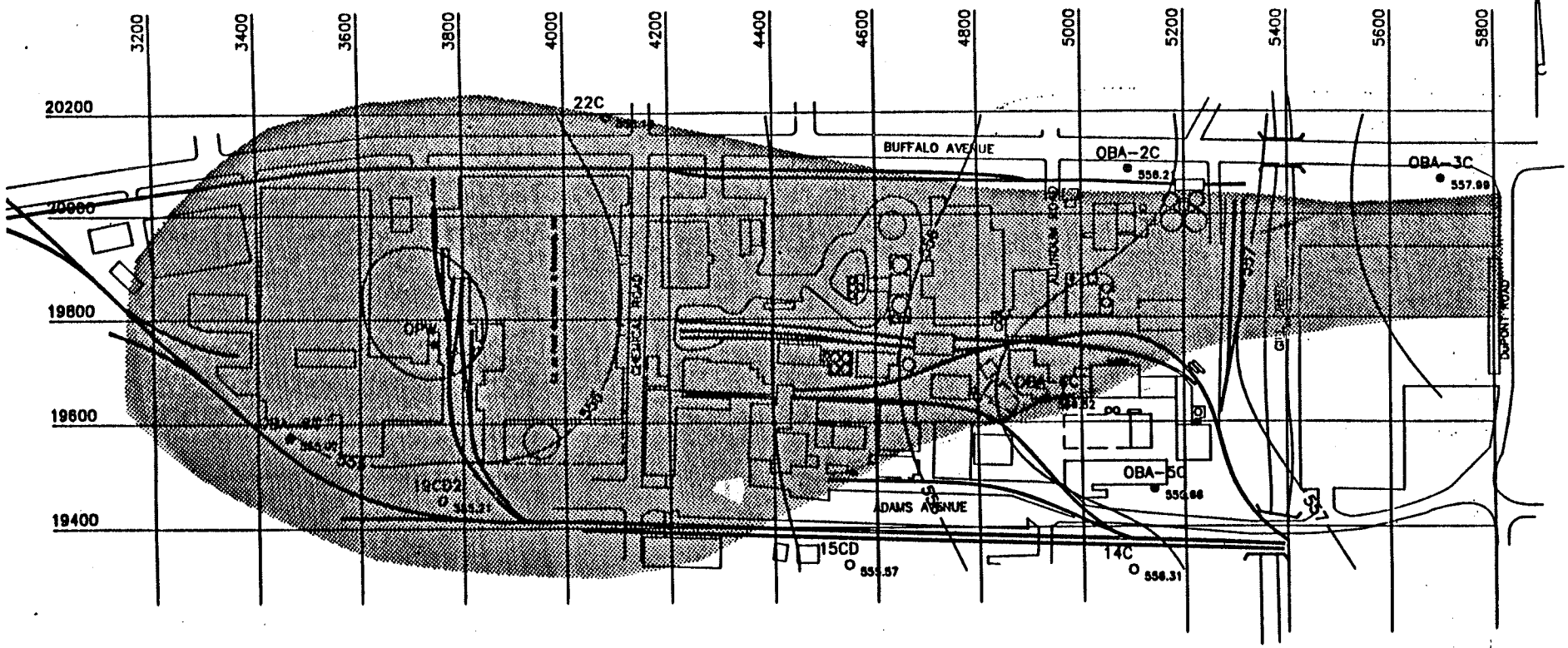

PRODUCTION WELL PUMPING RATE: 650 gpm

DATE OF MEASUREMENT: 9/4/91

Shaded Area Represents Inferred Capture Zone

Scale: 0 200 Feet

Source: Woodward Clyde Consultants

CDM FEDERAL PROGRAMS CORPORATION
OLIN CHEMICAL FACILITY
NIAGARA FALLS, NEW YORK

Figure 10
Potentiometric Surface Contour Map
CD-Zone and Inferred Capture Zone
September, 1991

DuPont groundwater contour maps for June 1985 and September 1992 do show upward gradients from the F zone to the CD zone, especially west of Gill Creek where the production wells have an impact by artificially lowering CD-zone groundwater levels. However, east of Gill Creek groundwater elevations taken during September 1992, in the F zone, are lower than those in the CD zone; indicating a downward flow exists. Groundwater elevations are generally lower at the DuPont site in the D zone than in the CD zone for both June 1985 and September 1992 measurements except for the northwest area near well 15. North of DuPont, in the vicinity of the Olin site, it is unclear in which vertical direction groundwater between the D and F zones and CD zone is flowing.

In addition since no D and F zone monitoring wells exist at the Olin Facility, no contamination data for these zones are available. Contamination data presented in WCC (1983) evaluated D and F zones beneath the DuPont facility. Even though groundwater flow is vertically upward over much of the DuPont facility, evidence for contamination in the D an F zones is present beneath the DuPont facility (WCC, 1983). WCC attributes this to the possibility of cross contamination by poorly constructed wells.

As no data concerning D and F zones groundwater elevations beneath the Olin site is currently available, it is difficult to properly assess the vertical gradients and the impact of production well pumping on those aquifer zones beneath the Olin facility. It is assumed that the Olin production well pumping will have an impact on the vertical flow gradients in the vicinity of the wells by lowering the water levels in the CD zone to below the D and F zones, thereby inducing an upward gradient. Additional data however is needed to further characterize aquifer conditions in the D and F zones.

4.0 DUPONT REMEDIATION EFFECTS ON NEARBY SURFACE WATER

4.1 Gill Creek

As the A zone remediation program for DuPont removes groundwater from the shallow it is assumed that the amount of groundwater discharged from the Olin facility to Gill Creek is slightly decreased. Groundwater flow in the overburden in the vicinity of Gill Creek remains towards the creek. Outside of 200 feet from the east bank, however, overburden flow is to the northeast. As stated in WCC (1992), the Olin production well pumping (bedrock zone remediation) has no observable impact on the water levels in Gill Creek. The simulated and actual A zone groundwater head distribution maps corroborate this (WCC, 1988a and WCC, 1992a).

Olin and DuPont have also been involved in Gill Creek remediation efforts. In 1981, the creek bed from Buffalo Avenue to the Robert Moses Parkway was dredged of its contaminated sediments and replaced with clay fill. Additional contamination has been detected in sediments at the Gill Creek mouth. These sediments are presently being remediated.

4.2 Niagara River

Printed on Recycled Paper

West of Gill Creek A zone groundwater flows toward the Niagara River and Gill Creek. Groundwater east of Gill Creek flows east/northeast, away from the river.

A seven-day continuous water level monitoring activity was conducted in well clusters OBA-4, OBA-5, OBA-7, OBA-8, the Niagara River, and the Gill Creek stilling well. During the monitoring activity it was noted that A and B zone well water levels varied little when compared to the Niagara River stage changes. It was also noted that the C and CD zone hydraulic heads showed more variation, on the order of 0.3 to 0.5 feet, when compared to a one foot change in the Niagara River level (WCC, 1992a). This indicates these zones are in communication with the river.

Since the CD zone is in good communication with the Niagara River and is the primary source of groundwater to the Olin production wells it can be inferred that the production well pumping impacts the Niagara River by drawing groundwater toward the wells and away from the river. Groundwater elevation maps of the CD zone from the WCC (1992b) and WCC (1986) confirm this by showing that west of Gill Creek, groundwater movement is from the Niagara River towards the Olin production wells.

Groundwater elevation maps of the B zone, D zone, and F zone beneath the DuPont facility (WCC, 1986) show that groundwater flows north from the Niagara River toward the DuPont and Olin facilities. This flow is mainly due to the man-made diversion systems north and northeast of the Olin and DuPont Facilities but may be slightly affected by the pumping of the Olin production wells.

5.0 CONCLUSIONS AND RECOMMENDATIONS

The remediation efforts at the DuPont facility have limited impacts on groundwater flow and contamination beneath the Olin facility. DuPont's A zone remediation system is capturing only a small portion of Olin's groundwater contamination. DuPont's bedrock remediation system, which uses the pumping of the Olin production wells, captures the B zone groundwater west of well OBA 7B and most of the CD zone groundwater beneath the Olin facility.

In order to better evaluate the effects of the DuPont's A zone remediation system on the Olin facility's groundwater, an A zone groundwater head distribution map should be produced that incorporates both the DuPont and Olin facilities. This will provide the necessary capture zone information and aid in the design of an A zone remediation system at the Olin facility.

A large area of B zone groundwater beneath the Olin facility is not being captured by the site's production wells. Increasing the pumping rate of the production wells from 500 gpm to 1500 gpm did not increase the B zone capture zone appreciably. It is necessaria to evaluate new extraction locations at the Olin Facility which will capture B zone contamination that is not being presently remediated.

Printed on Recycled Paper

Most of the CD zone groundwater beneath the Olin facility is being captured by the site's production wells. It is not clear whether the northeast and southeast corners of the facility are not being captured at the current pumping rate. In order to fully capture the CD zone groundwater contamination beneath the Olin facility the Olin production need to be pumped at higher rates.

The D and F zones have not been evaluated below the Olin facility. WCC claims that evidence of upward gradients in the D and F zones makes it improbable that these zones are contaminated. Studies at the adjacent DuPont facility show that these zones have organic contamination at levels exceeding State and Federal MCLs. Isoconcentration maps of this organic contamination (WCC, 1992b) show that a high probability exists that D and F zone contamination will also be present beneath the Olin facility. The nature and extent of the D and F zone groundwater beneath the Olin facility needs to be assessed.

If you have any questions regarding this submittal please call me or Michael Valentino at (212) 393-9634.

Sincerely,

Pamela J. Philip

CDM Federal Programs Corporation
Pamela J. Philip
Work Assignment Manager

Printed on Recycled Paper

ATTACHMENT 1

REFERENCES

CDM Federal Programs, 1993, RFI Groundwater Contamination Characterization. August 1993.

Woodward Clyde Consultants, 1992a, Interim Report for the Olin Buffalo Avenue Plant RCRA Facility Investigation. February 1992.

Woodward Clyde Consultants, 1992b, DuPont Niagara Plant Groundwater Remediation System, Quarterly Report - Third Quarter 1992. November 1992.

Woodward Clyde Consultants, 1990, Work Plan, Olin Buffalo Avenue Plant RFI, Niagara Falls, New York. February 1990.

Woodward Clyde Consultants, 1989a, Gill Creek Sediment Study, Niagara Falls, New York. April 1989.

Woodward Clyde Consultants, 1989b, Final Report, DuPont Niagara Falls Plant, Interim Remediation Program. September 1989.

Woodward Clyde Consultants, 1988a, Evaluation of Overburden Remediation System, DuPont Niagara Plant. August 1988.

Woodward Clyde Consultants, 1988b, Groundwater Assessment, Olin Chemicals Buffalo Avenue Plants, Niagara Falls, New York. October 1988.

Woodward Clyde Consultants, 1987, J-Zone Investigation, DuPont Niagara Plant, Niagara Falls, New York. June 1987.

Woodward Clyde Consultants, 1986, The Hydraulic Impact of the Olin Production Wells, E.I. DuPont de Nemours & Co., Niagara Falls, New York. April 1986: 11 pp.

Woodward Clyde Consultants, 1985, Final Report, Pump Test Program, October 1984, Niagara Plant Site, Niagara Falls, New York. June 1985.

Woodward Clyde Consultants, 1984, Investigation of the Hydraulic Connection Between the A-Zone and B-Zone, Niagara Plant Site, Niagara Falls, New York. October 1984.

Woodward Clyde Consultants, 1983, Geohydrologic Investigations, Niagara Plant, Niagara Falls, New York. December 1983.