Elton Crossing (Melrose C - Family)
432 East 162nd Street (899 Elton Avenue)
BRONX, NEW YORK

Periodic Review Report
April 16, 2022 - April 16, 2023

NYSDEC Brownfield Cleanup Program Site Number: C203073
AKRF Project Number: 11901

Prepared for:

New York State Department of Environmental Conservation
Division of Environmental Remediation, Bureau B
625 Broadway
Albany, New York 12233

On Behalf of:

Elton Crossing Associates, L.P.
Elton Crossing Moderate Associates, LLC
and
Elton Crossing LIHTC Associates, LLC
902 Broadway, 13th Floor
New York, New York 10010

Prepared by:

AKRF, Inc.
440 Park Avenue South, 7th Floor
New York, New York 10016
212-696-0670

MAY 2023

TABLE OF CONTENTS

P.E. CERTIFICATION iii
EXECUTIVE SUMMARY iv
1.0 Site Overview 1
1.1 Site History 1
1.2 Site Redevelopment 1
1.3 Geology and Hydrogeology 1
1.4 Nature and Extent of Contamination Prior to Remediation 1
1.4.1 Pre-Remedial Soil/Fill Contamination 2
1.4.2 Pre-Remedial Groundwater Contamination 6
1.4.3 Pre-Remedial Soil Vapor Contamination 6
2.0 SITE REMEDIATION 8
2.1 Contaminated Materials Removal and Endpoint Sampling 8
2.2 Import Soil/Fill Sample Analytical Results 10
2.3 Reuse Soil/Fill Sample Analytical Results 10
2.4 Completion of Remediation Activities 11
3.0 POST-REMEDIAL CONSTRUCTION ACTIVITIES 12
3.1 Post-Remedial Construction Activities – December 2016 Through June 2018 12
3.2 Soil Vapor Intrusion Evaluation (SVIE) 12
3.3 Post-Remedial Construction Activities – December 2019 Through October 2020 12
4.0 SITE MANAGEMENT REQUIREMENTS 13
4.1 Institutional Controls (ICs) 13
4.2 Engineering Controls (ECs) 13
4.2.1 Composite Cover System 13
4.2.2 Sub-Slab Depressurization System (SSDS) 14
5.0 REMEDY PERFORMANCE EVALUATION AND MAINTENANCE 16
5.1 Site-Wide Inspection 16
5.2 Composite Cover System Inspection and Maintenance 16
5.3 Sub-Slab Depressurization System (SSDS) Inspection 16
6.0 CONCLUSIONS AND RECOMMENDATIONS 17

TABLES

Table 1 – Pre-Remedial Soil/Fill Exceedances of Soil Cleanup Objectives (SCOs)
Table 2 – Track 4 Site-Specific Soil Cleanup Objectives (SSSCOs)
Table 3 – Off-Site Soil/Fill Disposal Summary

FIGURES

Figure 1 – Site Location
Figure 2 – Site Plan
Figure 3 – Composite Cover System Plan

APPENDICES

Appendix A – Essen Medical Center Plumbing Details and Drawings
Appendix B – Sub-Slab Depressurization System (SSDS) As-Built Drawings
Appendix C – Site-Wide Inspection Log
Appendix D – Composite Cover System Inspection Log and Photographic Log
Appendix E – Institutional Control (IC) and Engineering Control (EC) Certification Form

P.E. CERTIFICATION

I, Michelle Lapin, P.E., am currently a registered Professional Engineer licensed by the State of New York. I had primary direct responsibility for implementation of the Site Management Plan (SMP) protocols, and I certify that the documentation of site management activities is accurately presented in the Periodic Review Report (PRR) for the Elton Crossing (Melrose C – Family) site, [BCP Site No. C203073 (the "Site")].

For each Institutional Control (IC) and Engineering Control (EC) identified for the Site, I certify that all the following statements are true:

- The inspection of the Site to confirm the effectiveness of the ICs and ECs (collectively, the "controls") required by the remedial program was performed under my direction;
- The controls employed at this Site are unchanged from the date they were put in place, or last approved by the New York State Department of Environmental Conservation (NYSDEC or the "Department");
- Nothing has occurred that would impair the ability of the controls to protect the public health and environment;
- Nothing has occurred that would constitute a violation or failure to comply with any SMP for the controls;
- Access to the Site will continue to be provided to the Department to evaluate the remedy, including access to evaluate the continued maintenance of the controls;
- If a financial assurance mechanism is required under the oversight document for the Site, the mechanism remains valid and sufficient for the intended purpose under the document;
- Use of the Site is compliant with the Environmental Easement (EE);
- The ECs are performing as designed and are effective;
- To the best of my knowledge and belief, the work and conclusions described in this certification are in accordance with the requirements of the Site remedial program and generally accepted engineering practices; and
- The information presented in this report is accurate and complete.

I certify that all information and statements in this certification form are true. I understand that a false statement made herein is punishable as a Class "A" misdemeanor, pursuant to Section 210.45 of the Penal Law. I, Michelle Lapin, P.E., of 440 Park Avenue South, 7th Floor, New York, NY 10016, am certifying as the Owner's Designated Site Representative for the Site.

Michelle Lapin, P.E.	May 10, 2023	
NYS Professional Engineer	Date	Signature/Stamp

EXECUTIVE SUMMARY

This Periodic Review Report (PRR) was prepared for the Elton Crossing (Melrose C – Family) site located at 432 East 162nd Street (899 Elton Avenue) in the Bronx, New York, hereafter referred to as the "Site". The Site is identified on the New York City Tax Map as Bronx Borough Block 2383, Lot 19 (former Lots 19, 25, 27, 30, 35, 8900, and a formerly unmapped section of Melrose Crescent from East 161st Street to East 162nd Street). The Site is an approximately 0.695-acre parcel bounded by: East 162nd Street to the north, followed by a construction site; East 161st Street to the south, followed by residential and commercial buildings; Elton Avenue, followed by Boricua College and the O'Neill Triangle Park to the east; and residential apartment buildings and open land to the west.

The development project included the construction of an approximately 171,017-gross square foot, mixed-use, commercial and residential building with an interior parking area on the northwestern portion, a partial cellar on the northeastern portion, and a central exterior parking area and courtyard. The building contains: mechanical space in the partial cellar; a residential lobby, a commercial space occupied by Essen Medical Center, parking, and a courtyard on the ground floor; and residential apartments above. A Site Location Map is provided as Figure 1 and a Site Plan is provided as Figure 2.

The Site was investigated and remediated under the New York State Department of Environmental Conservation (NYSDEC) Brownfield Cleanup Program (BCP) in accordance with Brownfield Cleanup Agreement (BCA) Index No. C203073-11-14, which was executed in November 2014 and amended in October 2016. The Site was remediated to Track 4 Site-Specific Soil Cleanup Objectives (SSSCOs) in accordance with the NYSDEC-approved June 2015 Remedial Action Work Plan (RAWP) and Decision Document (DD), as documented in the December 2016 Final Engineering Report (FER). Following completion of remediation and submission of the FER, NYSDEC issued the Certificate of Completion (COC) in December 2016. Post-remedial Site monitoring requirements were established in the NYSDEC-approved December 2016 Site Management Plan (SMP).

The purpose of this PRR is to document and certify that the Site's Engineering Controls (ECs) and Institutional Controls (ICs) have been implemented in accordance with the SMP and all relevant Brownfield Cleanup Program (BCP) requirements during the 12-month periodic review reporting period from April 16, 2022 to April 16, 2023.

The results of the PRR are included herein. The remedy remains effective and protective of human health and the environment, and remains in compliance with the requirements established in the SMP. Periodic inspections, including the annual Site-wide composite cover system and inspections of the passively operating Sub-Slab Depressurization System (SSDS), will continue to be performed in accordance with the SMP.

1.0 SITE OVERVIEW

1.1 Site History

The Site was developed historically with: an automobile garage from 1927 to 1940; a factory in 1945; freezer and oven mobile units in 1961; a metal works from at least 1969 to 1978; and Blasco Supply Company from 2000 to 2005 on former Lot 19. Former Lot 25 was developed with an automobile garage in 1921 and a funeral home from at least 1927 to 1984. Former Lot 27 was developed with an undertaker and a multi-story residential building from at least 1969 to 1979. Former Lot 29 was developed with a beauty shop, a lawyers' office, a dentist, and a multi-story residential building from 1927 to 1971. Former Lot 35 was developed with: the Elton Glass Works, Soenning Plumbing and Heating, and a butcher and glazer in 1927; and stores and a multi-story residential building in 1965. The remaining former lots (southern and eastern portion of the Site) were developed historically as multi-story residences with cellars that likely contained petroleum storage tanks. A Site Location Map is provided as Figure 1.

1.2 Site Redevelopment

The former building on the northwestern portion of the Site (former Lot 19) was demolished in June 2015. The remediation allowed for redevelopment of the Site for restricted residential use as described in 6 New York Codes, Rules, and Regulations (NYCRR) Part 375-1.8(g)(2)(ii), which may include industrial, commercial, and certain institutional uses, including but not limited to, multi-family residential, educational, and childcare uses. The development project included the construction of an approximately 171,017-gross square foot, mixed-use, commercial and residential building with an interior parking area on the northwestern portion, a partial cellar on the northeastern portion and a central exterior courtyard. The building contains: mechanical space in the partial cellar; a residential lobby, commercial spaces, parking, and a courtyard on the ground floor; and residential apartments above. A Site Plan showing the extent of the Site building is provided as Figure 2.

1.3 Geology and Hydrogeology

The Site elevation is approximately 30 feet above the National Geodetic Vertical Datum of 1929 (NGVD) (an approximation of mean sea level). The topography of the Site is relatively level.

Based on subsurface investigations conducted at the Site prior to development, soil/fill at the Site was composed of between approximately 3 to 9 feet of fill comprising sand, silt, gravel, concrete, brick, plastic, glass, concrete, and asphalt, underlain by apparent native sand and gravel on top of Inwood Marble bedrock. A February 2014 geotechnical investigation by Tectonic Engineering and Surveying Consultants identified bedrock beneath the Site at depths ranging between 7.5 and 23 feet below grade, which was observed during excavation activities at the Site.

During AKRF's February and March 2015 Supplemental Remedial Investigation (SRI), groundwater was encountered within bedrock fractures between 14.72 and 17.15 feet below grade. Based on Site-specific groundwater measurements, groundwater flow beneath the Site is generally to the northwest. Regional groundwater flow is generally to the south towards the Harlem River, located approximately 1.7 miles south of the Site. Groundwater in the Bronx is not used as a source of potable water.

1.4 Nature and Extent of Contamination Prior to Remediation

Based on the Remedial Investigation (RI) conducted in April 2014 and the SRI conducted in February and March 2015, the fill layer across the Site was contaminated with polycyclic aromatic hydrocarbons (PAHs), pesticides, polychlorinated biphenyls (PCBs), and metals. In addition, petroleum-contaminated soil/fill was encountered from approximately 8 to 17 feet below surface grade on former

Lot 29 (northeastern portion of the Site). The petroleum contamination was attributed to the former fuel oil use at the Site. The elevated levels of pesticides indicated the prior usage and possible storage of pesticides in the cellar(s) of the former Site structure(s). The contaminants in the soil/fill were not observed to be migrating and were documented to have no adverse effect on groundwater quality. Elevated levels of volatile organic compounds (VOCs) were detected in soil vapor beneath former Lot 19 (northwestern portion of the Site) and on the southern portion of the Site.

1.4.1 Pre-Remedial Soil/Fill Contamination

A total of 43 soil/fill samples were submitted for laboratory analysis during the RI and SRI. Soil sample analytical results were compared to the 6 NYCRR Unrestricted Use Soil Cleanup Objectives (UUSCOs) and Restricted Residential Soil Cleanup Objectives (RRSCOs). RI and SRI soil/fill sample concentrations above respective UUSCOs and/or RRSCOs are summarized in Table 1.

Table 1
Pre-Remedial Soil/Fill Exceedances of Soil Cleanup Objectives (SCOs)

Analyte	Soil Sample ID	UUSCO (mg/kg)	RRSCO (mg/kg)	Concentration (mg/kg)
Benzo(a)anthracene	SB-2 (0-2)	1	1	1.15
	SB-3 (8-10)			2.72
	SB-5 (0-2)			1.16
	SB-6 (5-7)			2.24
	SB-8 (0-2)			6.23 D
	SB-8 (7-9)			4.3 D
	SB-8 (7-9)B			3.45
	SB-10 (0-2)			1.81 J
	SB-10 (0-2)B			4.8 JD
	SB-13 (0-2)			2.03
Benzo(a)pyrene	SB-2 (0-2)	1	1	1.3
	SB-3 (8-10)			2.77
	SB-5 (0-2)			1.24
	SB-6 (5-7)			2.15
	SB-8 (0-2)			6.87 D
	SB-8 (7-9)			4.39 D
	SB-8 (7-9)B			3.63
	SB-10 (0-2)			1.89 J
	SB-10 (0-2)B			4.99 JD
	SB-13 (0-2)			1.97
Benzo(b)fluoranthene	SB-2 (0-2)	1	1	1.66
	SB-3 (8-10)			3.01
	SB-5 (0-2)			1.46
	SB-6 (5-7)			2.49
	SB-8 (0-2)			7.47 D
	SB-8 (7-9)			5.01 D
	SB-8 (7-9)B			4.38 D
	SB-10 (0-2)			2.07
	SB-10 (0-2)B			5.69 D
	SB-13 (0-2)			2.46
Benzo(k)fluoranthene	SB-3 (8-10)	0.8	3.9	1.12
	SB-6 (5-7)			0.895

Table 1
Pre-Remedial Soil/Fill Exceedances of Soil Cleanup Objectives (SCOs)

Analyte	Soil Sample ID	UUSCO (mg/kg)	RRSCO (mg/kg)	Concentration (mg/kg)
	SB-8 (0-2)			2.56 J
	SB-8 (7-9)			1.85
	SB-8 (7-9)B			1.4
	SB-10 (0-2)B			1.89 J
	SB-13 (0-2)			0.886
Chrysene	SB-2 (0-2)	1	3.9	1.38
	SB-3 (8-10)			2.91
	SB-5 (0-2)			1.23
	SB-6 (5-7)			2.5
	SB-8 (0-2)			6.49 JD
	SB-8 (7-9)			4.79 D
	SB-8 (7-9)B			3.63
	SB-10 (0-2)			2.04
	SB-10 (0-2)B			5.34 D
	SB-13 (0-2)			2.38
Dibenz(a,h)anthracene	SB-3 (8-10)	0.33	0.33	0.462
	SB-6 (5-7)			0.631
	SB-8 (0-2)			1.34 J
	SB-8 (7-9)			0.858
	SB-8 (7-9)B			0.675
	SB-10 (0-2)			0.453
	SB-10 (0-2)B			0.822
	SB-13 (0-2)			0.531
	SSB-1 (5-7)			0.406 J
Indeno(1,2,3-cd)pyrene	SB-2 (0-2)	0.5	0.5	0.918
	SB-3 (8-10)			1.68
	SB-5 (0-2)			0.908
	SB-6 (5-7)			1.78
	SB-8 (0-2)			4.12 JD
	SB-8 (7-9)			3.27
	SB-8 (7-9)B			2.61
	SB-10 (0-2)			1.25 J
	SB-10 (0-2)B			3.21 J
	SB-13 (0-2)			1.54
	SSB-1 (5-7)			1.23 J
Xylenes	SB-13 (8-10)	0.26	100	0.769
Arsenic	SB-10 (0-2)B	13	16	18.4 J
	SSB-1 (0-2)			16.1 c
	SSB-1 (5-7)			14.5
	SS-1			13.3
Barium	SB-3 (0-2)	350	400	588
	SB-3 (8-10)			487
	SB-4 (0-2)			592
	SB-4 (8-10)			923
	SB-5 (0-2)			592
	SB-6 (5-7)			2,900

Table 1
Pre-Remedial Soil/Fill Exceedances of Soil Cleanup Objectives (SCOs)

Analyte	Soil Sample ID	UUSCO (mg/kg)	RRSCO (mg/kg)	Concentration (mg/kg)
	SB-8 (0-2)			397 J
	SB-8 (0-2)FD			389
	SB-8 (7-9)			1,580 J
	SB-8 (7-9)B			554 J
	SB-10 (0-2)			999 J
	SB-10 (0-2)B			716 J
	SB-13 (0-2)			383
	SB-13 (8-10)			668
	SB-14 (0-2)			2,200
	SSB-1 (0-2)			792
	SSB-1 (5-7)			492
Cadmium	SB-4 (8-10)	2.5	4.3	6.8
	SSB-1 (0-2)			792
	SSB-1 (5-7)			492
Chromium	SB-2 (8-10)	30	180	33
	SB-4 (0-2)			34.9
	SB-5 (0-2)			40.4 b
	SB-7 (0-2)			36.9
	SB-7 (5-7)			35.3
	SB-10 (0-2)B			36.5 Jb
	SB-10 (8-10)			44.7 J
	SB-10 (8-10)FD			70.2 J
	SB-13 (8-10)			31.2
Copper	SB-1 (0-2)	50	270	60.7
	SB-1 (8-10)			267
	SB-4 (8-10)			51.9
	SB-5 (0-2)			71.5 b
	SB-7 (0-2)			329
	SB-7 (5-7)			54.6 Jb
	SB-10 (0-2)B			60.8
	SB-13 (8-10)			198 c
	SSB-1 (0-2)			270
	SSB-1 (5-7)			95.3
	SS-1			130 c
Lead	SB-2 (0-2)	63	400	201
	SB-3 (0-2)			199
	SB-3 (8-10)			97.9
	SB-4 (0-2)			598
	SB-4 (8-10)			2,760
	SB-5 (0-2)			678 b
	SB-6 (5-7)			156
	SB-8 (0-2)			667 Jb
	SB-8 (0-2)FD			300 J
	SB-8 (7-9)			465
	SB-8 (7-9)B			565
	SB-9 (0-2)			245

Table 1
Pre-Remedial Soil/Fill Exceedances of Soil Cleanup Objectives (SCOs)

Analyte	Soil Sample ID	UUSCO (mg/kg)	RRSCO (mg/kg)	Concentration (mg/kg)
	SB-10 (0-2)			452 J
	SB-10 (0-2)B			3,530 Jb
	SB-11 (0-2)			136
	SB-13 (0-2)			220
	SB-13 (8-10)			683
	SB-14 (0-2)			935 c
	SSB-1 (0-2)			1,940
	SSB-1 (5-7)			373
	SSB-1 (7-9)			100
	SSB-2 (5-7)			450
	SSB-2 (8-10)			354 c
	SS-1			354 c
Mercury	SB-4 (8-10)	0.18	0.81	0.95
	SB-8 (0-2)			2.2 J
	SB-8 (0-2)FD			1.2 J
	SB-8 (7-9)			0.29
	SB-10 (0-2)			0.2 J
	SB-10 (0-2)B			1.8 J
	SB-13 (0-2)			0.39
	SB-13 (8-10)			34.8
	SSB-1 (0-2)			44
	SSB-1 (5-7)			5.3
	SSB-1 (7-9)			0.82
Nickel	SB-5 (0-2)	30	310	31.9
	SB-7 (5-7)			30.5
	SB-10 (0-2)B			32.4 J
	SB-10 (8-10)FD			52.3 J
	SSB-1 (0-2)			34.7
	SSB-1 (5-7)			43.1
	SSB-1 (7-9)			30.6
	SSB-3 (5-7)			38.6
	SS-1			35.7
Selenium	SB-10 (0-2)B	3.9	180	5.2 b
Silver	SB-4 (8-10)	2	180	17.1
Zinc	SB-2 (0-2)	109	10,000	197
	SB-3 (0-2)			274
	SB-3 (8-10)			273
	SB-4 (0-2)			637
	SB-4 (8-10)			1,470
	SB-5 (0-2)			519 b
	SB-6 (5-7)			895
	SB-8 (0-2)			1,220 Jb
	SB-8 (0-2)FD			214 J
	SB-8 (7-9)			669
	SB-8 (7-9)B			569
	SB-9 (0-2)			431

Table 1
Pre-Remedial Soil/Fill Exceedances of Soil Cleanup Objectives (SCOs)

Analyte	Soil Sample ID	UUSCO (mg/kg)	RRSCO (mg/kg)	Concentration (mg/kg)
	SB-10 (0-2)			463 J
	SB-10 (0-2)B			1,780 Jb
	SB-10 (8-10)			124
	SB-11 (0-2)			153
	SB-13 (0-2)			192
	SB-13 (8-10)			1,220
	SB-14 (0-2)			921
	SSB-1 (0-2)			1,280
	SSB-1 (5-7)			1,320
	SSB-1 (7-9)			404
	SSB-2 (8-10)			633
	SS-1			833

Notes:
mg/kg – milligrams per kilogram = parts per million (ppm)
b – The reported concentration is from the second analytical run on the sample.
c – Elevated detection limit due to dilution required due to the presence of a high-interfering element.
J – The analyte was detected above the laboratory reporting limit; the reported concentration is estimated and may be inaccurate or imprecise.
D – The reported concentration is the result of a diluted analysis.
Jb – The reported concentration is from the second analytical run and is estimated.
JD – The reported concentration is the result of a diluted analysis and is estimated.
FD – The sample is a field duplicate sample.
B – The Sample is a blind duplicate sample.

Additionally, soil/fill containing lead at a toxic characteristic leaching procedure (TCLP) concentration of 5.7 milligrams per liter (mg/L) on the northeastern portion of the Site, above the hazardous waste threshold of 5 mg/L, was identified during in-situ waste classification sampling. The hazardous waste was subsequently delineated to an approximately 30- by 40-foot area.

1.4.2 Pre-Remedial Groundwater Contamination

Three groundwater samples were collected for laboratory analysis during the SRI. Laboratory analytical results were compared to NYSDEC Division of Water – Technical and Operational Guidance Series 1.1.1 (TOGS) Ambient Water Quality Standards and Guidance Values (AWQSGVs), although groundwater in the Bronx is not used as a potable water source.

The VOC chloroform was detected in one groundwater sample above its AWQSGV. Four metals in the total (unfiltered) analysis (iron, magnesium, manganese, and sodium) and three metals in the dissolved (filtered) analysis (iron, magnesium, and sodium) were detected in at least one of the groundwater samples above their respective AWQSGVs. These metals may be naturally occurring and are typical of groundwater quality in the Bronx. It was concluded that they were not likely related to a spill or release.

1.4.3 Pre-Remedial Soil Vapor Contamination

Although there are currently no regulatory or published guidance values for VOCs in soil vapor, soil vapor data was used to assess the potential for exposure to receptors and to help define the

nature and extent of contamination at the Site. Six soil vapor samples were collected for laboratory analysis during the RI and one soil vapor sample was collected for laboratory analysis during the SRI.

Thirty-one VOCs were detected in the samples collected during the RI and 13 VOCs were detected in the sample collected during the SRI. VOCs associated with petroleum [including benzene, toluene, ethylbenzene, xylenes (collectively referred to as BTEX), 1,2,4- and 1,3,5-trimethylbenzene, cyclohexane, n-heptane, n-hexane, 4-ethyltoluene, and 2,2,4-trimethylpentane] were detected at concentrations up to 123,000 micrograms per cubic meter ($\mu g/m^3$). Solvent-related VOCs (including styrene, PCE, and toluene) were detected at concentrations up to 871 $\mu g/m^3$.

2.0 SITE REMEDIATION

Site remediation was conducted in accordance with the June 2015 NYSDEC-approved RAWP. Remedial activities included: (1) a Track 4 cleanup to achieve SSSCOs; and (2) implementation of ICs and ECs. All post-excavation soil/fill endpoint samples met the Track 4 SSSCOs. A list of the SSSCOs for the primary contaminants of concern and applicable land use for the Site are provided in Table 2.

Table 2
Track 4 Site-Specific Soil Cleanup Objectives (SSSCOs)

Compound	Track 4 SSSCO
VOCs	Restricted Residential Soil Cleanup Objectives
Total SVOCs	500 ppm
Lead	1,200 ppm
Mercury	3 ppm
Pesticides	Commercial Soil Cleanup Objectives
Polychlorinated Biphenyls	Commercial Soil Cleanup Objectives
Other Metals	Commercial Soil Cleanup Objectives
Notes: VOCs – volatile organic compounds SVOCs – semivolatile organic compounds ppm – parts per million	

The completed remedy was documented in the NYSDEC-approved December 2016 FER and post-remediation Site management requirements were established in the NYSDEC-approved December 2016 SMP.

2.1 Contaminated Materials Removal and Endpoint Sampling

To achieve Track 4 SSSCOs, soil/fill was excavated and either disposed of off-site or re-used on-site to meet the required Site grades for redevelopment. The required in-situ pre-characterization sampling or ex-situ sampling for re-use was conducted prior to disposal or re-use, respectively. The following materials were removed from the Site (in addition to the materials associated with the demolition of the former Site structures): 14,068.21 tons of non-hazardous and 342.74 tons of hazardous soil/fill; five underground storage tanks (USTs) (one 550-gallon UST, one 1,000-gallon UST, two 275-gallon USTs, and one 1,080-gallon UST), one 550-gallon aboveground storage tank (AST), and associated tank contents [1,950 gallons of a petroleum product/water mixture from the USTs, 200 gallons of a petroleum product/water mixture from the AST, and one 55-gallon drum (weighing approximately 300 pounds) of tank sludge]. Excavation of hazardous soil/fill occurred within an approximately 30- by 40-foot area in Disposal Grid TP-4 on the northeastern portion of the Site from surface grade to a depth of approximately 14 feet below surface grade. Non-hazardous soil/fill was excavated across the Site from surface grade to bedrock at the deepest locations (approximately 8 to 20 feet below surface grade). Table 3 summarizes the quantity of soil/fill excavated and facilities where the material was disposed of off-site.

Table 3
Off-Site Soil/Fill Disposal Summary

Disposal Facility	Disposal Facility Location	Waste Stream	Tons
Phase III Environmental, LLC	Palmerton, Pennsylvania	PA Clean	6,134.00
		PA Regulated	7,423.88
Impact Environmental	Lyndhurst, New Jersey	NJ Residential	423.29
Republic Environmental Systems	Hatfield, Pennsylvania	Hazardous Lead	342.74
Atlantic County Utilities Authority	Egg Harbor Township, New Jersey	Elevated Pesticides (non-hazardous)	68.26
		Elevated Mercury (non-hazardous)	18.78
		Total	**14,410.95**

Following the removal of five USTs encountered during remedial excavation, tank excavation endpoint samples were collected in accordance with the NYSDEC-approved RAWP and the NYSDEC Technical Guidance for Soil Investigation and Remediation (DER-10). One soil/fill sample was collected from each of the four sidewalls and at the bottom of each tank grave, with the exception of the 1,000-gallon UST in Disposal Grid TP-12, where the tank excavation extended to bedrock and a bottom sample could not be collected. The tank excavation endpoint samples were designated with the prefix "UST", a number (1-5 in the order the tank was encountered during excavation activities), an "N", "S", "E", "W", or "B" for the cardinal directions north, east, south, west, and the bottom of the excavation that the sample was collected from, and the sampling date. UST endpoint soil samples were analyzed for the Commissioner's Policy (CP)-51 List of VOCs and SVOCs, as approved by the NYSDEC project manager.

UST Endpoint Sampling

All of the UST endpoint soil sample results met SSSCOs. Estimated concentrations of VOCs at concentrations below UUSCOs were detected in soil/fill samples UST-1/2-S-V 20150728, UST-3/4-N-V 20150820, and UST-5-S-V 20150824. The SVOCs benzo(k)fluoranthene and chrysene were detected above UUSCOs in soil/fill sample UST-3/4-W-C 20150824. The SVOCs benzo(a)anthracene, benzo(a)pyrene, benzo(b)fluoranthene, benzo(k)fluoranthene, chrysene, dibenzo(a,h)anthracene, and indeno(1,2,3-cd)pyrene were detected above UUSCOs and RRSCOs in soil/fill samples UST-3/4-W-C 20150824, UST-5-B-C 20150824, UST-5-E-C 20150824, UST-5-N-C 20150824, and/or UST-5-S-C 20150824.

Remedial Performance Site-Wide Endpoint Sampling

After completion of soil/fill excavation in October and December 2015, and February and March 2016, the residual management zone (RMZ) elevation was surveyed and endpoint samples were collected and analyzed to assess soil/fill concentrations relative to the NYSDEC UUSCOs, RRSCOs, and SSSCOs beneath the new Site building concrete foundation slabs. Analysis of the samples indicated that residual soil/fill complied with the SSSCOs. The PAHs benzo(a)anthracene, benzo(a)pyrene, benzo(b)fluoranthene, benzo(k)fluoranthene, chrysene, and indeno(1,2,3-cd)pyrene were detected in soil/fill sample EP-4 20160311 at concentrations above UUSCOs and/or RRSCOs, but below SSSCOs. The pesticides cis-chlordane, dieldrin, endrin, heptachlor, 4,4'-DDD, 4,4'-DDE, and/or 4,4'-DDT were detected at concentrations (some estimated) above UUSCOs in endpoint soil/fill samples EP-1 20160311, EP-2 20160225, EP-4 20160311, EP-5 20160311, EP-6 20160311, EP-7-B 20151023, EP-

7-E 20151023, EP-7-N 20151023, EP-7-S 20151023, EP-7-W 20151023, and EP-X 20160311 (blind duplicate of EP-3 20160311). The pesticide dieldrin was also detected above the RRSCO in soil/fill sample EP-7-E 20151023 and the associated blind duplicate sample EP-X 20151023. The metals copper, lead, and/or mercury were detected in the endpoint soil/fill samples EP-X 20151023, EP-7-E 20151023, EP-5 20160311, and EP-7-W 20151023 at concentrations above respective UUSCOs, but below RRSCOs and SSSCOs.

Endpoint samples with concentrations exceeding their respective UUSCOs and RRSCOs are shown on Figure 8 of the SMP.

2.2 Import Soil/Fill Sample Analytical Results

Approximately 5,100 cubic yards of soil/fill were imported for use as backfill across the Site. Prior to importation, soil/fill samples were collected in accordance with the NYSDEC-approved RAWP and DER-10. The import soil samples were designated with the prefix "ISP" (import stockpile), a number, the letter "V" for the volatile grab samples or a "C" for the five-point composite samples, and the sampling date in "yyyymmdd" format. The six soil/fill samples (ISP-1 through ISP-6) were analyzed for VOCs by EPA Method 8260, SVOCs by EPA Method 8270, PCBs by EPA Method 8082, pesticides by EPA Method 8081, TAL metals by EPA Method 6000/7000 series, total cyanide, and hexavalent chromium by EPA Method 7196. VOCs were not detected in samples ISP-2-V1 0151016, ISP-2-V3 0151016, ISP-2-V4 0151016, and ISP-2-V5 0151016 and PCBs were not detected in samples ISP-5-CX 20160425, ISP-5B-C2 20160425, ISP-6A-C1 20150512, and ISP-6-CX 20150512. Several VOCs were detected in the remainder of the soil/fill samples at estimated concentrations below UUSCOs, RRSCOs, and SSSCOs. Acetone was detected in sample ISP-2-V7 20151016 at a concentration of 0.087 mg/kg, above its UUSCO of 0.05 mg/kg. SVOCs were detected at concentrations in the samples below UUSCOs, RRSCOs, and SSSCOs. Pesticides were detected in all samples analyzed. The pesticide P,P'-DDT was detected above its UUSCO of 0.0033 mg/kg, but below RRSCOs and SSSCOs in all import soil samples (except ISP-2-C1 20151016) at concentrations between 0.0049 mg/kg and 0.0149 mg/kg. The pesticide P,P'-DDE was detected above its UUSCO of 0.0033 mg/kg in samples ISP-1-C1 20150930, ISP-1-C2 20150930, ISP-3-C1 20160118, and ISP-5B-C2 20160425 at concentrations ranging from 0.00381 mg/kg to 0.00526 mg/kg. Dieldrin was also detected in import sample ISP-5B-C2 20160425 at a concentration of 0.0551 mg/kg, above its UUSCO, but below its RRSCO and its SSSCO. The remaining pesticides were detected below UUSCOs. Metals were not detected at concentrations above UUSCOs, RRSCOs, or SSSCOs in the following import samples: ISP-1-C2 20150930, ISP-2-C3 20151016, ISP-6A-C1 20160512, and ISP-6-CX 20160512. Select metals, including copper in two samples, lead in eight samples, mercury in six samples, and zinc in two samples were detected above UUSCOs, but below RRSCOs and SSSCOs, in the following samples: ISP-1-C1 20150930, ISP-2-C1 20151016, ISP-2-C2 20151016, ISP-3-C1 20160118, ISP-3-X 20160118, ISP-3-C2 20160118, ISP-3-C3 20160118, ISP-5A-C1 20160425, ISP-5-CX 20160425, ISP-5B-C2 20160425, and ISP-6B-C2 20160512. Metals were not detected in any of the reuse samples above RRSCOs or SSSCOs.

A summary of import sample analytical results is provided in Tables 12a through 12e of the FER.

2.3 Reuse Soil/Fill Sample Analytical Results

Fourteen stockpiles were sampled at the Site for use as backfill. The reuse soil/fill sample analytical results were designated with the prefix "SP" (stockpile), a number (3-15 in the order the stockpile was sampled), a "V" for the volatile grab samples and a "C" for the five-point composite samples, and the sampling date. Stockpiles SP-5, SP-6B, SP-7, and SP-8 were deemed unacceptable for reuse on-site

and were disposed of off-site in accordance with the NYSDEC-approved RAWP at approved disposal facilities.

VOCs and SVOCs were not detected above UUSCOs or RRSCOs in any of the soil/fill stockpiles reused on-site. Select PCBs were detected in reuse sample SB-7B-C1 20150924 at a total concentration of 0.226 mg/kg, above the total PCBs UUSCO of 0.1 mg/kg, but below the RRSCO of 0.226 mg/kg. No other PCBs were detected in the soil/fill approved for on-site reuse above UUSCOs or RRSCOs. Pesticides were not detected above UUSCOs or RRSCOs in the following reuse samples: SP-12-C1 20151221, SP-13A-C1 20160204, or SP-15A-C1 20160225. Dieldrin, P,P'-DDD, P,P'-DDE, and P,P'-DDT were detected above the UUSCO of 0.0033 mg/kg, but below their respective RRSCOs of 13 mg/kg, 8.9 mg/kg, and 7.9 mg/kg at concentrations ranging between an estimated 0.00338 mg/kg and 0.151 mg/kg in the following reuse samples: SP-3A-C1 20150911, SP-3B-C1 20150911, SP-4A-C1 20150914, SP-4A-C-2 20150914 and associated blind duplicate sample SP-4A-XC-2 20150914, SP-5A-C1 20150917, SP-5B-C1 20150917, SP-6A-C1 20150924, SB-6B-C1 20150924, SB-7A 20150924, SB-7B-C1 20150924, SP-9-C1 20151116 and associated blind duplicate sample SP-9-XC 20151116, SP-10A-C1 20151120, SP-10B-C1 20151120, SP-11A-C1 20151221, SP-11B-C1 20151221 and associated blind duplicate sample SP-11B-CX 20151221, SP-13B-C1 20160204 and associated blind duplicate sample SP-13B-CX 20160204, SP-14-C1 20160219 and associated blind duplicate sample SP-14-CX 20160219, SB-15-C1 20160727 and associated blind duplicate sample SP-15-CX 20160727, and SP-15B-C1 20160225.

A summary of reuse soil/fill sample analytical results is provided in Tables 11a through 11e of the FER.

2.4 Completion of Remediation Activities

Remedial activities at the Site concluded in October 2016. The Site was remediated to Track 4 SSSCOs in accordance with the June 2015 NYSDEC-approved RAWP, as documented in the December 2016 NYSDEC-approved FER. As a condition of completing a Track 4 cleanup, long-term Site management requires the implementation of an SMP with ICs and ECs.

3.0 POST-REMEDIAL CONSTRUCTION ACTIVITIES

3.1 Post-Remedial Construction Activities – December 2016 Through June 2018

As documented in the NYSDEC approved September 2018 PRR, post-remedial construction activities occurred at the Site between December 2016 and June 2018. The activities included sampling and import of soil/fill, the removal and replacement of portions of the composite cover system, and the installation of aboveground components of the SSDS. Procedures outlined in the EWP and SMP were strictly adhered to for the work, as detailed in the SMP. Work involving subsurface disturbance was also conducted in accordance with the procedures defined in the Site-specific Health and Safety Plan (HASP) and Community Air Monitoring Program (CAMP). All post-remedial construction activities were detailed in Section 5.0 of the September 2018 NYSDEC-approved PRR.

3.2 Soil Vapor Intrusion Evaluation (SVIE)

Following completion of the new building envelope, an SVIE was conducted in accordance with the October 2018 NYSDEC-approved SVIE Work Plan (SVIEWP) to determine whether the SSDS needed to be activated or the system could remain in a passive state. In November 2018, an SVIE was conducted at the Site in accordance with the SVIEWP. The results of the SVIE, presented in the February 2019 SVIE Report, indicated that contaminants were not present in indoor air at concentrations requiring mitigation. As such, NYSDEC determined that the SSDS could continue to operate passively. The SVIE was detailed in Section 4.0 of the May 2019 NYSDEC-approved PRR.

3.3 Post-Remedial Construction Activities – December 2019 Through October 2020

As documented in the NYSDEC-approved 2020 PRR, interior building renovations were performed between December 2019 and October 2020 in the ground floor commercial space on the eastern and southern portions of the Site so that the space could be used as a medical facility called Essen Medical Associates. The construction activities included interior build-out of the reception area, patient rooms, restrooms, hand wash and slop sinks, and medical device rooms. To connect the existing plumbing risers and drains to the newly-installed restrooms and sinks, trenches were cut in the ground floor concrete slab. After installation of horizontal 4-inch diameter plumbing within the slab, the slab was subsequently restored. The underlying vapor barrier was not exposed or damaged during the work. Plumbing was installed in accordance with the NYC Department of Buildings (NYCDOB)-approved December 2019 *First Floor Sanitary, Vent, and Waste Piping* plans, which are included as Appendix A. Following completion of the interior building renovations in October 2020, the concrete slab was covered with finishing materials including tile, wood, and vinyl.

4.0 SITE MANAGEMENT REQUIREMENTS

The SMP provides a detailed description of all procedures required to manage remaining contamination at the Site after completion of the remedial action (RA). Documented procedures include the following: (1) implementation and management of all ICs and ECs; and (2) performance of periodic inspections, certification of results, and submittal of annual PRRs.

4.1 Institutional Controls (ICs)

Two ICs, the Environmental Easement (EE) [City File Review Number (CFRN) No. 2015000273271] and an SMP, were required by the RAWP to: (1) implement, maintain, and monitor the ECs; (2) prevent future exposure to any remaining contamination; and (3) limit the use and development of the Site to restricted residential uses only. Adherence to the ICs is required by the EE and is being implemented under the SMP. ICs identified in the EE may not be discontinued without an amendment to, or an extinguishment of the EE. The ICs include:

- The Site may be used for restricted residential use.
- All ECs must be operated and maintained as specified in the SMP.
- All ECs must be inspected at a frequency and in a manner defined in the SMP.
- The use of groundwater underlying the Site is prohibited without necessary water quality treatment as determined by the New York State Department of Health (NYSDOH) or the New York City Department of Health and Mental Hygiene (NYCDOH) to render it safe for use as drinking water or for industrial purposes, and the user must first notify and obtain written approval to do so from NYSDEC.
- All applicable environmental or public health monitoring must be performed as defined in the SMP.
- Data and information pertinent to Site management must be reported at the frequency and in a manner as defined in the SMP.
- All activities that will disturb any remaining contaminated material must be conducted in accordance with the SMP.
- Monitoring to assess the performance and effectiveness of the remedy must be performed as defined in the SMP.
- Operation, maintenance, monitoring, inspection, and reporting of any mechanical or physical component of the remedy shall be performed as defined in the SMP.
- Access to the Site must be provided to agents, employees, or other representatives of the State of New York with reasonable prior notice to the property owner to assure compliance with the restrictions identified by the EE.
- In-ground vegetable gardens and farming activities on the Site are prohibited.

4.2 Engineering Controls (ECs)

Two ECs, a composite cover system and a SSDS, were implemented as part of the RA to prevent exposure to residual subsurface contamination.

4.2.1 Composite Cover System

Exposure to any residual contaminated soil/fill is being prevented by an engineered composite cover system. The composite cover system was initially installed in September 2016 during remedial activities and was modified between January and June 2018. The modifications documented in the September 2018 PRR were completed in accordance with the SMP and EWP and are shown on Figure 3. The composite cover system includes the following cover types:

1. Building Slabs: 6 inches of concrete underlain by Grace Florprufe® 120R vapor barrier underlain by a 6-inch to 4-foot layer of ¾-inch gas-permeable aggregate (GPA) stone bedding underlain by geotextile fabric.
2. Elevator Pits: 6 inches of concrete underlain by Grace Preprufe® 300R vapor barrier/waterproofing underlain by a 6-inch to 4-foot layer of ¾-inch GPA underlain by geotextile fabric.
3. Exterior Foundation Walls: concrete foundation wall adjacent to Grace Preprufe® 300R vapor barrier/waterproofing adjacent to compacted subgrade.
4. Parking Area – Type 1: 6 inches of concrete underlain by Florprufe® 120R vapor barrier underlain by compacted subgrade.
5. Parking Area – Type 2: 6 inches of concrete underlain by a demarcation barrier (orange snow fence) underlain by compacted subgrade.
6. Walkway: 6 inches of concrete underlain by a demarcation barrier (orange snow fence) underlain by compacted subgrade.
7. Landscaped Area – Type 1: two feet of clean fill/soil underlain by a demarcation barrier (geotextile fabric), underlain by compacted subgrade.
8. Landscaped Area – Type 2: two feet of clean fill/soil underlain by a demarcation barrier (orange snow fence), underlain by compacted subgrade.
9. Courtyard: permeable pavers underlain by 2 inches of virgin gravel underlain by two feet of clean fill/soil underlain by a demarcation barrier (orange snow fence) underlain by compacted subgrade.

The compacted subgrade underneath the composite cover system constitutes the RMZ, which includes all soil/fill that requires adherence to special conditions during any post-remedial disturbance, excavation, or handling as part of on-site activities. The elevation of the RMZ is provided in Appendix B of the FER. Subgrade utilities for the building, SSDS piping and GPA are also located within the RMZ. The vapor barrier, geotextile fabric, and orange construction snow fence act as demarcation barriers, which separate the composite cover system from the RMZ. The two-foot thick, clean fill buffer consists of imported fill that complies with the lower of the protection of groundwater or the protection of public health soil cleanup objectives (SCOs) for restricted residential use, as outlined in 6 NYCRR Part 375-6.7(d) and table 375-6.8(b), in accordance with the requirements stated in Section 5.4.9 of the NYSDEC-approved RAWP.

4.2.2 Sub-Slab Depressurization System (SSDS)

A passive SSDS was installed to mitigate the potential for soil vapor intrusion into the new building. The sub-slab components of the SSDS were installed between November 2015 and March 2016, as documented in the FER. The aboveground components were installed between January 2018 and June 2018, as documented in the September 2018 PRR. As determined by NYSDEC and NYSDOH in April 2019, the SSDS continues to operate in a passive state. The components of the SSDS include:

- One 0.02-inch slotted, 4-inch diameter Schedule 40 polyvinyl chloride (PVC) pipe section (VR-1A) in the northeastern portion of the Site beneath the partial cellar;
- Three 0.02-inch slotted, 4-inch diameter Schedule 40 PVC pipe sections in the southern and southeastern portions of the Site (VR-1B, VR-1C, and VR-1D);

- One galvanized steel header in the partial cellar, which manifolds the four 4-inch diameter galvanized steel aboveground pipes into one 6-inch diameter galvanized steel riser pipe (VR-1) that extends to the roof;
- A 10-foot, 10-inch diameter pipe extension above the rooftop fitted with a rain cap;
- Communication and pipe sleeves through concrete foundation elements;
- Two sub-slab condensate drains; and
- Five vacuum monitoring points (MP-1 through MP-5).

The SSDS "as-built" drawings are provided as Appendix B.

5.0 REMEDY PERFORMANCE EVALUATION AND MAINTENANCE

The SMP describes the measures for evaluating the performance and effectiveness of the ICs and ECs. The annual Site-wide, composite cover system, and SSDS inspection were conducted in accordance with the SMP. Due to medical visits being conducted in the Essen Medical Center at the time of AKRF's inspection, portions of the commercial space were not able to be inspected.

5.1 Site-Wide Inspection

The site-wide inspection was conducted on April 11, 2023 to ensure that all aspects of the remedy were in-place and effective. Based on the inspection results, all ICs and ECs remain in compliance with the SMP and remain effective and protective of human health and the environment. The Site-Wide Inspection Log is included in Appendix C.

5.2 Composite Cover System Inspection and Maintenance

The composite cover system inspection was conducted concurrently with the Site-wide inspection on April 11, 2023. The composite cover system inspection consisted of checking all surficial components of the Site cover system, including the landscaped areas and concrete slabs, for holes, cracking and/or other signs of damage. During the inspection, all observed Site cover system components were found to be intact, with no signs of significant cracking or damage. Minor surficial cracking was observed in the concrete slab in some mechanical spaces and building staff indicated repairs would be made. The Composite Cover System Inspection Logs and the Photographic Log documenting the inspection are included in Appendix D.

5.3 Sub-Slab Depressurization System (SSDS) Inspection

As the SSDS operates as a passive system; monitoring of quantitative operational parameters was not required. The accessible components of the SSDS were inspected visually on March 29, 2022 during the annual Site-wide and composite cover system inspections, and is documented in the Composite Cover System Inspection Log, included in Appendix D. The above-grade components of the SSDS and the accessible vapor monitoring points (VMPs) appeared to be in good condition with no visible signs of damage and/or breaches that would constitute a short circuit of the vapor pathway. No issues were identified during the April 16, 2022 through April 16, 2023 reporting period. Visual inspection of the SSDS will continue to be conducted as part of the Site-wide and composite cover system inspections.

6.0 CONCLUSIONS AND RECOMMENDATIONS

The purpose of this PRR is to document the Site management activities and findings associated with the ICs and ECs, and to certify that the controls are being implemented in accordance with the NYSDEC-approved SMP 12-month periodic review reporting period from April 16, 2022 to April 16, 2023. The IC/EC Certification Form is provided in Appendix E.

Based on the inspections and data summarized in this report, the following conclusions were developed:

- The IC/EC Certification Form for the Site was completed based on results from Site monitoring and inspections described in this report. The monitoring and inspection findings indicate that all ICs/ECs at the Site remain in place and effective.
- The engineered composite cover system and SSDS components are in good condition.

In summary, the remedy remains effective and protective of human health and the environment and remains in compliance with the requirements set forth in the SMP. The SSDS continues to operate in a passive state. Periodic inspections, including annual site-wide composite cover system and SSDS inspections will continue to be performed in accordance with the SMP.

FIGURES

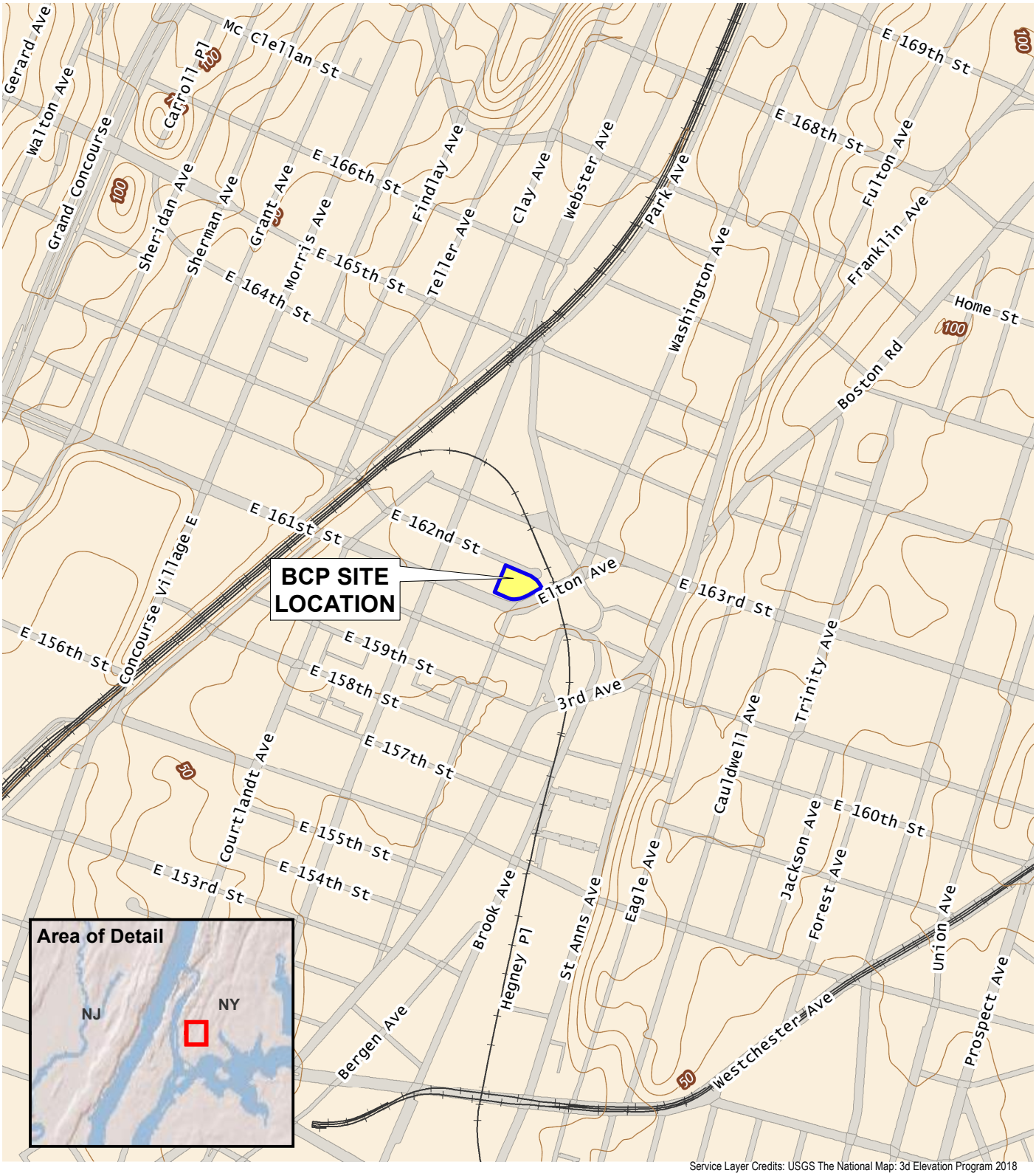

Service Layer Credits: USGS The National Map: 3d Elevation Program 2018

0 800 1,600

SCALE IN FEET

AKRF

440 Park Avenue South, New York, NY 10016

Elton Crossing (Melrose C Family)
432 East 162nd Street (899 Elton Avenue)
Bronx, New York

SITE LOCATION

DATE	4/1/2021
PROJECT NO.	11901
FIGURE	1

©2019 AKRF M:\AKRF Project Files\11901 Melrose Commons Site C - Family\GIS\11901 Fig 1 BCP site loc map.mxd4/1/2019 3:46:44 PM iszalus

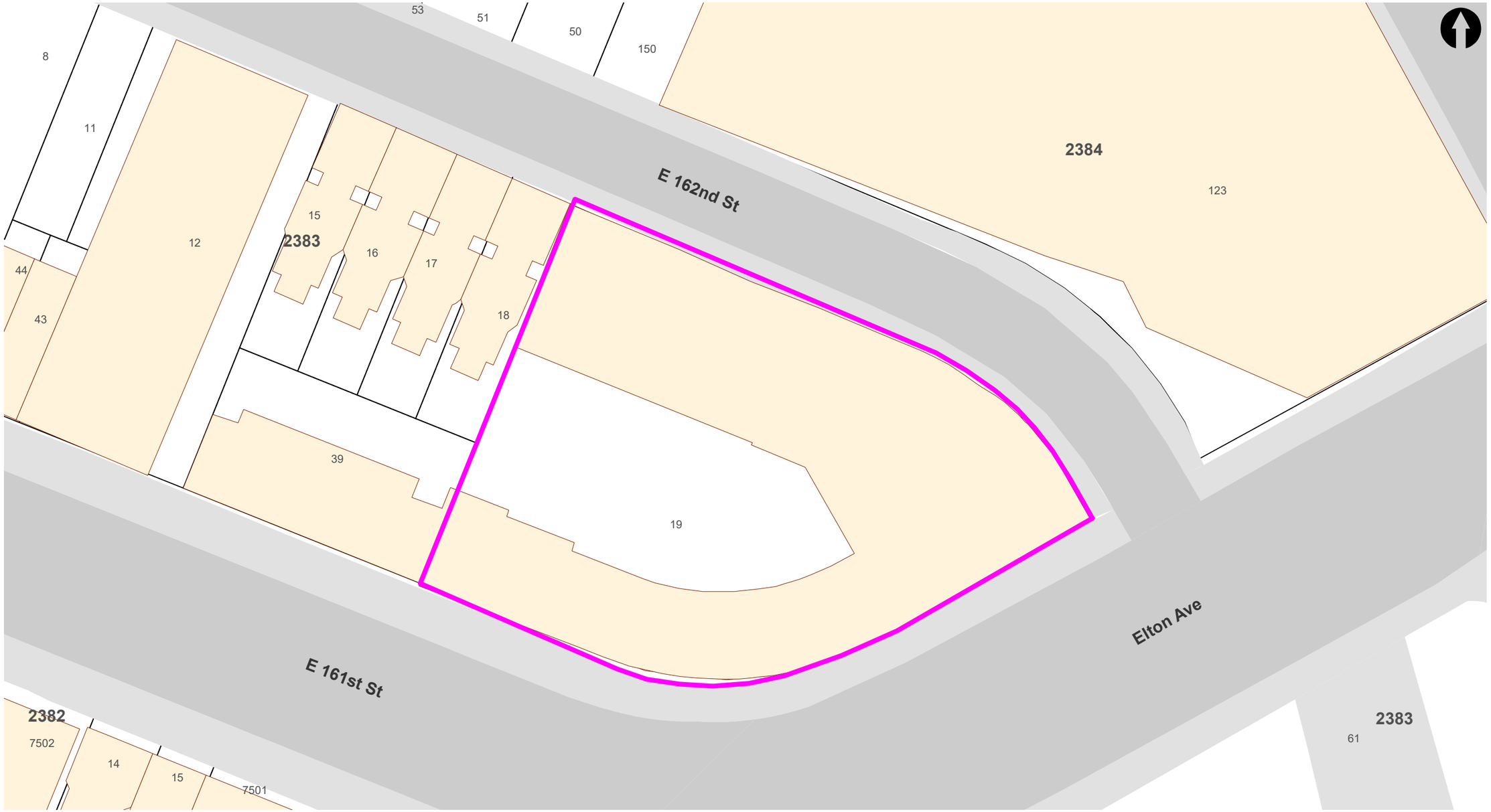

Map Source:
NYCDCP (NYC Dept. of City Planning) GIS database

LEGEND

- BCP SITE BOUNDARY
- BUILDING
- 19 LOT BOUNDARY AND TAX LOT NUMBER
- **2383** BLOCK NUMBER

0 20 40 80
SCALE IN FEET

AKRF
440 Park Avenue South, New York, NY 10016

Elton Corssing (Melrose C Family)
432 East 162nd Street (899 Elton Avenue)
Bronx, New York

SITE PLAN

DATE
4/2/2021

PROJECT NO.
11901

FIGURE
2

©2019 AKRF W:\Projects\11901 - MELROSE SITE C FAMILY ELTONCROSSING\Technical\GIS and Graphics\Hazmat\11901 Fig 2 Site Plan PRR.mxd4/2/2019 9:02:20 AM iszalus

AKRF
440 Park Avenue South, New York, NY 10016

Elton Crossing (Melrose C Family)
432 East 162nd Street (899 Elton Avenue)
Bronx, New York

COMPOSITE COVER SYSTEM PLAN

DATE	4/2/2021
PROJECT NO.	11901
FIGURE	3

©2019 AKRF, Inc M:\AKRF Project Files\11901 Melrose Commons Site C - Family\Figures\PRRs\11901 Fig 3 Site Cover System.dwg last save: jszalus 4/2/2019 12:09 AM

APPENDIX A
ESSEN MEDICAL CENTER PLUMBING DETAILS AND DRAWINGS

PLUMBING LEGEND

SYMBOLS

SYMBOLS	DESCRIPTION
	GATE VALVE OR BALL VALVE, SEE SPECIFICATIONS
	GAS COCK
	GAS LUBRICATED PLUG VALVE
CW	COLD WATER PIPING
HW	HOT WATER PIPING
HWR	HOT WATER RECIRCULATION PIPING
S/W	SANITARY OR WASTE PIPE ABOVE FLOOR
S/W	SANITARY OR WASTE PIPE BELOW FLOOR
ST	STORM WATER PIPING
V	VENT PIPING
G	GAS PIPING
	SEDIMENT POCKET
	PIPE UP
	PIPE DROP/DOWN
	CAPPED PIPING
HEDV	HOSE END DRAIN VALVE WITH CAP AND CHAIN
WTS	WATER TIGHT SLEEVE
	UNION
HB	HOSE BIBB
SA	SHOCK ABSORBER (ARRESTOR)
PG	PRESSURE GAUGE
	THERMOMETER
WH ,WHNF	WALL HYDRANT NOT FREEZE
	CHECK VALVE
SJ	SPRING LOADED SILENT CHECK VALVE
NCTE	NEW CONNECTION TO EXIST

ABBREVIATIONS

SYMBOLS	DESCRIPTION
A.DR	AREA DRAIN
AC	AIR CONDITIONING UNIT
C.LAV	COUNTER LAVATORY
CO	CLEAN OUT
CODP	CLEAN OUT DECK PLATE
DWV	DRAINAGE, WASTE, VENT
EWC	ELECTRIC WATER COOLER
FAI	FRESH AIR INTAKE
FD, FL.DR.	FLOOR DRAIN
FE	FIRE EXTINGUISHER
FM.FT.	FLOOR MOUNTED FLUSH TANK
HDCP	HANDICAPPED
KS	KITCHEN SINK
LAV	LAVATORY
MS	MOP SINK
PS	PANTRY SINK
RF	ROOF
RD. RF.DR.	ROOF DRAIN
SH	SHOWER
SK	SINK
SS	SERVICE SINK
ST	STORM WATER
UG	UNDERGROUND
UF	UNDER FLOOR
UR	URINAL
VTR	VENT THROUGH ROOF
WC	WATER CLOSET
W.CO	WALL CLEANOUT
	SLEEVE
C.SK	COUNTER SINK
N/A	NOT APPLICABLE
T&S	TUB AND SHOWER
AV	AIR VENT

PLUMBING NYC BUILDING DEPARTMENT NOTES

1. ALL WORK WILL CONFORM TO THE N.Y.C. PLUMBING CODE 2014 EDITION.
2. ALL PIPING PASSING THROUGH OR UNDER WALLS OR FOOTINGS SHALL BE PROTECTED FROM BREAKAGE AND CORROSION – CHAPTER 3, PC 305.5.
3. TRENCHING, EXCAVATION AND BACKFILLING – CHAPTER 3, PC 300.
4. ALL SLEEVES SHALL BE AS PER CHAPTER 3, PC 305.
5. RODENTPROOFING SHALL BE AS PER CHAPTER 3, PC 304 AND APPENDIX F.
6. TOILET FACILITIES FOR WORKMAN SHALL BE AS PER CHAPTER 3, PC 311.
7. MATERIALS FOR PLUMBING SHALL CONFORM TO TABLES 702.1, 702.2, 702.3 AND 702.4. SHALL BE IDENTIFIED AS PER PC 702.
8. PIPING SYSTEMS MATERIALS SHALL BE PER PC 702.
9. MINIMUM NUMBER OF PLUMBING FIXTURES WILL COMPLY WITH PC 403 TABLE 403.1.
10. FLUSHING DEVICES FOR WATER CLOSETS SHALL BE AS PER PC425.1 THROUGH PC 425.3.2.
11. SIZE OF WASTE OUTLETS FOR PLUMBING FIXTURES:

WATER CLOSET	AS PER	SECTION PC 420
LAVATORY	AS PER	SECTION PC 416
BATHTUB	AS PER	SECTION PC 407
SINK	AS PER	SECTION PC 418
DISHWASHER	AS PER	SECTION PC 409
AUTOMATIC CLOTHES WASHER	AS PER	SECTION PC 406
LAUNDRY TRAY	AS PER	SECTION PC 415
FLOOR DRAIN	AS PER	SECTION PC 412

12. TRAP AND CLEANOUTS WILL BE PROVIDED AS PER CHAPTER 10 & PC 708.
13. BUILDING HOUSE TRAP SHALL BE PROVIDED AS PER CHAPTER 7 & PC 703.6.
14. DRAINAGE PIPE CLEANOUTS SHALL BE AS PER PC 708.
15. HANGERS AND PIPING SUPPORTS SHALL BE PROVIDED AS PER CHAPTER 3, PC 308.
16. WATER SUPPLY AND DISTRIBUTION SHALL BE AS PER CHAPTER 6.
17. WATER SUPPLY DISTRIBUTION SYSTEM SHALL BE AS PER CHAPTER 6, PC 604 WITH MINIMUM RATE OF FLOW AND PRESSURE AS PER TABLE 604.3 AND 604.4.
18. HOUSE AND BOOSTER PUMPS SHALL BE AS PER CHAPTER 6.
19. WATER SUPPLY WILL BE PROTECTED AGAINST BACKFLOW AND BACKSIPHONAGE AS PER CHAPTER 6.
20. SANITARY DRAINAGE PIPING WILL CONFORM TO PC 701.
21. SIZING OF THE SANITARY DRAINAGE PIPING SHALL BE AS PER CHAPTER 7, PC 710.
22. VENT PIPING SHALL CONFORM TO CHAPTER 9.
23. STORM DRAINAGE PIPING SHALL BE AS PER CHAPTER 11.
24. ALL GAS PIPING SHALL BE AS PER CHAPTER 4 OF THE NEW YORK CITY FUEL GAS CODE 2014.
25. PROVIDE STERILIZATION OF DOMESTIC WATER AS PER CHAPTER 6, PC 610.

THESE PLANS ARE APPROVED ONLY FOR THE WORK INDICATED ON THE APPLICATION SPECIFICATION SHEET ALL OTHER MATTERS SHOWN ARE NOT TO BE RELIED UPON OR TO BE CONSIDERED AS EITHER BEING APPROVED OR IN ACCORDANCE WITH APPLICABLE CODES.

SCHEDULE OF FLOOR, FUNNEL DRAINS

J.R. SMITH	GRATE		SOIL/WASTE			REMARKS
	DIMENSIONS SHOWN ARE NOMINAL				TRAFFIC	
FIGURE NO	FREE AREA SIZE SHAPE	MATERIAL	TAG			
2010 'A'	18 SQ. IN. 6"ø ROUND	NB	FD 'A'	LIGHT		LOCATED IN TOILETS ROOMS, SHOWERS & FINISHED AREAS EXCEPT KITCHEN. WITH TRAP PRIMER
2233-M	39 SQ. IN. 12"ø ROUND	D.I.	FD 'B'	HEAVY		LOCATED IN MECHANICAL EQUIPMENT ROOMS AND BOILER ROOMS
2360.NB. ARC (I&O)	33 SQ. IN. 12"ø ROUND	NB	FD 'C'	MEDIUM		LOCATED IN KITCHEN WHERE TRAFFIC IS FREQUENT
2360.NB.14 .25ARC (I&O)	33 SQ. IN. 12"ø ROUND	NB	FD 'D'	MEDIUM		LOCATED IN KITCHEN NEAR EQUIPMENT. WITH FUNNEL
3161-10	42 SQ. IN. 12S"x12S" SQUARE	NB RIM LESS GRATE	FS 'E'	MEDIUM		LOCATED IN KITCHENS UNDER & NEAR EQUIPMENT

FIXTURE CONNECTION SCHEDULE

FIXTURE	TAG	PIPING SIZES IN INCHES								REMARKS
		S	W	IW	V	HW	140°F HW	CW	G	
WATER CLOSET	WC	4"	–	–	2"	–	–	1"	–	FLOOR MOUNTED FLUSH VALVE
LAVATORY	LAV	–	1–1/2"	–	1–1/2"	1/2"	–	1/2"	–	
SHOWER	SH	–	2"	–	1–1/2"	1/2"	–	1/2"	–	
KITCHEN SINK	KS	–	3"	–	1–1/2"	1/2"	–	1/2"	–	
URINAL	UR	–	2"	––	1–1/2"	–	–	3/4"	–	
SERVICE SINK	SS	–	3"	–	1–1/2"	3/4"	–	3/4"	–	
SINK	SK	–	2"	–	1–1/2"	1/2"	–	1/2"	–	
ELECTRIC WATER COOLER	EWC	–	1–1/2"	–	1–1/2"	–	–	1/2"	–	
MOP SINK	MS	–	3"	–	1–1/2"	3/4"	–	3/4"	–	
HANDICAP WATER CLOSET	HDCP WC	4"	–	–	2"	–	–	3/4"	–	FLOOR MOUNTED FLUSH VALVE
RANGE	R	–	–	–	–	–	–	–	2"	
OVEN	–	–	–	–	–	–	–	–	1 1/4"	
CLOTHES WASHER	CLW	–	2"	–	1 1/2"	3/4"	–	3/4"	–	W/ VACCUUM BREAKERS, FLEX PIPE
CLOTHES DRYER	CLD	–	–	–	–	–	–	–	3/4"	W/ FLEX PIPE
COUNTER LAVATORY	C.LAV	–	–	–	–	–	–	1/2"	–	
LAUNDRY SINK	LS	–	2"	–	1–1/2"	3/4"	–	3/4"	–	
HANDICAP WATER LAVATORY	HDCP LAV	–	2"	–	1–1/2"	1/2"	–	1/2"	–	
HANDICAP SHOWER	HDCP SH	–	2"	–	1–1/2"	1/2"	–	1/2"	–	
DISHWASHER	DW	–	–	1 1/4"	–	–	1"	–	–	SPILL TO FS WITHIN 16x16x3 STAINLESS STEEL WATERTIGHT DRAIN PAN
PRE–RINSE SINK	–	–	–	–	–	–	3/4"	3/4"	–	SPILL TO FLOOR SINK
TROUGH SINK	TS	–	2"	–	1–1/2"	1/2"	–	1/2"	–	FOR EACH STATION
ICE MAKER	–	–	–	2 @ 3/4"	–	–	–	3/4"	–	SPILL TO FLOOR SINK
3 COMPARTMENT SINK	–	–	3 @ 1 1/2"	2"	–	–	3/4"	3/4"	–	SPILL TO FS WITHIN 16x16x3 STAINLESS STEEL WATERTIGHT DRAIN PAN
FRYER		–	–	–	–	–	–		1"	
BROILER		–	–	–	–	–	–		3/4"	
HAND SINK		–	1 1/2"	–	1 1/2"	1/2"	–	1/2"	–	

NOTES:
1. SEE FLOOR PLANS, RISER DIAGRAMS & EQUIPMENT SCHEDULE FOR ADDITIONAL DATA.
2. REDUCE PIPE TO FIXTURE/EQUIPMENT CONNECTION SIZE WITHIN 18 INCHES OF SAID CONNECTION.
3. SELECTED WATER CLOSETS ARE SQUAT TYPE WITH REMOTE WALL TYPE FLUSH VALVES (SEE ARCHITECTURAL PLANS).

GENERAL NOTES PERTAINING TO PLUMBING DRAWINGS

1. SCOPE OF WORK:

A) CONTRACTOR SHALL CONTACT WATER COMPANY. VERIFY WATER SERVICE WITH WATER PROVIDER. CONTRACTOR SHALL PAY ALL FEES, FILE, OBTAIN NEW METER, WATER CURB VALVE & BOX, WATER SERVICE, OBTAIN ALL APPROVALS, ETC.

B) CONTRACTOR SHALL INSULATE ANY DRAINAGE PIPING (SANITARY STORM, VENT, WASTE PIPING) WITHIN PLENUM CEILING SPACES SUBJECT TO SWEATING.

C) CONTRACTOR SHALL PROVIDE SHUTOFF VALVES FOR ALL FIXTURES & BRANCH MAINS.

D) PROVIDE EXCAVATION, BACKFILL, HANGERS, INSULATIONS, TESTS, STERILIZATIONS, PIPE, VALVES, FITTINGS, SPECIALTIES, ETC., AS REQUIRED FOR A COMPLETE INSTALLATION.

E) FURNISH AND INSTALL ALL FIXTURES. INSTALLATION SHALL INCLUDE BUT NOT BE LIMITED TO ACCEPTANCE AT JOB SITE, STORAGE, PROTECTION, PIPING, ROUGH–ING, HANGERS, INSULATION, ETC.

F) PROVIDE A COMPLETE DOMESTIC COLD WATER SYSTEM INCLUDING WATER SERVICE FROM STREET CONNECTION AT DOMESTIC COLD WATER OUTLET WATER METER, BACKFLOW PREVENTORS, DUPLEX WATER BOOSTER SYSTEM, AIR VENTS PIPING, INSULATION HANGERS, SLEEVES, ROUTE WATER MAIN AND CONNECT TO RISER THROUGH BUILDING & SERVE ALL FIXTURES AND EQUIPMENT. PROVIDE FOR HVAC CONTRACTOR COLD WATER MAKE–UP WITH BACKFLOW PREVENTOR.

G) PROVIDE DUPLEX SEWER EJECTOR IN CELLAR FOR FLOOR DRAIN IN CELLAR.

H) ENGAGE A NYC APPROVED UTILITY SUB–CONTRACTOR TO PROVIDE 6" FIRE PROTECTION SERVICE FROM SPRINGFIELD BLVD.

I) SEE DRAWINGS FOR ADDITIONAL WORK.

J) THE SCOPE OF WORK SHALL INCLUDE BUT NOT BE LIMITED TO THE MENTIONED MAJOR WORK ITEMS.

K) DISCONNECT AND REMOVE ANY REMAINING EXISTING DRAINAGE, WATER AND GAS SYSTEMS INCLUDING BUT NOT LIMITED TO FIXTURES, SERVICE CONNECTIONS, PIPING, WITHIN EXISTING SITE/BUILDING. TERMINATE EXISTING WATER AND DRAINAGE SERVICES AS PER D.E.P. AND NYC D.O.B. AND GAS UTILITY.

L) CONTRACTOR SHALL CONTACT GAS COMPANY. VERIFY GAS SERVICE WITH GAS PROVIDER CONTRACTOR SHALL FILE, PAY ALL FEES, OBTAIN NEW METER, GAS CURB VALVE AND BOX, GAS SERVICE, OBTAIN ALL APPROVALS, ETC.

M) CONTRACTOR SHALL CONTACT WATER COMPANY. VERIFY EXISTING WATER SERVICE WITH WATER PROVIDER. CONTRACTOR SHALL PAY ALL FEES, FILE, OBTAIN NEW METER, WATER CURB VALVE & BOX, WATER SERVICE, OBTAIN ALL APPROVALS, ETC.

N) PROVIDE COMPLETE GAS SYSTEM INCLUDING CONNECTION TO GAS MAIN AT CELLAR. ROUTE NEW GAS MAIN THROUGH BUILDING TO BOILERS, OVEN, FRYERS, RANGES. SUPPORT PIPING WITHIN BUILDING TO BUILDING STRUCTURAL BEAMS.

O) PROVIDE FLOOR MOUNTED WATER CLOSETS, TROUGH SINKS, SHOWERS, MOP SINKS, SERVICE SINKS, KITCHEN SINKS, LAVATORIES, SINKS REQUIRED TRIM, ACCESSORIES, PIPING.

P) CONNECT TO DOMESTIC HOT WATER HEATERS/STORAGE PROVIDED BY CONTRACTOR. PROVIDE A COMPLETE DOMESTIC HOT WATER SYSTEM COMPLETE WITH TEMPERATURE MIXING VALVE, EXPANSION TANKS, AIR VENTS, VACUUM BREAKER, HOT WATER RECIRCULATORS AND CONTROL, PIPING, INSULATION, HANGERS, SLEEVES, ETC. CONNECTIONS AT DOMESTIC HOT WATER HEATERS. HOT WATER PIPING SHALL ROUTE AND SERVE ALL FIXTURES AND EQUIPMENT REQUIRING SAME.

Q) FURNISH AND INSTALL ALL FIXTURES. INSTALLATION SHALL INCLUDE BUT NOT BE LIMITED TO ACCEPTANCE AT JOB SITE, STORAGE, PROTECTION, PIPING, ROUGHING, HANGERS, INSULATION, ETC.

R) PROVIDE COMPLETE DRAINAGE SYSTEMS INCLUDING BUT NOT LIMITED TO THE FOLLOWING:

1) SOIL WASTE AND VENT PIPING CONNECTIONS TO ALL FIXTURES & EQUIPMENT REQUIRING SAME. ROUTE AND CONNECT SANITARY DRAINAGE TO STORM DRAINAGE AND ROUTE COMBING DRAINAGE TO EXISTING STREET MAIN. ROUTE AND CONNECT VENT PIPING TO VENTS MAIN THROUGH ROOF.

2) STORM LEADERS CONNECT TO ROOF DRAINS. ROUTE DOWN BUILDING AND CONNECT TO STORM OUTLETS, CONTROLLER FLOW DRAINS, DETENTION DRAINS, ETC. ROUTE & CONNECT 6" STORM TO SANITARY.

3) CONTRACTOR SHALL CONTACT D.E.P. TO VERIFY EXISTING DRAINAGE SERVICE. CONTRACTOR SHALL PAY ALL FEES & PROVIDE COMBINED DRAINAGE SERVICE AND OBTAIN ALL APPROVALS, ETC.

S) PROVIDE COLD WATER FOR ICE MAKER INCLUDING PIPING, INSULATION, INLINE FILTER, ETC.

T) ENGAGE A NYC APPROVED UTILITY SUB–CONTRACTOR TO PROVIDE 6" COMBINED WATER SERVICE FROM SPRINGFIELD BLVD. WATER MAIN AND A 6" COMBINED HOUSE SEWER TO SPRINGFIELD BLVD. SEWER.

U) PROVIDE OIL MINDER ELEVATOR SUMP PUMP, DUPLEX SUMP PUMPSET FOR CELLAR AND DUPLEX SEWAGE EJECTOR PUMPSET FOR CELLAR DRAINAGE.

2. PIPING MATERIALS SHALL BE AS SPECIFIED, BUT SHALL MATCH CURRENT INDUSTRY PRACTICE AND CURRENT CODES.

3. ALL SOLDER FOR WATER PIPING SHALL BE LEAD FREE.

4. ALL WATER AND GAS PIPING SHALL PITCH 1 INCH IN 40 FEET.

5. ALL DRAINAGE PIPING SHALL PITCH 1 INCH IN 8 FEET UNLESS 3" PIPE SIZE & LARGER AND 1 INCH IN 4 FEET FOR PIPING UP TO 3" OTHERWISE NOTED OR AS PER CODE. ALL EXTERIOR DRAINAGE PIPING SHALL PITCH 1 INCH WITHIN 4 FEET.

6. ALL WATER PIPING SHALL BE INSULATED. INSULATION SHALL BE 1 INCH FIBERGLASS PIPE INSULATION WITH ALL SERVICE JACKET SELF STICK. UP TO 1½ INCH PIPING AND 1–1/2 INCH FOR PIPING 1½ INCH AND LARGER. UTILIZE ZESTON FORM FITTED PVC COVERED WITH LOOSE FIBREGLASS INSULATION FOR VALVES AND FITTINGS.

7. ALL EQUIPMENT AND FIXTURES SHALL HAVE SHUTOFF VALVES FOR THEIR RESPECTIVE GAS OR WATER SERVICE AT SAID ITEMS.

8. IN GENERAL WATER AND DRAINAGE PIPING SHALL CONNECT TO EXISTING OUTLETS EXACT SIZE AND LOCATION OF SAID OUTLETS SHALL BE FIELD VERIFIED BY CONTRACTOR PRIOR TO HIS BID WITH ALL COSTS INCLUDED IN HIS BID.

ALL PIPING SHALL BE SUPPORTED FROM STRUCTURE. ALL WATER PIPE HANGERS SHALL BE CLEVIS TYPE OR TRAPEZE WITH PVC COATED CHANNEL WITH 3/8" DIA., HANGERS, AND INSULATED PIPE SHIELDS WATER PIPING. 5'–0" ON CENTERS FOR PIPING UP TO 1–1/4" PIPE SIZE, 7'–0" ON CENTER FOR PIPING 1–1/4" THRU 2" AND 10'–0" ON CENTER FOR PIPING 2–1/2" AND LARGER.

ALL SANITARY, WASTE, STORM, VENT PIPE HANGERS SHALL BE CLEVIS TYPE OR TRAPEZE WITH PVC COATED CHANNEL WITH 3/8" DIA., MIN. HANGER (1/2" DIA. 4–6 INCH AND 3/4" 8–INCH AND LARGER) 5'–0" ON CENTERS AND AT EACH JOINT AND CHANGE IN DIRECTION. PIPE SIZES 8" AND LARGER SHALL HAVE ROLLER TYPE HANGERS OR TRAPEZE WITH ROLLERS. (ROLLER TYPE HANGERS SHALL BE DOUBLE ROD TYPE.) PROVIDE INSULATED PIPE SHIELDS FOR SANITARY, STORM, WASTE PIPING.

9. ANY ITEM REMOVED SHALL BECOME THE PROPERTY OF THE CONTRACTOR UNLESS OTHERWISE NOTED. CONTRACTOR SHALL TRANSPORT ALL REMOVALS FROM SITE AND DISPOSE OF SAME AS REQUIRED BY ALL PARTIES HAVING JURISDICTION.

10. ALL PIPING PENETRATIONS THROUGH FLOORS, WALLS, PARTITIONS AND ROOFS SHALL HAVE PIPE SLEEVES. ALL PIPING PENETRATIONS THROUGH EXTERIOR WALLS, ROOFS, CELLAR FLOOR SHALL HAVE WATERTIGHT SLEEVES.

11. PIPING MATERIALS:

A) WASTE AND VENT PIPING UP TO 2" GALVANIZED STEEL SCHEDULE 40 WITH DWV SCREWED GALVANIZED FITTINGS OR COPPER TYPE "K" DWV WITH SOLDERED DWV FITTINGS. WASTE AND VENT PIPING 2" AND LARGER SHALL BE SIMILAR TO SANITARY DRAINAGE PIPING.

B) WASTE DRAINAGE–THREADED RED BRASS PIPE WITH THREADED BRASS OR BRONZE FITTINGS.

C) SANITARY AND STORM DRAINAGE PIPING UNDER CELLAR FLOOR AND UNDERGROUND – CHARLOTTE OR AB&I COATED HUB SPIGOT EXTRA HEAVY CAST IRON WITH NEOPRENE CAULKED.

D) SANITARY AND STORM DRAINAGE PIPING EXCEPT UNDER FLOOR – CHARLOTTE OR AB&I NO HUB SERVICE WEIGHT CAST IRON WITH DRAINAGE CAST IRON FITTINGS CLAMPALL 4000 HEAVY DUTY STAINLESS STEEL MECHANICAL COUPLING WITH NEOPRENE GASKET TORQUED AS REQUIRED UP TO 8" PIPING. 8" AND LARGER SHALL BE EXTRA HEAVY WROUGHT CHARLOTTE OR AB&I HUB AND SPIGOT LEAD & OAKUM CAULKED.

E) SEWAGE EJECTOR DISCHARGE – SCHEDULE 40 GALVANIZED STEEL WITH GROOVED MECHANICAL FITTINGS. (SUMP PUMP DISCHARGE SIMILAR).

F) FLEXIBLE PIPE SHALL BE BRASSCRAFT, FLEXONICS, DORMONT, WARD OR KEFLEX PVC COATED FLEXIBLE STAINLESS STEEL OR BRASS PIPING WITH BRASS FITTINGS, NYC APPROVED AS INDICATED.

G) GAS PIPING UP TO 4 INCH SHALL BE SCHEDULE 40 BLACK STEEL A53 WITH THREADED CAST IRON FITTINGS. GAS PIPING 4 INCH OR LARGER SHALL BE SCHEDULE 40 A53 WITH WELDED STEEL FITTINGS. PIPING UNDERGROUND AND EXTERIOR OF BUILDING SHALL BE MILL WRAPPED.

12. CONTRACTOR SHALL PROVIDE SUPPLEMENTARY CHANNEL ANGLES, STEEL BEAMS, ETC. FOR SUPPORT OF PIPING AND CONDUITS AND REQUIRED.

13. DEFINITIONS:

OWNER = NY MASJID
PROVIDE = FURNISH AND INSTALL
CONTRACTORS = LICENSED PLUMBING CONTRACTOR
PIPING = PIPE, VALVES AND FITTINGS.

14. ALL PLUMBING WORK SHALL BE FURNISHED AND INSTALLED IN CONFORMANCE TO NYC BUILDING CODES, NYC PLUMBING CODE, NFPA, NYC AND NYS ENERGY CODE, ASHRAE AND ASPE, NSF.

15. CONTRACTOR SHALL PREPARE AND FILE ALL DOCUMENTS, PAY ALL FEES, TEST ALL PIPING, OBTAIN ALL APPROVALS AND SIGN–OFFS AS REQUIRED BY APPLICABLE CODES.

16. STERILIZATION OF DOMESTIC WATER SYSTEM:

BEFORE BEING PLACED IN SERVICE, ALL WATER LINES SHALL BE DISINFECTED IN ACCORDANCE WITH AWWA SPECIFICATIONS NO. C–507, NEW YORK CITY AND NEW YORK STATE PLUMBING CODES, NEW YORK CITY RULES AND REGULATIONS AND LOCAL WATER UTILITY RULES AND REGULATIONS.

17. CONTRACTOR SHALL TEST ALL WATER AND DRAINAGE PIPING FOR A TWO (2) HOUR PERIOD AND OBTAIN ALL APPROVALS AND SIGN–OFFS AND SELF CERTIFY INSTALLATION.

18. ALL PIPES, CONDUIT, PENETRATIONS OF WALLS, FLOOR, ROOF AND CEILING SHALL BE FIRESTOPPED.

19. ALL VENT SHALL BE MAID OF MIST, MODEL 75, BELL AND GOSSETT MODEL 90.

20. ACCESS DOORS SHALL BE MILCOR OR KARP.

21. SERVICES:

A) ALL STORM AND SANITARY PIPING SHALL BE EXTRA HEAVY CAST IRON WITH HUB AND SPIGOT CAULKED JOINTS LEAD AND OAKUM.

B) ALL WATER PIPING SHALL BE TYPE K COPPER ON RED BRASS UP TO AND INCLUDING 2 INCHES AND COATED DUCTILE IRON CEMENT LINED WITH MECHANICAL JOINTS 3 INCHES AND LARGER.

22. TRAPS, SUPPLIES WITH STOPS DRAINS, NIPPLES AND WALL ESCUTCHEONS SHALL BE BRASS KRAFT, MCGUIRE OR WATTS.

23. WATER HAMMER ARRESTORS, FIELD FABRICATED AIR CHAMBERS OR MANUFACTURED TYPE WHERE INDICATED SHALL BE PROVIDED FOR PIPING AND AS INDICATED.

24. ALL PIPING AND TRIM EXPOSED TO VIEW OR WITHIN CABINETRY, SHALL BE CHROMEPLATED AND HAVE ESCUTCHEONS AT ALL WALL OR PARTITION PENETRATIONS.

25. CONTRACTOR SHALL PROVIDE A ONE (1), YEAR GUARANTEE FOR WORK IN HIS CONTRACT. CONTRACTOR SHALL PROVIDE PARTS AND LABOR WITHIN THE GUARANTEE PERIOD COST FREE TO THE OWNER.

26. CONTRACTOR SHALL BE RESPONSIBLE FOR DAILY REMOVAL OF ALL ITEMS BEING REMOVED AND ALL SHIPPING CONTAINERS, CARTONS, DEBRIS, ETC. GENERATED BY HIS FORCES IN THE COURSE OF ACCOMPLISHING REQUIRED TASKS.

27. CONTRACTOR SHALL PROVIDE ANY APPLIANCES, WORK PROCESS, SCAFFOLDING, TOOL, EQUIPMENT, ETC. REQUIRED TO MAKE WORK SCOPE 100% COMPLETE & FULLY OPERATIONAL.

28. ALL CUTTING AND ROUGH PATCHING BY THIS CONTRACTOR FOR HIS OWN WORK.

29. CONTRACTOR SHALL SUBMIT CERTIFIED COORDINATED SHOP DRAWINGS FOR ALL EQUIPMENT, PIPING, CONDUITS, HANGERS, AND SUPPORTS, FIXTURES, ETC. FOR APPROVAL PRIOR TO PURCHASE OR INSTALLATION. PIPING SHOP DRAWINGS SHALL BE 3/8"=1'–0" SCALE.

30. CONTRACTOR SHALL PROTECT HIS WORK AND EQUIPMENT FROM DAMAGE, PROJECT VANDALISM, ETC. ANY ITEM THAT IS DAMAGED, VANDALIZED OR STOLEN PRIOR TO ACCEPTANCE OF PROJECT BY OWNER AND ARCHITECT SHALL BE REPLACED BY CONTRACTOR AT NO CHARGE TO OWNER.

31. CONTRACTOR SHALL COMPLY TO THE GENERAL CONDITIONS OF AIA DOCUMENTS A201.

32. PROVIDE ACCESS DOORS FOR ALL CONCEALED VALVES, VENTS, DAMPER, EXPANSION JOINTS, PULLBOXES, SHOCK ABSORBERS, TRAP PRIMERS, DRAINS, MOTORS, PUMPS AND ANY OTHER ITEM REQUIRING SERVICE.

33. ALL HOLES THROUGH FLOORS, PARTITIONS AND WALLS SHALL BE SAW–CUT OR CORE DRILLED AND REINFORCED BY RESPECTIVE CONTRACTOR. CONTRACTOR SHALL VERIFY, PRIOR TO CUTTING, WITH ENGINEER. ANY HOLES THRU ROOF, CELLAR, EXTERIOR WALL SHALL HAVE WATERTIGHT SLEEVE.

34. NO WORK SHALL BE LEFT UNFINISHED TO CREATED ANY HAZARDOUS CONDITIONS.

35. CONTRACTOR SHALL CONFORM TO LOCAL AUTHORITIES, OWNERS, NEW YORK STATE BUILDING CODE, NEW YORK CITY BUILDING CODE, AND ARCHITECT'S INSURANCE REQUIREMENTS.

36. CONTRACTOR SHALL ENGAGE LICENSED PROFESSIONAL ENGINEER OR ARCHITECT TO PROVIDE ALL REQUIRED DRAWINGS AND DOCUMENTS FOR FILING AND OBTAINING APPROVALS AND FOR ALL CONTROLLED INSPECTIONS, WORK EQUIPMENT USE PERMITS, ETC. COST OF SAME SHALL BE INCLUDED IN CONTRACTORS BID PRICE.

37. ALL MOTORS, PUMPS, CONTROLS AND OTHER EQUIPMENT FOR USE IN THIS CONTRACT SHALL BE PROTECTED BY TARPAULIN OR BY BOXING AS SOON AS DELIVERED ON THE SITE, AND SHALL BE KEPT CLEAN AND DRY. THE MOTORS, PUMPS, EQUIPMENT, FANS AND MOVING PARTS SHALL BE KEPT COVERED SO AS TO ELIMINATE DIRT, DUST AND OTHER MATERIALS ENTERING THE PARTS DURING ERECTION AND CONSTRUCTION WORK ON THE BUILDING. SHOULD IT BE FOUND THAT ANY PARTS ARE DAMAGED DUE TO CARELESSNESS ON THE PART OF THE CONTRACTOR IN NOT PROVIDING PROPER PROTECTION, SUCH PART OR PARTS SHALL BE REPLACED BY THE CONTRACTOR AT HIS OWN COST AND EXPENSE. ALL OPENINGS IN DUCTS, PIPING, CONDUITS, ETC. SHALL BE PROPERLY PROTECTED WITH TEMPORARY CAPS OR PLUGS AT ALL TIMES.

38. CONTRACTOR SHALL PROVIDE OPERATING AND MAINTENANCE INSTRUCTION BOOKS TO OWNER. SAID BOOKS SHALL INCLUDE EQUIPMENT CUTS, REPLACEMENT OR PARTS SCHEDULES, FIXTURE CUTS, MANUFACTURERS OPERATING AND MAINTENANCE DATA, PARTS LIST, CHARTS, AS–BUILT DRAWINGS, SHOP DRAWINGS, ETC.

39. CONTRACTORS SHALL TAG ALL EQUIPMENT, TAG ALL VALVES, COMPLETE LEGEND IN PANELS, LABEL ALL PIPING, IDENTIFY ALL CONDUITS, PROVIDE VALVE CHARTS, RISER AND FLOW DIAGRAMS, ETC.

40. CONTRACTORS SHALL TEST, BALANCE ADJUST, CLEAN AND DEMONSTRATE OPERATION OF ALL SYSTEMS EQUIPMENT AND FIXTURES. CONTRACTOR SHALL PROVIDE ALL LABOR, MATERIALS, APPLIANCES, EQUIPMENT INSTRUCTIONS, TRANSPORTATION AND CONTRACTOR SHALL INCLUDE TWO DAYS FOR TEST, BALANCE AND ADJUSTMENT, CLEAN AND DEMONSTRATION FOR OWNERS PERSONNEL AS PART OF THIS PROCEDURE.

41. IT IS SPECIFICALLY THE INTENTION OF THIS SPECIFICATION TO HOLD THE CONTRACTOR RESPONSIBLE FOR ALL DAMAGE DONE TO ANY FACILITIES, EQUIPMENT, PAINTING, OR ARCHITECTURAL AND STRUCTURAL FEATURES OF THE BUILDING, BY EITHER HIS OWN WORKMEN OR BY ANY OF HIS SUB–CONTRACTORS. THE CONTRACTOR SHALL REPAIR ANY DAMAGE DONE BY HIS OWN WORKMEN OR SUB–CONTRACTORS. THE OWNER, AT ITS DISCRETION MAY WITHHOLD PAYMENTS EQUAL TO THE REASONABLE COST OF THE REPAIRS.

42. THIS CONTRACTOR SHALL NOT INTERRUPT ANY OF THE SERVICE OF THE BUILDING NOR INTERFERE WITH THE SERVICES IN ANY WAY WITHOUT THE EXPRESSED PERMISSION OF THE OWNER, ENGINEER AND THE SUPERINTENDENT.

43. VIBRATION ISOLATION AND SEISMIC RESTRAINTS.

A) THE WORK IN THIS SECTION CONSISTS OF FURNISHING ENGINEERING, LABOR, EQUIPMENT, MATERIALS, APPLIANCES, TOOLS, PERMITS AND IN PERFORMING ALL OPERATIONS AND SERVICES NECESSARY FOR AND/OR INCIDENTAL TO VIBRATION ISOLATION AND SEISMIC RESTRAINTS AND OTHER RELATED EQUIPMENT FOR THE SUBJECT PROJECT.

B) ALL PLUMBING EQUIPMENT LISTED IN THE EQUIPMENT SCHEDULE OF .75 HP AND OVER SHALL BE MOUNTED ON VIBRATION ISOLATORS TO PREVENT THE TRANSMISSION OF VIBRATION AND MECHANICALLY TRANSMITTED SOUND TO THE BUILDING STRUCTURE. VIBRATION ISOLATORS SHALL BE SELECTED IN ACCORDANCE WITH THE WEIGHT DISTRIBUTION SO AS TO PRODUCE REASONABLY UNIFORM DEFLECTIONS.

C) UNLESS OTHERWISE SPECIFIED, ALL EQUIPMENT SHALL BE RESTRAINED TO RESIST SEISMIC FORCES. RESTRAINTS SHALL MAINTAIN EQUIPMENT, PIPING AND DUCTWORK IN A CAPTIVE POSITION. RESTRAINT DEVICES SHALL BE DESIGNED AND SELECTED TO MEET THE SEISMIC REQUIREMENTS AS DEFINED IN THE LATEST ISSUE OF SBCCI 1994 EDITION, NYC & NYS SEISMIC CODES LATEST EDITIONS.

D) SEISMIC RESTRAIN SHALL NOT BE REQUIRED FOR THE FOLLOWING:

1) PIPING IN EXISTING EQUIPMENT ROOMS. ALL PLUMBING PIPING LESS THAN 2–1/2" I.D.
2) ALL PIPING SUSPENDED BY INDIVIDUAL HANGERS 12" OR LESS FROM THE TOP OF
3) THE DUCT SUPPORT TO THE BOTTOM OF THE SUPPORT FOR THE HANGER.

E) RESTRAINT DEVICES SHALL BE DESIGNED AND SELECTED TO WITHSTAND THE SEISMIC FORCES PRESCRIBED BY THE LATEST ISSUE OF THE UBC.

F) INSTALL PULL LINE SIZE FLEXIBLE PIPE CONNECTORS AT THE DISCHARGE AND SUCTION OF EACH PIECE OF EQUIPMENT. ALL CONNECTORS SHALL BE SUITABLE FOR USE AT THE TEMPERATURE, PRESSURE AND SERVICE ENCOUNTERED AT THE POINT OF INSTALLATION. END FITTING CONNECTORS SHALL CONFORM TO THE PIPE FITTING SCHEDULE.

G) ALL ISOLATION MATERIALS, FLEXIBLE CONNECTORS AND SEISMIC RESTRAINTS SHALL BE OF THE SAME MANUFACTURER AND SHALL BE SELECTED AND CERTIFIED USING PUBLISHED OR FACTORY CERTIFIED DATA. ANY VARIANCE OR NONCOMPLIANCE WITH THESE SPECIFICATION REQUIREMENTS SHALL BE CORRECTED BY THE CONTRACTOR IN AN APPROVED MANNER.

GENERAL NOTES PERTAINING TO PLUMBING DRAWINGS (CONT.)

44. CONTRACTOR SHALL EXCAVATE AND PROVIDE SHORING PILINGS, DEWATERING PUMPING, ETC. IN ORDER TO PERFORM HIS WORK. AFTER COMPLETION OF HIS WORK THE CONTRACTOR SHALL BACKFILL, MECHANICALLY TAMPED, BACKFILL, GRADE, PATCH TO MATCH ADJOINING SURFACES.

45. ALL SERVICES SHALL BE INSTALLED IN UTILITY TRENCHES OF 6-INCH THICK WELL TAMPED GRAVEL, CLEAN OF ROCKS, ETC. WHICH CAN DAMAGE PIPING AND COVERED WITH CLEAN GRAVEL AND EARTH TAMPED, FINISH PATCH TO MATCH.

46. TESTING:

WATER PIPING: 1-1/2 TIMES WORKING PRESSURE BUT NOT LESS THAN 125 PSIG

DRAINAGE PIPING: MAINTAIN A 10 FT COLUMN OF WATER OR AIR MAINTAIN 5 PSIG AFTER COMPLETION OF PIPING SMOKE OR PEPPERMINT TEST.

47. WATER PIPING UP TO 4" SHALL BE TYPE L COPPER PIPE WITH 95/5 SOLDERED JOINT WROUGHT COPPER OR BRASS FITTINGS, PIPING 4" AND LARGER SHALL BE TYPE K COPPER PIPE WITH BRAZED WROUGHT COPPER OR BRASS FITTINGS. CONTRACTOR MAY UTILIZE VIEGA PRO PRESS FIT JOINTING IN LIEU OF 95/5 SOLDERED JOINTS FOR ALL WATER PIPING UP TO AND INCLUDING 1 1/2" INCH PIPE SIZE IF APPROVED FOR USE BY NYC BUILDING CODE.

48. STRAINERS UP TO 2-1/2" SHALL BE MUESSCO 351 M BRONZE WITH STAINLESS STEEL STRAINER, Y-BODY. STRAINERS 2-1/2 INCHES AND LARGER SHALL BE MUESSCO 751 IRON BODY BRONZE MOUNTED WITH FLANGES, STAINLESS STEEL STRAINER, Y-BODY.

49. SILENT CHECK VALVES SHALL BE FLANGED TYPE ALL BRONZE MUESSCO 105 MBP CLASS 150 UP TO 2-1/2 INCHES. SILENT CHECK VALVES 2-1/2 INCHES AND LARGER SHALL BE MUESSCO 107 MBP IRON BODY BRONZE MOUNTED.

50. SHUTOFF VALVES UP TO 2-1/2 INCHES SHALL BE NELES-JAMESBURY 355 OR APOLLO 77100 600 WOG BRONZE 2-PIECE BALL VALVE WITH STAINLESS STEEL BALL AND STEM OR UNION BONNET. ALL BRONZE GATE VALVE STOCKHAM B 130 CLASS 150 VALVES 2-1/2 INCHES AND LARGER SHALL BE OUTSIDE STEM AND YOKE IRON BODY BRONZE MOUNTED GATE VALVE STOCKHAM G-612 CLASS 125.

51. DRAIN VALVES SHALL BE APOLLO 78-104 ALL BRONZE WITH HOSE END AND CAP.

52. CHECK VALVES UP TO 2-1/2 INCHES SHALL BE STOCKHAM B-921 ALL BRONZE CLASS 150 VALVES 2-1/2 INCHES AND LARGER SHALL BE STOCKHAM B-932 IRON BODY BRONZE MOUNTED CLASS 125.

53. GLOBE VALVES UP TO 2-1/2 INCHES SHALL BE STOCKHAM B-22 ALL BRONZE CLASS 150. VALVES 2-1/2 INCHES AND LARGER SHALL BE STOCKHAM G-512 IRON BODY BRONZE MOUNTED CLASS 125.

54. VALVES FOR GAS PIPING 2" TO 6" SHALL BE ROCKWELL FLOWSERVE NORDSTROM LUBRICATED GLAND TYPE CAST IRON WITH LEVER COCK HANDLE FLANGED 6 INCHES OR LARGER SHALL BE ROCKWELL FLOWSERVE NORDSTROM LUBRICATED GLAND TYPE STEEL WITH WORM GEAR OPERATOR FLANGED.

VALVES UP TO 2" SHALL BE ROCKWELL FLOWSERVE NORDSTROM LUBRICATED, 2-BOLT COVER CAST IRON WITH LEVER HANDLE COCK, THREADED ENDS.

55. PROVIDE DIELECTRIC FITTINGS BETWEEN DISSIMILAR METALS FOR PIPING. PROVIDE UNION TYPE EPCO DIELECTRIC FITTING.

56. PIPING UNDER CELLAR FLOOR SHALL BE SUPPORTED FROM CELLAR FLOOR SLAB, 5'-0" ON CENTERS AND AT EVERY FITTING OR CHANGE OF DIRECTION. SAID HANGERS SHALL BE EPOXY COATED, GALVANIZED WITH SADDLES, ¾" DIAMETER RODS.

57. CONTRACTOR SHALL FLUSH, CLEAN ALL NEW DRAINAGE PIPING.

58. HANGERS AND SUPPORTS:

A) HANGERS SHALL BE ADJUSTABLE BEAM TYPE CLEVIS HANGER WITH INSULATED SADDLES. IN LIEU OF CLEVIS HANGERS, CONTRACTOR MAY UTILIZE DOUBLE RODDED TRAPEZE HANGER. PIPING SUBJECT TO MOTION SHALL BE SUPPORTED BY PIPE ROLL HANGERS.

B) UNDER NO CONDITION SHALL ANY HANGERS, SUPPORTS, BELTS, RIVETS, ETC., PIERCE DUCTS.

C) HANGERS AND SUPPORTS – HANGERS AND SUPPORTS SHALL BE AS PER PARA. #8 WITH "CLEVIS" HANGERS AND INSULATION PROTECTION SHIELDS, PIPING SHALL NOT BE SUPPORTED FROM BRIDGING, CONDUITS, DUCTWORK OR OTHER PIPING. CONTRACTOR SHALL PROVIDE SUPPLEMENTARY STEEL (I.E. CHANNELS, ANGLES) AS REQUIRED.

D) ALL PIPE HANGERS FOR HORIZONTAL PIPING SHALL BE OF THE CLEVIS TYPE, FABRICATED FROM WROUGHT IRON AND ADJUSTABLE FOR ELEVATION WITH INSULATED SADDLES. PIPING SUBJECT TO MOTION, DUE TO EXPANSION OR CONTRACTION, SHALL BE SUPPORTED BY PIPE ROLL HANGERS.

E) HANGERS FOR COPPER PIPING SHALL BE COPPER OR COPPER CLAD ADJUSTABLE BEAM TYPE CLEVIS HANGER WITH INSULATED SADDLE. IN LIEU OF CLEVIS HANGERS, CONTRACTOR MAY UTILIZE DOUBLE RODDED TRAPEZE HANGER, PVC COATED STEEL CHANNELS WITH COPPER CLAMPS. PIPING SUBJECT TO MOTION SHALL BE SUPPORTED BY PIPE ROLL HANGERS.

F) HANGERS AND ACCESSORIES SHALL BE MANUFACTURED BY ANVIL GRINNEL OR F&S.

G) VERTICAL PIPING SHALL BE SUPPORTED AT EACH FLOOR AND CEILING AND AT EACH INTERMEDIATE HUB OR JOINT.

59. VALVE TAGS, CHARTS, SIGNS:

A) VALVES ARE TO BE PROVIDED WITH A BRASS TAG (APPROXIMATELY 1"X2" WITH STAMPED DESIGNATION NUMBER 5/8" HIGH) ATTACHED TO VALVE WITH SPRINKLE BY BRASS CHAIN. UPON COMPLETION OF THE WORK AND BEFORE FINAL ACCEPTANCE, THIS CONTRACTOR IS TO FURNISH TWO (2) TYPEWRITTEN LISTS AND DIAGRAMS OF ALL TAGGED VALVES, GIVING THEIR LOCATIONS, FUNCTIONS AND NUMBERS.

B) EACH CONTROLLING VALVE IS TO BE PROVIDED WITH AN APPROVED LETTERED SIGN. PROVIDE OTHER SIGNS WHERE REQUIRED AND AS DIRECT.

C) PIPING AND CONDUITS SHALL BE PROVIDED WITH PVC LABELS WITH ADHESIVE BACKS ADHERED TO SAID PIPING AND CONNECTS WITHIN MECHANICAL EQUIPMENT ROOMS, BOILER ROOMS AT ALL EQUIPMENT AND AS DIRECTED BY DESIGN PROFESSIONAL LABELS SHALL INDICATE SERVICE AND DIRECTION OF FLOW. THE LETTERING SHALL BE A MINIMUM OF 1" HIGH.

D) ALL EQUIPMENT SHALL BE PROVIDED WITH A WATERPROOF TAG. TAG SHALL INDICATE EQUIPMENT NUMBER, TYPE, MANUFACTURER, DATE, CHARACTERISTICS (MECHANICAL AND ELECTRICAL I.E. GPM, HEAD, HORESEPOWER, ETC.).

60. INSULATION:

A) WATER PIPING – RIGID FIBERGLASS PIPE INSULATION WITH ALL SERVICE JACKETS 1" THICK FOR ALL WATER PIPING UP TO 1½" PIPE SIZE AND 1½" THICK FOR 1½" AND LARGER PIPING.

B) STORM DRAINAGE PIPING – 1-1/2" THICK FIBERGLASS BLANKET, 1-1/2 LB DENSITY INSULATION WITH FOIL FACE FROM ROOF DRAIN SUMPS ON ALL PIPING. ENTIRE STORM DRAINAGE INSULATION SHALL BE ADHERED WITH COPPER WIRE 12" ON CENTER AND ADHESIVE.

C) INSULATE ALL HORIZONTAL SANITARY DRAINAGE PIPING SUBJECT TO SWEATING WITHIN HUNG CEILING SIMILAR TO STORM DRAINAGE OR WATER PIPING.

D) ALL WATER PIPING INSULATION SHALL BE ADHERED WITHIN ADHESIVE AND SELF STICK COVER BANDS 4" WIDE 3'-0"O.C.

E) LEADING EDGES OF DRAINAGE PIPE INSULATION SHALL BE OVERLAPPED BY ADJOINING INSULATION FOR 6" MINIMUM AND THEN SEALED WITH FOIL VAPOR BARRIER ADHESIVE & DUCT TAPE SO THAT NO FIBERGLASS INSULATION IS VISIBLE.

F) PIPE, FITTINGS, AND VALVES SHALL BE INSULATED UTILIZING PRE-MOLDED INSULATION FITTINGS OR INSULATED BLANKET AND/OR CEMENT WITH PRE-MOLDED COVER (I.E. ZESTON).

G) WHERE FROSTPROOFING IS INDICATED ON THE DRAWINGS FROSTPROOF ALL PIPE, VALVES AND FITTINGS, ETC. WITH ELECTRIC SELF LIMITING HEAT TRACING AND TWO (2) LAYERS OF 1" THICK FIBERGLASS BLANKET INSULATION, 3 LB. DENSITY WITH FOIL COVER FACING. ENCASE WITHIN 2 LAYER OF SEALERS IMMERSED FIBERGLASS CLOTH WITH WEATHERTIGHT JOINTS AND SEAMS. HEAT TRACING SHALL BE THERMON CO. OR RAYCHEM AS PROVIDED BY ELECTRICAL CONTRACTOR.

H) ALL FLAME SPREAD AND SMOKE DEVELOPED CRITERIA SHALL MEET NEW YORK CITY BUILDING CODE CRITERIA. (25/50)

I) COMPLY WITH NYC CITY AND NEW YORK STATE ENERGY CODE. UTILIZE THE MOST STRINGENT INSULATION REQUIREMENTS, AND AS INDICATED.

61. ALL OPENINGS THRU WALL ROOF FLOOR WATERTIGHT AND REINFORCED AS PER NOTES & DETAILS ON STRUCTURAL DOCUMENTS.

62. ANY WATER CLOSETS LAVATORIES, COUNTER SINKS, MOP SINKS, SHOWERS & THEIR TRIMS (IE. FLUSH TANKS, FLUSH VALVES, SHOWER FAUCETS, TUB. ALL SINK FAUCETS, LAVATORY FAUCETS, SINK DRAIN & TAILPIECE LAVATORY DRAIN TAILPIECE SHALL BE FURNISHED BY THE GENERAL CONTRACTOR & INSTALLED BY THE PLUMBING CONTRACTOR.

63. ALL EQUIPMENT. PIPING AND MATERIAL SHALL BE DELIVERED TO THE SITE. THE PLUMBING CONTRACTOR SHALL ACCEPT DELIVERY & TRANSPORT SAME TO AN AREA ONSITE FOR STORAGE UNTIL REQUIRED TO BE INSTALLED. GENERAL CONTRACTOR SHALL COORDINATE ALL DELIVERIES WITH THE PLUMBING CONTRACTOR.

64. CONTRACTOR SHALL PROVIDE ALL REQUIRED OFFSETS FOR RISERS TO SUIT ARCHITECTURAL LAYOUTS.

65. SERVICES:

A) FIRE PROTECTION WATER: CLASS 52, DUCTILE IRON CEMENT LINED WITH MECHANICAL FITTINGS AT ALL JOISTS COMPLY WITH NSF61, AWWA C151 & C115 & C104.

B) COMBINED SANITARY STORM: EXTRA HEAVY CAST IRON.

C) PROVIDE UTILITY TRENCHES FOR ALL SERVICES. TRENCHES SHALL BE CONTINUOUS UNDER SERVICES. TRENCHES SHALL BE WELL TAMPED 6" SAND LAYER ON TOP OF 6 INCH GRAVEL LAYER.

66. WHERE INDICATED AND WHERE REQUIRED, PROVIDE WATER HAMMER (SHOCK) ARRESTOR CERTIFIED ANSI/ASSE 1010-2004 STD. WATER HAMMER ARRESTORS SHALL HAVE COPPER BARREL, BRASS FITTING, STAINLESS STEEL BELLOWS MANUFACTURED BY SIOUX CHIEF MODEL 652A, B, C, D, E, F OR J.R. SMITH MODEL 5005, 5010, 5020, 5030, 5040, 5050 OR PPP MODEL SC 500, 750, 1000, 1250, 1500, 2000.

67. PLUMBING FIXTURES:

A) UNLESS OTHERWISE SPECIFIED, FURNISH SET, AND CONNECT ALL FIXTURES, INCLUDING ALL NECESSARY SUPPORTS, ALL EXPOSED BARS TRIMMNGS, INCLUDING FAUCETS, PRESSURE BALANCED SHOWER FAUCETS, FLUSH VALVES, TRAPS, TRAP WASTES, STRAINERS, CAST BRASS ESCUTCHEON, STOPS AND SUPPLIES SHALL BE CHROMIUM PLATED. ALL FIXTURES SHALL BE CLASS 'A' SET AT HEIGHT AS DIRECTED BY THE ARCHITECT. PIPING THROUGH WALLS OR FLOORS SHALL BE PROVIDED WITH ESCUTCHEONS PROVIDE 'CHINA CAPS' FOR ALL BOLT HEADS AS REQUIRED.

B) ALL FIXTURES SHALL BE SEPARATELY CONTROLLED BY APPROVED BRASS ANGLE OR GATE VALVE.

C) SEE ARCHITECTURAL DRAWING FOR FIXTURE SCHEDULE.

68. ALL WATER CLOSETS TUB & SHOWERS, LAVATORIES, KITCHEN SINKS, COUNTER SINKS, MOP SINKS, LAUNDRY SINKS, SHOWERS & THEIR TRIMS (IE. FLUSH TANKS, FLUSH VALVES, SHOWER FAUCETS, TUB & SHOWER FAUCETS, ALL SINK FAUCETS, LAVATORY FAUCETS, SINK DRAIN & TAILPIECE LAVATORY DRAIN TAILPIECE SHALL BE FURNISHED BY THE GENERAL CONTRACTOR & INSTALLED BY THE PLUMBING CONTRACTOR.

69. ALL APPLIANCES (IE. RANGES, DISHWASHER, CLOTHES WASHER, REFRIGERATOR SHALL BE FURNISHED BY THE GENERAL CONTRACTOR & INSTALLED BY THE PLUMBING CONTRACTOR ELECTRICAL CONTRACTOR.

70. ALL FIXTURES & APPLIANCES SHALL BE DELIVERED TO THE SITE. THE PLUMBING CONTRACTOR SHALL ACCEPT DELIVERY & TRANSPORT SAME TO AN AREA ONSITE FOR STORAGE UNTIL REQUIRED TO BE INSTALLED. GENERAL CONTRACTOR SHALL COORDINATE ALL DELIVERIES WITH THE PLUMBING CONTRACTOR.

71. CONTRACTOR SHALL PROVIDE ALL REQUIRED OFFSETS FOR RISERS TO SUIT ARCHITECTURAL LAYOUTS.

SERVICE WATER NOTES:

32) – SERVICE WATER HEATING EQUIPMENT PERFORMANCE EFFICIENCY RATING IS 93% AS INDICATED IN DRAWING P002.00, PLUMBING FIXTURES AND EQUIPMENT No. 38 WATER HEATER.

33) – HOT WATER HEATING SYSTEM IS CIRCULATING SYSTEM. NO HEAT TRAPS ARE REQUIRED.

34) – WATER PIPING INSULATION IS INDICATED ON PLUMBING DRAWING P002.00, PARAGRAPH 60.
INSULATION OF PIPING COMPLIES WITH 2106 ENERGY CONSERVATION CODE SECTION C404.4 FOR INSULATION OF PIPING AS PER TABLE C403.2.10. AND AND WATER PIPING COMPLIES WITH SECTION C404.5 FOR EFFICIENT HEATED WATER SUPPLY PIPING. ALSO IT COMPLIES WITH SECTION C404.5.1 FOR MAXIMUM ALLOWABLE PIPE LENGTH IN ACCORDENCE WITH TABLE C404.5.1.

35) – SERVICE HOT WATER SYSTEM CONTROLS WERE INDICATED ON PLUMBING DRAWING P002.00, PARAGRAPH 39.

PLUMBING FIXTURES AND EQUIPMENT

1. FAI WALL PLATE:

JR SMITH 9005 CP, CHROME PLATED BRONZE WALL PLATE WITH PIPE CLAMP.

2. WALL HYDRANT (WH):

WALL HYDRANT, JR SMITH 5509QT, NICKEL BRONZE, NON-FREEZE QUARTER TURN HYDRANT WITH VACUUM BREAKER, HOSE CONNECTION, T HANDLE STAINLESS STEEL BOX CYLINDER LOCK, "WATER ENGRAVED ON COVER".

3. FIRE EXTINGUISHER:

POTTER ROEHMER MODEL 3010 ABC MULTI-PURPOSE DRY CHEMICAL FIRE EXTINGUISHER WITH 1754 CABINET AND 1900 LETTERING.

4. FLOOR DRAIN (REFUSE ROOM, M.E.R., WATER & GAS ROOM, STORAGE)

JR SMITH MODEL 2233M, 3" DEEP SEAL GALVANIZED CAST IRON FLOOR. DRAIN WITH NB INLET GRATE, SEDIMENT BUCKET, VANDALPROOF SCREWS.

5. MS

FIAT MODEL MSB 36X24 MOLDED STONE MOP SINK 36X24X10"H WITH ALUMINUM RIM GUARDS, 830AA FAUCET CP WITH TOP BRACE, PAIL HOOK, THREADED OUTLETS, VACUUM BREAKER, 832AA HOSE WITH WALL CLAMP, 889CC S/S MOP RACK, SS GRID DRAIN 1453BB.

6. SUMP PUMP IN ELEVATOR PIT

SUMP PUMP IN CONCRETE PIT WITHIN ELEVATOR PIT, STANCO MODEL SE-50, SIMPLEX SUMP PUMP (OR EQUAL FEDERAL, KETCHAM OR DUNRITE) 50 GPM, 20 FT.HD., 208V, 1PH, 60HZ, 1/2HP, 3600 RPM, 16-1/4"H, 9-1/4"W, WITH OIL MINDER CONTROL WITH BUILT-IN AUDIBLE AND VISUAL ALARM SILENCER BUTTON, OIL MINDER PROBE, HIGH ALARM LIQUID LEVEL CONTROL PROBE PLUG IN POWER, STAINLESS STEEL, ENCLOSURE FOR PUMP FIBREGLAS ENCLOSURE MULTI-OPTION CONTROL SYSTEM NEMA 4X.

7. AREA DRAIN

JR SMITH MODEL 2250CG, GALVANIZED CAST IRON BODY SEDIMENT BUCKET, GALVANIZED GRATE, NO HUB ADAPTOR.

8. PATIO ROOF & MAIN TERRACE (PD & TD) DRAINS

JR SMITH SPECIAL SQ-1-3377 (SEE DETAIL) WITH SUMP RECEIVER UNDER DECK CLAMP EXPANSION JOINT, GALVANIZED BODY FLASHING RING CLAMPING RING, GRAVEL STOP, SECONDARY FLASHING CLAMP ADJUSTABLE EXTENSION PATIO/TERRACE GALVANIZED DECK GRATE, FLOW CONTROL WEIR.

9. FLOOR DRAIN B: (MER, BOILER ROOM) (ALTERNATE)

JR SMITH MODEL 2495G 3" DEEP SEAL CAST IRON FLOOR. DRAIN WITH DUCTILE IRON INLET GRATE, SEDIMENT BUCKET, VANDALPROOF SCREWS.

10. FLOOR DRAIN C: (RUBBISH ROOM) (WATER TREATMENT ROOM) (ALTERNATE)

JR SMITH MODEL 2142 3" DEEP SEAL GALVANIZED CAST IRON FLOOR. DRAIN WITH GALVANIZED CAST IRON INLET GRATE, SEDIMENT BUCKET, VANDALPROOF SCREWS.

11. CLEANOUTS:

a) PROVIDE J.R. SMITH OR JOSAM, ZURN 4000 SERIES CLEANOUTS (CHROMEPLATED WALL TYPE; SCORIATED NICKLE BRONZE TOP FLOOR TYPE). FLOOR CLEANOUTS SHALL BE PROVIDED WITH CARPET MARKERS IN CARPETED AREAS AND TILE RECESSES IN TILED AREAS. EXTERIOR CLEANOUTS SHALL BE HEAVY DUTY ROADWAY TYPE ROUGH BRONZE WITH SCORIATED BRONZE TOP.

12. AIR VENTS:

a) MAID-O-MIST MODEL 74 OR BELL & GOSSET MODEL 95 AT ALL HIGH POINTS OF DOMESTIC HOT WATER PIPING. BELL & GOSSET MODEL A107 WHERE INDICATED

13. DRAIN VALVES:

a) JENKINS 112W/647 CHAIN AND CAP OR APOLLO BALL VALVE WITH THREADED END CAP AND CHAIN AT ALL LOW POINTS OF DOMESTIC WATER SYSTEMS.

14. PIPE AND CONDUIT SLEEVES:

a) THE CONTRACTOR SHALL FURNISH AND SET ALL SLEEVES USED TO ACCOMMODATE PIPE OR DUCTS PASSING THROUGH WALLS, FLOORS, AND PARTITIONS. UNLESS OTHERWISE SPECIFIED, SLEEVE SHALL BE 18 GAUGE STEEL. ALL PIPE SLEEVES THROUGH BASEMENT/CELLAR OR EXTERIOR WALLS AND ROOFS SPACES SHALL BE WATERTIGHT TYPE K COPPER.

b) GAS PIPING PENETRATIONS THROUGH EXTERIOR WALLS AND ROOFS SHALL BE PROVIDED WITH THUNDERLINE CORD. LINK SEAL MODULAR MECHANICAL INTERLOCKING LINKS TIGHTENED FOR A WATERTIGHT FIT.

15. BACKFLOW PREVENTORS:

a) LOW AND INTERMEDIATE HAZARD – WILKINS MODEL 950 – 3/4" THRU 6" DOUBLE CHECK VALVE ASSEMBLY OR EQUAL WATTS OR FEBCO

b) HIGH HAZARD – WILKINS MODEL 975 – 3/4" THRU 6" REDUCED PRESSURE ZONE ASSEMBLY OR EQUAL WATTS OR FEBCO

c) FIRE PROTECTION WATER SERVICE – WILKINS MODEL 350 DA – 6" DETECTOR CHECK VALVE ASSEMBLY OR EQUAL WATTS OR FEBCO.

16. GAS METER:

a) GAS METER SHALL BE UTILITY APPROVED, UTILITY FURNISHED, CONTRACTOR INSTALLED.

17. WATER METER:

a) WATER METER SHALL BE NYC APPROVED TURBINE TYPE. CONTRACTOR FURNISHED AND INSTALLED.

18. HOSEBIBB:

A. HOT OR COLD WATER – CHICAGO 998 ROUGH CHROMED BRASS WITH 3/4" MALE HOSE END AND VACUUM BREAKER.
B. PROVIDE A GATE VALVE AND SHOCK ARRESTOR ON THE SUPPLY PIPE TO EACH BIBB.

19. POTABLE WATER DIAPHRAGM EXPANSION TANK – TACO MODEL PAX-12 WITH DIAPHRAGM. BELL & GOSSET MODEL PT-12 WITH DIAPHRAGM.

20. DRAIN PAN ALARM DYNAQUIP, FLOWMASTER, WATTS, LIQUIDTECH OR EQUAL WITH SOLENOID VALVE ON COLD WATER TO TANK, SENSOR IN DRAIN PAN, ALARM IN SERVICE ROOM WITH SILENCE BUTTON.

21. THERMOMETERS

A. TRERICE ADJUSTABLE ANGLE MODEL V80732 WITH SEPARATE SOCKET, MERCURY FREE.

B. PROVIDE THEMOMETERS AT INLET AND OUTLET OF BOILERS, HEAT EXCHANGERS, MIXING VLVES AND WHERE INDICATED ON THE DRAWINGS.

22. PRESSURE GUAGES

A. TRERICE ADJUSTABLE ANGLE MODEL 600 WITH LEVER HANDLE COCK AND SNUBBER.

B. PROVIDE PRESSURE GAUGES AT INLET AND OUTLET OF PUMPS, HEAT EXCHANGERS, MIXING VLVES AND WHERE INDICATED ON THE DRAWINGS.

23. TEMPERARTURE MIXING VALVE:

A. HOLBY ALL BRONZE SELF-CONTAINED VALVE SET (OUTLET TEMPERATURE (ADJUSTABLE)).

24. SHOCK ABSORBERS (ARRESTORS):

A. PROVIDE ON ALL HOT AND COLD WATER BRANCHES TO ALL FIXTURES, JAY R. SMITH, HYDROTOL, PDI SIZED.

1)
1 – 10	FIXTURE UNITS – SIZE A
11 – 30	FIXTURE UNITS – SIZE B
31 – 60	FIXTURE UNITS – SIZE C
61 – 100	FIXTURE UNITS – SIZE D
101 – 150	FIXTURE UNITS – SIZE E
151 – 250	FIXTURE UNITS – SIZE F

2) FOR PRESSURES 65 PSIG AND ABOVE, UTILIZE ONE SIZE LARGER

B. ALL CLOTHES WASHERS DISHWASHERS, 3 COMPARTMENT SINKS, SUPPLIES SHALL EACH HAVE SIZE C UNIT MINIMUM.
C. ALL WATER CLOSETS SUPPLIES SHALL EACH HAVE SIZE B UNIT MINIMUM.

25. ESCUTCHEONS:

A. ESCUTCHEONS SHALL BE PROVIDED AT ALL EXPOSED FINISHED SURFACES PIERCED BY PIPE, CONDUITS, SLEEVES AND SHALL EXTEND AGAINST THE FINISHED SURFACE OF WALL, FLOOR OR CEILING SO THAT IMBEDDED SLEEVES ARE COMPLETELY CONCEALED. ESCUTCHEONS SHALL BE CAST BRASS, CHROMIUM- PLATED WITH SET SCREWS AND ATTACHED TO PROJECTING SLEEVES OR PIPES AND NOT TO PIPE COVERING.

26. RELIEF VALVE:

A. WATTS MODEL 40-140 ALL BRONZE SELF-CONTAINED VALVE SET AT 120°F (ADJUSTABLE)

27. VACUUM BREAKERS:

A. FAUCETS, HOSE BIBBS: MODEL 81 CHROME PLATED.
B. WITHIN PIPING TO EQUIPMENT – MODEL 288 CHROME PLATED.

28. CURB VALVE AND BOX:

A. MUELLER CAST IRON ROADWAY ACCESSIBLE VALVE BOX WITH LOCK, STEM, SLEEVE, EXTENEDED STEM, 2360 RESILIENT WEDGE SHUTOFF VALVE FOR SERVICE INTENDED, CAST IN INSCRIBED HOUSING FOR SERVICE INTENDED.

29. FLEXIBLE GAS PIPE CONNECTION: TO RANGE, FLEXONICS PVC COATED STAINLESS STEEL BELLOWS TYPE HOSE WITH STAINLESS STEEL OR BRASS FITTING S- 3/4", 3'-0".

30. REFRIGERATION/FREEZER ICE MAKER SUPPLY BOX:

OATEY MODEL 38683 SUPPLY BOX WITH 1/4 TURN BALL VALVE, 6"W, 6"H, 3-3/8"D, FACE PLATE 8-1/4"W, 8-1/4"H, BALL VALVE BRASS WITH COPPER SEAT.

31. CLOTHES WASHER SUPPLY AND DRAIN BOX:

OATEY MODEL 38981 SUPPLY BOX WITH 2" DRAIN, OPENING 1/4 TURN, 1/2" BALL VALVES BRASS WITH COPPER SEAT, 9"W, 6-1/8"H, 3-1/8"D, FACE PLATE 10-7/8"W, 7-3/4"H, ABS OR PVC TAILPIECE, 2" DRAIN.

32. LAVATORY TRIM:

MCGUIRE, 3/8" CHROMED FLEXIBLE SUPPLY WITH BALL VALVE.

33. WATER CLOSET FLOOR FLANGE:

ADJUSTABLE WATER CLOSET FLOOR FLANGE LEVEL FIT ABS WITH METAL RING AND GASKET, OATEY OR EQUAL PPP, SIOUX CHIEF.

34. DISHWASHER PAN:

OATEY MODEL 34060 – 28X28 CPVC DRAIN PAN, COLOR TO BE SELECTED BY ARCHITECT.

35. CLOTHES WASHER MACHINE PAN:

OATEY MODEL 34052, 28x30 PVC DRAIN PAN, COLOR TO BE SELECTED BY ARCHITECT.

36. DUPLEX SEWAGE EJECTOR:

FEDERAL PUMP MODEL VSS4A-34-QD DUPLEX SEWAGE EJECTOR SUBMERSIBLE QUICK DISCONNECT PUMP SET (OR EQUAL WEIL) TWO (2) PUMPS EACH RATED AT 150 GPM, 36 FT.HD., 3HP, 4" DISCHARGE 208V, 3PH, 60HZ, 54"DIA., 9'-6" DEPTH, INLET AT 2'-6" WITH CAST IRON BASIN CHECKERED NON-SKID STEEL GASKET TOP, 3" TOP VENT, BRONZE PUMPS IMPELLER, STAINLESS STEEL SHAFTS REMOTE LUBRICATION LINES, COMB. MAG. STARTER W/HOA SELECTOR SWITCH & PUSH TO TEST PILOT LIGHT WITHIN CONTROL PANEL AND SUBMER ABULB CONTROL, AUTO ALTERNATOR, HIGH WATER ALARM, SEALED HIGH EFFICIENCY MOTORS REMOVAL CABLES.

37. DUPLEX SUMP PUMP

FEDERAL PUMP MODEL VSS4A-3-4 DUPLEX SUMP PUMPSET (OR EQUAL) TWO (2) PUMPS EACH RATED AT 150 GPM, 42 FT.HD., 5HP, 4" DISCHARGE 208V, 3PH, 60HZ, 54"DIA., 9'-6" DEPTH, INLET AT 3'-6" WITH FIBERGLASS BASIN, CHECKERED NON-SKID STEEL GASKET TOP, BRONZE PUMPS IMPELLER, STAINLESS STEEL SHAFTS REMOTE LUBRICATION LINES, COMB. MAG. STARTER W/HOA SELECTOR SWITCH & PUSH TO TEST PILOT LIGHT WITHIN CONTROL PANEL AND SUBMERS ABULB CONTROL, AUTO ALTERNATOR, HIGH WATER ALARM, SEALED HIGH EFFICIENCY MOTORS, REMOVAL CABLES.

38. WATER HEATER:

A. BRADFORD WHITE CORP. MODEL EF-100 T-399 E-3NA GAS FIRED DOMESTIC HOT WATER STORAGE HEATH TANK 28¼" DIA, 77⅝"H, 100 GALLONS 451 GALLONS PER HOUR RECOVERY AT 100°F RISE, 521 GALLONS PER HOUR RECOVERY FIRST HOUR, WITH THERMAL EFFICIENCY (93 %), 1½" INLET, 1½" OUTLET, ¾" GAS CONNECTION ASME TEMPERATURE & PRESSURE RELIEF VALVES.

VITA GLASS IN TANK LINING SEDIMENT REDUCTION SYSTEM MAGNESIUM ANODE RODS, 300,000 BTUH GAS 4½"WC, ELECTRONIC CONTROLS, ELECTRONIC IGNITION, ¾" BRASS DRAIN VALVE, 3 YEAR WARRANTY, MEA 103-79 E VO/II 4" CPVC INLET AND OUTLET 399,000 BTUH.

39. HOT WATER CIRCULATION PUMP:

A. PROVIDE AN IN-THE-LINE HORIZONTAL, OIL-LUBRICATED PUMP SPECIFICALLY DESIGNED AND GUARANTEED FOR QUIET OPERATION AND SUITABLE FOR 180 DEGREE MAXIMUM WATER TEMPERATURE AND 125 P.S.I. WORKING PRESSURE.

B. THE PUMP SHALL BE ALL BRONZE EQUIPPED WITH A 250°F WATERTIGHT SEAL TO PREVENT LEAKAGE AND A 1750 RPM MOTOR THAT IS NON-OVERLOADING AT ANY POINT ON THE PUMP CURVE WITH BUILT-IN THERMAL OVERLOAD PROTECTION SUITABLE FOR 120 VOLTS, 60 CYCLE SINGLE PHASE ALTERNATING CURRENT. PROVIDE MOTOR STARTER. PUMP SHALL BE A TACO ALL BRONZE CIRCULATOR, 1/4 HP, 115V, 1PH, 60HZ, 3 GPM, 8 FT HD OR BELL & GOSSETT PR.

40. TRAP PRIMER:

A. WHERE INDICATED PROVIDE TRAP PRIMER FOR A FLOOR DRAIN. TRAP PRIMER SHALL BE SIOUX CHIEF MODEL 695-Q WITH A VACUUM BREAKER OR PPP MODELS PO-500 OR P-2 EACH PRIMER SHALL BE PROVIDED WITH AN ACCESS DOOR WITH A VERTICAL PIPE LOOP ABOVE THE SUPPLY PIPE TEE. PIPE CONNECTION TO COLD WATER SUPPLY SHALL BE CLOSE TO FIXTURES IN THE SAME ROOM AS THE FLOOR DRAIN.

41. SHOCK ARRESTOR:

WHERE INDICATED AND WHERE REQUIRED, PROVIDE WATER HAMMER (SHOCK) ARRESTOR CERTIFIED ANSI/ASSE 1010-2004 STD. WATER HAMMER ARRESTORS SHALL HAVE COPPER BARREL, BRASS FITTING, STAINLESS STEEL BELLOWS MANUFACTURED BY SIOX CHIEF MODEL 652A, B, C, D, E, F OR J.R. SMITH MODEL 5005, 5010, 5020, 5030, 5040, 5050 OR PPP MODEL SC 500, 750, 1000, 1250, 1500, 2000.

42. PLUMBING FIXTURES:

A. T&S – McGUIRE MODEL 1221 WASTE AND OVERFLOW CAST BRASS CHROMEPLATED WITH 1-1/2, 17 GA. SEAMLESS BRASS TUBING H LENGTH TO BE DETERMINED BY CONTRACTOR TO SUIT.

B. WC – McGUIRE MODEL BV 2166, 1/2"x3/8 CP SUPPLY WITH BALL VALVE, 1/4 TURN, WALL FLANGE, RISER TO SUIT.

C. LAV – McGUIRE MODEL BV 2165, 1/2"x3/8 CP SUPPLIES WITH BALL VALVE, 1/4 TURN, RISER TO SUIT. WALL FLANGES, 201 1-1/4x1-1/2 CP P-TRAP WITH CLEANOUT PLUGS, CP BRASS TUBULAR, 17 GA. WALL BEND WITH WALL FLANGE.

D. SK (KS, LS) McGUIRE – 1/2x1/2 SUPPLIES WITH BALL VALVES, 1/4 TURN, RISERS TO SUIT, 204 1-1/2x2" CP P-TRAP WITH CLEANOUT PLUGS, CP BRASS TUBULAR, 17 GA. WALL BEND VERTICAL NOZZLE WITH SIDE DISHWASHER DRAIN CONNECTION ON K 8.

43. DRIVEWAY/PARKING DRAIN:

J.R. SMITH MODEL 2250CUM CAST IRON BODY WITH FLASHING COLLAR, DUCTILE IRON GRATE, SLOTTEO SEDIMENT BUCKET 7¾" DEEP BODY VANDAL PROOF GRATE.

44. TRENCH DRAIN:

J.R. SMITH MODEL 2710CBUM MODULE TRENCH DRAIN CAST IRON BODY DUCTILE IRON GRATES PROOF, FLASHING CLAMP SEDIMENT BUCKET HEEL PROOF.

1e2713 – 1A SECTION 3B SECTIONS ±4'-0"L – 4" PIPE
1e2714 – 1A SECTION 4B SECTIONS ±5'-0"L – 4" PIPE

TOTAL LENGHT ±9'-0"L – LEFT TO RIGHT SECTIONS AND AS INDICATED B,B,A,B,B,B,A,B,B,

45. YARD DRAIN (YD)

J.R. SMITH MODEL 1410 C2RCUMCL CAST IRON BODY WITH FLASHING COLLAR DUCTILE IRON GRATE, SEDIMENT BUCKET, VANDAL PROOF, UNDER DECK CLAMP, SUMP RECEIVER, HEEL PROOF GRATE.

46. ROOF DRAIN (RD) CONTROLLED FLOW RAINTROL

J.R. SMITH MODEL 1085YLRCUG RAINTROL WITH EXPANSION JOINT, SUMP RECEIVER FLASHING CLAMP, DUCTILE IRON GRATE CONTROLLED FLOW WEIR, GALVANIZED IRON BODY UNDER DECK CLAMP.

47. ROOF DRAIN (NON CONTROLLED) – ROOF OVER MER, BULKHEAD (RD 1,2,3,4) JR SMITH MODEL 101SLC2RUC105J WITH UNDERDECK CLAMP, SUMP RECEIVER, EXPANSION JOINT, CALV CAST IRON DOME.

48. PLUMBING FIXTURE, APPLIANCES ALL PLUMBING FIXTURES, TAGIR FAUCETS, FLUSH VALVES, TRIM SEATS, ETC. IS INDICATED IN ARCHITECTS DOCUMENT FURNISH BY G C/ PLUMBING CONTR AND INSTALLED BY PLUMBING CONTRACTOR (DRAINS, SUPPLIES, TRAPS, ETC. PROVIDED BY PLUMBING CONTRACTOR ALL APPLIANCES AS INDICATED IN ARCHITECTS DOCUMENTS FURNISHED BY G.C. AND INSTAILED BY PLUMBING CONTRACTOR. POWER WIRING AND RECEPTECLES BY ELECTRICAL CONTRACTOR.

49. FILTER FOR ICE MACHINE: 3M ICE140 CARTRIDGE TYPE WITH SIX(6) SPARE FILTERS

LAST SAVED: Tue, 28 Jan 2020 – 10:13am

OWNER

ESSEN MEDICAL CENTER
2015 GRAND CONCOURSE, BRONX NEW YORK, 10453

PROJECT NAME

ESSEN MEDICAL CENTER
899 ELTON AVENUE, BRONX, NEW YORK 10451

REV.	DATE	DESCRIPTION
01	12/20/2019	ISSUED FOR OWNER / DOB APPROVAL

ARCHITECT

PARAB ASSOCIATES
ARCHITECTS AND PLANNERS
188 BOULDER RIDGE RD. SCARSDALE, NY 10583
TEL:914-954-1522

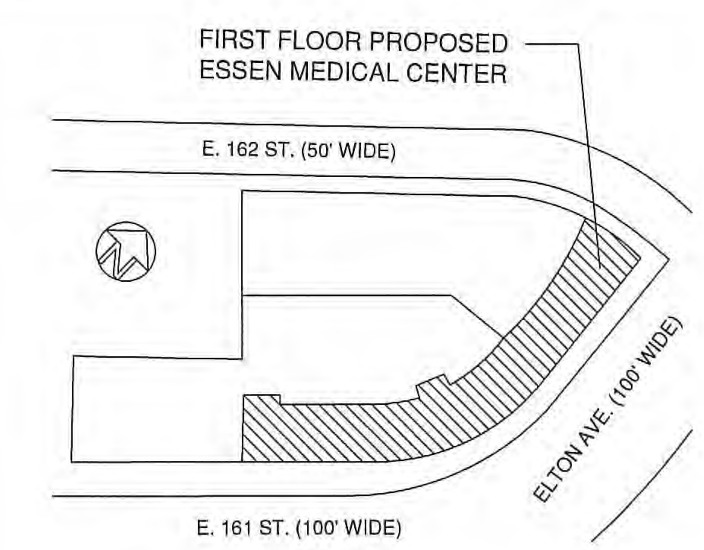

KEY PLAN N.T.S.

NYC Buildings
Andre Meredith
APPROVED
Date: 02/21/2020

BLOCK: 2383 LOT: 7501 CB: 203 BIN# 2127429

ESSEN MEDICAL CENTER
899 ELTON AVENUE, BRONX, NEW YORK 10451

Drawing Title

PLUMBING NOTES CONTINUED AND PLUMBING FIXTURE & EQUIPMENT NOTES

SEAL & SIGNATURE

REGISTERED ARCHITECT VILAS PARAB 014767 STATE OF NEW YORK

Date: 08/25/2017
Project No.:
Drawn by:
Checked by
DWG No.:

P-002.00

CAD FILE No.: 2 OF 7

DOB Project Number

E:\0 trabajos\899 ELTON AVENUE, BRONX, NEW TORK 10451\DWG\A-014.00 RISER DIAGRAM OLD.dwg

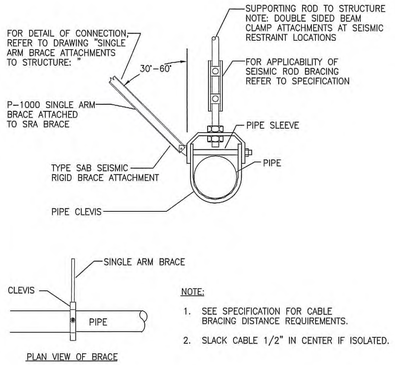

NOTE:

1. SEE SPECIFICATION FOR CABLE BRACING DISTANCE REQUIREMENTS.
2. SLACK CABLE 1/2" IN CENTER IF ISOLATED.

TRANSVERSE ARM BRACE FOR CLEVIS HUNG PIPING

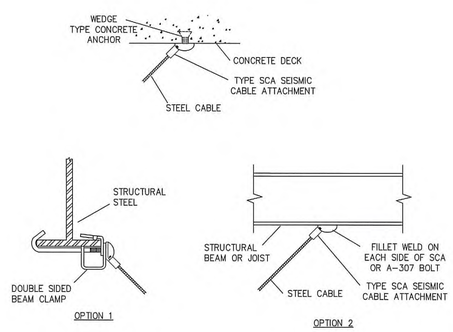

TYPICAL CABLE CONNECTIONS TO STRUCTURE

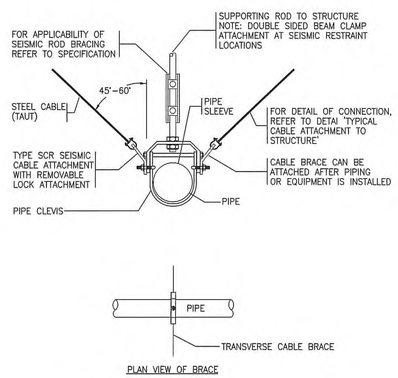

NOTE:

1. SEE SPECIFICATION FOR CABLE BRACING DISTANCE REQUIREMENTS.
2. SLACK CABLE 1/2" IN CENTER IF ISOLATED.

TYPICAL TRANSVERSE CABLE BRACING FOR CLEVIS HUNG PIPING & CONDUIT

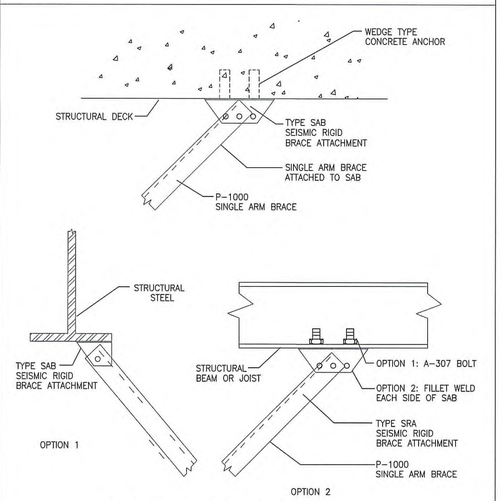

SINGLE ARM BRACE ATTACHMENT TO STRUCTURE

SEISMIC DETAILS

NO SCALE

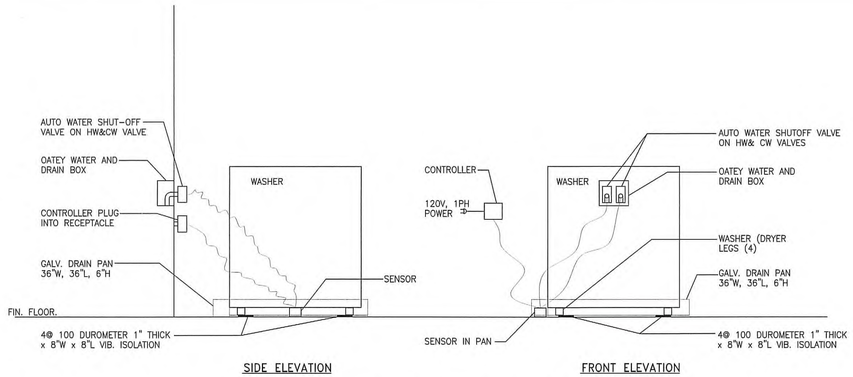

AUTO WATER SHUT-OFF FOR ALL CLOTHES WASHER UNITS

NO SCALE

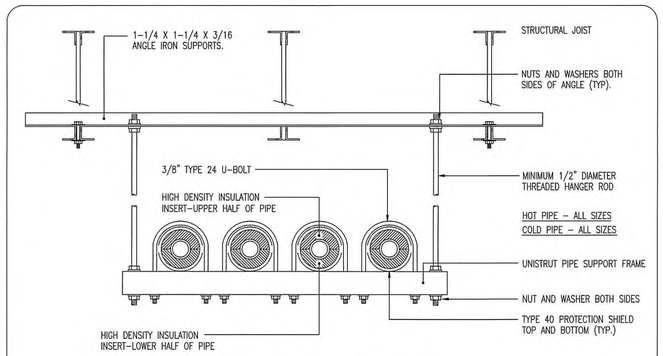

HORIZONTAL PIPE SUPPORT DETAIL

N.T.S.

OWNER

ESSEN MEDICAL CENTER

2015 GRAND CONCOURSE, BRONX NEW YORK, 10453

PROJECT NAME

ESSEN MEDICAL CENTER

899 ELTON AVENUE, BRONX, NEW YORK 10451

REV.	DATE	DESCRIPTION
01	12/20/2019	ISSUED FOR OWNER / DOB APPROVAL

ARCHITECT

PARAB ASSOCIATES ARCHITECTS AND PLANNERS

188 BOULDER RIDGE RD. SCARSDALE, NY 10583
TEL:914-954-1522

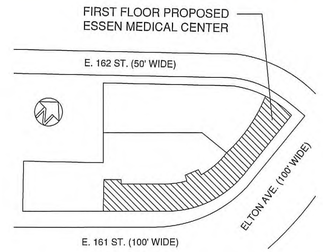

KEY PLAN N.T.S.

NYC Buildings
Andre Meredith
APPROVED
Date: 02/21/2020

BLOCK: 2383 LOT: 7501 CB: 203 BIN# 2127429

ESSEN MEDICAL CENTER

899 ELTON AVENUE, BRONX, NEW YORK 10451

Drawing Title

PLUMBING DETAILS
SHEET 1

SEAL & SIGNATURE

REGISTERED ARCHITECT ANDRE S. PARAB 014767 STATE OF NEW YORK

Date: 08/25/2017	
Project No.:	
Drawn by:	
Checked by	
DWG No.:	P-003.00
CAD FILE No.:	3 OF 7

DOB Project Number

LAST SAVED: Tue, 28 Jan 2020 - 10:13am

E:\0 trabajos\899 ELTON AVENUE, BRONX, NEW TORK 10451\DWG\A-014.00 RISER DIAGRAM OLD.dwg

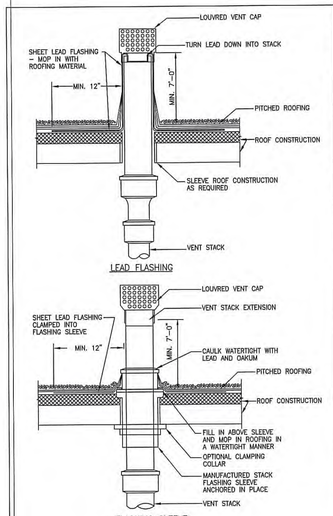

VENT THRU ROOF
NO SCALE

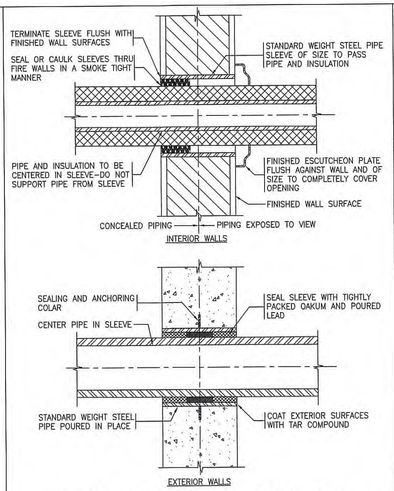

DETAIL OF PIPE SLEEVE THRU WALL
NO SCALE

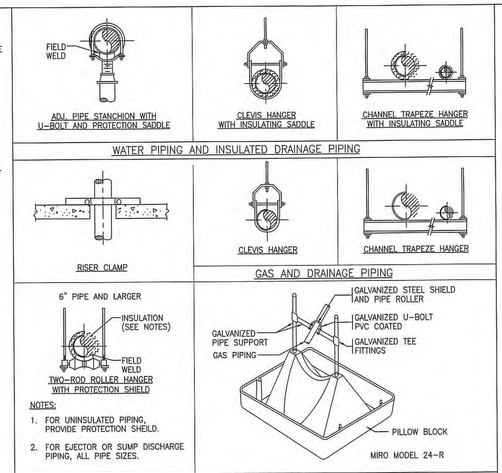

DETAILS OF PIPE HANGERS
NO SCALE

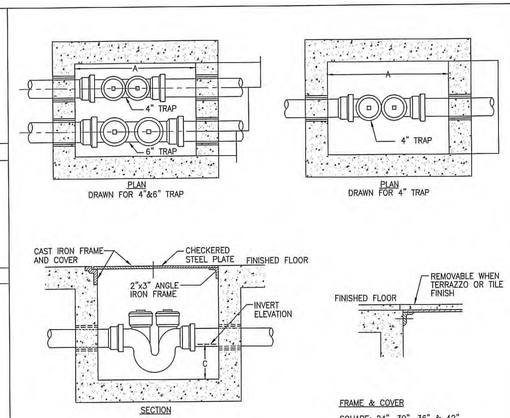

DIM	TRAP SIZE					
	4	5	6	8	10	12
A	30	36	36	48	48	54
B	24	24	24	24	36	36
C	8	9	10	12	14	18
D	12	12	12	16	18	20
E	9	9	9	12	12	14

NOTE: PITSIZE MAY BE INCREASED OR DECREASED TO CONFORM TO NEAREST COMMERCIAL FRAME SIZE OR STEEL PLATE WIDTH AS GIVEN BELOW

FRAME & COVER

SQUARE: 24", 30", 36" & 42"

RECTANGULAR: 18"x24"
30"x24"
36"x24"
48"x24"
48"x36"

STEEL PLATE

WIDTH: 24", 36", 42", 48", 60", & 72"

PLATE THICKNESS
3/16" FOR MAX. SPAN OF 30"
1/4" FOR MAX. SPAN OF 36"
5/16" FOR MAX. SPAN OF 48"
3/8" FOR MAX. SPAN OF 60"
1/2" FOR MAX. SPAN OF 72"

HOUSE TRAP DETAIL
NO SCALE

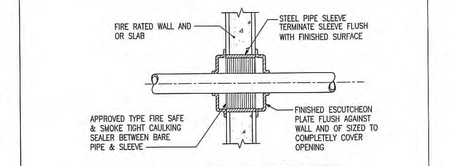

UN–INSULATED PIPE SLEEVE THRU FIRE RATED CONSTRUCTION
N.T.S.

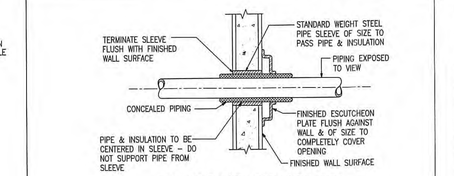

INSULATED PIPE THRU NON–FIRE RATED CONSTRUCTION
N.T.S.

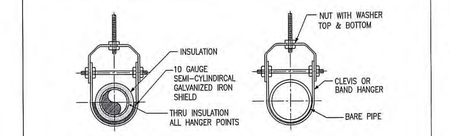

CLEVIS HANGER DETAIL
N.T.S.

CLEVIS HANGER DETAIL
N.T.S.

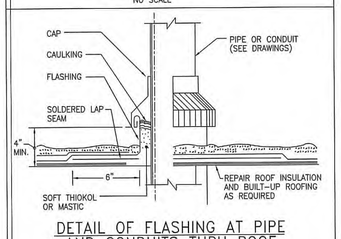

DETAIL OF FLASHING AT PIPE AND CONDUITS THRU ROOF
NO SCALE

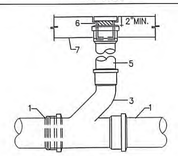

1. PVC TO CAST IRON PIPE ADAPTER
2. C.I. LONG SWEEP BEND. SAME SIZE AS SEWER MAIN
3. C.I. COMBINATION Y AND 1/8 BEND, 4" INLET EXCEPT WHERE SMALLER SIZE IS REQUIRED BY NOTE 5.
4. USE A REDUCER AT THIS POINT TO REDUCE TO 4" WHERE SEWER MAIN IS LARGER THAN 4"
5. IF SEWER IS LESS THAN 4" MAKE SAME SIZE OF SEWER
6. EXTRA HEAVY CAST BRASS CLEANOUT FERRULE WITH FLANGED SCREW PLUG HAVING COUNTERSUNK WEAD.
7. FINISHED SLAB; CLEANOUT AT GRADE TO BE PROVIDED WITH CONCRETE SLAB 12'x12'x6"

SEWER MAIN CLEANOUT
NO SCALE

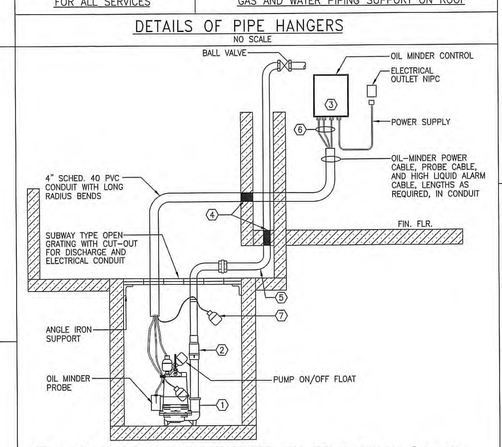

1. STANCOR MODEL SE–50 SUBMERSIBLE EFFLUENT PUMP, 1/2HP, 208V, 1PH, 3600 RPM, 2" DISCHARGE CONNECTION.
2. STANCOR CHECK VALVE
3. STANCOR OIL MINDER 115, 1PH, CONTROL SYSTEM WITH BUILT–IN AUDIBLE AND VISUAL ALARM WHEN PUMP DOES NOT RUN DUE TO OIL IN PIT OR HIGH LIQUID CONDITION. PROVIDE SILENCING BUTTON FOR AUDIBLE ALARM BUILT INTO PANEL. PANEL SHALL HAVE ADDITIONAL CONTACT FOR A REMOTE ALARM LOCATION.
4. WATERTIGHT SLEEVE.
5. ALL BURIED PUMP PRESSURE DISCHARGE PIPING SHALL BE PROTECTED WITH TAPECOAT CT CORROSION PROTECTION TAPE.
6. OIL MINDER POWER CABLE, PROBE CABLE, AND HIGH LIQUID ALARM CABLE.
7. HIGH LIQUID ALARM FLOAT WITH CLAMP DEVICE TO MOUNT TO PUMP DISCHARGE PIPING.

DETAIL OF TYPICAL ELEVATOR SUMP PUMP
NO SCALE

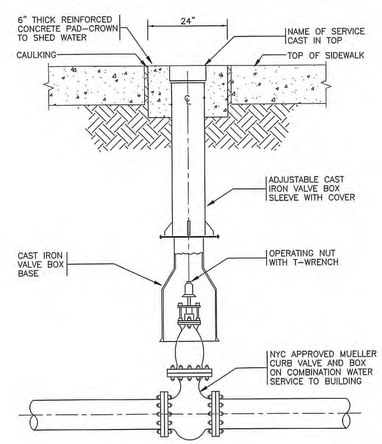

DETAIL OF CURB VALVE AND BOX
NO SCALE

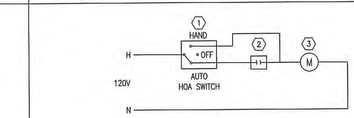

HWH CONTROL SYSTEM WIRING DIAGRAM
N.T.S.

1. CONTROL PANEL BY FRANKLIN CONTROL SYSTEM, ISS–1PH–RPL–50/K–50, 1PH, 120V, NEMA WITH HAND–OFF–AUTO SWITCH, PILOT LIGHT AND ELECTRICAL THERMAL OVERLOAD BY PLUMBING CONTRACTOR, INSTALLED AND WIRED BY ELECTRICAL CONTRACTOR.
2. AQUASTAT INSTALLED BY PLUMBING CONTRACTOR, WIRED BY ELECTRICAL CONTRACTOR.
3. INLINE RE–CIRCULATION PUMP INSTALLED BY PLUMBING CONTRACTOR, WIRED BY ELECTRICAL CONTRACTOR.
4. OVERLOAD PROTECTION PART OF CONTROL PANEL.

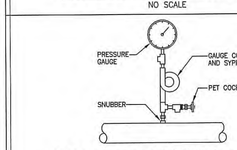

DETAIL OF PRESSURE GAUGE
NO SCALE

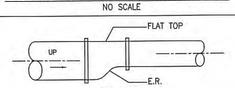

DETAIL OF ECCENTRIC COUPLING
NO SCALE

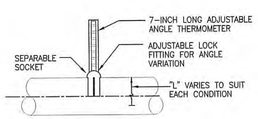

DETAIL OF THERMOMETER
NO SCALE

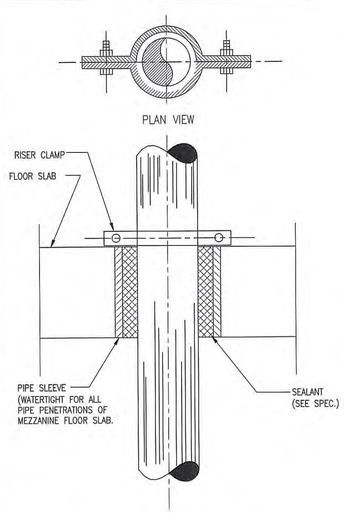

PIPE SLEEVE THRU FLOOR SLAB
N.T.S.

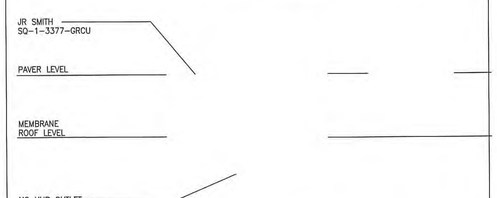

NOTES:
1. DUCCO CAST IRON BODY, PERFORATED STAINLESS STEEL EXTENSION WITH SECONDARY FLASHING CLAMP WITH ADJUSTABLE FLOW RATE CONTROL ASSEMBLY. GALVANIZED CAST IRON TOP FRAME AND HEAVY DUTY SECURED GRATE. UNDERDECK CLAMP SUMP RECEIVER, EXTENSION VANDALPROOF GRATE.
2. ROOF OPENING 17" DIA.
3. WR1

DETAIL OF PATIO AND TERRACE ROOF DRAIN
NO SCALE

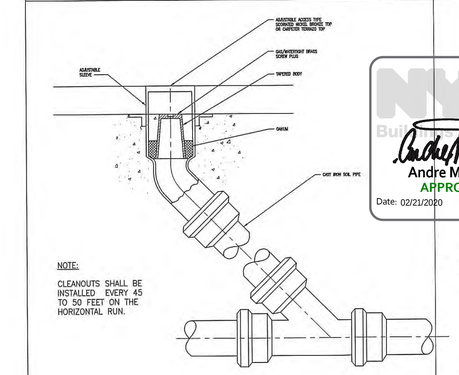

NOTE:

CLEANOUTS SHALL BE INSTALLED EVERY 45 TO 50 FEET ON THE HORIZONTAL RUN.

DETAIL OF FLOOR CLEANOUT
N.T.S.

OWNER

ESSEN MEDICAL CENTER
2015 GRAND CONCOURSE, BRONX NEW YORK, 10453

PROJECT NAME

ESSEN MEDICAL CENTER
899 ELTON AVENUE, BRONX, NEW YORK 10451

REV.	DATE	DESCRIPTION
01	12/20/2019	ISSUED FOR OWNER / DOB APPROVAL

ARCHITECT

PARAB ASSOCIATES ARCHITECTS AND PLANNERS
188 BOULDER RIDGE RD. SCARSDALE, NY 10583
TEL:914-954-1522

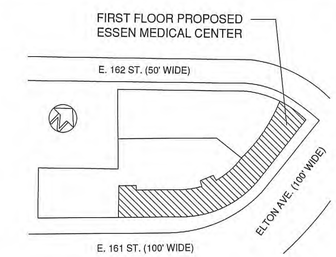

KEY PLAN N.T.S.

Andre Meredith
APPROVED
Date: 02/21/2020

BLOCK: 2343 LOT: 7501 CB: 203 BIN# 2127429

ESSEN MEDICAL CENTER
899 ELTON AVENUE, BRONX, NEW YORK 10451

Drawing Title

PLUMBING DETAILS
SHEET 2

SEAL & SIGNATURE

REGISTERED ARCHITECT VILAS PARAB 014767 STATE OF NEW YORK

Date: 08/25/2017
Project No.:
Drawn by:
Checked by
DWG No.: P-004.00
CAD FILE No.:
4 OF 7

DOB Project Number

LAST SAVED: Tue, 28 Jan 2020 – 10:13am

E:\0 trabajos\899 ELTON AVENUE, BRONX, NEW TORK 10451\DWG\A–014.00 RISER DIAGRAM OLD.dwg

Xref .\XREF TTBLOCK 3RD AVE..dwg

FIXTURE SCHEDULE					
LOCATION	WC	LAV	SINK	FD	DF
INFUSION	1	1	4		
URGENT CARE	2	2	5		
REGIST. WAITING	2	2			1
PRIMARY CARE	2	2	8		
JAN. ROOM	1	1	1	1	
PHYSICAL THERAPY	1	1	1		
HWH RM				1	
PHLEBOTOMY	1	1	2		
X-RAY	1	1	1		
TOTAL	11	11	22	2	1

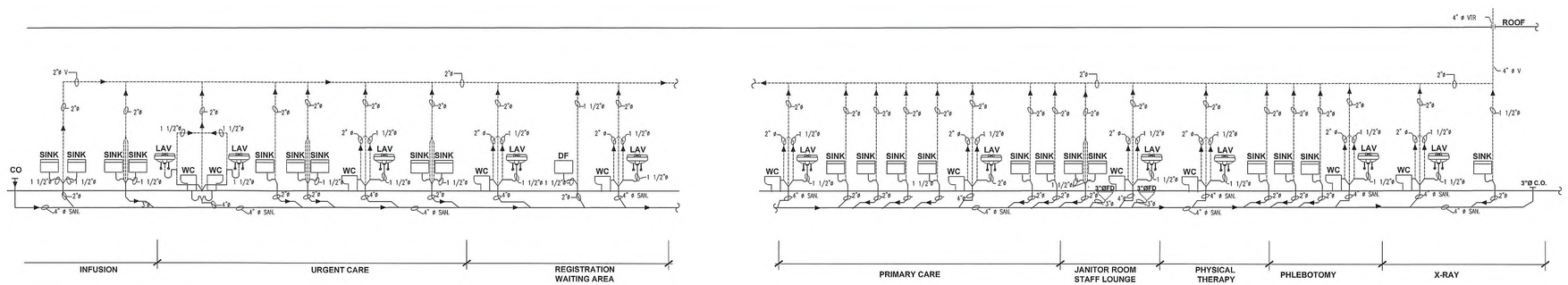

PLUMBING / SANITARY RISER DIAGRAM

SCALE: NTS

OWNER

ESSEN MEDICAL CENTER

2015 GRAND CONCOURSE, BRONX NEW YORK, 10453

PROJECT NAME

ESSEN MEDICAL CENTER

899 ELTON AVENUE, BRONX, NEW YORK 10451

REV.	DATE	DESCRIPTION
01	12/20/2019	ISSUED FOR OWNER / DOB APPROVAL

ARCHITECT

PARAB ASSOCIATES
ARCHITECTS AND PLANNERS

188 BOULDER RIDGE RD. SCARSDALE, NY 10583
TEL:914-954-1522

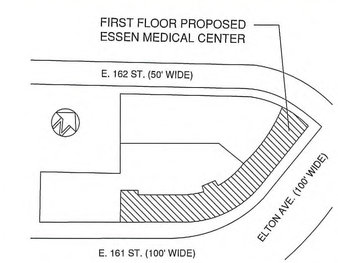

KEY PLAN N.T.S.

NYC Building
Andre Meredith
APPROVED
Date: 02/21/2020

BLOCK: 2503 LOT: 7501 CB: 203 BIN# 2127429

ESSEN MEDICAL CENTER

899 ELTON AVENUE, BRONX, NEW YORK 10451

Drawing Title

FIRST FLOOR PLUMBING SANITARY, RISER DIAGRAM

SEAL & SIGNATURE

REGISTERED ARCHITECT VILAS PARAB 014767 STATE OF NEW YORK

Date: 08/25/2017

Project No.:

Drawn by:

Checked by

DWG No.: **P-005.00**

CAD FILE No.:

5 OF 7

DOB Project Number

LAST SAVED: Tue, 28 Jan 2020 – 1:16pm

E:\0 trabajos\899 ELTON AVENUE, BRONX, NEW TORK 10451\DWG\A-014.00 RISER DIAGRAM.dwg

FIRST FLOOR SANITARY PLAN

SCALE: 1/8"= 1'-0"

LEGEND:

—— S ——	SANITARY PIPING
—— W ——	WASTE PIPING
—— V ——	VENT PIPING
—— O-C —— FD	FLOOR DRAIN
WC	WATER CLOSET
LAV	LAVATORY
S	SINK
CO	CLEAN OUT

OWNER

ESSEN MEDICAL CENTER

2015 GRAND CONCOURSE, BRONX NEW YORK, 10453

PROJECT NAME

ESSEN MEDICAL CENTER

899 ELTON AVENUE, BRONX, NEW YORK 10451

REV.	DATE	DESCRIPTION
01	12/20/2019	ISSUED FOR OWNER / DOB APPROVAL

ARCHITECT

PARAB ASSOCIATES ARCHITECTS AND PLANNERS

188 BOULDER RIDGE RD. SCARSDALE, NY 10583

TEL:914-954-1522

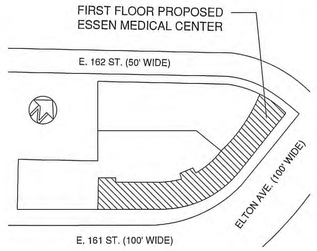

KEY PLAN N.T.S.

Andre Meredith
APPROVED
Date: 02/21/2020

BLOCK: 2368 LOT: 7501 CB: 203 BIN# 2127429

ESSEN MEDICAL CENTER

899 ELTON AVENUE, BRONX, NEW YORK 10451

Drawing Title

FIRST FLOOR SANITARY, VENT AND WASTE PIPING

SEAL & SIGNATURE

REGISTERED ARCHITECT ELIAS PARAB 014767 STATE OF NEW YORK

Date: 08/25/2017

Project No.:

Drawn by:

Checked by

DWG No.: P-006.00

CAD FILE No.:

6 OF 7

DOB Project Number

LAST SAVED: Tue, 28 Jan 2020 – 1:16pm

E:\0 trabajos\899 ELTON AVENUE, BRONX, NEW TORK 10451\DWG\A-014.00 RISER DIAGRAM.dwg

LEGEND:

CW ---------- COLD WATER PIPING
HW ---------- HOT WATER PIPING
HWR ---------- HOT WATER RECIRCULATION PIPING

1"Ø CW SUPPLY DN TO TOILET FLUSHAMETER
1/2"Ø CW SUPPLY DN TO LAVATORY FLUSHAMETER
1/2"Ø HW SUPPLY DN TO LAVATORY FLUSHAMETER
TYP.

1/2"Ø CW WITH SHUT-OFF VALVE
1/2"Ø HW WITH SHUT-OFF VALVE
TYP.

NOTE:

1) ALL TOILET WILL HAVE FLUSHOMETER WITH 1" Ø CW CONNECTION WITH SHUT OFF BALL VALVE.

2) ALL SINK AND LAVATORY WILL HAVE 1/2" Ø COLD WATER AND 1/2" Ø HOT WATER CONNECTION WITH SHUT OFF BALL VALVE. INCLUDING MIXING VALVE AND AUTO SENSER FAUCET FOR ENERGY

HOT WATER HEATER DETAIL "A"

SCALE: NTS

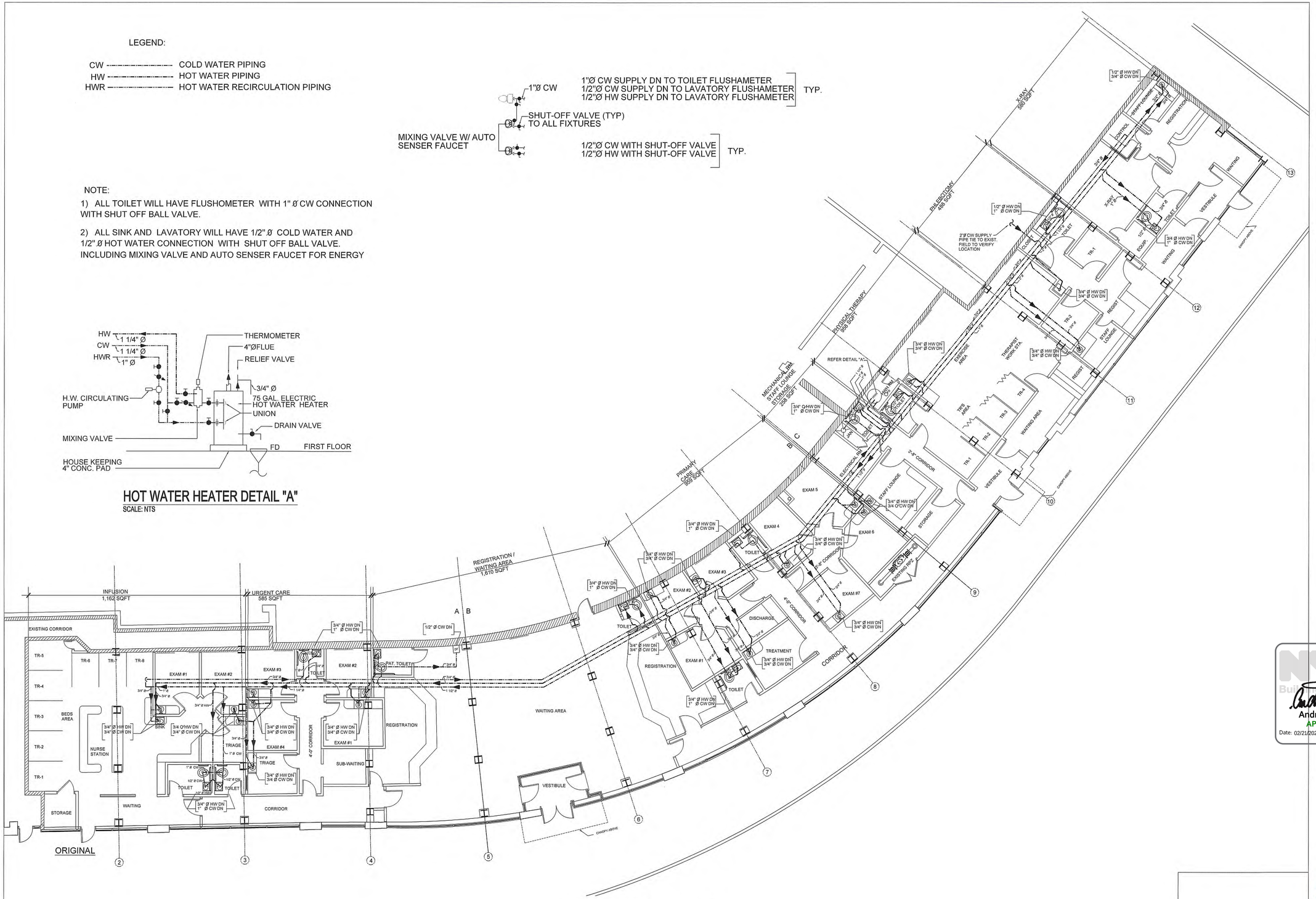

ORIGINAL

COLD AND HOT WATER PLAN

SCALE: 1/8"= 1'-0"

OWNER

ESSEN MEDICAL CENTER
2015 GRAND CONCOURSE, BRONX NEW YORK, 10453

PROJECT NAME

ESSEN MEDICAL CENTER
899 ELTON AVENUE, BRONX, NEW YORK 10451

REV.	DATE	DESCRIPTION
01	12/20/2019	ISSUED FOR OWNER / DOB APPROVAL

ARCHITECT

PARAB ASSOCIATES
ARCHITECTS AND PLANNERS
188 BOULDER RIDGE RD. SCARSDALE, NY 10583
TEL:914-954-1522

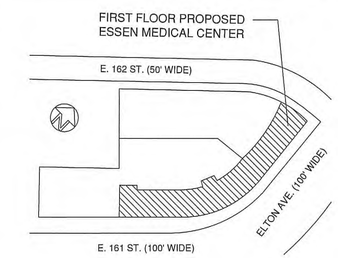

KEY PLAN N.T.S.

Andre Meredith
APPROVED
Date: 02/21/2020

LOT: 7501 CB: 203 BIN# 2127429

ESSEN MEDICAL CENTER
899 ELTON AVENUE, BRONX, NEW YORK 10451

Drawing Title

PLUMBING
COLD AND HOT WATER

SEAL & SIGNATURE

REGISTERED ARCHITECT VILAS PARAB 014767 STATE OF NEW YORK

Date: 08/25/2017
Project No.:
Drawn by:
Checked by
DWG No.: P-007.00
CAD FILE No.:
7 OF 7

DOB Project Number

LAST SAVED: Tue, 28 Jan 2020 – 1:16pm

E:\0 trabajos\899 ELTON AVENUE, BRONX, NEW TORK 10451\DWG\A-014.00 RISER DIAGRAM.dwg

APPENDIX B
SUB-SLAB DEPRESSURIZATION SYSTEM AS-BUILT DRAWINGS

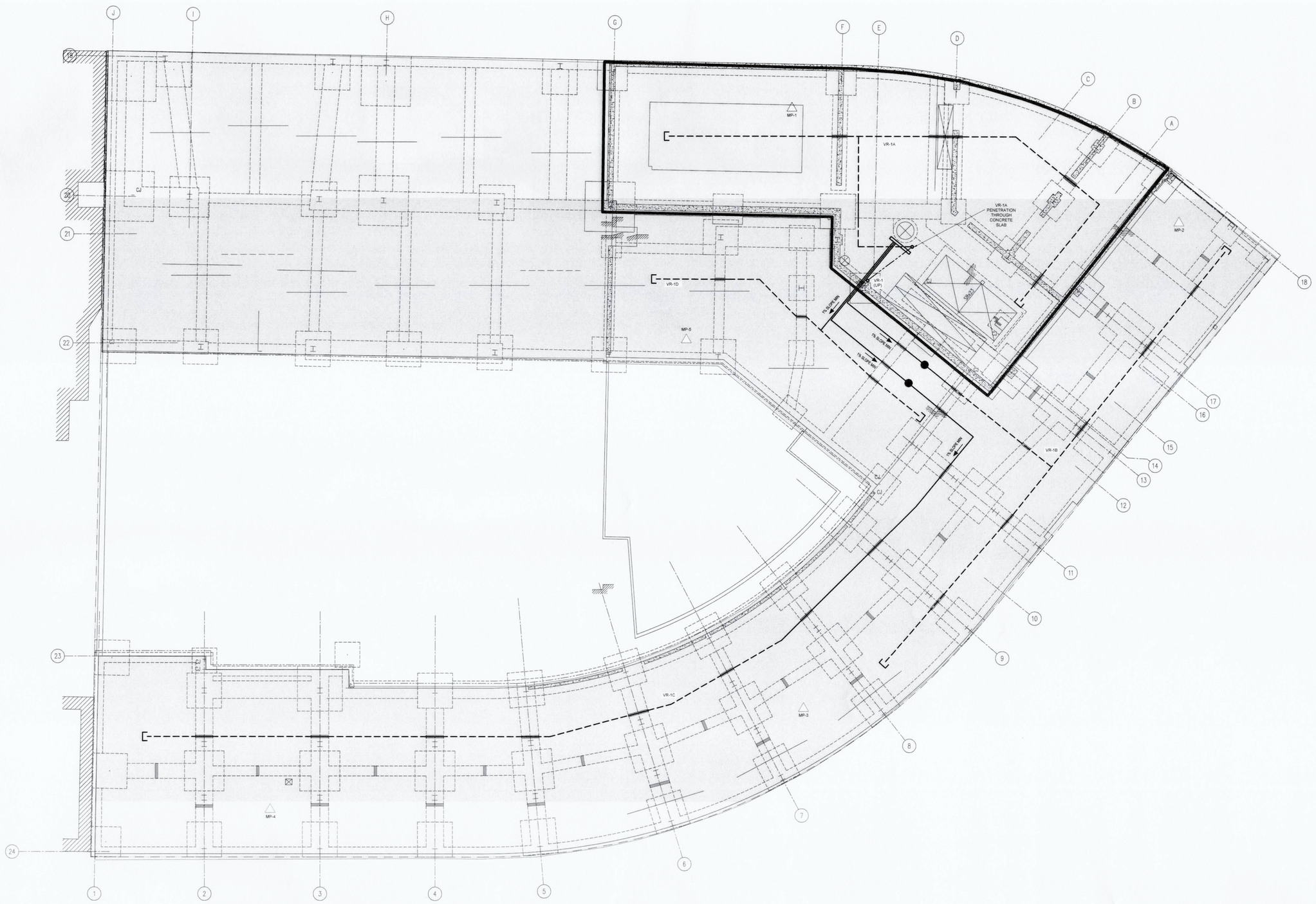

LEGEND

- LATERAL EXTENT OF GAS VAPOR BARRIER AND 6-INCH TO 4-FOOT THICK GAS PERMEABLE AGGREGATE (SEE DETAILS ON DRAWING ENV-101)
- VR-1 — VERTICAL RISER AND IDENTIFICATION NUMBER EXTENDING TO ROOF WITH EXHAUST STACK (SEE DETAIL 2 ON ENV-103)
- 4-INCH DIAMETER SCHEDULE 40 0.02-INCH SLOTTED PVC SSDS PIPE BENEATH FLOOR SLAB WITH END CAP (SEE DETAILS 2 AND 7 ON DRAWING ENV-101)
- 4-INCH DIAMETER SCHEDULE 40 SOLID PVC SSDS PIPE BENEATH FLOOR SLAB
- 4-INCH DIAMETER SCHEDULE 40 SOLID PVC SSDS PIPE ABOVE FLOOR SLAB
- MANIFOLD
- EXTENT OF PARTIAL CELLAR
- MP-1 — MONITORING POINT (SEE DETAIL 4 ON DRAWING ENV-101)
- PIPE SLEEVE (SEE DETAIL 9 ON DRAWING ENV-101)
- COMMUNICATION SLEEVE (SEE DETAIL 11 ON DRAWING ENV-101)
- CONDENSATE DRAIN (SEE DETAIL 5 ON ENV-101)
- CONCRETE FOUNDATION ELEMENT

NOTE

1. SOLID HORIZONTAL 4-INCH SCHEDULE 40 PVC PIPE SLOPED MINIMUM 1% UNIFORMLY TOWARDS THE SSDS SLOTTED PIPING OR CONDENSATE DRAIN.

0 10 20
SCALE: 1" = 10'

OWNER

ELTON CROSSING HOUSING DEVELOPMENT FUND CORP.
902 BROADWAY, 13TH FLOOR
NEW YORK, NY 10010

ENVIRONMENTAL ENGINEER

AKRF
440 PARK AVENUE SOUTH
NEW YORK, NY 10016
(212) 696-0670 (PHONE)
(212) 726-0942 (FAX)

STATE OF NEW YORK · MICHELLE LAPIN · No. 073932 · LICENSED PROFESSIONAL ENGINEER

MICHELLE LAPIN , P.E.

REVISIONS

No.	DATE	DESCRIPTION
	05/04/2015	DEC SUBMISSION
	06/12/2015	DEC REVISIONS
	06/24/2015	DESIGN REVISIONS
	07/16/2015	100% CD
	10/07/2016	AS BUILT EDITS
	05/22/2018	AS BUILT EDITS
	08/06/2018	2018 PRR

PROJECT
ELTON CROSSING
(MELROSE C FAMILY)
BRONX, NEW YORK

DRAWN BY	CHECKED BY
MRV	ML
SCALE	DATE
AS NOTED	05/22/18

SHEET TITLE
UNDERGROUND SUB-SLAB DEPRESSURIZATION LAYOUT

SHEET NO.
ENV-100

SHEET 1 OF 4

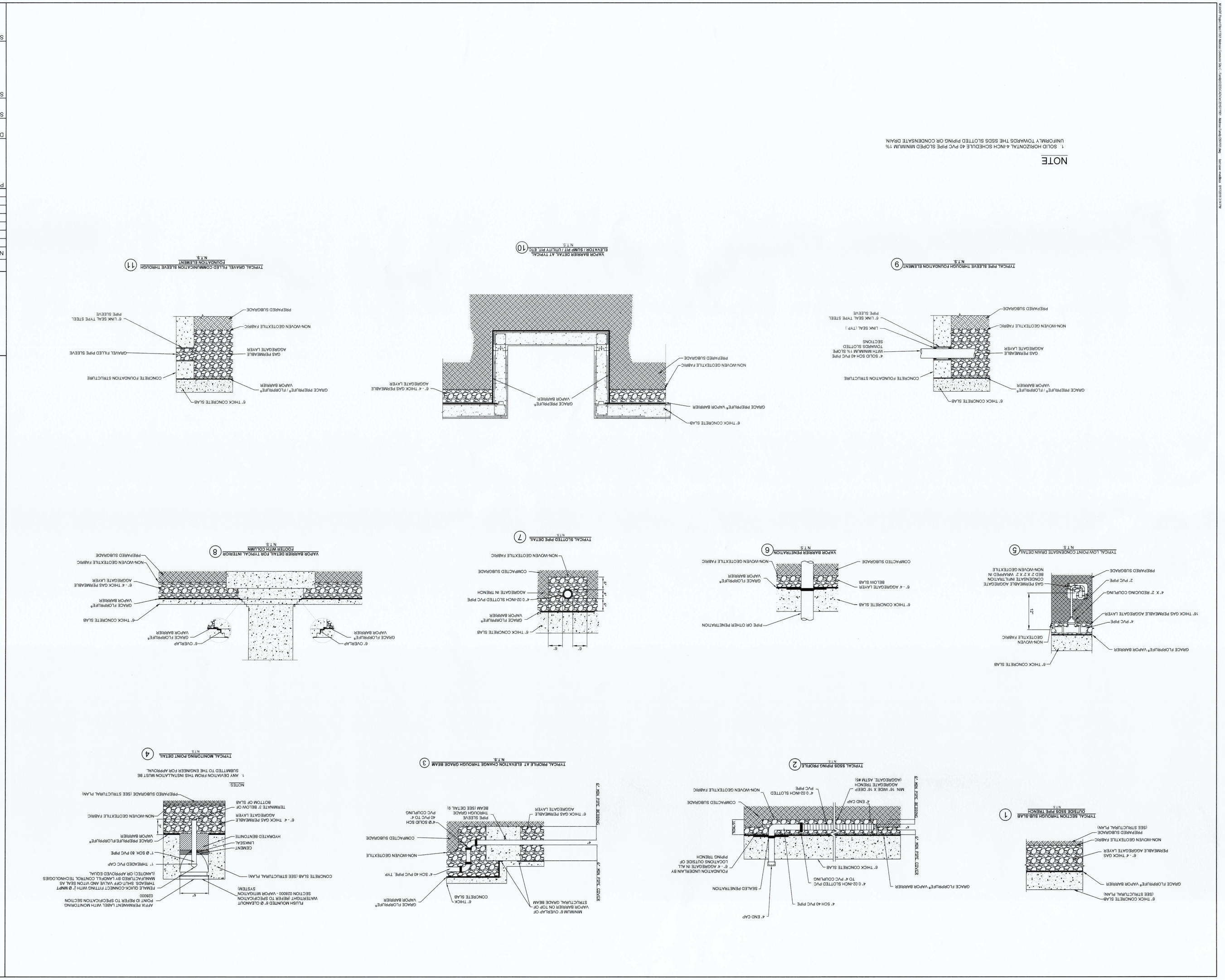

OWNER

ELTON CROSSING HOUSING DEVELOPMENT FUND CORP.
902 BROADWAY, 13TH FLOOR
NEW YORK, NY 10010

ENVIRONMENTAL ENGINEER

AKRF

440 PARK AVENUE SOUTH
NEW YORK, NY 10016
(212) 696-0670 (PHONE)
(212) 726-0942 (FAX)

STATE OF NEW YORK
MICHELLE LAPIN
083134
LICENSED PROFESSIONAL ENGINEER

MICHELLE LAPIN, P.E.

REVISIONS

No.	DATE	DESCRIPTION
	05/04/2015	DEC SUBMISSION
	06/12/2015	DEC REVISIONS
	06/24/2015	DESIGN REVISIONS
	07/16/2015	100% CD
	10/07/2016	AS BUILT EDITS
	05/22/2018	AS BUILT EDITS
	08/06/2018	2018 PRR

PROJECT

ELTON CROSSING
(MELROSE C FAMILY)
BRONX, NEW YORK

DRAWN BY	CHECKED BY
MRV	ML
SCALE	DATE
AS NOTED	05/22/18

SHEET TITLE

UNDERGROUND
SUB-SLAB
DEPRESSURIZATION
LAYOUT

SHEET NO.

ENV-101

SHEET 2 OF 4

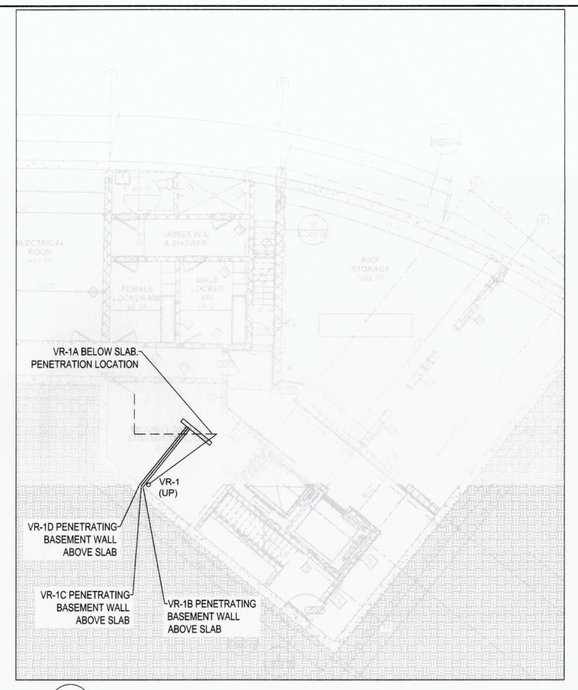

1. VR-1 CELLAR HEADER AND RISER LOCATION PLAN

A-100 USED AS BACKGROUND

0 10' 20'

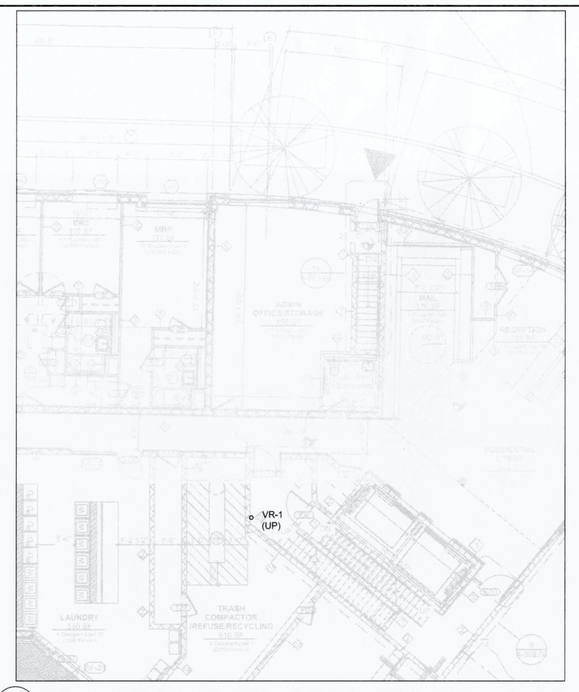

2. VR-1 FIRST FLOOR RISER LOCATION PLAN

A-100 USED AS BACKGROUND

0 10' 20'

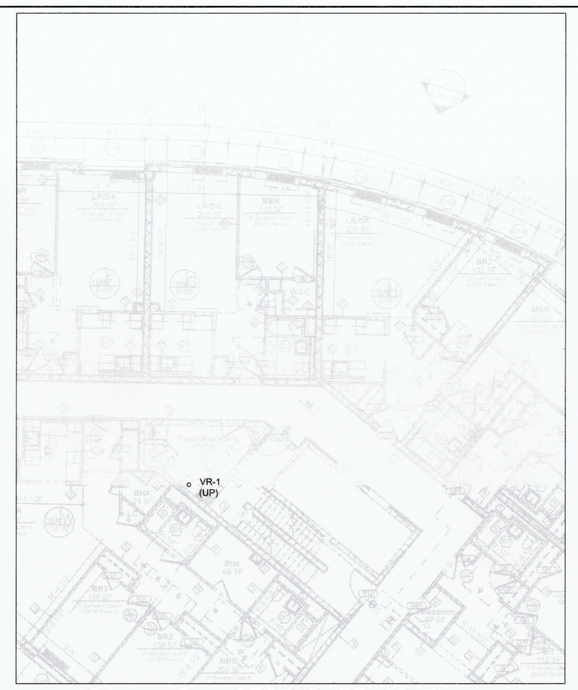

3. VR-1 SECOND TO SIXTH FLOOR RISER LOCATION PLAN

A-102 AS BACKGROUND

0 10' 20'

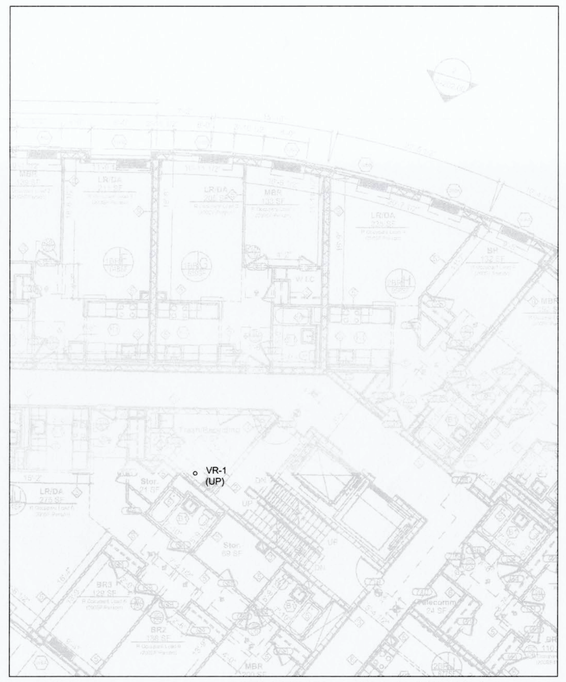

4. VR-1 SEVENTH TO EIGHTH FLOOR RISER LOCATION PLAN

A-103 USED AS BACKGROUND

0 10' 20'

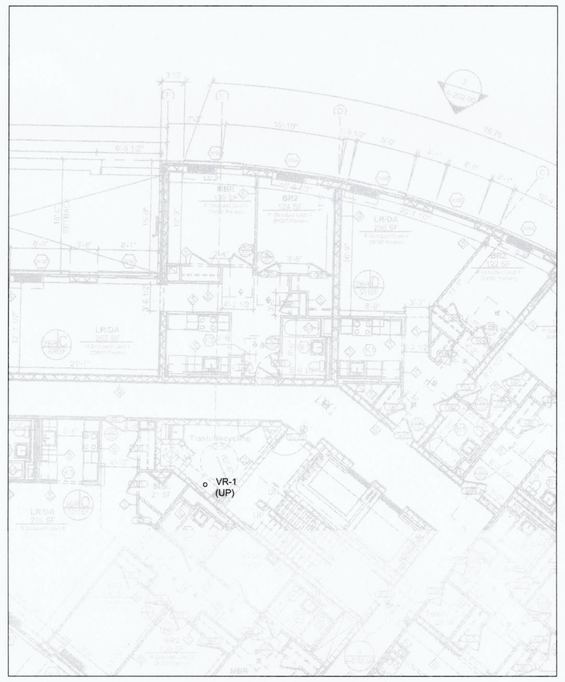

5. VR-1 NINTH TO TENTH FLOOR RISER LOCATION PLAN

A-104 USED AS BACKGROUND

0 10' 20'

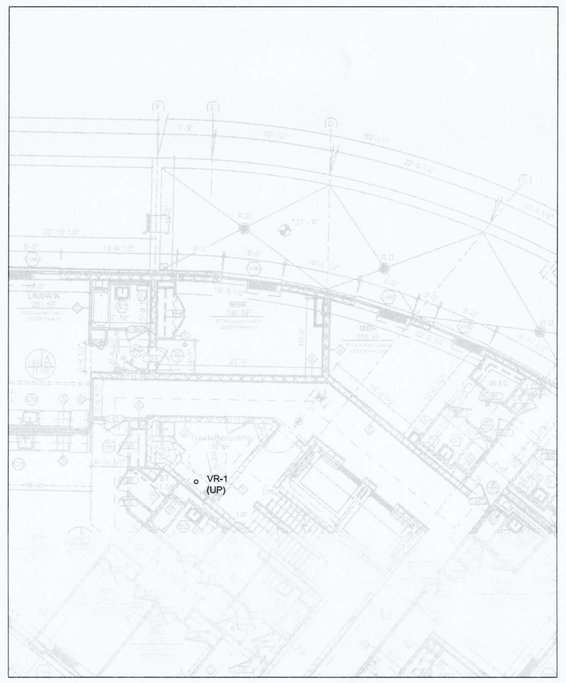

6. VR-1 ELEVENTH TO TWELFTH FLOOR RISER LOCATION PLAN

A-105 USED AS BACKGROUND

0 10' 20'

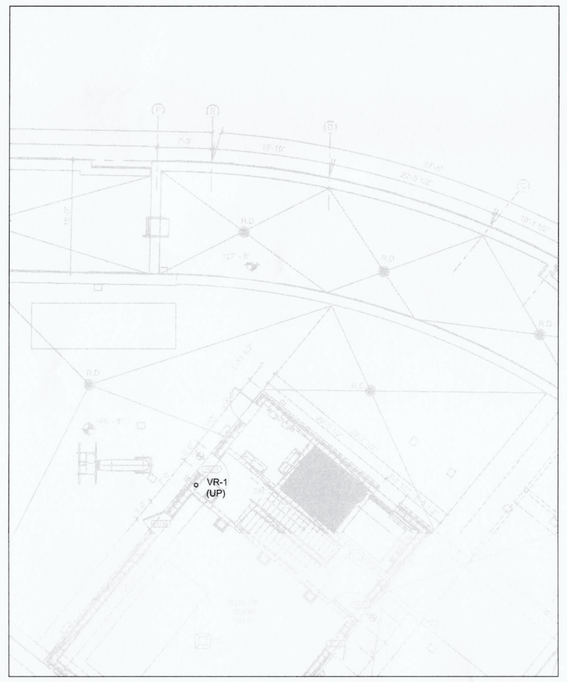

7. VR-1 ROOF RISER LOCATION PLAN

A-106 USED AS BACKGROUND

0 10' 20'

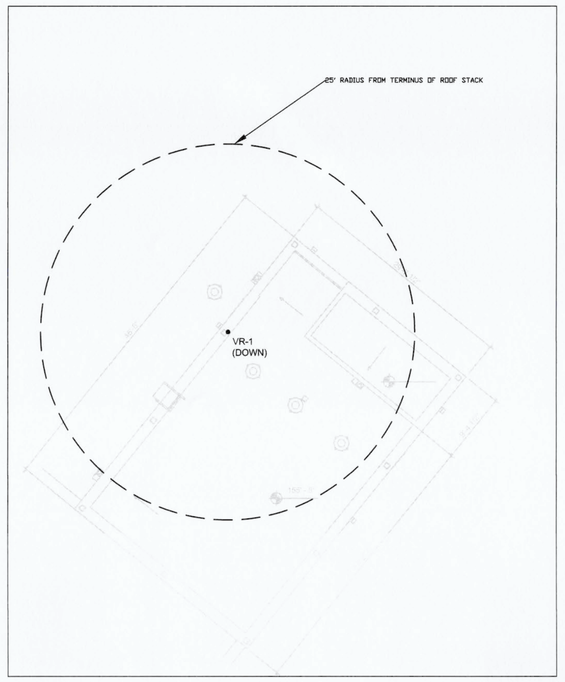

8. VR-1 HIGH ALBEDO ROOF OVER BULKHEAD/MECHANICAL ROOM LOCATION PLAN

A-106 USED AS BACKROUND

0 10' 20'

LEGEND

○ (UP) ● (DOWN) VR-1 — VERTICAL RISER AND IDENTIFICATION NUMBER. EXTEND THROUGH ROOF TO SUCTION FAN (REFER TO DETAIL 2 ON ENV-103) (NOT TO SCALE)

NOTES

1. THIS DRAWING IS FOR THE SUB-SLAB DEPRESSURIZATION SYSTEM ONLY. THIS PLAN IS NOT TO BE USED FOR STRUCTURAL, ARCHITECTURAL OR OTHER PURPOSES.
2. REFER TO DRAWINGS ENV-101 AND ENV-103 FOR SYSTEM LAYOUT, VENT PIPE, RISER PIPE, EXHAUST STACK DETAILS.
3. REFER TO DRAWING ENV-103 FOR FAN AND INSTRUMENT SCHEDULE, TYPICAL SSDS CROSS SECTION, GENERAL NOTES, AND BLOWER NOTES.
4. ALL SOLID PVC HORIZONTAL PIPE RUNS (ABOVE GROUND AND UNDERGROUND) MUST BE PITCHED A MINIMUM OF 1/8-INCH VERTICAL PER FOOT HORIZONTAL (1% SLOPE) TOWARDS SLOTTED PVC PIPE OR TO CONDENSATE DRAIN WITHIN THE SUB-SLAB WHEN UNDERGROUND PIPING CANNOT BE SLOPED TOWARDS PIT. THE SYSTEM SHALL BE INSTALLED SUCH THAT NO PORTION WILL ALLOW EXCESS ACCUMULATION OF CONDENSATION.
5. CONTRACTOR TO VERIFY THAT VENT STACKS EXHAUST LOCATIONS ARE A DISTANCE OF 25 FEET OR MORE FROM ANY AIR INLETS AND OPERABLE WINDOWS (INCLUDING NEIGHBORING PROPERTIES) AND THAT FINAL HEIGHT AND LOCATION OF VENT STACKS ARE IN ACCORDANCE WITH NYC BUILDING CODE.
6. CONTRACTOR SHALL SUBMIT SHOP DRAWINGS OF EQUIPMENT, DUCTWORK, AND RAIL LOCATIONS AND/OR PROPOSED MOUNTING FOR APPROVAL BEFORE CONSTRUCTION.
7. FIRE STOPPING WAS INSTALLED AT PIPE PENETRATIONS IN ACCORDANCE WITH NYC BUILDING CODE.
8. SSDS RISERS SHALL NOT BE INSTALLED IN A SHAFT CONTAINING DUCTS CONVEYING ENVIRONMENTAL AIR.
9. BASE MAP TAKEN FROM DRAWINGS A-100 THROUGH A-106 DATED 03/18/2015 PREPARED BY MAGNUSSON ARCHITECTURE &PLANNING PC .

CODE COMPLIANCE NOTES:

1. THE SUB-SLAB DEPRESSURIZATION SYSTEM COMPLIES WITH THE REQUIREMENTS OF THE 2008 NYC MECHANICAL CODE SECTION 512, "SUBSLAB SOIL EXHAUST SYSTEMS."
2. THE SUB-SLAB DEPRESSURIZATON SYSTEM IS NOT A "HAZARDOUS EXHAUST SYSTEM" AS DEFINED IN THE 2008 NYC MECHANICAL CODE SECTION 510.
3. 2008 NYC MECHANICAL CODE CHAPTER 6, "DUCT SYSTEMS", PARAGRAPH 601.3, "CONTAMINATION PREVENTION" DOES NOT APPLY TO THE SUB-SLAB DEPRESSURIZATION RISERS, WHICH ARE NOT UNDER PRESSURE.
4. 2008 NYC MECHANICAL CODE CHAPTER 6, "DUCT SYSTEMS", PARAGRAPH 607.5.5.2, "LIMITATIONS" DOES NOT APPLY TO THE SUB-SLAB DEPRESSURIZATION SYSTEM RISERS; HOWEVER, THE DESIGN DOES NOT ALLOW FOR INSTALLATION OF SSDS RISERS IN SHAFTS THAT CONTAIN DUCTWORK CONVEYING ENVIRONMENTAL AIR.

OWNER

ELTON CROSSING HOUSING DEVELOPMENT FUND CORP.
902 BROADWAY, 13TH FLOOR
NEW YORK, NY 10010

ENVIRONMENTAL ENGINEER

AKRF
440 PARK AVENUE SOUTH
NEW YORK, NY 10016
(212) 696-0670 (PHONE)
(212) 726-0942 (FAX)

STATE OF NEW YORK · MICHELLE LAPIN · No. 073924 · LICENSED PROFESSIONAL ENGINEER

MICHELLE LAPIN , P.E.

REVISIONS

No.	DATE	DESCRIPTION
	05/04/2015	DEC SUBMISSION
	06/12/2015	DEC REVISIONS
	06/24/2015	DESIGN REVISIONS
	07/16/2015	100% CD
	10/07/2016	AS BUILT EDITS
	11/04/2016	SMP/FER SUBMISSION
	08/08/2018	2018 PRR

PROJECT

ELTON CROSSING
(MELROSE C FAMILY)
BRONX, NEW YORK

DRAWN BY	CHECKED BY
KH	MG
SCALE	DATE
AS NOTED	06/24/15

SHEET TITLE

SSDS PLAN
RISER PLAN 1

SHEET NO.

ENV-102

SHEET 3 OF 4

M:\AKRF Project Files\11767 Melrose Commons Site C - Family\SSDS\CAD\ICA\ICA 2015\11767_Melrose Family SSDS\ICA S SSD.dwg Set name: modelspace 8/17/2015 3:17 PM

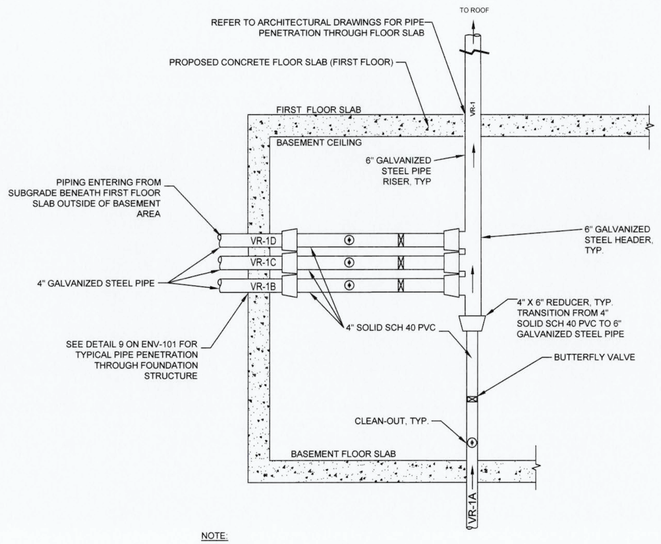

NOTE:

1. ALL HORIZONTAL PIPE RUNS (ABOVE GROUND AND UNDERGROUND) ARE PITCHED A MINIMUM OF 1/8-INCH VERTICAL PER FOOT HORIZONTAL (1% SLOPE) TOWARDS EACH SLOTTED VENTING PIPE OR TO CONDENSATE SUMP WITHIN THE SUB-SLAB WHEN UNDERGROUND PIPING COULD NOT BE SLOPED TOWARDS THE SLOTTED PIPES. THE SYSTEM WAS INSTALLED SUCH THAT NO PORTION WILL ALLOW EXCESS ACCUMULATION OF CONDENSATION.

1 **PIPING MANIFOLD DIAGRAM**
N.T.S.

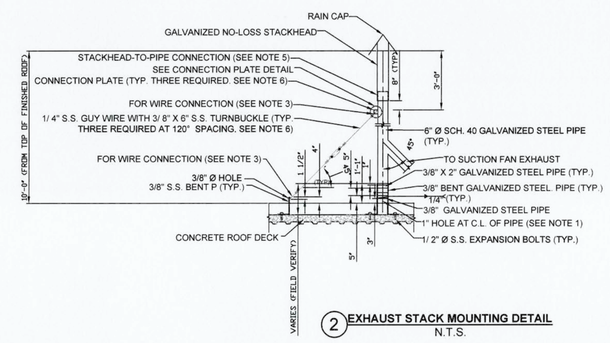

2 **EXHAUST STACK MOUNTING DETAIL**
N.T.S.

NOTES:

1. PROVIDE PITCH POCKET IN PLATE FOR DRAINAGE.
2. ADJUST DIMENSIONS TO PROVIDE A TIGHT FIT BETWEEN THE PIPE AND THE BEND.
3. 1/4" S.S. GUY WIRE SHALL BE LOOPED THROUGH THE 3/8" Ø HOLES AT THE TOP AND BOTTOM CONNECTION PLATES AND THROUGH THE EYE AT EACH END OF THE TURNBUCKLE. EACH CONNECTION SHALL BE SECURED BY TWO 1/ 4" S.S. WIRE ROPE CLAMPS.
4. ALL PLATES, GUY WIRES, TURNBUCKLES, AND CLIPS ARE ASTM G304 STAINLESS STEEL.
5. RISER PIPE IS GALVANIZED STEEL. REFER TO SPECIFICATION 0 28 000. VAPOR MITIGATION SYSTEM.
6. PROVIDE CONNECTION PER MANUFACTURER'S RECOMMENDATION OR USE (6) 1/4" ASTM G304 STAINLESS STEEL MACHINE SCREWS, DRILL AND TAP AS REQUIRED.
7. THREE GUY WIRE/CONNECTION PLATES ARE TO BE USED SPACED EVENLY AROUND THE CIRCUMFERENCE OF THE PIPE (120° SPACING).
8. PROVIDE LIGHTNING ROD AND GROUNDING WIRE AS PER ELECTRICAL REQUIREMENTS.
9. COORDINATE ALL ROOF PENETRATIONS FOR FAN SUPPORT WITH OTHER TRADES.

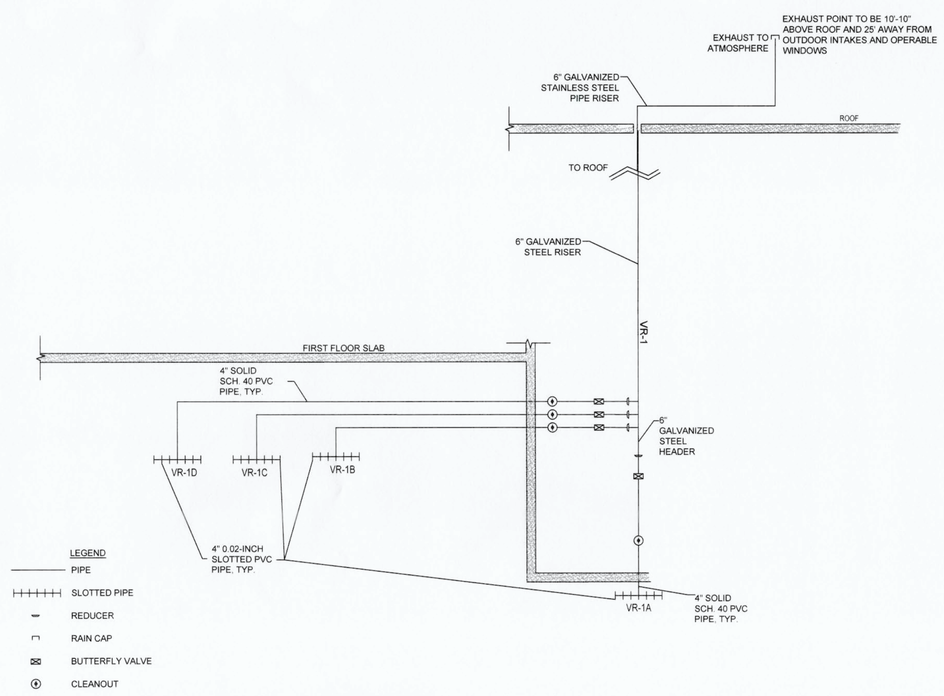

3 **PROCESS FLOW DIAGRAM**
N.T.S.

GENERAL NOTES:

1. DRAWING SHALL BE USED FOR SUB-SLAB DEPRESSURIZATION SYSTEM ONLY.

2. DESIGN DETAILS AND DRAWINGS ARE ADAPTED FROM EPA DOCUMENT EPA/625/R-92/016.

3. SYSTEM INSTALLATION ADHERES TO: OCTOBER 2006 FINAL GUIDANCE FOR EVALUATING SOIL VAPOR INTRUSION IN THE STATE OF NEW YORK PREPARED BY NEW YORK STATE DEPARTMENT OF HEALTH (NYSDOH). ALL APPLICABLE PORTIONS OF THE BUILDING CODE OF THE CITY OF NEW YORK, INCLUDING BUT NOT LIMITED TO 2008 NEW YORK CITY MECHANICAL CODE, CHAPTER 5, SECTION MC 512-SUBSLAB EXHAUST SYSTEMS, AS SUCH, POINT OF EXHAUST IS:
   - AT LEAST 10 FEET ABOVE ROOF.
   - AT LEAST 25 FEET FROM ANY ADJOINING OR ADJACENT BUILDINGS, OPERABLE WINDOWS, HVAC INTAKES, SUPPLY REGISTERS, OR ANY OTHER AIR INLETS.

4. VENT AND RISER PIPING INSTALLED IN ACCORDANCE WITH THE NEW YORK CITY PLUMBING CODE, INCLUDING, BUT NOT LIMITED TO, THOSE REQUIREMENTS PERTAINING TO:
   - PROTECTION OF SYSTEM COMPONENTS
   - TRENCHING, EXCAVATION, AND BACKFILL
   - STRUCTURAL SAFETY
   - PIPING SUPPORT
   - JOINTS

6. REFER TO DRAWINGS ENV-100, ENV-101 AND ENV-102 FOR SSDS PIPING LAYOUT, RISER, GAS VAPOR BARRIER AND GAS PERMEABLE AGGREGATE DETAILS AND SECTIONS.

OWNER

ELTON CROSSING HOUSING DEVELOPMENT FUND CORP.
902 BROADWAY, 13TH FLOOR
NEW YORK, NY 10010

ENVIRONMENTAL ENGINEER

AKRF
440 PARK AVENUE SOUTH
NEW YORK, NY 10016
(212) 696-0670 (PHONE)
(212) 726-0942 (FAX)

STATE OF NEW YORK · MICHELLE LAPIN · 110 073934 · LICENSED PROFESSIONAL ENGINEER
MICHELLE LAPIN , P.E.

REVISIONS

No.	DATE	DESCRIPTION
	05/04/2015	DEC SUBMISSION
	06/12/2015	DEC REVISIONS
	06/24/2015	DESIGN REVISIONS
	07/16/2015	100% CD
	10/07/2016	AS BUILT EDITS
	11/04/2016	SMP/FER SUBMISSION
	08/06/2018	2018 PRR

PROJECT

ELTON CROSSING
(MELROSE C FAMILY)
BRONX, NEW YORK

DRAWN BY	CHECKED BY
KH	MG
SCALE	DATE
AS NOTED	06/24/15

SHEET TITLE

SSDS EQUIPMENT SCHEDULE AND DETAILS

SHEET NO.

ENV-103

M:\AKRF Project Files\11951 Melrose Commons Site C - Family\GIS\CAD\ACA 2015\11951 - Melrose Family ENV102 & 103.dwg last user: mwilkins 8/17/2018 3:19 PM

APPENDIX C
SITE-WIDE INSPECTION LOG

ANNUAL SITE-WIDE INSPECTION LOG

Overview of Annual Site-Wide Inspection requirements:

1) General Site Conditions at Time of Inspection;

2) Site Cover System Inspection;

3) Any Site Activities Currently Being Conducted;

4) Last Site Management Plan (SMP)-Related Site Activity Conducted, Upcoming SMP-Related Tasks;

5) Institutional Control (IC) Checklist [SMP, Excavation Work Plan (EWP) maintained on-site, routine SMP tasks being conducted];

6) Evaluation of Engineering Controls (ECs) (in office); and

7) Site Documentation.

---

1) General Site Conditions at Time of Inspection:

NAME: **MARCO BALLETTA, ANNA BROOKS, AKRF**	DATE: **04/11/2023**
TIME: **11:45**	WEATHER: **46-70°F, CLEAR, SUNNY**
Annual Inspection or Emergency Inspection (if emergency, specify nature)? **ANNUAL INSPECTION**	

Note: None

2) Site Cover System Inspection

SITE COVER SYSTEM INSPECTION OCCURRED CONCURENTLY WITH THE SITE-WIDE INSPECTION. NO SIGNIFICANT ISSUES WERE NOTED DURING THE INSPECTION. SEE THE SITE COVER SYSTEM INSPECTION FORM (APPENDIX D) FOR SPECIFIC DETAILS.

3) Any SMP-Related Site Activities Currently Being Conducted

SUB-SLAB DEPRESSURIZATION SYSTEM (SSDS) WAS CONNECTED AND PASSIVE VENTING OF SUB-SLAB SOIL VAPOR WAS OCCURRING. SOIL VAPOR WAS DISCHARGED VIA THE SSDS STACK ABOVE THE SITE BUILDING ROOF. THE SITE COMPOSITE COVER SYSTEM REMAINS IN-PLACE AND EFFECTIVE.

4) Last SMP-Related Site Activity Conducted, Next SMP-Related Task

NO ON SITE ACTIVITIES WERE CONDUCTED SINCE THE LAST ANNUAL SITE VISIT. ROUTINE INSPECTION, MAINTENANCE, AND MONITORING OF THE SITE COVER SYSTEM AND PASSIVE SSDS WILL CONTINUE TO OCCUR IN ACCORDANCE WITH THE SMP.

5) Institutional Control (IC) Checklist (SMP, EWP Maintained On-Site, Routine SMP Tasks Being Conducted)

Copy of SMP on-site: YES

Copy of EWP on-site: YES

Routine SMP tasks being conducted?

Composite cover system monitoring: YES

SSDS monitoring: YES

Note: SEE PRR TEXT

6) Evaluation of Engineering Controls (ECs)

SSDS operations summary to be provided as part of annual PRR.

Note: SEE PRR TEXT

7) Site Documentation

Including updates regarding new Site hazardous materials to local agencies, notification to NYSDEC regarding any changes to Site conditions/operations, annual hazardous waste tax filings, routine reporting to the New York State Department of Environmental Conservation (NYSDEC)].

Note: SEE PRR TEXT

APPENDIX D
COMPOSITE COVER SYSTEM INSPECTION LOG AND PHOTOGRAPHIC LOG

Photograph 1: Ground floor parking area on the southwestern portion of the Site.

Photograph 2: Parking area on the west-central portion of the Site, facing north.

Photograph 3: Parking and landscaped area on the southeastern portion of the Site, facing southeast.

Photograph 4: Landscaped area on the central portion of the Site.

Photograph 5: Landscaped area on the central portion of the Site.

Photograph 6: Ground-level security room on the north-central portion of the Site.

Photograph 7: Ground-level building lobby on the northeastern portion of the Site.

Photograph 8: Typical partial cellar slab in the cellar-level electric room.

Photograph 9: Typical partial cellar slab in the cellar-level water meter fire pump room.

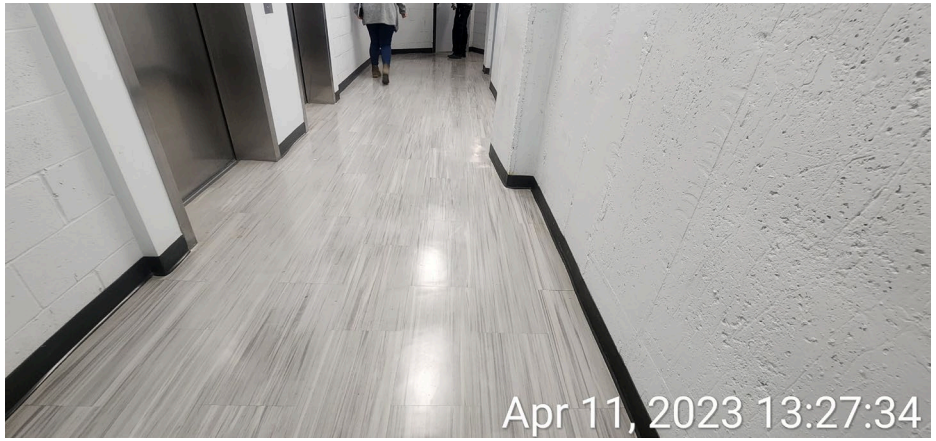

Photograph 10: Typical hallway finishing materials.

Photograph 11: Cellar-level bike storage room.

Photograph 12: Typical monitoring point in the cellar.

Photograph 13: Typical monitoring point on the ground floor.

Photograph 14: Sub-slab depressurization system (SSDS) manifold in the cellar-level telecommunications room.

Photograph 15: SSDS exhaust stack with rain cap on the 12th floor roof.

kelSITE COMPOSITE COVER SYSTEM INSPECTION LOG

NYSDEC BCP SITE NO. C203073

432 East 162nd Street (899 Elton Avenue), Bronx, New York

NAME: **MARCO BALLETTA, ANNA BROOKS, AKRF**	DATE: **04/11/2023**
TIME: **11:45**	WEATHER:**46-70°F, CLEAR, SUNNY**
Routine Inspection or Emergency Inspection (if emergency, specify nature)? **ROUTINE INSPECTION**	

Interior First Floor Area (Ground Level)

Description of floor condition:

CONCRETE SLAB WAS NOTED TO BE IN GOOD CONDITION. DUE TO MEDICAL VISITS BEING CONDUCTED IN THE ESSEN MEDICAL CENTER, PORTIONS OF THE COMMERCIAL SPACE WERE NOT INSPECTED.

Note any changes to or any unusual conditions of Site cover system component:

SEE ABOVE. NO FURTHER UNUSUAL CONDITIONS TO THE SITE COVER WERE NOTED.

Interior Courtyard

Description of surface condition:

CONCRETE SLAB WAS NOTED TO BE IN GOOD CONDITION. NO SURFICIAL BREAKS OR CRACKS THAT BREACHED THE STRUCTURAL SLAB WERE NOTED.

Note any changes to or any unusual conditions of Site cover system component:

NO UNUSUAL CONDITIONS TO THE SITE COVER WERE NOTED.

Interior Courtyard (Landscaped Areas)

Description of surface condition:

PERMEABLE PAVERS AND TOPSOIL WERE NOTED TO BE IN GOOD CONDITION. NO BREACH TO THE UNDERLYING DEMARCATION BARRIER OR COMPACTED SUBGRADE WERE OBSERVED.

Note any changes to or any unusual conditions of Site cover system component:

NO UNUSUAL CONDITIONS TO THE SITE COVER WERE NOTED.

Cellar Floor Area

Description of floor condition:

CONCRETE SLAB WAS NOTED TO BE IN GOOD CONDITION. NO BREACH TO THE STRUCTURAL SLAB INTEGRITY OR UNDERLYING VAPOR BARRIER WERE OBSERVED. NO SIGNIFICANT CRACKING OR DAMAGE WERE OBSERVED.

Note any changes to or any unusual conditions of Site cover system component:

NO CHANGES OR UNUSUAL CONDITIONS WERE NOTED.

Provide images to document conditions of each area and any unusual conditions.

NO UNUSUAL CONDITIONS WERE OBSERVED.

APPENDIX E
INSTITUTIONAL CONTROL (IC) AND ENGINEERING CONTROL (EC) CERTIFICATION FORM

Enclosure 2
NEW YORK STATE DEPARTMENT OF ENVIRONMENTAL CONSERVATION
Site Management Periodic Review Report Notice
Institutional and Engineering Controls Certification Form

Site Details **Box 1**

Site No. **C203073**

Site Name Elton Crossing (Melrose C Family)

Site Address: 432 East 162nd Street (899 Elton Avenue) Zip Code: 10451
City/Town: Bronx
County: Bronx
Site Acreage: 0.690

Reporting Period: April 16, 2022 to April 16, 2023

	YES	NO
1. Is the information above correct?	☑	☐
If NO, include handwritten above or on a separate sheet.		
2. Has some or all of the site property been sold, subdivided, merged, or undergone a tax map amendment during this Reporting Period?	☐	☑
3. Has there been any change of use at the site during this Reporting Period (see 6NYCRR 375-1.11(d))?	☐	☑
4. Have any federal, state, and/or local permits (e.g., building, discharge) been issued for or at the property during this Reporting Period?	☐	☑
If you answered YES to questions 2 thru 4, include documentation or evidence that documentation has been previously submitted with this certification form.		
5. Is the site currently undergoing development?	☐	☑

Box 2

	YES	NO
6. Is the current site use consistent with the use(s) listed below? Restricted-Residential, Commercial, and Industrial	☑	☐
7. Are all ICs in place and functioning as designed?	☑	☐

IF THE ANSWER TO EITHER QUESTION 6 OR 7 IS NO, sign and date below and DO NOT COMPLETE THE REST OF THIS FORM. Otherwise continue.

A Corrective Measures Work Plan must be submitted along with this form to address these issues.

_____ _____
Signature of Owner, Remedial Party or Designated Representative Date

Box 2A

	YES	NO
8. Has any new information revealed that assumptions made in the Qualitative Exposure Assessment regarding offsite contamination are no longer valid?	☐	☑
If you answered YES to question 8, include documentation or evidence that documentation has been previously submitted with this certification form.		
9. Are the assumptions in the Qualitative Exposure Assessment still valid? (The Qualitative Exposure Assessment must be certified every five years)	☑	☐
If you answered NO to question 9, the Periodic Review Report must include an updated Qualitative Exposure Assessment based on the new assumptions.		

SITE NO. C203073 **Box 3**

Description of Institutional Controls

Parcel	Owner	Institutional Control
2383-19	Elton Crossing Housing Development Fund	Ground Water Use Restriction Soil Management Plan Landuse Restriction Site Management Plan IC/EC Plan Monitoring Plan

groundwater use restriction, land use restriction, site management plan, IC/EC plan, soil management plan

Box 4

Description of Engineering Controls

Parcel	Engineering Control
2383-19	Cover System

cover system

Box 5

Periodic Review Report (PRR) Certification Statements

1. I certify by checking "YES" below that:

   a) the Periodic Review report and all attachments were prepared under the direction of, and reviewed by, the party making the Engineering Control certification;

   b) to the best of my knowledge and belief, the work and conclusions described in this certification are in accordance with the requirements of the site remedial program, and generally accepted engineering practices; and the information presented is accurate and compete.

YES	NO
☑	☐

2. For each Engineering control listed in Box 4, I certify by checking "YES" below that all of the following statements are true:

   (a) The Engineering Control(s) employed at this site is unchanged since the date that the Control was put in-place, or was last approved by the Department;

   (b) nothing has occurred that would impair the ability of such Control, to protect public health and the environment;

   (c) access to the site will continue to be provided to the Department, to evaluate the remedy, including access to evaluate the continued maintenance of this Control;

   (d) nothing has occurred that would constitute a violation or failure to comply with the Site Management Plan for this Control; and

   (e) if a financial assurance mechanism is required by the oversight document for the site, the mechanism remains valid and sufficient for its intended purpose established in the document.

YES	NO
☑	☐

IF THE ANSWER TO QUESTION 2 IS NO, sign and date below and DO NOT COMPLETE THE REST OF THIS FORM. Otherwise continue.

A Corrective Measures Work Plan must be submitted along with this form to address these issues.

_____ _____

Signature of Owner, Remedial Party or Designated Representative Date

IC CERTIFICATIONS
SITE NO. C203073

Box 6

SITE OWNER OR DESIGNATED REPRESENTATIVE SIGNATURE

I certify that all information and statements in Boxes 1,2, and 3 are true. I understand that a false statement made herein is punishable as a Class "A" misdemeanor, pursuant to Section 210.45 of the Penal Law.

I Matthew Kelly at 902 Broadway, 13th Floor, NY, NY 10010,
print name — print business address

am certifying as Owner/Remedial Party - Elton Crossing Associates, L.P. (Owner or Remedial Party)

for the Site named in the Site Details Section of this form.

Signature of Owner, Remedial Party, or Designated Representative Rendering Certification — Date: 5/12/2023

EC CERTIFICATIONS

Box 7

Signature

I certify that all information in Boxes 4 and 5 are true. I understand that a false statement made herein is punishable as a Class "A" misdemeanor, pursuant to Section 210.45 of the Penal Law.

I Michelle Lapin, P.E. at 440 Park Avenue South, 7th Floor, NY, NY 10016,
print name — print business address

am certifying as a for the Owner/Remedial Party
(Owner or Remedial Party)

STATE OF NEW YORK · MICHELLE LAPIN · No. 072[illegible] · LICENSED PROFESSIONAL ENGINEER

05/10/2023

Signature of , for the Owner or Remedial Party, Rendering Certification — Stamp (Required for PE) — Date