APPENDIX L

SITE MANAGEMENT PLAN (SMP)

New 470 Project

12 ECKFORD STREET
BROOKLYN, KINGS COUNTY, NEW YORK

SITE MANAGEMENT PLAN

NYSDEC Site Number: C224242

Prepared for:

New York State Department of Environmental Conservation
Division of Environmental Remediation, Remedial Bureau B
625 Broadway
Albany, New York 12233

Prepared on Behalf of:

New 470 LLC
58 Vanderbilt Motor Parkway, Suite 100
Commack, New York 11725

Prepared by:

AKRF, Inc.
440 Park Avenue South, 7th Floor
New York, New York 10016

Revisions to Final Approved Site Management Plan:

Revision No.	Date Submitted	Summary of Revision	NYSDEC Approval Date

DECEMBER 2019

CERTIFICATION STATEMENT

I, Michelle Lapin, P.E., certify that I am currently a NYS registered Professional Engineer as in defined in 6 NYCRR Part 375 and that this Site Management Plan was prepared in accordance with all applicable statutes and regulations and in substantial conformance with the DER Technical Guidance for Site Investigation and Remediation (DER-10).

Michelle Lapin, P.E.	12/13/2019	
NYS Professional Engineer #073934-1	Date	Signature/Stamp

TABLE OF CONTENTS

1.0 INTRODUCTION 2
1.1 General 2
1.2 Purpose 2
1.3 Revisions 2
1.4 Notifications 3
2.0 SITE BACKGROUND 5
2.1 Site Location and Description 5
2.2 Physical Setting 5
2.2.1 Land Use 5
2.2.2 Geology And Hydrogeology 5
2.3 Site History 5
2.4 Investigation and Remedial History 6
2.5 Remedial Action (RA) Objectives (RAOs) 11
2.6 Summary of Remedial Actions (RAs) 11
2.6.1 Underground Storage Tank (UST) Removal and Registration 11
2.6.2 Soil/Fill Excavation and Off-Site Disposal 12
2.6.3 Material Import 12
2.6.4 Engineering Controls (ECs) 12
2.6.5 Institutional Controls (ICs) 14
2.7 Remaining Contamination 14
2.7.1 Soil/Fill 14
2.7.2 Groundwater 15
2.7.3 Soil Vapor 15
3.0 INSTITUTIONAL AND ENGINEERING CONTROL (IC AND EC) PLAN 16
3.1 Introduction 16
3.1.1 General 16
3.1.2 Purpose 16
3.2 Institutional Controls (ICs) 16
3.3 Engineering Controls (ECs) 17
3.3.1 Composite Cover System 17
3.3.2 Vapor Barrier and Waterproofing Membranes 18
3.3.3 Sub-Slab Depressurization System (SSDS) 18
3.3.4 Soil Vapor Extraction (SVE) System (SVES) 19
3.3.5 Criteria for Completion of Remediation/Termination of Engineering Controls 19
3.4 Excavation Work Plan (EWP) 20
3.5 Health and Safety Plan (HASP) and Community Air Monitoring Plan (CAMP) 20
4.0 MONITORING AND SAMPLING PLAN 21
4.1 Introduction 21
4.1.1 General 21
4.1.2 Purpose and Schedule 21
4.2 Site-Wide Inspection 21
4.3 Monitoring and Sampling Protocol 22
4.3.1 Composite Cover System 22
4.3.2 Sub-Slab Depressurization System (SSDS) 22
4.3.3 Soil Vapor Extraction System (SVES) 23
4.3.4 Sampling Frequency, and Sample Collection and Analysis 24
4.4 Monitoring Reporting Requirements 24
5.0 OPERATION AND MAINTENANCE (O&M) PLAN 25

5.1 Introduction 25
5.2 SSDS 25
5.2.1 SSDS Start-Up and Testing 25
5.2.2 SSDS Routine System Inspection 26
5.2.3 SSDS Operation and Maintenance 26
5.2.4 SSDS Non-Routine Checks and Equipment Maintenance 27
5.2.5 Monitoring Devices and Alarms 27
5.3 SVES 27
5.3.1 SVES Start-Up and Testing 28
5.3.2 SVES Routine System Inspection 28
5.3.3 SVES Routine Operation and Maintenance 29
5.3.4 SVES Non-Routine Checks and Equipment Maintenance 30
5.3.5 Monitoring Devices and Alarms 30
6.0 PERIODIC ASSESSMENTS/EVALUATIONS 31
6.1 Climate Change Vulnerability Assessment 31
6.2 Green Remediation Evaluation 31
6.2.1 Green Remediation Evaluation Building Operations 31
6.2.2 Timing of Green Remediation Evaluations 31
6.2.3 Remedial Systems 32
6.2.4 Building Operations 32
6.2.5 Frequency of System Checks, Sampling and Other Periodic Activities 32
6.3 Remedial System Optimization (RSO) 32
7.0 REPORTING REQUIREMENTS 34
7.1 Site Management Reports 34
7.2 Periodic Review Report (PRR) 35
7.2.1 Certification of Institutional and Engineering Controls (ICs and ECs) 36
7.3 Corrective Measures Work Plan (CMWP) 37
7.4 Remedial Site Optimization (RSO) Report 37
8.0 REFERENCES 39

IN-TEXT TABLES

In-Text Table 1 – Summary of ICs and ECs
In-Text Table 2 – Summary of Inspections, Monitoring, and Reporting
In-Text Table 3 – Site Contact List
In-Text Table 4 – Notifications
In-Text Table 5 – SSDS Monitoring Parameters
In-Text Table 6 – SVES Monitoring Parameters
In-Text Table 7 – SVES Sampling Parameters and Schedule
In-Text Table 8 – SSDS Routine and Detailed Inspection Schedule
In-Text Table 9 – SVES Routine and Detailed Inspection Schedule
In-Text Table 10 – Schedule of Interim Monitoring/Inspection Reports

ATTACHED TABLES

Attached Tables1 and 2 – Tank Endpoint Sample Analytical Results
Attached Tables 3 through 7 – Soil Endpoint Sample Concentrations Above UUSCOs and/or RRSCOs

FIGURES

Figure 1 – Site Location
Figure 2 – Site and Sample Location Plan
Figure 3 – Inferred Groundwater Contour Map – June 6, 2016
Figure 4 – SI, RI, and SRI Soil/Fill Sample Concentrations Above NYSDEC UUSCOs and/or RRSCOs
Figure 5 – RI and SRI Groundwater Sample Concentrations Above NYSDEC AWQSGVs
Figure 6 – RI, Delineation Sampling, and SRI Soil Vapor Sample Concentrations
Figure 7 – Remedial Excavation Plan
Figure 8 – Tank Endpoint Sample Concentrations Above UUSCOs and/or RRSCOs
Figure 9 – Post-Excavation Site-Wide Endpoint Sample Concentrations Above UUSCOs and/or RRSCOs
Figure 10 – Composite Cover System Plan
Figure 11 – SSDS and SVES Plan

APPENDICES

Appendix A – Environmental Easement (EE)
Appendix B – Excavation Work Plan (EWP)
Appendix C – SSDS and SVES As-Built, Drawings, and Manufacturer's Specifications
Appendix D – Health and Safety Plan (HASP) & Community Air Monitoring Program (CAMP)
Appendix E – Quality Assurance Project Plan (QAPP)
Appendix F – Site Management Forms

LIST OF ACRONYMS

Acronym	Definition
ACM	Asbestos-Containing Material
ASTM	American Society of Testing Materials
AWQSGV	Ambient Water Quality Standards and Guidance Values
BCA	Brownfield Cleanup Agreement
BCP	Brownfield Cleanup Program
BTEX	Benzene, Toluene, Ethylbenzene, Xylenes
C & D	Construction and Demolition
CAMP	Community Air Monitoring Plan
CBS	Chemical Bulk Storage
COC	Certificate of Completion
CP	Commissioner Policy
CVOC	Chlorinated Volatile Organic Compound
DER	Division of Environmental Remediation
DUSR	Data Usability Summary Report
EC	Engineering Control
ECL	Environmental Conservation Law
EE	Environmental Easement
ELAP	Environmental Laboratory Approval Program
ESA	Environmental Site Assessment
EWP	Excavation Work Plan
FER	Final Engineering Report
GPA	Gas-Permeable Aggregate
HASP	Health and Safety Plan
IC	Institutional Control
LBP	Lead Based Paint
LUST	Leaking Underground Storage Tank
MTBE	Methyl Tert-Butyl Ether
NYCDOB	New York City Department of Buildings
NYCRR	New York Code of Rules and Regulations
NYCOER	New York City Office of Environmental Remediation
NYSDEC	New York State Department of Environmental Conservation
NYSDOH	New York State Department of Health
NYCRR	New York Codes, Rules, and Regulations
O&M	Operation and Maintenance
OSHA	Occupational Safety and Health Administration
P&ID	Process and Instrumentation Diagram
PBS	Petroleum Bulk Storage
PCB	Polychlorinated Biphenyl
PCE	Tetrachloroethylene

Acronym	Definition
PID	Photoionization Detector
PRR	Periodic Review Report
PVC	Polyvinyl Chloride
QA/QC	Quality Assurance/Quality Control
QAPP	Quality Assurance Project Plan
RA	Remedial Action
RAO	Remedial Action Objective
RAWP	Remedial Action Work Plan
RCRA	Resource Conservation and Recovery Act
REC	Recognized Environmental Condition
RI	Remedial Investigation
RIR	Remedial Investigation Report
RSO	Remedial System Optimization
SCFM	Standard Cubic Feet Per Minute
SCG	Standards, Criteria, and Guidelines
SCO	Soil Cleanup Objective
SMP	Site Management Plan
SOP	Standard Operating Procedures
SOW	Statement of Work
SRI	Supplemental Remedial Investigation
SRIR	Supplemental Remedial Investigation Report
SSDS	Sub Slab Depressurization System
SVE	Soil Vapor Extraction
SVES	Soil Vapor Extraction System
SVOC	Semivolatile Organic Compounds
TAL	Target Analyte List
TCE	Trichloroethylene
TCL	Target Compound List
TCLP	Toxicity Characteristic Leachate Procedure
USEPA	United States Environmental Protection Agency
UST	Underground Storage Tank
VCP	Voluntary Cleanup Program
VFD	Variable Frequency Drive
VMP	Vapor Monitoring Point
VOC	Volatile Organic Compound

EXECUTIVE SUMMARY

As required by this Site Management Plan (SMP) under the New York State Department of Environmental Conservation (NYSDEC) Brownfield Cleanup Program (BCP) (Site No. C224242) (the Site), a summary of the controls implemented for the Site is included as In-Text Table 1; and a summary of the inspections, monitoring, maintenance, and reporting activities is included as In-Text Table 2.

In-Text Table 1 - Summary of Institutional Controls and Engineering Controls

Site Identification:	New 470 Project; BCP Site No. C224242 12 Eckford Street, Brooklyn, New York
Institutional Controls (ICs):	1. The property may be used for restricted residential, commercial, and industrial use. 2. Environmental Easement (EE)
Engineering Controls (ECs):	1. Composite Cover System 2. Vapor Barrier Membrane 3. Sub-Slab Depressurization System (SSDS) 4. Soil Vapor Extraction (SVE) System (SVES)

In-Text Table 2 - Summary of Inspections, Monitoring, and Reporting

Inspection	**Frequency**
Composite Cover System Inspection	First inspection no more than 18 months after Certificate of Completion (CoC), then at least annually thereafter.
Sub-Slab Depressurization System (SSDS)	Routine Inspections – Quarterly
	Detailed Inspections – Semi-Annually
Soil Vapor Extraction System (SVES)	Routine Inspections – Monthly
	Detailed Inspections – Quarterly
Reporting	**Frequency**
Letter Report With As-Builts	First quarter following SSDS/SVES startup
Letter Report Figures and Attachments	Semi-Annually
Letter Report With Figures and Attachments	Quarterly following SVES startup
Periodic Review Report (PRR)	Annually beginning 18 months after issuance of Certificate of Completion (COC) until termination of EE

Further descriptions of these requirements are provided in detail in the latter sections of this SMP.

1.0 INTRODUCTION

This Site Management Plan (SMP) is a required element of the remedial program for the New 470 Project located at 12 Eckford Street in Brooklyn, New York (hereinafter referred to as the Site). The Site is currently in the New York State (NYS) Brownfield Cleanup Program (BCP) (Site No. C224242), which is administered by the NYS Department of Environmental Conservation (NYSDEC).

1.1 General

New 470 LLC entered into a Brownfield Cleanup Agreement (BCA) on December 1, 2016 (BCA Index No. C224242-10-16) as a Volunteer with NYSDEC to remediate the Site. The Site is identified as Brooklyn Borough Block 2714, Lot 33 on the New York City Tax Map. The Site location and boundaries are shown on Figures 1 and 2, respectively. The boundaries of the Site are more fully described in the metes and bounds Site description that is part of the Environmental Easement (EE), provided as Appendix A.

1.2 Purpose

After completion of the remedial work, some contamination was left in the Site subsurface, which is hereafter referred to as "remaining contamination". Institutional and Engineering Controls (ICs and ECs) have been incorporated into the Site remedy to control exposure to remaining contamination to ensure protection of public health and the environment. An EE granted to NYSDEC and recorded with the Kings County Clerk requires compliance with this SMP and all ECs and ICs placed on the Site, as required by this SMP.

This SMP was prepared to manage remaining contamination at the Site until the EE is extinguished in accordance with Environmental Conservation Law (ECL) Article 71, Title 36. This SMP has been approved by NYSDEC, and compliance with this SMP is required by the grantor of the EE and the grantor's successors and assigns. This SMP may be revised only with the approval of the NYSDEC or its successor agency managing environmental issues in New York State.

It is important to note that:

- This SMP details the Site-specific implementation procedures required by the EE. Failure to properly implement this SMP is a violation of the EE, which is grounds for revocation of the Certificate of Completion (COC).
- Failure to comply with this SMP is also a violation of ECL, 6 New York Code of Rules and Regulations (NYCRR) Part 375 and the BCA (Index No. C224242-10-16; Site No. C224242) for the Site, and thereby subject to applicable penalties.

All reports associated with the Site can be viewed by contacting NYSDEC or its successor agency managing environmental issues in New York State. A list of contacts for persons involved with the Site is provided in In-Text Table 3 in Section 1.4 of this SMP.

This SMP was prepared by AKRF, Inc. (AKRF), on behalf of New 470 LLC (the Volunteer), in accordance with the requirements of the NYSDEC's Division of Environmental Remediation (DER)-10 (Technical Guidance for Site Investigation and Remediation), dated May 3, 2010, and the guidelines provided by the NYSDEC. This SMP addresses the means for implementing the ICs and ECs required by the EE for the Site.

1.3 Revisions

Any revisions to this SMP will be proposed in writing to the NYSDEC's project manager (or the project manager of NYSDEC's successor agency). Revisions will be necessary upon, but not limited to, the following occurring: a change in media monitoring requirements, upgrades to or

shut-down of a remedial system; post-remedial removal of contaminated soil/fill underlying the composite cover system; or other significant change to the Site conditions. In accordance with the EE for the Site, the NYSDEC will provide a notice of any approved changes to the SMP, and append these notices to the SMP retained in its files. Any changes will be documented on the cover page of this SMP.

1.4 Notifications

Notifications will be submitted by the property owner to the NYSDEC, as needed, in accordance with NYSDEC's DER – 10 for the following reasons:

- 60-day advance notice of any proposed changes in Site use that are required under the terms of the BCA, 6NYCRR Part 375 and/or ECL.
- 7-day advance notice of any field activity associated with the remedial program.
- 15-day advance notice of any proposed ground-intrusive activity pursuant to the Excavation Work Plan (EWP) (Appendix B).
- Notice within 48 hours of any damage or defect to the foundation, structures, or EC that reduces or has the potential to reduce the effectiveness of an EC, and likewise, any action to be taken to mitigate the damage or defect.
- Verbal notice by noon of the following day of any emergency, such as a fire, flood or earthquake that reduces or has the potential to reduce the effectiveness of ECs in place at the Site, with written confirmation within 7 days that includes a summary of actions taken, or to be taken, and the potential impact to the environment and the public.
- Follow-up status reports on actions taken to respond to any emergency event requiring ongoing responsive action submitted to the NYSDEC within 45 days describing and documenting actions taken to restore the effectiveness of the ECs.

Any change in the ownership of the Site or the responsibility for implementing this SMP will include the following notifications:

- At least 60 days prior to the change, the NYSDEC will be notified in writing of the proposed change. This will include a certification that the prospective purchaser/remedial party has been provided with a copy of the BCA and all approved work plans and reports, including this SMP.
- Within 15 days after the transfer of all or part of the Site, the new owner's name, contact representative, and contact information will be confirmed in writing to the NYSDEC.

In-Text Tables 3 and 4 include contact information for the above notification. The information on the following tables will be updated as necessary to provide accurate contact information.

In-Text Table 3 - **Site Contact List**

Company	Individual Name	Title	Contact Number
AKRF	Michelle Lapin, P.E.	Remedial Engineer	(646) 388-9520
	Marc S. Godick, LEP	Project Director	(914) 922-2356
	Amy Jordan	Project Manager	(646) 388-9864
New 470 LLC	Ronald Walker	Volunteer Representative	(631) 234-1600

In-Text Table 4 – Notifications

Company	Individual Name	Title	Contact Number
NYSDEC	Steven Walsh	Project Manager	(518) 402-9824
	Gerard Burke	Director, Remedial Bureau B	(518) 402-9767
	Jane O'Connell	Chief, Superfund and Brownfield Cleanup Section	(718) 482-4599
Note: Notifications are subject to change and will be updated as necessary.			

2.0 SITE BACKGROUND

2.1 Site Location and Description

The Site is located at 12 Eckford Street in the Williamsburg neighborhood in Brooklyn, Kings County, New York and is identified as Brooklyn Borough Block 2714, Lot 33 on the New York City Tax Map (see Figure 1). The Site is a 0.5123-acre parcel bounded by: a former commercial building currently being used as a construction office for the Site and residential buildings to the north; residential buildings to the east; Newton Street to the southeast; Eckford Street to the west; and Manhattan Avenue to the southwest (see Figure 2). The boundaries of the Site are more fully described in the Environmental Easement, included as Appendix A. The owner and Volunteer for the Site at the time of issuance of this SMP is New 470 LLC.

2.2 Physical Setting

2.2.1 Land Use

The Site is being developed with an 8-story building with mechanical space in the partial cellar on the southwestern portion of the Site, an at-grade parking garage with 37 tenant parking spaces and a lobby on the ground floor, and 108 residential units above. Twenty percent of the residential units consist of affordable housing. An open-air concrete dog run occupies the northwestern portion of the Site.

Surrounding uses include commercial, residential, educational, and open space properties.

2.2.2 Geology And Hydrogeology

Prior to development, the stratigraphy of the Site was documented to consist of between approximately 6 and 12 feet of urban fill characterized by sand, gravel, and silt with concrete, asphalt, brick, and ash. Below the fill was an apparent native sand, gravel, and silt stratum to the termination of each boring (approximately 20 feet below sidewalk grade). Groundwater was encountered between approximately 10 and 12.5 feet below grade during environmental investigations (detailed in Section 2.4). Based on the groundwater elevation measurements collected on June 6, 2016 from the Site and off-site portion of former Lot 1 (north-adjacent to the Site), groundwater flow is generally from east to west beneath the Site (Figure 3).

2.3 Site History

According to historic Sanborn fire insurance maps, the Site was undeveloped until prior to 1905. By 1916, former Lot 1 was developed with an unspecified factory building and former Lot 33 was developed with a barrel shed, a carriage garage, and a cooperage with an office. By 1942, former Lot 1 was developed with a sash and door storage facility and a woodworking shop associated with the north-adjacent I. Feldman & Son Inc. Sash & Door Manufacturer; former Lot 30 was developed with a two-story building used for window sash storage; former Lot 32 was labeled as “barrels, boxes, and automobile” with a gasoline tank on the southwestern portion; and former Lot 33 was developed with a cooperage and an office. By 1951, former Lot 1 was developed with a metal container manufacturer and an enameling works with a baking oven and spray booths and former Lot 30 was labeled “to be: garage”. Former Lot 1 was developed with a new factory building in 1963 and with a spray booth and storage on the eastern portion by 1965. By 1965, former Lot 30 was developed as a garage and as a factory by 1978. By 1983, former Lot 32 was used for freight storage and motor freight storage between 1986 and 1991. The Site was vacant circa 2014-2016 and the former buildings were demolished in 2015 and 2016 to support the redevelopment. The

surrounding area was developed historically with residential, commercial, educational, manufacturing, automotive, and woodworking uses.

2.4 Investigation and Remedial History

The following environmental reports were prepared for the Site:

Phase I Environmental Site Assessment (ESA) Report, 470 Manhattan Avenue, Brooklyn, New York, URS Corporation (URS), April 2013

URS prepared a Phase I ESA Report of former Lot 33 in April 2013. The scope of the Phase I ESA included a Site inspection and an evaluation of readily available historical information, selected environmental databases, and electronic records. The assessment identified the following recognized environmental concerns (RECs):

- Former Lot 33 contained an E-Designation for hazardous materials listed in the Department of City Planning E-Designation database, which was established as part of the rezoning of Williamsburg and Greenpoint.
- The surrounding area was developed historically with manufacturing facilities, including an electroplating facility, dry cleaners, a steel company, and Mobil Oil Corporation. These properties were listed in multiple databases with open- and closed-status spills, hazardous waste generation, soil and groundwater contamination and remediation, chemical and petroleum bulk storage (CBS and PBS), and leaking underground storage tanks (LUSTs).

Phase I Environmental Site Assessment Report, 119-125 Newton Street, Brooklyn, New York, Hydrotech Environmental, Corp. (Hydrotech), April 2013

Hydrotech prepared a Phase I ESA Report of former Lots 30 and 32 in April 2013. The scope of the Phase I ESA included a Site inspection and an evaluation of readily available historical information, selected environmental databases, and electronic records. The assessment identified the following RECs:

- Former Lots 30 and 32 contained E-Designations for hazardous materials, established as part of the rezoning of Williamsburg and Greenpoint.
- Historical Sanborn maps dated between 1942 and 2007 identified underground storage tanks (USTs) on former Lot 32.
- Former Lots 30 and 32 were developed historically with a garage, a metal fabrication shop, and a scrap metal yard.

Environmental Summary Report, 470 Manhattan Avenue, Block 2714, Lots 1, 30, 32, and 33, Brooklyn, New York, AKRF, Inc., September 2015

AKRF prepared an Environmental Summary Report of the Site and an off-site portion of former Lot 1 in September 2015. The report included the findings of an inspection and an evaluation of historical Sanborn insurance maps and selected environmental databases. The assessment identified the following RECs:

- The former Site lots contained E-Designations for hazardous materials listed in the Department of City Planning E-Designation database, established as part of the rezoning of Williamsburg and Greenpoint.
- Historical uses of the Site included: unspecified manufacturing, sash and door storage, and a woodworking shop associated with the I. Feldman & Son Inc. Sash & Door Manufacturer, a metal container manufacturer, and an enameling works with a baking oven and spray booths

on former Lot 1; a garage and an unspecified factory on former Lot 30; a motor freight facility with a gasoline UST on former Lot 32; and a barrel shed, a carriage garage, and a cooperage on former Lot 33.

- An oil burner switch was observed on the wall of a former partially demolished Site building on former Lot 30; however, no tank was observed.
- The area surrounding the Site was developed historically with manufacturing, automotive, and woodworking uses, including: the Joseph Goetz Manhattan Cabinet Works, the I. Feldman Sash and Door Manufacturer, unspecified manufacturing and warehouses, textile printing, cloth combining, a wire spring manufacturer, a cabinet finisher, a tin smith, a fuel oil company, a blacksmith, the George N. Gardiner & Son Marine Paint Manufacturer, a beverage bottling, junk storage, Meisel Danowitz & Company with associated planning and molding facilities, lumber storage and yards, kilns, cooperages, Atlantic Hardwood Company, an iron pipe warehouse, a metal works, lacquer spraying, a machine shed and shop, a motor grinder, a motor freight station, garages with gasoline tanks, trucking and parking facilities, tractor storage, a truck bay, and automotive repair and washing, and gasoline filling stations. Additionally, several properties in the surrounding area were listed in the Resource Conservation and Recovery Act (RCRA), PBS, Spills, E-Designation, and LUST databases. A groundwater monitoring well was observed east of the Site in the Graham Avenue sidewalk. The purpose of the monitoring well was not able to be ascertained, but was noted to be possibly related to current or historical off-site uses. A vent pipe and a fill port for No. 2 fuel oil were observed on the northeastern exterior wall of an off-site, three-story residential building on former Lot 1, north-adjacent to the Site. Minor staining was observed around the fill port.

Phase II Work Plan (Short Form), 470 Manhattan Avenue, Block 2714, Lots 1, 30, 32, and 33, Brooklyn, New York, AKRF, Inc., September 2015

AKRF prepared a Phase II Work Plan and associated Health and Safety Plan (HASP) for the Site and an off-site portion of former Lot 1 (also owned by the Volunteer) in September 2015. The work plan proposed sampling locations and included the installation of 10 soil borings with the collection and laboratory analysis of 20 soil samples, the installation of five temporary groundwater monitoring wells with the collection and installation of five groundwater samples, and the installation of seven temporary soil vapor points with the collection and analysis of seven soil vapor points and 1 ambient air sample. The HASP provided Site-specific health and safety measures to be employed during implementation of the investigation. The scope of the investigation was based on the previous reports for the Site.

Remedial Investigation (RI) Report (RIR), 470 Manhattan Avenue, Block 2714, Lots 1, 30, 32, and 33, Brooklyn, New York, AKRF, Inc., October 2015

AKRF conducted an RI for the Site and an off-site portion of former Lot 1 (also owned by the Volunteer) and prepared an RIR in October 2015. The RI was conducted in accordance with the New York City Office of Environmental Remediation (NYCOER)-approved September 2015 Phase II Work Plan. Soil/fill beneath the Site consisted of approximately 12 feet of fill material characterized by sand, gravel, silt, concrete, asphalt, brick, and ash, underlain by apparent native sand, gravel, and silt. Groundwater was encountered between approximately 10 and 12 feet below surface grade.

The RIR concluded that some elevated concentrations of volatile organic compounds (VOCs), semivolatile organic compounds (SVOCs), metals, and polychlorinated biphenyls (PCBs) were detected in on- and off-site soil/fill samples. The VOC methyl tert-butyl ether (MTBE), SVOCs, and metals were detected in on-site groundwater at concentrations above their applicable standards

[Ambient Water Quality Standards and Guidance Values (AWQSGVs)]; and the VOC 1,1-dichloroethane (1,1-DCA), metals, and the pesticide chlordane were detected in groundwater beneath the off-site portion of former Lot 1 at concentrations above their respective AWQSGVs. VOCs associated with petroleum were detected at concentrations up to 279 micrograms per cubic meter (µg/m^3) and solvent-related VOCs were detected at concentrations up to 2,580 µg/m^3. The highest concentrations of both chlorinated solvent- and petroleum-related VOCs were detected in the soil vapor samples collected on-site.

Remedial Action Work Plan (RAWP), 470 Manhattan Avenue, Block 2714, Lots 1, 30, 32, and 33, Brooklyn, New York, AKRF Engineering, P.C., October 2015

AKRF prepared a RAWP for the Site and an off-site portion of former Lot 1 (also owned by the Volunteer) in October 2015. The RAWP outlined the remedial action objectives (RAOs) and established procedures and cleanup objectives for the protection of public health and the environment, Track 4 soil cleanup objectives (SCOs), and soil/fill handling procedures. The RAWP also required the installation of a vapor barrier and an active sub-slab depressurization system (SSDS) to address potential vapor intrusion into the Site building, a Site-wide composite cover system to prevent direct exposure to residual contamination in soil, and outlined a project schedule for construction. The RAWP and associated Stipulation List were approved by NYCOER in November 2015.

Delineation Sampling Work Plan, 470 Manhattan Avenue, Block 2714, Lots 1, 30, 32, and 33, Brooklyn, New York, AKRF, Inc., February 2016

AKRF prepared a Delineation Sampling Work Plan in February 2016 to establish a sampling protocol to delineate the solvent-related VOC contamination identified in soil vapor on the northeastern and eastern portions of the Site during the RI. The work plan was developed in response to AKRF's November 2015 RIR and a telephone conference with representatives of NYCOER. The work plan proposed sampling locations and included the installation of three soil borings with continuous sample collection and laboratory analysis of three soil samples, and the installation of four soil vapor points with collection and laboratory analysis of four soil vapor samples.

The results of the delineation sampling, which were submitted to NYCOER in an email dated April 20, 2016 and discussed in a conference call on May 3, 2016, did not identify elevated concentrations of VOCs in soil. Of note in soil vapor, tetrachloroethylene (PCE) was detected at concentrations up to 956 µg/m^3, trichloroethylene (TCE) was detected at concentrations up to 1,120 µg/m^3, 1,1-DCA was detected at concentrations up to 9,230 µg/m^3, and 1,1,1-trichlorethane (1,1,1-TCA) was detected at concentrations up to 37,300 µg/m^3.

Supplemental Remedial Investigation (SRI) and Soil Vapor Extraction (SVE) Pilot Test Work Plan, 12 Eckford Street (470 Manhattan Avenue), Brooklyn, New York, AKRF, Inc., May 2016

AKRF prepared an SRI and SVE Pilot Test Work Plan and associated HASP for the Site, an off-site portion of former Lot 1, and the east-adjacent lot (off-site Lot 29) in May 2016. The work plan proposed sampling locations and included: installation of eight soil borings with continuous sample collection and laboratory analysis of eight soil samples, installation of four temporary groundwater monitoring wells with collection and laboratory analysis of four groundwater samples, and installation of three temporary soil vapor points with collection and laboratory analysis of three soil vapor samples and one ambient air sample. The work plan also included the installation of two SVE wells and three clustered soil vapor points for use during an SVE pilot test, which was conducted to establish the necessary quantity and location of extraction wells, and optimize the design of a full-scale SVES. As part of the pilot test, six influent vapor samples were collected for laboratory analysis of VOCs. The associated HASP provided Site-specific health and safety

measures to be employed during implementation of the investigation. The scope of the investigation was based on the previous reports for the Site.

Supplemental Remedial Investigation Report (SRIR), 12 Eckford Street (470 Manhattan Avenue), Brooklyn, New York, AKRF, Inc., July 2016

AKRF conducted an SRI at the Site and off-site portion of former Lot 1 in June 2016. The SRI was conducted in accordance with the AKRF's May 2016 SRI and SVE Pilot Test Work Plan and associated HASP, with the exception of the following deviations: the east-adjacent Lot 29 was inaccessible at the time of the investigation; therefore, the soil vapor points proposed in the rear yard were relocated west of the proposed locations onto former Lot 33 on the eastern portion of the Site; and the sub-slab soil vapor point and indoor air sample were not collected and an indoor air quality survey was not conducted proposed on Lot 29 due to access issues. Soil/fill beneath the Site consisted of approximately 12 feet of fill material characterized by sand, gravel, silt, concrete, asphalt, brick, and ash, underlain by apparent native sand, gravel, and silt. Groundwater was encountered between approximately 10 and 12 feet below grade.

Soil and groundwater samples were analyzed for VOCs. The SRI did not identify elevated concentrations of VOCs in on- or off-site soil samples. The VOC methyl tert butyl ether (MTBE) was detected above its AWQSGV in one on-site groundwater sample, and several VOCs were detected above applicable standards in two off-site groundwater samples.

A review of the soil vapor sample analytical results identified 22 VOCs in the three soil vapor samples collected on-site and from an off-site portion of former Lot 1. VOCs associated with petroleum [including benzene, toluene, ethylbenzene, xylenes (collectively referred to as BTEX), 1,2,4-trimethylbenzene, 1,3,5-trimethylbenzene, 2-butanone, 2-hexanone, cyclohexane, ethanol, tert-butyl alcohol, n-hexane, o-xylene, and 4-ethyltoluene] were detected at concentrations up to 1,680 $\mu g/m^3$ in the on-site soil vapor sample and chlorinated volatile organic compounds (CVOCs) (including PCE, 1,1,1-TCA, and 1,1-DCA) were detected at concentrations up to 92.8 $\mu g/m^3$ in an off-site soil vapor sample.

Soil Waste Classification Report, 12 Eckford Street (470 Manhattan Avenue), Brooklyn, New York, AKRF, October 2016

AKRF conducted waste classification sampling at the Site in October 2016 to gain off-site disposal acceptance for soil/fill excavated during development. The waste classification sampling included the excavation of three test pits to approximately 12 feet below grade at the location of the partial cellar, and four test pits to approximately four feet below grade at the location of the slab-on-grade portion of the Site building. Prior to test pit excavation, a geophysical survey was conducted across the entire Site to clear the proposed test pit locations of utilities and subsurface obstructions, and to locate potential USTs in the Site subsurface.

The geophysical survey identified an approximately 7-foot by 5-foot metallic anomaly on the southwestern portion of the Site at the approximate location of the gasoline UST shown on the historical Sanborn maps (see Section 2.3). The results of the waste classification sampling identified some elevated levels of SVOCs, pesticides, metals, and hexavalent chromium in Site soil/fill. One test pit excavated at the eastern portion of the partial cellar contained lead at concentrations exceeding the United States Environmental Protection Agency (USEPA) hazardous waste threshold.

Remedial Action Work Plan – New 470 Project, 12 Eckford Street (470 Manhattan Avenue), AKRF, November 2016

In 2016, the Site entered into the New York State BCP (BCP Site No. C224242). AKRF prepared a NYSDEC RAWP for the Site in November 2016. After the Site was accepted into the BCP,

NYSDEC became the primary agency overseeing remediation, with the NYSDEC RAWP superseding the October 2015 NYCOER-approved RAWP. The RAWP outlined the RAOs, which established procedures and cleanup objectives for the protection of public health and the environment. Similar to the October 2015 RAWP, the November 2016 RAWP established Track 4 SCOs and soil handling procedures, required the installation of a vapor barrier and active SSDS to address potential vapor intrusion into the Site building, a Site-wide composite cover system to prevent direct exposure to residual contamination in soil, and outlined a project schedule for construction. The November 2016 RAWP also required the installation of an SVES and noted that any petroleum storage tanks and/or soil exceeding hazardous waste criteria would be properly removed. The RAWP and associated Decision Document (DD) were approved by NYSDEC and New York State Department of Health (NYSDOH) in December 2016.

Soil Lead Delineation Report – 12 Eckford Street (470 Manhattan Avenue), Brooklyn, NY, AKRF, Inc., May 2018

AKRF conducted soil sampling at the Site to delineate the soil exceeding the hazardous waste criteria for lead, which was identified during soil waste classification sampling in 2016. The sampling included excavation of four test pits around the location where hazardous lead levels were previously detected, with the collection and laboratory analysis of 16 soil samples. Laboratory analysis indicated that none of the 2018 soil samples exceeded hazardous waste criteria, indicating that the limited hazardous lead hotspot had been delineated.

Phase I Environmental Site Assessment Report, 12 Eckford Street (470 Manhattan Avenue), Brooklyn, New York, AKRF, Inc., May 2018

AKRF prepared a Phase I ESA Report for the Site in May 2018. The scope of the Phase I ESA included a Site inspection and an evaluation of readily available historical information, selected environmental databases, and electronic records. The assessment identified the following RECs:

- Historical uses of the Site had affected subsurface conditions. Based on the potential for contamination identified during environmental review for a 2005 rezoning, the Property was assigned a hazardous materials and air quality E-Designation. Based on investigations conducted in 2015 and 2016, the Site entered into the BCP in 2016. Previous environmental investigations identified: fill materials containing elevated concentrations of various contaminants (primarily SVOCs and metals); groundwater containing elevated concentrations of the gasoline additive MTBE, SVOCs and metals; and VOCs, primarily those associated with chlorinated solvents, in soil vapor. In addition, a hotspot of soil exceeding hazardous waste criteria for lead was identified in 2016, and delineated in 2018.
- Computerized New York City Buildings Department (NYCDOB) records identified evidence of historical fuel oil use at the Site and a gasoline UST associated with a garage was identified on the southeastern portion of the Site n historical Sanborn maps.
- The surrounding area historically included factories, a tinsmith, a fuel oil facility, and garages and filling stations with gasoline USTs. Of note, the north-adjacent property was historically used for various factories, including a backing and coating factory, textile production and printing, lamp manufacturing, enameling, leather goods and purse production, woodcraft, and box dies manufacturing. Additionally, the regulatory database identified PBS facilities, a closed-status spill listing, and New York City Voluntary Cleanup Program (VCP) sites in close proximity to the Site.

The Phase I ESA Report also identified on-site concerns, including the potential presence of lead-based paint (LBP), suspect PCB-containing equipment and/or caulking, and/or suspect asbestos-containing materials (ACM) within the former building. The Phase I ESA Report identified a

potential for subsurface vapors, and thus a potential for vapor migration into future buildings at the Property. The Phase I ESA Report provided recommendations, including conducting remediation and development in accordance with the requirements of the NYSDEC-approved RAWP.

2.5 Remedial Action (RA) Objectives (RAOs)

The objectives for the remedial program were established through the remedy selection process stated in 6 NYCRR Part 375. A Track 4 RA was achieved. RA were performed at the Site in accordance with the NYSDEC-approved RAWP and DD, and applicable federal, state, and local rules and regulations. Detailed descriptions of the completed RA are included in the Final Engineering Report (FER). The RAOs for the Site, as listed in the DD dated December 2016, include:

Groundwater

RAOs for Public Health Protection

- Prevent ingestion of groundwater with contaminant levels exceeding drinking water standards.
- Prevent contact with, or inhalation of, volatiles from contaminated groundwater.

RAOs for Environmental Protection

- Restore groundwater aquifer to pre-disposal/pre-release conditions, to the extent practicable.
- Remove the source of groundwater contamination.

Soil/Fill

RAOs for Public Health Protection

- Prevent ingestion/direct contact with contaminated soil/fill.
- Prevent inhalation of or exposure from contaminants volatilizing from contaminants in soil/fill.

RAO for Environmental Protection

- Prevent migration of contaminants that would result in groundwater or surface water contamination.

Soil Vapor

RAOs for Public Health Protection

- Mitigate impacts to public health resulting from existing, or the potential for, soil vapor intrusion into the building at the Site.

Figures 4 and 5 show pre-remedial concentrations of soil/fill and groundwater samples above applicable UUSCOs and/or RRSCOs, and AWSQGVs. Figure 6 shows soil vapor sample concentrations.

2.6 Summary of Remedial Actions (RAs)

The following is a summary of the RAs conducted.

2.6.1 Underground Storage Tank (UST) Removal and Registration

One 550-gallon gasoline UST was encountered during remedial excavation on June 22, 2018. The UST was encountered on the south-central portion of the Site at approximately 5 feet below sidewalk grade. NYSDEC was immediately notified upon tank discovery and

was kept up to date on tank removal and associated sampling activities as they occurred. The tank was properly cleaned, removed, and disposed of off-site by a licensed tank remediation contractor. Five endpoint samples were collected from the bottom and sidewalls of the tank grave.

After remedial excavation concluded and no additional tanks were discovered, the Volunteer submitted a PBS Application to the NYSDEC to register and close the UST. The location of the former UST is shown on Figure 2.

Tank endpoint sample analytical results are included in Attached Tables 1 and 2. Tank endpoint sample analytical results exceeding UUSCOs and/or RRSCOs are presented on Figure 7.

2.6.2 Soil/Fill Excavation and Off-Site Disposal

Excavation was conducted between July 2018 and February 2019. A total of 9,143.4 cubic yards of soil/fill were excavated and disposed of off-site in accordance with applicable federal, state, and local rules and regulations. Remedial excavation depths and locations are shown on Figure 8.

In accordance with the NYSDEC-approved RAWP and DD, post-excavation endpoint samples were collected to document concentrations of contaminants of concern left in place following the remedy. Samples were collected in accordance with the frequency outlined in the RAWP. Twenty-four post-excavation endpoint samples were collected to document concentrations of target compounds in soil/fill underlying the composite cover system at the Site. Site-wide endpoint sample analytical results are included in Attached Tables 3 through 7. Site-wide endpoint sample analytical results exceeding UUSCOs and/or RRSCOs are presented on Figure 9.

2.6.3 Material Import

Approximately 400 cubic yards of virgin gas-permeable aggregate (GPA) meeting the requirements of 6 NYCRR Part 375-6.8(a) and American Society of Testing Materials (ASTM) No. 5 were imported for use as part of the composite cover system, which is shown on Figure 10.

2.6.4 Engineering Controls (ECs)

Composite Cover System

A Track 4 remedy was achieved; therefore, exposure to remaining contamination in soil/fill at the Site is prevented by a composite cover system, which was constructed across the entire Site. The composite cover system is composed of the following components, as shown on Figure 9:

- *Partial Cellar and Elevator Pit:* 6 inches of concrete underlain by GCP Preprufe® 300R vapor barrier/waterproofing, underlain by compacted subgrade.
- *Exterior Foundation Walls:* concrete foundation wall adjacent to GCP Hydroduct 220 and Bituthene 4000 vapor barrier/waterproofing, adjacent to compacted subgrade.
- *Slab-On-Grade Building:* 6 inches of concrete underlain by Stego Wrap® 20 mil vapor barrier, underlain by 4-inch diameter PVC SSDS and SVES piping in a minimum 6 inches of GPA, underlain by non-woven geotextile fabric, underlain by prepared subgrade.

- *Exterior, Open-Air Dog Run:* 6 inches of concrete underlain by GPA, underlain by a demarcation barrier (snow fence), underlain by prepared subgrade.

The locations and cross-sections of the composite cover system components are shown on Figure 10.

Vapor Mitigation Measures – Vapor Barrier and SSDS

A Grace Preprufe® 300R and Bituthene® 4000 vapor barrier membrane that meets or exceeds the ASTM E-1745 standard was installed as a Site EC below the cellar slab and along subgrade cellar sidewalls, sumps, and pits. The Grace Preprufe® 300R and Bituthene® 4000 vapor barrier membranes also act as waterproofing, as the partial cellar construction extends into the water table; therefore, installation of an SSDS below the partial cellar slab was infeasible. Stego Wrap® 120R was installed under the slab-on-grade portion of the building. GCP Hydroduct 220 and Bituthene® 4000 were installed along the exterior vertical building walls to sidewalk grade. The membranes were installed in accordance with the manufacturer's installation specifications at the locations shown on Figure 10.

An active SSDS was installed to mitigate the potential for soil vapor intrusion into the new building. The SSDS maintains a negative pressure (vacuum) beneath the entire ground floor building slab, which will allow the vapors below the concrete slab to vent without entering the building. The SSDS consists of a minimum 6-inch thick layer of GPA and horizontal trenches filled with dedicated subsurface depressurization lines consisting of 0.002-inch slot 4-inch diameter [polyvinyl chloride (PVC)] piping connected to an aboveground piping manifold, suction fan, and a vertical riser that extends through the proposed building and above the 8th floor roof to a discharge stack, as shown on Figure 11.

Treatment System – Soil Vapor Extraction (SVE) System (SVES)

An SVES was installed to remediate the contaminated vadose zone soil beneath the building on the eastern and northeastern portions of the Site and to help prevent off-site migration of chlorinated VOCs in soil vapor. The SVES consists of four SVE extraction wells (SVE-01 through SVE-04) connected via a network of sub-slab piping that leads to an aboveground equipment room containing a blower and granular activated carbon (GAC) vessels. The contaminated vapor extracted from the SVE wells will be treated and discharged to the atmosphere in accordance with the emission requirements set forth in 6NYCRR Part 212.

An SVES pilot test was performed as part of the SRI in June 2016 to confirm the observed ROI for each extraction well and evaluate appropriate blower sizing and effluent treatment of the final system design. As detailed in the SRIR, 14 observations wells screened at intervals ranging between 3 and 12 feet below surface grade, were used as monitoring points for two SVE pilot test wells at the approximate locations of SVE-01 and SVE-02 to measure induced vacuum at varying distances from both SVE wells. A vacuum reading of 0.1 inches of water (inH_2O) column was established as the minimum induced vacuum target for the monitoring points during the SVE communication testing to establish the design ROI for the respective extraction well. Using 0.1 inH_2O as the minimum induced vacuum target and an applied vacuum of 30 inH_2O, the results of the pilot test showed observed ROIs of 25 and 35 feet for SVE-01 and SVE-02, respectively.

To ensure a continuous zone of extraction across the treatment area and adequate vacuum to mobilize contamination and prevent off-site migration of soil vapor, two additional extraction wells (SVE-03 and SVE-04) were installed as part of the final system design. It

is noted that as part of construction, the Site was capped with a concrete slab, an active SSDS, and a vapor barrier. The vapor barrier and building slab act as impermeable barriers and the SSDS will create supplemental vacuum in the shallow subsurface beneath the Site to supplement the induced vacuum of the SVES.

The components and locations of the SVES are shown on Figure 11. SVES as-builts are provided in Appendix C.

2.6.5 Institutional Controls (ICs)

Environmental Easement (EE)

The imposition of an IC in the form of an EE for the Site; the Site has a series of ICs in the form of Site restrictions and requirements. The Site restrictions that apply to the Site are:

- In-ground vegetable gardens and farming on the Site are prohibited;
- Use of groundwater underlying the Site is prohibited without treatment rendering it safe for the intended purpose;
- All future activities on the Site that will disturb residual contaminated material are prohibited unless they are conducted in accordance with the soil management provisions in the SMP;
- The Site may be used for restricted residential, commercial, and industrial use only, provided the IC/ECs included in the SMP are employed;
- The Site may not be used for a higher level of use, such as unrestricted or unrestricted residential use without an amendment or extinguishment of this EE; and
- The Grantor agrees to submit to NYSDEC a written statement that certifies, under penalty of perjury, that: (1) controls employed at the Site are unchanged from the previous certification or that any changes to the controls were approved by the NYSDEC; and (2) nothing has occurred that impairs the ability of the controls to protect public health and environment or that constitute a violation or failure to comply with the SMP. NYSDEC retains the right to access the Site at any time to evaluate the continued maintenance of any and all controls. This certification shall be submitted annually, or an alternate period of time that NYSDEC may allow. This statement must be certified by an expert that the NYSDEC finds acceptable.

The EE is provided in Appendix A.

Site Management

Since post-remedial EC monitoring and sampling, and an EE were required following implementation of the remedy, this SMP, includes an IC/EC Plan and a Monitoring Plan to assess the performance and effectiveness of the remedy.

2.7 Remaining Contamination

2.7.1 Soil/Fill

Following excavation of soil/fill required to achieve a Track 4 cleanup and additional material required to install the new building foundation, 24 post-excavation endpoint samples were collected to document concentrations of compounds remaining at the Site after achievement of the remedy. The endpoint sample analytical results are included in Attached Tables 3 through 7. The endpoint sample locations and sample concentrations above respective UUSCOs and/or RRSCOs are shown on Figure 9.

2.7.2 Groundwater

Groundwater monitoring wells installed during the RI and SRI were removed during construction in accordance with applicable state regulations. Groundwater was not remediated as part of the RA and post-remedial groundwater monitoring was not required by NYSDEC. Therefore, on-site groundwater monitoring wells do not currently exist on-site.

Former RI and SRI groundwater monitoring well locations are shown on Figure 2. The RI and SRI groundwater sample analytical results collected from on- and off-site locations at concentrations above respective Ambient Water Quality Standards and Guidance Values (AWQSGVs) are shown on Figure 5.

2.7.3 Soil Vapor

Soil vapor is being mitigated and remediated as part of the RA through the ECs in place at the Site. A vapor mitigation system consisting of a vapor barrier and SSDS was installed to mitigate the potential for soil vapor intrusion into the new Site building. The SVES was installed to remediate the contaminated vadose zone soil beneath the building in the eastern and northeastern portions of the Site and to minimize the off-site migration of CVOCs in soil vapor. Post-remedial soil vapor monitoring is required under this SMP to determine the effectiveness of the ECs.

Former RI and SRI temporary soil vapor sampling point locations are shown on Figure 2. SI, RI, and SRI soil vapor sample concentrations are shown on Figure 6.

3.0 INSTITUTIONAL AND ENGINEERING CONTROL (IC AND EC) PLAN

3.1 Introduction

3.1.1 General

Since remaining contamination exists at the Site, ICs and ECs are required to protect human health and the environment. This IC/EC Plan describes the procedures for the implementation and management of all IC/ECs at the Site. The IC/EC Plan is one component of the SMP and is subject to revision by the NYSDEC.

3.1.2 Purpose

This plan provides:

- A description of all IC/ECs on the Site;
- The basic implementation and intended role of each IC/EC;
- A description of the key components of the ICs set forth in the EE;
- A description of the controls to be evaluated during each required inspection and periodic review;
- A description of plans and procedures to be followed for implementation of IC/ECs, such as the implementation of the EWP (Appendix B) for the proper handling of remaining contamination that may be disturbed during maintenance or redevelopment work on the Site;
- Any other provisions necessary to identify or establish methods for implementing the IC and ECs required by the Site remedy, as determined by NYSDEC; and
- Any work conducted pursuant to the EWP must also be conducted in accordance with the procedures defined in a HASP and associated CAMP prepared for the Site, which are provided in Appendix C.

3.2 Institutional Controls (ICs)

A series of ICs is required by the DD to: (1) implement, maintain and monitor ECs; (2) prevent future exposure to remaining contamination; and (3) limit the use and development of the Site to restricted residential, commercial, and industrial uses only. Adherence to these ICs on the Site is required by the EE and will be implemented under this SMP. ICs identified in the EE may not be discontinued without an amendment to or extinguishment of the EE. The IC boundaries are shown on Figure 2 and in the EE provided as Appendix A. The ICs are:

- The Site may be used for restricted-residential, commercial, or industrial use defined by Part 375-1.8(g), although land use is subject to local zoning laws;
- All ECs must be operated and maintained as specified in this SMP;
- All ECs must be inspected at a frequency and in a manner defined in this SMP;
- The use of groundwater underlying the Site is prohibited without necessary water quality treatment, as determined by NYSDOH and NYSDEC, to render it safe for use as drinking water or for industrial purposes and the user must first notify and obtain written approval to do so from the Department;

- Data and information pertinent to Site management must be reported at the frequency and in a manner as defined in this SMP;
- All future activities that will disturb remaining contaminated material must be conducted in accordance with this SMP;
- Monitoring to assess the performance and effectiveness of the remedy must be performed as defined in this SMP;
- Operation, maintenance, monitoring, inspection, and reporting of any mechanical or physical component of the remedy shall be performed as defined in this SMP;
- Access to the Site must be provided to agents, employees or other representatives of the State of New York with reasonable prior notice to the property owner to assure compliance with the restrictions identified by the EE;
- The potential for vapor intrusion must be evaluated for any buildings developed in the area within the IC boundaries shown on Figure 2, and any potential impacts that are identified must be monitored or mitigated; and
- In-ground vegetable gardens and farming on the Site are prohibited.

3.3 Engineering Controls (ECs)

Remaining contamination at the Site is addressed by four ECs, which are:

1. A Site-wide composite cover system.
2. A vapor barrier membrane.
3. An SSDS.
4. An SVES.

3.3.1 Composite Cover System

Exposure to remaining contamination of soil/fill at the Site is prevented by an engineered composite cover system installed across the entire Site. The composite cover system is comprised of the following components:

- *Partial Cellar and Elevator Pit:* 6 inches of concrete underlain by Grace Preprufe® 300R vapor barrier/waterproofing, underlain by compacted subgrade.
- *Exterior Partial Cellar Foundation Walls:* concrete foundation wall adjacent to Grace Preprufe® 300R vapor barrier/waterproofing, adjacent to compacted subgrade.
- *Slab-On-Grade Building:* 6 inches of concrete underlain by Stego Wrap® 20 mil vapor barrier, underlain by 4-inch PVC SSDS and SVES piping in a minimum 6 inches of GPA, underlain by non-woven geotextile fabric, underlain by prepared subgrade.
- *Exterior, Open-Air Dog Run:* 6 inches of concrete underlain by GPA, underlain by a demarcation barrier (snow fence), underlain by prepared subgrade.

Cross-section details and locations of the composite cover system are shown on Figure 10.

The EWP provided in Appendix B outlines the procedures required in the event the composite cover system is breached, penetrated, and/or temporarily removed; and any underlying remaining contamination is disturbed. Procedures for the inspection of the Cover System are provided in the Monitoring and Sampling Plan included in Section 4.0

of this SMP. Any work conducted pursuant to the EWP must also be conducted in accordance with the procedures defined in a Health and Safety Plan (HASP) and associated Community Air Monitoring Plan (CAMP) prepared for the Site, provided in Appendix D.

3.3.2 Vapor Barrier and Waterproofing Membranes

Waterproofing and vapor barrier membrane were installed beneath the Site building slabs. A Grace Preprufe® 300R and Bituthene® 4000 vapor barrier membrane that meets or exceeds the ASTM E-1745 standard was installed as a Site EC below the cellar slab and along subgrade cellar sidewalls, sumps, and pits. The Grace Preprufe® 300R and Bituthene® 4000 vapor barrier membranes also act as waterproofing, as the partial cellar construction extends into the water table; therefore, installation of an SSDS below the partial cellar slab was infeasible. Stego Wrap® 120R was installed under the slab-on-grade portion of the building. GCP Hydroduct 220 and Bituthene® 4000 were installed along the exterior vertical building walls to sidewalk grade. The membranes were installed in accordance with the manufacturer's installation specifications at the locations shown on Figure 10.

3.3.3 Sub-Slab Depressurization System (SSDS)

An active SSDS was installed below the slab-on-grade (parking garage) portion of the Site to mitigate the potential for soil vapor intrusion into the new Site building. The target area for the SSDS comprises the slab-on-grade portion of the proposed Site building, which excludes a narrow exterior concrete-paved area along the northwestern portion of the Site and the partial cellar on the southwestern portion of the Site, which was installed into the groundwater table. The SSDS maintains a negative pressure by inducing vacuum underneath the entire ground floor slab, allowing vapors to vent above the Site building roof without entering the building. The SSDS consists of a network of subgrade 4-inch, Schedule 40 slotted and solid PVC piping installed within a minimum 6-inch thick layer of GPA layer, all of which is underlain by non-woven geotextile fabric. The subgrade piping penetrates the slab within the ground floor, centrally-located mechanical room and is subsequently manifolded into a solid, 6-inch Schedule 40 chlorinated PVC (CPVC) solid riser, leading from a blower and vertically through the building to an exhaust stack located on the 8th floor roof.

The major components of the SSDS include:

- Four horizontal 4-inch diameter 0.020-inch slotted and solid PVC pipe runs;
- A minimum 6-inch layer of ¾-inch GPA stone bedding under, around, and above all SSDS piping;
- Three vacuum monitoring points (VMPs) (MP-01 through MP-03);
- A fan capable of operating at 10 in.H_2O and 300 standard cubic feet per minute (SCFM) air flow rate; and
- A 6-inch CPVC riser pipe extending from the ground floor parking garage to an exhaust stack on the 8th floor roof.

The location and components of the SSDS are shown on Figure 11. As-built drawings of the SSDS are provided in Appendix C. Procedures for monitoring the SSDS are documented in the Site Monitoring Plan (Section 4.0 of this SMP).

3.3.4 Soil Vapor Extraction (SVE) System (SVES)

An SVES was installed to remediate the vadose zone beneath the building on the eastern and northeastern portion of the Site and to help prevent the off-site migration of contaminated soil vapor. The target area for the SVES is the vadose zone, which is the unsaturated soil above the groundwater table, in an approximately 7,000-square foot area located on the eastern and northeastern portions of the Site. The SVES, in combination with the vapor barrier and SSDS, will help to prevent potential soil vapor intrusion into the new building. Based on the findings of the June 2016 pilot test, the SVES will be capable of operating the four SVE wells at an approximate maximum applied vacuum of 30 inches of water (inH_2O) and approximate air flow rate of 75 CFM per SVE well. The SVES maintains a negative pressure in a radius around each of the four SVE extraction wells to extract and treat contaminated vapors.

The major components of the SVES include:

- Four 4-inch diameter PVC SVE wells (SVE-01 through SVE-04), each constructed with 0.020-inch slotted well screen from 3.5 feet below grade to between 9 and 9.5 feet below the bottom of the concrete slab-on-grade; and
- Four runs of 4-inch diameter solid PVC piping connecting each individual SVE wells to enter into a mechanical room on the central portion of the Site.
- A blower capable of operating at 95 inH_2O and 400 SCFM;
- Two (2) 400-pound GAC vessels connected in series to treat vapors from the SVES; and
- A 6-inch CPVC riser pipe extending from the ground floor parking garage to an exhaust stack on the 8th floor roof.

The location and components of the SVES are shown on Figure 11. As-built drawings of the SVES are provided in Appendix C. Procedures for monitoring the SVES are documented in the Site Monitoring Plan (Section 4.0 of this SMP).

3.3.5 Criteria for Completion of Remediation/Termination of Engineering Controls

Generally, remedial processes are considered completed when monitoring indicates that the remedy has achieved the RAOs identified by the DD. The framework for determining when remedial processes are complete is provided in Section 6.4 of NYSDEC DER-10. Disturbance of the composite cover system or EC components is prohibited by the EE.

3.3.5.1 Composite Cover System

The composite cover system is a permanent control and the quality and integrity of the system will be inspected at defined, regular intervals in accordance with this SMP in perpetuity.

3.3.5.2 Sub-Slab Depressurization System (SSDS)

Operation of the active SSDS will not be discontinued unless prior written approval is granted by the NYSDEC and NYSDOH. In the event that monitoring data indicates that the SSDS may no longer be required to operate actively, a proposal to operate the SSDS in a passive state will be submitted by the remedial party to the NYSDEC and NYSDOH, or their successor agencies handling environmental issues in NYS.

3.3.5.3 Soil Vapor Extraction System (SVES)

In the event that monitoring data indicates that the SVES may no longer be required, a proposal to discontinue the system will be submitted by the remedial party. Conditions that may warrant discontinuing the SVES include contaminant concentrations in soil vapor that: (1) have become asymptotic to a low level over an extended period of time, as accepted by NYSDEC; or (2) NYSDEC has determined that the SVES has reached the limit of its effectiveness. The SVES will remain in place and operational until permission to discontinue its use is granted in writing by NYSDEC and NYSDOH, or their successor agencies handling environmental issues in NYS.

3.4 Excavation Work Plan (EWP)

The Site has been remediated for restricted residential, commercial, and industrial use. Any future intrusive work that will penetrate the composite cover system, or encounter or disturb the remaining contamination, including any modifications or repairs to the existing composite cover system, will be performed in compliance with the EWP, provided as Appendix B. Any work conducted pursuant to the EWP must be conducted in accordance with the procedures defined in a HASP and CAMP (Appendix D), and will be included in the periodic inspection and certification reports for the Site.

3.5 Health and Safety Plan (HASP) and Community Air Monitoring Plan (CAMP)

Any work conducted pursuant to the EWP must be conducted in accordance with the procedures defined in the HASP and CAMP prepared for the Site. The HASP was prepared in accordance with DER-10 and 29 CFR 1910, 29 CFR 1926, and all other applicable federal, state and local regulations. Based on future changes to state and federal health and safety requirements, and specific methods employed by future contractors, the HASP and CAMP would be updated and re-submitted with a notification to NYSDEC as detailed in the EWP.

The Site owner and associated parties preparing the remedial documents submitted to the state and parties performing the work are completely responsible for the safe performance of all intrusive work, the structural integrity of excavations, proper disposal of excavation dewatering, control of runoff from open excavations into remaining contamination, and for structures that may be affected by excavations (such as building foundations and footings). The Site owner will ensure that Site development activities will not interfere with, or otherwise impair or compromise, the ECs described in this SMP.

The HASP and CAMP are provided in Appendix D.

4.0 MONITORING AND SAMPLING PLAN

4.1 Introduction

4.1.1 General

This Monitoring and Sampling Plan describes the measures for evaluating the overall performance and effectiveness of the remedy. This Monitoring and Sampling Plan may be revised only with the approval of the NYSDEC. Details regarding the sampling procedures, data quality usability objectives, analytical methods, etc. for all samples collected as part of Site management for the Site are included in the QAPP provided as Appendix E.

4.1.2 Purpose and Schedule

This Monitoring and Sampling Plan describes the methods to be used for:

- Sampling locations, protocol and frequency;
- Information on all designed monitoring systems; and
- Annual inspection and periodic certification.

Reporting requirements are provided in Section 7.0 of this SMP.

4.2 Site-Wide Inspection

Site-wide inspections will be performed at a minimum of once per year, beginning no more than 18 months after receipt of COC. Modification to the frequency or duration of the inspections will require approval from the NYSDEC. Site-wide inspections will be performed additionally after all severe weather conditions that may affect ECs or monitoring devices. During the inspections, an inspection form will be completed. The inspection form is provided in Appendix F – Site Management Forms. The form will compile sufficient information to assess the following:

- Compliance with all ICs, including Site usage;
- An evaluation of the condition and continued effectiveness of ECs;
- General Site conditions at the time of the inspection;
- The Site management activities being conducted including, where appropriate, confirmation sampling and a health and safety inspection; and
- Confirm that Site records are up to date.

Inspections of all remedial components installed at the Site will be conducted. A comprehensive Site-wide inspection will be conducted and documented according to the SMP schedule, regardless of the frequency of the PRR. The inspections will determine and document the following:

- Whether ECs continue to perform as designed;
- If these controls continue to be protective of human health and the environment;
- Compliance with requirements of this SMP and the EE;
- Achievement of remedial performance criteria; and
- If Site records are complete and up to date.

Unscheduled inspections and/or sampling may take place when a suspected failure of the EC system has been reported or an emergency occurs that is deemed likely to affect the operation of

the system. If an emergency, such as a natural disaster or an unforeseen failure of any of the ECs occurs that reduces or has the potential to reduce the effectiveness of ECs in place at the Site, verbal notice to the NYSDEC must be given by noon of the following day. In addition, an inspection of the Site will be conducted within five days of the event to verify the effectiveness of the IC/ECs implemented at the Site by a QEP, as determined by the NYSDEC. Written confirmation must be provided to the NYSDEC within 7 days of the event that includes a summary of actions taken, or to be taken, and the potential impact to the environment and the public.

Reporting requirements are outlined in Section 7.0 of this SMP. Inspections will also be performed in the event of an emergency.

4.3 Monitoring and Sampling Protocol

Since residual contaminated media exists in the Site subsurface, ECs and ICs are required to protect human health and the environment.

4.3.1 Composite Cover System

Monitoring of the composite cover system will occur on an annual basis as long as the EE is in effect to ensure the system's integrity. Monitoring will consist of a visual inspection to evaluate the structural integrity of the concrete slabs, support columns into the floors, and the wall joints. If any cracks or openings are identified, they will be screened for organic vapors with a photoionization detector (PID) and any readings will be noted. In addition, any cracks or openings in the floor will be properly sealed. The results of the inspection will be included in the PRR. In addition, the composite cover system must be inspected and certified any time a disturbance in the system occurs. The composite cover system does not require any special operation or maintenance activities.

If the system is breached during future construction activities, the system will be rebuilt by reconstructing the system according to the original design and tying newly constructed cover layers into existing cover layers to form a continuous layer(s).

The inspection frequency is subject to change with the approval of the NYSDEC. Unscheduled inspections and/or sampling may take place when a suspected failure of the composite cover system has been reported or an emergency occurs that is deemed likely to affect the operation of the system.

4.3.2 Sub-Slab Depressurization System (SSDS)

The operation of the SSDS will be confirmed by two different levels of inspections identified as "routine" or "detailed", to be performed by appropriate personnel. An inspection of the SSDS will be performed quarterly (following system startup) to confirm the system is operating within design specifications. A round of baseline monitoring will also be conducted following the complete installation of the system. SSDS system components to be monitored include, but are not limited to, the components shown in In-Text Table 5.

In-Text Table 5 – SSDS Monitoring Parameters

Remedial System	Inspection Schedule	Monitoring Parameter	Operating Range
SSDS	Quarterly	Flow Rate (individual Manifold legs)	20 to 100 CFM
		Applied Vacuum Reading (blower)	1 to 9.5 inches of H_2O
		Applied Vacuum Reading (individual manifold legs)	1 to 9.5 inches of H_2O
		Induced Vacuum (vacuum monitoring points)	a minimum of 0.004 inches of H_2O

Detailed SSDS inspection, monitoring, and reporting procedures are provided in Section 5.0 - Operation and Maintenance Plan. Unscheduled inspections and/or sampling may take place when a suspected failure of the SSDS has been reported or an emergency occurs that is deemed likely to affect the operation of the system.

If any equipment readings are not within their specified operation range, any equipment is observed to be malfunctioning, or the system is not performing within specifications, maintenance and repair will be conducted immediately in accordance with the O&M Plan.

4.3.3 Soil Vapor Extraction System (SVES)

The operation of the SVES will be confirmed by two different levels of inspections identified as "routine" or "detailed", to be performed by appropriate personnel. An inspection of the SVES will be performed monthly to confirm the system is operating within design specifications. A round of baseline monitoring will also be conducted following the complete installation of the system. SVES components to be monitored include, but are not limited to, the components shown in In-Text Table 6.

In-Text Table 6 – SVES Monitoring Parameters

Remedial System	Inspection Schedule	Monitoring Parameter	Operating Range
SVES	Monthly	Flow Rate (individual manifold legs)	20 to 200 CFM
		Vacuum Reading (Blower)	27.5 to 55 inches of H_2O
		Vacuum Reading (individual manifold legs)	5 to 25 inches of H_2O
		Pre- and Post-GAC PID Reading	Pre-GAC: N/A; Post-GAC: < Pre-GAC PID

Detailed SVES inspection, monitoring, and reporting procedures are provided in Section 5.0 - Operation and Maintenance Plan. Unscheduled inspections and/or sampling may take place when a suspected failure of the SVES has been reported or an emergency occurs that is deemed likely to affect the operation of the system.

If any equipment readings are not within their specified operation range, any equipment is observed to be malfunctioning or the system is not performing within specifications, maintenance and repair will be conducted immediately in accordance with the O&M Plan.

4.3.4

4.3.4 Sampling Frequency, and Sample Collection and Analysis

Samples will be collected from the influent and effluent of the SVES after system startup, quarterly for the first year, and annually thereafter to determine baseline VOC concentrations, monitor mass removal over time, and monitor the effectiveness of the GAC treatment vessels. SVES sampling information is provided in In-Text Table 7 – SVES Sampling Parameters and Schedule.

In-Text Table 7 – SVES Sampling Parameters and Schedule

Sampling Component	Sampling Schedule	Analytical Parameter
Influent and Effluent Vapor	Quarterly for 1 year, then annually thereafter	TO-15 VOCs, Tedlar® Bag

Any modification to the frequency or sampling requirements will require approval from the NYSDEC. All sampling activities will be recorded in a field book and associated sampling log. Samples will be submitted to a NYSDOH ELAP-certified laboratory for analysis of VOCs by EPA Method TO-15.

Field observations (e.g., potential VOC sources, etc.) will be noted on a sampling log, which will be subject to the reporting requirements and system checks. Complete vapor sampling procedures are detailed in the QAPP (Appendix E). All sampling activities and field observations (e.g., potential VOC sources, etc.) will be recorded in a field book and on field logs, which will be created after installation of the aboveground system components and included in the inaugural PRR.

Carbon Change Out and Disposal Protocol

Based on the pilot testing conducted prior to system design, it was conservatively estimated that the SVES will use approximately 353 pounds of carbon per month during initial operation and should decrease substantially with time.

All spent carbon will be disposed of or recycled off-site in accordance with all applicable state and federal regulations. Based on requirements of the disposal/recycling facility and waste disposal contractor, a carbon sample may need to be collected for facility acceptance purposes. If required, a representative grab sample of the spent carbon will be collected and submitted for laboratory analysis, as detailed in the QAPP provided as Appendix E.

4.4 Monitoring Reporting Requirements

All monitoring and sampling activities will be recorded in a field book and associated sampling log as provided in Appendix F – Site Management Forms. Other observations (e.g., SVE extraction well and VMP integrity, etc.) will be noted on the sampling log. The sampling log will serve as the inspection form for the monitoring network.

5.0 OPERATION AND MAINTENANCE (O&M) PLAN

5.1 Introduction

This O&M Plan provides a brief description of the measures necessary to operate, monitor and maintain the mechanical components of the remedy selected for the Site, which include the SSDS and SVES. This O&M Plan:

- Includes the procedures necessary to allow individuals unfamiliar with the Site to operate and maintain the SSD/SVES; and
- Will be updated periodically to reflect changes in Site conditions or the manner in which the SSDS/SVES are operated and maintained.

The following sections provide a description of the O&M of the SSDS and SVES. Cut-sheets and as-built drawings, and maintenance and operating manuals for SSDS and SVES are included in Appendix D. A copy of this O&M Plan, along with the complete SMP, is to be maintained at the Site at all times. This O&M Plan is not to be used as a standalone document, but as a component of this SMP.

5.2 SSDS

Intrusion of contaminated soil vapor (if any) from the subsurface to the Site building's interior is prevented by an SSDS, which applies negative pressure (vacuum) beneath the slab-on-grade portion of the Site building to collect and discharge the vapor to the atmosphere above the roof of the 8th floor building roof. The Site-specific design for the SSDS was developed based on elevated concentrations of VOCs detected during previous soil vapor sampling events completed as part of the RI, delineation sampling, and SRI, and was designed to maintain a minimum 0.004 inH_2O.

The major components of the SSDS include:

- Four horizontal 4-inch diameter 0.020-inch slotted and solid PVC pipe runs;
- A minimum 6-inch layer of ¾-inch GPA stone bedding under, around, and above all SSDS piping;
- Three VMPs (MP-01 through MP-03);
- A fan capable of operating at 10 in.H_2O and 300 SCFM air flow rate; and
- A 6-inch CPVC riser pipe extending from the ground floor parking garage to an exhaust stack on the 8th floor roof.

The SSDS is designed to operate continuously, 24 hours a day, 7 days a week, 365 days a year, without any required adjustments or repairs, beyond the routine maintenance items discussed in this SMP. Manufacturer's specifications for each of the SSDS components are included in Appendix D. The SSDS as-built drawings are provided in Appendix D.

5.2.1 SSDS Start-Up and Testing

After installation of the aboveground components of the SSDS, system startup will occur. Startup shall comprise vacuum, temperature, and pressure gauge readings for the SSDS influent lines, blower accessory readings including variable frequency drive (VFD) settings, pre- and post-blower particulate filters vacuum and air flow rate readings, sample port VOC screening, vacuum balancing, and system alarm checks.

Specifically, the following inspections and testing will be performed to ensure the system is balanced:

- Confirmation of acceptable air flow rate from each of the SSDS pipe runs by a visual inspection of gauges affixed to each of the manifold legs;
- Confirmation of acceptable vacuum readings from each of the SSDS runs by a visual inspection of gauges affixed to each of the manifold legs and use of an appropriate manometer or portable vacuum gauging device; and
- Confirmation of acceptable induced vacuum beneath the entire ground floor slab from monitoring points MP-1 through MP-3 through the manual access of each point and use of an appropriate manometer or portable vacuum gauging device.

5.2.2 SSDS Routine System Inspection

The routine SSDS inspection check will consist of a visual inspection noting the individual flow rate and vacuum readings for each of the SSDS riser legs. The routine check will also note any alarms or unusual conditions (e.g., unusual odors, leaks, blower noise etc.). Typical routine maintenance items that should be addressed during these inspections include:

- Confirmation that the blower is operating and air is discharging through the exhaust piping to the roof;
- Confirmation that the gauges on each manifold leg are clean and within normal ranges; and
- Confirmation that the exterior of the SSDS control panel is clean.

In the event than an unusual condition is identified, a key contact listed in In-Text Table 3 of this SMP will be notified. Any maintenance completed for the SSDS should be documented in the Maintenance Log included as part of Appendix F.

5.2.3 SSDS Operation and Maintenance

Operation of the SSDS will be monitored in accordance with the frequency and detail set forth in In-Text Table 8. Monitoring of the SSDS will consist of a visual inspection of the complete system including checking to confirm that the SSDS blower is operating properly, observing all associated air flow and vacuum gauges and alarms to confirm system diagnostics, and identification and repair of any system malfunctions or problems (i.e., leaks, cracks, collection of condensation, etc.).

In-Text Table 8 – SSDS Routine and Detailed Inspection Schedule

Monitoring Inspection or Sampling Type	Frequency	Maintenance Task
SSDS Routine Operations Inspection	Quarterly	System Inspections
SSDS Detailed Operation Inspection	Semi-annually	System Components

The SSDS will operate continuously at the Site and not be discontinued without written approval by NYSDEC and NYSDOH. The SSDS will remain in place and operational until permission to discontinue use is granted in writing by NYSDEC and NYSDOH.

System Component Maintenance:

The detailed operations check will be performed to identify/rectify operations-based maintenance items, such as malfunctioning SSDS risers, piping runs, and/or other system

components. Typical detailed maintenance items that should be addressed during these inspections include:

- Confirm/assess blower performance and integrity;
- Assess blower and determine need for replacement;
- Confirm/assess the operating condition of vacuum monitoring points MP-1 though MP-3; and
- Confirm/assess the structural integrity of concrete floor slabs overlying constructed SSDS manifold and piping runs.

In the event that a condition warranting system component maintenance or repair is identified, the appropriate reporting and maintenance should be conducted immediately. Manufacturer's recommendations for system component maintenance and maintenance logs are included in Appendices C and F.

5.2.4 SSDS Non-Routine Checks and Equipment Maintenance

In most instances, non-routine maintenance will be required due to operating conditions that are governed by the SSDS alarms and system telemetry, which will operate on a dedicated internet connection connected to the building management system (BMS). The primary objective of system telemetry is to notify personnel when operating conditions are likely to reduce or otherwise compromise efficiency, which could lead to the uncontrolled intrusion contaminated soil vapor into the Site building.

In the event that low SSDS air flow rates or vacuum are observed anywhere in the system, further system balancing may be necessary following moisture removal, to ensure that the combined air flow rates and vacuum in a given area of the Site achieve the minimum design requirements. Throttling valves for individual SSDS lines are located on the manifold legs in Appendix C.

5.2.5 Monitoring Devices and Alarms

The SSDS has a warning alarm to indicate that the system is not operating properly (e.g., vacuum blower failure or a low vacuum condition at the blower). In the event that a warning alarm is activated, applicable maintenance and repairs will be conducted, as specified in this O&M Plan, and the SSDS will be restarted. Operational problems will be noted in the Periodic Review Report (PRR) prepared for that reporting period.

5.3 SVES

To ensure a continuous zone of extraction across the treatment area and adequate vacuum to mobilize contamination and prevent off-site migration of soil vapor, two additional extraction wells will be installed as part of the final system design. It is noted that as part of construction, the Site will be capped with a concrete slab and an active SSDS, and a vapor barrier. The vapor barrier and building slab will act as impermeable barriers and the SSDS will create supplemental vacuum in the shallow subsurface beneath the Site to supplement the induced vacuum of the SVES. Details of the SVE pilot test, data analysis, and design for the system inclusive of the final blower specifications, locations of the two additional extraction wells, and final system components will be established in the RAWP.

The major components of the SVES include:

- Four 4-inch diameter PVC SVE extraction wells (SVE-01 through SVE-04), each constructed with 0.020-inch slotted well screen from 3.5 feet below grade to between 9 and 9.5 feet below the bottom of the concrete slab-on-grade; and
- Four runs of 4-inch diameter solid PVC piping connecting each individual SVE wells to enter into a mechanical room on the central portion of the Site.
- A blower capable of operating at 95 inH_2O and 400 SCFM;
- Two (2) 400-pound GAC vessels connected in series to treat vapors from the SVES; and
- A 6-inch CPVC riser pipe extending from the ground floor parking garage to an exhaust stack on the 8th floor roof.

The SVES is designed to operate continuously, 24 hours a day, 7 days a week, 365 days a year, without any required adjustments or repairs, beyond the routine maintenance items discussed herein. Manufacturer's specifications for each of the SVES components are included in Appendix C.

5.3.1 SVES Start-Up and Testing

After installation of the aboveground components of the SVES, system startup will occur. Startup shall comprise vacuum, temperature, and pressure gauge readings for the SVES influent lines, blower accessory readings including variable frequency drive (VFD) settings, pre- and post-blower particulate filters vacuum and air flow rate readings, pre- and post-GAC treatment, and granular-activated carbon (GAC) VOC screening, and system alarm checks.

Specifically, the following inspections and testing will be performed to ensure the system is balanced:

- Confirmation of acceptable air flow rate from each of the SVES pipe runs by a visual inspection of gauges affixed to each of the manifold legs;
- Confirmation of acceptable vacuum readings from each of the SVES piping runs by a visual inspection of gauges affixed to each of the manifold legs and use of an appropriate manometer or portable vacuum gauging device; and
- Confirmation of acceptable induced vacuum at each of the SVE extraction wells (SVE-01 through SVE-04) through the manual access of each point and use of an appropriate manometer or portable vacuum gauging device.

5.3.2 SVES Routine System Inspection

The routine SVES inspection check will consist of a visual inspection noting the individual flow rate and vacuum readings for each of the SVES riser legs. The routine check will also note any alarms or unusual conditions (e.g., unusual odors, leaks, blower noise etc.). Typical routine maintenance items that should be addressed during these inspections include:

- Confirmation that the blower is operating and air is discharging through the exhaust piping to the roof;
- Confirmation that the gauges on each manifold leg are clean and within normal ranges; and

- Confirmation that the exterior of the SVES control panel is clean.

In the event than an unusual condition is identified, notify a key contact listed in In-Text Table 3 of this SMP. Any maintenance completed for the SSDS will be documented in the Maintenance Log included as part of Appendix F.

5.3.3 SVES Routine Operation and Maintenance

Operation of the SVES will be monitored in accordance with the frequency and detail set forth in In-Text Table 9. Monitoring of the SVES will consist of a visual inspection of the complete system including checking to confirm that the SVES blower is operating properly, observing all associated air flow and vacuum gauges and alarms to confirm system diagnostics, and identification and repair of any system malfunctions or problems (i.e., leaks, cracks, collection of condensation, etc.). If the PID screening and/or sampling show breakthrough of the GAC vessels, the media will be replace and the spent media will be properly recycled and/or disposed of off-site.

In-Text Table 9 – SVES Routine and Detailed Inspection Schedule

Monitoring Inspection or Sampling Type	Frequency	Maintenance Task
SVES Routine Operations Inspection	Monthly	System Inspections
SVES Detailed Operation Inspection	Quarterly	System Components

The SVES will operate continuously at the Site and not be discontinued without written approval by NYSDEC and NYSDOH. The SSDS will remain in place and operational until permission to discontinue use is granted in writing by NYSDEC and NYSDOH.

System Component Maintenance:

The detailed operations check will be performed to identify/rectify operations-based maintenance items, such as malfunctioning SSDS risers, piping runs, GAC breakthrough, and/or other system components. Typical detailed maintenance items that should be addressed during these inspections include:

- Confirm/assess blower performance and integrity;
- Assess blower and determine need for replacement;
- Assess GAC and determine need for replacement;
- Confirm/assess the operating condition of SVE extraction wells SVE-01 through SVE-04; and
- Confirm/assess the structural integrity of concrete floor slabs overlying constructed SVES manifold and piping runs.

In the event that a condition warranting system component maintenance or repair is identified, the appropriate reporting and maintenance will be conducted immediately. Manufacturer's recommendations for system component maintenance and maintenance logs are included in Appendices C and F.

5.3.4 SVES Non-Routine Checks and Equipment Maintenance

In most instances, non-routine maintenance will be required due to operating conditions that are governed by the SSDS alarms and system telemetry, which will operate on a dedicated internet connection connected to the building management system (BMS). The primary objective of system telemetry is to notify personnel when operating conditions are likely to reduce or otherwise compromise efficiency.

In the event that low SVES air flow rates or vacuum are observed anywhere in the system, further system balancing may be necessary following moisture removal, to ensure that the combined air flow rates and vacuum in a given area of the Site achieve the minimum design requirements. Throttling valves for individual SVES lines are located on the manifold legs.

5.3.5 Monitoring Devices and Alarms

The SVES has a warning alarm to indicate that the system is not operating properly (e.g., high temperature, vacuum blower failure, or a low vacuum condition at the blower). In the event that a warning alarm is activated, applicable maintenance and repairs will be conducted, as specified in this O&M Plan, and the SVES will be restarted. Operational problems will be noted in the PRR to be prepared for that reporting period.

6.0

6.0 PERIODIC ASSESSMENTS/EVALUATIONS

6.1 Climate Change Vulnerability Assessment

Increases in both the severity and frequency of storms/weather events, an increase in sea level elevations along with accompanying flooding impacts, shifting precipitation patterns and wide temperature fluctuation, resulting from global climactic change and instability, have the potential to significantly impact the performance, effectiveness and protectiveness of a given Site and associated remedial systems. Vulnerability assessments provide information so that the Site and associated remedial systems are prepared for the impacts of the increasing frequency and intensity of severe storms/weather events and associated flooding.

This section provides a summary of vulnerability assessments that will be conducted for the Site during periodic assessments, and briefly summarizes the vulnerability of the Site and/or ECs to severe storms/weather events and associated flooding.

- *Flood Plain:* The Site does not lie within the 100- or 500-year flood plain.
- *Site Drainage and Stormwater Management:* Stormwater in the Site vicinity flows to the NYC combined sewer system. Additionally, a stormwater detention system was installed beneath the Site building to manage excess stormwater during periods of heavy precipitation and/or snowmelt.
- *Erosion:* As the entire Site is capped with an impermeable concrete slab, erosion is not anticipated to be an issue of concern.
- *High Wind:* All components of the building are secured; therefore, high winds are not likely to affect the Site. In the event of high winds, proper precautions will be taken to secure any objects on-site that are not secured to the building.
- *Electricity:* Electricity to the building is supplied to the building via underground conduits; therefore, severe weather events are not likely to affect electricity service to the Site.
- *Spill Containment/Release:* Storage of large amounts of fuel oil, chemicals, etc. is not expected. Small amounts of cleaning chemicals will be stored in various locations throughout the building, but are not expected to be affected by storm-related damage to the building.

6.2 Green Remediation Evaluation

NYSDEC's DER-31 Green Remediation requires that green remediation concepts and techniques be considered during all stages of the remedial program including Site management, with the goal of improving the sustainability of the cleanup and summarizing the net environmental benefit of any implemented green technology. This section of the SMP provides a summary of any green remediation evaluations to be completed for the Site during Site management, and as reported in the PRR.

6.2.1 Green Remediation Evaluation Building Operations

Structures on-site will be operated and maintained to provide for the most efficient operation of the remedy, while minimizing energy, waste generation, and water consumption.

6.2.2 Timing of Green Remediation Evaluations

For major remedial system components (SSDS and SVES), green remediation evaluations and corresponding modifications will be undertaken as part of a formal RSO, or at any time

that the NYSDEC project manager feels appropriate, e.g. during significant maintenance events or in conjunction with storm recovery activities.

Modifications resulting from green remediation evaluations will be implemented and scheduled to occur as requested by the NYSDEC project manager during planned/routine operation and maintenance activities. Reporting of these modifications will be presented in the PRR.

6.2.3 Remedial Systems

Remedial systems (SSDS and SVES) will be operated properly considering the current Site conditions to conserve materials and resources to the greatest extent possible. Consideration will be given to operating rates and use of reagents and consumables. Spent materials (i.e. spent activated carbon) will be sent for recycling, as appropriate.

6.2.4 Building Operations

On-Site structures will be operated and maintained to provide for the most efficient operation of the remedy, while minimizing energy, waste generation, and water consumption.

6.2.5 Frequency of System Checks, Sampling and Other Periodic Activities

Transportation to and from the Site and use of consumables in relation to visiting the Site in order to conduct system checks and or collect samples and shipping samples to a laboratory for analyses have direct and/or inherent energy costs. The schedule and/or means of these periodic activities have been prepared so that these tasks can be accomplished in a manner that does not impact remedy protectiveness but reduces expenditure of energy or resources.

6.3 Remedial System Optimization (RSO)

A RSO study will be conducted any time NYSDEC or the remedial party requests in writing that an in-depth evaluation of the remedy is needed. An RSO may be appropriate if any of the following occur:

- The RA have not met or are not expected to meet RAOs in the time frame estimated in the DD;
- The management and operation of the remedy is exceeding the estimated costs;
- The remedial system is not performing as expected or as designed;
- Previously unidentified source material may be suspected;
- Plume shift has potentially occurred;
- Site conditions change due to development, change of use, change in groundwater use, etc.;
- There is an anticipated transfer of the Site management to another remedial party or agency; and
- A new and applicable remedial technology becomes available.

An RSO will provide a critique of the Site conceptual model, give a summary of past performance, document current cleanup practices, summarize progress made toward the Site's cleanup goals, gather additional performance or media specific data and information and provide recommendations for improvements to enhance the ability of the present system to reach RAOs or to provide a basis for changing the remedial strategy.

The RSO study will focus on overall Site cleanup strategy, process optimization and management with the intent of identifying impediments to cleanup and improvements to Site operations to increase efficiency, cost effectiveness and remedial time frames. Green remediation technology and principals are to be considered when performing the RSO.

7.0 REPORTING REQUIREMENTS

7.1 Site Management Reports

Site management inspection, maintenance and monitoring events will be recorded on the appropriate Site management form provided in Appendix F. These forms are subject to NYSDEC revision.

All applicable inspection forms and other records, including media sampling data and system maintenance reports, generated for the Site during the reporting period will be provided in electronic format to the NYSDEC in accordance with the requirements listed in In-Text Table 10 and included in the PRR:

In-Text Table 10 - Schedule of Interim Monitoring/Inspection Reports

Task/Report	Reporting Frequency[1, 2]
SSDS Inspection Report	Semi-Annually
SVES Inspection Report	Quarterly
Site-Wide Cover System Inspection Report	Annually
Periodic Review Report	Annually, or as otherwise determined by the NYSDEC
SSDS Maintenance Report	Following Maintenance Event

[1] Reports will be submitted within 45 days of completion of the inspection, monitoring, and/or maintenance event (unless otherwise required by NYSDEC). Reports will be submitted to NYSDEC as a stand-alone report or included as an attachment in the PRR if an inspection/monitoring/maintenance event is completed with 45 days of a PRR submission.
[2] A baseline SSDS/SVES inspection will be conducted following systems startup. Post-remediation periodic monitoring and reporting will commence in accordance with the frequencies above (following the issuance of the COC).

All interim monitoring/inspections reports will include, at a minimum:

- Date of event or reporting period;
- Name, company, and position of person(s) conducting monitoring/inspection activities;
- Description of the activities performed;
- Where appropriate, color photographs or sketches showing the approximate location of any problems or incidents noted (included either on the checklist/form or on an attached sheet);
- Type of samples collected (e.g., SVES vapor);
- Copies of all field forms completed (e.g., sampling logs, chain-of-custody documentation, etc.);
- Sampling results in comparison to appropriate standards/criteria;
- A figure illustrating sample type and sampling locations;
- Copies of all laboratory data sheets and the required laboratory data deliverables required for all points sampled (to be submitted electronically in the NYSDEC-identified format);
- Any observations, conclusions, or recommendations; and
- A determination as to whether contaminant conditions have changed since the last reporting event.

Routine maintenance event reporting forms will include, at a minimum:

- Date of event;
- Name, company, and position of person(s) conducting maintenance activities;
- Description of maintenance activities performed;
- Any modifications to the system;
- Where appropriate, color photographs or sketches showing the approximate location of any problems or incidents noted (included either on the checklist/form or on an attached sheet); and,
- Other documentation such as copies of invoices for maintenance work, receipts for replacement equipment, etc., (attached to the checklist/form).

Non-routine maintenance event reporting forms will include, at a minimum:

- Date of event;
- Name, company, and position of person(s) conducting non-routine maintenance/repair activities;
- Description of non-routine activities performed;
- Where appropriate, color photographs or sketches showing the approximate location of any problems or incidents (included either on the form or on an attached sheet); and
- Other documentation such as copies of invoices for repair work, receipts for replacement equipment, etc. (attached to the checklist/form).

Data will be reported in digital format as determined by the NYSDEC. Currently, data is to be supplied electronically and submitted to the NYSDEC Environmental Quality Information System (EQuIS)™ database in accordance with the requirements found at http://www.dec.ny.gov/chemical/62440.html.

7.2 Periodic Review Report (PRR)

A PRR will be submitted to the Department beginning eighteen (18) months after the Certificate of Completion (CoC) is issued. After submittal of the initial PRR, the next PRR shall be submitted annually to the Department, or at another frequency as may be required by the Department. In the event that the Site is subdivided into separate parcels with different ownership, a single PRR will be prepared that addresses the Site described in Appendix A - Environmental Easement. The PRRs will be prepared in accordance with NYSDEC's DER-10 and submitted within 30 days of the end of each certification period. Media sampling results will also be incorporated into the PRR. The report will include:

- Identification, assessment, and certification of all ECs/ICs required by the remedy for the Site.
- Results of the required annual Site inspections and severe condition inspections, if applicable.
- All applicable Site management forms and other records generated for the Site during the reporting period in the NYSDEC-approved electronic format, if not previously submitted.
- A summary of any discharge monitoring data and/or information generated during the reporting period, with comments and conclusions.
- Data summary tables and graphical representations of contaminants of concern by media (indoor air, soil vapor, etc.), which include a listing of all compounds analyzed, along with the

applicable standards, with all exceedances highlighted. These will include a presentation of past data as part of an evaluation of contaminant concentration trends.

- Results of all analyses, copies of all laboratory data sheets, and the required laboratory data deliverables for all samples collected during the reporting period will be submitted in digital format as determined by the NYSDEC. Currently, data is supplied electronically and submitted to the NYSDEC EQuIS™ database in accordance with the requirements found at the following link: http://www.dec.ny.gov/chemical/62440.html.
- A Site evaluation, which includes the following:
- The compliance of the remedy with the requirements of the Site-specific RAWP and DD;
- The operation and the effectiveness of all treatment units, etc., including identification of any needed repairs or modifications;
- Any new conclusions or observations regarding Site contamination based on inspections or data generated by the Monitoring and Sampling Plan for the media being monitored;
- Recommendations regarding any necessary changes to the remedy and/or Monitoring and Sampling Plan;
- Trends in contaminant levels in the affected media will be evaluated to determine if the remedy continues to be effective in achieving remedial goals as specified by the DD; and
- The overall performance and effectiveness of the remedy.
- A performance summary for all treatment systems at the Site during the calendar year, including information such as:
- The number of days the system operated for the reporting period;
- The average, high, and low flows;
- The contaminant mass removed;
- A description of breakdowns and/or repairs along with an explanation for any significant downtime, if any;
- A description of the resolution of performance problems, if any;
- Alarm conditions, if any;
- Trends in equipment failure, if any;
- A summary of the performance, effluent and/or effectiveness monitoring; and
- Comments, conclusions, and recommendations based on data evaluation.

7.2.1 Certification of Institutional and Engineering Controls (ICs and ECs)

Following the last inspection of the reporting period, a Professional Engineer licensed to practice in New York State will prepare, and include in the PRR, the following certification as per the requirements of NYSDEC DER-10:

"*For each IC or EC identified for the Site, I certify that all of the following statements are true:*

- *The inspection of the Site to confirm the effectiveness of the ICs and ECs required by the remedial program was performed under my direction;*
- *The IC and/or EC employed at the Site is unchanged from the date the control was put in place, or last approved by the Department;*
- *Nothing has occurred that would impair the ability of the control to protect the public health and environment;*
- *Nothing has occurred that would constitute a violation or failure to comply with any Site management plan for this control;*
- *Access to the Site will continue to be provided to the Department to evaluate the remedy, including access to evaluate the continued maintenance of this control;*
- *If a financial assurance mechanism is required under the oversight document for the Site, the mechanism remains valid and sufficient for the intended purpose under the document;*
- *Use of the Site is compliant with the environmental easement;*
- *The EC systems are performing as designed and are effective;*
- *To the best of my knowledge and belief, the work and conclusions described in this certification are in accordance with the requirements of the Site remedial program and generally accepted engineering practices; and*
- *The information presented in this report is accurate and complete.*

I certify that all information and statements in this certification form are true. I understand that a false statement made herein is punishable as a Class "A" misdemeanor, pursuant to Section 210.45 of the Penal Law. I, [name], of [business address], am certifying as Owner's/Remedial Party's Designated Site Representative."

The signed certification will be included in the PRR. The PRR will be submitted, in electronic format, to the NYSDEC Central Office, Regional Office in which the Site is located, and the NYSDOH Bureau of Environmental Exposure Investigation. The PRR may need to be submitted in hard-copy format, if requested by the NYSDEC project manager.

7.3 Corrective Measures Work Plan (CMWP)

If any component of the remedy is found to have failed, or if the periodic certification cannot be provided due to the failure of an IC and/or EC, a CMWP will be submitted to the NYSDEC for approval. The CMWP will explain the failure and provide the details and schedule for performing work necessary to correct the failure. Unless an emergency condition exists, no work will be performed pursuant to the CMWP until it has been approved by NYSDEC.

7.4 Remedial Site Optimization (RSO) Report

In the event that an RSO is to be performed (see Section 6.3), upon completion of an RSO, an RSO Report must be submitted to NYSDEC for approval. The RSO Report will document the research/investigation and data gathering that was conducted, evaluate the results and facts obtained, present a revised conceptual Site model, and present recommendations. RSO

recommendations are to be implemented upon approval from NYSDEC. Additional work plans, design documents, HASPs, etc., may still be required to implement the recommendations, based upon the actions that need to be taken. An FER and update to this SMP may also be required.

The RSO Report will be submitted, in electronic format, to the NYSDEC Central Office, Regional Office in which the Site is located, Site Control, and the NYSDOH Bureau of Environmental Exposure Investigation.

8.0 REFERENCES

1. 6NYCRR Part 375, Environmental Remediation Programs. December 14, 2006.
2. NYSDEC DER-10 – "Technical Guidance for Site Investigation and Remediation".
3. NYSDEC, 1998. Ambient Water Quality Standards and Guidance Values and Groundwater Effluent Limitations Division of Water Technical and Operational Guidance Series (TOGS) 1.1.1. June 1998 (April 2000 addendum).
4. Phase I Environmental Site Assessment (ESA) Report, 470 Manhattan Avenue, Brooklyn, New York, URS Corporation (URS), April 2013.
5. Phase I Environmental Site Assessment (ESA) Report, 119-125 Newton Street, Brooklyn, New York, Hydrotech Environmental, Corp. (Hydrotech), April 2013
6. Environmental Summary Report, 470 Manhattan Avenue, Block 2714, Lots 1, 30, 32, and 33, Brooklyn, New York, AKRF, Inc., September 2015
7. Phase II Work Plan (Short Form), 470 Manhattan Avenue, Block 2714, Lots 1, 30, 32, and 33, Brooklyn, New York, AKRF, Inc., September 2015
8. Remedial Investigation (RI) Report (RIR), 470 Manhattan Avenue, Block 2714, Lots 1, 30, 32, and 33, Brooklyn, New York, AKRF, Inc., October 2015
9. Remedial Action Work Plan (RAWP), 470 Manhattan Avenue, Block 2714, Lots 1, 30, 32, and 33, Brooklyn, New York, AKRF Engineering, P.C., October 2015
10. Delineation Sampling Work Plan, 470 Manhattan Avenue, Block 2714, Lots 1, 30, 32, and 33, Brooklyn, New York, AKRF, Inc., February 2016
11. Supplemental Remedial Investigation (SRI) and Soil Vapor Extraction (SVE) Pilot Test Work Plan, 12 Eckford Street (470 Manhattan Avenue), Brooklyn, New York, AKRF, Inc., May 2016
12. Supplemental Remedial Investigation Report (SRIR), 12 Eckford Street (470 Manhattan Avenue), Brooklyn, New York, AKRF, Inc., July 2016
13. Soil Waste Classification Report, 12 Eckford Street (470 Manhattan Avenue), Brooklyn, New York, AKRF, October 2016
14. Remedial Action Work Plan – New 470 Project, 12 Eckford Street (470 Manhattan Avenue), AKRF, November 2016
15. Decision Document – New 470 Project, 12 Eckford Street (470 Manhattan Avenue), AKRF, November 2016
16. Soil Lead Delineation Report – New 470 Project, 12 Eckford Street (470 Manhattan Avenue), Brooklyn, NY, AKRF, Inc., May 2018
17. Phase I Environmental Site Assessment Report – New 470 Project, 12 Eckford Street (470 Manhattan Avenue), Brooklyn, New York, AKRF, Inc., May 2018
18. Final Engineering Report – New 470 Project, 12 Eckford Street, Brooklyn, New York, AKRF, Inc., September 2019

TABLES

Attached Table 1
New 470 Project
12 Eckford Street
Brooklyn, New York
Tank Endpoint Samples
Volatile Organic Compounds

AKRF Sample ID Sample Elevation Laboratory Sample ID Date Sampled Compound/Unit	NYSDEC UUSCO	NYSDEC RRSCO	UST-1 B 20180628 11.49 460-159423-8 6/28/2018 mg/kg	UST-1 E 20180628 12.48 460-159423-2 6/28/2018 mg/kg	UST-1 N 20180628 12.42 460-159423-1 6/28/2018 mg/kg	UST-1 S 20180628 12.12 460-159423-3 6/28/2018 mg/kg
1,2,4-Trimethylbenzene	**3.6**	**52**	0.0013 U	0.00038 J	0.0013 U	0.0012 U
1,3,5-Trimethylbenzene (Mesitylene)	**8.4**	**52**	0.0013 U	0.00035 J	0.0013 U	0.0012 U
Benzene	**0.06**	**4.8**	0.0013 U	0.0018	0.0013 U	0.0012 U
Cymene	**NS**	**NS**	0.0013 U	0.0015 U	0.0013 U	0.0012 U
Ethylbenzene	**1**	**41**	0.0013 U	0.00094 J	0.0013 U	0.0012 U
Isopropylbenzene (Cumene)	**NS**	**NS**	0.0013 U	0.0015 U	0.0013 U	0.0012 U
N-Butylbenzene	**12**	**100**	0.0013 U	0.0015 U	0.0013 U	0.0012 U
N-Propylbenzene	**3.9**	**100**	0.0013 U	0.0015 U	0.0013 U	0.0012 U
Sec-Butylbenzene	**11**	**100**	0.0013 U	0.0015 U	0.0013 U	0.0012 U
T-Butylbenzene	**5.9**	**100**	0.0013 U	0.0015 U	0.0013 U	0.0012 U
Tert-Butyl Methyl Ether	**0.93**	**100**	0.0013 U	0.0015 U	0.0013 U	0.0012 U
Toluene	**0.7**	**100**	0.0013 U	0.009	0.0013 U	0.0012 U
Xylenes, Total	**0.26**	**100**	0.0025 U	0.012	0.0027 U	0.0025 U

Attached Table 1
New 470 Project
12 Eckford Street
Brooklyn, New York
Tank Endpoint Samples
Volatile Organic Compounds

AKRF Sample ID Sample Elevation Laboratory Sample ID Date Sampled Compound/Unit	NYSDEC UUSCO	NYSDEC RRSCO	UST-1 W 20180628 12.86 460-159423-4 6/28/2018 mg/kg	UST-1 X 20180628 12.86 460-159423-5 6/28/2018 mg/kg	FB20180628 N/A 460-159423-7 6/28/2018 ug/L	TB20180628 N/A 460-159423-6 6/28/2018 ug/L
1,2,4-Trimethylbenzene	**3.6**	**52**	0.0012 UJ	0.0013 UJ	1 U	1 U
1,3,5-Trimethylbenzene (Mesitylene)	**8.4**	**52**	0.0012 UJ	0.0013 UJ	1 U	1 U
Benzene	**0.06**	**4.8**	0.0012 UJ	0.0013 UJ	1 U	1 U
Cymene	**NS**	**NS**	0.0012 UJ	0.0013 UJ	1 U	1 U
Ethylbenzene	**1**	**41**	0.0012 UJ	0.0013 UJ	1 U	1 U
Isopropylbenzene (Cumene)	**NS**	**NS**	0.0012 UJ	0.0013 UJ	1 U	1 U
N-Butylbenzene	**12**	**100**	0.0012 UJ	0.0013 UJ	1 U	1 U
N-Propylbenzene	**3.9**	**100**	0.0012 U	0.0013 U	1 U	1 U
Sec-Butylbenzene	**11**	**100**	0.0012 UJ	0.0013 UJ	1 U	1 U
T-Butylbenzene	**5.9**	**100**	0.0012 UJ	0.0013 UJ	1 U	1 U
Tert-Butyl Methyl Ether	**0.93**	**100**	0.0012 U	0.0013 U	1 U	1 U
Toluene	**0.7**	**100**	0.0012 U	0.0013 U	1 U	1 U
Xylenes, Total	**0.26**	**100**	0.0024 UJ	0.0025 UJ	2 U	2 U

Attached Table 2
New 470 Project
12 Eckford Street
Brooklyn, New York
Tank Endpoint Samples
Semivolatile Organic Compounds

AKRF Sample ID Sample Elevation Laboratory Sample ID Date Sampled Unit Compound/Dilution Rate	NYSDEC UUSCO	NYSDEC RRSCO	UST-1 B 20180628 11.49 460-159423-8 6/28/2018 mg/kg 1	UST-1 E 20180628 12.48 460-159423-2 6/28/2018 mg/kg 1	UST-1 N 20180628 12.42 460-159423-1 6/28/2018 mg/kg 1
Acenaphthene	**20**	**100**	0.14 J	0.18 J	0.11 J
Acenaphthylene	**100**	**100**	0.069 J	0.068 J	0.058 J
Anthracene	**100**	**100**	0.37 J	0.5	0.31 J
Benzo(a)Anthracene	**1**	**1**	**1.2**	**1.3**	1
Benzo(a)Pyrene	**1**	**1**	**1.3**	**1.1**	0.99
Benzo(b)Fluoranthene	**1**	**1**	**1.7**	**1.6**	**1.4**
Benzo(g,h,i)Perylene	**100**	**100**	0.49	0.55	0.46
Benzo(k)Fluoranthene	**0.8**	**3.9**	0.66	0.52	0.44
Chrysene	**1**	**3.9**	**1.3**	**1.2**	**1.1**
Dibenz(a,h)Anthracene	**0.33**	**0.33**	0.16	0.18	0.15
Fluoranthene	**100**	**100**	2.3	2.5	1.8
Fluorene	**30**	**100**	0.16 J	0.22 J	0.14 J
Indeno(1,2,3-c,d)Pyrene	**0.5**	**0.5**	**0.61 J**	**0.64 J**	**0.53 J**
Naphthalene	**12**	**100**	0.2 J	0.22 J	0.2 J
Phenanthrene	**100**	**100**	1.7	2.3	1.4
Pyrene	**100**	**100**	2.6	2.7	2.1

Attached Table 2
New 470 Project
12 Eckford Street
Brooklyn, New York
Tank Endpoint Samples
Semivolatile Organic Compounds

AKRF Sample ID Sample Elevation Laboratory Sample ID Date Sampled Unit Compound/Dilution Rate	NYSDEC UUSCO	NYSDEC RRSCO	UST-1 S 20180628 12.12 460-159423-3 6/28/2018 mg/kg 2	UST-1 W 20180628 12.86 460-159423-4 6/28/2018 mg/kg 1	UST-1 X 20180628 12.86 460-159423-5 6/28/2018 mg/kg 1	FB20180628 N/A 460-159423-7 6/28/2018 ug/L 1
Acenaphthene	**20**	**100**	0.94	0.29 JL	0.17 JL	10 U
Acenaphthylene	**100**	**100**	0.1 J	0.087 J	0.1 J	10 U
Anthracene	**100**	**100**	1.8	0.72	0.59	10 U
Benzo(a)Anthracene	**1**	**1**	**3**	**1.8 JL**	**2.4 JL**	1 U
Benzo(a)Pyrene	**1**	**1**	**2.4**	**1.7**	**2.4**	1 U
Benzo(b)Fluoranthene	**1**	**1**	**3.1**	**2.1**	**3.3**	2 U
Benzo(g,h,i)Perylene	**100**	**100**	1.3	0.88	0.89	10 U
Benzo(k)Fluoranthene	**0.8**	**3.9**	**1.1**	**1**	**1.2**	1 U
Chrysene	**1**	**3.9**	**2.8**	**2 JL**	**2.4 JL**	2 U
Dibenz(a,h)Anthracene	**0.33**	**0.33**	0.32	0.28	0.31	1 U
Fluoranthene	**100**	**100**	7.2	3.1 JL	4.2 JL	10 U
Fluorene	**30**	**100**	0.88	0.35 J	0.23 J	10 U
Indeno(1,2,3-c,d)Pyrene	**0.5**	**0.5**	**1.6**	**1 J**	**1.1 J**	2 U
Naphthalene	**12**	**100**	0.34 J	0.23 JL	0.19 JL	10 U
Phenanthrene	**100**	**100**	7.9	2.8 JL	2.7 JL	10 U
Pyrene	**100**	**100**	6.5	3.9	4.5	10 U

Attached Tables 1 and 2
New 470 Project
12 Eckford Street
Brooklyn, New York
Tank Endpoint Samples
Notes

Qualifier	Description
J - The reported concentration is a value above the method detection limit, but is estimated and may be imprecise.	
L - The reported concentration is a value above the method detection limit, but is reported low.	
K - The reported concentration is proportional to dilution factor and may be exaggerated.	
R - The reported concentration is unusable; the analyte may or may not be present in the sample.	
U - The concentration was not detected above the rmethod detection limit; the compound is not present in the sample.	

Blind Duplicate Sample
UST-1 X 20180628 is a blind duplicate of sample UST-1 W 20180628.

Part 375 Soil Cleanup Objectives (SCOs): SCOs listed in the New York State Department of Environmental

Exceedances of NYSDEC Unrestricted Use Soil Cleanup Objectives (UUSCOs) are presented in bold font.
Exceedances of NYSDEC Restricted Residential Soil Cleanup Objectives (RRSCOs) are presented in gray shading.
Elevations are presented in North American Vertical Datum (NAVD) 88.
mg/kg - milligrams per kilogram = parts per million (ppm)
ug/L - micrograms per Liter = parts per billion (ppb)

Attached Table 3
New 470 Project
12 Eckford Street
Brooklyn, New York
Site-Wide Endpoint Samples
Volatile Organic Compounds

AKRF Sample ID Sample Elevation Laboratory Sample ID Date Sampled Unit	NYSDEC UUSCO	NYSDEC RRSCO	EP-01_20190225 2.72 460-176028-1 2/25/2019 7:50:00 AM mg/kg	EP-02_20190225 2.19 460-176028-2 2/25/2019 8:00:00 AM mg/kg	EP-X01_20190225 2.19 460-176028-8 2/25/2019 9:30:00 AM mg/kg	EP-03_20190225 2.53 460-176028-3 2/25/2019 8:20:00 AM mg/kg
1,1,1-Trichloroethane	0.68	100	0.0011 U	0.0011 U	0.001 U	0.0011 U
1,1,2,2-Tetrachloroethane	NS	NS	0.0011 U	0.0011 U	0.001 U	0.0011 U
1,1,2-Trichloro-1,2,2-Trifluoroethane	NS	NS	0.0011 U	0.0011 U	0.001 U	0.0011 U
1,1,2-Trichloroethane	NS	NS	0.0011 U	0.0011 U	0.001 U	0.0011 U
1,1-Dichloroethane	0.27	26	0.0011 U	0.0011 U	0.001 U	0.0011 U
1,1-Dichloroethene	0.33	100	0.0011 U	0.0011 U	0.001 U	0.0011 U
1,2,3-Trichlorobenzene	NS	NS	0.0011 U	0.0011 UJ	0.001 UJ	0.0011 U
1,2,4-Trichlorobenzene	NS	NS	0.0011 U	0.0011 UJ	0.001 UJ	0.0011 U
1,2-Dibromo-3-Chloropropane	NS	NS	0.0011 U	0.0011 UJ	0.001 UJ	0.0011 U
1,2-Dibromoethane (Ethylene Dibromide)	NS	NS	0.0011 U	0.0011 U	0.001 U	0.0011 U
1,2-Dichlorobenzene	1.1	100	0.0011 U	0.0011 UJ	0.001 UJ	0.0011 U
1,2-Dichloroethane	0.02	3.1	0.0011 U	0.0011 U	0.001 U	0.0011 U
1,2-Dichloropropane	NS	NS	0.0011 U	0.0011 U	0.001 U	0.0011 U
1,3-Dichlorobenzene	2.4	49	0.0011 U	0.0011 UJ	0.001 UJ	0.0011 U
1,4-Dichlorobenzene	1.8	13	0.0011 U	0.0011 UJ	0.001 UJ	0.0011 U
2-Hexanone	NS	NS	0.0054 U	0.0053 U	0.0051 U	0.0054 U
Acetone	0.05	100	0.0054 U	0.0053 U	0.0051 U	0.0054 U
Benzene	0.06	4.8	0.0011 U	0.0011 U	0.001 U	0.0011 U
Bromochloromethane	NS	NS	0.0011 U	0.0011 U	0.001 U	0.0011 U
Bromodichloromethane	NS	NS	0.0011 U	0.0011 U	0.001 U	0.0011 U
Bromoform	NS	NS	0.0011 UJ	0.0011 UJ	0.001 U	0.0011 UJ
Bromomethane	NS	NS	0.0011 U	0.0011 U	0.001 U	0.0011 U
Carbon Disulfide	NS	NS	0.0011 U	0.0011 UJ	0.001 UJ	0.0011 U
Carbon Tetrachloride	0.76	2.4	0.0011 U	0.0011 U	0.001 U	0.0011 U
Chlorobenzene	1.1	100	0.0011 U	0.0011 U	0.001 U	0.0011 U
Chloroethane	NS	NS	0.0011 U	0.0011 U	0.001 U	0.0011 U
Chloroform	0.37	49	0.0011 U	0.0011 U	0.001 U	0.0011 U
Chloromethane	NS	NS	0.0011 U	0.0011 U	0.001 U	0.0011 U
Cis-1,2-Dichloroethylene	0.25	100	0.0011 U	0.0011 U	0.001 U	0.0011 U
Cis-1,3-Dichloropropene	NS	NS	0.0011 U	0.0011 U	0.001 U	0.0011 U
Cyclohexane	NS	NS	0.0011 U	0.0011 U	0.001 U	0.0011 U
Dibromochloromethane	NS	NS	0.0011 U	0.0011 U	0.001 U	0.0011 U
Dichlorodifluoromethane	NS	NS	0.0011 UJ	0.0011 UJ	0.001 UJ	0.0011 UJ
Ethylbenzene	1	41	0.0011 U	0.0011 U	0.001 U	0.0011 U
Isopropylbenzene (Cumene)	NS	NS	0.0011 U	0.0011 U	0.001 U	0.0011 U
M,P-Xylenes	NS	NS	0.0011 U	0.0011 U	0.001 U	0.0011 U
Methyl Acetate	NS	NS	0.0054 U	0.0053 U	0.0051 U	0.0054 U
Methyl Ethyl Ketone (2-Butanone)	0.12	100	0.0054 U	0.0053 U	0.0051 U	0.0054 U
Methyl Isobutyl Ketone (4-Methyl-2-Pentanone)	NS	NS	0.0054 U	0.0053 U	0.0051 U	0.0054 U
Methylcyclohexane	NS	NS	0.0011 U	0.0011 U	0.001 U	0.0011 U
Methylene Chloride	0.05	100	0.0011 U	0.0011 U	0.00054 J	0.00021 J
O-Xylene (1,2-Dimethylbenzene)	NS	NS	0.0011 U	0.0011 U	0.001 U	0.0011 U
Styrene	NS	NS	0.0011 U	0.0011 UJ	0.001 UJ	0.0011 U
Tert-Butyl Methyl Ether	0.93	100	0.0011 U	0.0011 U	0.001 U	0.0011 U
Tetrachloroethylene (PCE)	1.3	19	0.0011 U	0.0011 U	0.001 U	0.0011 U
Toluene	0.7	100	0.0011 U	0.0011 U	0.001 U	0.0011 U
Trans-1,2-Dichloroethene	0.19	100	0.0011 U	0.0011 U	0.001 U	0.0011 U
Trans-1,3-Dichloropropene	NS	NS	0.0011 U	0.0011 U	0.001 U	0.0011 U
Trichloroethylene (TCE)	0.47	21	0.0011 U	0.0011 U	0.001 U	0.0011 U
Trichlorofluoromethane	NS	NS	0.0011 U	0.0011 U	0.001 U	0.0011 U
Vinyl Chloride	0.02	0.9	0.0011 U	0.0011 U	0.001 U	0.0011 U

Attached Table 3
New 470 Project
12 Eckford Street
Brooklyn, New York
Site-Wide Endpoint Samples
Volatile Organic Compounds

AKRF Sample ID Sample Elevation Laboratory Sample ID Date Sampled Unit	NYSDEC UUSCO	NYSDEC RRSCO	EP-04_20190225 2.71 460-176028-4 2/25/2019 8:30:00 AM mg/kg	EP-05_20190225 2.59 460-176028-5 2/25/2019 9:00:00 AM mg/kg	EP-06_20190225 2.66 460-176028-6 2/25/2019 8:45:00 AM mg/kg	EP-07_20190225 2.35 460-176028-7 2/25/2019 9:05:00 AM mg/kg
1,1,1-Trichloroethane	0.68	100	0.0011 U	0.001 U	0.001 U	0.001 U
1,1,2,2-Tetrachloroethane	NS	NS	0.0011 U	0.001 U	0.001 U	0.001 U
1,1,2-Trichloro-1,2,2-Trifluoroethane	NS	NS	0.0011 U	0.001 U	0.001 U	0.001 U
1,1,2-Trichloroethane	NS	NS	0.0011 U	0.001 U	0.001 U	0.001 U
1,1-Dichloroethane	0.27	26	0.0011 U	0.001 U	0.001 U	0.001 U
1,1-Dichloroethene	0.33	100	0.0011 U	0.001 U	0.001 U	0.001 U
1,2,3-Trichlorobenzene	NS	NS	0.0011 U	0.001 U	0.001 U	0.001 U
1,2,4-Trichlorobenzene	NS	NS	0.0011 U	0.001 U	0.001 U	0.001 U
1,2-Dibromo-3-Chloropropane	NS	NS	0.0011 U	0.001 U	0.001 U	0.001 U
1,2-Dibromoethane (Ethylene Dibromide)	NS	NS	0.0011 U	0.001 U	0.001 U	0.001 U
1,2-Dichlorobenzene	1.1	100	0.0011 U	0.001 U	0.001 U	0.001 U
1,2-Dichloroethane	0.02	3.1	0.0011 U	0.001 U	0.001 U	0.001 U
1,2-Dichloropropane	NS	NS	0.0011 U	0.001 U	0.001 U	0.001 U
1,3-Dichlorobenzene	2.4	49	0.0011 U	0.001 U	0.001 U	0.001 U
1,4-Dichlorobenzene	1.8	13	0.0011 U	0.001 U	0.001 U	0.001 U
2-Hexanone	NS	NS	0.0055 U	0.0051 U	0.0052 U	0.0052 U
Acetone	0.05	100	0.0073 U	0.0051 U	0.0052 U	0.0052 U
Benzene	0.06	4.8	0.0011 U	0.001 U	0.001 U	0.001 U
Bromochloromethane	NS	NS	0.0011 U	0.001 U	0.001 U	0.001 U
Bromodichloromethane	NS	NS	0.0011 U	0.001 U	0.001 U	0.001 U
Bromoform	NS	NS	0.0011 UJ	0.001 UJ	0.001 UJ	0.001 U
Bromomethane	NS	NS	0.0011 U	0.001 U	0.001 U	0.001 U
Carbon Disulfide	NS	NS	0.0011 U	0.001 U	0.001 U	0.001 UJ
Carbon Tetrachloride	0.76	2.4	0.0011 U	0.001 U	0.001 U	0.001 U
Chlorobenzene	1.1	100	0.0011 U	0.001 U	0.001 U	0.001 U
Chloroethane	NS	NS	0.0011 U	0.001 U	0.001 U	0.001 U
Chloroform	0.37	49	0.0011 U	0.001 U	0.001 U	0.001 U
Chloromethane	NS	NS	0.0011 U	0.001 U	0.001 U	0.001 U
Cis-1,2-Dichloroethylene	0.25	100	0.0011 U	0.001 U	0.001 U	0.001 U
Cis-1,3-Dichloropropene	NS	NS	0.0011 U	0.001 U	0.001 U	0.001 U
Cyclohexane	NS	NS	0.0011 U	0.001 U	0.001 U	0.001 U
Dibromochloromethane	NS	NS	0.0011 U	0.001 U	0.001 U	0.001 U
Dichlorodifluoromethane	NS	NS	0.0011 UJ	0.001 UJ	0.001 UJ	0.001 UJ
Ethylbenzene	1	41	0.0011 U	0.001 U	0.001 U	0.001 U
Isopropylbenzene (Cumene)	NS	NS	0.0011 U	0.001 U	0.001 U	0.001 U
M,P-Xylenes	NS	NS	0.00039 J	0.001 U	0.001 U	0.001 U
Methyl Acetate	NS	NS	0.0055 U	0.0051 U	0.0052 U	0.0052 U
Methyl Ethyl Ketone (2-Butanone)	0.12	100	0.0023 J	0.0051 U	0.0052 U	0.0052 U
Methyl Isobutyl Ketone (4-Methyl-2-Pentanone)	NS	NS	0.0055 U	0.0051 U	0.0052 U	0.0052 U
Methylcyclohexane	NS	NS	0.0011 U	0.001 U	0.001 U	0.001 U
Methylene Chloride	0.05	100	0.0011 U	0.00031 J	0.00025 J	0.001 U
O-Xylene (1,2-Dimethylbenzene)	NS	NS	0.00019 J	0.001 U	0.001 U	0.001 U
Styrene	NS	NS	0.0011 U	0.001 U	0.001 U	0.001 U
Tert-Butyl Methyl Ether	0.93	100	0.0011 U	0.001 U	0.001 U	0.001 U
Tetrachloroethylene (PCE)	1.3	19	0.0011 U	0.001 U	0.001 U	0.001 U
Toluene	0.7	100	0.0011 U	0.001 U	0.001 U	0.001 U
Trans-1,2-Dichloroethene	0.19	100	0.0011 U	0.001 U	0.001 U	0.001 U
Trans-1,3-Dichloropropene	NS	NS	0.0011 U	0.001 U	0.001 U	0.001 U
Trichloroethylene (TCE)	0.47	21	0.0011 U	0.001 U	0.001 U	0.001 U
Trichlorofluoromethane	NS	NS	0.0011 U	0.001 U	0.001 U	0.001 U
Vinyl Chloride	0.02	0.9	0.0011 U	0.001 U	0.001 U	0.001 U

Attached Table 3
New 470 Project
12 Eckford Street
Brooklyn, New York
Site-Wide Endpoint Samples
Volatile Organic Compounds

AKRF Sample ID Sample Elevation Laboratory Sample ID Date Sampled Unit	NYSDEC UUSCO	NYSDEC RRSCO	EP-08_20190403 12.56 460-178736-4 4/3/2019 8:00:00 AM mg/kg	EP-X02_20190403 12.56 460-178736-1 4/3/2019 11:00:00 AM mg/kg	EP-09_20190403 12.87 460-178736-5 4/3/2019 8:35:00 AM mg/kg	EP-10_20190403 11.91 460-178736-6 4/3/2019 8:45:00 AM mg/kg
1,1,1-Trichloroethane	0.68	100	0.00091 J	0.0011	0.011	0.0013 U
1,1,2,2-Tetrachloroethane	NS	NS	0.0011 UJ	0.0011 UJ	0.0012 U	0.0013 U
1,1,2-Trichloro-1,2,2-Trifluoroethane	NS	NS	0.0011 U	0.0011 U	0.0012 U	0.0013 U
1,1,2-Trichloroethane	NS	NS	0.0011 U	0.0011 U	0.0012 U	0.0013 U
1,1-Dichloroethane	0.27	26	0.001 J	0.0015	0.0044	0.0013 U
1,1-Dichloroethene	0.33	100	0.0011 U	0.0011 U	0.0012 U	0.0013 U
1,2,3-Trichlorobenzene	NS	NS	0.0011 UJ	0.0011 UJ	0.0012 U	0.0013 U
1,2,4-Trichlorobenzene	NS	NS	0.0011 UJ	0.0011 UJ	0.0012 U	0.0013 U
1,2-Dibromo-3-Chloropropane	NS	NS	0.0011 U	0.0011 U	0.0012 U	0.0013 U
1,2-Dibromoethane (Ethylene Dibromide)	NS	NS	0.0011 UJ	0.0011 UJ	0.0012 U	0.0013 U
1,2-Dichlorobenzene	1.1	100	0.0011 UJ	0.0011 UJ	0.0012 U	0.0013 U
1,2-Dichloroethane	0.02	3.1	0.0011 U	0.0011 U	0.0012 U	0.0013 U
1,2-Dichloropropane	NS	NS	0.0011 UJ	0.0011 UJ	0.0012 U	0.0013 U
1,3-Dichlorobenzene	2.4	49	0.0011 UJ	0.0011 UJ	0.0012 U	0.0013 U
1,4-Dichlorobenzene	1.8	13	0.0011 UJ	0.0011 UJ	0.0012 U	0.0013 U
2-Hexanone	NS	NS	0.0057 U	0.0056 U	0.0059 U	0.0066 U
Acetone	0.05	100	0.0048 J	0.0054 J	0.0059 U	0.0066 U
Benzene	0.06	4.8	0.0011 U	0.0011 U	0.0012 U	0.0013 U
Bromochloromethane	NS	NS	0.0011 U	0.0011 U	0.0012 U	0.0013 U
Bromodichloromethane	NS	NS	0.0011 U	0.0011 U	0.0012 U	0.0013 U
Bromoform	NS	NS	0.0011 U	0.0011 U	0.0012 U	0.0013 U
Bromomethane	NS	NS	0.0011 U	0.0011 U	0.0012 U	0.0013 U
Carbon Disulfide	NS	NS	0.0011 UJ	0.0011 UJ	0.0012 U	0.0013 U
Carbon Tetrachloride	0.76	2.4	0.0011 U	0.0011 U	0.0012 U	0.0013 U
Chlorobenzene	1.1	100	0.0011 UJ	0.0011 UJ	0.0012 U	0.0013 U
Chloroethane	NS	NS	0.0011 U	0.0011 U	0.0012 U	0.0013 U
Chloroform	0.37	49	0.0011 U	0.0011 U	0.0012 U	0.0013 U
Chloromethane	NS	NS	0.0011 UJ	0.0011 UJ	0.0012 U	0.0013 U
Cis-1,2-Dichloroethylene	0.25	100	0.00044 J	0.00078 J	0.0023	0.0013 U
Cis-1,3-Dichloropropene	NS	NS	0.0011 UJ	0.0011 UJ	0.0012 U	0.0013 U
Cyclohexane	NS	NS	0.0011 U	0.0011 U	0.0012 U	0.0013 U
Dibromochloromethane	NS	NS	0.0011 U	0.0011 U	0.0012 U	0.0013 U
Dichlorodifluoromethane	NS	NS	0.0011 UJ	0.0011 UJ	0.0012 U	0.0013 U
Ethylbenzene	1	41	0.0011 UJ	0.0011 UJ	0.0012 U	0.0013 U
Isopropylbenzene (Cumene)	NS	NS	0.0011 UJ	0.0011 UJ	0.0012 U	0.0013 U
M,P-Xylenes	NS	NS	0.0011 UJ	0.0011 UJ	0.0012 U	0.0013 U
Methyl Acetate	NS	NS	0.0057 U	0.0056 U	0.0059 U	0.0066 U
Methyl Ethyl Ketone (2-Butanone)	0.12	100	0.0057 U	0.0056 U	0.0059 U	0.0066 U
Methyl Isobutyl Ketone (4-Methyl-2-Pentanone)	NS	NS	0.0057 U	0.0056 U	0.0059 U	0.0066 U
Methylcyclohexane	NS	NS	0.0011 UJ	0.0011 UJ	0.0012 U	0.0013 U
Methylene Chloride	0.05	100	0.0011 U	0.0011 U	0.0012 U	0.0013 U
O-Xylene (1,2-Dimethylbenzene)	NS	NS	0.0011 UJ	0.0011 UJ	0.00017 J	0.0013 U
Styrene	NS	NS	0.0011 UJ	0.0011 UJ	0.0012 U	0.0013 U
Tert-Butyl Methyl Ether	0.93	100	0.0011 U	0.0011 U	0.0012 U	0.0013 U
Tetrachloroethylene (PCE)	1.3	19	0.0049	0.007	0.007	0.0013 U
Toluene	0.7	100	0.0011 UJ	0.0011 UJ	0.0012 U	0.0013 U
Trans-1,2-Dichloroethene	0.19	100	0.0011 U	0.0011 U	0.00031 J	0.0013 U
Trans-1,3-Dichloropropene	NS	NS	0.0011 UJ	0.0011 UJ	0.0012 U	0.0013 U
Trichloroethylene (TCE)	0.47	21	0.0015	0.0023	0.0027	0.0013 U
Trichlorofluoromethane	NS	NS	0.0011 U	0.0011 U	0.0012 U	0.0013 U
Vinyl Chloride	0.02	0.9	0.0011 U	0.0011 U	0.0012 U	0.0013 U

Attached Table 3
New 470 Project
12 Eckford Street
Brooklyn, New York
Site-Wide Endpoint Samples
Volatile Organic Compounds

AKRF Sample ID Sample Elevation Laboratory Sample ID Date Sampled Unit	NYSDEC UUSCO	NYSDEC RRSCO	EP-11_20190403 13.05 460-178736-7 4/3/2019 9:15:00 AM mg/kg	EP-12_20190403 13.37 460-178736-8 4/3/2019 9:45:00 AM mg/kg	EP-13_20190403 12.35 460-178736-9 4/3/2019 10:00:00 AM mg/kg	EP-14_20190403 12.82 460-178736-10 4/3/2019 10:10:00 AM mg/kg
1,1,1-Trichloroethane	**0.68**	**100**	**4.7**	0.00039 J	0.0019 U	0.00072 J
1,1,2,2-Tetrachloroethane	**NS**	**NS**	0.13 U	0.0011 U	0.0019 U	0.0014 U
1,1,2-Trichloro-1,2,2-Trifluoroethane	**NS**	**NS**	0.13 U	0.0011 U	0.0019 U	0.0014 U
1,1,2-Trichloroethane	**NS**	**NS**	0.13 U	0.0011 U	0.0019 U	0.0014 U
1,1-Dichloroethane	**0.27**	**26**	**1.2**	0.0011 U	0.0019 U	0.0014 U
1,1-Dichloroethene	**0.33**	**100**	0.064 J	0.0011 U	0.0019 U	0.0014 U
1,2,3-Trichlorobenzene	**NS**	**NS**	0.13 U	0.0011 U	0.0019 U	0.0014 U
1,2,4-Trichlorobenzene	**NS**	**NS**	0.13 U	0.0011 U	0.0019 U	0.0014 U
1,2-Dibromo-3-Chloropropane	**NS**	**NS**	0.13 U	0.0011 U	0.0019 U	0.0014 U
1,2-Dibromoethane (Ethylene Dibromide)	**NS**	**NS**	0.13 U	0.0011 U	0.0019 U	0.0014 U
1,2-Dichlorobenzene	**1.1**	**100**	0.13 U	0.0011 U	0.0019 U	0.0014 U
1,2-Dichloroethane	**0.02**	**3.1**	0.13 U	0.0011 U	0.0019 U	0.0014 U
1,2-Dichloropropane	**NS**	**NS**	0.13 U	0.0011 U	0.0019 U	0.0014 U
1,3-Dichlorobenzene	**2.4**	**49**	0.13 U	0.0011 U	0.0019 U	0.0014 U
1,4-Dichlorobenzene	**1.8**	**13**	0.13 U	0.0011 U	0.0019 U	0.0014 U
2-Hexanone	**NS**	**NS**	0.63 U	0.0057 U	0.0095 U	0.007 U
Acetone	**0.05**	**100**	0.63 U	0.0057 U	0.0095 U	0.0066 J
Benzene	**0.06**	**4.8**	0.056 J	0.0011 U	0.0019 U	0.0014 U
Bromochloromethane	**NS**	**NS**	0.13 U	0.0011 U	0.0019 U	0.0014 U
Bromodichloromethane	**NS**	**NS**	0.13 U	0.0011 U	0.0019 U	0.0014 U
Bromoform	**NS**	**NS**	0.13 U	0.0011 U	0.0019 U	0.0014 U
Bromomethane	**NS**	**NS**	0.13 U	0.0011 U	0.0019 U	0.0014 U
Carbon Disulfide	**NS**	**NS**	0.13 U	0.0011 U	0.0019 U	0.0014 U
Carbon Tetrachloride	**0.76**	**2.4**	0.13 U	0.0011 U	0.0019 U	0.0014 U
Chlorobenzene	**1.1**	**100**	0.13 U	0.0011 U	0.0019 U	0.0014 U
Chloroethane	**NS**	**NS**	0.07 J	0.0011 U	0.0019 U	0.0014 U
Chloroform	**0.37**	**49**	0.13 U	0.0011 U	0.0019 U	0.0014 U
Chloromethane	**NS**	**NS**	0.13 U	0.0011 U	0.0019 U	0.0014 U
Cis-1,2-Dichloroethylene	**0.25**	**100**	0.12 J	0.0011 U	0.0019 U	0.0014 U
Cis-1,3-Dichloropropene	**NS**	**NS**	0.13 U	0.0011 U	0.0019 U	0.0014 U
Cyclohexane	**NS**	**NS**	0.13 U	0.0011 U	0.0019 U	0.0014 U
Dibromochloromethane	**NS**	**NS**	0.13 U	0.0011 U	0.0019 U	0.0014 U
Dichlorodifluoromethane	**NS**	**NS**	0.13 U	0.0011 U	0.0019 U	0.0014 U
Ethylbenzene	**1**	**41**	0.13 U	0.0011 U	0.0019 U	0.0014 U
Isopropylbenzene (Cumene)	**NS**	**NS**	0.13 U	0.0011 U	0.0019 U	0.0014 U
M,P-Xylenes	**NS**	**NS**	0.04 J	0.0011 U	0.0019 U	0.0014 U
Methyl Acetate	**NS**	**NS**	0.36 J	0.0057 U	0.0095 U	0.007 U
Methyl Ethyl Ketone (2-Butanone)	**0.12**	**100**	0.63 U	0.0057 U	0.0095 U	0.007 U
Methyl Isobutyl Ketone (4-Methyl-2-Pentanone)	**NS**	**NS**	0.63 U	0.0057 U	0.0095 U	0.007 U
Methylcyclohexane	**NS**	**NS**	0.13 U	0.0011 U	0.0019 U	0.0014 U
Methylene Chloride	**0.05**	**100**	0.13 U	0.0011 U	0.0019 U	0.0014 U
O-Xylene (1,2-Dimethylbenzene)	**NS**	**NS**	0.13 U	0.0011 U	0.0019 U	0.0014 U
Styrene	**NS**	**NS**	0.13 U	0.0011 U	0.0019 U	0.0014 U
Tert-Butyl Methyl Ether	**0.93**	**100**	0.13 U	0.0011 U	0.0019 U	0.0014 U
Tetrachloroethylene (PCE)	**1.3**	**19**	1.1	0.00042 J	0.00053 J	0.00049 J
Toluene	**0.7**	**100**	0.054 J	0.0011 U	0.0019 U	0.0014 U
Trans-1,2-Dichloroethene	**0.19**	**100**	0.033 J	0.0011 U	0.0019 U	0.0014 U
Trans-1,3-Dichloropropene	**NS**	**NS**	0.13 U	0.0011 U	0.0019 U	0.0014 U
Trichloroethylene (TCE)	**0.47**	**21**	0.39	0.0011 U	0.0019 U	0.0014 U
Trichlorofluoromethane	**NS**	**NS**	0.13 U	0.0011 U	0.0019 U	0.0014 U
Vinyl Chloride	**0.02**	**0.9**	0.13 U	0.0011 U	0.0019 U	0.0014 U

Attached Table 3
New 470 Project
12 Eckford Street
Brooklyn, New York
Site-Wide Endpoint Samples
Volatile Organic Compounds

AKRF Sample ID Sample Elevation Laboratory Sample ID Date Sampled Unit	NYSDEC UUSCO	NYSDEC RRSCO	EP-15_20190403 13.46 460-178736-11 4/3/2019 10:30:00 AM mg/kg	EP-16_20190403 13.36 460-178736-12 4/3/2019 1:00:00 PM mg/kg	EP-17_20190403 12.37 460-178736-13 4/3/2019 1:15:00 PM mg/kg	EP-18_20190403 14.20 460-178736-14 4/3/2019 1:45:00 PM mg/kg
1,1,1-Trichloroethane	**0.68**	**100**	0.0013 U	0.0011 U	0.0007 J	0.0011 U
1,1,2,2-Tetrachloroethane	**NS**	**NS**	0.0013 U	0.0011 U	0.0012 U	0.0011 U
1,1,2-Trichloro-1,2,2-Trifluoroethane	**NS**	**NS**	0.0013 U	0.0011 U	0.0012 U	0.0011 U
1,1,2-Trichloroethane	**NS**	**NS**	0.0013 U	0.0011 U	0.0012 U	0.0011 U
1,1-Dichloroethane	**0.27**	**26**	0.0013 U	0.0011 U	0.0012 U	0.0011 U
1,1-Dichloroethene	**0.33**	**100**	0.0013 U	0.0011 U	0.0012 U	0.0011 U
1,2,3-Trichlorobenzene	**NS**	**NS**	0.0013 U	0.0011 U	0.0012 U	0.0011 U
1,2,4-Trichlorobenzene	**NS**	**NS**	0.0013 U	0.0011 U	0.0012 U	0.0011 U
1,2-Dibromo-3-Chloropropane	**NS**	**NS**	0.0013 U	0.0011 U	0.0012 U	0.0011 U
1,2-Dibromoethane (Ethylene Dibromide)	**NS**	**NS**	0.0013 U	0.0011 U	0.0012 U	0.0011 U
1,2-Dichlorobenzene	**1.1**	**100**	0.0013 U	0.0011 U	0.0012 U	0.0011 U
1,2-Dichloroethane	**0.02**	**3.1**	0.0013 U	0.0011 U	0.0012 U	0.0011 U
1,2-Dichloropropane	**NS**	**NS**	0.0013 U	0.0011 U	0.0012 U	0.0011 U
1,3-Dichlorobenzene	**2.4**	**49**	0.0013 U	0.0011 U	0.0012 U	0.0011 U
1,4-Dichlorobenzene	**1.8**	**13**	0.0013 U	0.0011 U	0.0012 U	0.0011 U
2-Hexanone	**NS**	**NS**	0.0066 U	0.0056 U	0.0062 U	0.0056 U
Acetone	**0.05**	**100**	0.0066 U	0.0056 U	0.0062 U	0.0056 U
Benzene	**0.06**	**4.8**	0.0013 U	0.0011 U	0.0012 U	0.0011 U
Bromochloromethane	**NS**	**NS**	0.0013 U	0.0011 U	0.0012 U	0.0011 U
Bromodichloromethane	**NS**	**NS**	0.0013 U	0.0011 U	0.0012 U	0.0011 U
Bromoform	**NS**	**NS**	0.0013 U	0.0011 U	0.0012 U	0.0011 U
Bromomethane	**NS**	**NS**	0.0013 U	0.0011 U	0.0012 U	0.0011 U
Carbon Disulfide	**NS**	**NS**	0.0013 U	0.0011 U	0.0012 U	0.0011 U
Carbon Tetrachloride	**0.76**	**2.4**	0.0013 U	0.0011 U	0.0012 U	0.0011 U
Chlorobenzene	**1.1**	**100**	0.0013 U	0.0011 U	0.0012 U	0.0011 U
Chloroethane	**NS**	**NS**	0.0013 U	0.0011 U	0.0012 U	0.0011 U
Chloroform	**0.37**	**49**	0.0013 U	0.0011 U	0.0012 U	0.0011 U
Chloromethane	**NS**	**NS**	0.0013 U	0.0011 U	0.0012 U	0.0011 U
Cis-1,2-Dichloroethylene	**0.25**	**100**	0.0013 U	0.0011 U	0.0012 U	0.0011 U
Cis-1,3-Dichloropropene	**NS**	**NS**	0.0013 U	0.0011 U	0.0012 U	0.0011 U
Cyclohexane	**NS**	**NS**	0.0013 U	0.0011 U	0.0012 U	0.0011 U
Dibromochloromethane	**NS**	**NS**	0.0013 U	0.0011 U	0.0012 U	0.0011 U
Dichlorodifluoromethane	**NS**	**NS**	0.0013 U	0.0011 U	0.0012 U	0.0011 U
Ethylbenzene	**1**	**41**	0.0013 U	0.0011 U	0.0012 U	0.0011 U
Isopropylbenzene (Cumene)	**NS**	**NS**	0.0013 U	0.0011 U	0.0012 U	0.0011 U
M,P-Xylenes	**NS**	**NS**	0.0013 U	0.0011 U	0.0012 U	0.0011 U
Methyl Acetate	**NS**	**NS**	0.0066 U	0.0056 U	0.0062 U	0.0056 U
Methyl Ethyl Ketone (2-Butanone)	**0.12**	**100**	0.0066 U	0.0056 U	0.0062 U	0.0056 U
Methyl Isobutyl Ketone (4-Methyl-2-Pentanone)	**NS**	**NS**	0.0066 U	0.0056 U	0.0062 U	0.0056 U
Methylcyclohexane	**NS**	**NS**	0.0013 U	0.0011 U	0.0012 U	0.0011 U
Methylene Chloride	**0.05**	**100**	0.0013 U	0.0011 U	0.0012 U	0.0011 U
O-Xylene (1,2-Dimethylbenzene)	**NS**	**NS**	0.0013 U	0.0011 U	0.0012 U	0.0011 U
Styrene	**NS**	**NS**	0.0013 U	0.0011 U	0.0012 U	0.0011 U
Tert-Butyl Methyl Ether	**0.93**	**100**	0.0013 U	0.0011 U	0.0012 U	0.0011 U
Tetrachloroethylene (PCE)	**1.3**	**19**	0.0013	0.00021 J	0.0002 J	0.00023 J
Toluene	**0.7**	**100**	0.0013 U	0.0011 U	0.0012 U	0.0011 U
Trans-1,2-Dichloroethene	**0.19**	**100**	0.0013 U	0.0011 U	0.0012 U	0.0011 U
Trans-1,3-Dichloropropene	**NS**	**NS**	0.0013 U	0.0011 U	0.0012 U	0.0011 U
Trichloroethylene (TCE)	**0.47**	**21**	0.0013 U	0.0011 U	0.0012 U	0.0011 U
Trichlorofluoromethane	**NS**	**NS**	0.0013 U	0.0011 U	0.0012 U	0.0011 U
Vinyl Chloride	**0.02**	**0.9**	0.0013 U	0.0011 U	0.0012 U	0.0011 U

Attached Table 3
New 470 Project
12 Eckford Street
Brooklyn, New York
Site-Wide Endpoint Samples
Volatile Organic Compounds

AKRF Sample ID Sample Elevation Laboratory Sample ID Date Sampled Unit	NYSDEC UUSCO	NYSDEC RRSCO	EP-19_20190403 13.94 460-178736-15 4/3/2019 2:00:00 PM mg/kg	EP-20_20190403 13.51 460-178736-16 4/3/2019 2:15:00 PM mg/kg	EP-21_20190429 11.98 460-180693-1 4/29/2019 10:05:00 AM mg/kg	EP-X03_20190429 12.70 460-180693-3 4/29/2019 10:10:00 AM mg/kg
1,1,1-Trichloroethane	0.68	100	0.00052 J	0.00053 J	0.0015 U	0.0015 U
1,1,2,2-Tetrachloroethane	NS	NS	0.0011 U	0.0011 U	0.0015 UJ	0.0015 U
1,1,2-Trichloro-1,2,2-Trifluoroethane	NS	NS	0.0011 U	0.0011 U	0.0015 U	0.0015 U
1,1,2-Trichloroethane	NS	NS	0.0011 U	0.0011 U	0.0015 U	0.0015 U
1,1-Dichloroethane	0.27	26	0.0011 U	0.0011 U	0.0015 U	0.0015 U
1,1-Dichloroethene	0.33	100	0.0011 U	0.0011 U	0.0015 U	0.0015 U
1,2,3-Trichlorobenzene	NS	NS	0.0011 U	0.0011 U	0.0015 UJ	0.0015 U
1,2,4-Trichlorobenzene	NS	NS	0.0011 U	0.0011 U	0.0015 UJ	0.0015 U
1,2-Dibromo-3-Chloropropane	NS	NS	0.0011 U	0.0011 U	0.0015 U	0.0015 U
1,2-Dibromoethane (Ethylene Dibromide)	NS	NS	0.0011 U	0.0011 U	0.0015 UJ	0.0015 U
1,2-Dichlorobenzene	1.1	100	0.0011 U	0.0011 U	0.0015 UJ	0.0015 U
1,2-Dichloroethane	0.02	3.1	0.0011 U	0.0011 U	0.0015 U	0.0015 U
1,2-Dichloropropane	NS	NS	0.0011 U	0.0011 U	0.0015 U	0.0015 U
1,3-Dichlorobenzene	2.4	49	0.0011 U	0.0011 U	0.0015 UJ	0.0015 U
1,4-Dichlorobenzene	1.8	13	0.0011 U	0.0011 U	0.0015 UJ	0.0015 U
2-Hexanone	NS	NS	0.0057 U	0.0056 U	0.0075 UJ	0.0075 U
Acetone	0.05	100	0.0057 U	0.0056 U	0.0075 U	0.0075 U
Benzene	0.06	4.8	0.0011 U	0.0011 U	0.00058 J	0.0015 U
Bromochloromethane	NS	NS	0.0011 U	0.0011 U	0.0015 UJ	0.0015 U
Bromodichloromethane	NS	NS	0.0011 U	0.0011 U	0.0015 U	0.0015 U
Bromoform	NS	NS	0.0011 U	0.0011 U	0.0015 U	0.0015 U
Bromomethane	NS	NS	0.0011 U	0.0011 U	0.0015 U	0.0015 U
Carbon Disulfide	NS	NS	0.0011 U	0.0011 U	0.0015 UJ	0.0015 U
Carbon Tetrachloride	0.76	2.4	0.0011 U	0.0011 U	0.0015 U	0.0015 U
Chlorobenzene	1.1	100	0.0011 U	0.0011 U	0.0015 UJ	0.0015 U
Chloroethane	NS	NS	0.0011 U	0.0011 U	0.0015 U	0.0015 U
Chloroform	0.37	49	0.0011 U	0.00063 J	0.0015 U	0.0015 U
Chloromethane	NS	NS	0.0011 U	0.0011 U	0.0015 U	0.0015 U
Cis-1,2-Dichloroethylene	0.25	100	0.0011 U	0.0011 U	0.0015 U	0.0015 U
Cis-1,3-Dichloropropene	NS	NS	0.0011 U	0.0011 U	0.0015 UJ	0.0015 U
Cyclohexane	NS	NS	0.0011 U	0.0011 U	0.0015 U	0.0015 U
Dibromochloromethane	NS	NS	0.0011 U	0.0011 U	0.0015 U	0.0015 U
Dichlorodifluoromethane	NS	NS	0.0011 U	0.0011 U	0.0015 UJ	0.0015 U
Ethylbenzene	1	41	0.0011 U	0.0011 U	0.0015 UJ	0.0015 U
Isopropylbenzene (Cumene)	NS	NS	0.0011 U	0.0011 U	0.0015 UJ	0.0015 U
M,P-Xylenes	NS	NS	0.0011 U	0.0011 U	0.0015 UJ	0.0015 U
Methyl Acetate	NS	NS	0.0057 U	0.0056 U	0.0075 U	0.0075 U
Methyl Ethyl Ketone (2-Butanone)	0.12	100	0.0057 U	0.0056 U	0.0075 U	0.0075 U
Methyl Isobutyl Ketone (4-Methyl-2-Pentanone)	NS	NS	0.0057 U	0.0056 U	0.0075 U	0.0075 U
Methylcyclohexane	NS	NS	0.0011 U	0.0011 U	0.0015 U	0.0015 U
Methylene Chloride	0.05	100	0.0012 U	0.0011 U	0.00042 J	0.00047 J
O-Xylene (1,2-Dimethylbenzene)	NS	NS	0.0011 U	0.0011 U	0.0015 UJ	0.0015 U
Styrene	NS	NS	0.0011 U	0.0011 U	0.0015 UJ	0.0015 U
Tert-Butyl Methyl Ether	0.93	100	0.0011 U	0.0011 U	0.0015 U	0.0015 U
Tetrachloroethylene (PCE)	1.3	19	0.0011 U	0.0035	0.00049 JL	0.00056 J
Toluene	0.7	100	0.0011 U	0.0011 U	0.0015 U	0.0015 U
Trans-1,2-Dichloroethene	0.19	100	0.0011 U	0.0011 U	0.0015 UJ	0.0015 U
Trans-1,3-Dichloropropene	NS	NS	0.0011 U	0.0011 U	0.0015 UJ	0.0015 U
Trichloroethylene (TCE)	0.47	21	0.0011 U	0.0002 J	0.0015 U	0.0015 U
Trichlorofluoromethane	NS	NS	0.0011 U	0.0011 U	0.0015 U	0.0015 U
Vinyl Chloride	0.02	0.9	0.0011 U	0.0011 U	0.0015 U	0.0015 U

Attached Table 3
New 470 Project
12 Eckford Street
Brooklyn, New York
Site-Wide Endpoint Samples
Volatile Organic Compounds

AKRF Sample ID Sample Elevation Laboratory Sample ID Date Sampled Unit	NYSDEC UUSCO	NYSDEC RRSCO	EP-22_20190429 12.70 460-180693-2 4/29/2019 10:15:00 AM mg/kg	EP-23_20190701 16.45 460-185721-1 7/1/2019 12:35:00 PM mg/kg	EP-24_20190701 15.93 460-185721-2 7/1/2019 12:45:00 PM mg/kg	EP-X04_20190701 15.93 460-185721-3 7/1/2019 12:55:00 PM mg/kg
1,1,1-Trichloroethane	0.68	100	0.0014 U	0.0015 U	0.0016 UJ	0.0016 UJ
1,1,2,2-Tetrachloroethane	NS	NS	0.0014 U	0.0015 U	0.0016 R	0.0016 R
1,1,2-Trichloro-1,2,2-Trifluoroethane	NS	NS	0.0014 U	0.0015 U	0.0016 UJ	0.0016 UJ
1,1,2-Trichloroethane	NS	NS	0.0014 U	0.0015 U	0.0016 U	0.0016 U
1,1-Dichloroethane	0.27	26	0.0014 U	0.0015 U	0.0016 U	0.0016 U
1,1-Dichloroethene	0.33	100	0.0014 U	0.0015 UJ	0.0016 UJ	0.0016 UJ
1,2,3-Trichlorobenzene	NS	NS	0.0014 U	0.0015 U	0.0016 UJ	0.0016 UJ
1,2,4-Trichlorobenzene	NS	NS	0.0014 U	0.0015 U	0.0016 UJ	0.0016 UJ
1,2-Dibromo-3-Chloropropane	NS	NS	0.0014 U	0.0015 U	0.0016 UJ	0.0016 UJ
1,2-Dibromoethane (Ethylene Dibromide)	NS	NS	0.0014 U	0.0015 U	0.0016 UJ	0.0016 UJ
1,2-Dichlorobenzene	1.1	100	0.0014 U	0.0015 U	0.0016 UJ	0.0016 U
1,2-Dichloroethane	0.02	3.1	0.0014 U	0.0015 U	0.0016 U	0.0016 U
1,2-Dichloropropane	NS	NS	0.0014 U	0.0015 U	0.0016 U	0.0016 U
1,3-Dichlorobenzene	2.4	49	0.0014 U	0.0015 U	0.0016 UJ	0.0016 UJ
1,4-Dichlorobenzene	1.8	13	0.0014 U	0.0015 U	0.0016 UJ	0.0016 UJ
2-Hexanone	NS	NS	0.007 U	0.0074 U	0.0078 U	0.0079 U
Acetone	0.05	100	0.007 U	0.027 JK	0.0094 U	0.01 U
Benzene	0.06	4.8	0.0014 U	0.0015 U	0.0016 UJ	0.0016 UJ
Bromochloromethane	NS	NS	0.0014 U	0.0015 U	0.0016 UJ	0.0016 UJ
Bromodichloromethane	NS	NS	0.0014 U	0.0015 U	0.0016 U	0.0016 U
Bromoform	NS	NS	0.0014 U	0.0015 U	0.0016 U	0.0016 U
Bromomethane	NS	NS	0.0014 U	0.0015 U	0.0016 U	0.0016 U
Carbon Disulfide	NS	NS	0.0014 U	0.0015 UJ	0.0016 UJ	0.0016 UJ
Carbon Tetrachloride	0.76	2.4	0.0014 U	0.0015 U	0.0016 UJ	0.0016 UJ
Chlorobenzene	1.1	100	0.0014 U	0.0015 U	0.0016 UJ	0.0016 UJ
Chloroethane	NS	NS	0.0014 U	0.0015 U	0.0016 U	0.0016 U
Chloroform	0.37	49	0.0014 U	0.0015 U	0.0016 UJ	0.0016 UJ
Chloromethane	NS	NS	0.0014 U	0.0015 U	0.0016 U	0.0016 U
Cis-1,2-Dichloroethylene	0.25	100	0.0014 U	0.0015 U	0.0016 UJ	0.0016 UJ
Cis-1,3-Dichloropropene	NS	NS	0.0014 U	0.0015 U	0.0016 U	0.0016 U
Cyclohexane	NS	NS	0.0014 U	0.0015 U	0.0016 UJ	0.0016 UJ
Dibromochloromethane	NS	NS	0.0014 U	0.0015 U	0.0016 U	0.0016 U
Dichlorodifluoromethane	NS	NS	0.0014 U	0.0015 UJ	0.0016 UJ	0.0016 UJ
Ethylbenzene	1	41	0.0014 U	0.0015 U	0.0016 UJ	0.0016 UJ
Isopropylbenzene (Cumene)	NS	NS	0.0014 U	0.0015 U	0.0016 UJ	0.0016 UJ
M,P-Xylenes	NS	NS	0.0014 U	0.0015 U	0.0016 UJ	0.0016 UJ
Methyl Acetate	NS	NS	0.007 U	0.0074 U	0.0078 UJ	0.0079 UJ
Methyl Ethyl Ketone (2-Butanone)	0.12	100	0.007 U	0.0074 U	0.0078 U	0.0079 U
Methyl Isobutyl Ketone (4-Methyl-2-Pentanone)	NS	NS	0.007 U	0.0074 U	0.0078 U	0.0079 U
Methylcyclohexane	NS	NS	0.0014 U	0.0015 U	0.0016 UJ	0.0016 UJ
Methylene Chloride	0.05	100	0.00051 J	0.0015 U	0.0016 UJ	0.0016 UJ
O-Xylene (1,2-Dimethylbenzene)	NS	NS	0.0014 U	0.0015 U	0.0016 UJ	0.00036 JL
Styrene	NS	NS	0.0014 U	0.0015 U	0.0016 UJ	0.0016 UJ
Tert-Butyl Methyl Ether	0.93	100	0.0014 U	0.0015 U	0.0016 UJ	0.0016 UJ
Tetrachloroethylene (PCE)	1.3	19	0.0014 U	0.0015 U	0.0016 UJ	0.0016 UJ
Toluene	0.7	100	0.0014 U	0.0015 U	0.0016 UJ	0.0016 UJ
Trans-1,2-Dichloroethene	0.19	100	0.0014 U	0.0015 U	0.0016 UJ	0.0016 UJ
Trans-1,3-Dichloropropene	NS	NS	0.0014 U	0.0015 U	0.0016 UJ	0.0016 UJ
Trichloroethylene (TCE)	0.47	21	0.0014 U	0.0015 U	0.0016 UJ	0.0016 U
Trichlorofluoromethane	NS	NS	0.0014 U	0.0015 U	0.0016 UJ	0.0016 UJ
Vinyl Chloride	0.02	0.9	0.0014 U	0.0015 U	0.0016 U	0.0016 U

Attached Table 3
New 470 Project
12 Eckford Street
Brooklyn, New York
Site-Wide Endpoint Samples
Volatile Organic Compounds

AKRF Sample ID Sample Elevation Laboratory Sample ID Date Sampled Unit	NYSDEC UUSCO	NYSDEC RRSCO	EP-FB-01_20190225 N/A 460-176028-9 2/25/2019 9:50:00 AM ug/L	EP-FB-02_20190403 N/A 460-178736-2 4/3/2019 12:00:00 PM ug/L	EP-FB-03_20190429 N/A 460-180693-4 4/29/2019 11:40:00 AM ug/L	EP-FB-04_20190701 N/A 460-185721-4 7/1/2019 1:05:00 PM ug/L
1,1,1-Trichloroethane	0.68	100	1 U	1 U	1 U	1 U
1,1,2,2-Tetrachloroethane	NS	NS	1 U	1 U	1 U	1 U
1,1,2-Trichloro-1,2,2-Trifluoroethane	NS	NS	1 U	1 U	1 U	1 U
1,1,2-Trichloroethane	NS	NS	1 U	1 U	1 U	1 U
1,1-Dichloroethane	0.27	26	1 U	1 U	1 U	1 U
1,1-Dichloroethene	0.33	100	1 U	1 U	1 U	1 U
1,2,3-Trichlorobenzene	NS	NS	1 U	1 U	1 U	1 UJ
1,2,4-Trichlorobenzene	NS	NS	1 U	1 U	1 U	1 U
1,2-Dibromo-3-Chloropropane	NS	NS	1 U	1 U	1 U	1 U
1,2-Dibromoethane (Ethylene Dibromide)	NS	NS	1 U	1 U	1 U	1 U
1,2-Dichlorobenzene	1.1	100	1 U	1 U	1 U	1 U
1,2-Dichloroethane	0.02	3.1	1 U	1 U	1 U	1 U
1,2-Dichloropropane	NS	NS	1 U	1 U	1 U	1 U
1,3-Dichlorobenzene	2.4	49	1 U	1 U	1 U	1 U
1,4-Dichlorobenzene	1.8	13	1 U	1 U	1 U	1 U
2-Hexanone	NS	NS	5 U	5 U	5 U	5 U
Acetone	0.05	100	5 U	5 U	5 U	**7.8**
Benzene	0.06	4.8	1 U	1 U	1 U	1 U
Bromochloromethane	NS	NS	1 U	1 U	1 U	1 U
Bromodichloromethane	NS	NS	1 U	1 U	1 U	1 U
Bromoform	NS	NS	1 U	1 U	1 UJ	1 U
Bromomethane	NS	NS	1 U	1 UJ	1 U	1 U
Carbon Disulfide	NS	NS	1 U	1 U	1 U	1 U
Carbon Tetrachloride	0.76	2.4	1 UJ	1 U	1 U	1 U
Chlorobenzene	1.1	100	1 U	1 U	1 U	1 U
Chloroethane	NS	NS	1 U	1 U	1 U	1 U
Chloroform	0.37	49	1 U	1 U	1 U	1 U
Chloromethane	NS	NS	1 U	1 U	1 U	1 U
Cis-1,2-Dichloroethylene	0.25	100	1 U	1 U	1 U	1 U
Cis-1,3-Dichloropropene	NS	NS	1 U	1 U	1 U	1 U
Cyclohexane	NS	NS	1 U	1 U	1 U	1 U
Dibromochloromethane	NS	NS	1 UJ	1 U	1 U	1 U
Dichlorodifluoromethane	NS	NS	1 U	1 U	1 U	1 U
Ethylbenzene	1	41	1 U	1 U	1 U	1 U
Isopropylbenzene (Cumene)	NS	NS	1 U	1 U	1 U	1 U
M,P-Xylenes	NS	NS	1 U	1 U	1 U	0.61 J
Methyl Acetate	NS	NS	5 U	5 U	5 U	5 U
Methyl Ethyl Ketone (2-Butanone)	0.12	100	5 U	5 U	5 U	5 U
Methyl Isobutyl Ketone (4-Methyl-2-Pentanone)	NS	NS	5 U	5 U	5 U	5 U
Methylcyclohexane	NS	NS	1 U	1 U	1 U	1 U
Methylene Chloride	0.05	100	1 U	1 U	1 U	1 U
O-Xylene (1,2-Dimethylbenzene)	NS	NS	1 U	1 U	1 U	1 U
Styrene	NS	NS	1 U	1 U	1 U	1 U
Tert-Butyl Methyl Ether	0.93	100	1 U	1 U	1 U	1 U
Tetrachloroethylene (PCE)	1.3	19	1 U	1 U	1 U	1 U
Toluene	0.7	100	1 U	1 U	1 U	1 U
Trans-1,2-Dichloroethene	0.19	100	1 U	1 U	1 U	1 U
Trans-1,3-Dichloropropene	NS	NS	1 U	1 U	1 U	1 U
Trichloroethylene (TCE)	0.47	21	1 U	1 U	1 U	1 U
Trichlorofluoromethane	NS	NS	1 U	1 U	1 U	1 U
Vinyl Chloride	0.02	0.9	1 U	1 U	1 U	1 U

Attached Table 3
New 470 Project
12 Eckford Street
Brooklyn, New York
Site-Wide Endpoint Samples
Volatile Organic Compounds

AKRF Sample ID Sample Elevation Laboratory Sample ID Date Sampled Unit	NYSDEC UUSCO	NYSDEC RRSCO	EP-TB-01_20190225 N/A 460-176028-10 2/25/2019 ug/L	EP-TB-02_20190403 N/A 460-178736-3 4/3/2019 ug/L	EP-TB-03_20190429 N/A 460-180693-5 4/29/2019 ug/L	EP-TB-04_20190701 N/A 460-185721-5 7/1/2019 1:15:00 PM ug/L
1,1,1-Trichloroethane	0.68	100	1 U	1 U	1 U	1 U
1,1,2,2-Tetrachloroethane	NS	NS	1 U	1 U	1 U	1 U
1,1,2-Trichloro-1,2,2-Trifluoroethane	NS	NS	1 U	1 U	1 U	1 U
1,1,2-Trichloroethane	NS	NS	1 U	1 U	1 U	1 U
1,1-Dichloroethane	0.27	26	1 U	1 U	1 U	1 U
1,1-Dichloroethene	0.33	100	1 U	1 U	1 U	1 U
1,2,3-Trichlorobenzene	NS	NS	1 U	1 U	1 U	1 UJ
1,2,4-Trichlorobenzene	NS	NS	1 U	1 U	1 U	1 U
1,2-Dibromo-3-Chloropropane	NS	NS	1 U	1 U	1 U	1 U
1,2-Dibromoethane (Ethylene Dibromide)	NS	NS	1 U	1 U	1 U	1 U
1,2-Dichlorobenzene	1.1	100	1 U	1 U	1 U	1 U
1,2-Dichloroethane	0.02	3.1	1 U	1 U	1 U	1 U
1,2-Dichloropropane	NS	NS	1 U	1 U	1 U	1 U
1,3-Dichlorobenzene	2.4	49	1 U	1 U	1 U	1 U
1,4-Dichlorobenzene	1.8	13	1 U	1 U	1 U	1 U
2-Hexanone	NS	NS	5 U	5 U	5 U	5 U
Acetone	0.05	100	28	5 U	5 U	5 U
Benzene	0.06	4.8	1 U	1 U	1 U	1 U
Bromochloromethane	NS	NS	1 U	1 U	1 U	1 U
Bromodichloromethane	NS	NS	1 U	1 U	1 U	1 U
Bromoform	NS	NS	1 U	1 U	1 UJ	1 U
Bromomethane	NS	NS	1 U	1 UJ	1 U	1 U
Carbon Disulfide	NS	NS	1 U	1 U	1 U	1 U
Carbon Tetrachloride	0.76	2.4	1 UJ	1 U	1 U	1 U
Chlorobenzene	1.1	100	1 U	1 U	1 U	1 U
Chloroethane	NS	NS	1 U	1 U	1 U	1 U
Chloroform	0.37	49	1 U	1 U	1 U	1 U
Chloromethane	NS	NS	1 U	1 U	1 U	1 U
Cis-1,2-Dichloroethylene	0.25	100	1 U	1 U	1 U	1 U
Cis-1,3-Dichloropropene	NS	NS	1 U	1 U	1 U	1 U
Cyclohexane	NS	NS	1 U	1 U	1 U	1 U
Dibromochloromethane	NS	NS	1 UJ	1 U	1 U	1 U
Dichlorodifluoromethane	NS	NS	1 U	1 U	1 U	1 U
Ethylbenzene	1	41	1 U	1 U	1 U	1 U
Isopropylbenzene (Cumene)	NS	NS	1 U	1 U	1 U	1 U
M,P-Xylenes	NS	NS	1 U	0.34 J	0.3 J	0.5 J
Methyl Acetate	NS	NS	5 U	5 U	5 U	5 U
Methyl Ethyl Ketone (2-Butanone)	0.12	100	5 U	5 U	5 U	5 U
Methyl Isobutyl Ketone (4-Methyl-2-Pentanone)	NS	NS	5 U	5 U	5 U	5 U
Methylcyclohexane	NS	NS	1 U	1 U	1 U	1 U
Methylene Chloride	0.05	100	1 U	1 U	1 U	1 U
O-Xylene (1,2-Dimethylbenzene)	NS	NS	1 U	1 U	1 U	1 U
Styrene	NS	NS	1 U	1 U	1 U	1 U
Tert-Butyl Methyl Ether	0.93	100	1 U	1 U	1 U	1 U
Tetrachloroethylene (PCE)	1.3	19	1 U	1 U	1 U	1 U
Toluene	0.7	100	1 U	1 U	1 U	1 U
Trans-1,2-Dichloroethene	0.19	100	1 U	1 U	1 U	1 U
Trans-1,3-Dichloropropene	NS	NS	1 U	1 U	1 U	1 U
Trichloroethylene (TCE)	0.47	21	1 U	1 U	1 U	1 U
Trichlorofluoromethane	NS	NS	1 U	1 U	1 U	1 U
Vinyl Chloride	0.02	0.9	1 U	1 U	1 U	1 U

Attached Table 4
New 470 Project
12 Eckford Street
Brooklyn, New York
Site-Wide Endpoint Samples
Semivolatile Organic Compounds

AKRF Sample ID Sample Elevation Laboratory Sample ID Date Sampled Unit	NYSDEC UUSCO	NYSDEC RRSCO	EP-01_20190225 2.72 460-176028-1 2/25/2019 7:50:00 AM mg/kg	EP-02_20190225 2.19 460-176028-2 2/25/2019 8:00:00 AM mg/kg	EP-X01_20190225 2.19 460-176028-8 2/25/2019 9:30:00 AM mg/kg	EP-03_20190225 2.53 460-176028-3 2/25/2019 8:20:00 AM mg/kg	EP-04_20190225 2.71 460-176028-4 2/25/2019 8:30:00 AM mg/kg	EP-05_20190225 2.59 460-176028-5 2/25/2019 9:00:00 AM mg/kg	EP-06_20190225 2.66 460-176028-6 2/25/2019 8:45:00 AM mg/kg
1,2,4,5-Tetrachlorobenzene	NS	NS	0.36 U	0.37 U	0.36 U	0.35 U	0.36 U	0.38 U	0.36 U
2,3,4,6-Tetrachlorophenol	NS	NS	0.36 U	0.37 U	0.36 U	0.35 U	0.36 U	0.38 U	0.36 U
2,4,5-Trichlorophenol	NS	NS	0.36 U	0.37 U	0.36 U	0.35 U	0.36 U	0.38 U	0.36 U
2,4,6-Trichlorophenol	NS	NS	0.15 U	0.15 U	0.15 U	0.14 U	0.15 U	0.15 U	0.14 U
2,4-Dichlorophenol	NS	NS	0.15 U	0.15 U	0.15 U	0.14 U	0.15 U	0.15 U	0.14 U
2,4-Dimethylphenol	NS	NS	0.36 U	0.37 U	0.36 U	0.35 U	0.36 U	0.38 U	0.36 U
2,4-Dinitrophenol	NS	NS	0.29 UJ	0.3 R	0.29 R	0.29 UJ	0.29 UJ	0.3 UJ	0.29 UJ
2,4-Dinitrotoluene	NS	NS	0.074 U	0.075 U	0.074 U	0.072 U	0.074 U	0.076 U	0.072 U
2,6-Dinitrotoluene	NS	NS	0.074 U	0.075 U	0.074 U	0.072 U	0.074 U	0.076 U	0.072 U
2-Chloronaphthalene	NS	NS	0.36 U	0.37 U	0.36 U	0.35 U	0.36 U	0.38 U	0.36 U
2-Chlorophenol	NS	NS	0.36 U	0.37 U	0.36 U	0.35 U	0.36 U	0.38 U	0.36 U
2-Methylnaphthalene	NS	NS	0.026 J	0.014 JL	0.023 J	0.024 J	0.036 J	0.061 J	0.039 J
2-Methylphenol (O-Cresol)	0.33	100	0.36 U	0.37 U	0.36 U	0.35 U	0.36 U	0.38 U	0.36 U
2-Nitroaniline	NS	NS	0.36 U	0.37 U	0.36 U	0.35 U	0.36 U	0.38 U	0.36 U
2-Nitrophenol	NS	NS	0.36 U	0.37 U	0.36 U	0.35 U	0.36 U	0.38 U	0.36 U
3,3'-Dichlorobenzidine	NS	NS	0.15 U	0.15 U	0.15 U	0.14 U	0.15 U	0.15 U	0.14 U
3-Nitroaniline	NS	NS	0.36 U	0.37 U	0.36 U	0.35 U	0.36 U	0.38 U	0.36 U
4,6-Dinitro-2-Methylphenol	NS	NS	0.29 U	0.3 U	0.29 U	0.29 U	0.29 U	0.3 U	0.29 U
4-Bromophenyl Phenyl Ether	NS	NS	0.36 U	0.37 U	0.36 U	0.35 U	0.36 U	0.38 U	0.36 U
4-Chloro-3-Methylphenol	NS	NS	0.36 U	0.37 U	0.36 U	0.35 U	0.36 U	0.38 U	0.36 U
4-Chloroaniline	NS	NS	0.36 U	0.37 U	0.36 U	0.35 U	0.36 U	0.38 U	0.36 U
4-Chlorophenyl Phenyl Ether	NS	NS	0.36 U	0.37 U	0.36 U	0.35 U	0.36 U	0.38 U	0.36 U
4-Methylphenol (P-Cresol)	0.33	100	0.026 J	0.021 J	0.033 J	0.013 J	0.02 J	0.029 J	0.012 J
4-Nitroaniline	NS	NS	0.36 U	0.37 U	0.36 U	0.35 U	0.36 U	0.38 U	0.36 U
4-Nitrophenol	NS	NS	0.74 UJ	0.75 U	0.74 UJ	0.72 UJ	0.74 UJ	0.76 UJ	0.72 UJ
Acenaphthene	20	100	0.037 J	0.37 U	0.033 J	0.026 J	0.052 J	0.23 J	0.028 J
Acenaphthylene	100	100	0.36 U	0.37 U	0.0094 J	0.35 U	0.36 U	0.013 J	0.36 U
Acetophenone	NS	NS	0.36 U	0.37 U	0.36 U	0.35 U	0.36 U	0.38 U	0.36 U
Anthracene	100	100	0.051 J	0.37 U	0.066 J	0.048 J	0.097 J	0.42	0.036 J
Atrazine	NS	NS	0.15 UJ	0.15 U	0.15 UJ	0.14 UJ	0.15 UJ	0.15 UJ	0.14 UJ
Benzaldehyde	NS	NS	0.026 J	0.37 U	0.016 J	0.027 J	0.027 J	0.38 U	0.36 U
Benzo(a)Anthracene	1	1	0.12	0.063 JL	0.16	0.11	0.23	0.9	0.089
Benzo(a)Pyrene	1	1	0.093	0.05 JL	0.13	0.1	0.18	0.76	0.072
Benzo(b)Fluoranthene	1	1	0.13	0.063 JL	0.17	0.15	0.24	1	0.1
Benzo(g,h,i)Perylene	100	100	0.065 J	0.028 JL	0.089 J	0.078 J	0.12 J	0.54	0.06 J
Benzo(k)Fluoranthene	0.8	3.9	0.048	0.033 JL	0.079	0.054	0.11	0.38	0.049
Benzyl Butyl Phthalate	NS	NS	0.36 U	0.37 U	0.36 U	0.35 U	0.36 U	0.38 U	0.36 U
Biphenyl (Diphenyl)	NS	NS	0.36 U	0.37 U	0.36 U	0.35 U	0.36 U	0.38 U	0.36 U
Bis(2-Chloroethoxy) Methane	NS	NS	0.36 U	0.37 U	0.36 U	0.35 U	0.36 U	0.38 U	0.36 U
Bis(2-Chloroethyl) Ether (2-Chloroethyl Ether)	NS	NS	0.036 U	0.037 U	0.036 U	0.035 U	0.036 U	0.038 U	0.036 U
Bis(2-Chloroisopropyl) Ether	NS	NS	0.36 U	0.37 U	0.36 U	0.35 U	0.36 U	0.38 U	0.36 U
Bis(2-Ethylhexyl) Phthalate	NS	NS	0.36 U	0.37 U	0.042 J	0.045 J	0.36 U	0.38 U	0.36 U
Caprolactam	NS	NS	0.36 U	0.37 U	0.36 U	0.35 U	0.36 U	0.38 U	0.36 U
Carbazole	NS	NS	0.023 J	0.37 U	0.023 J	0.015 J	0.03 J	0.18 J	0.02 J
Chrysene	1	3.9	0.12 J	0.065 JL	0.17 J	0.13 J	0.23 J	0.82	0.095 J
Dibenz(a,h)Anthracene	0.33	0.33	0.036 U	0.037 U	0.028 J	0.021 J	0.032 J	0.15	0.036 U
Dibenzofuran	7	59	0.031 J	0.016 JL	0.033 J	0.028 J	0.051 J	0.16 J	0.031 J
Diethyl Phthalate	NS	NS	0.36 U	0.37 U	0.36 U	0.35 U	0.36 U	0.38 U	0.36 U
Dimethyl Phthalate	NS	NS	0.36 U	0.37 U	0.36 U	0.35 U	0.36 U	0.38 U	0.36 U
Di-N-Butyl Phthalate	NS	NS	0.36 U	0.37 U	0.36 U	0.35 U	0.36 U	0.38 U	0.36 U
Di-N-Octylphthalate	NS	NS	0.36 U	0.37 U	0.36 U	0.35 U	0.36 U	0.38 U	0.36 U
Fluoranthene	100	100	0.26 J	0.12 JL	0.33 J	0.22 J	0.57	1.9	0.18 J
Fluorene	30	100	0.043 J	0.015 JL	0.046 J	0.029 J	0.063 J	0.22 J	0.026 J
Hexachlorobenzene	0.33	1.2	0.036 U	0.037 U	0.036 U	0.035 U	0.036 U	0.038 U	0.036 U
Hexachlorobutadiene	NS	NS	0.074 U	0.075 U	0.074 U	0.072 U	0.074 U	0.076 U	0.072 U
Hexachlorocyclopentadiene	NS	NS	0.36 U	0.37 U	0.36 U	0.35 U	0.36 U	0.38 U	0.36 U
Hexachloroethane	NS	NS	0.036 U	0.037 U	0.036 U	0.035 U	0.036 U	0.038 U	0.036 U
Indeno(1,2,3-c,d)Pyrene	0.5	0.5	0.072	0.03 JL	0.099	0.078	0.12	0.55	0.059
Isophorone	NS	NS	0.15 U	0.15 U	0.15 U	0.14 U	0.15 U	0.15 U	0.14 U
Naphthalene	12	100	0.057 J	0.038 JL	0.069 J	0.061 J	0.076 J	0.14 J	0.43
Nitrobenzene	NS	NS	0.036 U	0.037 U	0.036 U	0.035 U	0.036 U	0.038 U	0.036 U
N-Nitrosodi-N-Propylamine	NS	NS	0.036 U	0.037 U	0.036 U	0.035 U	0.036 U	0.038 U	0.036 U
N-Nitrosodiphenylamine	NS	NS	0.36 U	0.37 U	0.36 U	0.35 U	0.36 U	0.38 U	0.36 U
Pentachlorophenol	0.8	6.7	0.29 U	0.3 U	0.29 U	0.29 U	0.29 U	0.3 U	0.29 U
Phenanthrene	100	100	0.23 J	0.089 JL	0.27 J	0.19 J	0.41	1.9	0.16 J
Phenol	0.33	100	0.014 J	0.37 U	0.36 U	0.35 U	0.36 U	0.38 U	0.36 U
Pyrene	100	100	0.27 J	0.12 JL	0.35 J	0.24 J	0.59	2	0.18 J

Attached Table 4
New 470 Project
12 Eckford Street
Brooklyn, New York
Site-Wide Endpoint Samples
Semivolatile Organic Compounds

AKRF Sample ID Sample Elevation Laboratory Sample ID Date Sampled Unit	NYSDEC UUSCO	NYSDEC RRSCO	EP-07_20190225 2.35 460-176028-7 2/25/2019 9:05:00 AM mg/kg	EP-08_20190403 12.56 460-178736-4 4/3/2019 8:00:00 AM mg/kg	EP-X02_20190403 12.56 460-178736-1 4/3/2019 11:00:00 AM mg/kg	EP-09_20190403 12.87 460-178736-5 4/3/2019 8:35:00 AM mg/kg	EP-10_20190403 11.91 460-178736-6 4/3/2019 8:45:00 AM mg/kg	EP-11_20190403 13.05 460-178736-7 4/3/2019 9:15:00 AM mg/kg	EP-12_20190403 13.37 460-178736-8 4/3/2019 9:45:00 AM mg/kg
1,2,4,5-Tetrachlorobenzene	NS	NS	0.38 U	0.38 U	1.9 U	0.39 U	0.43 U	0.45 U	0.39 U
2,3,4,6-Tetrachlorophenol	NS	NS	0.38 U	0.38 UJ	1.9 U	0.39 U	0.43 R	0.45 U	0.39 U
2,4,5-Trichlorophenol	NS	NS	0.38 U	0.38 UJ	1.9 U	0.39 U	0.43 R	0.45 U	0.39 U
2,4,6-Trichlorophenol	NS	NS	0.15 U	0.15 UJ	0.77 U	0.16 U	0.17 R	0.18 U	0.16 U
2,4-Dichlorophenol	NS	NS	0.15 U	0.15 UJ	0.77 U	0.16 U	0.17 R	0.18 U	0.16 U
2,4-Dimethylphenol	NS	NS	0.38 U	0.38 UJ	1.9 U	0.39 U	0.43 R	0.45 U	0.39 U
2,4-Dinitrophenol	NS	NS	0.31 UJ	0.31 R	1.5 R	0.32 U	0.35 R	0.36 U	0.32 U
2,4-Dinitrotoluene	NS	NS	0.077 U	0.078 UJ	0.39 U	0.08 U	0.088 U	0.092 U	0.08 U
2,6-Dinitrotoluene	NS	NS	0.077 U	0.078 UJ	0.39 U	0.08 U	0.088 U	0.092 U	0.08 U
2-Chloronaphthalene	NS	NS	0.38 U	0.38 UJ	1.9 U	0.39 U	0.43 U	0.45 U	0.39 U
2-Chlorophenol	NS	NS	0.38 U	0.38 UJ	1.9 U	0.39 U	0.43 R	0.45 U	0.39 U
2-Methylnaphthalene	NS	NS	0.044 J	0.047 JL	0.42 J	0.042 J	0.018 J	0.088 J	0.073 J
2-Methylphenol (O-Cresol)	0.33	100	0.38 U	0.38 UJ	1.9 U	0.39 U	0.43 R	0.45 U	0.39 U
2-Nitroaniline	NS	NS	0.38 U	0.38 UJ	1.9 U	0.39 U	0.43 U	0.45 U	0.39 U
2-Nitrophenol	NS	NS	0.38 U	0.38 UJ	1.9 U	0.39 U	0.43 R	0.45 U	0.39 U
3,3'-Dichlorobenzidine	NS	NS	0.15 U	0.15 U	0.77 U	0.16 U	0.17 U	0.18 U	0.16 U
3-Nitroaniline	NS	NS	0.38 U	0.38 U	1.9 U	0.39 U	0.43 U	0.45 U	0.39 U
4,6-Dinitro-2-Methylphenol	NS	NS	0.31 U	0.31 R	1.5 R	0.32 U	0.35 R	0.36 U	0.32 U
4-Bromophenyl Phenyl Ether	NS	NS	0.38 U	0.38 U	1.9 U	0.39 U	0.43 U	0.45 U	0.39 U
4-Chloro-3-Methylphenol	NS	NS	0.38 U	0.38 UJ	1.9 U	0.39 U	0.43 R	0.45 U	0.39 U
4-Chloroaniline	NS	NS	0.38 U	0.38 U	1.9 U	0.39 U	0.43 U	0.45 U	0.39 U
4-Chlorophenyl Phenyl Ether	NS	NS	0.38 U	0.38 UJ	1.9 U	0.39 U	0.43 U	0.45 U	0.39 U
4-Methylphenol (P-Cresol)	0.33	100	0.046 J	0.1 JL	0.054 J	0.066 J	0.43 R	0.029 J	0.051 J
4-Nitroaniline	NS	NS	0.38 U	0.38 UJ	1.9 U	0.39 U	0.43 U	0.45 U	0.39 U
4-Nitrophenol	NS	NS	0.77 UJ	0.78 UJ	3.9 U	0.8 U	0.88 R	0.92 U	0.8 U
Acenaphthene	20	100	0.055 J	0.059 JL	1.6 J	0.078 J	0.43 U	0.1 J	0.08 J
Acenaphthylene	100	100	0.38 U	0.38 UJ	0.21 J	0.026 J	0.43 U	0.056 J	0.029 J
Acetophenone	NS	NS	0.38 U	0.38 UJ	1.9 U	0.39 U	0.43 U	0.012 J	0.39 U
Anthracene	100	100	0.1 J	0.14 JL	3.1	0.23 J	0.048 J	0.31 J	0.16 J
Atrazine	NS	NS	0.15 UJ	0.15 U	0.77 U	0.16 U	0.17 U	0.18 U	0.16 U
Benzaldehyde	NS	NS	0.023 J	0.024 JL	1.9 U	0.39 U	0.43 U	0.45 U	0.39 U
Benzo(a)Anthracene	1	1	0.23	0.37 JL	10	0.58	0.22	1.1	0.68
Benzo(a)Pyrene	1	1	0.21	0.32 JL	7.1	0.48	0.22	1	1.1
Benzo(b)Fluoranthene	1	1	0.26	0.45 JL	8.7	0.64	0.3	1.4	0.92
Benzo(g,h,i)Perylene	100	100	0.16 J	0.22 JL	2.2	0.28 J	0.15 J	0.65	0.9
Benzo(k)Fluoranthene	0.8	3.9	0.097	0.17 JL	3.1	0.25	0.11	0.43	0.33
Benzyl Butyl Phthalate	NS	NS	0.38 U	0.38 UJ	0.31 J	0.39 U	0.43 U	0.45 U	0.39 U
Biphenyl (Diphenyl)	NS	NS	0.38 U	0.38 UJ	0.11 J	0.39 U	0.43 U	0.45 U	0.026 J
Bis(2-Chloroethoxy) Methane	NS	NS	0.38 U	0.38 UJ	1.9 U	0.39 U	0.43 U	0.45 U	0.39 U
Bis(2-Chloroethyl) Ether (2-Chloroethyl Ether)	NS	NS	0.038 U	0.038 UJ	0.19 U	0.039 U	0.043 U	0.045 U	0.039 U
Bis(2-Chloroisopropyl) Ether	NS	NS	0.38 U	0.38 U	1.9 U	0.39 U	0.43 U	0.45 U	0.39 U
Bis(2-Ethylhexyl) Phthalate	NS	NS	0.38 U	0.085 JL	0.9 J	0.099 J	0.43 U	0.2 J	0.39 U
Caprolactam	NS	NS	0.38 U	0.38 UJ	1.9 U	0.39 U	0.43 U	0.45 U	0.39 U
Carbazole	NS	NS	0.041 J	0.048 JL	0.58 J	0.075 J	0.017 J	0.098 J	0.055 J
Chrysene	1	3.9	0.24 J	0.39 JL	10	0.55	0.23 J	1.2	0.69
Dibenz(a,h)Anthracene	0.33	0.33	0.046	0.058 JL	0.54	0.068	0.04 J	0.17	0.15
Dibenzofuran	7	59	0.061 J	0.068 JL	0.36 J	0.08 J	0.02 J	0.088 J	0.086 J
Diethyl Phthalate	NS	NS	0.38 U	0.38 UJ	1.9 U	0.39 U	0.43 U	0.45 U	0.39 U
Dimethyl Phthalate	NS	NS	0.38 U	0.38 UJ	1.9 U	0.39 U	0.43 U	0.45 U	0.39 U
Di-N-Butyl Phthalate	NS	NS	0.38 U	0.38 UJ	1.9 U	0.39 U	0.43 U	0.45 U	0.39 U
Di-N-Octylphthalate	NS	NS	0.38 U	0.38 U	1.9 U	0.39 U	0.43 U	0.45 U	0.39 U
Fluoranthene	100	100	0.48	0.78 JL	17	1.1	0.39 J	2	1.1
Fluorene	30	100	0.061 J	0.065 JL	1.2 J	0.095 J	0.018 J	0.11 J	0.079 J
Hexachlorobenzene	0.33	1.2	0.038 U	0.038 U	0.19 U	0.039 U	0.043 U	0.045 U	0.039 U
Hexachlorobutadiene	NS	NS	0.077 U	0.078 UJ	0.39 U	0.08 U	0.088 U	0.092 U	0.08 U
Hexachlorocyclopentadiene	NS	NS	0.38 U	0.38 R	1.9 R	0.39 U	0.43 U	0.45 U	0.39 U
Hexachloroethane	NS	NS	0.038 U	0.038 UJ	0.19 U	0.039 U	0.043 U	0.045 U	0.039 U
Indeno(1,2,3-c,d)Pyrene	0.5	0.5	0.15	0.22 JL	3.2	0.31	0.17	0.7	0.66
Isophorone	NS	NS	0.15 U	0.15 UJ	0.77 U	0.16 U	0.17 U	0.18 U	0.16 U
Naphthalene	12	100	0.11 J	0.12 JL	0.35 J	0.1 J	0.06 J	0.13 J	0.22 J
Nitrobenzene	NS	NS	0.038 U	0.038 UJ	0.19 U	0.039 U	0.043 U	0.045 U	0.039 U
N-Nitrosodi-N-Propylamine	NS	NS	0.038 U	0.038 UJ	0.19 U	0.039 U	0.043 U	0.045 U	0.039 U
N-Nitrosodiphenylamine	NS	NS	0.38 U	0.38 UJ	0.3 J	0.39 U	0.43 U	0.45 U	0.39 U
Pentachlorophenol	0.8	6.7	0.31 U	0.31 R	1.5 R	0.32 U	0.35 R	0.36 U	0.32 U
Phenanthrene	100	100	0.43	0.62 JL	16	0.9	0.23 J	1.5	0.82
Phenol	0.33	100	0.38 U	0.014 JL	1.9 U	0.39 U	0.43 R	0.45 U	0.39 U
Pyrene	100	100	0.5	0.76 JL	19	1.1	0.41 J	2.3	1.3

Attached Table 4
New 470 Project
12 Eckford Street
Brooklyn, New York
Site-Wide Endpoint Samples
Semivolatile Organic Compounds

AKRF Sample ID Sample Elevation Laboratory Sample ID Date Sampled Unit	NYSDEC UUSCO	NYSDEC RRSCO	EP-13_20190403 12.35 460-178736-9 4/3/2019 10:00:00 AM mg/kg	EP-14_20190403 12.82 460-178736-10 4/3/2019 10:10:00 AM mg/kg	EP-15_20190403 13.46 460-178736-11 4/3/2019 10:30:00 AM mg/kg	EP-16_20190403 13.36 460-178736-12 4/3/2019 1:00:00 PM mg/kg	EP-17_20190403 12.37 460-178736-13 4/3/2019 1:15:00 PM mg/kg	EP-18_20190403 14.20 460-178736-14 4/3/2019 1:45:00 PM mg/kg	EP-19_20190403 13.94 460-178736-15 4/3/2019 2:00:00 PM mg/kg
1,2,4,5-Tetrachlorobenzene	NS	NS	0.4 U	0.4 U	0.43 U	0.37 U	0.38 U	0.36 U	0.38 U
2,3,4,6-Tetrachlorophenol	NS	NS	0.4 U	0.4 U	0.43 U	0.37 U	0.38 U	0.36 U	0.38 U
2,4,5-Trichlorophenol	NS	NS	0.4 U	0.4 U	0.43 U	0.37 U	0.38 U	0.36 U	0.38 U
2,4,6-Trichlorophenol	NS	NS	0.16 U	0.16 U	0.17 U	0.15 U	0.15 U	0.14 U	0.16 U
2,4-Dichlorophenol	NS	NS	0.16 U	0.16 U	0.17 U	0.15 U	0.15 U	0.14 U	0.16 U
2,4-Dimethylphenol	NS	NS	0.4 U	0.069 JK	0.059 JK	0.37 U	0.043 JK	0.36 U	0.38 U
2,4-Dinitrophenol	NS	NS	0.32 U	0.33 U	0.35 U	0.3 U	0.3 U	0.29 U	0.31 U
2,4-Dinitrotoluene	NS	NS	0.081 U	0.082 U	0.087 U	0.075 U	0.076 U	0.073 U	0.078 U
2,6-Dinitrotoluene	NS	NS	0.081 U	0.082 U	0.087 U	0.075 U	0.076 U	0.073 U	0.078 U
2-Chloronaphthalene	NS	NS	0.4 U	0.03 J	0.43 U	0.37 U	0.026 J	0.36 U	0.053 J
2-Chlorophenol	NS	NS	0.4 U	0.4 U	0.43 U	0.37 U	0.38 U	0.36 U	0.38 U
2-Methylnaphthalene	NS	NS	0.095 J	0.36 J	0.14 J	0.026 J	0.33 J	0.088 J	0.17 J
2-Methylphenol (O-Cresol)	0.33	100	0.4 U	0.036 J	0.43 U	0.37 U	0.032 J	0.36 U	0.38 U
2-Nitroaniline	NS	NS	0.4 U	0.4 U	0.43 U	0.37 U	0.38 U	0.36 U	0.38 U
2-Nitrophenol	NS	NS	0.4 U	0.4 U	0.43 U	0.37 U	0.38 U	0.36 U	0.38 U
3,3'-Dichlorobenzidine	NS	NS	0.16 U	0.16 U	0.17 U	0.15 U	0.15 U	0.14 U	0.16 U
3-Nitroaniline	NS	NS	0.4 U	0.4 U	0.43 U	0.37 U	0.38 U	0.36 U	0.38 U
4,6-Dinitro-2-Methylphenol	NS	NS	0.32 U	0.33 U	0.35 U	0.3 U	0.3 U	0.29 U	0.31 U
4-Bromophenyl Phenyl Ether	NS	NS	0.4 U	0.4 U	0.43 U	0.37 U	0.38 U	0.36 U	0.38 U
4-Chloro-3-Methylphenol	NS	NS	0.4 U	0.4 U	0.43 U	0.37 U	0.38 U	0.36 U	0.38 U
4-Chloroaniline	NS	NS	0.4 U	0.4 U	0.43 U	0.37 U	0.38 U	0.36 U	0.38 U
4-Chlorophenyl Phenyl Ether	NS	NS	0.4 U	0.4 U	0.43 U	0.37 U	0.38 U	0.36 U	0.38 U
4-Methylphenol (P-Cresol)	0.33	100	0.11 J	0.2 J	**0.4 J**	0.027 J	0.12 J	0.041 J	0.072 J
4-Nitroaniline	NS	NS	0.4 U	0.4 U	0.43 U	0.37 U	0.38 U	0.36 U	0.38 U
4-Nitrophenol	NS	NS	0.81 U	0.82 U	0.87 U	0.75 U	0.76 U	0.73 U	0.78 U
Acenaphthene	20	100	0.092 J	0.28 J	0.16 J	0.027 J	0.33 J	0.14 J	0.3 J
Acenaphthylene	100	100	0.049 J	0.17 J	0.071 J	0.0097 J	0.13 J	0.039 J	0.28 J
Acetophenone	NS	NS	0.017 J	0.4 U	0.032 J	0.37 U	0.011 J	0.36 U	0.015 J
Anthracene	100	100	0.17 J	0.65	0.26 J	0.052 J	0.53	0.46	0.6
Atrazine	NS	NS	0.16 U	0.16 U	0.17 U	0.15 U	0.15 U	0.14 U	0.16 U
Benzaldehyde	NS	NS	0.037 J	0.043 J	0.079 J	0.37 U	0.38 U	0.36 U	0.027 J
Benzo(a)Anthracene	1	1	0.41	**1.2**	0.29	0.15	**1.1**	0.99	**1.3**
Benzo(a)Pyrene	1	1	0.35	0.96	0.17	0.14	0.92	0.88	**1.3**
Benzo(b)Fluoranthene	1	1	0.6	**1.4**	0.34	0.18	**1.3**	**1.2**	**1.7**
Benzo(g,h,i)Perylene	100	100	0.29 J	0.55	0.13 J	0.084 J	0.51	0.54	0.81
Benzo(k)Fluoranthene	0.8	3.9	0.22	0.46	0.11	0.068	0.39	0.5	0.59
Benzyl Butyl Phthalate	NS	NS	0.4 U	0.4 U	0.43 U	0.37 U	0.38 U	0.36 U	0.38 U
Biphenyl (Diphenyl)	NS	NS	0.033 J	0.098 J	0.046 J	0.37 U	0.089 J	0.027 J	0.071 J
Bis(2-Chloroethoxy) Methane	NS	NS	0.4 U	0.4 U	0.43 U	0.37 U	0.38 U	0.36 U	0.38 U
Bis(2-Chloroethyl) Ether (2-Chloroethyl Ether)	NS	NS	0.04 U	0.04 U	0.043 U	0.037 U	0.038 U	0.036 U	0.038 U
Bis(2-Chloroisopropyl) Ether	NS	NS	0.4 U	0.4 U	0.43 U	0.37 U	0.38 U	0.36 U	0.38 U
Bis(2-Ethylhexyl) Phthalate	NS	NS	0.4 U	0.4 U	0.43 U	0.37 U	0.075 J	0.36 U	0.091 J
Caprolactam	NS	NS	0.4 U	0.4 U	0.43 U	0.37 U	0.38 U	0.36 U	0.38 U
Carbazole	NS	NS	0.065 J	0.32 J	0.079 J	0.024 J	0.23 J	0.12 J	0.31 J
Chrysene	1	3.9	0.5	**1.2**	0.41 J	0.15 J	**1.1**	0.98	**1.4**
Dibenz(a,h)Anthracene	0.33	0.33	0.073	0.16	0.039 J	0.023 J	0.14	0.12	0.16
Dibenzofuran	7	59	0.12 J	0.42	0.19 J	0.033 J	0.36 J	0.15 J	0.31 J
Diethyl Phthalate	NS	NS	0.4 U	0.4 U	0.43 U	0.37 U	0.38 U	0.36 U	0.38 U
Dimethyl Phthalate	NS	NS	0.4 U	0.4 U	0.43 U	0.37 U	0.38 U	0.36 U	0.38 U
Di-N-Butyl Phthalate	NS	NS	0.4 U	0.4 U	0.43 U	0.37 U	0.38 U	0.36 U	0.38 U
Di-N-Octylphthalate	NS	NS	0.4 U	0.4 U	0.43 U	0.37 U	0.38 U	0.36 U	0.38 U
Fluoranthene	100	100	1	2.9	1.1	0.29 J	2.6	2.3	3.4
Fluorene	30	100	0.095 J	0.47	0.17 J	0.031 J	0.41	0.18 J	0.44
Hexachlorobenzene	0.33	1.2	0.04 U	0.04 U	0.043 U	0.037 U	0.038 U	0.036 U	0.038 U
Hexachlorobutadiene	NS	NS	0.081 U	0.082 U	0.087 U	0.075 U	0.076 U	0.073 U	0.078 U
Hexachlorocyclopentadiene	NS	NS	0.4 U	0.4 U	0.43 U	0.37 U	0.38 U	0.36 U	0.38 U
Hexachloroethane	NS	NS	0.04 U	0.04 U	0.043 U	0.037 U	0.038 U	0.036 U	0.038 U
Indeno(1,2,3-c,d)Pyrene	0.5	0.5	0.27	**0.59**	0.13	0.096	**0.56**	**0.58**	**0.9**
Isophorone	NS	NS	0.16 U	0.16 U	0.17 U	0.15 U	0.15 U	0.14 U	0.16 U
Naphthalene	12	100	0.32 J	2.1	0.53	0.07 J	1.1	0.28 J	0.67
Nitrobenzene	NS	NS	0.04 U	0.04 U	0.043 U	0.037 U	0.038 U	0.036 U	0.038 U
N-Nitrosodi-N-Propylamine	NS	NS	0.04 U	0.04 U	0.043 U	0.037 U	0.038 U	0.036 U	0.038 U
N-Nitrosodiphenylamine	NS	NS	0.4 U	0.4 U	0.43 U	0.37 U	0.38 U	0.36 U	0.38 U
Pentachlorophenol	0.8	6.7	0.32 U	0.33 U	0.35 U	0.3 U	0.3 U	0.29 U	0.31 U
Phenanthrene	100	100	0.87	3.2	1.4	0.24 J	2.8	2.1	3.6
Phenol	0.33	100	0.4 U	0.065 J	0.062 J	0.37 U	0.061 J	0.36 U	0.036 J
Pyrene	100	100	0.98	2.9	0.96	0.29 J	2.5	2.2	3.4

Attached Table 4
New 470 Project
12 Eckford Street
Brooklyn, New York
Site-Wide Endpoint Samples
Semivolatile Organic Compounds

AKRF Sample ID Sample Elevation Laboratory Sample ID Date Sampled Unit	NYSDEC UUSCO	NYSDEC RRSCO	EP-20_20190403 13.51 460-178736-16 4/3/2019 2:15:00 PM mg/kg	EP-21_20190429 11.98 460-180693-1 4/29/2019 10:05:00 AM mg/kg	EP-X03_20190429 12.70 460-180693-3 4/29/2019 10:10:00 AM mg/kg	EP-22_20190429 12.70 460-180693-2 4/29/2019 10:15:00 AM mg/kg	EP-23_20190701 16.45 460-185721-1 7/1/2019 12:35:00 PM mg/kg	EP-24_20190701 15.93 460-185721-2 7/1/2019 12:45:00 PM mg/kg	EP-X04_20190701 15.93 460-185721-3 7/1/2019 12:55:00 PM mg/kg
1,2,4,5-Tetrachlorobenzene	NS	NS	0.38 U	0.39 UJ	0.38 U	0.39 U	0.75 U	0.36 UJ	0.37 UJ
2,3,4,6-Tetrachlorophenol	NS	NS	0.38 U	0.39 UJ	0.38 U	0.39 U	0.75 U	0.36 R	0.37 R
2,4,5-Trichlorophenol	NS	NS	0.38 U	0.39 UJ	0.38 U	0.39 U	0.75 U	0.36 R	0.37 UJ
2,4,6-Trichlorophenol	NS	NS	0.15 U	0.16 UJ	0.15 U	0.16 U	0.3 U	0.15 R	0.15 UJ
2,4-Dichlorophenol	NS	NS	0.15 U	0.16 UJ	0.15 U	0.16 U	0.3 U	0.15 R	0.15 UJ
2,4-Dimethylphenol	NS	NS	0.38 U	0.39 UJ	0.38 U	0.39 U	0.75 U	0.36 R	0.37 UJ
2,4-Dinitrophenol	NS	NS	0.31 U	0.31 R	0.31 U	0.31 U	0.61 U	0.29 R	0.3 R
2,4-Dinitrotoluene	NS	NS	0.078 U	0.079 UJ	0.077 U	0.078 U	0.15 U	0.074 UJ	0.076 UJ
2,6-Dinitrotoluene	NS	NS	0.078 U	0.079 UJ	0.077 U	0.078 U	0.15 U	0.074 UJ	0.076 UJ
2-Chloronaphthalene	NS	NS	0.38 U	0.39 UJ	0.38 U	0.39 U	0.75 U	0.36 UJ	0.37 UJ
2-Chlorophenol	NS	NS	0.38 U	0.39 UJ	0.38 U	0.39 U	0.75 U	0.36 R	0.37 UJ
2-Methylnaphthalene	NS	NS	0.06 J	0.065 JL	0.064 J	0.081 J	0.034 J	0.023 JL	0.022 JL
2-Methylphenol (O-Cresol)	0.33	100	0.38 U	0.39 UJ	0.38 U	0.39 U	0.75 U	0.36 R	0.37 UJ
2-Nitroaniline	NS	NS	0.38 U	0.39 UJ	0.38 U	0.39 U	0.75 U	0.36 UJ	0.37 UJ
2-Nitrophenol	NS	NS	0.38 U	0.39 R	0.38 U	0.39 U	0.75 U	0.36 R	0.37 UJ
3,3'-Dichlorobenzidine	NS	NS	0.15 U	0.16 UJ	0.15 U	0.16 U	0.3 U	0.15 U	0.15 U
3-Nitroaniline	NS	NS	0.38 U	0.39 U	0.38 U	0.39 U	0.75 U	0.36 U	0.37 U
4,6-Dinitro-2-Methylphenol	NS	NS	0.31 U	0.31 R	0.31 U	0.31 U	0.61 U	0.29 R	0.3 R
4-Bromophenyl Phenyl Ether	NS	NS	0.38 U	0.39 UJ	0.38 U	0.39 U	0.75 U	0.36 UJ	0.37 UJ
4-Chloro-3-Methylphenol	NS	NS	0.38 U	0.39 UJ	0.38 U	0.39 U	0.75 U	0.36 R	0.37 UJ
4-Chloroaniline	NS	NS	0.38 U	0.39 U	0.38 U	0.39 U	0.75 U	0.36 U	0.37 U
4-Chlorophenyl Phenyl Ether	NS	NS	0.38 U	0.39 UJ	0.38 U	0.39 U	0.75 U	0.36 UJ	0.37 UJ
4-Methylphenol (P-Cresol)	0.33	100	0.011 J	0.1 JL	0.07 J	0.2 J	0.75 U	0.36 R	0.37 UJ
4-Nitroaniline	NS	NS	0.38 U	0.39 UJ	0.38 U	0.39 U	0.75 U	0.36 UJ	0.37 UJ
4-Nitrophenol	NS	NS	0.78 U	0.79 R	0.77 U	0.78 U	1.5 U	0.74 R	0.76 UJ
Acenaphthene	20	100	0.12 J	0.1 JL	0.062 J	0.057 J	0.11 J	0.059 JL	0.032 JL
Acenaphthylene	100	100	0.088 J	0.022 JL	0.015 J	0.018 J	0.038 J	0.015 JL	0.37 UJ
Acetophenone	NS	NS	0.38 U	0.39 UJ	0.012 J	0.39 U	0.75 U	0.36 UJ	0.37 UJ
Anthracene	100	100	0.41	0.2 JL	0.11 J	0.12 J	0.71 J	0.16 JL	0.095 JL
Atrazine	NS	NS	0.15 U	0.16 UJ	0.15 U	0.16 U	0.3 U	0.15 UJ	0.15 UJ
Benzaldehyde	NS	NS	0.38 U	0.024 JL	0.38 U	0.39 U	0.75 U	0.36 UJ	0.37 UJ
Benzo(a)Anthracene	1	1	**1.7**	0.39 JL	0.25	0.29	**4.9**	0.43 JL	0.28 JL
Benzo(a)Pyrene	1	1	**1.7**	0.3	0.23	0.25	**4**	0.37 JL	0.24 JL
Benzo(b)Fluoranthene	1	1	**2.4**	0.41	0.31	0.35	**6.6**	0.52 JL	0.33 JL
Benzo(g,h,i)Perylene	100	100	1.1	0.17 J	0.13 J	0.15 J	3.1	0.23 JL	0.12 JL
Benzo(k)Fluoranthene	0.8	3.9	**0.84**	0.16 JL	0.11	0.14	**2.5**	0.2 JL	0.13 JL
Benzyl Butyl Phthalate	NS	NS	0.38 U	0.39 U	0.38 U	0.39 U	0.75 U	0.019 JL	0.37 UJ
Biphenyl (Diphenyl)	NS	NS	0.02 J	0.39 UJ	0.38 U	0.39 U	0.75 U	0.36 UJ	0.37 UJ
Bis(2-Chloroethoxy) Methane	NS	NS	0.38 U	0.39 UJ	0.38 U	0.39 U	0.75 U	0.36 UJ	0.37 UJ
Bis(2-Chloroethyl) Ether (2-Chloroethyl Ether)	NS	NS	0.038 U	0.039 UJ	0.038 U	0.039 U	0.075 U	0.036 UJ	0.037 UJ
Bis(2-Chloroisopropyl) Ether	NS	NS	0.38 U	0.39 U	0.38 U	0.39 U	0.75 UJ	0.36 UJ	0.37 UJ
Bis(2-Ethylhexyl) Phthalate	NS	NS	0.38 U	0.39 U	0.044 J	0.037 J	0.13 J	0.36 UJ	0.023 JL
Caprolactam	NS	NS	0.38 U	0.39 R	0.38 U	0.036 J	0.75 U	0.36 UJ	0.37 UJ
Carbazole	NS	NS	0.14 J	0.084 JL	0.038 J	0.048 J	0.59 J	0.076 JL	0.048 JL
Chrysene	1	3.9	**1.8**	0.38 JL	0.25 J	0.29 J	**5.6**	0.42 JL	0.3 JL
Dibenz(a,h)Anthracene	0.33	0.33	0.32	0.049 JL	0.039	0.044	**0.67**	0.063 JL	0.039 JL
Dibenzofuran	7	59	0.11 J	0.1 JL	0.072 J	0.086 J	0.081 J	0.054 JL	0.038 JL
Diethyl Phthalate	NS	NS	0.38 U	0.39 UJ	0.38 U	0.39 U	0.75 U	0.36 UJ	0.37 UJ
Dimethyl Phthalate	NS	NS	0.38 U	0.39 UJ	0.38 U	0.39 U	0.75 U	0.36 UJ	0.37 UJ
Di-N-Butyl Phthalate	NS	NS	0.38 U	0.39 UJ	0.84	0.39 U	0.75 U	0.36 UJ	0.37 UJ
Di-N-Octylphthalate	NS	NS	0.38 U	0.39 U	0.38 UJ	0.39 UJ	0.75 U	0.36 UJ	0.37 UJ
Fluoranthene	100	100	3.1	0.81 JL	0.5	0.58	12	0.8 JL	0.53 JL
Fluorene	30	100	0.15 J	0.13 JL	0.072 J	0.073 J	0.088 J	0.064 JL	0.029 JL
Hexachlorobenzene	0.33	1.2	0.038 U	0.039 U	0.038 U	0.039 U	0.075 U	0.036 UJ	0.037 UJ
Hexachlorobutadiene	NS	NS	0.078 U	0.079 UJ	0.077 U	0.078 U	0.15 U	0.074 UJ	0.076 UJ
Hexachlorocyclopentadiene	NS	NS	0.38 U	0.39 R	0.38 U	0.39 U	0.75 U	0.36 R	0.37 R
Hexachloroethane	NS	NS	0.038 U	0.039 UJ	0.038 U	0.039 U	0.075 U	0.036 UJ	0.037 UJ
Indeno(1,2,3-c,d)Pyrene	0.5	0.5	**1.2**	0.18	0.14 J	0.16 J	**3.6**	0.27 JL	0.15 JL
Isophorone	NS	NS	0.15 U	0.16 UJ	0.15 U	0.16 U	0.3 U	0.15 UJ	0.15 UJ
Naphthalene	12	100	0.14 J	0.23 JL	0.19 J	0.29 J	0.088 J	0.043 JL	0.06 JL
Nitrobenzene	NS	NS	0.038 U	0.039 UJ	0.038 U	0.039 U	0.075 U	0.036 UJ	0.037 UJ
N-Nitrosodi-N-Propylamine	NS	NS	0.038 U	0.039 UJ	0.038 U	0.039 U	0.075 U	0.036 UJ	0.037 UJ
N-Nitrosodiphenylamine	NS	NS	0.38 U	0.39 UJ	0.38 U	0.39 U	0.75 U	0.36 UJ	0.37 UJ
Pentachlorophenol	0.8	6.7	0.31 U	0.31 UJ	0.31 U	0.31 U	0.61 U	0.29 R	0.3 R
Phenanthrene	100	100	1.9	0.88 JL	0.47	0.53	3.4	0.59 JL	0.31 JL
Phenol	0.33	100	0.38 U	0.39 UJ	0.38 U	0.39 U	0.75 U	0.36 R	0.37 UJ
Pyrene	100	100	3.2	0.91	0.58	0.67	11	0.71 JL	0.5 JL

Attached Table 4
New 470 Project
12 Eckford Street
Brooklyn, New York
Site-Wide Endpoint Samples
Semivolatile Organic Compounds

AKRF Sample ID Sample Elevation Laboratory Sample ID Date Sampled Unit	NYSDEC UUSCO	NYSDEC RRSCO	EP-FB-01_20190225 N/A 460-176028-9 2/25/2019 9:50:00 AM ug/L	EP-FB-02_20190403 N/A 460-178736-2 4/3/2019 12:00:00 PM ug/L	EP-FB-03_20190429 N/A 460-180693-4 4/29/2019 11:40:00 AM ug/L	EP-FB-04_20190701 N/A 460-185721-4 7/1/2019 1:05:00 PM ug/L
1,2,4,5-Tetrachlorobenzene	NS	NS	10 U	10 U	10 U	10 U
2,3,4,6-Tetrachlorophenol	NS	NS	10 UJ	10 U	10 UJ	10 U
2,4,5-Trichlorophenol	NS	NS	10 U	10 U	10 U	10 U
2,4,6-Trichlorophenol	NS	NS	10 U	10 U	10 U	10 U
2,4-Dichlorophenol	NS	NS	10 U	10 U	10 U	10 U
2,4-Dimethylphenol	NS	NS	10 U	10 U	10 U	10 U
2,4-Dinitrophenol	NS	NS	20 UJ	20 U	20 U	20 U
2,4-Dinitrotoluene	NS	NS	2 U	2 U	2 U	2 U
2,6-Dinitrotoluene	NS	NS	2 U	2 U	2 U	2 U
2-Chloronaphthalene	NS	NS	10 U	10 U	10 U	10 U
2-Chlorophenol	NS	NS	10 U	10 U	10 U	10 U
2-Methylnaphthalene	NS	NS	10 U	10 U	10 U	10 U
2-Methylphenol (O-Cresol)	0.33	100	10 U	10 U	10 U	10 U
2-Nitroaniline	NS	NS	10 U	10 U	10 U	10 U
2-Nitrophenol	NS	NS	10 U	10 U	10 U	10 U
3,3'-Dichlorobenzidine	NS	NS	10 U	10 U	10 U	10 U
3-Nitroaniline	NS	NS	10 U	10 U	10 U	10 U
4,6-Dinitro-2-Methylphenol	NS	NS	20 UJ	20 U	20 U	20 U
4-Bromophenyl Phenyl Ether	NS	NS	10 U	10 U	10 U	10 U
4-Chloro-3-Methylphenol	NS	NS	10 U	10 U	10 U	10 U
4-Chloroaniline	NS	NS	10 U	10 U	10 U	10 U
4-Chlorophenyl Phenyl Ether	NS	NS	10 U	10 U	10 U	10 U
4-Methylphenol (P-Cresol)	0.33	100	10 U	10 UJ	10 U	10 U
4-Nitroaniline	NS	NS	10 U	10 U	10 U	10 U
4-Nitrophenol	NS	NS	20 U	20 U	20 UJ	20 U
Acenaphthene	20	100	10 U	10 U	10 U	10 U
Acenaphthylene	100	100	10 U	10 U	10 U	10 U
Acetophenone	NS	NS	10 U	10 U	10 U	10 U
Anthracene	100	100	10 U	10 U	10 U	10 U
Atrazine	NS	NS	2 U	2 U	2 U	2 U
Benzaldehyde	NS	NS	10 U	10 U	10 U	10 U
Benzo(a)Anthracene	1	1	1 U	1 U	1 U	1 U
Benzo(a)Pyrene	1	1	1 U	1 U	1 U	1 U
Benzo(b)Fluoranthene	1	1	2 U	2 U	2 U	2 U
Benzo(g,h,i)Perylene	100	100	10 UJ	10 U	10 U	10 UJ
Benzo(k)Fluoranthene	0.8	3.9	1 U	1 U	1 U	1 U
Benzyl Butyl Phthalate	NS	NS	10 U	10 U	10 UJ	10 U
Biphenyl (Diphenyl)	NS	NS	10 U	10 U	10 U	10 U
Bis(2-Chloroethoxy) Methane	NS	NS	10 U	10 U	10 U	10 U
Bis(2-Chloroethyl) Ether (2-Chloroethyl Ether)	NS	NS	1 U	1 U	1 U	1 UJ
Bis(2-Chloroisopropyl) Ether	NS	NS	10 U	10 U	10 U	10 UJ
Bis(2-Ethylhexyl) Phthalate	NS	NS	2 U	2 U	2 U	2 U
Caprolactam	NS	NS	10 U	10 U	10 U	10 U
Carbazole	NS	NS	10 U	10 U	10 U	10 U
Chrysene	1	3.9	2 U	2 U	2 U	2 U
Dibenz(a,h)Anthracene	0.33	0.33	1 UJ	1 U	1 U	1 UJ
Dibenzofuran	7	59	10 U	10 U	10 U	10 U
Diethyl Phthalate	NS	NS	10 U	10 U	10 U	10 U
Dimethyl Phthalate	NS	NS	10 U	10 U	10 U	10 U
Di-N-Butyl Phthalate	NS	NS	10 U	10 U	10 U	10 U
Di-N-Octylphthalate	NS	NS	10 U	10 U	10 U	10 U
Fluoranthene	100	100	10 U	10 U	10 U	10 U
Fluorene	30	100	10 U	10 U	10 U	10 U
Hexachlorobenzene	0.33	1.2	1 U	1 U	1 U	1 U
Hexachlorobutadiene	NS	NS	1 U	1 U	1 U	1 UJ
Hexachlorocyclopentadiene	NS	NS	10 U	10 U	10 U	10 U
Hexachloroethane	NS	NS	2 U	2 U	2 UJ	2 U
Indeno(1,2,3-c,d)Pyrene	0.5	0.5	2 UJ	2 U	2 U	2 UJ
Isophorone	NS	NS	10 U	10 U	10 U	10 U
Naphthalene	12	100	10 U	10 U	10 U	10 U
Nitrobenzene	NS	NS	1 U	1 U	1 U	1 U
N-Nitrosodi-N-Propylamine	NS	NS	1 U	1 U	1 U	1 U
N-Nitrosodiphenylamine	NS	NS	10 U	10 U	10 U	10 U
Pentachlorophenol	0.8	6.7	20 UJ	20 U	20 U	20 U
Phenanthrene	100	100	10 U	10 U	10 U	10 U
Phenol	0.33	100	10 U	10 U	10 U	10 U
Pyrene	100	100	10 U	10 U	10 UJ	10 U

Attached Table 5
New 470 Project
12 Eckford Street
Brooklyn, New York
Site-Wide Endpoint Samples
Pesticides

AKRF Sample ID Sample Elevation Laboratory Sample ID Date Sampled Unit	NYSDEC UUSCO	NYSDEC RRSCO	EP-01_20190225 2.72 460-176028-1 2/25/2019 7:50:00 AM mg/kg	EP-02_20190225 2.19 460-176028-2 2/25/2019 8:00:00 AM mg/kg	EP-X01_20190225 2.19 460-176028-8 2/25/2019 9:30:00 AM mg/kg	EP-03_20190225 2.53 460-176028-3 2/25/2019 8:20:00 AM mg/kg
Aldrin	**0.005**	**0.097**	0.0074 U	0.0075 U	0.0074 U	0.0072 U
Alpha Bhc (Alpha Hexachlorocyclohexane)	**0.02**	**0.48**	0.0022 U	0.0022 U	0.0022 U	0.0022 U
Alpha Endosulfan	**NS**	**NS**	0.0074 U	0.0075 U	0.0074 U	0.0072 U
Beta Bhc (Beta Hexachlorocyclohexane)	**0.036**	**0.36**	0.0022 U	0.0022 U	0.0022 U	0.0022 U
Beta Endosulfan	**NS**	**NS**	0.0074 U	0.0075 U	0.0074 U	0.0072 U
Chlordane, Total	**NS**	**NS**	0.074 U	0.075 U	0.074 U	0.072 U
Delta BHC (Delta Hexachlorocyclohexane)	**0.04**	**100**	0.0022 U	0.0022 U	0.0022 U	0.0022 U
Dieldrin	**0.005**	**0.2**	0.0022 U	0.0022 U	0.0022 U	0.0022 U
Endosulfan Sulfate	**NS**	**NS**	0.0074 U	0.0075 U	0.0074 U	0.0072 U
Endrin	**0.014**	**11**	0.0074 U	0.0075 U	0.0074 U	0.0072 U
Endrin Aldehyde	**NS**	**NS**	0.0074 U	0.0075 U	0.0074 U	0.0072 U
Endrin Ketone	**NS**	**NS**	0.0074 U	0.0075 U	0.0074 U	0.0072 U
Gamma Bhc (Lindane)	**0.1**	**1.3**	0.0022 U	0.0022 U	0.0022 U	0.0022 U
Heptachlor	**0.042**	**2.1**	0.0074 U	0.0075 U	0.0074 U	0.0072 U
Heptachlor Epoxide	**NS**	**NS**	0.0074 U	0.0075 U	0.0074 U	0.0072 U
Methoxychlor	**NS**	**NS**	0.0074 U	0.0075 U	0.0074 U	0.0072 U
P,P'-DDD	**0.0033**	**13**	0.0074 U	0.0075 U	0.0074 U	0.0072 U
P,P'-DDE	**0.0033**	**8.9**	0.0074 U	0.0075 U	0.0074 U	0.0072 U
P,P'-DDT	**0.0033**	**7.9**	0.0074 U	0.0075 U	0.0074 U	0.0072 U
Toxaphene	**NS**	**NS**	0.074 U	0.075 U	0.074 U	0.072 U

Attached Table 5
New 470 Project
12 Eckford Street
Brooklyn, New York
Site-Wide Endpoint Samples
Pesticides

AKRF Sample ID Sample Elevation Laboratory Sample ID Date Sampled Unit	NYSDEC UUSCO	NYSDEC RRSCO	EP-04_20190225 2.71 460-176028-4 2/25/2019 8:30:00 AM mg/kg	EP-05_20190225 2.59 460-176028-5 2/25/2019 9:00:00 AM mg/kg	EP-06_20190225 2.66 460-176028-6 2/25/2019 8:45:00 AM mg/kg	EP-07_20190225 2.35 460-176028-7 2/25/2019 9:05:00 AM mg/kg
Aldrin	**0.005**	**0.097**	0.0074 U	0.0076 U	0.0072 U	0.0077 U
Alpha Bhc (Alpha Hexachlorocyclohexane)	**0.02**	**0.48**	0.0022 U	0.0023 U	0.0022 U	0.0023 U
Alpha Endosulfan	**NS**	**NS**	0.0074 U	0.0076 U	0.0072 U	0.0077 U
Beta Bhc (Beta Hexachlorocyclohexane)	**0.036**	**0.36**	0.0022 U	0.0023 U	0.0022 U	0.0023 U
Beta Endosulfan	**NS**	**NS**	0.0074 U	0.0076 U	0.0072 U	0.0077 U
Chlordane, Total	**NS**	**NS**	0.074 U	0.076 U	0.072 U	0.077 U
Delta BHC (Delta Hexachlorocyclohexane)	**0.04**	**100**	0.0022 U	0.0023 U	0.0022 U	0.0023 U
Dieldrin	**0.005**	**0.2**	0.0022 U	0.0023 U	0.0022 U	0.0023 U
Endosulfan Sulfate	**NS**	**NS**	0.0074 U	0.0076 U	0.0072 U	0.0077 U
Endrin	**0.014**	**11**	0.0074 U	0.0076 U	0.0072 U	0.0077 U
Endrin Aldehyde	**NS**	**NS**	0.0074 U	0.0076 U	0.0072 U	0.0077 U
Endrin Ketone	**NS**	**NS**	0.0074 U	0.0076 U	0.0072 U	0.0077 U
Gamma Bhc (Lindane)	**0.1**	**1.3**	0.0022 U	0.0023 U	0.0022 U	0.0023 U
Heptachlor	**0.042**	**2.1**	0.0074 U	0.0076 U	0.0072 U	0.0077 U
Heptachlor Epoxide	**NS**	**NS**	0.0074 U	0.0076 U	0.0072 U	0.0077 U
Methoxychlor	**NS**	**NS**	0.0074 U	0.0076 U	0.0072 U	0.0077 U
P,P'-DDD	**0.0033**	**13**	0.0074 U	0.0076 U	0.0072 U	0.0077 U
P,P'-DDE	**0.0033**	**8.9**	0.0074 U	0.0076 U	0.0072 U	0.0077 U
P,P'-DDT	**0.0033**	**7.9**	0.0074 U	0.0076 U	0.0072 U	0.0077 U
Toxaphene	**NS**	**NS**	0.074 U	0.076 U	0.072 U	0.077 U

Attached Table 5
New 470 Project
12 Eckford Street
Brooklyn, New York
Site-Wide Endpoint Samples
Pesticides

AKRF Sample ID Sample Elevation Laboratory Sample ID Date Sampled Unit	NYSDEC UUSCO	NYSDEC RRSCO	EP-08_20190403 12.56 460-178736-4 4/3/2019 8:00:00 AM mg/kg	EP-X02_20190403 12.56 460-178736-1 4/3/2019 11:00:00 AM mg/kg	EP-09_20190403 12.87 460-178736-5 4/3/2019 8:35:00 AM mg/kg	EP-10_20190403 11.91 460-178736-6 4/3/2019 8:45:00 AM mg/kg
Aldrin	**0.005**	**0.097**	0.0078 UJ	0.0078 U	0.008 U	0.0088 U
Alpha Bhc (Alpha Hexachlorocyclohexane)	**0.02**	**0.48**	0.0023 UJ	0.0023 U	0.0024 U	0.0026 U
Alpha Endosulfan	**NS**	**NS**	0.0078 UJ	0.0078 U	0.008 U	0.0088 U
Beta Bhc (Beta Hexachlorocyclohexane)	**0.036**	**0.36**	0.0023 UJ	0.0023 U	0.0024 U	0.0026 U
Beta Endosulfan	**NS**	**NS**	0.0078 UJ	0.0078 U	0.008 U	0.0088 U
Chlordane, Total	**NS**	**NS**	0.078 U	0.078 U	0.08 U	0.088 U
Delta BHC (Delta Hexachlorocyclohexane)	**0.04**	**100**	0.0023 UJ	0.0023 U	0.0024 U	0.0026 U
Dieldrin	**0.005**	**0.2**	0.0023 UJ	0.0023 U	0.0024 U	0.0026 U
Endosulfan Sulfate	**NS**	**NS**	0.0078 UJ	0.0078 U	0.008 U	0.0088 U
Endrin	**0.014**	**11**	0.0078 UJ	0.0078 U	0.008 U	0.0088 U
Endrin Aldehyde	**NS**	**NS**	0.0078 UJ	0.0078 U	0.008 U	0.0088 U
Endrin Ketone	**NS**	**NS**	0.0078 UJ	0.0078 U	0.008 U	0.0088 U
Gamma Bhc (Lindane)	**0.1**	**1.3**	0.0023 UJ	0.0023 U	0.0024 U	0.0026 U
Heptachlor	**0.042**	**2.1**	0.0078 UJ	0.0078 U	0.008 U	0.0088 U
Heptachlor Epoxide	**NS**	**NS**	0.0078 UJ	0.0078 U	0.008 U	0.0088 U
Methoxychlor	**NS**	**NS**	0.0078 UJ	0.0078 U	0.008 U	0.0088 U
P,P'-DDD	**0.0033**	**13**	0.0078 UJ	0.0078 U	0.008 U	0.0088 U
P,P'-DDE	**0.0033**	**8.9**	0.0078 UJ	0.0078 U	0.008 U	0.0088 U
P,P'-DDT	**0.0033**	**7.9**	0.0078 UJ	0.0078 U	0.008 U	0.0088 U
Toxaphene	**NS**	**NS**	0.078 U	0.078 U	0.08 U	0.088 U

Attached Table 5
New 470 Project
12 Eckford Street
Brooklyn, New York
Site-Wide Endpoint Samples
Pesticides

AKRF Sample ID Sample Elevation Laboratory Sample ID Date Sampled Unit	NYSDEC UUSCO	NYSDEC RRSCO	EP-11_20190403 13.05 460-178736-7 4/3/2019 9:15:00 AM mg/kg	EP-12_20190403 13.37 460-178736-8 4/3/2019 9:45:00 AM mg/kg	EP-13_20190403 12.35 460-178736-9 4/3/2019 10:00:00 AM mg/kg	EP-14_20190403 12.82 460-178736-10 4/3/2019 10:10:00 AM mg/kg
Aldrin	**0.005**	**0.097**	0.0091 U	0.008 U	0.0081 U	0.0082 U
Alpha Bhc (Alpha Hexachlorocyclohexane)	**0.02**	**0.48**	0.0027 U	0.0024 U	0.0024 U	0.0024 U
Alpha Endosulfan	**NS**	**NS**	0.0091 U	0.008 U	0.0081 U	0.0082 U
Beta Bhc (Beta Hexachlorocyclohexane)	**0.036**	**0.36**	0.0027 U	0.0024 U	0.0024 U	0.0024 U
Beta Endosulfan	**NS**	**NS**	0.0091 U	0.008 U	0.0081 U	0.0082 U
Chlordane, Total	**NS**	**NS**	0.091 U	0.08 U	0.081 U	0.082 U
Delta BHC (Delta Hexachlorocyclohexane)	**0.04**	**100**	0.0027 U	0.0024 U	0.0024 U	0.0024 U
Dieldrin	**0.005**	**0.2**	0.0027 U	0.0024 U	0.0024 U	0.0024 U
Endosulfan Sulfate	**NS**	**NS**	0.0091 U	0.008 U	0.0081 U	0.0082 U
Endrin	**0.014**	**11**	0.0091 U	0.008 U	0.0081 U	0.0082 U
Endrin Aldehyde	**NS**	**NS**	0.0091 U	0.008 U	0.0081 U	0.0082 U
Endrin Ketone	**NS**	**NS**	0.0091 U	0.008 U	0.0081 U	0.0082 U
Gamma Bhc (Lindane)	**0.1**	**1.3**	0.0027 U	0.0024 U	0.0024 U	0.0024 U
Heptachlor	**0.042**	**2.1**	0.0091 U	0.008 U	0.0081 U	0.0082 U
Heptachlor Epoxide	**NS**	**NS**	0.0091 U	0.008 U	0.0081 U	0.0082 U
Methoxychlor	**NS**	**NS**	0.0091 U	0.008 U	0.0081 U	0.0082 U
P,P'-DDD	**0.0033**	**13**	0.0091 U	0.008 U	0.0081 U	0.0082 U
P,P'-DDE	**0.0033**	**8.9**	0.0091 U	0.008 U	0.0081 U	0.0082 U
P,P'-DDT	**0.0033**	**7.9**	0.0091 U	0.008 U	0.0081 U	0.0082 U
Toxaphene	**NS**	**NS**	0.091 U	0.08 U	0.081 U	0.082 U

Attached Table 5
New 470 Project
12 Eckford Street
Brooklyn, New York
Site-Wide Endpoint Samples
Pesticides

AKRF Sample ID Sample Elevation Laboratory Sample ID Date Sampled Unit	NYSDEC UUSCO	NYSDEC RRSCO	EP-15_20190403 13.46 460-178736-11 4/3/2019 10:30:00 AM mg/kg	EP-16_20190403 13.36 460-178736-12 4/3/2019 1:00:00 PM mg/kg	EP-17_20190403 12.37 460-178736-13 4/3/2019 1:15:00 PM mg/kg	EP-18_20190403 14.20 460-178736-14 4/3/2019 1:45:00 PM mg/kg
Aldrin	**0.005**	**0.097**	0.0087 U	0.0075 U	0.0076 U	0.0073 U
Alpha Bhc (Alpha Hexachlorocyclohexane)	**0.02**	**0.48**	0.0026 U	0.0022 U	0.0023 U	0.0022 U
Alpha Endosulfan	**NS**	**NS**	0.0087 U	0.0075 U	0.0076 U	0.0073 U
Beta Bhc (Beta Hexachlorocyclohexane)	**0.036**	**0.36**	0.0026 U	0.0022 U	0.0023 U	0.0022 U
Beta Endosulfan	**NS**	**NS**	0.0087 U	0.0075 U	0.0076 U	0.0073 U
Chlordane, Total	**NS**	**NS**	0.087 U	0.075 U	0.076 U	0.073 U
Delta BHC (Delta Hexachlorocyclohexane)	**0.04**	**100**	0.0026 U	0.0022 U	0.0023 U	0.0022 U
Dieldrin	**0.005**	**0.2**	0.0026 U	0.0022 U	0.0023 U	0.0022 U
Endosulfan Sulfate	**NS**	**NS**	0.0087 U	0.0075 U	0.0076 U	0.0073 U
Endrin	**0.014**	**11**	0.0087 U	0.0075 U	0.0076 U	0.0073 U
Endrin Aldehyde	**NS**	**NS**	0.0087 U	0.0075 U	0.0076 U	0.0073 U
Endrin Ketone	**NS**	**NS**	0.0087 U	0.0075 U	0.0076 U	0.0073 U
Gamma Bhc (Lindane)	**0.1**	**1.3**	0.0026 U	0.0022 U	0.0023 U	0.0022 U
Heptachlor	**0.042**	**2.1**	0.0087 U	0.0075 U	0.0076 U	0.0073 U
Heptachlor Epoxide	**NS**	**NS**	0.0087 U	0.0075 U	0.0076 U	0.0073 U
Methoxychlor	**NS**	**NS**	0.0087 U	0.0075 U	0.0076 U	0.0073 U
P,P'-DDD	**0.0033**	**13**	0.0087 U	0.0075 U	0.0076 U	0.0073 U
P,P'-DDE	**0.0033**	**8.9**	0.0087 U	0.0075 U	0.0076 U	0.0073 U
P,P'-DDT	**0.0033**	**7.9**	0.0087 U	0.0075 U	0.0076 U	0.0073 U
Toxaphene	**NS**	**NS**	0.087 U	0.075 U	0.076 U	0.073 U

Attached Table 5
New 470 Project
12 Eckford Street
Brooklyn, New York
Site-Wide Endpoint Samples
Pesticides

AKRF Sample ID Sample Elevation Laboratory Sample ID Date Sampled Unit	NYSDEC UUSCO	NYSDEC RRSCO	EP-19_20190403 13.94 460-178736-15 4/3/2019 2:00:00 PM mg/kg	EP-20_20190403 13.51 460-178736-16 4/3/2019 2:15:00 PM mg/kg	EP-21_20190429 11.98 460-180693-1 4/29/2019 10:05:00 AM mg/kg	EP-X03_20190429 12.70 460-180693-3 4/29/2019 10:10:00 AM mg/kg
Aldrin	**0.005**	**0.097**	0.0078 U	0.0078 U	0.0079 U	0.0078 U
Alpha Bhc (Alpha Hexachlorocyclohexane)	**0.02**	**0.48**	0.0023 U	0.0023 U	0.0023 U	0.0023 U
Alpha Endosulfan	**NS**	**NS**	0.0078 U	0.0078 U	0.0079 U	0.0078 U
Beta Bhc (Beta Hexachlorocyclohexane)	**0.036**	**0.36**	0.0023 U	0.0023 U	0.0023 U	0.0023 U
Beta Endosulfan	**NS**	**NS**	0.0078 U	0.0078 U	0.0079 U	0.0078 U
Chlordane, Total	**NS**	**NS**	0.078 U	0.078 U	0.079 U	0.078 U
Delta BHC (Delta Hexachlorocyclohexane)	**0.04**	**100**	0.0023 U	0.0023 U	0.0023 U	0.0023 U
Dieldrin	**0.005**	**0.2**	0.0023 U	0.0023 U	0.0023 U	0.0023 U
Endosulfan Sulfate	**NS**	**NS**	0.0078 U	0.0078 U	0.0079 U	0.0078 U
Endrin	**0.014**	**11**	0.0078 U	0.0078 U	0.0079 U	0.0078 U
Endrin Aldehyde	**NS**	**NS**	0.0078 U	0.0078 U	0.0079 UJ	0.0078 U
Endrin Ketone	**NS**	**NS**	0.0078 U	0.0078 U	0.0079 U	0.0078 U
Gamma Bhc (Lindane)	**0.1**	**1.3**	0.0023 U	0.0023 U	0.0023 U	0.0023 U
Heptachlor	**0.042**	**2.1**	0.0078 U	0.0078 U	0.0079 U	0.0078 U
Heptachlor Epoxide	**NS**	**NS**	0.0078 U	0.0078 U	0.0079 U	0.0078 U
Methoxychlor	**NS**	**NS**	0.0078 U	0.0078 U	0.0079 U	0.0078 U
P,P'-DDD	**0.0033**	**13**	0.0078 U	0.0078 U	0.0079 U	0.0078 U
P,P'-DDE	**0.0033**	**8.9**	0.0078 U	0.0078 U	0.0079 U	0.0078 U
P,P'-DDT	**0.0033**	**7.9**	0.0078 U	0.0078 U	0.0079 U	0.0078 U
Toxaphene	**NS**	**NS**	0.078 U	0.078 U	0.079 U	0.078 U

Attached Table 5
New 470 Project
12 Eckford Street
Brooklyn, New York
Site-Wide Endpoint Samples
Pesticides

AKRF Sample ID Sample Elevation Laboratory Sample ID Date Sampled Unit	NYSDEC UUSCO	NYSDEC RRSCO	EP-22_20190429 12.70 460-180693-2 4/29/2019 10:15:00 AM mg/kg	EP-23_20190701 16.45 460-185721-1 7/1/2019 12:35:00 PM mg/kg	EP-24_20190701 15.93 460-185721-2 7/1/2019 12:45:00 PM mg/kg	EP-X04_20190701 15.93 460-185721-3 7/1/2019 12:55:00 PM mg/kg
Aldrin	**0.005**	**0.097**	0.0078 U	0.0076 U	0.0074 U	0.0076 U
Alpha Bhc (Alpha Hexachlorocyclohexane)	**0.02**	**0.48**	0.0023 U	0.0023 U	0.0022 U	0.0023 U
Alpha Endosulfan	**NS**	**NS**	0.0078 U	0.0076 U	0.0074 U	0.0076 U
Beta Bhc (Beta Hexachlorocyclohexane)	**0.036**	**0.36**	0.0023 U	0.0023 U	0.0022 U	0.0023 U
Beta Endosulfan	**NS**	**NS**	0.0078 U	0.0076 U	0.0074 U	0.0076 U
Chlordane, Total	**NS**	**NS**	0.078 U	0.064 J	0.062 J	0.05 J
Delta BHC (Delta Hexachlorocyclohexane)	**0.04**	**100**	0.0023 U	0.0023 U	0.0022 U	0.0023 U
Dieldrin	**0.005**	**0.2**	0.0023 U	0.0023 U	0.0023	0.0023 U
Endosulfan Sulfate	**NS**	**NS**	0.0078 U	0.0076 U	0.0074 UJ	0.0076 UJ
Endrin	**0.014**	**11**	0.0078 U	0.0076 U	0.0074 U	0.0076 U
Endrin Aldehyde	**NS**	**NS**	0.0078 U	0.0076 U	0.0074 UJ	0.0076 UJ
Endrin Ketone	**NS**	**NS**	0.0078 U	0.0076 U	0.0074 U	0.0076 U
Gamma Bhc (Lindane)	**0.1**	**1.3**	0.0023 U	0.0023 U	0.0022 U	0.0023 U
Heptachlor	**0.042**	**2.1**	0.0078 U	0.0076 U	0.0074 U	0.0076 U
Heptachlor Epoxide	**NS**	**NS**	0.0078 U	0.0076 U	0.0074 U	0.0076 U
Methoxychlor	**NS**	**NS**	0.0078 U	0.0076 U	0.0074 U	0.0076 U
P,P'-DDD	**0.0033**	**13**	0.0078 U	0.0076 U	0.0074 U	0.0076 U
P,P'-DDE	**0.0033**	**8.9**	0.0078 U	0.0031 J	**0.005 J**	**0.0054 J**
P,P'-DDT	**0.0033**	**7.9**	0.0078 U	0.0024 J	0.0025 J	0.0026 J
Toxaphene	**NS**	**NS**	0.078 U	0.076 U	0.074 U	0.076 U

Attached Table 5
New 470 Project
12 Eckford Street
Brooklyn, New York
Site-Wide Endpoint Samples
Pesticides

AKRF Sample ID Sample Elevation Laboratory Sample ID Date Sampled Unit	NYSDEC UUSCO	NYSDEC RRSCO	EP-FB-01_20190225 N/A 460-176028-9 2/25/2019 9:50:00 AM ug/L	EP-FB-02_20190403 N/A 460-178736-2 4/3/2019 12:00:00 PM ug/L	EP-FB-03_20190429 N/A 460-180693-4 4/29/2019 11:40:00 AM ug/L	EP-FB-04_20190701 N/A 460-185721-4 7/1/2019 1:05:00 PM ug/L
Aldrin	**0.005**	**0.097**	0.02 U	0.02 U	0.02 U	0.02 U
Alpha Bhc (Alpha Hexachlorocyclohexane)	**0.02**	**0.48**	0.02 U	0.02 U	0.02 U	0.02 U
Alpha Endosulfan	**NS**	**NS**	0.02 U	0.02 U	0.02 U	0.02 U
Beta Bhc (Beta Hexachlorocyclohexane)	**0.036**	**0.36**	0.02 U	0.02 U	0.02 U	0.02 U
Beta Endosulfan	**NS**	**NS**	0.02 U	0.02 U	0.02 U	0.02 U
Chlordane, Total	**NS**	**NS**	0.5 U	0.5 U	0.5 U	0.5 U
Delta BHC (Delta Hexachlorocyclohexane)	**0.04**	**100**	0.02 U	0.02 U	0.02 U	0.02 U
Dieldrin	**0.005**	**0.2**	0.02 U	0.02 U	0.02 U	0.02 U
Endosulfan Sulfate	**NS**	**NS**	0.02 U	0.02 U	0.02 U	0.02 U
Endrin	**0.014**	**11**	0.02 U	0.02 U	0.02 U	0.02 U
Endrin Aldehyde	**NS**	**NS**	0.02 U	0.02 U	0.02 U	0.02 U
Endrin Ketone	**NS**	**NS**	0.02 U	0.02 U	0.02 U	0.02 U
Gamma Bhc (Lindane)	**0.1**	**1.3**	0.02 U	0.02 U	0.02 U	0.02 U
Heptachlor	**0.042**	**2.1**	0.02 U	0.02 U	0.02 U	0.02 U
Heptachlor Epoxide	**NS**	**NS**	0.02 U	0.02 U	0.02 U	0.02 U
Methoxychlor	**NS**	**NS**	0.02 U	0.02 U	0.02 U	0.02 U
P,P'-DDD	**0.0033**	**13**	0.02 U	0.02 U	0.02 U	0.02 U
P,P'-DDE	**0.0033**	**8.9**	0.02 U	0.02 U	0.02 U	0.02 U
P,P'-DDT	**0.0033**	**7.9**	0.02 U	**0.069**	0.02 U	0.02 U
Toxaphene	**NS**	**NS**	0.5 U	0.5 U	0.5 U	0.5 U

Attached Table 6
New 470 Project
12 Eckford Street
Brooklyn, New York
Site-Wide Endpoint Samples
Polychlorinated Biphenyls

AKRF Sample ID **Sample Elevation** **Laboratory Sample ID** **Date Sampled** **Unit**	**NYSDEC UUSCO**	**NYSDEC RRSCO**	**EP-01_20190225** **2.72** **460-176028-1** **2/25/2019 7:50:00 AM** **mg/kg**	**EP-02_20190225** **2.19** **460-176028-2** **2/25/2019 8:00:00 AM** **mg/kg**	**EP-X01_20190225** **2.19** **460-176028-8** **2/25/2019 9:30:00 AM** **mg/kg**	**EP-03_20190225** **2.53** **460-176028-3** **2/25/2019 8:20:00 AM** **mg/kg**	**EP-04_20190225** **2.71** **460-176028-4** **2/25/2019 8:30:00 AM** **mg/kg**
PCB-1016 (Aroclor 1016)	**NS**	**NS**	0.074 U	0.075 U	0.074 U	0.072 U	0.074 U
PCB-1221 (Aroclor 1221)	**NS**	**NS**	0.074 U	0.075 U	0.074 U	0.072 U	0.074 U
PCB-1232 (Aroclor 1232)	**NS**	**NS**	0.074 U	0.075 U	0.074 U	0.072 U	0.074 U
PCB-1242 (Aroclor 1242)	**NS**	**NS**	0.074 U	0.075 U	0.074 U	0.072 U	0.074 U
PCB-1248 (Aroclor 1248)	**NS**	**NS**	0.074 U	0.075 U	0.074 U	0.072 U	0.074 U
PCB-1254 (Aroclor 1254)	**NS**	**NS**	0.074 U	0.075 U	0.074 U	0.072 U	0.074 U
PCB-1260 (Aroclor 1260)	**NS**	**NS**	0.074 U	0.075 U	0.074 U	0.072 U	0.074 U
PCB-1262 (Aroclor 1262)	**NS**	**NS**	0.074 U	0.075 U	0.074 U	0.072 U	0.074 U
PCB-1268 (Aroclor 1268)	**NS**	**NS**	0.074 U	0.075 U	0.074 U	0.072 U	0.074 U
Total PCBs	**0.1**	**1**	0.074 U	0.075 U	0.074 U	0.072 U	0.074 U

Attached Table 6
New 470 Project
12 Eckford Street
Brooklyn, New York
Site-Wide Endpoint Samples
Polychlorinated Biphenyls

AKRF Sample ID **Sample Elevation** **Laboratory Sample ID** **Date Sampled** **Unit**	**NYSDEC UUSCO**	**NYSDEC RRSCO**	**EP-05_20190225** **2.59** **460-176028-5** **2/25/2019 9:00:00 AM** **mg/kg**	**EP-06_20190225** **2.66** **460-176028-6** **2/25/2019 8:45:00 AM** **mg/kg**	**EP-07_20190225** **2.35** **460-176028-7** **2/25/2019 9:05:00 AM** **mg/kg**	**EP-08_20190403** **12.56** **460-178736-4** **4/3/2019 8:00:00 AM** **mg/kg**	**EP-X02_20190403** **12.56** **460-178736-1** **4/3/2019 11:00:00 AM** **mg/kg**
PCB-1016 (Aroclor 1016)	**NS**	**NS**	0.076 U	0.072 U	0.077 U	0.078 U	0.078 U
PCB-1221 (Aroclor 1221)	**NS**	**NS**	0.076 U	0.072 U	0.077 U	0.078 U	0.078 U
PCB-1232 (Aroclor 1232)	**NS**	**NS**	0.076 U	0.072 U	0.077 U	0.078 U	0.078 U
PCB-1242 (Aroclor 1242)	**NS**	**NS**	0.076 U	0.072 U	0.077 U	0.078 U	0.078 U
PCB-1248 (Aroclor 1248)	**NS**	**NS**	0.076 U	0.072 U	0.077 U	0.078 U	0.078 U
PCB-1254 (Aroclor 1254)	**NS**	**NS**	0.076 U	0.072 U	0.077 U	0.078 U	0.078 U
PCB-1260 (Aroclor 1260)	**NS**	**NS**	0.076 U	0.072 U	0.077 U	0.078 U	0.078 U
PCB-1262 (Aroclor 1262)	**NS**	**NS**	0.076 U	0.072 U	0.077 U	0.078 U	0.078 U
PCB-1268 (Aroclor 1268)	**NS**	**NS**	0.076 U	0.072 U	0.077 U	0.078 U	0.078 U
Total PCBs	**0.1**	**1**	0.076 U	0.072 U	0.077 U	0.078 U	0.078 U

Attached Table 6
New 470 Project
12 Eckford Street
Brooklyn, New York
Site-Wide Endpoint Samples
Polychlorinated Biphenyls

AKRF Sample ID Sample Elevation Laboratory Sample ID Date Sampled Unit	NYSDEC UUSCO	NYSDEC RRSCO	EP-09_20190403 12.87 460-178736-5 4/3/2019 8:35:00 AM mg/kg	EP-10_20190403 11.91 460-178736-6 4/3/2019 8:45:00 AM mg/kg	EP-11_20190403 13.05 460-178736-7 4/3/2019 9:15:00 AM mg/kg	EP-12_20190403 13.37 460-178736-8 4/3/2019 9:45:00 AM mg/kg	EP-13_20190403 12.35 460-178736-9 4/3/2019 10:00:00 AM mg/kg
PCB-1016 (Aroclor 1016)	**NS**	**NS**	0.08 U	0.088 U	0.091 U	0.08 U	0.081 U
PCB-1221 (Aroclor 1221)	**NS**	**NS**	0.08 U	0.088 U	0.091 U	0.08 U	0.081 U
PCB-1232 (Aroclor 1232)	**NS**	**NS**	0.08 U	0.088 U	0.091 U	0.08 U	0.081 U
PCB-1242 (Aroclor 1242)	**NS**	**NS**	0.08 U	0.088 U	0.091 U	0.08 U	0.081 U
PCB-1248 (Aroclor 1248)	**NS**	**NS**	0.08 U	0.088 U	0.091 U	0.08 U	0.081 U
PCB-1254 (Aroclor 1254)	**NS**	**NS**	0.08 U	0.088 U	0.091 U	0.08 U	0.081 U
PCB-1260 (Aroclor 1260)	**NS**	**NS**	0.08 U	0.088 U	0.091 U	0.08 U	0.081 U
PCB-1262 (Aroclor 1262)	**NS**	**NS**	0.08 U	0.088 U	0.091 U	0.08 U	0.081 U
PCB-1268 (Aroclor 1268)	**NS**	**NS**	0.08 U	0.088 U	0.091 U	0.08 U	0.081 U
Total PCBs	**0.1**	**1**	0.08 U	0.088 U	0.091 U	0.08 U	0.081 U

Attached Table 6
New 470 Project
12 Eckford Street
Brooklyn, New York
Site-Wide Endpoint Samples
Polychlorinated Biphenyls

AKRF Sample ID Sample Elevation Laboratory Sample ID Date Sampled Unit	NYSDEC UUSCO	NYSDEC RRSCO	EP-14_20190403 12.82 460-178736-10 4/3/2019 10:10:00 AM mg/kg	EP-15_20190403 13.46 460-178736-11 4/3/2019 10:30:00 AM mg/kg	EP-16_20190403 13.36 460-178736-12 4/3/2019 1:00:00 PM mg/kg	EP-17_20190403 12.37 460-178736-13 4/3/2019 1:15:00 PM mg/kg	EP-18_20190403 14.20 460-178736-14 4/3/2019 1:45:00 PM mg/kg
PCB-1016 (Aroclor 1016)	**NS**	**NS**	0.082 U	0.087 U	0.075 U	0.076 U	0.073 U
PCB-1221 (Aroclor 1221)	**NS**	**NS**	0.082 U	0.087 U	0.075 U	0.076 U	0.073 U
PCB-1232 (Aroclor 1232)	**NS**	**NS**	0.082 U	0.087 U	0.075 U	0.076 U	0.073 U
PCB-1242 (Aroclor 1242)	**NS**	**NS**	0.082 U	0.087 U	0.075 U	0.076 U	0.073 U
PCB-1248 (Aroclor 1248)	**NS**	**NS**	0.082 U	0.087 U	0.075 U	0.076 U	0.073 U
PCB-1254 (Aroclor 1254)	**NS**	**NS**	0.082 U	0.087 U	0.075 U	0.076 U	0.073 U
PCB-1260 (Aroclor 1260)	**NS**	**NS**	0.082 U	0.087 U	0.075 U	0.076 U	0.073 U
PCB-1262 (Aroclor 1262)	**NS**	**NS**	0.082 U	0.087 U	0.075 U	0.076 U	0.073 U
PCB-1268 (Aroclor 1268)	**NS**	**NS**	0.082 U	0.087 U	0.075 U	0.076 U	0.073 U
Total PCBs	**0.1**	**1**	0.082 U	0.087 U	0.075 U	0.076 U	0.073 U

Attached Table 6
New 470 Project
12 Eckford Street
Brooklyn, New York
Site-Wide Endpoint Samples
Polychlorinated Biphenyls

AKRF Sample ID Sample Elevation Laboratory Sample ID Date Sampled Unit	NYSDEC UUSCO	NYSDEC RRSCO	EP-19_20190403 13.94 460-178736-15 4/3/2019 2:00:00 PM mg/kg	EP-20_20190403 13.51 460-178736-16 4/3/2019 2:15:00 PM mg/kg	EP-21_20190429 11.98 460-180693-1 4/29/2019 10:05:00 AM mg/kg	EP-X03_20190429 12.70 460-180693-3 4/29/2019 10:10:00 AM mg/kg
PCB-1016 (Aroclor 1016)	**NS**	**NS**	0.078 U	0.078 U	0.079 U	0.078 U
PCB-1221 (Aroclor 1221)	**NS**	**NS**	0.078 U	0.078 U	0.079 U	0.078 U
PCB-1232 (Aroclor 1232)	**NS**	**NS**	0.078 U	0.078 U	0.079 U	0.078 U
PCB-1242 (Aroclor 1242)	**NS**	**NS**	0.078 U	0.078 U	0.079 U	0.078 U
PCB-1248 (Aroclor 1248)	**NS**	**NS**	0.078 U	0.078 U	0.079 U	0.078 U
PCB-1254 (Aroclor 1254)	**NS**	**NS**	0.078 U	0.078 U	0.079 U	0.078 U
PCB-1260 (Aroclor 1260)	**NS**	**NS**	0.078 U	0.078 U	0.079 U	0.078 U
PCB-1262 (Aroclor 1262)	**NS**	**NS**	0.078 U	0.078 U	0.079 U	0.078 U
PCB-1268 (Aroclor 1268)	**NS**	**NS**	0.078 U	0.078 U	0.079 U	0.078 U
Total PCBs	**0.1**	**1**	0.078 U	0.078 U	0.079 U	0.078 U

Attached Table 6
New 470 Project
12 Eckford Street
Brooklyn, New York
Site-Wide Endpoint Samples
Polychlorinated Biphenyls

AKRF Sample ID Sample Elevation Laboratory Sample ID Date Sampled Unit	NYSDEC UUSCO	NYSDEC RRSCO	EP-22_20190429 12.70 460-180693-2 4/29/2019 10:15:00 AM mg/kg	EP-23_20190701 16.45 460-185721-1 7/1/2019 12:35:00 PM mg/kg	EP-24_20190701 15.93 460-185721-2 7/1/2019 12:45:00 PM mg/kg	EP-X04_20190701 15.93 460-185721-3 7/1/2019 12:55:00 PM mg/kg
PCB-1016 (Aroclor 1016)	**NS**	**NS**	0.078 U	0.076 U	0.074 U	0.076 U
PCB-1221 (Aroclor 1221)	**NS**	**NS**	0.078 U	0.076 U	0.074 U	0.076 U
PCB-1232 (Aroclor 1232)	**NS**	**NS**	0.078 U	0.076 U	0.074 U	0.076 U
PCB-1242 (Aroclor 1242)	**NS**	**NS**	0.078 U	0.076 U	0.074 U	0.076 U
PCB-1248 (Aroclor 1248)	**NS**	**NS**	0.078 U	0.076 U	0.074 U	0.076 U
PCB-1254 (Aroclor 1254)	**NS**	**NS**	0.078 U	0.076 U	0.074 U	0.076 U
PCB-1260 (Aroclor 1260)	**NS**	**NS**	0.078 U	0.076 U	0.074 U	0.076 U
PCB-1262 (Aroclor 1262)	**NS**	**NS**	0.078 U	0.076 U	0.074 U	0.076 U
PCB-1268 (Aroclor 1268)	**NS**	**NS**	0.078 U	0.076 U	0.074 U	0.076 U
Total PCBs	**0.1**	**1**	0.078 U	0.076 U	0.074 U	0.076 U

Attached Table 6
New 470 Project
12 Eckford Street
Brooklyn, New York
Site-Wide Endpoint Samples
Polychlorinated Biphenyls

AKRF Sample ID Sample Elevation Laboratory Sample ID Date Sampled Unit	NYSDEC UUSCO	NYSDEC RRSCO	EP-FB-01_20190225 N/A 460-176028-9 2/25/2019 9:50:00 AM ug/L	EP-FB-02_20190403 N/A 460-178736-2 4/3/2019 12:00:00 PM ug/L	EP-FB-03_20190429 N/A 460-180693-4 4/29/2019 11:40:00 AM ug/L	EP-FB-04_20190701 N/A 460-185721-4 7/1/2019 1:05:00 PM ug/L
PCB-1016 (Aroclor 1016)	**NS**	**NS**	0.4 U	0.4 U	0.4 U	0.4 U
PCB-1221 (Aroclor 1221)	**NS**	**NS**	0.4 U	0.4 U	0.4 U	0.4 U
PCB-1232 (Aroclor 1232)	**NS**	**NS**	0.4 U	0.4 U	0.4 U	0.4 U
PCB-1242 (Aroclor 1242)	**NS**	**NS**	0.4 U	0.4 U	0.4 U	0.4 U
PCB-1248 (Aroclor 1248)	**NS**	**NS**	0.4 U	0.4 U	0.4 U	0.4 U
PCB-1254 (Aroclor 1254)	**NS**	**NS**	0.4 U	0.4 U	0.4 U	0.4 U
PCB-1260 (Aroclor 1260)	**NS**	**NS**	0.4 U	0.4 U	0.4 U	0.4 U
PCB-1262 (Aroclor 1262)	**NS**	**NS**	0.4 U	0.4 U	0.4 U	0.4 U
PCB-1268 (Aroclor 1268)	**NS**	**NS**	0.4 U	0.4 U	0.4 U	0.4 U
Total PCBs	**0.1**	**1**	0.4 U	0.4 U	0.4 U	0.4 U

Attached Table 7
New 470 Project
12 Eckford Street
Brooklyn, New York
Site-Wide Endpoint Samples
Metals

AKRF Sample ID Sample Elevation Laboratory Sample ID Date Sampled Unit Dilution Factor	NYSDEC UUSCO	NYSDEC RRSCO	EP-01_20190225 2.72 460-176028-1 2/25/2019 7:50:00 AM mg/kg 1	EP-01_20190225 2.72 460-176028-1 2/25/2019 7:50:00 AM mg/kg 4	EP-02_20190225 2.19 460-176028-2 2/25/2019 8:00:00 AM mg/kg 1	EP-02_20190225 2.19 460-176028-2 2/25/2019 8:00:00 AM mg/kg 4	EP-X01_20190225 2.19 460-176028-8 2/25/2019 9:30:00 AM mg/kg 1
Aluminum	**NS**	**NS**	NR	4690	NR	7220 J	NR
Antimony	**NS**	**NS**	NR	4.1 U	NR	4.3 UJ	NR
Arsenic	**13**	**16**	NR	2.4 J	NR	3.7 J	NR
Barium	**350**	**400**	NR	38.3 J	NR	37.1 J	NR
Beryllium	**7.2**	**72**	NR	0.32 J	NR	0.38 J	NR
Cadmium	**2.5**	**4.3**	NR	0.45 J	NR	0.45 J	NR
Calcium	**NS**	**NS**	NR	1580	NR	1040 J	NR
Chromium, Total	**NS**	**NS**	NR	15.7	NR	16.1	NR
Cobalt	**NS**	**NS**	NR	4.9 J	NR	7 J	NR
Copper	**50**	**270**	NR	22	NR	21.1	NR
Iron	**NS**	**NS**	NR	18500	NR	19900 JL	NR
Lead	**63**	**400**	NR	50.5	NR	47.7 JL	NR
Magnesium	**NS**	**NS**	NR	1900	NR	1640	NR
Manganese	**1600**	**2000**	NR	328	NR	364	NR
Mercury	**0.18**	**0.81**	**0.37**	NR	**0.37 JK**	NR	**0.26 J**
Nickel	**30**	**310**	NR	10	NR	11	NR
Potassium	**NS**	**NS**	NR	546 J	NR	635 J	NR
Selenium	**3.9**	**180**	NR	4.1 U	NR	4.3 U	NR
Silver	**2**	**180**	NR	2.1 U	NR	2.2 U	NR
Sodium	**NS**	**NS**	NR	1030 U	NR	1080 U	NR
Thallium	**NS**	**NS**	NR	4.1 U	NR	4.3 U	NR
Vanadium	**NS**	**NS**	NR	19.3	NR	20.8	NR
Zinc	**109**	**10000**	NR	46.4	NR	64.6 JL	NR

Attached Table 7
New 470 Project
12 Eckford Street
Brooklyn, New York
Site-Wide Endpoint Samples
Metals

AKRF Sample ID Sample Elevation Laboratory Sample ID Date Sampled Unit Dilution Factor	NYSDEC UUSCO	NYSDEC RRSCO	EP-X01_20190225 2.19 460-176028-8 2/25/2019 9:30:00 AM mg/kg 4	EP-03_20190225 2.53 460-176028-3 2/25/2019 8:20:00 AM mg/kg 1	EP-03_20190225 2.53 460-176028-3 2/25/2019 8:20:00 AM mg/kg 4	EP-04_20190225 2.71 460-176028-4 2/25/2019 8:30:00 AM mg/kg 1	EP-04_20190225 2.71 460-176028-4 2/25/2019 8:30:00 AM mg/kg 4
Aluminum	**NS**	**NS**	5220 JL	NR	5240	NR	5760
Antimony	**NS**	**NS**	4.1 UJ	NR	4.3 U	NR	4.2 U
Arsenic	**13**	**16**	2.4 JL	NR	4.4	NR	3.7
Barium	**350**	**400**	37 J	NR	49.4	NR	40 J
Beryllium	**7.2**	**72**	0.37 J	NR	0.34 J	NR	0.41 J
Cadmium	**2.5**	**4.3**	0.6 J	NR	0.54 J	NR	0.58 J
Calcium	**NS**	**NS**	970 J	NR	1460	NR	3280
Chromium, Total	**NS**	**NS**	16	NR	23	NR	17.9
Cobalt	**NS**	**NS**	5.7 J	NR	5.4 J	NR	5.2 J
Copper	**50**	**270**	17.9	NR	23.4	NR	24.7
Iron	**NS**	**NS**	26200 J	NR	23800	NR	21900
Lead	**63**	**400**	**74.2 J**	NR	61.1	NR	58.5
Magnesium	**NS**	**NS**	1370	NR	1720	NR	1640
Manganese	**1600**	**2000**	450	NR	368	NR	418
Mercury	**0.18**	**0.81**	NR	**0.3**	NR	**0.35**	NR
Nickel	**30**	**310**	10.7	NR	11	NR	10.8
Potassium	**NS**	**NS**	513 J	NR	782 J	NR	654 J
Selenium	**3.9**	**180**	4.1 U	NR	4.3 U	NR	4.2 U
Silver	**2**	**180**	2 U	NR	2.2 U	NR	2.1 U
Sodium	**NS**	**NS**	1020 U	NR	1080 U	NR	1060 U
Thallium	**NS**	**NS**	4.1 U	NR	4.3 U	NR	4.2 U
Vanadium	**NS**	**NS**	22.3	NR	26.7	NR	22.9
Zinc	**109**	**10000**	51.6 JL	NR	52.1	NR	86.5

Attached Table 7
New 470 Project
12 Eckford Street
Brooklyn, New York
Site-Wide Endpoint Samples
Metals

AKRF Sample ID			EP-05_20190225	EP-05_20190225	EP-06_20190225	EP-06_20190225	EP-07_20190225
Sample Elevation			2.59	2.59	2.66	2.66	2.35
Laboratory Sample ID	NYSDEC	NYSDEC	460-176028-5	460-176028-5	460-176028-6	460-176028-6	460-176028-7
Date Sampled	UUSCO	RRSCO	2/25/2019 9:00:00 AM	2/25/2019 9:00:00 AM	2/25/2019 8:45:00 AM	2/25/2019 8:45:00 AM	2/25/2019 9:05:00 AM
Unit			mg/kg	mg/kg	mg/kg	mg/kg	mg/kg
Dilution Factor			1	4	1	4	1
Aluminum	**NS**	**NS**	NR	4720	NR	5510	NR
Antimony	**NS**	**NS**	NR	4.4 U	NR	4 U	NR
Arsenic	**13**	**16**	NR	4.1	NR	5.5	NR
Barium	**350**	**400**	NR	53.3	NR	56.7	NR
Beryllium	**7.2**	**72**	NR	0.33 J	NR	0.34 J	NR
Cadmium	**2.5**	**4.3**	NR	0.48 J	NR	0.52 J	NR
Calcium	**NS**	**NS**	NR	1760	NR	1520	NR
Chromium, Total	**NS**	**NS**	NR	13.5	NR	15.2	NR
Cobalt	**NS**	**NS**	NR	5 J	NR	6 J	NR
Copper	**50**	**270**	NR	33.2	NR	31.8	NR
Iron	**NS**	**NS**	NR	18300	NR	18900	NR
Lead	**63**	**400**	NR	**108**	NR	**94.5**	NR
Magnesium	**NS**	**NS**	NR	1400	NR	1610	NR
Manganese	**1600**	**2000**	NR	308	NR	378	NR
Mercury	**0.18**	**0.81**	**0.58**	NR	**0.49**	NR	**0.67**
Nickel	**30**	**310**	NR	10.4	NR	11.3	NR
Potassium	**NS**	**NS**	NR	537 J	NR	685 J	NR
Selenium	**3.9**	**180**	NR	4.4 U	NR	4 U	NR
Silver	**2**	**180**	NR	2.2 U	NR	2 U	NR
Sodium	**NS**	**NS**	NR	1110 U	NR	1010 U	NR
Thallium	**NS**	**NS**	NR	4.4 U	NR	4 U	NR
Vanadium	**NS**	**NS**	NR	18.5	NR	19.3	NR
Zinc	**109**	**10000**	NR	83.7	NR	74.5	NR

Attached Table 7
New 470 Project
12 Eckford Street
Brooklyn, New York
Site-Wide Endpoint Samples
Metals

AKRF Sample ID			EP-07_20190225	EP-08_20190403	EP-08_20190403	EP-X02_20190403	EP-X02_20190403
Sample Elevation			2.35	12.56	12.56	12.56	12.56
Laboratory Sample ID	NYSDEC	NYSDEC	460-176028-7	460-178736-4	460-178736-4	460-178736-1	460-178736-1
Date Sampled	UUSCO	RRSCO	2/25/2019 9:05:00 AM	4/3/2019 8:00:00 AM	4/3/2019 8:00:00 AM	4/3/2019 11:00:00 AM	4/3/2019 11:00:00 AM
Unit			mg/kg	mg/kg	mg/kg	mg/kg	mg/kg
Dilution Factor			4	4	5	3	4
Aluminum	**NS**	**NS**	5300	7490	NR	NR	7160
Antimony	**NS**	**NS**	4.3 U	3.8 UJ	NR	NR	3.6 U
Arsenic	**13**	**16**	5.6	7.5	NR	NR	6.8
Barium	**350**	**400**	74.2	123	NR	NR	127
Beryllium	**7.2**	**72**	0.37 J	0.48	NR	NR	0.55
Cadmium	**2.5**	**4.3**	0.59 J	0.76 U	NR	NR	0.12 J
Calcium	**NS**	**NS**	2620	9850	NR	NR	9950
Chromium, Total	**NS**	**NS**	14.8	20.7	NR	NR	20.3
Cobalt	**NS**	**NS**	5.3 J	6.6 J	NR	NR	6.4 J
Copper	**50**	**270**	36.6	**98.1**	NR	NR	**110**
Iron	**NS**	**NS**	20700	22400	NR	NR	20100
Lead	**63**	**400**	**284**	**328**	NR	NR	**283**
Magnesium	**NS**	**NS**	1580	2190	NR	NR	2240
Manganese	**1600**	**2000**	358	343	NR	NR	329
Mercury	**0.18**	**0.81**	NR	NR	**1.9**	**1.5**	NR
Nickel	**30**	**310**	11.6	16	NR	NR	15.9
Potassium	**NS**	**NS**	623 J	1000	NR	NR	933
Selenium	**3.9**	**180**	4.3 U	3.8 U	NR	NR	3.6 U
Silver	**2**	**180**	2.1 U	0.49 J	NR	NR	0.85 J
Sodium	**NS**	**NS**	103 J	147 J	NR	NR	154 J
Thallium	**NS**	**NS**	4.3 U	3.8 U	NR	NR	3.6 U
Vanadium	**NS**	**NS**	19.5	25.4	NR	NR	23.4
Zinc	**109**	**10000**	100	**195**	NR	NR	**257**

Attached Table 7
New 470 Project
12 Eckford Street
Brooklyn, New York
Site-Wide Endpoint Samples
Metals

AKRF Sample ID			EP-09_20190403	EP-09_20190403	EP-10_20190403	EP-10_20190403	EP-11_20190403
Sample Elevation			12.87	12.87	11.91	11.91	13.05
Laboratory Sample ID	NYSDEC	NYSDEC	460-178736-5	460-178736-5	460-178736-6	460-178736-6	460-178736-7
Date Sampled	UUSCO	RRSCO	4/3/2019 8:35:00 AM	4/3/2019 8:35:00 AM	4/3/2019 8:45:00 AM	4/3/2019 8:45:00 AM	4/3/2019 9:15:00 AM
Unit			mg/kg	mg/kg	mg/kg	mg/kg	mg/kg
Dilution Factor			3	4	1	4	3
Aluminum	**NS**	**NS**	NR	7390	NR	8420	NR
Antimony	**NS**	**NS**	NR	3.8 U	NR	3.9 U	NR
Arsenic	**13**	**16**	NR	5.5	NR	5	NR
Barium	**350**	**400**	NR	102	NR	95.6	NR
Beryllium	**7.2**	**72**	NR	0.43	NR	0.48	NR
Cadmium	**2.5**	**4.3**	NR	0.76 U	NR	0.78 U	NR
Calcium	**NS**	**NS**	NR	6140	NR	8350	NR
Chromium, Total	**NS**	**NS**	NR	18.9	NR	19.1	NR
Cobalt	**NS**	**NS**	NR	6.4 J	NR	6.5 J	NR
Copper	**50**	**270**	NR	**88**	NR	**57.4**	NR
Iron	**NS**	**NS**	NR	19800	NR	19600	NR
Lead	**63**	**400**	NR	**270**	NR	**178**	NR
Magnesium	**NS**	**NS**	NR	2030	NR	2480	NR
Manganese	**1600**	**2000**	NR	303	NR	355	NR
Mercury	**0.18**	**0.81**	**1.5**	NR	**0.45**	NR	**1.1**
Nickel	**30**	**310**	NR	15.4	NR	15.5	NR
Potassium	**NS**	**NS**	NR	851 J	NR	1110	NR
Selenium	**3.9**	**180**	NR	3.8 U	NR	3.9 U	NR
Silver	**2**	**180**	NR	0.6 J	NR	0.43 J	NR
Sodium	**NS**	**NS**	NR	111 J	NR	160 J	NR
Thallium	**NS**	**NS**	NR	3.8 U	NR	3.9 U	NR
Vanadium	**NS**	**NS**	NR	24.9	NR	25.1	NR
Zinc	**109**	**10000**	NR	**164**	NR	**140**	NR

Attached Table 7
New 470 Project
12 Eckford Street
Brooklyn, New York
Site-Wide Endpoint Samples
Metals

AKRF Sample ID Sample Elevation Laboratory Sample ID Date Sampled Unit Dilution Factor	NYSDEC UUSCO	NYSDEC RRSCO	EP-11_20190403 13.05 460-178736-7 4/3/2019 9:15:00 AM mg/kg 4	EP-12_20190403 13.37 460-178736-8 4/3/2019 9:45:00 AM mg/kg 4	EP-12_20190403 13.37 460-178736-8 4/3/2019 9:45:00 AM mg/kg 6	EP-13_20190403 12.35 460-178736-9 4/3/2019 10:00:00 AM mg/kg 4	EP-13_20190403 12.35 460-178736-9 4/3/2019 10:00:00 AM mg/kg 6
Aluminum	**NS**	**NS**	8380	7050	NR	7150	NR
Antimony	**NS**	**NS**	4.3 U	3.7 U	NR	2.6 J	NR
Arsenic	**13**	**16**	6.4	12.9	NR	**43.5**	NR
Barium	**350**	**400**	109	147	NR	283	NR
Beryllium	**7.2**	**72**	0.46	0.47	NR	0.48	NR
Cadmium	**2.5**	**4.3**	0.85 U	0.55 J	NR	0.38 J	NR
Calcium	**NS**	**NS**	16200	15900	NR	6620	NR
Chromium, Total	**NS**	**NS**	20.5	21.3	NR	39.2	NR
Cobalt	**NS**	**NS**	7.4 J	6.7 J	NR	11.6	NR
Copper	**50**	**270**	**226**	**265**	NR	**358**	NR
Iron	**NS**	**NS**	24600	19800	NR	41300	NR
Lead	**63**	**400**	**237**	**556**	NR	**849**	NR
Magnesium	**NS**	**NS**	2770	2070	NR	2240	NR
Manganese	**1600**	**2000**	376	356	NR	348	NR
Mercury	**0.18**	**0.81**	NR	NR	**3.7**	NR	**3.8**
Nickel	**30**	**310**	17.7	15.4	NR	**30.1**	NR
Potassium	**NS**	**NS**	995 J	1020	NR	1040	NR
Selenium	**3.9**	**180**	4.3 U	3.7 U	NR	3.7 U	NR
Silver	**2**	**180**	0.64 J	0.63 J	NR	1.3 J	NR
Sodium	**NS**	**NS**	131 J	208 J	NR	245 J	NR
Thallium	**NS**	**NS**	4.3 U	3.7 U	NR	3.7 U	NR
Vanadium	**NS**	**NS**	23.3	25.8	NR	25	NR
Zinc	**109**	**10000**	**231**	**457**	NR	**580**	NR

Attached Table 7
New 470 Project
12 Eckford Street
Brooklyn, New York
Site-Wide Endpoint Samples
Metals

AKRF Sample ID Sample Elevation Laboratory Sample ID Date Sampled Unit Dilution Factor	NYSDEC UUSCO	NYSDEC RRSCO	EP-14_20190403 12.82 460-178736-10 4/3/2019 10:10:00 AM mg/kg 4	EP-14_20190403 12.82 460-178736-10 4/3/2019 10:10:00 AM mg/kg 6	EP-15_20190403 13.46 460-178736-11 4/3/2019 10:30:00 AM mg/kg 4	EP-15_20190403 13.46 460-178736-11 4/3/2019 10:30:00 AM mg/kg 15	EP-16_20190403 13.36 460-178736-12 4/3/2019 1:00:00 PM mg/kg 1
Aluminum	**NS**	**NS**	4680	NR	6080	NR	NR
Antimony	**NS**	**NS**	1.3 J	NR	1.2 J	NR	NR
Arsenic	**13**	**16**	10.6	NR	**15.7**	NR	NR
Barium	**350**	**400**	124	NR	163	NR	NR
Beryllium	**7.2**	**72**	0.32 J	NR	0.42 J	NR	NR
Cadmium	**2.5**	**4.3**	0.28 J	NR	0.7 J	NR	NR
Calcium	**NS**	**NS**	6530	NR	9610	NR	NR
Chromium, Total	**NS**	**NS**	15.8	NR	22.2	NR	NR
Cobalt	**NS**	**NS**	4.9 J	NR	6.5 J	NR	NR
Copper	**50**	**270**	**222**	NR	**288**	NR	NR
Iron	**NS**	**NS**	18200	NR	19600	NR	NR
Lead	**63**	**400**	**354**	NR	**468**	NR	NR
Magnesium	**NS**	**NS**	1330	NR	1890	NR	NR
Manganese	**1600**	**2000**	216	NR	285	NR	NR
Mercury	**0.18**	**0.81**	NR	**4**	NR	**8.9**	**0.64**
Nickel	**30**	**310**	13	NR	17.2	NR	NR
Potassium	**NS**	**NS**	715 J	NR	915 J	NR	NR
Selenium	**3.9**	**180**	4 U	NR	4.3 U	NR	NR
Silver	**2**	**180**	0.45 J	NR	0.48 J	NR	NR
Sodium	**NS**	**NS**	157 J	NR	182 J	NR	NR
Thallium	**NS**	**NS**	4 U	NR	4.3 U	NR	NR
Vanadium	**NS**	**NS**	18.2	NR	21.9	NR	NR
Zinc	**109**	**10000**	**399**	NR	**908**	NR	NR

Attached Table 7
New 470 Project
12 Eckford Street
Brooklyn, New York
Site-Wide Endpoint Samples
Metals

AKRF Sample ID Sample Elevation Laboratory Sample ID Date Sampled Unit Dilution Factor	NYSDEC UUSCO	NYSDEC RRSCO	EP-16_20190403 13.36 460-178736-12 4/3/2019 1:00:00 PM mg/kg 4	EP-17_20190403 12.37 460-178736-13 4/3/2019 1:15:00 PM mg/kg 4	EP-17_20190403 12.37 460-178736-13 4/3/2019 1:15:00 PM mg/kg 15	EP-18_20190403 14.20 460-178736-14 4/3/2019 1:45:00 PM mg/kg 4	EP-18_20190403 14.20 460-178736-14 4/3/2019 1:45:00 PM mg/kg 5
Aluminum	**NS**	**NS**	5110	5850	NR	6390	NR
Antimony	**NS**	**NS**	3.2 U	1 J	NR	3.3 U	NR
Arsenic	**13**	**16**	4.5	**13.4**	NR	10.7	NR
Barium	**350**	**400**	62.2	240	NR	108	NR
Beryllium	**7.2**	**72**	0.34	0.42	NR	0.42	NR
Cadmium	**2.5**	**4.3**	0.65 U	0.69 U	NR	0.67 U	NR
Calcium	**NS**	**NS**	1910	6400	NR	7550	NR
Chromium, Total	**NS**	**NS**	14.3	19.2	NR	18.6	NR
Cobalt	**NS**	**NS**	4.8 J	7.1 J	NR	5.7 J	NR
Copper	**50**	**270**	43.8	**269**	NR	**155**	NR
Iron	**NS**	**NS**	18500	27400	NR	22000	NR
Lead	**63**	**400**	**103**	**429**	NR	**528**	NR
Magnesium	**NS**	**NS**	1590	2070	NR	2920	NR
Manganese	**1600**	**2000**	358	338	NR	309	NR
Mercury	**0.18**	**0.81**	NR	NR	**6.5**	NR	**2.5**
Nickel	**30**	**310**	11.9	16.8	NR	13.5	NR
Potassium	**NS**	**NS**	615 J	968	NR	946	NR
Selenium	**3.9**	**180**	3.2 U	3.4 U	NR	3.3 U	NR
Silver	**2**	**180**	0.4 J	0.63 J	NR	0.43 J	NR
Sodium	**NS**	**NS**	86.7 J	257 J	NR	169 J	NR
Thallium	**NS**	**NS**	3.2 U	3.4 U	NR	3.3 U	NR
Vanadium	**NS**	**NS**	18.6	20.2	NR	24.3	NR
Zinc	**109**	**10000**	80.1	**529**	NR	**328**	NR

Attached Table 7
New 470 Project
12 Eckford Street
Brooklyn, New York
Site-Wide Endpoint Samples
Metals

AKRF Sample ID Sample Elevation Laboratory Sample ID Date Sampled Unit Dilution Factor	NYSDEC UUSCO	NYSDEC RRSCO	EP-19_20190403 13.94 460-178736-15 4/3/2019 2:00:00 PM mg/kg 3	EP-19_20190403 13.94 460-178736-15 4/3/2019 2:00:00 PM mg/kg 4	EP-20_20190403 13.51 460-178736-16 4/3/2019 2:15:00 PM mg/kg 3	EP-20_20190403 13.51 460-178736-16 4/3/2019 2:15:00 PM mg/kg 4	EP-21_20190429 11.98 460-180693-1 4/29/2019 10:05:00 AM mg/kg 3
Aluminum	**NS**	**NS**	NR	8920	NR	6130	NR
Antimony	**NS**	**NS**	NR	4.2 U	NR	1.4 J	NR
Arsenic	**13**	**16**	NR	12.8	NR	**21.8**	NR
Barium	**350**	**400**	NR	185	NR	158	NR
Beryllium	**7.2**	**72**	NR	0.6	NR	0.63	NR
Cadmium	**2.5**	**4.3**	NR	0.85 U	NR	0.18 J	NR
Calcium	**NS**	**NS**	NR	12700	NR	8930	NR
Chromium, Total	**NS**	**NS**	NR	27.3	NR	20.2	NR
Cobalt	**NS**	**NS**	NR	6.7 J	NR	6.6 J	NR
Copper	**50**	**270**	NR	**194**	NR	**284**	NR
Iron	**NS**	**NS**	NR	23700	NR	26800	NR
Lead	**63**	**400**	NR	**379**	NR	**593**	NR
Magnesium	**NS**	**NS**	NR	2670	NR	2130	NR
Manganese	**1600**	**2000**	NR	358	NR	310	NR
Mercury	**0.18**	**0.81**	**2.3**	NR	**1.3**	NR	**1.7**
Nickel	**30**	**310**	NR	18.4	NR	21.6	NR
Potassium	**NS**	**NS**	NR	855 J	NR	849 J	NR
Selenium	**3.9**	**180**	NR	4.2 U	NR	4.6 U	NR
Silver	**2**	**180**	NR	0.4 J	NR	0.43 J	NR
Sodium	**NS**	**NS**	NR	175 J	NR	278 J	NR
Thallium	**NS**	**NS**	NR	4.2 U	NR	4.6 U	NR
Vanadium	**NS**	**NS**	NR	25.1	NR	27.5	NR
Zinc	**109**	**10000**	NR	**467**	NR	**407**	NR

Attached Table 7
New 470 Project
12 Eckford Street
Brooklyn, New York
Site-Wide Endpoint Samples
Metals

AKRF Sample ID Sample Elevation Laboratory Sample ID Date Sampled Unit Dilution Factor	NYSDEC UUSCO	NYSDEC RRSCO	EP-21_20190429 11.98 460-180693-1 4/29/2019 10:05:00 AM mg/kg 4	EP-X03_20190429 12.70 460-180693-3 4/29/2019 10:10:00 AM mg/kg 3	EP-X03_20190429 12.70 460-180693-3 4/29/2019 10:10:00 AM mg/kg 4	EP-22_20190429 12.70 460-180693-2 4/29/2019 10:15:00 AM mg/kg 3	EP-22_20190429 12.70 460-180693-2 4/29/2019 10:15:00 AM mg/kg 4
Aluminum	**NS**	**NS**	7840	NR	7220	NR	7580
Antimony	**NS**	**NS**	1.4 JL	NR	4.5 U	NR	4.6 U
Arsenic	**13**	**16**	**14**	NR	8.5	NR	10.1
Barium	**350**	**400**	138	NR	107	NR	108
Beryllium	**7.2**	**72**	0.5	NR	0.44 J	NR	0.43 J
Cadmium	**2.5**	**4.3**	0.22 J	NR	0.89 U	NR	0.93 U
Calcium	**NS**	**NS**	5680	NR	8850	NR	4810 JL
Chromium, Total	**NS**	**NS**	20.8	NR	20.6	NR	17.7
Cobalt	**NS**	**NS**	6.8 J	NR	6.3 J	NR	6.1 J
Copper	**50**	**270**	**149**	NR	**88.4**	NR	**88.9**
Iron	**NS**	**NS**	22300	NR	24300	NR	18900
Lead	**63**	**400**	**342**	NR	**243**	NR	**281**
Magnesium	**NS**	**NS**	2040	NR	2320	NR	2020
Manganese	**1600**	**2000**	327	NR	402	NR	277 JL
Mercury	**0.18**	**0.81**	NR	**1.9**	NR	**1.5**	NR
Nickel	**30**	**310**	15.7 J	NR	14.5	NR	13.2
Potassium	**NS**	**NS**	943 J	NR	859 J	NR	866 J
Selenium	**3.9**	**180**	4.6 U	NR	4.5 U	NR	4.6 U
Silver	**2**	**180**	0.26 J	NR	2.2 U	NR	2.3 U
Sodium	**NS**	**NS**	178 J	NR	165 J	NR	142 J
Thallium	**NS**	**NS**	4.6 U	NR	4.5 U	NR	4.6 U
Vanadium	**NS**	**NS**	24.4	NR	24	NR	21.2
Zinc	**109**	**10000**	**359 J**	NR	**169**	NR	**176**

Attached Table 7
New 470 Project
12 Eckford Street
Brooklyn, New York
Site-Wide Endpoint Samples
Metals

AKRF Sample ID Sample Elevation Laboratory Sample ID Date Sampled Unit Dilution Factor	NYSDEC UUSCO	NYSDEC RRSCO	EP-23_20190701 16.45 460-185721-1 7/1/2019 12:35:00 PM mg/kg 1	EP-23_20190701 16.45 460-185721-1 7/1/2019 12:35:00 PM mg/kg 4	EP-24_20190701 15.93 460-185721-2 7/1/2019 12:45:00 PM mg/kg 4	EP-24_20190701 15.93 460-185721-2 7/1/2019 12:45:00 PM mg/kg 5	EP-X04_20190701 15.93 460-185721-3 7/1/2019 12:55:00 PM mg/kg 2
Aluminum	**NS**	**NS**	NR	7620	8440	NR	NR
Antimony	**NS**	**NS**	NR	4.5 U	4.4 UJ	NR	NR
Arsenic	**13**	**16**	NR	7.7	6.4	NR	NR
Barium	**350**	**400**	NR	74.3	93.2	NR	NR
Beryllium	**7.2**	**72**	NR	0.4 J	0.52	NR	NR
Cadmium	**2.5**	**4.3**	NR	0.9 U	0.88 U	NR	NR
Calcium	**NS**	**NS**	NR	45400	53100	NR	NR
Chromium, Total	**NS**	**NS**	NR	32.3	30.9	NR	NR
Cobalt	**NS**	**NS**	NR	5.4 J	5.5 J	NR	NR
Copper	**50**	**270**	NR	38.9	48.1 JK	NR	NR
Iron	**NS**	**NS**	NR	12300	15300	NR	NR
Lead	**63**	**400**	NR	**88.8**	**113**	NR	NR
Magnesium	**NS**	**NS**	NR	6720	6800 JL	NR	NR
Manganese	**1600**	**2000**	NR	240	305	NR	NR
Mercury	**0.18**	**0.81**	**0.68**	NR	NR	**1.6**	**0.87**
Nickel	**30**	**310**	NR	20.2	20.2	NR	NR
Potassium	**NS**	**NS**	NR	1110 J	1140	NR	NR
Selenium	**3.9**	**180**	NR	4.5 U	4.4 U	NR	NR
Silver	**2**	**180**	NR	2.3 U	2.2 U	NR	NR
Sodium	**NS**	**NS**	NR	255 J	186 J	NR	NR
Thallium	**NS**	**NS**	NR	4.5 U	4.4 U	NR	NR
Vanadium	**NS**	**NS**	NR	28.6	34.3	NR	NR
Zinc	**109**	**10000**	NR	94.5	**146 JL**	NR	NR

Attached Table 7
New 470 Project
12 Eckford Street
Brooklyn, New York
Site-Wide Endpoint Samples
Metals

AKRF Sample ID			EP-X04_20190701	EP-FB-01_20190225	EP-FB-01_20190225	EP-FB-02_20190403	EP-FB-02_20190403
Sample Elevation			15.93	N/A	N/A	N/A	N/A
Laboratory Sample ID	NYSDEC	NYSDEC	460-185721-3	460-176028-9	460-176028-9	460-178736-2	460-178736-2
Date Sampled	UUSCO	RRSCO	7/1/2019 12:55:00 PM	2/25/2019 9:50:00 AM	2/25/2019 9:50:00 AM	4/3/2019 12:00:00 PM	4/3/2019 12:00:00 PM
Unit			mg/kg	ug/L	ug/L	ug/L	ug/L
Dilution Factor			4	1	2	1	2
Aluminum	**NS**	**NS**	7460	NR	40 U	NR	40 U
Antimony	**NS**	**NS**	4.3 UJ	NR	2 U	NR	2 U
Arsenic	**13**	**16**	5.6	NR	2 U	NR	2 U
Barium	**350**	**400**	79.7	NR	4 U	NR	4 U
Beryllium	**7.2**	**72**	0.52	NR	0.8 U	NR	0.8 U
Cadmium	**2.5**	**4.3**	0.86 U	NR	2 U	NR	2 U
Calcium	**NS**	**NS**	51200	NR	200 U	NR	200 U
Chromium, Total	**NS**	**NS**	26.2	NR	4 U	NR	4 U
Cobalt	**NS**	**NS**	4.8 J	NR	4 U	NR	4 U
Copper	**50**	**270**	36.2 JK	NR	4 U	NR	4 U
Iron	**NS**	**NS**	12400	NR	120 U	NR	120 U
Lead	**63**	**400**	**77.6 JL**	NR	1.2 U	NR	1.2 U
Magnesium	**NS**	**NS**	6660	NR	200 U	NR	200 U
Manganese	**1600**	**2000**	265	NR	8 U	NR	8 U
Mercury	**0.18**	**0.81**	NR	0.2 U	NR	0.2 U	NR
Nickel	**30**	**310**	19	NR	4 U	NR	4 U
Potassium	**NS**	**NS**	993 J	NR	200 U	NR	200 U
Selenium	**3.9**	**180**	4.3 U	NR	10 U	NR	10 U
Silver	**2**	**180**	2.2 U	NR	2 U	NR	2 U
Sodium	**NS**	**NS**	163 J	NR	200 U	NR	200 U
Thallium	**NS**	**NS**	4.3 U	NR	0.8 U	NR	0.8 U
Vanadium	**NS**	**NS**	34.4	NR	4 U	NR	4 U
Zinc	**109**	**10000**	108 JL	NR	16 U	NR	16 U

Attached Table 7
New 470 Project
12 Eckford Street
Brooklyn, New York
Site-Wide Endpoint Samples
Metals

AKRF Sample ID Sample Elevation Laboratory Sample ID Date Sampled Unit Dilution Factor	NYSDEC UUSCO	NYSDEC RRSCO	EP-FB-03_20190429 N/A 460-180693-4 4/29/2019 11:40:00 AM ug/L 1	EP-FB-03_20190429 N/A 460-180693-4 4/29/2019 11:40:00 AM ug/L 2	EP-FB-04_20190701 N/A 460-185721-4 7/1/2019 1:05:00 PM ug/L 1	EP-FB-04_20190701 N/A 460-185721-4 7/1/2019 1:05:00 PM ug/L 2
Aluminum	**NS**	**NS**	NR	40 U	NR	40 U
Antimony	**NS**	**NS**	NR	2 U	NR	2 U
Arsenic	**13**	**16**	NR	2 U	NR	2 U
Barium	**350**	**400**	NR	4 U	NR	4 U
Beryllium	**7.2**	**72**	NR	0.8 U	NR	0.8 U
Cadmium	**2.5**	**4.3**	NR	2 U	NR	2 U
Calcium	**NS**	**NS**	NR	200 U	NR	200 U
Chromium, Total	**NS**	**NS**	NR	4 U	NR	4 U
Cobalt	**NS**	**NS**	NR	4 U	NR	4 U
Copper	**50**	**270**	NR	4 U	NR	4 U
Iron	**NS**	**NS**	NR	120 U	NR	120 U
Lead	**63**	**400**	NR	1.2 U	NR	1.2 U
Magnesium	**NS**	**NS**	NR	200 U	NR	200 U
Manganese	**1600**	**2000**	NR	8 U	NR	8 U
Mercury	**0.18**	**0.81**	0.2 U	NR	0.2 U	NR
Nickel	**30**	**310**	NR	4 U	NR	4 U
Potassium	**NS**	**NS**	NR	200 U	NR	200 U
Selenium	**3.9**	**180**	NR	10 U	NR	10 U
Silver	**2**	**180**	NR	2 U	NR	2 U
Sodium	**NS**	**NS**	NR	200 U	NR	200 U
Thallium	**NS**	**NS**	NR	0.8 U	NR	0.8 U
Vanadium	**NS**	**NS**	NR	4 U	NR	4 U
Zinc	**109**	**10000**	NR	16 U	NR	16 U

Attached Tables 3 through 7
New 470 Project
12 Eckford Street
Brooklyn, New York
Site-Wide Endpoint Samples
Notes

Qualifier	Description
J	The reported concentration is a value above the method detection limit, but is estimated and may be imprecise.
L	The reported concentration is a value above the method detection limit, but is reported low.
K	The reported concentration is proportional to dilution factor and may be exaggerated.
R	The reported concentration is unusable; the analyte may or may not be present in the sample.
U	The concentration was not detected above the method detection limit; the compound is not present in the sample.

Blind Duplicate Samples
EP-X01_20190225 is a blind duplicate of sample EP-02_20190225.
EP-X02_20190403 is a blind duplicate of sample EP-08_20190403.
EP-X03_20190429 is a blind duplicate of sample EP-22_20190429.
EP-X04_20190701 is a blind duplicate of sample EP-24_20190701.

Part 375 Soil Cleanup Objectives (SCOs): SCOs listed in the New York State Department of Environmental Conservation (NYSDEC) "Part 375" Regulations (6 NYCRR Part 375).

Exceedances of NYSDEC Unrestricted Use Soil Cleanup Objectives (UUSCOs) are presented in bold font.
Exceedances of NYSDEC Restricted Residential Soil Cleanup Objectives (RRSCOs) are presented in gray shading.
Elevations are presented in North American Vertical Datum (NAVD) 88.
mg/kg - milligrams per kilogram = parts per million (ppm)
ug/L - micrograms per Liter = parts per billion (ppb)

FIGURES

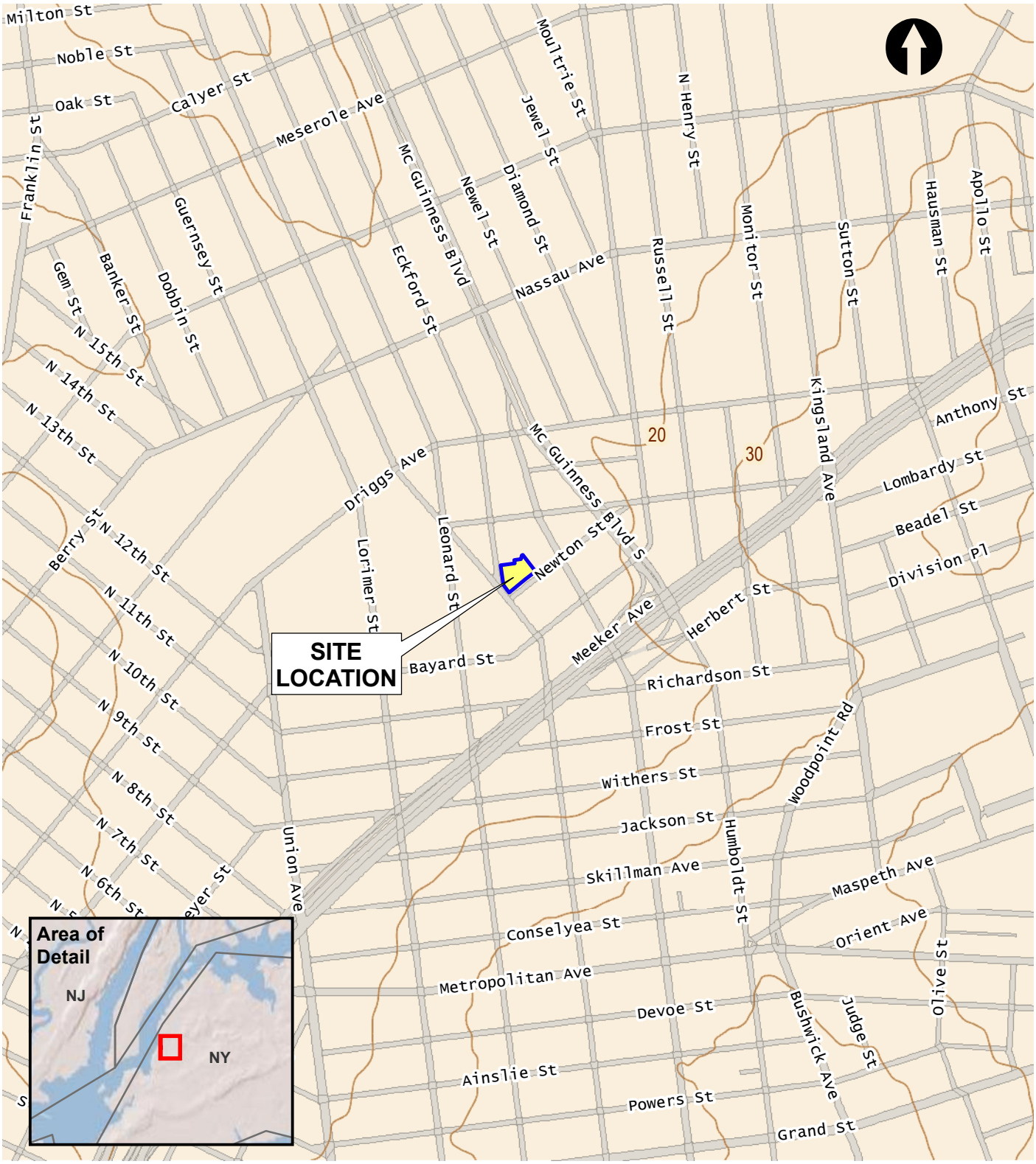

Service Layer Credits: USGS The National Map: 3d Elevation Program 2018

0 800 1,600

SCALE IN FEET

AKRF

440 Park Avenue South, New York, NY 10016

New 470 Project
12 Eckford Street
Brooklyn, New York

SITE LOCATION

DATE	7/10/2019
PROJECT NO.	12306
FIGURE	1

©2019 AKRF W:\Projects\12306 - 12 ECKFORD STREET\Technical\GIS and Graphics\Hazmat\12306 Fig 1 site loc map.mxd7/10/2019 10:48:41 AM mvelleux

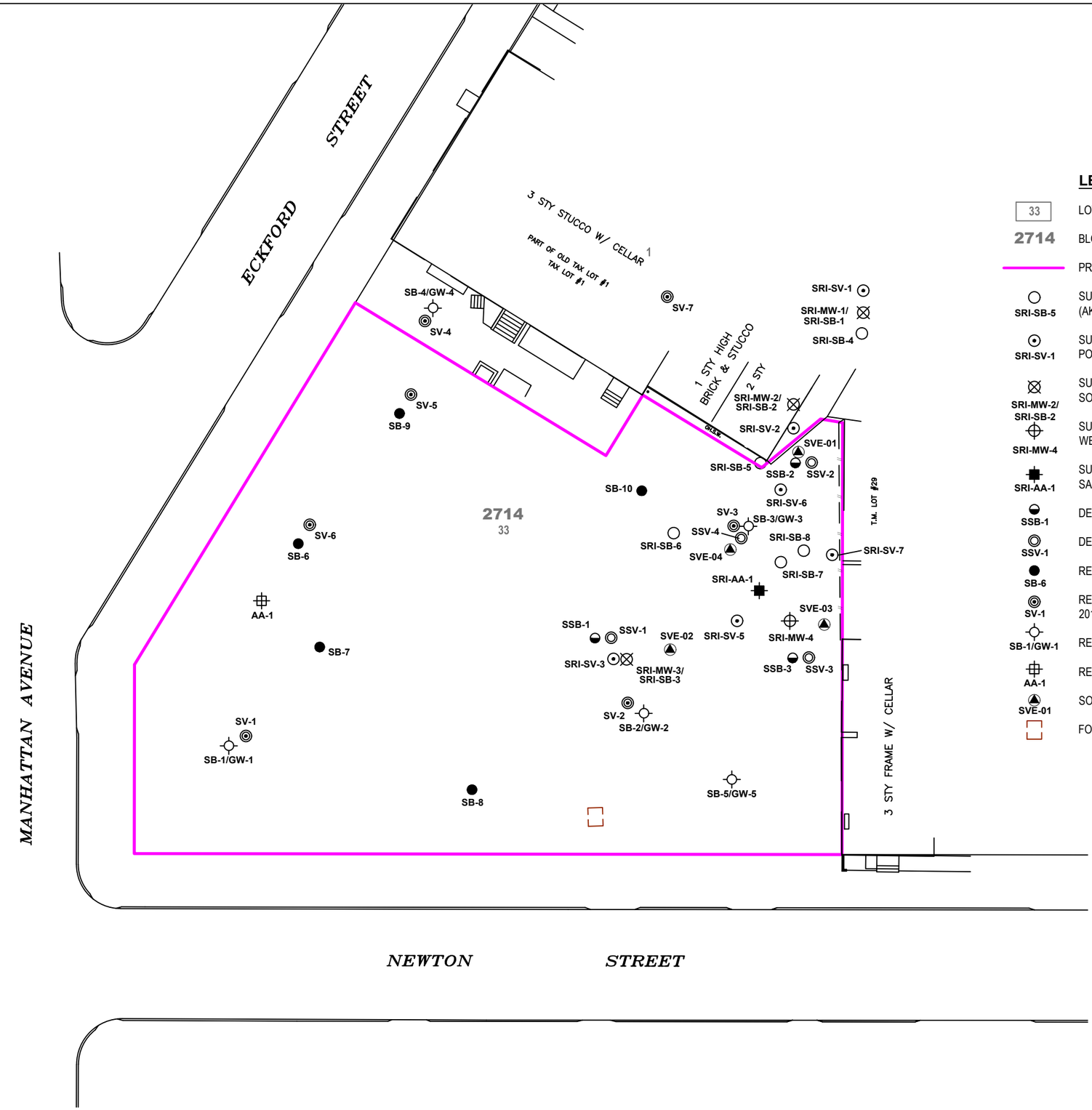

LEGEND

33	LOT BOUNDARY AND NUMBER
2714	BLOCK NUMBER
	PROJECT SITE BOUNDARY
SRI-SB-5	SUPPLEMENTAL REMEDIAL INVESTIGATION SOIL BORING LOCATION (AKRF, 2016)
SRI-SV-1	SUPPLEMENTAL REMEDIAL INVESTIGATION TEMPORARY SOIL VAPOR POINT LOCATION (AKRF, 2016)
SRI-MW-2/ SRI-SB-2	SUPPLEMENTAL REMEDIAL INVESTIGATION GROUNDWATER WELL/ SOIL BORING LOCATION (AKRF, 2016)
SRI-MW-4	SUPPLEMENTAL REMEDIAL INVESTIGATION GROUNDWATER WELL LOCATION (AKRF, 2016)
SRI-AA-1	SUPPLEMENTAL REMEDIAL INVESTIGATION AMBIENT AIR SAMPLE LOCATION (AKRF, 2016)
SSB-1	DELINEATION SAMPLING SOIL BORING LOCATION (AKRF, 2016)
SSV-1	DELINEATION SAMPLING TEMPORARY SOIL VAPOR POINT LOCATION (AKRF, 2016)
SB-6	REMEDIAL INVESTIGATION SOIL BORING LOCATION (AKRF, 2015)
SV-1	REMEDIAL INVESTIGATION TEMPORARY SOIL VAPOR POINT LOCATION (AKRF, 2015)
SB-1/GW-1	REMEDIAL INVESTIGATION SOIL BORING/GROUNDWATER LOCATION (AKRF, 2015)
AA-1	REMEDIAL INVESTIGATION AMBIENT AIR SAMPLE LOCATION (AKRF, 2015)
SVE-01	SOIL VAPOR EXTRACTION PILOT TEST WELL LOCATION
	FORMER 550-GALLON UNDERGROUND STORAGE TANK LOCATION

0 15 30 60
SCALE IN FEET

Map Source:
Geoland Land Surveying P.C. "Block 2714 New Lot 33", updated 04-29-2019.

AKRF
440 Park Avenue South, New York, NY 10016

New 470 Project
12 Eckford Street
Brooklyn, New York

SITE AND INVESTIGATION SAMPLE LOCATION PLAN

DATE
8/1/2019

PROJECT NO.
12306

FIGURE
2

©2019 AKRF, Inc W:\Projects\12306 - 12 ECKFORD STREET\Technical\Hazmat\Drawings\FER\12306 Fig 2 Site and Sample Location Plan.dwg last save: mveilleux 8/1/2019 7:56 AM

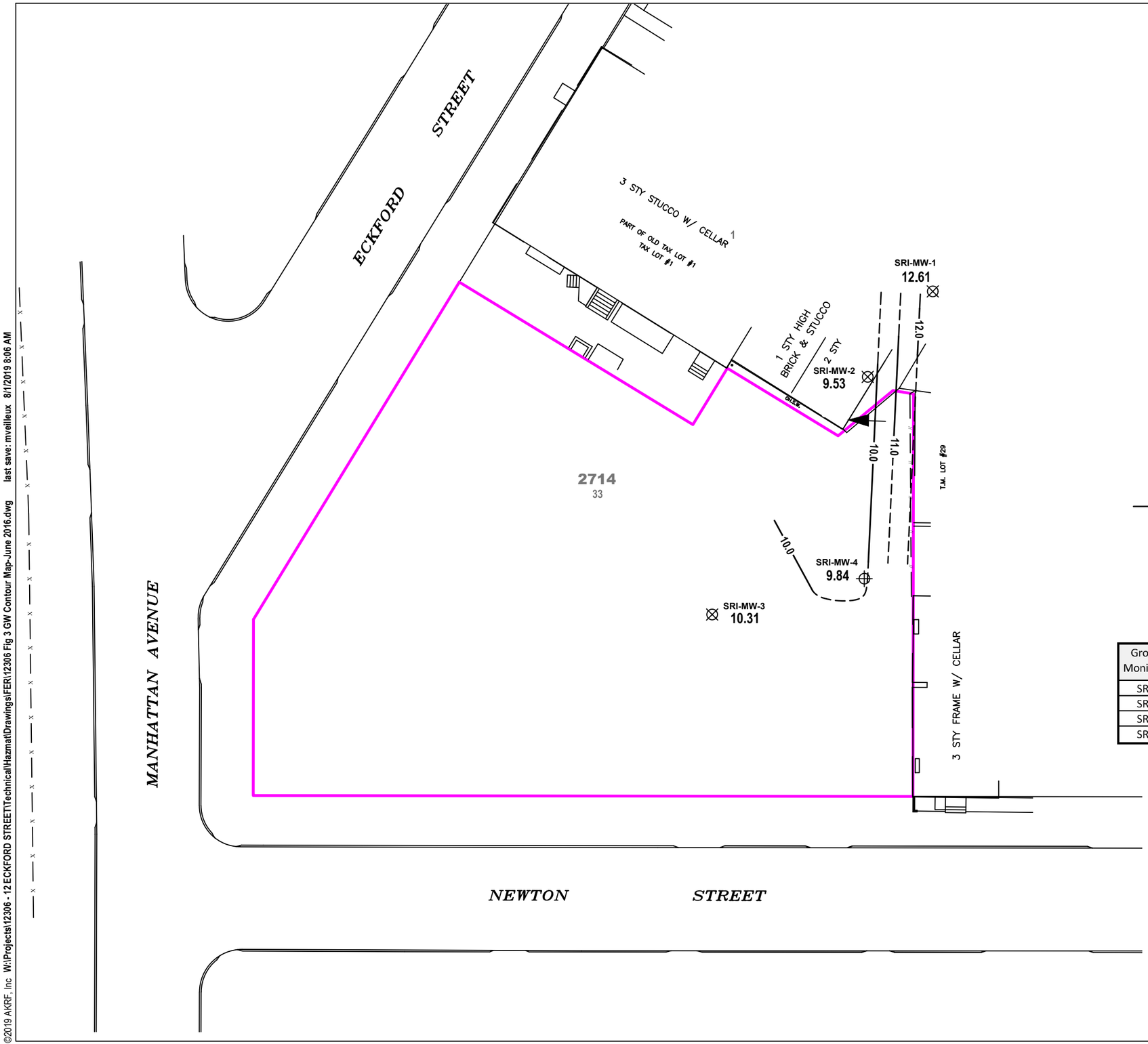

LEGEND

33	LOT BOUNDARY AND NUMBER
2714	BLOCK NUMBER
	PROJECT SITE BOUNDARY
SRI-MW-2	SUPPLEMENTAL REMEDIAL INVESTIGATION GROUNDWATER WELL LOCATION (AKRF, 2016)
SRI-MW-4	SUPPLEMENTAL REMEDIAL INVESTIGATION GROUNDWATER WELL LOCATION (AKRF, 2016)
12.61	WATER TABLE ELEVATION IN FEET
10.0	GROUNDWATER ELEVATION CONTOUR IN FEET (DASHED WHERE INFERRED)
	GROUNDWATER FLOW DIRECTION

Groundwater Monitoring Well	Top of Casing Elevation (ft.)	Groundwater (ft. below Top of Casing)	Groundwater Elevation (ft.)
SRI-MW-1	22.34	9.73	12.61
SRI-MW-2	22.21	12.68	9.53
SRI-MW-3	20.52	10.21	10.31
SRI-MW-4	19.00	9.16	9.84

0 15 30 60
SCALE IN FEET

Map Source:
Geoland Land Surveying P.C. "Block 2714 New Lot 33", updated 04-29-2019.

AKRF
440 Park Avenue South, New York, NY 10016

New 470 Project
12 Eckford Street
Brooklyn, New York

INFERRED GROUNDWATER ELEVATION CONTOUR MAP
JUNE 6, 2016

DATE
8/1/2019

PROJECT NO.
12306

FIGURE
3

©2019 AKRF, Inc W:\Projects\12306 - 12 ECKFORD STREET\Technical\Hazmat\Drawings\FER\12306 Fig 3 GW Contour Map-June 2016.dwg last save: mveilleux 8/1/2019 8:06 AM

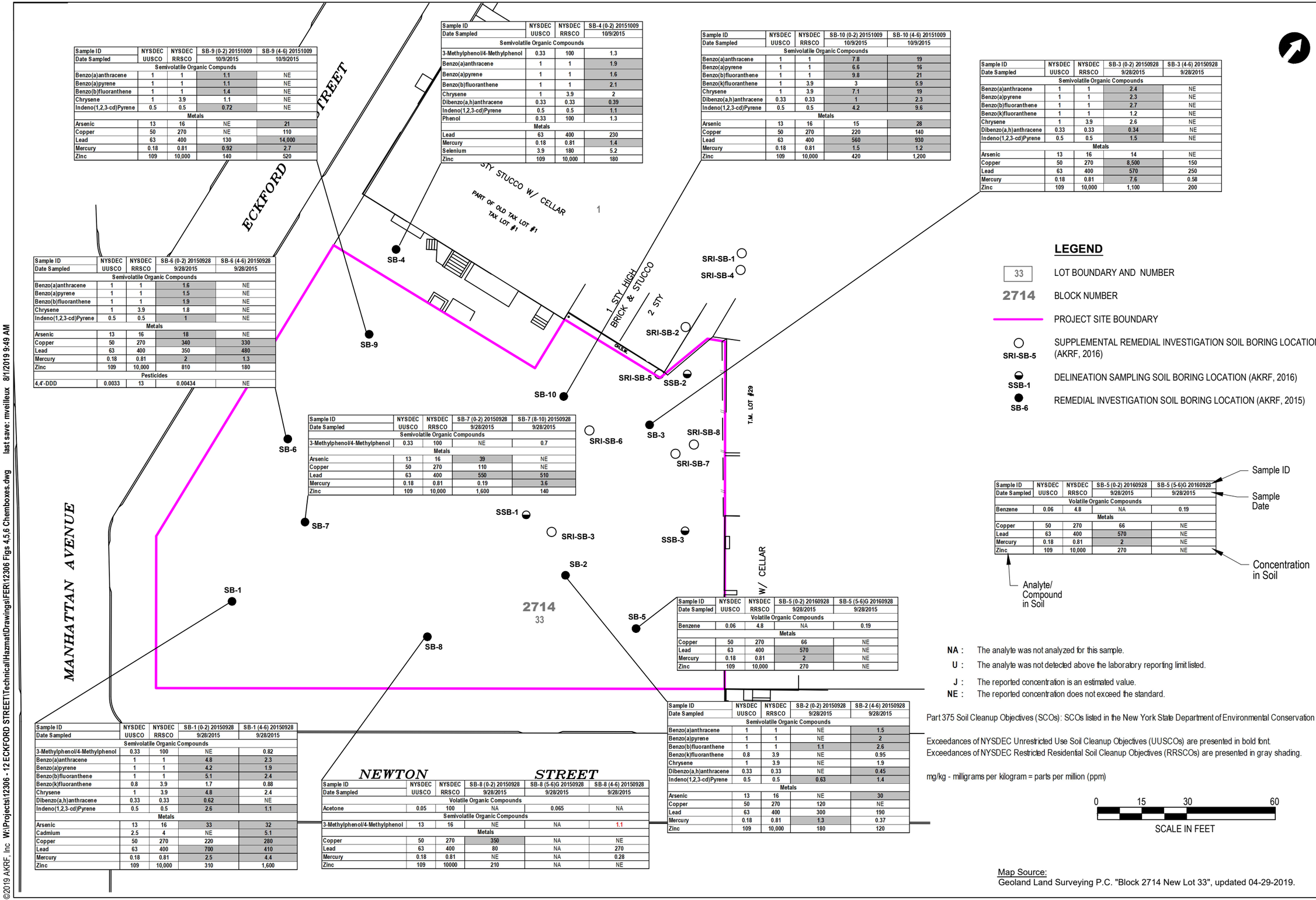

Sample ID	NYSDEC	NYSDEC	SB-9 (0-2) 20151009	SB-9 (4-6) 20151009
Date Sampled	UUSCO	RRSCO	10/9/2015	10/9/2015
Semivolatile Organic Compunds				
Benzo(a)anthracene	1	1	1.1	NE
Benzo(a)pyrene	1	1	1.1	NE
Benzo(b)fluoranthene	1	1	1.4	NE
Chrysene	1	3.9	1.1	NE
Indeno(1,2,3-cd)Pyrene	0.5	0.5	0.72	NE
Metals				
Arsenic	13	16	NE	21
Copper	50	270	NE	110
Lead	63	400	130	14,000
Mercury	0.18	0.81	0.92	2.7
Zinc	109	10,000	140	520

Sample ID	NYSDEC	NYSDEC	SB-4 (0-2) 20151009
Date Sampled	UUSCO	RRSCO	10/9/2015
Semivolatile Organic Compounds			
3-Methylphenol/4-Methylphenol	0.33	100	1.3
Benzo(a)anthracene	1	1	1.9
Benzo(a)pyrene	1	1	1.6
Benzo(b)fluoranthene	1	1	2.1
Chrysene	1	3.9	2
Dibenzo(a,h)anthracene	0.33	0.33	0.39
Indeno(1,2,3-cd)Pyrene	0.5	0.5	1.1
Phenol	0.33	100	1.3
Metals			
Lead	63	400	230
Mercury	0.18	0.81	1.4
Selenium	3.9	180	5.2
Zinc	109	10,000	180

Sample ID	NYSDEC	NYSDEC	SB-10 (0-2) 20151009	SB-10 (4-6) 20151009
Date Sampled	UUSCO	RRSCO	10/9/2015	10/9/2015
Semivolatile Organic Compounds				
Benzo(a)anthracene	1	1	7.8	19
Benzo(a)pyrene	1	1	6.6	16
Benzo(b)fluoranthene	1	1	9.8	21
Benzo(k)fluoranthene	1	3.9	3	5.9
Chrysene	1	3.9	7.1	19
Dibenzo(a,h)anthracene	0.33	0.33	1	2.3
Indeno(1,2,3-cd)Pyrene	0.5	0.5	4.2	9.6
Metals				
Arsenic	13	16	15	28
Copper	50	270	220	140
Lead	63	400	560	930
Mercury	0.18	0.81	1.5	1.2
Zinc	109	10,000	420	1,200

Sample ID	NYSDEC	NYSDEC	SB-3 (0-2) 20150928	SB-3 (4-6) 20150928
Date Sampled	UUSCO	RRSCO	9/28/2015	9/28/2015
Semivolatile Organic Compounds				
Benzo(a)anthracene	1	1	2.4	NE
Benzo(a)pyrene	1	1	2.3	NE
Benzo(b)fluoranthene	1	1	2.7	NE
Benzo(k)fluoranthene	1	1	1.2	NE
Chrysene	1	3.9	2.6	NE
Dibenzo(a,h)anthracene	0.33	0.33	0.34	NE
Indeno(1,2,3-cd)Pyrene	0.5	0.5	1.5	NE
Metals				
Arsenic	13	16	14	NE
Copper	50	270	8,500	150
Lead	63	400	570	250
Mercury	0.18	0.81	7.6	0.58
Zinc	109	10,000	1,100	200

Sample ID	NYSDEC	NYSDEC	SB-6 (0-2) 20150928	SB-6 (4-6) 20150928
Date Sampled	UUSCO	RRSCO	9/28/2015	9/28/2015
Semivolatile Organic Compounds				
Benzo(a)anthracene	1	1	1.6	NE
Benzo(a)pyrene	1	1	1.5	NE
Benzo(b)fluoranthene	1	1	1.9	NE
Chrysene	1	3.9	1.8	NE
Indeno(1,2,3-cd)Pyrene	0.5	0.5	1	NE
Metals				
Arsenic	13	16	18	NE
Copper	50	270	340	330
Lead	63	400	350	480
Mercury	0.18	0.81	2	13
Zinc	109	10,000	810	180
Pesticides				
4,4'-DDD	0.0033	13	0.00434	NE

Sample ID	NYSDEC	NYSDEC	SB-7 (0-2) 20150928	SB-7 (8-10) 20150928
Date Sampled	UUSCO	RRSCO	9/28/2015	9/28/2015
Semivolatile Organic Compounds				
3-Methylphenol/4-Methylphenol	0.33	100	NE	0.7
Metals				
Arsenic	13	16	39	NE
Copper	50	270	110	NE
Lead	63	400	550	510
Mercury	0.18	0.81	0.19	3.6
Zinc	109	10,000	1,600	140

Sample ID	NYSDEC	NYSDEC	SB-5 (0-2) 20160928	SB-5 (5-6)G 20160928
Date Sampled	UUSCO	RRSCO	9/28/2015	9/28/2015
Volatile Organic Compounds				
Benzene	0.06	4.8	NA	0.19
Metals				
Copper	50	270	66	NE
Lead	63	400	570	NE
Mercury	0.18	0.81	2	NE
Zinc	109	10,000	270	NE

Sample ID	NYSDEC	NYSDEC	SB-1 (0-2) 20150928	SB-1 (4-6) 20150928
Date Sampled	UUSCO	RRSCO	9/28/2015	9/28/2015
Semivolatile Organic Compounds				
3-Methylphenol/4-Methylphenol	0.33	100	NE	0.82
Benzo(a)anthracene	1	1	4.8	2.3
Benzo(a)pyrene	1	1	4.2	1.9
Benzo(b)fluoranthene	1	1	5.1	2.4
Benzo(k)fluoranthene	0.8	3.9	1.7	0.88
Chrysene	1	3.9	4.8	2.4
Dibenzo(a,h)anthracene	0.33	0.33	0.62	NE
Indeno(1,2,3-cd)Pyrene	0.5	0.5	2.6	1.1
Metals				
Arsenic	13	16	33	32
Cadmium	2.5	4	NE	5.1
Copper	50	270	220	280
Lead	63	400	700	410
Mercury	0.18	0.81	2.5	4.4
Zinc	109	10,000	310	1,600

Sample ID	NYSDEC	NYSDEC	SB-8 (0-2) 20150928	SB-8 (5-6)G 20150928	SB-8 (4-6) 20150928
Date Sampled	UUSCO	RRSCO	9/28/2015	9/28/2015	9/28/2015
Volatile Organic Compounds					
Acetone	0.05	100	NA	0.065	NA
Semivolatile Organic Compounds					
3-Methylphenol/4-Methylphenol	13	16	NE	NA	1.1
Metals					
Copper	50	270	350	NA	NE
Lead	63	400	80	NA	270
Mercury	0.18	0.81	NE	NA	0.28
Zinc	109	10000	210	NA	NE

Sample ID	NYSDEC	NYSDEC	SB-2 (0-2) 20150928	SB-2 (4-6) 20150928
Date Sampled	UUSCO	RRSCO	9/28/2015	9/28/2015
Semivolatile Organic Compounds				
Benzo(a)anthracene	1	1	NE	1.5
Benzo(a)pyrene	1	1	NE	2
Benzo(b)fluoranthene	1	1	1.1	2.6
Benzo(k)fluoranthene	0.8	3.9	NE	0.95
Chrysene	1	3.9	NE	1.9
Dibenzo(a,h)anthracene	0.33	0.33	NE	0.45
Indeno(1,2,3-cd)Pyrene	0.5	0.5	0.63	1.4
Metals				
Arsenic	13	16	NE	30
Copper	50	270	120	NE
Lead	63	400	300	190
Mercury	0.18	0.81	1.3	0.37
Zinc	109	10,000	180	120

LEGEND

33	LOT BOUNDARY AND NUMBER
2714	BLOCK NUMBER
	PROJECT SITE BOUNDARY
SRI-SB-5	SUPPLEMENTAL REMEDIAL INVESTIGATION SOIL BORING LOCATION (AKRF, 2016)
SSB-1	DELINEATION SAMPLING SOIL BORING LOCATION (AKRF, 2016)
SB-6	REMEDIAL INVESTIGATION SOIL BORING LOCATION (AKRF, 2015)

Sample ID	NYSDEC	NYSDEC	SB-5 (0-2) 20160928	SB-5 (5-6)G 20160928
Date Sampled	UUSCO	RRSCO	9/28/2015	9/28/2015
Volatile Organic Compounds				
Benzene	0.06	4.8	NA	0.19
Metals				
Copper	50	270	66	NE
Lead	63	400	570	NE
Mercury	0.18	0.81	2	NE
Zinc	109	10,000	270	NE

Sample ID
Sample Date
Concentration in Soil
Analyte/ Compound in Soil

NA : The analyte was not analyzed for this sample.

U : The analyte was not detected above the laboratory reporting limit listed.

J : The reported concentration is an estimated value.

NE : The reported concentration does not exceed the standard.

Part 375 Soil Cleanup Objectives (SCOs): SCOs listed in the New York State Department of Environmental Conservation

Exceedances of NYSDEC Unrestricted Use Soil Cleanup Objectives (UUSCOs) are presented in bold font.
Exceedances of NYSDEC Restricted Residential Soil Cleanup Objectives (RRSCOs) are presented in gray shading.

mg/kg - milligrams per kilogram = parts per million (ppm)

0 15 30 60
SCALE IN FEET

Map Source:
Geoland Land Surveying P.C. "Block 2714 New Lot 33", updated 04-29-2019.

AKRF
440 Park Avenue South, New York, NY 10016

New 470 Project
12 Eckford Street
Brooklyn, New York

DELINEATION SAMPLING, RI AND SRI SOIL/FILL SAMPLE CONCENTRATIONS ABOVE NYSDEC UUSCOS AND/OR RRSCOS

DATE
8/1/2019

PROJECT NO.
12306

FIGURE
4

©2019 AKRF, Inc. W:\Projects\12306 - 12 ECKFORD STREET\Technical\Hazmat\Drawings\FER\12306 Figs 4,5,6 Chemboxes.dwg last save: mveilleux 8/1/2019 9:49 AM

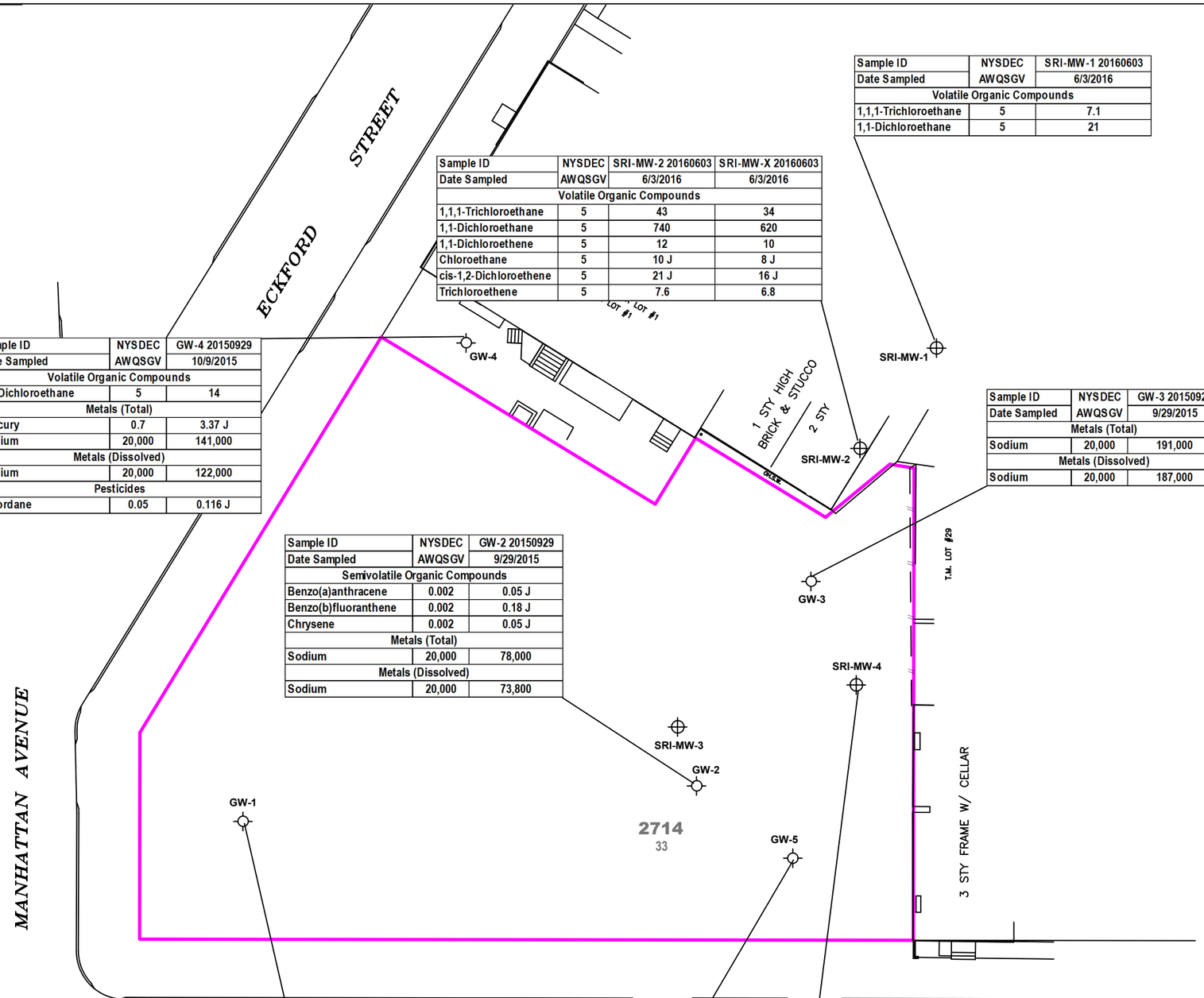

Sample ID	NYSDEC	GW-4 20150929
Date Sampled	AWQSGV	10/9/2015
Volatile Organic Compounds		
1,1-Dichloroethane	5	14
Metals (Total)		
Mercury	0.7	3.37 J
Sodium	20,000	141,000
Metals (Dissolved)		
Sodium	20,000	122,000
Pesticides		
Chlordane	0.05	0.116 J

Sample ID	NYSDEC	SRI-MW-2 20160603	SRI-MW-X 20160603
Date Sampled	AWQSGV	6/3/2016	6/3/2016
Volatile Organic Compounds			
1,1,1-Trichloroethane	5	43	34
1,1-Dichloroethane	5	740	620
1,1-Dichloroethene	5	12	10
Chloroethane	5	10 J	8 J
cis-1,2-Dichloroethene	5	21 J	16 J
Trichloroethene	5	7.6	6.8

Sample ID	NYSDEC	SRI-MW-1 20160603
Date Sampled	AWQSGV	6/3/2016
Volatile Organic Compounds		
1,1,1-Trichloroethane	5	7.1
1,1-Dichloroethane	5	21

Sample ID	NYSDEC	GW-3 20150929
Date Sampled	AWQSGV	9/29/2015
Metals (Total)		
Sodium	20,000	191,000
Metals (Dissolved)		
Sodium	20,000	187,000

Sample ID	NYSDEC	GW-2 20150929
Date Sampled	AWQSGV	9/29/2015
Semivolatile Organic Compounds		
Benzo(a)anthracene	0.002	0.05 J
Benzo(b)fluoranthene	0.002	0.18 J
Chrysene	0.002	0.05 J
Metals (Total)		
Sodium	20,000	78,000
Metals (Dissolved)		
Sodium	20,000	73,800

Sample ID	NYSDEC	GW-1 20150929
Date Sampled	AWQSGV	9/29/2015
Volatile Organic Compounds		
Methyl tert butyl ether	10	20
Metals (Total)		
Lead	25	954.2
Magnesium	35,000	41,200
Nickel	100	104.1
Sodium	20,000	202,000
Metals (Dissolved)		
Magnesium	35,000	38,700
Sodium	20,000	202,000

Sample ID	NYSDEC	GW-5 20150929
Date Sampled	AWQSGV	9/29/2015
Volatile Organic Compounds		
Methyl tert butyl ether	10	48
Metals (Total)		
Sodium	20,000	146,000
Metals (Dissolved)		
Sodium	20,000	127,000

Sample ID	NYSDEC	SRI-MW-4 20160602
Date Sampled	AWQSGV	6/2/2016
Volatile Organic Compounds		
Methyl tert butyl ether	10	21

LEGEND

33	LOT BOUNDARY AND NUMBER
2714	BLOCK NUMBER
	PROJECT SITE BOUNDARY
SRI-MW-4	SUPPLEMENTAL REMEDIAL INVESTIGATION GROUNDWATER WELL LOCATION (AKRF, 2016)
GW-1	REMEDIAL INVESTIGATION GROUNDWATER LOCATION (AKRF, 2015)

Sample ID	NYSDEC	SRI-MW-4 20160602
Date Sampled	AWQSGV	6/2/2016
Volatile Organic Compounds		
Methyl tert butyl ether	10	21

Sample ID
Sample Date
Concentration in Groundwater
Compound in Groundwater

J : The reported concentration is an estimated value.

Only Exceedances of Ambient Water Quality Standards and Guidance Values (AWQSGVS) are shown.

0 15 30 60
SCALE IN FEET

Map Source:
Geoland Land Surveying P.C. "Block 2714 New Lot 33", updated 04-29-2019.

AKRF
440 Park Avenue South, New York, NY 10016

New 470 Project
12 Eckford Street
Brooklyn, New York

SI, RI, AND SRI GROUNDWATER SAMPLE CONCENTRATIONS ABOVE NYSDEC AWQSGVS

DATE
8/1/2019

PROJECT NO.
12306

FIGURE
5

©2019 AKRF, Inc W:\Projects\12306 - 12 ECKFORD STREET\Technical\Hazmat\Drawings\FER\12306 Figs 4,5,6 Chemboxes.dwg last save: mveilleux 8/1/2019 8:40 AM

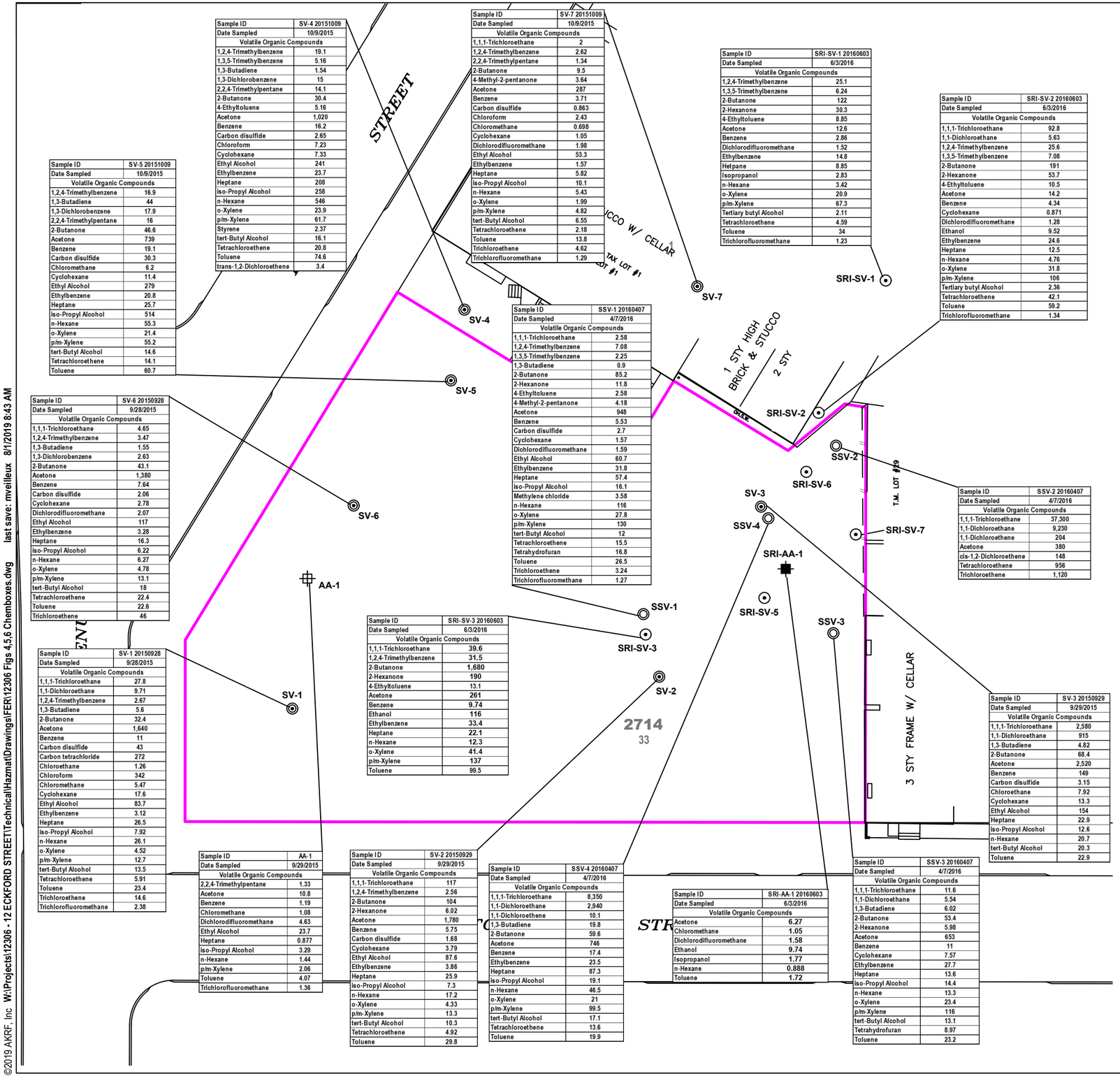

Sample ID	SV-4 20151009
Date Sampled	10/9/2015
Volatile Organic Compounds	
1,2,4-Trimethylbenzene	19.1
1,3,5-Trimethylbenzene	5.16
1,3-Butadiene	1.54
1,3-Dichlorobenzene	15
2,2,4-Trimethylpentane	14.1
2-Butanone	30.4
4-Ethyltoluene	5.16
Acetone	1,020
Benzene	16.2
Carbon disulfide	2.65
Chloroform	7.23
Cyclohexane	7.33
Ethyl Alcohol	241
Ethylbenzene	23.7
Heptane	208
iso-Propyl Alcohol	258
n-Hexane	546
o-Xylene	23.9
p/m-Xylene	61.7
Styrene	2.37
tert-Butyl Alcohol	16.1
Tetrachloroethene	20.8
Toluene	74.6
trans-1,2-Dichloroethene	3.4

Sample ID	SV-7 20151009
Date Sampled	10/9/2015
Volatile Organic Compounds	
1,1,1-Trichloroethane	2
1,2,4-Trimethylbenzene	2.62
2,2,4-Trimethylpentane	1.34
2-Butanone	9.5
4-Methyl-2-pentanone	3.64
Acetone	287
Benzene	3.71
Carbon disulfide	0.863
Chloroform	2.43
Chloromethane	0.698
Cyclohexane	1.05
Dichlorodifluoromethane	1.98
Ethyl Alcohol	53.3
Ethylbenzene	1.57
Heptane	5.82
iso-Propyl Alcohol	10.1
n-Hexane	5.43
o-Xylene	1.99
p/m-Xylene	4.82
tert-Butyl Alcohol	6.55
Tetrachloroethene	2.18
Toluene	13.8
Trichloroethene	4.62
Trichlorofluoromethane	1.29

Sample ID	SRI-SV-1 20160603
Date Sampled	6/3/2016
Volatile Organic Compounds	
1,2,4-Trimethylbenzene	25.1
1,3,5-Trimethylbenzene	6.24
2-Butanone	122
2-Hexanone	30.3
4-Ethyltoluene	8.85
Acetone	12.6
Benzene	2.86
Dichlorodifluoromethane	1.52
Ethylbenzene	14.8
Hetpane	8.85
Isopropanol	2.83
n-Hexane	3.42
o-Xylene	20.9
p/m-Xylene	67.3
Tertiary butyl Alcohol	2.11
Tetrachloroethene	4.59
Toluene	34
Trichlorofluoromethane	1.23

Sample ID	SRI-SV-2 20160603
Date Sampled	6/3/2016
Volatile Organic Compounds	
1,1,1-Trichloroethane	92.8
1,1-Dichloroethane	5.63
1,2,4-Trimethylbenzene	25.6
1,3,5-Trimethylbenzene	7.08
2-Butanone	191
2-Hexanone	53.7
4-Ethyltoluene	10.5
Acetone	14.2
Benzene	4.34
Cyclohexane	0.871
Dichlorodifluoromethane	1.28
Ethanol	9.52
Ethylbenzene	24.6
Heptane	12.5
n-Hexane	4.76
o-Xylene	31.8
p/m-Xylene	106
Tertiary butyl Alcohol	2.36
Tetrachloroethene	42.1
Toluene	59.2
Trichlorofluoromethane	1.34

Sample ID	SV-5 20151009
Date Sampled	10/9/2015
Volatile Organic Compounds	
1,2,4-Trimethylbenzene	16.9
1,3-Butadiene	44
1,3-Dichlorobenzene	17.9
2,2,4-Trimethylpentane	16
2-Butanone	46.6
Acetone	739
Benzene	19.1
Carbon disulfide	30.3
Chloromethane	6.2
Cyclohexane	11.4
Ethyl Alcohol	279
Ethylbenzene	20.8
Heptane	25.7
iso-Propyl Alcohol	514
n-Hexane	55.3
o-Xylene	21.4
p/m-Xylene	55.2
tert-Butyl Alcohol	14.6
Tetrachloroethene	14.1
Toluene	60.7

Sample ID	SSV-1 20160407
Date Sampled	4/7/2016
Volatile Organic Compounds	
1,1,1-Trichloroethane	2.58
1,2,4-Trimethylbenzene	7.08
1,3,5-Trimethylbenzene	2.25
1,3-Butadiene	0.9
2-Butanone	85.2
2-Hexanone	11.8
4-Ethyltoluene	2.58
4-Methyl-2-pentanone	4.18
Acetone	948
Benzene	5.53
Carbon disulfide	2.7
Cyclohexane	1.57
Dichlorodifluoromethane	1.59
Ethyl Alcohol	60.7
Ethylbenzene	31.8
Heptane	57.4
iso-Propyl Alcohol	16.1
Methylene chloride	3.58
n-Hexane	116
o-Xylene	27.8
p/m-Xylene	130
tert-Butyl Alcohol	12
Tetrachloroethene	15.5
Tetrahydrofuran	16.8
Toluene	26.5
Trichloroethene	3.24
Trichlorofluoromethane	1.27

Sample ID	SSV-2 20160407
Date Sampled	4/7/2016
Volatile Organic Compounds	
1,1,1-Trichloroethane	37,300
1,1-Dichloroethane	9,230
1,1-Dichloroethene	204
Acetone	380
cis-1,2-Dichloroethene	148
Tetrachloroethene	956
Trichloroethene	1,120

Sample ID	SV-6 20150928
Date Sampled	9/28/2015
Volatile Organic Compounds	
1,1,1-Trichloroethane	4.65
1,2,4-Trimethylbenzene	3.47
1,3-Butadiene	1.55
1,3-Dichlorobenzene	2.63
2-Butanone	43.1
Acetone	1,380
Benzene	7.64
Carbon disulfide	2.06
Cyclohexane	2.78
Dichlorodifluoromethane	2.07
Ethyl Alcohol	117
Ethylbenzene	3.28
Heptane	16.3
iso-Propyl Alcohol	6.22
n-Hexane	6.27
o-Xylene	4.78
p/m-Xylene	13.1
tert-Butyl Alcohol	18
Tetrachloroethene	22.4
Toluene	22.6
Trichloroethene	46

Sample ID	SRI-SV-3 20160603
Date Sampled	6/3/2016
Volatile Organic Compounds	
1,1,1-Trichloroethane	39.6
1,2,4-Trimethylbenzene	31.5
2-Butanone	1,680
2-Hexanone	190
4-Ethyltoluene	13.1
Acetone	261
Benzene	9.74
Ethanol	116
Ethylbenzene	33.4
Heptane	22.1
n-Hexane	12.3
o-Xylene	41.4
p/m-Xylene	137
Toluene	99.5

Sample ID	SV-1 20150928
Date Sampled	9/28/2015
Volatile Organic Compounds	
1,1,1-Trichloroethane	27.8
1,1-Dichloroethane	9.71
1,2,4-Trimethylbenzene	2.67
1,3-Butadiene	5.6
2-Butanone	32.4
Acetone	1,640
Benzene	11
Carbon disulfide	43
Carbon tetrachloride	272
Chloroethane	1.26
Chloroform	342
Chloromethane	5.47
Cyclohexane	17.6
Ethyl Alcohol	83.7
Ethylbenzene	3.12
Heptane	26.5
iso-Propyl Alcohol	7.92
n-Hexane	26.1
o-Xylene	4.52
p/m-Xylene	12.7
tert-Butyl Alcohol	13.5
Tetrachloroethene	5.91
Toluene	23.4
Trichloroethene	14.6
Trichlorofluoromethane	2.38

Sample ID	SV-3 20150929
Date Sampled	9/29/2015
Volatile Organic Compounds	
1,1,1-Trichloroethane	2,580
1,1-Dichloroethane	915
1,3-Butadiene	4.82
2-Butanone	68.4
Acetone	2,520
Benzene	149
Carbon disulfide	3.15
Chloroethane	7.92
Cyclohexane	13.3
Ethyl Alcohol	154
Heptane	22.9
iso-Propyl Alcohol	12.6
n-Hexane	20.7
tert-Butyl Alcohol	20.3
Toluene	22.9

Sample ID	AA-1
Date Sampled	9/29/2015
Volatile Organic Compounds	
2,2,4-Trimethylpentane	1.33
Acetone	10.8
Benzene	1.19
Chloromethane	1.08
Dichlorodifluoromethane	4.63
Ethyl Alcohol	23.7
Heptane	0.877
iso-Propyl Alcohol	3.29
n-Hexane	1.44
p/m-Xylene	2.06
Toluene	4.07
Trichlorofluoromethane	1.36

Sample ID	SV-2 20150929
Date Sampled	9/29/2015
Volatile Organic Compounds	
1,1,1-Trichloroethane	117
1,2,4-Trimethylbenzene	2.56
2-Butanone	104
2-Hexanone	6.02
Acetone	1,780
Benzene	5.75
Carbon disulfide	1.68
Cyclohexane	3.79
Ethyl Alcohol	87.6
Ethylbenzene	3.86
Heptane	25.9
iso-Propyl Alcohol	7.3
n-Hexane	17.2
o-Xylene	4.33
p/m-Xylene	13.3
tert-Butyl Alcohol	10.3
Tetrachloroethene	4.92
Toluene	29.8

Sample ID	SSV-4 20160407
Date Sampled	4/7/2016
Volatile Organic Compounds	
1,1,1-Trichloroethane	8,350
1,1-Dichloroethane	2,940
1,1-Dichloroethene	10.1
1,3-Butadiene	19.8
2-Butanone	59.6
Acetone	746
Benzene	17.4
Ethylbenzene	23.5
Heptane	87.3
iso-Propyl Alcohol	19.1
n-Hexane	46.5
o-Xylene	21
p/m-Xylene	99.5
tert-Butyl Alcohol	17.1
Tetrachloroethene	13.6
Toluene	19.9

Sample ID	SRI-AA-1 20160603
Date Sampled	6/3/2016
Volatile Organic Compounds	
Acetone	6.27
Chloromethane	1.05
Dichlorodifluoromethane	1.58
Ethanol	9.74
Isopropanol	1.77
n-Hexane	0.888
Toluene	1.72

Sample ID	SSV-3 20160407
Date Sampled	4/7/2016
Volatile Organic Compounds	
1,1,1-Trichloroethane	11.6
1,1-Dichloroethane	5.54
1,3-Butadiene	6.02
2-Butanone	53.4
2-Hexanone	5.98
Acetone	653
Benzene	11
Cyclohexane	7.57
Ethylbenzene	27.7
Heptane	13.6
iso-Propyl Alcohol	14.4
n-Hexane	13.3
o-Xylene	23.4
p/m-Xylene	116
tert-Butyl Alcohol	13.1
Tetrahydrofuran	8.97
Toluene	23.2

LEGEND

33	LOT BOUNDARY AND NUMBER
2714	BLOCK NUMBER
	PROJECT SITE BOUNDARY
SRI-SV-1	SUPPLEMENTAL REMEDIAL INVESTIGATION TEMPORARY SOIL VAPOR POINT LOCATION (AKRF, 2016)
SRI-AA-1	SUPPLEMENTAL REMEDIAL INVESTIGATION AMBIENT AIR SAMPLE LOCATION (AKRF, 2016)
SSV-1	DELINEATION SAMPLING TEMPORARY SOIL VAPOR POINT LOCATION (AKRF, 2016)
SV-1	REMEDIAL INVESTIGATION TEMPORARY SOIL VAPOR POINT LOCATION (AKRF, 2015)
AA-1	REMEDIAL INVESTIGATION AMBIENT AIR SAMPLE LOCATION (AKRF, 2015)

Sample ID	SSV-2 20160407
Date Sampled	4/7/2016
Volatile Organic Compounds	
1,1,1-Trichloroethane	37,300
1,1-Dichloroethane	9,230
1,1-Dichloroethane	204
Acetone	380
cis-1,2-Dichloroethene	148
Tetrachloroethene	956
Trichloroethene	1,120

Sample ID
Sample Date
Concentration in Soil Vapor
Compound in Soil Vapor

0 15 30 60
SCALE IN FEET

Map Source:
Geoland Land Surveying P.C. "Block 2714 New Lot 33", updated 04-29-2019.

AKRF
440 Park Avenue South, New York, NY 10016

New 470 Project
12 Eckford Street
Brooklyn, New York

DELINEATION SAMPLING, RI, AND SRI SOIL VAPOR SAMPLE CONCENTRATIONS

DATE
8/1/2019

PROJECT NO.
12306

FIGURE
6

©2019 AKRF, Inc W:\Projects\12306 - 12 ECKFORD STREET\Technical\Hazmat\Drawings\FER\12306 Figs 4,5,6 Chemboxes.dwg last save: mveilleux 8/1/2019 8:43 AM

LEGEND

33	LOT BOUNDARY AND NUMBER
2714	BLOCK NUMBER
	PROJECT SITE BOUNDARY
	FORMER 550-GALLON UNDERGROUND STORAGE TANK LOCATION
	EXTENT OF EXCAVATION TO 2 FEET BELOW SURFACE GRADE
	EXTENT OF EXCAVATION TO 4 FEET BELOW SURFACE GRADE
	EXTENT OF EXCAVATION TO 12 FEET BELOW SURFACE GRADE

STATE OF NEW YORK · MICHELLE LAPIN · No. 073994-1 · LICENSED PROFESSIONAL ENGINEER

0 15 30 60
SCALE IN FEET

Map Source:
Geoland Land Surveying P.C. "Block 2714 New Lot 33", updated 04-29-2019.

AKRF
440 Park Avenue South, New York, NY 10016

New 470 Project
12 Eckford Street
Brooklyn, New York

REMEDIAL EXCAVATION PLAN

DATE
10/1/2019

PROJECT NO.
12306

FIGURE
7

©2019 AKRF, Inc W:\Projects\12306 - 12 ECKFORD STREET\Technical\Hazmat\Drawings\FER\12306 Fig 8 Remedial Excav Plan.dwg last save: mveilleux 10/1/2019 9:44 AM

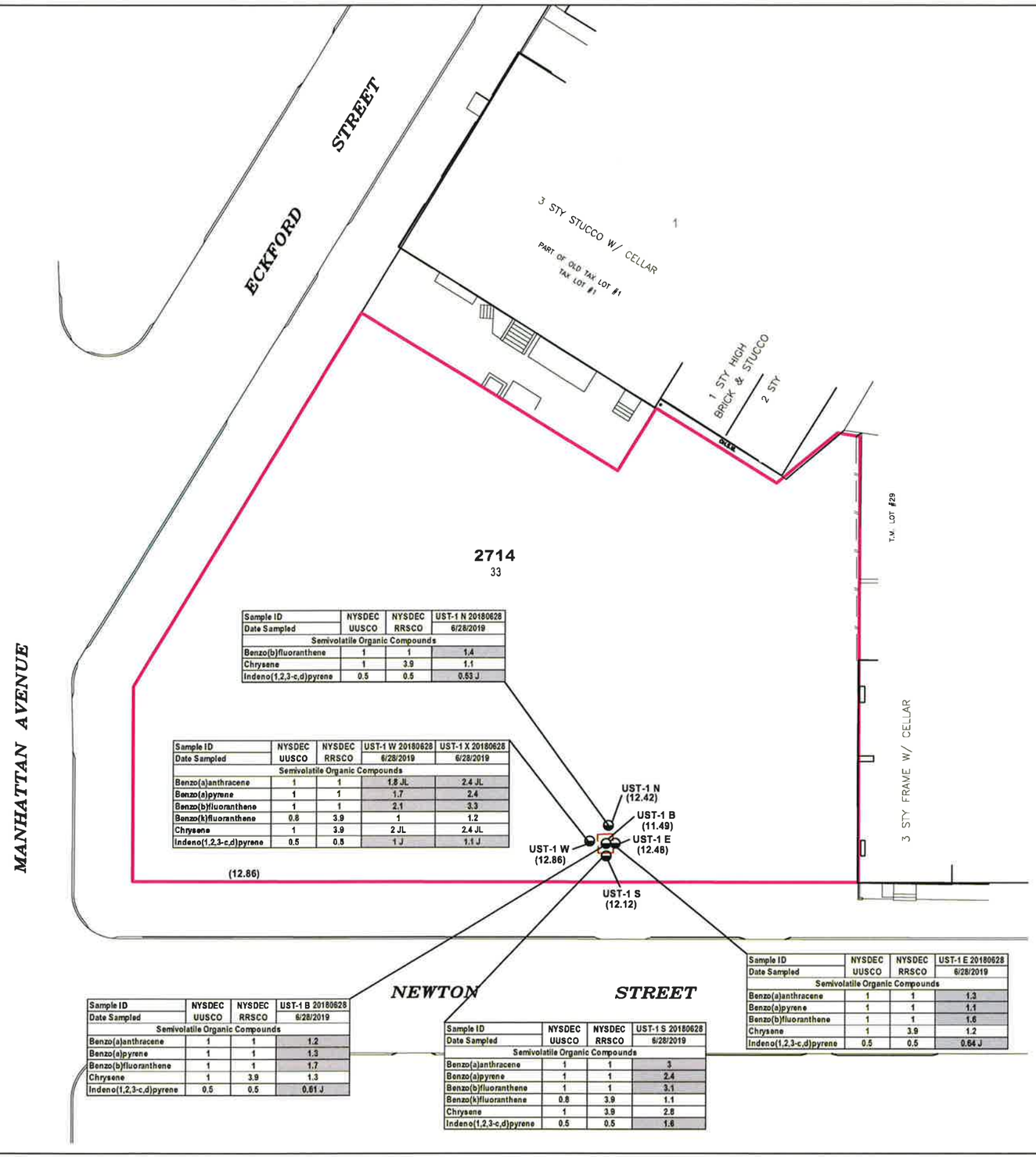

Sample ID	NYSDEC	NYSDEC	UST-1 N 20180628
Date Sampled	UUSCO	RRSCO	6/28/2019
Semivolatile Organic Compounds			
Benzo(b)fluoranthene	1	1	1.4
Chrysene	1	3.9	1.1
Indeno(1,2,3-c,d)pyrene	0.5	0.5	0.63 J

Sample ID	NYSDEC	NYSDEC	UST-1 W 20180628	UST-1 X 20180628
Date Sampled	UUSCO	RRSCO	6/28/2019	6/28/2019
Semivolatile Organic Compounds				
Benzo(a)anthracene	1	1	1.8 JL	2.4 JL
Benzo(a)pyrene	1	1	1.7	2.4
Benzo(b)fluoranthene	1	1	2.1	3.3
Benzo(k)fluoranthene	0.8	3.9	1	1.2
Chrysene	1	3.9	2 JL	2.4 JL
Indeno(1,2,3-c,d)pyrene	0.5	0.5	1 J	1.1 J

Sample ID	NYSDEC	NYSDEC	UST-1 B 20180628
Date Sampled	UUSCO	RRSCO	6/28/2019
Semivolatile Organic Compounds			
Benzo(a)anthracene	1	1	1.2
Benzo(a)pyrene	1	1	1.3
Benzo(b)fluoranthene	1	1	1.7
Chrysene	1	3.9	1.3
Indeno(1,2,3-c,d)pyrene	0.5	0.5	0.61 J

Sample ID	NYSDEC	NYSDEC	UST-1 S 20180628
Date Sampled	UUSCO	RRSCO	6/28/2019
Semivolatile Organic Compounds			
Benzo(a)anthracene	1	1	3
Benzo(a)pyrene	1	1	2.4
Benzo(b)fluoranthene	1	1	3.1
Benzo(k)fluoranthene	0.8	3.9	1.1
Chrysene	1	3.9	2.8
Indeno(1,2,3-c,d)pyrene	0.5	0.5	1.6

Sample ID	NYSDEC	NYSDEC	UST-1 E 20180628
Date Sampled	UUSCO	RRSCO	6/28/2019
Semivolatile Organic Compounds			
Benzo(a)anthracene	1	1	1.3
Benzo(a)pyrene	1	1	1.1
Benzo(b)fluoranthene	1	1	1.6
Chrysene	1	3.9	1.2
Indeno(1,2,3-c,d)pyrene	0.5	0.5	0.64 J

STATE OF NEW YORK
MICHELLE LAPIN
No. 077934-1
LICENSED PROFESSIONAL ENGINEER

LEGEND

33	LOT BOUNDARY AND NUMBER
2714	BLOCK NUMBER
	PROJECT SITE BOUNDARY
	FORMER 550-GALLON UNDERGROUND STORAGE TANK LOCATION
	UST ENDPOINT SAMPLE LOCATION
(12.42)	SAMPLE ELEVATION IN FEET

NOTE: ELEVATIONS IN NAVD88.

Sample ID	NYSDEC	NYSDEC	UST-1 N 20180628
Date Sampled	UUSCO	RRSCO	6/28/2019
Semivolatile Organic Compounds			
Benzo(b)fluoranthene	1	1	1.4
Chrysene	1	3.9	1.1
Indeno(1,2,3-c,d)pyrene	0.5	0.5	0.63 J

Sample ID
Sample Date
Concentration
Analyte/Compound

J - The reported concentration is a value above the method detection limit, but is estimated and may be imprecise.
L - The reported concentration is a value above the method detection limit, but is estimated and is biased low.

UST-1 X 20180628 is a blind duplicate of sample UST-1 W 20180628.

Part 375 Soil Cleanup Objectives (SCOs): SCOs listed in the New York State Department of Environmental Conservation (NYSDEC) "Part 375" Regulations (6 NYCRR Part 375).

Exceedances of NYSDEC Unrestricted Use Soil Cleanup Objectives (UUSCOs) are presented in bold font.
Exceedances of NYSDEC Restricted Residential Soil Cleanup Objectives (RRSCOs) are presented in gray shading.

mg/kg - milligrams per kilogram = parts per million (ppm)

0 15 30 60
SCALE IN FEET

Map Source:
Geoland Land Surveying P.C. "Block 2714 New Lot 33", updated 04-29-2019.

AKRF
440 Park Avenue South, New York, NY 10016

New 470 Project
12 Eckford Street
Brooklyn, New York

UST ENDPOINT SAMPLE CONCENTRATIONS ABOVE NYSDEC UUSCOs AND/OR RRSCOs

DATE
11/15/2019

PROJECT NO.
12306

FIGURE
8

©2019 AKRF, Inc. W:\Projects\12306 - 12 ECKFORD STREET\Technical\Hazmat\Drawings\FER\12306 Fig 9 UST Endpoint Sample Concs.dwg last save: mveilleux 11/15/2019 9:53 AM

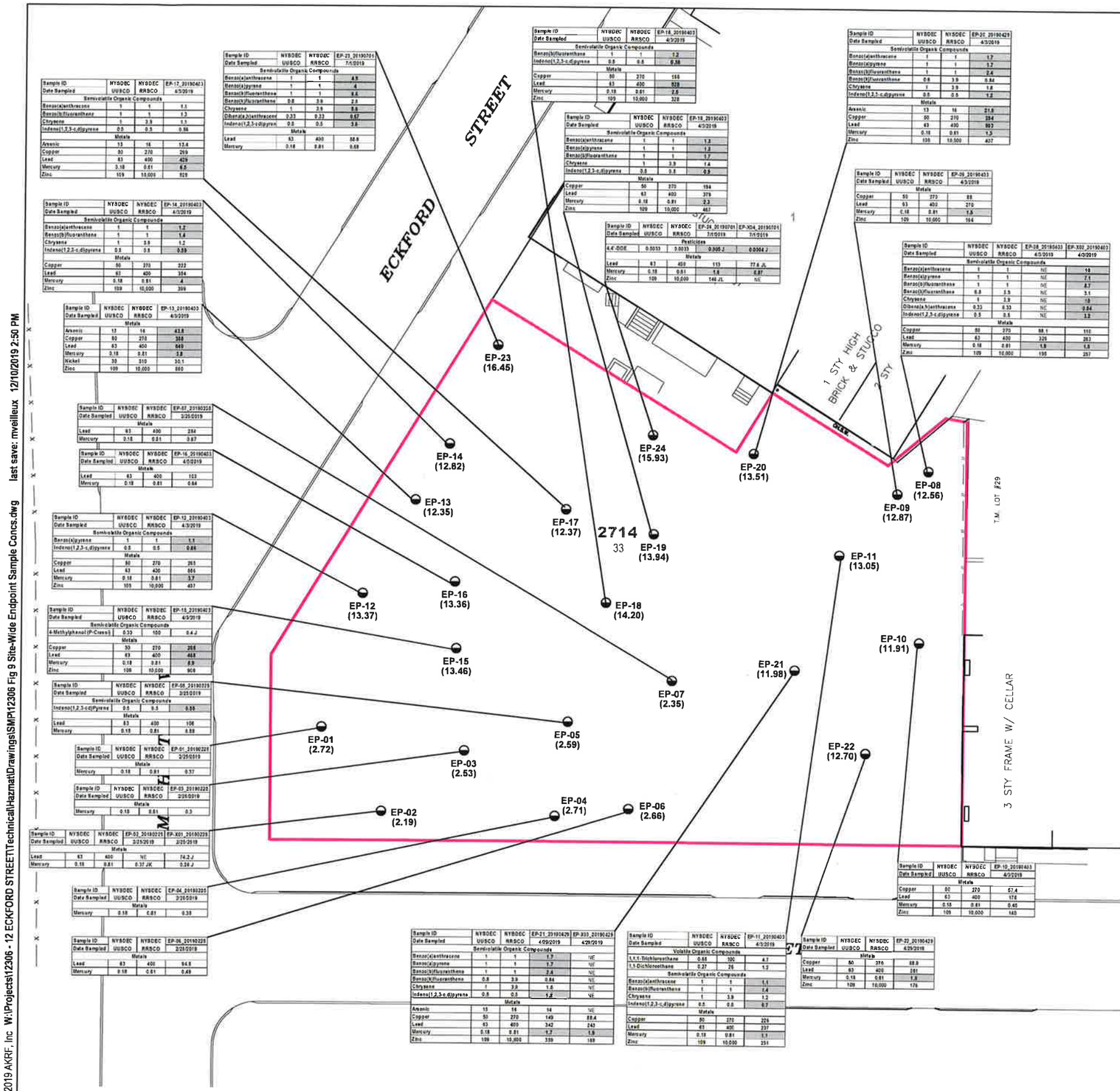

Sample ID	NYSDEC UUSCO	NYSDEC RRSCO	EP-17_20190403
Date Sampled			4/3/2019
Semivolatile Organic Compounds			
Benzo(a)anthracene	1	1	1.1
Benzo(b)fluoranthene	1	1	1.3
Chrysene	1	3.9	1.1
Indeno(1,2,3-c,d)pyrene	0.5	0.5	0.56
Metals			
Arsenic	13	16	13.4
Copper	50	270	259
Lead	63	400	429
Mercury	0.18	0.81	0.5
Zinc	109	10,000	929

Sample ID	NYSDEC UUSCO	NYSDEC RRSCO	EP-14_20190403
Date Sampled			4/3/2019
Semivolatile Organic Compounds			
Benzo(a)anthracene	1	1	1.2
Benzo(b)fluoranthene	1	1	1.4
Chrysene	1	3.9	1.2
Indeno(1,2,3-c,d)pyrene	0.5	0.5	0.39
Metals			
Copper	50	270	222
Lead	63	400	354
Mercury	0.18	0.81	.4
Zinc	109	10,000	359

Sample ID	NYSDEC UUSCO	NYSDEC RRSCO	EP-13_20190403
Date Sampled			4/3/2019
Metals			
Arsenic	13	16	43.8
Copper	50	270	358
Lead	63	400	849
Mercury	0.18	0.81	1.8
Nickel	30	310	35.1
Zinc	109	10,000	860

Sample ID	NYSDEC UUSCO	NYSDEC RRSCO	EP-07_20190225
Date Sampled			2/25/2019
Metals			
Lead	63	400	284
Mercury	0.18	0.81	0.87

Sample ID	NYSDEC UUSCO	NYSDEC RRSCO	EP-16_20190403
Date Sampled			4/3/2019
Metals			
Lead	63	400	103
Mercury	0.18	0.81	0.84

Sample ID	NYSDEC UUSCO	NYSDEC RRSCO	EP-12_20190403
Date Sampled			4/3/2019
Semivolatile Organic Compounds			
Benzo(a)pyrene	1	1	1.1
Indeno(1,2,3-c,d)pyrene	0.5	0.5	0.88
Metals			
Copper	50	270	261
Lead	63	400	561
Mercury	0.18	0.81	3.7
Zinc	109	10,000	437

Sample ID	NYSDEC UUSCO	NYSDEC RRSCO	EP-15_20190403
Date Sampled			4/3/2019
Semivolatile Organic Compounds			
4-Methylphenol (P-Cresol)	0.33	100	0.4 J
Metals			
Copper	50	270	258
Lead	63	400	468
Mercury	0.18	0.81	0.9
Zinc	109	10,000	908

Sample ID	NYSDEC UUSCO	NYSDEC RRSCO	EP-05_20190225
Date Sampled			2/25/2019
Semivolatile Organic Compounds			
Indeno(1,2,3-c,d)Pyrene	0.5	0.5	0.55
Metals			
Lead	63	400	106
Mercury	0.18	0.81	0.88

Sample ID	NYSDEC UUSCO	NYSDEC RRSCO	EP-01_20190225
Date Sampled			2/25/2019
Metals			
Mercury	0.18	0.81	0.37

Sample ID	NYSDEC UUSCO	NYSDEC RRSCO	EP-03_20190225
Date Sampled			2/25/2019
Metals			
Mercury	0.18	0.81	0.3

Sample ID	NYSDEC UUSCO	NYSDEC RRSCO	EP-02_20190225	EP-X01_20190225
Date Sampled			2/25/2019	2/25/2019
Metals				
Lead	63	400	NE	74.2 J
Mercury	0.18	0.81	0.37 JK	0.34 J

Sample ID	NYSDEC UUSCO	NYSDEC RRSCO	EP-04_20190225
Date Sampled			2/25/2019
Metals			
Mercury	0.18	0.81	0.39

Sample ID	NYSDEC UUSCO	NYSDEC RRSCO	EP-06_20190225
Date Sampled			2/25/2019
Metals			
Lead	63	400	94.5
Mercury	0.18	0.81	0.49

Sample ID	NYSDEC UUSCO	NYSDEC RRSCO	EP-23_20190701
Date Sampled			7/1/2019
Semivolatile Organic Compounds			
Benzo(a)anthracene	1	1	4.9
Benzo(a)pyrene	1	1	4
Benzo(k)fluoranthene	1	1	8.4
Benzo(k)fluoranthene	0.8	3.9	2.8
Chrysene	1	3.9	5.8
Dibenz(a,h)anthracene	0.33	0.33	0.67
Indeno(1,2,3-c,d)pyrene	0.5	0.5	3.8
Metals			
Lead	63	400	58.9
Mercury	0.18	0.81	0.68

Sample ID	NYSDEC UUSCO	NYSDEC RRSCO	EP-18_20190403
Date Sampled			4/3/2019
Semivolatile Organic Compounds			
Benzo(b)fluoranthene	1	1	1.2
Indeno(1,2,3-c,d)pyrene	0.5	0.5	0.98
Metals			
Copper	50	270	166
Lead	63	400	529
Mercury	0.18	0.81	2.6
Zinc	109	10,000	328

Sample ID	NYSDEC UUSCO	NYSDEC RRSCO	EP-19_20190403
Date Sampled			4/3/2019
Semivolatile Organic Compounds			
Benzo(a)anthracene	1	1	1.3
Benzo(a)pyrene	1	1	1.3
Benzo(k)fluoranthene	1	1	1.7
Chrysene	1	3.9	1.4
Indeno(1,2,3-c,d)pyrene	0.5	0.5	0.9
Metals			
Copper	50	270	194
Lead	63	400	379
Mercury	0.18	0.81	2.3
Zinc	109	10,000	467

Sample ID	NYSDEC UUSCO	NYSDEC RRSCO	EP-24_20190701	EP-X04_20190701
Date Sampled			7/1/2019	7/1/2019
Pesticides				
4,4'-DDE	0.0033	0.0033	0.005 J	0.0064 J
Metals				
Lead	63	400	113	77.6 JL
Mercury	0.18	0.81	1.6	0.87
Zinc	109	10,000	146 JL	NE

Sample ID	NYSDEC UUSCO	NYSDEC RRSCO	EP-20_20190429
Date Sampled			4/3/2019
Semivolatile Organic Compounds			
Benzo(a)anthracene	1	1	1.7
Benzo(a)pyrene	1	1	1.7
Benzo(b)fluoranthene	1	1	2.4
Benzo(k)fluoranthene	0.8	3.9	0.84
Chrysene	1	3.9	1.8
Indeno(1,2,3-c,d)pyrene	0.5	0.5	1.2
Metals			
Arsenic	13	16	21.8
Copper	50	270	394
Lead	63	400	893
Mercury	0.18	0.81	1.3
Zinc	109	10,000	407

Sample ID	NYSDEC UUSCO	NYSDEC RRSCO	EP-09_20190403
Date Sampled			4/3/2019
Metals			
Copper	50	270	88
Lead	63	400	270
Mercury	0.18	0.81	1.5
Zinc	109	10,000	164

Sample ID	NYSDEC UUSCO	NYSDEC RRSCO	EP-08_20190403	EP-X02_20190403
Date Sampled			4/3/2019	4/3/2019
Semivolatile Organic Compounds				
Benzo(a)anthracene	1	1	NE	10
Benzo(a)pyrene	1	1	NE	7.1
Benzo(b)fluoranthene	1	1	NE	8.7
Benzo(k)fluoranthene	0.8	3.9	NE	3.1
Chrysene	1	3.9	NE	10
Dibenz(a,h)anthracene	0.33	0.33	NE	0.94
Indeno(1,2,3-c,d)pyrene	0.5	0.5	NE	3.2
Metals				
Copper	50	270	98.1	110
Lead	63	400	326	263
Mercury	0.18	0.81	1.8	1.8
Zinc	109	10,000	196	257

Sample ID	NYSDEC UUSCO	NYSDEC RRSCO	EP-10_20190403
Date Sampled			4/3/2019
Metals			
Copper	50	270	67.4
Lead	63	400	176
Mercury	0.18	0.81	0.45
Zinc	109	10,000	145

Sample ID	NYSDEC UUSCO	NYSDEC RRSCO	EP-21_20190429	EP-X03_20190429
Date Sampled			4/29/2019	4/29/2019
Semivolatile Organic Compounds				
Benzo(a)anthracene	1	1	1.7	NE
Benzo(a)pyrene	1	1	1.7	NE
Benzo(b)fluoranthene	1	1	2.4	NE
Benzo(k)fluoranthene	0.8	3.9	0.84	NE
Chrysene	1	3.9	1.8	NE
Indeno(1,2,3-c,d)pyrene	0.5	0.5	1.2	NE
Metals				
Arsenic	13	16	14	NE
Copper	50	270	149	88.4
Lead	63	400	342	240
Mercury	0.18	0.81	1.7	1.9
Zinc	109	10,000	359	189

Sample ID	NYSDEC UUSCO	NYSDEC RRSCO	EP-11_20190403
Date Sampled			4/3/2019
Volatile Organic Compounds			
1,1,1-Trichloroethane	0.68	100	4.7
1,1-Dichloroethane	0.27	26	1.3
Semivolatile Organic Compounds			
Benzo(a)anthracene	1	1	1.1
Benzo(b)fluoranthene	1	1	1.4
Chrysene	1	3.9	1.2
Indeno(1,2,3-c,d)pyrene	0.5	0.5	0.7
Metals			
Copper	50	270	226
Lead	63	400	237
Mercury	0.18	0.81	1.1
Zinc	109	10,000	251

Sample ID	NYSDEC UUSCO	NYSDEC RRSCO	EP-22_20190429
Date Sampled			4/29/2019
Metals			
Copper	50	270	88.9
Lead	63	400	281
Mercury	0.18	0.81	1.8
Zinc	109	10,000	176

LEGEND

33	LOT BOUNDARY AND NUMBER
2714	BLOCK NUMBER
	PROJECT SITE BOUNDARY
	SITE-WIDE ENDPOINT SAMPLE LOCATION
(12.56)	SAMPLE ELEVATION IN FEET

NOTE: ELEVATIONS IN NAVD88.

Sample ID	NYSDEC UUSCO	NYSDEC RRSCO	EP-24_20190701	EP-X04_20190701
Date Sampled			7/1/2019	7/1/2019
Pesticides				
4,4'-DDE	0.0033	0.0033	0.005 J	0.0064 J
Metals				
Lead	63	400	113	77.6 JL
Mercury	0.18	0.81	1.6	0.87
Zinc	109	10,000	146 JL	NE

Sample ID
Sample Date
Concentration
Analyte/Compound

J - The reported concentration is a value above the method detection limit, but is estimated and may be imprecise.
JL - The reported concentration is a value above the method detection limit, but is estimated low and may be imprecise.
K - The reported concentration is proportional to dilution factor and may be exaggerated.
NE - The reported concentration does not exceed the UUSCO or RRSCO.

EP-X01_20190225 is a blind duplicate of sample EP-02_20190225.
EP-X02_20190403 is a blind duplicate of sample EP-08_20190403.
EP-X03_20190429 is a blind duplicate of sample EP-22_20190429.
EP-X04_20190701 is a blind duplicate of sample EP-24_20190701.

Part 375 Soil Cleanup Objectives (SCOs): SCOs listed in the New York State Department of Environmental Conservation (NYSDEC) "Part 375" Regulations (6 NYCRR Part 375).

Exceedances of NYSDEC Unrestricted Use Soil Cleanup Objectives (UUSCOs) are presented in bold font.
Exceedances of NYSDEC Restricted Residential Soil Cleanup Objectives (RRSCOs) are presented in gray shading.

mg/kg - milligrams per kilogram = parts per million (ppm)

0 15 30 60
SCALE IN FEET

Map Source:
Geoland Land Surveying P.C. "Block 2714 New Lot 33", updated 04-29-2019.

STATE OF NEW YORK · MICHELLE LAPIN · No. 073924-1 · LICENSED PROFESSIONAL ENGINEER

AKRF
440 Park Avenue South, New York, NY 10016

New 470 Project
12 Eckford Street
Brooklyn, New York

POST-EXCAVATION SITE-WIDE ENDPOINT SAMPLE CONCENTRATIONS ABOVE NYSDEC UUSCOs AND/OR RRSCOs

DATE
12/10/2019

PROJECT NO.
12306

FIGURE
9

©2019 AKRF, Inc W:\Projects\12306 - 12 ECKFORD STREET\Technical\Hazmat\Drawings\SMP\12306 Fig 9 Site-Wide Endpoint Sample Concs.dwg last save: mveilleux 12/10/2019 2:50 PM

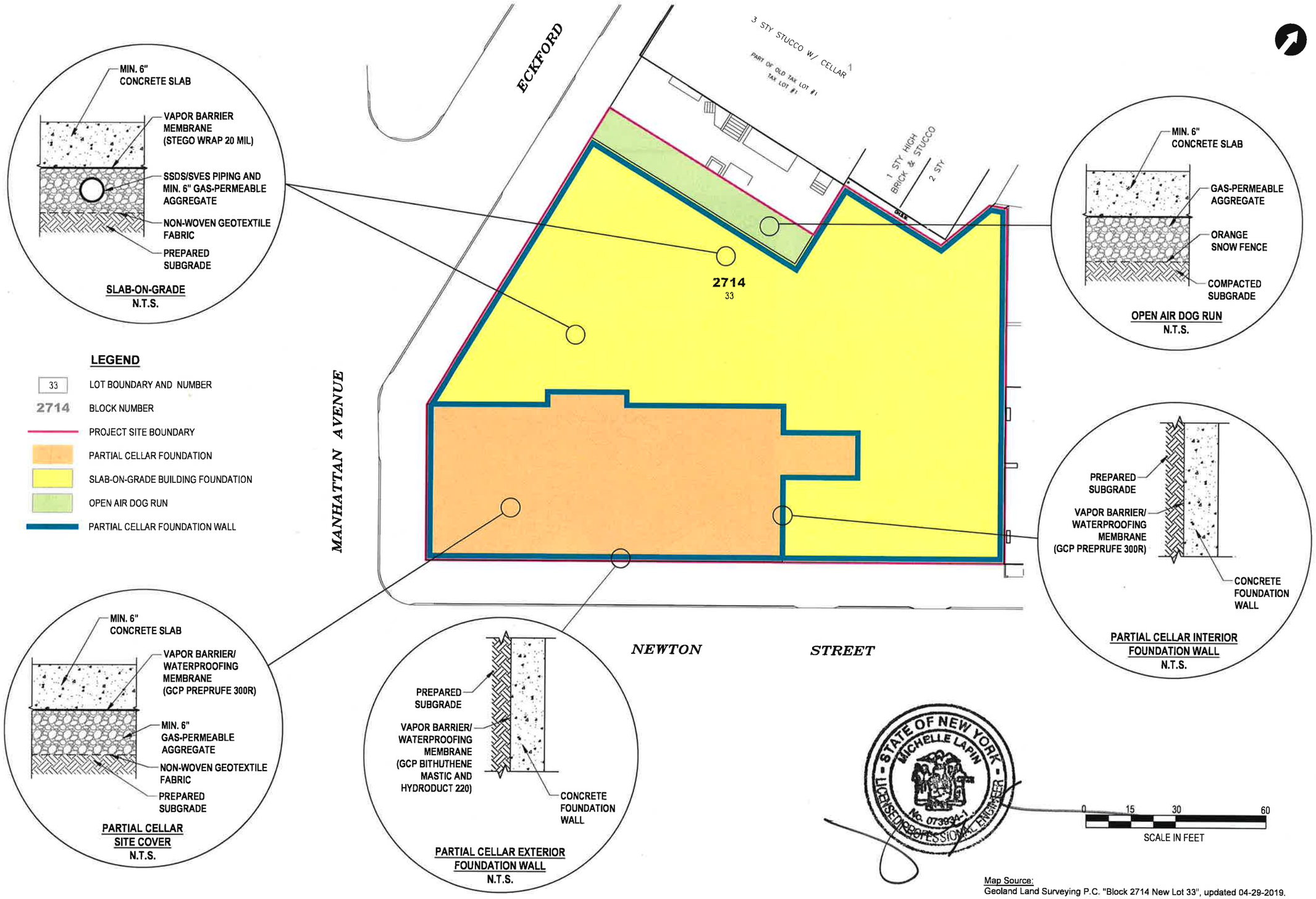

Map Source:
Geoland Land Surveying P.C. "Block 2714 New Lot 33", updated 04-29-2019.

AKRF
440 Park Avenue South, New York, NY 10016

New 470 Project
12 Eckford Street
Brooklyn, New York

COMPOSITE COVER SYSTEM PLAN

DATE
8/1/2019

PROJECT NO.
12306

FIGURE
10

©2019 AKRF, Inc. W:\Projects\12306 - 12 ECKFORD STREET\Technical\Hazmat\Drawings\FER\12306 Fig 10 Composite Cover System Plan.dwg last save: mveilleux 8/1/2019 8:00 AM

LEGEND

33	LOT BOUNDARY AND NUMBER
2714	BLOCK NUMBER
	PROJECT SITE BOUNDARY
	EXTENT OF SLAB-ON-GRADE BUILDING
	EXTENT OF PARTIAL CELLAR
	EXTENT OF OPEN AIR DOG RUN
E— — —	0.002-INCH SLOTTED 4" Ø SCHEDULE 40 PVC PIPING WITH ENDCAP
	SOLID 4" Ø PVC PIPING
	SOLID 6" Ø CPVC PIPING
•	SOLID 6" Ø GALVANIZED STEEL RISER
	PIPE SLEEVE THROUGH GRADE BEAM
	COMMUNICATION SLEEVE THROUGH FOUNDATION ELEMENT
	SOIL VAPOR EXTRACTION WELL LOCATION
△ MP-1	VAPOR MONITORING POINT LOCATION

STATE OF NEW YORK · MICHELLE LAPIN · No. 077 · LICENSED PROFESSIONAL ENGINEER

0 15 30 60
SCALE IN FEET

Map Source:
Geoland Land Surveying P.C. "Block 2714 New Lot 33", updated 04-29-2019.

AKRF
440 Park Avenue South, New York, NY 10016

New 470 Project
12 Eckford Street
Brooklyn, New York

SSDS AND SVES PLAN

DATE	12/10/2019
PROJECT NO.	12306
FIGURE	11

©2019 AKRF, Inc. W:\Projects\12306 - 12 ECKFORD STREET\Technical\Hazmat\Drawings\FER\12306 Fig 12 SSDS and SVES Plan.dwg last save: mveilleux 12/10/2019 2:32 PM

APPENDIX A

ENVIRONMENTAL EASEMENT (EE)

NEW YORK STATE DEPARTMENT OF ENVIRONMENTAL CONSERVATION

Office of the General Counsel
625 Broadway, 14th Floor, Albany, New York 12233-1500
P: (518) 402-9185 | F: (518) 402-9018
www.dec.ny.gov

July 11, 2019

SENT VIA CERTIFIED MAIL
RETURN RECEIPT REQUESTED
AND ELECTRONIC MAIL bcohen@certilmanbalin.com

Barry S. Cohen, Esq.
Partner
Certilman Balin Adler & Hyman, LLP
90 Merrick Avenue, 9'" Floor
East Meadow, NY 11554

RE: Environmental Easement Package
Site Name: New 470 Project
Site No.: C224242

Dear Mr. Cohen:

Enclosed, please find a fully executed Environmental Easement, TP-584 and NYC RPT tax forms referencing the site located at 12 Eckford Street, Brooklyn, County of Kings, New York.

Once the Environmental Easement is recorded, the local municipality will need to be notified via Certified Mail, Return Receipt Requested.

Please return a copy of the recorded easement marked by the County Clerk's Office with the date and location of recording, and a certified copy of the municipal notice. The information from the recorded easement and notices are necessary to process the Certificate of Completion.

If you have any further questions or concerns relating to this matter, please contact our office at (518) 408-0409.

Sincerely,

Jennifer Andaloro, Esq.
Section Chief A
Remediation Bureau

ec: B. Burns, Esq., NYSDEC

NEW YORK STATE OF OPPORTUNITY | Department of Environmental Conservation

ENVIRONMENTAL EASEMENT GRANTED PURSUANT TO ARTICLE 71, TITLE 36 OF THE NEW YORK STATE ENVIRONMENTAL CONSERVATION LAW

THIS INDENTURE made this 3rd day of July, 2019 between Owner(s) New 470 LLC, having an office at 58 Vanderbilt Motor Parkway, Suite 100, Commack, New York 11725, County of Suffolk, State of New York (the "Grantor"), and The People of the State of New York (the "Grantee."), acting through their Commissioner of the Department of Environmental Conservation (the "Commissioner", or "NYSDEC" or "Department" as the context requires) with its headquarters located at 625 Broadway, Albany, New York 12233,

WHEREAS, the Legislature of the State of New York has declared that it is in the public interest to encourage the remediation of abandoned and likely contaminated properties ("sites") that threaten the health and vitality of the communities they burden while at the same time ensuring the protection of public health and the environment; and

WHEREAS, the Legislature of the State of New York has declared that it is in the public interest to establish within the Department a statutory environmental remediation program that includes the use of Environmental Easements as an enforceable means of ensuring the performance of operation, maintenance, and/or monitoring requirements and the restriction of future uses of the land, when an environmental remediation project leaves residual contamination at levels that have been determined to be safe for a specific use, but not all uses, or which includes engineered structures that must be maintained or protected against damage to perform properly and be effective, or which requires groundwater use or soil management restrictions; and

WHEREAS, the Legislature of the State of New York has declared that Environmental Easement shall mean an interest in real property, created under and subject to the provisions of Article 71, Title 36 of the New York State Environmental Conservation Law ("ECL") which contains a use restriction and/or a prohibition on the use of land in a manner inconsistent with engineering controls which are intended to ensure the long term effectiveness of a site remedial program or eliminate potential exposure pathways to hazardous waste or petroleum; and

WHEREAS, Grantor, is the owner of real property located at the address of 12 Eckford Street (a/k/a 470 Manhattan Avenue) in the City of New York, County of Kings and State of New York, known and designated on the tax map of the New York City Department of Finance as tax map parcel number: Block 2714 Lot 33, being the same as that property conveyed to Grantor by deed dated May 7, 2018 and recorded in the City Register of the City of New York as CRFN # 2018000158471. The property subject to this Environmental Easement (the "Controlled Property") comprises approximately 0.5123 +/- acres, and is hereinafter more fully described in the Land Title Survey dated January 20, 2017 and last revised April 29, 2019 prepared by Pawel Kopcinski, L.L.S. of GeoLand Land Surveying P.C., which will be attached to the Site Management Plan. The Controlled Property description is set forth in and attached hereto as Schedule A; and

WHEREAS, the Department accepts this Environmental Easement in order to ensure the protection of public health and the environment and to achieve the requirements for remediation

established for the Controlled Property until such time as this Environmental Easement is extinguished pursuant to ECL Article 71, Title 36; and

NOW THEREFORE, in consideration of the mutual covenants contained herein and the terms and conditions of Brownfield Cleanup Agreement Index Number: C224242-10-16, Grantor conveys to Grantee a permanent Environmental Easement pursuant to ECL Article 71, Title 36 in, on, over, under, and upon the Controlled Property as more fully described herein ("Environmental Easement").

1. Purposes. Grantor and Grantee acknowledge that the Purposes of this Environmental Easement are: to convey to Grantee real property rights and interests that will run with the land in perpetuity in order to provide an effective and enforceable means of encouraging the reuse and redevelopment of this Controlled Property at a level that has been determined to be safe for a specific use while ensuring the performance of operation, maintenance, and/or monitoring requirements; and to ensure the restriction of future uses of the land that are inconsistent with the above-stated purpose.

2. Institutional and Engineering Controls. The controls and requirements listed in the Department approved Site Management Plan ("SMP") including any and all Department approved amendments to the SMP are incorporated into and made part of this Environmental Easement. These controls and requirements apply to the use of the Controlled Property, run with the land, are binding on the Grantor and the Grantor's successors and assigns, and are enforceable in law or equity against any owner of the Controlled Property, any lessees and any person using the Controlled Property.

A. (1) The Controlled Property may be used for:

Restricted Residential as described in 6 NYCRR Part 375-1.8(g)(2)(ii), Commercial as described in 6 NYCRR Part 375-1.8(g)(2)(iii) and Industrial as described in 6 NYCRR Part 375-1.8(g)(2)(iv)

(2) All Engineering Controls must be operated and maintained as specified in the Site Management Plan (SMP);

(3) All Engineering Controls must be inspected at a frequency and in a manner defined in the SMP;

(4) The use of groundwater underlying the property is prohibited without necessary water quality treatment as determined by the NYSDOH or the New York City Department of Health and Mental Hygiene to render it safe for use as drinking water or for industrial purposes, and the user must first notify and obtain written approval to do so from the Department;

(5) Groundwater and other environmental or public health monitoring must be performed as defined in the SMP;

(6) Data and information pertinent to Site Management of the Controlled Property must be reported at the frequency and in a manner defined in the SMP;

(7) All future activities on the property that will disturb remaining contaminated material must be conducted in accordance with the SMP;

(8) Monitoring to assess the performance and effectiveness of the remedy must be performed as defined in the SMP;

(9) Operation, maintenance, monitoring, inspection, and reporting of any mechanical or physical components of the remedy shall be performed as defined in the SMP;

(10) Access to the site must be provided to agents, employees or other representatives of the State of New York with reasonable prior notice to the property owner to assure compliance with the restrictions identified by this Environmental Easement.

B. The Controlled Property shall not be used for Residential purposes as defined in 6NYCRR 375-1.8(g)(2)(i), and the above-stated engineering controls may not be discontinued without an amendment or extinguishment of this Environmental Easement.

C. The SMP describes obligations that the Grantor assumes on behalf of Grantor, its successors and assigns. The Grantor's assumption of the obligations contained in the SMP which may include sampling, monitoring, and/or operating a treatment system, and providing certified reports to the NYSDEC, is and remains a fundamental element of the Department's determination that the Controlled Property is safe for a specific use, but not all uses. The SMP may be modified in accordance with the Department's statutory and regulatory authority. The Grantor and all successors and assigns, assume the burden of complying with the SMP and obtaining an up-to-date version of the SMP from:

Site Control Section
Division of Environmental Remediation
NYSDEC
625 Broadway
Albany, New York 12233
Phone: (518) 402-9553

D. Grantor must provide all persons who acquire any interest in the Controlled Property a true and complete copy of the SMP that the Department approves for the Controlled Property and all Department-approved amendments to that SMP.

E. Grantor covenants and agrees that until such time as the Environmental Easement is extinguished in accordance with the requirements of ECL Article 71, Title 36 of the ECL, the property deed and all subsequent instruments of conveyance relating to the Controlled Property shall state in at least fifteen-point bold-faced type:

This property is subject to an Environmental Easement held by the New York State Department of Environmental Conservation

pursuant to Title 36 of Article 71 of the Environmental Conservation Law.

F. Grantor covenants and agrees that this Environmental Easement shall be incorporated in full or by reference in any leases, licenses, or other instruments granting a right to use the Controlled Property.

G. Grantor covenants and agrees that it shall, at such time as NYSDEC may require, submit to NYSDEC a written statement by an expert the NYSDEC may find acceptable certifying under penalty of perjury, in such form and manner as the Department may require, that:

(1) the inspection of the site to confirm the effectiveness of the institutional and engineering controls required by the remedial program was performed under the direction of the individual set forth at 6 NYCRR Part 375-1.8(h)(3).

(2) the institutional controls and/or engineering controls employed at such site:

(i) are in-place;

(ii) are unchanged from the previous certification, or that any identified changes to the controls employed were approved by the NYSDEC and that all controls are in the Department-approved format; and

(iii) that nothing has occurred that would impair the ability of such control to protect the public health and environment;

(3) the owner will continue to allow access to such real property to evaluate the continued maintenance of such controls;

(4) nothing has occurred that would constitute a violation or failure to comply with any site management plan for such controls;

(5) the report and all attachments were prepared under the direction of, and reviewed by, the party making the certification;

(6) to the best of his/her knowledge and belief, the work and conclusions described in this certification are in accordance with the requirements of the site remedial program, and generally accepted engineering practices; and

(7) the information presented is accurate and complete.

3. Right to Enter and Inspect. Grantee, its agents, employees, or other representatives of the State may enter and inspect the Controlled Property in a reasonable manner and at reasonable times to assure compliance with the above-stated restrictions.

4. Reserved Grantor's Rights. Grantor reserves for itself, its assigns, representatives, and successors in interest with respect to the Property, all rights as fee owner of the Property, including:

A. Use of the Controlled Property for all purposes not inconsistent with, or limited by the terms of this Environmental Easement;

B. The right to give, sell, assign, or otherwise transfer part or all of the underlying fee interest to the Controlled Property, subject and subordinate to this Environmental Easement;

5. Enforcement

A. This Environmental Easement is enforceable in law or equity in perpetuity by Grantor, Grantee, or any affected local government, as defined in ECL Section 71-3603, against the owner of the Property, any lessees, and any person using the land. Enforcement shall not be defeated because of any subsequent adverse possession, laches, estoppel, or waiver. It is not a defense in any action to enforce this Environmental Easement that: it is not appurtenant to an interest in real property; it is not of a character that has been recognized traditionally at common law; it imposes a negative burden; it imposes affirmative obligations upon the owner of any interest in the burdened property; the benefit does not touch or concern real property; there is no privity of estate or of contract; or it imposes an unreasonable restraint on alienation.

B. If any person violates this Environmental Easement, the Grantee may revoke the Certificate of Completion with respect to the Controlled Property.

C. Grantee shall notify Grantor of a breach or suspected breach of any of the terms of this Environmental Easement. Such notice shall set forth how Grantor can cure such breach or suspected breach and give Grantor a reasonable amount of time from the date of receipt of notice in which to cure. At the expiration of such period of time to cure, or any extensions granted by Grantee, the Grantee shall notify Grantor of any failure to adequately cure the breach or suspected breach, and Grantee may take any other appropriate action reasonably necessary to remedy any breach of this Environmental Easement, including the commencement of any proceedings in accordance with applicable law.

D. The failure of Grantee to enforce any of the terms contained herein shall not be deemed a waiver of any such term nor bar any enforcement rights.

6. Notice. Whenever notice to the Grantee (other than the annual certification) or approval from the Grantee is required, the Party providing such notice or seeking such approval shall identify the Controlled Property by referencing the following information:

County, NYSDEC Site Number, NYSDEC Brownfield Cleanup Agreement, State Assistance Contract or Order Number, and the County tax map number or the Liber and Page or computerized system identification number.

Parties shall address correspondence to:	Site Number: C224242 Office of General Counsel NYSDEC 625 Broadway Albany New York 12233-5500
With a copy to:	Site Control Section Division of Environmental Remediation NYSDEC 625 Broadway Albany, NY 12233

All notices and correspondence shall be delivered by hand, by registered mail or by Certified mail and return receipt requested. The Parties may provide for other means of receiving and

communicating notices and responses to requests for approval.

7. Recordation. Grantor shall record this instrument, within thirty (30) days of execution of this instrument by the Commissioner or her/his authorized representative in the office of the recording officer for the county or counties where the Property is situated in the manner prescribed by Article 9 of the Real Property Law.

8. Amendment. Any amendment to this Environmental Easement may only be executed by the Commissioner of the New York State Department of Environmental Conservation or the Commissioner's Designee, and filed with the office of the recording officer for the county or counties where the Property is situated in the manner prescribed by Article 9 of the Real Property Law.

9. Extinguishment. This Environmental Easement may be extinguished only by a release by the Commissioner of the New York State Department of Environmental Conservation, or the Commissioner's Designee, and filed with the office of the recording officer for the county or counties where the Property is situated in the manner prescribed by Article 9 of the Real Property Law.

10. Joint Obligation. If there are two or more parties identified as Grantor herein, the obligations imposed by this instrument upon them shall be joint and several.

11. Consistency with the SMP. To the extent there is any conflict or inconsistency between the terms of this Environmental Easement and the SMP, regarding matters specifically addressed by the SMP, the terms of the SMP will control.

Remainder of Page Intentionally Left Blank

IN WITNESS WHEREOF, Grantor has caused this instrument to be signed in its name.

New 470 LLC:

By: _____

Print Name: Douglas Partrick

Title: Member Date: 6/20/19

Grantor's Acknowledgment

STATE OF NEW YORK)
) ss:
COUNTY OF)

On the 20th day of June, in the year 20 19, before me, the undersigned, personally appeared Douglas S. Partrick, personally known to me or proved to me on the basis of satisfactory evidence to be the individual(s) whose name is (are) subscribed to the within instrument and acknowledged to me that he/she/they executed the same in his/her/their capacity(ies), and that by his/her/their signature(s) on the instrument, the individual(s), or the person upon behalf of which the individual(s) acted, executed the instrument.

_____
Notary Public - State of New York

Katie Ann Donaldson
Notary Public, State of New York
Registration No. 01DO6362228
Qualified in Suffolk County
Commission Expires 07/31/2021

THIS ENVIRONMENTAL EASEMENT IS HEREBY ACCEPTED BY THE PEOPLE OF THE STATE OF NEW YORK, Acting By and Through the Department of Environmental Conservation as Designee of the Commissioner,

By: _____
Michael J. Ryan, Director
Division of Environmental Remediation

Grantee's Acknowledgment

STATE OF NEW YORK)
) ss:
COUNTY OF ALBANY)

On the 3rd day of July, in the year 2019, before me, the undersigned, personally appeared Michael J. Ryan, personally known to me or proved to me on the basis of satisfactory evidence to be the individual(s) whose name is (are) subscribed to the within instrument and acknowledged to me that he/she/ executed the same in his/her/ capacity as Designee of the Commissioner of the State of New York Department of Environmental Conservation, and that by his/her/ signature on the instrument, the individual, or the person upon behalf of which the individual acted, executed the instrument.

_____
Notary Public - State of New York

David J. Chiusano
Notary Public, State of New York
No. 01CH5032146
Qualified in Schenectady County
Commission Expires August 22, 2022

SCHEDULE "A" PROPERTY DESCRIPTION

Metes and Bounds Description
Block 2714
New Lot #33 and Environmental Easement

ALL that certain plot, piece or parcel of land, situate, lying and being in the Borough of Brooklyn, County of Kings, City and State of New York, bounded and described as follows:

BEGINNING at the corner formed by the intersection of the northeasterly side of Manhattan Avenue with the northerly side of Newton Street;

RUNNING THENCE along the northeasterly side of Manhattan Avenue 51 feet 6 inches to the easterly side of Eckford Street;

THENCE along the easterly side of Eckford Street 115 feet 6-3/8 inches;

THENCE easterly at 90 degree angles to Eckford Street 80 feet;

THENCE northerly at 90 degree angles to the last course 19 feet 3-3/4 inches;

THENCE at easterly at 90 degree angles to the last course 37 feet 1 1-1/4 inches;

THENCE northerly formerly an interior angle of 109 degrees 5 minutes 21 seconds, 20 feet 9-7/8 inches;

THENCE easterly 6 feet 1 inch;

THENCE southerly at 90 degree angles to Newton Street 117 feet 8-1/2 inches to the northerly side of Newton Street;

THENCE westerly along the northerly side of Newton Street 192 feet 10-1/2 inches to the point or place of BEGINNING.

Total Area 22,317.4 square feet (.5123 acres)

TP-584 (4/13)

New York State Department of Taxation and Finance

Combined Real Estate Transfer Tax Return, Credit Line Mortgage Certificate, and Certification of Exemption from the Payment of Estimated Personal Income Tax

Recording office time stamp

See Form TP-584-I, Instructions for Form TP-584, *before completing this form. Print or type.*

Schedule A — Information relating to conveyance

Grantor/Transferor	Name *(if individual, last, first, middle initial)* (☐ *check if more than one grantor)*			Social security number
☐ Individual ☐ Corporation ☐ Partnership ☐ Estate/Trust ☐ Single member LLC ☒ Other	NEW 470 LLC			
	Mailing address c/o Heatherwood Organization, 58 Vanderbilt Parkway, Suite 100			Social security number
	City Commack	State NY	ZIP code 11725	Federal EIN 81-0931645
	Single member's name if grantor is a single member LLC *(see instructions)*			Single member EIN or SSN

Grantee/Transferee	Name *(if individual, last, first, middle initial)* (☐ *check if more than one grantee)*			Social security number
☐ Individual ☐ Corporation ☐ Partnership ☐ Estate/Trust ☐ Single member LLC ☒ Other	PEOPLE OF THE STATE OF NEW YORK			
	Mailing address 625 Broadway			Social security number
	City Albany	State NY	ZIP code 12233	Federal EIN 14-6013200
	Single member's name if grantee is a single member LLC *(see instructions)*			Single member EIN or SSN

Location and description of property conveyed

Tax map designation – Section, block & lot *(include dots and dashes)*	SWIS code (six digits)	Street address	City, town, or village	County
Block 2714 Lot 33		470 Manhattan Avenue	Brooklyn	Kings

Type of property conveyed *(check applicable box)*

1 ☐ One- to three-family house
2 ☐ Residential cooperative
3 ☐ Residential condominium
4 ☐ Vacant land
5 ☒ Commercial/Industrial
6 ☐ Apartment building
7 ☐ Office building
8 ☐ Other _____

Date of conveyance 07 | 03 | 2019 (month day year)

Percentage of real property conveyed which is residential real property 0 % *(see instructions)*

Condition of conveyance *(check all that apply)*

a. ☐ Conveyance of fee interest

b. ☐ Acquisition of a controlling interest (state percentage acquired _____ %)

c. ☐ Transfer of a controlling interest (state percentage transferred _____ %)

d. ☐ Conveyance to cooperative housing corporation

e. ☐ Conveyance pursuant to or in lieu of foreclosure or enforcement of security interest *(attach Form TP-584.1, Schedule E)*

f. ☐ Conveyance which consists of a mere change of identity or form of ownership or organization *(attach Form TP-584.1, Schedule F)*

g. ☐ Conveyance for which credit for tax previously paid will be claimed *(attach Form TP-584.1, Schedule G)*

h. ☐ Conveyance of cooperative apartment(s)

i. ☐ Syndication

j. ☐ Conveyance of air rights or development rights

k. ☐ Contract assignment

l. ☐ Option assignment or surrender

m. ☐ Leasehold assignment or surrender

n. ☐ Leasehold grant

o. ☒ Conveyance of an easement

p. ☐ Conveyance for which exemption from transfer tax claimed *(complete Schedule B, Part III)*

q. ☐ Conveyance of property partly within and partly outside the state

r. ☐ Conveyance pursuant to divorce or separation

s. ☐ Other *(describe)* _____

For recording officer's use	Amount received	Date received	Transaction number
	Schedule B., Part I $ Schedule B., Part II $		

Schedule B — Real estate transfer tax return (Tax Law, Article 31)

Part I – Computation of tax due

1 Enter amount of consideration for the conveyance *(if you are claiming a total exemption from tax, check the exemption claimed box, enter consideration and proceed to Part III)* ☐ **Exemption claimed**	1.	0	00
2 Continuing lien deduction *(see instructions if property is taken subject to mortgage or lien)*	2.		
3 Taxable consideration *(subtract line 2 from line 1)*	3.		
4 Tax: $2 for each $500, or fractional part thereof, of consideration on line 3	4.		
5 Amount of credit claimed for tax previously paid *(see instructions and attach Form TP-584.1,* Schedule G)	5.		
6 Total tax due* *(subtract line 5 from line 4)*	6.	0	00

Part II – Computation of additional tax due on the conveyance of residential real property for $1 million or more

1 Enter amount of consideration for conveyance *(from Part I, line 1)*	1.	0	00
2 Taxable consideration *(multiply line 1 by the percentage of the premises which is residential real property, as shown in* Schedule A)	2.		
3 Total additional transfer tax due* *(multiply line 2 by 1% (.01))*	3.	0	00

Part III – Explanation of exemption claimed on Part I, line 1 *(check any boxes that apply)*

The conveyance of real property is exempt from the real estate transfer tax for the following reason:

a. Conveyance is to the United Nations, the United States of America, the state of New York, or any of their instrumentalities, agencies, or political subdivisions (or any public corporation, including a public corporation created pursuant to agreement or compact with another state or Canada) ..... a ☐

b. Conveyance is to secure a debt or other obligation ..... b ☐

c. Conveyance is without additional consideration to confirm, correct, modify, or supplement a prior conveyance ..... c ☐

d. Conveyance of real property is without consideration and not in connection with a sale, including conveyances conveying realty as bona fide gifts ..... d ☐

e. Conveyance is given in connection with a tax sale ..... e ☐

f. Conveyance is a mere change of identity or form of ownership or organization where there is no change in beneficial ownership. (This exemption cannot be claimed for a conveyance to a cooperative housing corporation of real property comprising the cooperative dwelling or dwellings.) Attach Form TP-584.1, Schedule F ..... f ☐

g. Conveyance consists of deed of partition ..... g ☐

h. Conveyance is given pursuant to the federal Bankruptcy Act ..... h ☐

i. Conveyance consists of the execution of a contract to sell real property, without the use or occupancy of such property, or the granting of an option to purchase real property, without the use or occupancy of such property ..... i ☐

j. Conveyance of an option or contract to purchase real property with the use or occupancy of such property where the consideration is less than $200,000 and such property was used solely by the grantor as the grantor's personal residence and consists of a one-, two-, or three-family house, an individual residential condominium unit, or the sale of stock in a cooperative housing corporation in connection with the grant or transfer of a proprietary leasehold covering an individual residential cooperative apartment ..... j ☐

k. Conveyance is not a conveyance within the meaning of Tax Law, Article 31, section 1401(e) *(attach documents supporting such claim)* ..... k ☐

*The total tax (from Part I, line 6 and Part II, line 3 above) is due within 15 days from the date conveyance. Please make check(s) payable to the county clerk where the recording is to take place. If the recording is to take place in the New York City boroughs of Manhattan, Bronx, Brooklyn, or Queens, make check(s) payable to the ***NYC Department of Finance***. If a recording is not required, send this return and your check(s) made payable to the ***NYS Department of Taxation and Finance***, directly to the NYS Tax Department, RETT Return Processing, PO Box 5045, Albany NY 12205-0045.

Schedule C — Credit Line Mortgage Certificate (Tax Law, Article 11)

Complete the following only if the interest being transferred is a fee simple interest.
I (we) certify that: *(check the appropriate box)*

1. ☐ The real property being sold or transferred is not subject to an outstanding credit line mortgage.

2. ☐ The real property being sold or transferred is subject to an outstanding credit line mortgage. However, an exemption from the tax is claimed for the following reason:
   - ☐ The transfer of real property is a transfer of a fee simple interest to a person or persons who held a fee simple interest in the real property (whether as a joint tenant, a tenant in common or otherwise) immediately before the transfer.
   - ☐ The transfer of real property is (A) to a person or persons related by blood, marriage or adoption to the original obligor or to one or more of the original obligors or (B) to a person or entity where 50% or more of the beneficial interest in such real property after the transfer is held by the transferor or such related person or persons (as in the case of a transfer to a trustee for the benefit of a minor or the transfer to a trust for the benefit of the transferor).
   - ☐ The transfer of real property is a transfer to a trustee in bankruptcy, a receiver, assignee, or other officer of a court.
   - ☐ The maximum principal amount secured by the credit line mortgage is $3,000,000 or more, and the real property being sold or transferred is **not** principally improved nor will it be improved by a one- to six-family owner-occupied residence or dwelling.

     Please note: for purposes of determining whether the maximum principal amount secured is $3,000,000 or more as described above, the amounts secured by two or more credit line mortgages may be aggregated under certain circumstances. See TSB-M-96(6)-R for more information regarding these aggregation requirements.
   - ☐ Other *(attach detailed explanation)*.

3. ☐ The real property being transferred is presently subject to an outstanding credit line mortgage. However, no tax is due for the following reason:
   - ☐ A certificate of discharge of the credit line mortgage is being offered at the time of recording the deed.
   - ☐ A check has been drawn payable for transmission to the credit line mortgagee or his agent for the balance due, and a satisfaction of such mortgage will be recorded as soon as it is available.

4. ☐ The real property being transferred is subject to an outstanding credit line mortgage recorded in _____ (insert liber and page or reel or other identification of the mortgage). The maximum principal amount of debt or obligation secured by the mortgage is _____. No exemption from tax is claimed and the tax of _____ is being paid herewith. *(Make check payable to county clerk where deed will be recorded or, if the recording is to take place in New York City but not in Richmond County, make check payable to the **NYC Department of Finance.**)*

Signature (both the grantor(s) and grantee(s) must sign)

The undersigned certify that the above information contained in schedules A, B, and C, including any return, certification, schedule, or attachment, is to the best of his/her knowledge, true and complete, and authorize the person(s) submitting such form on their behalf to receive a copy for purposes of recording the deed or other instrument effecting the conveyance.

Grantor signature	Title	Grantee signature	Title
BUCCINO REALTY, LLC Douglas S. Patrick	Member-Manager		DEC Attorney

Reminder: Did you complete all of the required information in Schedules A, B, and C? Are you required to complete Schedule D? If you checked *e*, *f*, or *g* in Schedule A, did you complete Form TP-584.1? Have you attached your check(s) made payable to the county clerk where recording will take place or, if the recording is in the New York City boroughs of Manhattan, Bronx, Brooklyn, or Queens, to the ***NYC Department of Finance***? If no recording is required, send your check(s), made payable to the ***Department of Taxation and Finance***, directly to the NYS Tax Department, RETT Return Processing, PO Box 5045, Albany NY 12205-0045.

Schedule D - Certification of exemption from the payment of estimated personal income tax (Tax Law, Article 22, section 663)

Complete the following only if a fee simple interest or a cooperative unit is being transferred by an individual or estate or trust.

If the property is being conveyed by a referee pursuant to a foreclosure proceeding, proceed to Part II, and check the second box under *Exemptions for nonresident transferor(s)/seller(s)* and sign at bottom.

Part I - New York State residents

If you are a New York State resident transferor(s)/seller(s) listed in Schedule A of Form TP-584 (or an attachment to Form TP-584), you must sign the certification below. If one or more transferors/sellers of the real property or cooperative unit is a resident of New York State, **each** resident transferor/seller must sign in the space provided. If more space is needed, please photocopy this Schedule D and submit as many schedules as necessary to accommodate all resident transferors/sellers.

Certification of resident transferor(s)/seller(s)

This is to certify that at the time of the sale or transfer of the real property or cooperative unit, the transferor(s)/seller(s) as signed below was a resident of New York State, and therefore is not required to pay estimated personal income tax under Tax Law, section 663(a) upon the sale or transfer of this real property or cooperative unit.

Signature	Print full name	Date
Signature	Print full name	Date
Signature	Print full name	Date
Signature	Print full name	Date

Note: A resident of New York State may still be required to pay estimated tax under Tax Law, section 685(c), but not as a condition of recording a deed.

Part II - Nonresidents of New York State

If you are a nonresident of New York State listed as a transferor/seller in Schedule A of Form TP-584 (or an attachment to Form TP-584) but are not required to pay estimated personal income tax because one of the exemptions below applies under Tax Law, section 663(c), check the box of the appropriate exemption below. If any one of the exemptions below applies to the transferor(s)/seller(s), that transferor(s)/seller(s) is not required to pay estimated personal income tax to New York State under Tax Law, section 663. **Each** nonresident transferor/seller who qualifies under one of the exemptions below must sign in the space provided. If more space is needed, please photocopy this Schedule D and submit as many schedules as necessary to accommodate all nonresident transferors/sellers.

If none of these exemption statements apply, you must complete Form IT-2663, *Nonresident Real Property Estimated Income Tax Payment Form*, or Form IT-2664, *Nonresident Cooperative Unit Estimated Income Tax Payment Form*. For more information, see *Payment of estimated personal income tax*, on page 1 of Form TP-584-I.

Exemption for nonresident transferor(s)/seller(s)

This is to certify that at the time of the sale or transfer of the real property or cooperative unit, the transferor(s)/seller(s) (grantor) of this real property or cooperative unit was a nonresident of New York State, but is not required to pay estimated personal income tax under Tax Law, section 663 due to one of the following exemptions:

☐ The real property or cooperative unit being sold or transferred qualifies in total as the transferor's/seller's principal residence (within the meaning of Internal Revenue Code, section 121) from _____ (Date) to _____ (Date) *(see instructions)*.

☐ The transferor/seller is a mortgagor conveying the mortgaged property to a mortgagee in foreclosure, or in lieu of foreclosure with no additional consideration.

☐ The transferor or transferee is an agency or authority of the United States of America, an agency or authority of the state of New York, the Federal National Mortgage Association, the Federal Home Loan Mortgage Corporation, the Government National Mortgage Association, or a private mortgage insurance company.

Signature	Print full name	Date
Signature	Print full name	Date
Signature	Print full name	Date
Signature	Print full name	Date

Department of Taxation and Finance

Change in Mailing Address for Certain Real Estate Transfer Tax Forms if Using a Private Delivery Service

TP-39
(9/15)

There has been a change to the address that must be used when submitting certain forms through a private delivery service rather than by U.S. Mail.

Send **Form TP-584**, *Combined Real Estate Transfer Tax Return, Credit Line Mortgage Certificate, and Certification of Exemption from the Payment of Estimated Personal Income Tax*, to:

NYS TAX DEPARTMENT
DEPOSIT RESOLUTION UNIT
90 COHOES AVE
GREEN ISLAND NY 12183-1515

Send **Form TP-588**, *Cooperative Housing Corporation Information Return*, to:

NYS TAX DEPARTMENT
TDAB – TRANSFER TAX
90 COHOES AVE
GREEN ISLAND NY 12183-1515

See Publication 55, *Designated Private Delivery Services*, for information about establishing the date you filed, and for the address to use for other forms.

FINANCE NEW • YORK
THE CITY OF NEW YORK DEPARTMENT OF FINANCE

NYC RPT

NEW YORK CITY DEPARTMENT OF FINANCE

REAL PROPERTY TRANSFER TAX RETURN

(Pursuant to Title 11, Chapter 21, NYC Administrative Code)

TYPE OR PRINT LEGIBLY

If the transfer involves more than one grantor or grantee or a partnership, the names, addresses and Social Security Numbers or Employer Identification Numbers of all grantors or grantees and general partners must be provided on Schedule 3, page 3.

R

GRANTOR

Name: NEW 470 LLC

Grantor is a(n) (check one): ☐ individual ☐ partnership (must complete Schedule 3) ☐ corporation ☑ other LLC

Telephone Number:

Permanent mailing address after transfer (number and street): c/o Heatherwood Organization, 58 Vanderbilt Parkway, Suite 100

City and State: Commack, New York

Zip Code: 11725

EMPLOYER IDENTIFICATION NUMBER: 8 1 - 0 9 3 1 6 4 5 OR SOCIAL SECURITY NUMBER: ___ - ___ - ___

GRANTEE

Name: PEOPLE OF THE STATE OF NEW YORK

Grantee is a(n) (check one): ☐ individual ☐ partnership (must complete Schedule 3) ☐ corporation ☑ other

Telephone Number:

Permanent mailing address after transfer (number and street): 625 Broadway

City and State: Albany, New York

Zip Code: 12233

EMPLOYER IDENTIFICATION NUMBER: 1 4 - 6 0 1 3 2 0 0 OR SOCIAL SECURITY NUMBER: ___ - ___ - ___

DO NOT WRITE IN THIS SPACE
FOR OFFICE USE ONLY

RETURN NUMBER ▲

DEED SERIAL NUMBER ▲

NYS REAL ESTATE TRANSFER TAX PAID ▲

PROPERTY LOCATION

LIST EACH LOT SEPARATELY. ATTACH A RIDER IF ADDITIONAL SPACE IS REQUIRED

Address (number and street)	Apt. No.	Borough	Block	Lot	# of Floors	Square Feet	Assessed Value of Property
470 Manhattan Avenue		Kings	2714	33		22,317.4	

DATE OF TRANSFER TO GRANTEE: ___

PERCENTAGE OF INTEREST TRANSFERRED: 100 %

CONDITION OF TRANSFER ▼ See Instructions

Check (✓) all of the conditions that apply and fill out the appropriate schedules on pages 5-11 of this return. Additionally, Schedules 1 and 2 must be completed for all transfers.

a. ☐ .....Arm's length transfer
b. ☐ .....Transfer in exercise of option to purchase
c. ☐ .....Transfer from cooperative sponsor to cooperative corporation
d. ☐ .....Transfer by referee or receiver (complete Schedule A, page 5)
e. ☐ .....Transfer pursuant to marital settlement agreement or divorce decree
f. ☐ .....Deed in lieu of foreclosure (complete Schedule C, page 6)
g. ☐ .....Transfer pursuant to liquidation of an entity (complete Schedule D, page 6)
h. ☐ .....Transfer from principal to agent, dummy, strawman or conduit or vice-versa (complete Schedule E, page 7)
i. ☐ .....Transfer pursuant to trust agreement or will (attach a copy of trust agreement or will)
j. ☐ .....Gift transfer not subject to indebtedness
k. ☐ .....Gift transfer subject to indebtedness
l. ☐ .....Transfer to a business entity in exchange for an interest in the business entity (complete Schedule F, page 7)
m. ☐ .....Transfer to a governmental body
n. ☐ .....Correction deed
o. ☐ .....Transfer by or to a tax exempt organization (complete Schedule G, page 8)
p. ☐ .....Transfer of property partly within and partly without NYC
q. ☐ .....Transfer of successful bid pursuant to foreclosure
r. ☐ .....Transfer by borrower solely as security for a debt or a transfer by lender solely to return such security
s. ☐ .....Transfer wholly or partly exempt as a mere change of identity or form of ownership. Complete Schedule M, page 9)
t. ☐ .....Transfer to a REIT or to a corporation or partnership controlled by a REIT. (Complete Schedule R, pages 10 and 11)
u. ☐ .....Other transfer in connection with financing (describe): ___
v. ☑ .....Other (describe): Environmental Easement

TYPE OF PROPERTY (✓)

a. ☐ 1-3 family house
b. ☐ Individual residential condominium unit
c. ☐ Individual cooperative apartment
d. ☐ Commercial condominium unit
e. ☐ Commercial cooperative
f. ☐ Apartment building
g. ☐ Office building
h. ☐ Industrial building
i. ☐ Utility
j. ☑ OTHER. (describe): Commercial Real Estate

TYPE OF INTEREST (✓)

Check box at LEFT if you intend to record a document related to this transfer. Check box at RIGHT if you do not intend to record a document related to this transfer.

REC.		NON REC.
a. ☐	Fee	☐
b. ☐	Leasehold Grant	☐
c. ☐	Leasehold Assignment or Surrender	☐
d. ☐	Easement	☑
e. ☐	Development Rights	☐
f. ☐	Stock	☐
g. ☐	Partnership Interest	☐
h. ☐	OTHER. (describe):	☐

SCHEDULE 1 - DETAILS OF CONSIDERATION

COMPLETE THIS SCHEDULE FOR ALL TRANSFERS AFTER COMPLETING THE APPROPRIATE SCHEDULES ON PAGES 5 THROUGH 11. ENTER "ZERO" ON LINE 11 IF THE TRANSFER REPORTED WAS WITHOUT CONSIDERATION.

1. Cash	1.	0 00
2. Purchase money mortgage	2.	0 00
3. Unpaid principal of pre-existing mortgage(s)	3.	0 00
4. Accrued interest on pre-existing mortgage(s)	4.	0 00
5. Accrued real estate taxes	5.	0 00
6. Amounts of other liens on property	6.	0 00
7. Value of shares of stock or of partnership interest received	7.	0 00
8. Value of real or personal property received in exchange	8.	0 00
9. Amount of Real Property Transfer Tax and/or other taxes or expenses of the grantor which are paid by the grantee	9.	0 00
10. Other (describe):	10.	0 00
11. **TOTAL CONSIDERATION** (add lines 1 through 10 - must equal amount entered on line 1 of Schedule 2) (see instructions)	11.	0 00

See instructions for special rules relating to transfers of cooperative units, liquidations, marital settlements and transfers of property to a business entity in return for an interest in the entity.

SCHEDULE 2 - COMPUTATION OF TAX

A. **Payment** Pay amount shown on line 14 - *See Instructions*

			Payment Enclosed
1 Total Consideration (from line 11, above)	1.	0 00	
2. Excludable liens (see instructions)	2.	0 00	
3. Consideration (Line 1 less line 2)	3.	0 00	
4. Tax Rate (see instructions)	4.	0 %	
5. Percentage change in beneficial ownership *(see instructions)*	5.	100 %	
6. Taxable consideration (multiply line 3 by line 5)	6.	0 00	
7. Tax (multiply line 6 by line 4)	7.	0 00	
8. Credit (see instructions)	8.	0 00	
9. Tax due (line 7 less line 8) (if the result is negative, enter zero)	9.	0 00	
10. Interest (see instructions)	10.	0 00	
11. Penalty (see instructions)	11.	0 00	
12. Total tax due (add lines 9, 10 and 11)	12.	0 00	
13. Filing Fee	13.	50 00	
14. **Total Remittance Due** (line 12 plus line 13)	14.	50 00	

SCHEDULE 3 - TRANSFERS INVOLVING MULTIPLE GRANTORS AND/OR GRANTEES OR A PARTNERSHIP

NOTE If additional space is needed, attach copies of this schedule or an addendum listing all of the information required below.

GRANTOR(S)/PARTNER(S)

NAME

PERMANENT MAILING ADDRESS AFTER TRANSFER

CITY AND STATE | ZIP CODE

SOCIAL SECURITY NUMBER

OR

EMPLOYER IDENTIFICATION NUMBER

NAME

PERMANENT MAILING ADDRESS AFTER TRANSFER

CITY AND STATE | ZIP CODE

SOCIAL SECURITY NUMBER

OR

EMPLOYER IDENTIFICATION NUMBER

NAME

PERMANENT MAILING ADDRESS AFTER TRANSFER

CITY AND STATE | ZIP CODE

SOCIAL SECURITY NUMBER

OR

EMPLOYER IDENTIFICATION NUMBER

NAME

PERMANENT MAILING ADDRESS AFTER TRANSFER

CITY AND STATE | ZIP CODE

SOCIAL SECURITY NUMBER

OR

EMPLOYER IDENTIFICATION NUMBER

GRANTEE(S)/PARTNER(S)

NAME

PERMANENT MAILING ADDRESS AFTER TRANSFER

CITY AND STATE | ZIP CODE

SOCIAL SECURITY NUMBER

OR

EMPLOYER IDENTIFICATION NUMBER

NAME

PERMANENT MAILING ADDRESS AFTER TRANSFER

CITY AND STATE | ZIP CODE

SOCIAL SECURITY NUMBER

OR

EMPLOYER IDENTIFICATION NUMBER

NAME

PERMANENT MAILING ADDRESS AFTER TRANSFER

CITY AND STATE | ZIP CODE

SOCIAL SECURITY NUMBER

OR

EMPLOYER IDENTIFICATION NUMBER

NAME

PERMANENT MAILING ADDRESS AFTER TRANSFER

CITY AND STATE | ZIP CODE

SOCIAL SECURITY NUMBER

OR

EMPLOYER IDENTIFICATION NUMBER

GRANTOR'S ATTORNEY

Name of Attorney		Telephone Number
Barry Cohen, Esq.		(516) 296-7000
Address (number and street) Certilman Balin Adler & Hyman, LLP 90 Merrick Avenue, 9th Floor	City and State East Meadow, New York	Zip Code 11554
EMPLOYER IDENTIFICATION NUMBER -	OR SOCIAL SECURITY NUMBER - -	

GRANTEE'S ATTORNEY

Name of Attorney		Telephone Number
Office of the General Counsel		518 408-0409
Address (number and street) 625 Broadway, 14th Floor	City and State Albany, New York	Zip Code 12233-1500
EMPLOYER IDENTIFICATION NUMBER -	OR SOCIAL SECURITY NUMBER - -	

CERTIFICATION

I swear or affirm that this return, including any accompanying schedules, affidavits and attachments, has been examined by me and is, to the best of my knowledge, a true and complete return made in good faith, pursuant to Title 11, Chapter 21 of the Administrative Code and the regulations issued thereunder.

GRANTOR

Sworn to and subscribed to

before me on this _____ day

of _____

81-0931645
EMPLOYER IDENTIFICATION NUMBER OR SOCIAL SECURITY NUMBER

New 470 LLC
Name of Grantor

Signature of Notary

Signature of Grantor
Douglas S. Patrick, Member-Manager

Notary's stamp or seal

GRANTEE

Sworn to and subscribed to

before me on this 8th day

of July 2019

14-6013200
EMPLOYER IDENTIFICATION NUMBER OR SOCIAL SECURITY NUMBER

People of the State of New York
Name of Grantee

Signature of Notary

Signature of Grantee
Bradford D. Burns, Associate Attorney

Notary's stamp or seal

COLLEEN A. McCARTHY
Notary Public, State of New York
Qualified in Albany County
No. 02MC5046480
Commission Expires July 17, 2021

GRANTEE: To ensure that your property and water/sewer tax bills are sent to the proper address you must complete the Registration forms included in this packet. Owner's Registration Cards can also be obtained by calling the Department of Finance at (718) 935-8500

APPENDIX B

EXCAVATION WORK PLAN (EWP)

New 470 Project

12 ECKFORD STREET
BROOKLYN, KINGS COUNTY, NEW YORK

EXCAVATION WORK PLAN

NYSDEC Site Number: C224242

Prepared for:

New York State Department of Environmental Conservation
Division of Environmental Remediation, Remedial Bureau B
625 Broadway
Albany, New York 12233

Prepared on Behalf of:

New 470 LLC
58 Vanderbilt Motor Parkway, Suite 100
Commack, New York 11725

Prepared by:

AKRF, Inc.
440 Park Avenue South, 7th Floor
New York, New York 10016

DECEMBER 2019

TABLE OF CONTENTS

1.0 NOTIFICATION 1
1.1 Soil Screening Methods 1
1.2 Soil Staging Methods 2
1.3 Materials Excavation and Load-Out 2
1.4 Materials Transport Off-Site 2
1.5 Materials Disposal Off-Site 3
1.6 Materials Reuse On-Site 4
1.7 Fluids Management 4
1.8 Composite Cover System Restoration 4
1.9 Backfill From Off-Site Sources 4
1.10 Stormwater Pollution Prevention 5
1.11 Excavation Contingency Plan 6
1.12 Community Air Monitoring Plan (CAMP) 6
1.13 Odor Control Plan 6
1.14 Other Nuisances 7

TABLES

Table 1 - Notifications
Table 2 - Soil/Fill Sampling Requirements for Import/Export

LIST OF ACRONYMS

Acronym	Definition
CAMP	Community Air Monitoring Plan
CFR	Code of Federal Regulations
COC	Contaminants of Concern; Constituents of Concern; Chain of Custody; Certificate of Occupancy; Certificate of Completion
DER	Discrete Emission Reduction; Division of Environmental Remediation
EE	Environmental Easement
EPA	United States Environmental Protection Agency
EWP	Excavation Work Plan
HASP	Health and Safety Plan
NYCRR	New York Codes, Rules and Regulations
NYS	New York State
NYSDEC	New York State Department of Environmental Conservation
NYSDOH	New York State Department of Health
NYSDOT	New York State Department of Transportation
PCBs	Polychlorinated biphenyls
PID	Photoionization detector
PRR	Periodic Review Report
QEP	Qualified Environmental Professional
RE	Remedial Engineer
SCOs	Soil Cleanup Objectives
SMP	Site Management Plan
SPDES	State Pollutant Discharge Elimination System
SVOCs	Semivolatile Organic Compounds
TAL	Target Analyte List
TCL	Target Compound List
VOCs	Volatile Organic Compounds

1.0 NOTIFICATION

At least 15 days prior to the start of any activity that is anticipated to encounter remaining contamination, the Site owner or their representative will notify the New York State Department of Environmental Conservation (NYSDEC). Table 1 includes contact information for any notifications.

Table 1: Notifications

Company	Individual Name	Title	Contact Number
NYSDEC	Steve Walsh	Project Manager	(518) 402-9824
	Gerard Burke	NYSDEC Site Control	(518) 402-9767
	Jane O'Connell	Chief, Superfund and Brownfield Cleanup Section	(718) 482-4599
AKRF	Michelle Lapin, P.E.	Remedial Engineer	(646) 388-9520
	Marc S. Godick, LEP	Project Director	(914) 922-2356
	Amy Jordan	Project Manager	(646) 388-9864
New 470 LLC	Ronald Walker	Volunteer Representative	(631) 234-1600

The information provided in the table above will be updated as necessary to provide accurate contact information. The notification will include:

- A detailed description of the work to be performed, including the location and areal extent of excavation, plans/drawings for Site re-grading, intrusive elements or utilities to be installed below the soil cover, estimated volumes of contaminated soil to be excavated and any work that may impact an engineering control;
- A summary of environmental conditions anticipated to be encountered in the work areas, including the nature and concentration levels of contaminants of concern, potential presence of grossly contaminated media, and plans for any pre-construction sampling;
- A schedule for the work, detailing the proposed start and completion of all intrusive work;
- A summary of the applicable components of this EWP;
- A statement that the work will be performed in compliance with this EWP and 29 Code of Federal Regulation (CFR) 1910.120;
- A copy of the contractor's Health and Safety Plan (HASP), in electronic format, if it differs from the HASP provided in Appendix C of the SMP;
- Identification of disposal facilities for potential waste streams; and
- Identification of sources of any anticipated backfill, along with all required chemical testing results.

1.1 Soil Screening Methods

Visual, olfactory and instrument-based [e.g. photoionization detector (PID)] soil screening will be performed by a qualified environmental professional (QEP) during any excavation into known or potentially contaminated material (remaining contamination). Soil screening will be performed when invasive work is done and will include all excavation and invasive work performed during development, such as excavations for foundations and utility work, after issuance of the COC.

Soil will be segregated as needed based on previous environmental data and screening results into material that requires off-site disposal and material that requires testing to determine if the material can be reused on-site as soil beneath a cover or if the material can be used as cover soil. Further

discussion of off-site disposal of materials and on-site reuse is provided in Sections 1.5 and 1.6, respectively.

1.2 Soil Staging Methods

Any soil excavated from the Site will be placed in separate designated stockpiles based on the results of field screening and/or laboratory analysis. Soil stockpiles will be staged at locations based on security, ease of loading onto trucks for off-site disposal, or ease of reuse as backfill.

Soil stockpiles will be continuously encircled with a berm and/or silt fence. Hay bales will be used as needed near catch basins, surface waters, and other discharge points. Stockpiles will be kept covered at all times with appropriately anchored tarps. Stockpiles will be routinely inspected and damaged tarp covers will be promptly replaced. Stockpiles will be inspected at a minimum once each week and after every storm event. Results of inspections will be recorded in a logbook and maintained at the Site and available for inspection by NYSDEC.

Soil that exhibits evidence of contamination [i.e., elevated photoionization detector (PID) readings, staining, odors, etc.] will be separately staged for off-site disposal. Information on staged soil will be tracked in the Site field log book and updated at the end of each workday.

1.3 Materials Excavation and Load-Out

A qualified environmental professional (QEP) or person under supervision of a QEP will oversee all invasive work and the excavation and load-out of all excavated material. The owner of the Site and remedial party (if applicable) and its contractors are responsible for safe execution of all invasive and other work performed under this EWP. The presence of utilities and easements on the Site will be investigated. It will be determined whether a risk or impediment to the planned work under this SMP is posed by utilities or easements on the Site.

Loaded vehicles leaving the Site will be appropriately lined, tarped, securely covered, manifested, and placarded in accordance with appropriate federal, state, local, and NYSDOT requirements (and all other applicable transportation requirements). A truck wash will be operated on-site, as appropriate. The QEP will be responsible for ensuring that all outbound trucks will be washed at the truck wash before leaving the Site until the activities performed under this section are complete. Truck wash waters will be collected and disposed of off-site in an appropriate manner. Locations where vehicles enter or exit the Site shall be inspected daily for evidence of off-Site soil tracking. The QEP will be responsible for ensuring that all egress points for truck and equipment transport from the Site are clean of dirt and other materials derived from the Site during intrusive excavation activities. Cleaning of the adjacent streets will be performed as needed to maintain a clean condition with respect to Site-derived materials.

1.4 Materials Transport Off-Site

All transport of materials will be performed by licensed haulers in accordance with appropriate local, state, and federal regulations, including 6 NYCRR Part 364. Haulers will be appropriately licensed and trucks properly placarded.

Material transported by trucks exiting the Site will be secured with tight-fitting covers. Loose-fitting canvas-type truck covers will be prohibited. If loads contain wet material capable of producing free liquid, truck liners will be used.

Truck transport routes are as follows:

Westbound Traffic

1. Head north on Manhattan Avenue toward Eckford Street
2. Turn slightly right onto Eckford Street.
3. Turn right onto Engert Avenue.
4. Turn right onto Humbolt Street.
5. Turn left onto McGuiness Boulevard South.
6. Turn slightly right to merge onto I-278 Westbound.

Eastbound Traffic

1. Head north on Manhattan Avenue toward Eckford Street
2. Turn slightly right onto Eckford Street.
3. Turn right onto Engert Avenue.
4. Turn right onto Graham Avenue.
5. Turn left onto Meeker Avenue, which becomes Cherry Street.
6. Take the ramp on the left to merge onto I-278 Eastbound.

All trucks loaded with Site materials will exit the vicinity of the Site using only these approved truck routes. These are the most appropriate route and takes into account: (a) limiting transport through residential areas and past sensitive sites; (b) use of city mapped truck routes; (c) prohibiting off-site queuing of trucks entering the facility; (d) limiting total distance to major highways; (e) promoting safety in access to highways; and (f) overall safety in transport; and (g) community input.

Trucks will be prohibited from stopping and idling in the neighborhood outside the project Site. Egress points for truck and equipment transport from the Site will be kept clean of dirt and other materials during Site remediation and development. Queuing of trucks will be performed on-site in order to minimize off-site disturbance. Off-site queuing will be prohibited.

1.5 Materials Disposal Off-Site

All material excavated and removed from the Site will be treated as contaminated and regulated material and will be transported and disposed in accordance with all local, state (including 6NYCRR Part 360), and federal regulations. If disposal of material from this Site is proposed for unregulated off-Site disposal (i.e. clean soil removed for development purposes), a formal request with an associated plan will be made to the NYSDEC. Unregulated off-site management of materials from the Site will not occur without formal NYSDEC approval.

Off-site disposal locations for excavated soils will be identified in the pre-excavation notification. This will include estimated quantities and a breakdown by class of disposal facility if appropriate, i.e. hazardous waste disposal facility, solid waste landfill, petroleum treatment facility, construction and demolition (C&D) recycling facility, etc. Actual disposal quantities and associated documentation will be reported to the NYSDEC in the Periodic Review Report (PRR). This documentation will include: waste profiles, test results, facility acceptance letters, manifests, bills of lading and facility receipts.

Non-hazardous historic fill and contaminated soils taken off-site will be handled, at minimum, as a Municipal Solid Waste per 6NYCRR Part 360-1.2. Material that does not meet Unrestricted SCOs

is prohibited from being taken to a New York State recycling facility (6NYCRR Part 360-16 Registration Facility).

1.6 Materials Reuse On-Site

Contaminated soil, or any material in direct contact with the contaminated soil, may not be separated for reuse on-site and will be disposed of as described in Section 1.6. Soil that does not exhibit evidence of contamination during field screening and is free of debris will be stockpiled and tested at a frequency of one sample per 500 cubic yards and characterized for reuse below the Site cap. Chemical criteria for on-site reuse of material will meet the lower of the NYSDEC Part 375 protection of groundwater or the protection of public health for restricted residential use soil cleanup objectives (SCOs) and can only be used as backfill beneath the composite cover system for the approved use of the Site consistent with the Environmental Easement (EE).

The QEP will ensure that procedures defined for materials reuse in this SMP are followed and that unacceptable material does not remain on-site. Contaminated on-site material, including historic fill and contaminated soil, that is acceptable for reuse on-site will be placed below the demarcation layer or impervious surface, and will not be reused within a cover soil layer, within landscaping berms, or as backfill for subsurface utility lines.

Any demolition material proposed for reuse on-site will be sampled for asbestos and the results will be reported to the NYSDEC for acceptance. Concrete crushing or processing on-Site will not be performed without prior NYSDEC approval. Organic matter (wood, roots, stumps, etc.) or other solid waste derived from clearing and grubbing of the Site will not be reused on-site.

1.7 Fluids Management

Any liquids to be removed from the Site, including but not limited to, excavation dewatering, decontamination waters and groundwater monitoring well purge, and development waters, will be handled, transported and disposed in accordance with applicable local, state, and federal regulations. Dewatering, purge and development fluids will not be recharged back to the land surface or subsurface of the Site, and will be managed off-site, unless prior approval is obtained from NYSDEC.

Discharge of water generated during large-scale construction activities to surface waters (i.e. a local pond, stream or river) will be performed under a State Pollutant Discharge Elimination System (SPDES) permit.

1.8 Composite Cover System Restoration

After the completion of soil removal and any other invasive activities the composite Site cover system will be restored in a manner that complies with the SMP. The demarcation layer will be replaced to provide a visual reference to the top of the residual management zone, the zone that requires adherence to special conditions for disturbance of remaining contaminated soils defined in this SMP. If the type of cover system changes from that which exists prior to the excavation (i.e., a soil cover is replaced by asphalt), this will constitute a modification of the cover element of the remedy and the upper surface of the remaining contamination. A figure showing the modified surface will be included in the subsequent PRR and in an updated SMP.

1.9 Backfill From Off-Site Sources

All materials proposed for import onto the Site will be approved by the QEP and will be in compliance with provisions in this SMP prior to receipt at the Site. A Request to Import/Reuse Fill or Soil form, which can be found at http://www.dec.ny.gov/regulations/67386.html, will be

prepared and submitted to the NYSDEC project manager, allowing a minimum of 5 business days for review.

Material from industrial sites, spill sites, or other environmental remediation sites or potentially contaminated sites will not be imported to the Site.

All imported soils will meet the backfill and cover soil quality standards established in 6NYCRR 375-6.7(d). Based on an evaluation of the land use, protection of groundwater and protection of ecological resources criteria, the resulting soil quality standards are listed in In-Text Table B1. Soils that meet 'exempt' fill requirements under 6 NYCRR Part 360, but do not meet backfill or cover soil objectives for this Site, will not be imported onto the Site without prior approval by NYSDEC. Solid waste will not be imported onto the Site.

Native material from a New York State Department of Transportation (NYSDOT)-designated virgin quarry source will not be sampled prior to use as backfill on the Site. Non-NYSDOT designated virgin quarry sources, or non-virgin imported material that does not have an approved NYSDEC Beneficial Use Determination will be tested at the originating facility in accordance with Section 5.4(e) 10 of NYSDEC DER 10, and at a frequency identified in Table 2:

Table 2
Soil/Fill Sampling Requirements for Import/Export

	VOCs (EPA Method 8260)	SVOCs (EPA Method 8270), PCBs (EPA Method 8082), Pesticides (EPA Method 8081), and TAL Metals (EPA Method 600/7000series)	
Soil Quantity (cubic yards)	Discrete Samples	Composite Samples	Sample Protocol
0-50	1	1	1 discrete sample from one locations exhibiting the highest PID reading or from the middle of the stockpile will comprise a discrete sample for analysis; and 1 composited sample from 5 different locations will comprise a composite sample for analysis
50-100	2	1	
100-200	3	1	
200-300	4	1	
300-400	4	2	
400-500	5	2	
500-800	6	2	
800-1000	7	2	
>1000	Add an additional 2 discrete and 1 composite for each additional 1,000 cubic yards or consult with NYSDEC		

Trucks entering the Site with imported soils will be securely covered with tight fitting covers. Imported soils will be stockpiled separately from excavated materials and covered to prevent dust releases.

1.10 Stormwater Pollution Prevention

Barriers and hay bale checks will be installed and inspected once a week and after every storm event. Results of inspections will be recorded in a logbook and maintained at the Site and available for inspection by the NYSDEC. All necessary repairs shall be made immediately.

Accumulated sediments will be removed as required to keep the barrier and hay bale check functional. All undercutting or erosion of the silt fence toe anchor shall be repaired immediately

with appropriate backfill materials. Manufacturer's recommendations will be followed for replacing silt fencing damaged due to weathering.

Erosion and sediment control measures identified in the SMP shall be observed to ensure that they are operating correctly. Where discharge locations or points are accessible, they shall be inspected to ascertain whether erosion control measures are effective in preventing significant impacts to receiving waters. Silt fencing or hay bales will be installed around the entire perimeter of the construction area, as necessary.

1.11 Excavation Contingency Plan

If underground tanks or other previously unidentified contaminant sources are found during any future post-remedial subsurface excavation or development, excavation activities will be suspended until sufficient equipment is mobilized to address the condition.

Sampling will be performed on product, sediment and surrounding soils, etc., as necessary, to determine the nature of the material and proper disposal method. Chemical analysis will be performed for a full list of analytes [Target Analyte List (TAL) metals; Target Compound List (TCL) volatile organic compounds (VOCs) and semivolatile organic compounds (SVOCs), TCL pesticides, and polychlorinated biphenyls (PCBs)], unless the Site history and previous sampling results provide a sufficient justification to limit the list of analytes. In this case, a reduced list of analytes will be proposed to the NYSDEC for approval prior to sampling.

Identification of unknown or unexpected contaminated media identified by screening during invasive Site work will be promptly communicated by phone to NYSDEC's project manager. Reportable quantities of petroleum product will also be reported to the NYSDEC spills hotline, as necessary. All findings will be included in the PRR.

1.12 Community Air Monitoring Plan (CAMP)

Work zone monitoring will be performed for the health and safety of workers during interior intrusive work activities in accordance with action levels and guidance outlined in the Site-specific CAMP, which is included in Appendix C of the SMP.

1.13 Odor Control Plan

This odor control plan is capable of controlling emissions of nuisance odors off-site and on-site. Specific odor control methods to be used on a routine basis will include monitoring by the on-site QEP. If nuisance odors are identified at the Site boundary, or if odor complaints are received, work will be halted and the source of odors will be identified and corrected. Work will not resume until all nuisance odors have been abated. NYSDEC and NYSDOH will be notified of all odor events and of any other complaints about the project. Implementation of all odor controls, including the halt of work, is the responsibility of the remedial party's Remediation Engineer (RE), and any measures that are implemented will be discussed in the PRR.

All necessary means will be employed to prevent on- and off-site nuisances. At a minimum, these measures will include: (a) limiting the area of open excavations and size of soil stockpiles; (b) shrouding open excavations with tarps and other covers; and (c) using foams to cover exposed odorous soils. If odors develop and cannot be otherwise controlled, additional means to eliminate odor nuisances will include: (d) direct load-out of soils to trucks for off-site disposal; (e) use of chemical odorants in spray or misting systems; and, (f) use of staff to monitor odors in surrounding neighborhoods.

If nuisance odors develop during intrusive work that cannot be corrected, or where the control of nuisance odors cannot otherwise be achieved due to on-site conditions or close proximity to

sensitive receptors, odor control will be achieved by sheltering the excavation and handling areas in a temporary containment structure equipped with appropriate air venting/filtering systems.

1.14 Other Nuisances

A plan for rodent control will be developed and utilized by the contractor prior to and during Site clearing and Site grubbing, and during all remedial work.

A plan will be developed and utilized by the contractor for all remedial work to ensure compliance with local noise control ordinances.

APPENDIX C

SSDS AND SVES AS-BUILT, DRAWINGS, AND MANUFACTURER'S SPECIFICATIONS

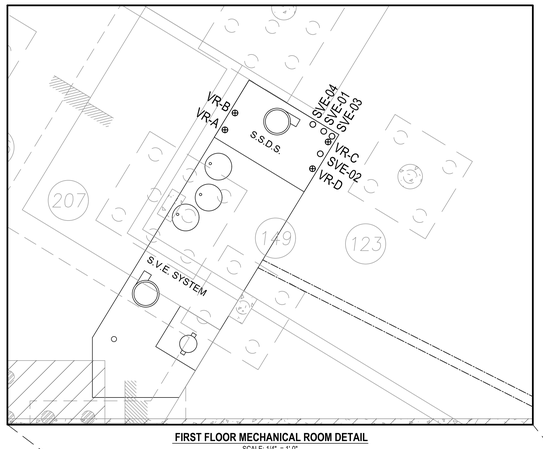

FIRST FLOOR MECHANICAL ROOM DETAIL

SCALE: 1/4" = 1'-0"

LEGEND

- PROJECT SITE BOUNDARY
- SLOTTED 4" PVC PIPE BENEATH SLAB WITH ENDCAP
- PIPE SLEEVE THROUGH GRADE BEAM
- COMMUNICATION SLEEVE THROUGH GRADE BEAM
- SSDS PENETRATION LOCATION OF 4" SUB SLAB PIPE
- SVE PENETRATION LOCATION OF 4" SUB SLAB PIPE
- MP-1 MONITORING POINT LOCATION (SEE ENV-101, DETAIL 6)
- SOLID 4" PVC PIPE BENEATH SLAB
- SOLID 6" Ø CPVC PIPING
- SOLID 6" Ø GALVANIZED STEEL RISER
- PROPOSED SOIL VAPOR EXTRACTION WELL LOCATION (SEE ENV-101, DETAIL 8)
- EXTENT OF PARTIAL CELLAR (WATERPROOFING)
- EXTENT OF SLAB-ON-GRADE CONSTRUCTION (WITH VAPOR BARRIER AND GAS-PERMEABLE AGGREGATE)

0 4 8 16
SCALE IN FEET

NOTES

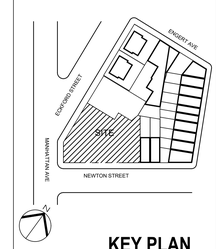

KEY PLAN

Number:	Date:	Revision:
	12/11/2019	AS-BUILT
	01/18/2019	ISSUED FOR BID
	06/22/2018	ISSUED FOR 100% CD
	05/13/2018	ISSUED TO DOB
	04/09/2018	ISSUED TO DOB
	10/09/2017	ISSUED TO DOB
	04/07/2017	ISSUED FOR DOB FILING
	03/03/2017	ISSUED FOR DOB FILING
	02/17/2017	ISSUED FOR 75% CD
	02/03/2017	ISSUED FOR DOB FILING
	12/02/2016	PROGRESS SET
	09/30/2016	ISSUED FOR DOB FILING
	09/01/2016	DESIGN DEVELOPMENT SUBMISSION SET
	06/10/2016	SCHEMATIC DESIGN SUBMISSION SET

Client

HEATHERWOOD LUXURY RENTALS
58 Motor Parkway, Suite 100
Commack, NY 11725
T 631 775 2247 F 631 396 2185

ARCHITECT
HILL | WEST ARCHITECTS
11 BROADWAY
17TH FLOOR
NEW YORK, NY 10004
T. 212 213 8007 F. 212 686 1754

INTERIOR DESIGNER
IN-SITE Interior Design, Inc.
845 Third Avenue, 6th Floor
New York, NY 10022
Tel: 646 290 5232 Fax: 646 290 5001

ENVIRONMENTAL ENGINEER
AKRF, INC
440 Park Avenue South
New York, NY 10016
Tel: 212 696 0670 Fax: 212 726 0942

STRUCTURAL ENGINEER
SEVERUD ASSOCIATES
469 Seventh Avenue
New York, NY 10018
Tel: 212 986 3700 Fax: 212 687 6467

MEP/FP ENGINEER
WSP | PARSONS BRINCKERHOFF
512 Seventh Avenue
New York, NY 10018
Tel: 212 532 9600 Fax: 212 689 7489

EXTERIOR WALL CONSULTANT
CANY
134 West 29TH ST
New York, NY 10001
Tel: 212 414 9623 Fax: xxx xxx xxxx

VERTICAL TRANSPORTATION CONSULTANT
OTIS ELEVATOR
65 FAIRCHILD AVENUE
Plainview, NY 11803
Tel: 516 575 5974 Fax: xxx xxx xxxx

PROJECT

12 ECKFORD ST.
AKA
470 MANHATTAN AVENUE
BROOKLYN, NY

DOB BISCAN:

DOB STAMPS & SIGNATURES:

DWG TITLE

VAPOR BARRIER, SSDS, AND SVES DETAILS

NEW BUILDING # : 320909772

SEAL & SIGNATURE:

DATE: DECEMBER 11, 2019

PROJECT #: 14A21

SCALE: AS NOTED

DWG NO.: ENV-100

CAD FILE: J:\14A21_MANHATTAN AVE

SHEET OF 121

©2019 AKRF, Inc. W:\Projects\12306 - 12 ECKFORD STREET\Technical\Hazmat\Drawings\SSDS Design\Dwgs\ 2018\12306 ENV-100 and ENV-102.dwg last save: mwilkux 12/13/2019 2:31 PM

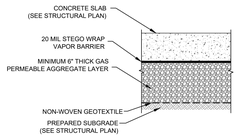

TYPICAL SECTION THROUGH SUB-SLAB/ OUTSIDE SSDS PIPE TRENCH (1)
N.T.S.

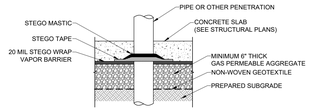

VAPOR BARRIER PENETRATION (2)
N.T.S.

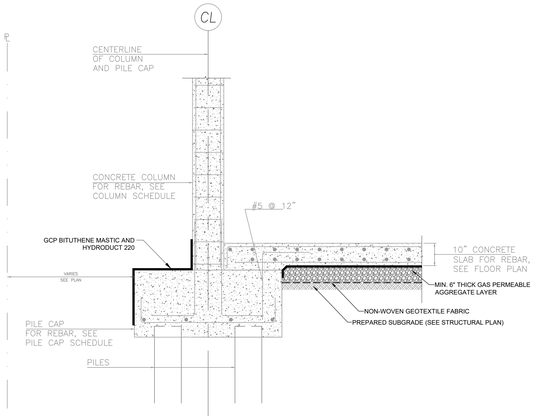

WATERPROOFING/VAPOR BARRIER DETAIL AT TYPICAL EXTERIOR WALL (3)
N.T.S.

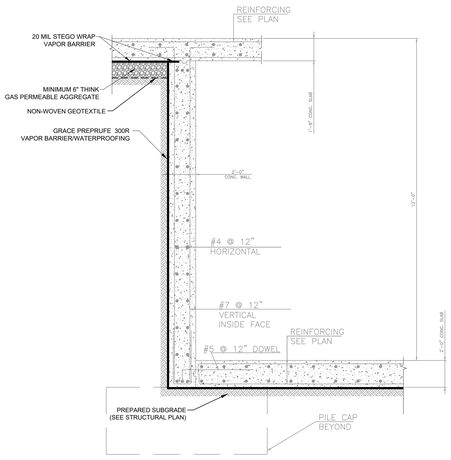

WATERPROOFING DETAIL AT TYPICAL CELLAR LEVEL INTERIOR WALL (4)
N.T.S.

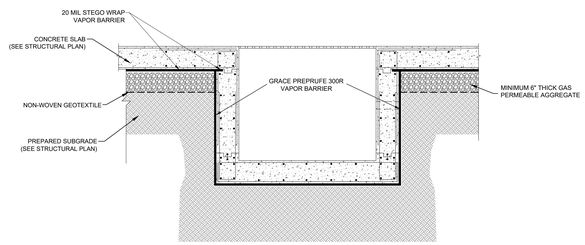

VAPOR BARRIER/WATERPROOFING DETAIL AT TYPICAL ELEVATOR / SUMP PIT / UTILITY PIT ETC. (5)
N.T.S.

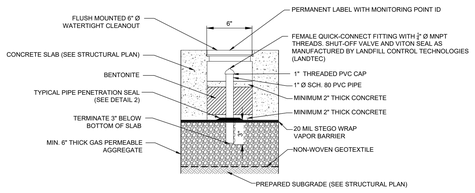

TYPICAL MONITORING POINT DETAIL (6)
N.T.S.

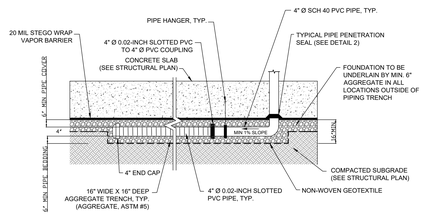

TYPICAL SSDS PIPING PROFILE (7)
N.T.S.

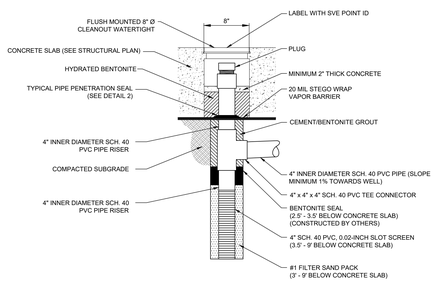

TYPICAL SVE WELL CONSTRUCTION (8)
N.T.S.

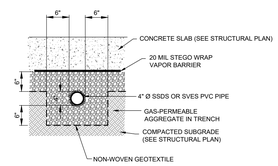

TYPICAL SSDS AND SVES PIPE TRENCH DETAIL (9)
N.T.S.

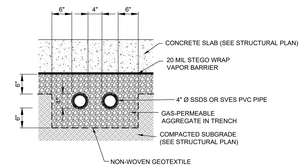

TYPICAL SSDS AND SVES PIPE TRENCH DETAIL (10)
N.T.S.

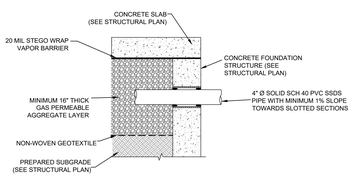

TYPICAL PIPE SLEEVE THROUGH FOUNDATION ELEMENT (11)
N.T.S.

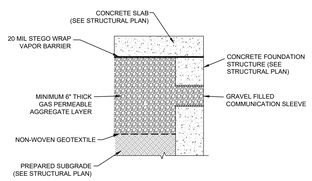

TYPICAL GRAVEL FILLED COMMUNICATION SLEEVE THROUGH FOUNDATION ELEMENT (12)
N.T.S.

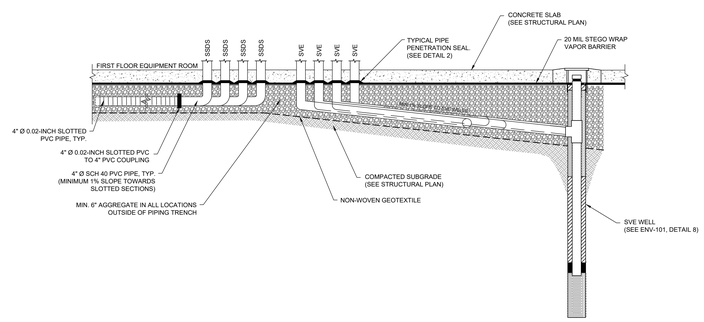

SSDS AND SVE PIPE PENETRATION DIAGRAM (13)
N.T.S.

NOTES

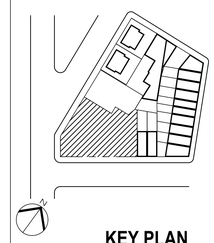

KEY PLAN

Number:	Date:	Revision:
	12/11/2019	AS-BUILT
	01/18/2019	ISSUED FOR BID
	06/22/2018	ISSUED FOR 100% CD
	02/13/2018	ISSUED TO DOB
	04/09/2018	ISSUED TO DOB
	10/09/2017	ISSUED TO DOB
	04/07/2017	ISSUED FOR DOB FILING
	03/03/2017	ISSUED FOR DOB FILING
	02/17/2017	ISSUED FOR 75% CD
	02/03/2017	ISSUED FOR DOB FILING
	12/02/2016	PROGRESS SET
	09/30/2016	ISSUED FOR DOB FILING
	09/01/2016	DESIGN DEVELOPMENT SUBMISSION SET
	06/10/2016	SCHEMATIC DESIGN SUBMISSION SET

Client

HEATHERWOOD LUXURY RENTALS
58 Motor Parkway, Suite 100
Commack, NY 11725
T 631 775 2247 F 631 396 2185

ARCHITECT
HILL | WEST ARCHITECTS
11 BROADWAY
17TH FLOOR
NEW YORK, NY 10004
T. 212 213 8007 F. 212 686 1754

INTERIOR DESIGNER
IN·SITE Interior Design, Inc.
845 Third Avenue, 6th Floor
New York, NY 10022
Tel: 646 290 5232 Fax: 646 290 5001

ENVIRONMENTAL ENGINEER
AKRF, INC
440 Park Avenue South
New York, NY 10016
Tel: 212 696 0670 Fax: 212 726 0942

STRUCTURAL ENGINEER
SEVERUD ASSOCIATES
469 Seventh Avenue
New York, NY 10018
Tel: 212 986 3700 Fax: 212 687 6467

MEP/FP ENGINEER
WSP | PARSONS BRINCKERHOFF
512 Seventh Avenue
New York, NY 10018
Tel: 212 532 9600 Fax: 212 689 7489

EXTERIOR WALL CONSULTANT
CANY
134 West 29TH ST
New York, NY 10001
Tel: 212 414 9623 Fax: xxx xxx xxxx

VERTICAL TRANSPORTATION CONSULTANT
OTIS ELEVATOR
65 FAIRCHILD AVENUE
Plainview, NY 11803
Tel: 516 576 5974 Fax: xxx xxx xxxx

PROJECT
12 ECKFORD ST.
AKA
470 MANHATTAN AVENUE
BROOKLYN, NY

DOB BSCAN:

DOB STAMPS & SIGNATURES:

STATE OF NEW YORK · REGISTERED ARCHITECT

DWG TITLE
VAPOR BARRIER, SSDS, AND SVE DETAILS

NEW BUILDING # : 320909772

SEAL & SIGNATURE:

DATE: DECEMBER 11, 2019
PROJECT # 14A21
SCALE: AS NOTED
DWG NO. ENV-101

CAD FILE: J:\14A21_MANHATTAN AVE
SHEET OF 121

©2019 AKRF, Inc. W:\Projects\12306 - 12 ECKFORD STREET\Technical\Hazmat\Drawings\SSDS\ DesignSet 20190125\06 ENV-101 and ENV-103.dwg last save: mvollrice 12/12/2019 2:00 PM

1 ENV102 FIRST FLOOR RISER LOCATION PLAN
SCALE: 1" = 5'

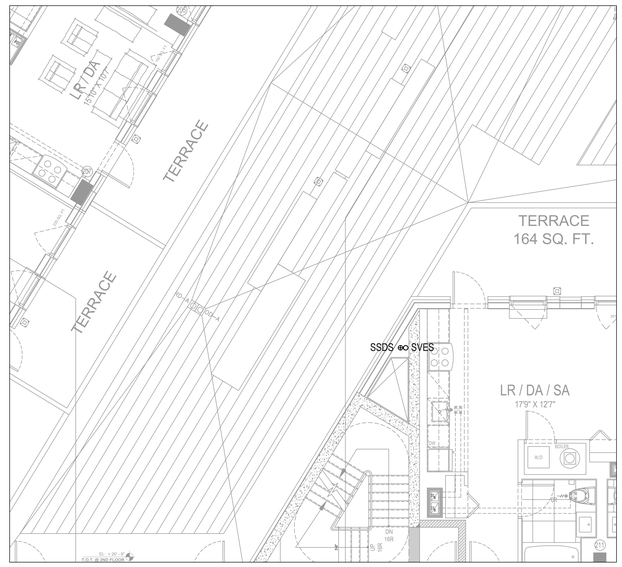

2 ENV102 SECOND FLOOR RISER LOCATION PLAN
SCALE: 1" = 5'

3 ENV102 THIRD - SIXTH FLOOR RISER LOCATION PLAN
SCALE: 1" = 5'

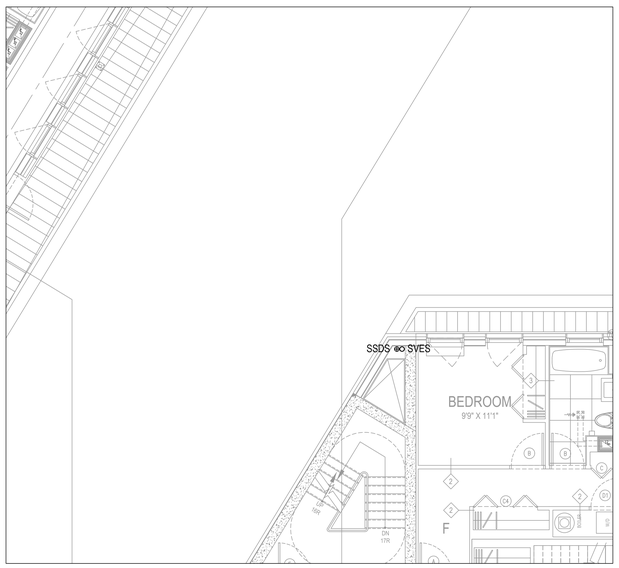

4 ENV102 SEVENTH FLOOR RISER LOCATION PLAN
SCALE: 1" = 5'

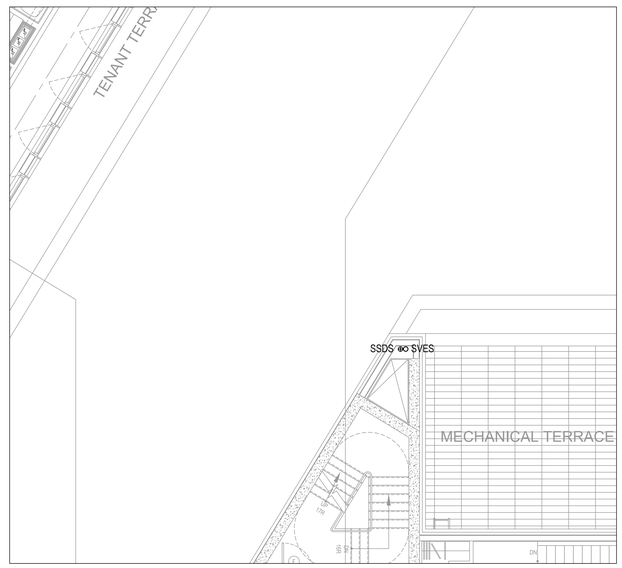

5 ENV102 EIGHTH FLOOR RISER LOCATION PLAN
SCALE: 1" = 5'

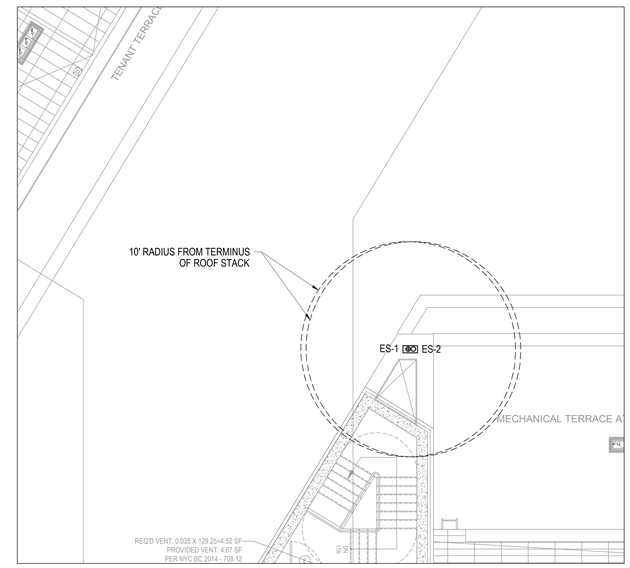

6 ENV102 ROOF RISER LOCATION PLAN
SCALE: 1" = 5'

LEGEND

ES-1 ES-2	SSDS AND SVES EXHAUST STACK
SSDS	VERTICAL SSDS RISER EXTENDS TO STACK ON 8th FLOOR ROOF (REFER TO DETAILS 1 AND 3 ON ENV-103)
SVES	VERTICAL SVE RISER EXTENDS TO STACK ON 8th FLOOR ROOF (REFER TO DETAILS 1 AND 4 ON ENV-103)

NOTES

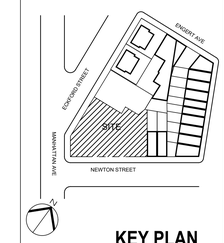

KEY PLAN

Number:	Date:	Revision:
	12/11/2019	AS-BUILT
	01/18/2019	ISSUED FOR BID
	06/22/2018	ISSUED FOR 100% CD
	05/13/2018	ISSUED TO DOB
	04/09/2018	ISSUED TO DOB
	10/20/2017	ISSUED TO DOB
	04/07/2017	ISSUED FOR DOB FILING
	03/03/2017	ISSUED FOR DOB FILING
	02/17/2017	ISSUED FOR 75% CD
	02/03/2017	ISSUED FOR DOB FILING
	12/02/2016	PROGRESS SET
	09/30/2016	ISSUED FOR DOB FILING
	09/01/2016	DESIGN DEVELOPMENT SUBMISSION SET
	06/10/2016	SCHEMATIC DESIGN SUBMISSION SET

Client

HEATHERWOOD LUXURY RENTALS
58 Motor Parkway, Suite 100
Commack, NY 11725
T 631 775 2247 F 631 396 2185

ARCHITECT
HILL | WEST ARCHITECTS
11 BROADWAY
17TH FLOOR
NEW YORK, NY 10004
T. 212 213 8007 F. 212 686 1754

INTERIOR DESIGNER
IN·SITE Interior Design, Inc.
845 Third Avenue, 6th Floor
New York, NY 10022
Tel: 646 290 5232 Fax: 646 290 5001

ENVIRONMENTAL ENGINEER
AKRF, INC
440 Park Avenue South
New York, NY 10016
Tel: 212 696 0670 Fax: 212 726 0942

STRUCTURAL ENGINEER
SEVERUD ASSOCIATES
469 Seventh Avenue
New York, NY 10018
Tel: 212 986 3700 Fax: 212 687 6467

MEP/FP ENGINEER
WSP | PARSONS BRINCKERHOFF
512 Seventh Avenue
New York, NY 10018
Tel: 212 532 9600 Fax: 212 689 7489

EXTERIOR WALL CONSULTANT
CANY
134 West 29TH ST
New York, NY 10001
Tel: 212 414 9623 Fax: xxx xxx xxxx

VERTICAL TRANSPORTATION CONSULTANT
OTIS ELEVATOR
65 FAIRCHILD AVENUE
Plainview, NY 11803
Tel: 516 576 5974 Fax: xxx xxx xxxx

PROJECT
12 ECKFORD ST.
AKA
470 MANHATTAN AVENUE
BROOKLYN, NY

DOB BSCAN:

DOB STAMPS & SIGNATURES:

DWG TITLE
VAPOR BARRIER, SSDS, AND SVE DETAILS

NEW BUILDING # : 320909772

SEAL & SIGNATURE:

DATE: DECEMBER 11, 2019
PROJECT # 14A21
SCALE AS NOTED
DWG NO. ENV-102
CAD FILE: J:\14A21_MANHATTAN AVE
SHEET OF 121

©2019 AKRF, Inc. W:\Projects\12306 - 12 ECKFORD STREET\Technical\Revit\Drawings\SSDS Design\Sept 2016\12306 ENV-100 and ENV-102.dwg last save: mwilhoux 12/13/2019 2:01 PM

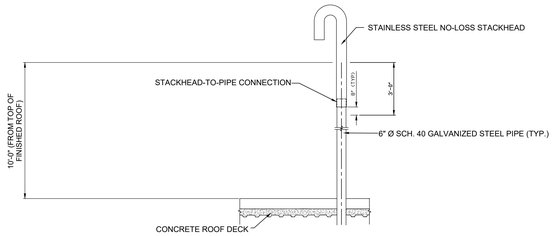

1 **SSDS/SVES EXHAUST STACK MOUNTING DETAIL**
N.T.S.

INSTRUMENT SCHEDULE						
ITEM	DESCRIPTION	SERVICE	REQUIREMENTS	RANGE	REMARKS	MANUFACTURER/MODEL
MAGNEHELIC GAUGE	PRESSURE DIFFERENTIAL	SSDS/SVE	N/A	VARIOUS	FOR EACH MANIFOLD LEG AND RISER	DWYER INSTRUMENT INC SERIES 2010 (SSDS) 2050 (SVE)
DPS	DIFFERENTIAL PRESSURE SWITCH	AIS - SSDS/SVE	N/A	0.4-1.6 IN H_2O	CONNECT TO AIS FOR BLOWER ASSEMBLIES	DWYER INSTRUMENT INC SERIES 1900, MODEL 1910-10
CONTROL PANEL	SUCTION FANS	SSDS/SVE	60HZ, 1 PHASE, 115 VOLTS	N/A	FOR BLOWERS	PANEL TO INCLUDE LOCAL ALARMS AND VFD FOR EACH BLOWER
FLOW METER ASSEMBLY	FLOW	SSDS/SVE	60HZ, 1 PHASE, 115 VOLTS	N/A	FOR EACH MANIFOLD LEG	DWYER DIFFERENTIAL PRESSURE GAUGE (2000-0) AND PITOT TUBE ASSESMBLY (DS-300-4 OR DS-300-2)
CARBON VESSEL 1	VAPOR TREATMENT	SVE	N/A	MAX. PRESSURE LOSS	CONNECTED IN SERIES	TETRASOLV VR-400
CARBON VESSEL 2	VAPOR TREATMENT	SVE	N/A	MAX. PRESSURE LOSS	CONNECTED IN SERIES	TETRASOLV VR-400

FAN SCHEDULE							
UNIT NO.	AREAS SERVICED	SERVICE	LOCATION	CFM	VAC (INCHES H_2O)	PERFORMANCE REQUIREMENTS	MANUFACTURER/MODEL
SF-1	SUB-SLAB GRAVEL AREA	SSDS	FIRST FLOOR EQUIPMENT ROOM	300	9.5	60 HZ, 3-PHASE, 230 OR 400 VOLTS	IPF CDD-200 ECO
SF-2	NORTHEAST AND EASTERN SITE	SVES	FIRST FLOOR EQUIPMENT ROOM	400	55	60 HZ, 3-PHASE, 230 OR 400 VOLTS	SCL - K09-MS-10-3

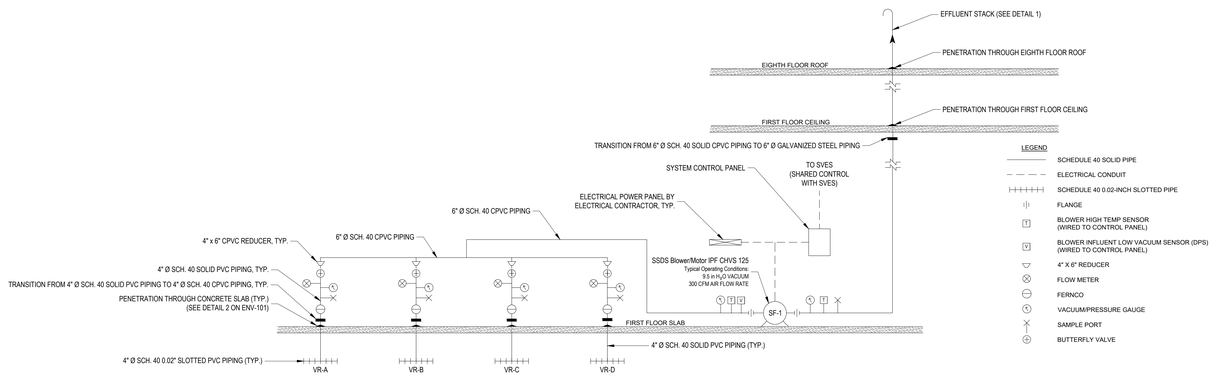

3 **SSDS PROCESS AND INSTRUMENT DIAGRAM**
N.T.S.

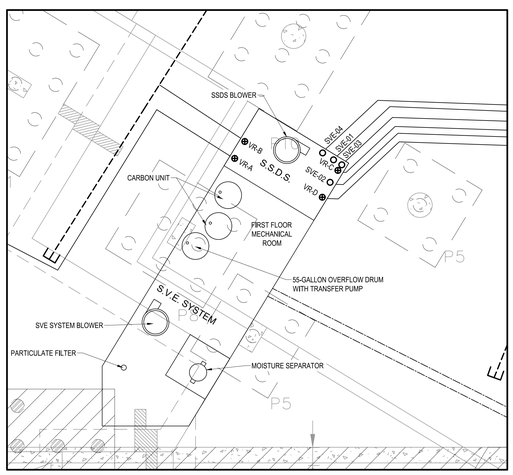

2 **FIRST FLOOR MECHANICAL ROOM LAYOUT**
N.T.S.

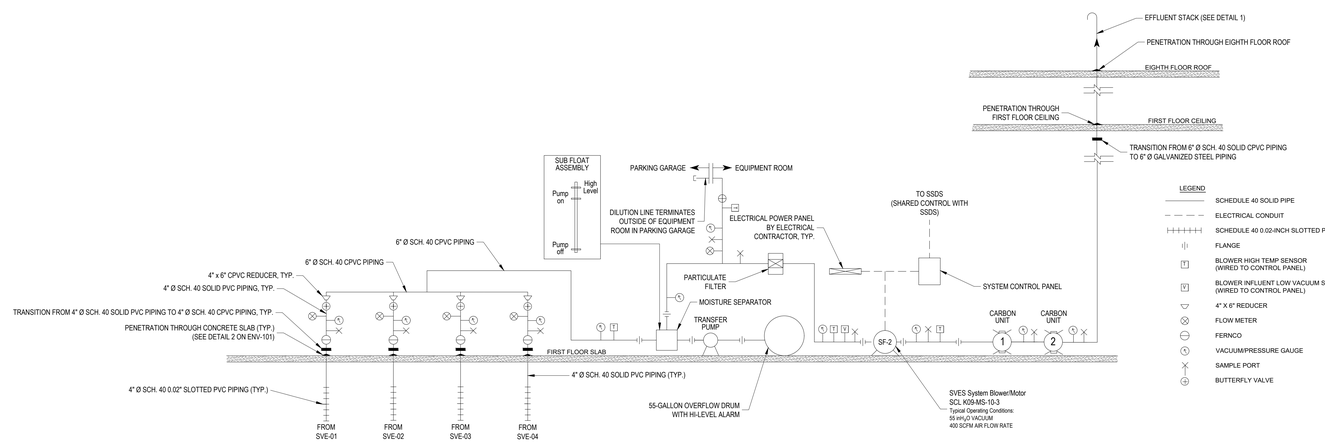

4 **SVES PROCESS AND INSTRUMENT DIAGRAM**
N.T.S.

NOTES

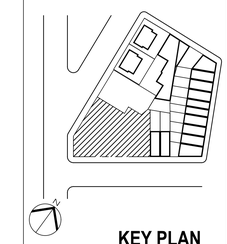

KEY PLAN

Number:	Date:	Revision:
	12/11/2019	AS-BUILT
	01/18/2019	ISSUED FOR BID
	06/22/2018	ISSUED FOR 100% CD
	05/13/2018	ISSUED TO DOB
	04/09/2018	ISSUED TO DOB
	10/05/2017	ISSUED TO DOB
	04/07/2017	ISSUED FOR DOB FILING
	03/03/2017	ISSUED FOR DOB FILING
	02/17/2017	ISSUED FOR 75% CD
	02/03/2017	ISSUED FOR DOB FILING
	12/02/2016	PROGRESS SET
	09/30/2016	ISSUED FOR DOB FILING
	09/01/2016	DESIGN DEVELOPMENT SUBMISSION SET
	06/10/2016	SCHEMATIC DESIGN SUBMISSION SET

Client

HEATHERWOOD LUXURY RENTALS
58 Motor Parkway, Suite 100
Commack, NY 11725
T 631 775 2247 F 631 396 2185

ARCHITECT
HILL | WEST ARCHITECTS
11 BROADWAY
17TH FLOOR
NEW YORK, NY 10004
T. 212 213 8007 F. 212 686 1754

INTERIOR DESIGNER
IN-SITE Interior Design, Inc.
845 Third Avenue, 6th Floor
New York, NY 10022
Tel: 646 290 5232 Fax: 646 290 5001

ENVIRONMENTAL ENGINEER
AKRF, INC
440 Park Avenue South
New York, NY 10016
Tel: 212 696 0670 Fax: 212 726 0942

STRUCTURAL ENGINEER
SEVERUD ASSOCIATES
469 Seventh Avenue
New York, NY 10018
Tel: 212 986 3700 Fax: 212 687 6467

MEP/FP ENGINEER
WSP | PARSONS BRINCKERHOFF
512 Seventh Avenue
New York, NY 10018
Tel: 212 532 9600 Fax: 212 689 7489

EXTERIER WALL CONSULTANT
CANY
134 West 29TH ST
New York, NY 10001
Tel: 212 414 9623 Fax: xxx xxx xxxx

VERTICAL TRANSPORTATION CONSULTANT
OTIS ELEVATOR
65 FAIRCHILD AVENUE
Plainview, NY 11803
Tel: 516 576 5974 Fax: xxx xxx xxxx

PROJECT
12 ECKFORD ST.
AKA
470 MANHATTAN AVENUE
BROOKLYN, NY

DOB BSCAN:

DOB STAMPS & SIGNATURES:

DWG TITLE
SUB-SLAB VAPOR BARRIER, SSDS, AND SVE DETAILS

NEW BUILDING # : 320909772

SEAL & SIGNATURE:

DATE: DECEMBER 11, 2019
PROJECT #: 14A21
SCALE: AS NOTED
DWG NO.: ENV-103

CAD FILE: J:\14A21_MANHATTAN AVE
SHEET OF 121

©2019 AKRF, Inc. W:\Projects\12306 - 12 ECKFORD STREET\Technical\Hazmat\Drawings\SSDS Design\Sept 2019\12306 ENV-101 and ENV-103.dwg last save: mvillaca 12/13/2019 2:00 PM

Grace Construction Products Ltd

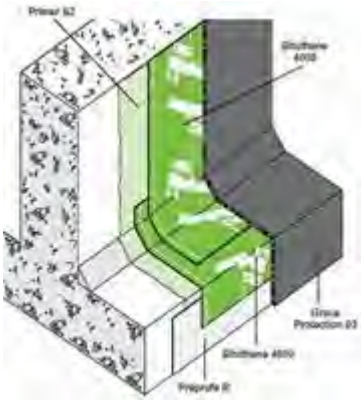

Bituthene® 4000

By Grace Construction Products Ltd

Detailed description

A flexible preformed cold applied waterproof membrane combining a high performance cross-laminated, HDPE carrier film with a unique super-sticky self-adhesive rubber bitumen compound.
Use for protection of sub-structures in accordance with the relevant requirements of BS 8102.
Designed to be applied horizontally and vertically to protect critical sub-structures. The membrane is specially formulated to allow application to "green concrete" and may be applied in damp or marginal weather conditions with the use of a moisture tolerant primer system.

Substrate:

Monolithic concrete blinding is preferred which should be regular, smooth and free of loose aggregate and sharp protrusions. Ensure all surfaces are free from ice and frost.

Application:

Brush the membrane onto the surface to ensure good initial bond and exclude air. On high walls it may be necessary to batten fix the membrane to prevent slippage.

Joint laps:

Minimum laps of 50 mm are recommended.

Product guidance - As Standard

Thickness:

1.5 mm.

Primer:

Servicised® B2 bituminous primer is moisture tolerant and can be used on 'green' concrete or damp to touch substrates.

Options

Continuity sealant:

Bituthene® LM is a high performance liquid membrane providing waterproof continuity at angles and for detailing terminations at pile caps and pipe penetrations.

Product specification

Manufacturer

- Name: Grace Construction Products Ltd

- Web: www.graceconstruction.com
- Email: uksales@grace.com
- Tel: +44 (0)1753 490000
- Fax: +44 (0)1753 490001
- Address: 580 Ipswich Road,Slough,Berkshire SL1 4EQ

Product reference	Bituthene® 4000
Primer	Servicised® B2 primer
Continuity sealant	Not required Bituthene® LM

PREPRUFE® 300R PLUS & 160R PLUS

Pre-applied waterproofing membranes that bond integrally to poured concrete for use below slabs or behind basement walls on confined sites

Description

Preprufe® 300R Plus & 160R Plus membranes are unique composite sheets comprised of a thick HDPE film, pressure sensitive adhesive and weather resistant protective coating. Designed with Advanced Bond Technology™ and a dual adhesive ZipLap™, Preprufe Plus membranes form a unique, integral bond to poured concrete, preventing both the ingress and lateral migration of water while providing a robust barrier to water, moisture and gas.

Release liner free and designed for efficient, reliable installation, the Preprufe Plus ZipLap allows for an adhesive to adhesive bond at seam overlaps and delivers superior performance in harsh conditions without the need for specialized equipment, heat or power.

The Preprufe R Plus System includes:

- **Preprufe® 300R Plus**—heavy-duty grade for use below slabs and on rafts (i.e. mud slabs). Designed to accept the placing of heavy reinforcement using conventional concrete spacers.
- **Preprufe® 160R Plus**—thinner grade for blindside, zero property line applications against soil retention systems. Vertical use only.
- **Preprufe® Tape LT**—for covering cut edges, roll ends, penetrations and detailing (temperatures between 25°F (-4°C) and 86°F (+30°C)).
- **Preprufe® Tape HC**—for covering cut edges, roll ends, penetrations and detailing (minimum 50°F (10°C)).
- **Preprufe® CJ Tape LT**— for construction joints, and detailing (termperatures between 25°F (-4°C) and 86°F (+30°C)).
- **Preprufe® CJ Tape HC**— for construction joints, and detailing (minimum 50°F (10°C)).
- **Bituthene® Liquid Membrane**—for sealing around penetrations, etc.
- **Adcor™ ES**—waterstop for joints in concrete walls and floors
- **Preprufe® Tieback Covers**—preformed cover for soil retention wall tieback heads
- **Preprufe® Preformed Corners**—preformed inside and outside corners

Preprufe® 300R Plus & 160R Plus membranes are applied either horizontally to smooth prepared concrete, carton forms or well rolled and compacted earth or crushed stone substrate; or vertically to permanent formwork or adjoining structures. Concrete is then cast directly against the adhesive side of the membranes. The specially developed Preprufe adhesive layers work together to form a continuous and integral seal to the structure.

Preprufe can be turned up the inside face of slab formwork but is not recommended for conventional twin-sided formwork on walls, etc. Use Bituthene® self-adhesive membrane or Procor® fluid-applied membrane to walls after removal of formwork for a fully bonded system to all structural surfaces.

Advantages

- **Forms a unique continuous adhesive bond to concrete poured against it**—prevents water migration and makes it unaffected by ground settlement beneath slabs
- **Fully-adhered adhesive to adhesive watertight ZipLaps** and easy to execute detailing
- **Provides a barrier to water, moisture and gas**—physically isolates the structure from the surrounding ground
- **Easy roll/kick out installation**—reduces installation time and cost
- **Release liner free**—expedites installation and reduces construction site waste
- **Solar reflective**—reduced temperature gain
- **Simple and quick to install**—requiring no priming or fillets
- **Can be applied to permanent formwork**—allows maximum use of confined sites
- **Self protecting**—can be trafficked immediately after application and ready for immediate placing of reinforcement

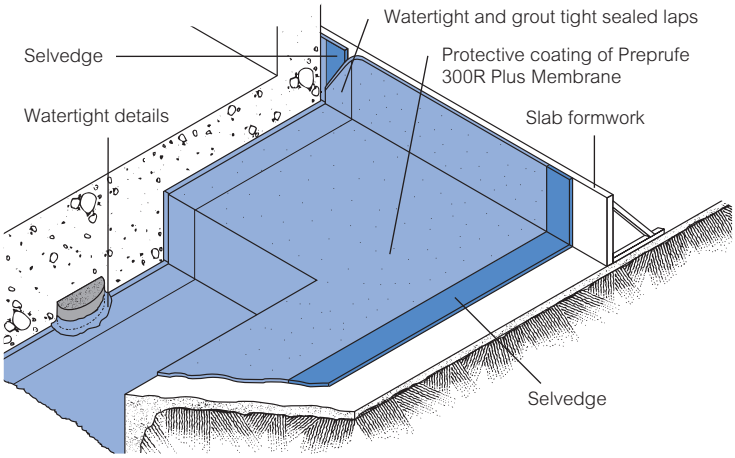

Drawings are for illustration purposes only.
Please refer to graceconstruction.com for specific application details.

- **Unaffected by wet conditions**—cannot activate prematurely
- **Inherently waterproof, non-reactive system:**
  - not reliant on confining pressures or hydration
  - unaffected by freeze/thaw, wet/dry cycling
- **Chemical resistant**—effective in most types of soils and waters, protects structure from salt or sulphate attack

Installation

The most current application instructions, detail drawings and technical letters can be viewed at graceconstruction.com. For other technical information contact your local Grace representative.

Preprufe® Plus membranes have colored zip strips at the top and bottom of the seam area on the edge of the roll. Both zip strips cover an aggressive adhesive. Once the yellow zip strip on the top of the membrane and the blue zip strip on the bottom of the membrane are removed, a strong adhesive to adhesive bond is achieved in the overlap area. This Preprufe® ZipLap™ provides an enhanced sealing of the overlaps in harsh conditions combined with a fast and easy way of execution without specialized equipment, heat or power.

Substrate Preparation

All surfaces—It is essential to create a sound and solid substrate to eliminate movement during the concrete pour. Substrates must be regular and smooth with no gaps or voids greater than 0.5 in. (12 mm). Grout around all penetrations such as utility conduits, etc. for stability (see Figure 1).

Horizontal—The substrate must be free of loose aggregate and sharp protrusions. Avoid curved or rounded substrates. When installing over earth or crushed stone, ensure substrate is well compacted to avoid displacement of substrate due to traffic or concrete pour. The surface does not need to be dry, but standing water must be removed.

Vertical—Use concrete, plywood, insulation or other approved facing to sheet piling to provide support to the membrane. Board systems such as timber lagging must be close butted to provide support and not more than 0.5 in. (12 mm) out of alignment.

Membrane Installation

Preprufe® Plus membranes can be applied at temperatures of 25°F (-4°C) or above. When installing Preprufe Plus product in cold or marginal weather conditions <40°F (<4°C) the use of Preprufe Tape LT is recommended at all laps and detailing. Preprufe Tape LT should be applied to clean, dry surfaces and the release liner must be removed immediately after application. Alternatively, Preprufe Plus Low Temperature (LT) membrane is available for low temperature applications. Refer to Preprufe Plus LT data sheet and Grace Tech Letter 16 for more information.

Horizontal substrates—Kick out or roll out the membrane HDPE film side to the substrate with the yellow zip strip facing towards the concrete pour. End laps should be staggered to avoid a build up of layers. Leave yellow and blue zip strips on the membrane until overlap procedure is completed.

Accurately position succeeding sheets to overlap the previous sheet 3 in. (75 mm) along the marked selvedge with the blue zip strip on top of the yellow zip strip. Ensure the underside of the succeeding sheet is clean, dry and free from contamination before attempting to overlap. Peel back and remove both the yellow and blue zip strips in the overlap area to achieve an adhesive to adhesive bond at the overlap. Ensure a continuous bond is achieved without creases and roll firmly with a heavy roller.

Refer to Grace Tech Letter 15 for information on suitable rebar chairs for Preprufe products.

Vertical substrates—Mechanically fasten the membrane vertically using fasteners appropriate for the substrate with the yellow zip strip facing towards the concrete pour. The membrane may be installed in any convenient length. Fastening can be made through the selvedge using a small and low profile head fastener so that the membrane lays flat and allows firmly rolled overlaps. Accurately position succeeding sheets to overlap the previous sheet 3 in. (75 mm) along the marked selvedge with the blue zip strip on top of the yellow zip strip.

Ensure the underside of the succeeding sheet is clean, dry and free from contamination before attempting to overlap. Peel back and remove both the yellow and blue zip strips in the overlap area to achieve an adhesive to adhesive bond at the overlap. Roll firmly to ensure a watertight seal.

Roll ends and cut edges—Overlap all roll ends and cut edges by a minimum 3 in. (75 mm) and ensure the area is clean and free from contamination, wiping with a damp cloth if necessary. Allow to dry and apply Preprufe Tape LT (or HC in hot climates) centered over the lap edges and roll firmly (see Figure 2). Immediately remove tinted plastic release liner from the tape.

Figure 1

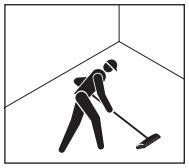

Figure 2

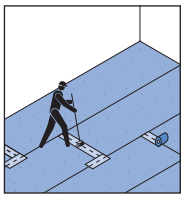

Details

Detail drawings are available at graceconstruction.com.

Membrane Repair

Inspect the membrane before installation of reinforcement steel, formwork and final placement of concrete. The membrane can be easily cleaned by power washing if required. Repair damage by wiping the area with a damp cloth to ensure the area is clean and free from dust, and allow to dry. Repair small punctures (0.5 in. (12 mm) or less) and slices by applying Preprufe Tape centered over the damaged area. Repair holes and large punctures by applying a patch of Preprufe® Plus membrane, which extends 6 in. (150 mm) beyond the damaged area. Seal all edges of the patch with Preprufe Tape. Any areas of damaged adhesive should be covered with Preprufe Tape. Where exposed selvedge has lost adhesion or laps have not been sealed, ensure the area is clean and dry and cover with fresh Preprufe Tape. All Preprufe Tape must be rolled firmly and the tinted release liner removed. Alternatively, use a hot air gun or similar to activate the adhesive using caution not to damage the membranes and firmly roll lap to achieve continuity.

Pouring of Concrete

Ensure the plastic release liner is removed from all areas of Preprufe® Tape.

It is recommended that concrete be poured within 56 days (42 days in hot climates) of application of the membrane. Following proper ACI guidelines, concrete must be placed carefully and consolidated properly to avoid damage to the membrane. Never use a sharp object to consolidate the concrete. Provide temporary protection from concrete over splash for areas of the Preprufe membrane that are adjacent to a concrete pour.

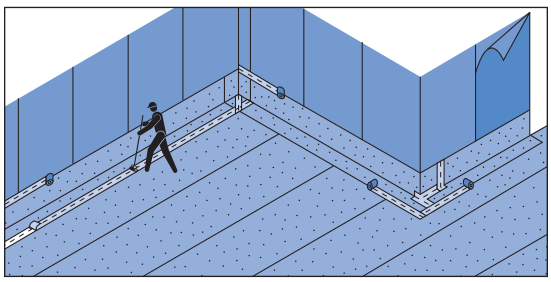

Detail Drawings

Details shown are typical illustrations and not working details. For a list of the most current details, visit us at graceconstruction.com.
For technical assistance with detailing and problem solving please call toll free at
866-333-3SBM (3726).

Wall base detail against permanent shutter

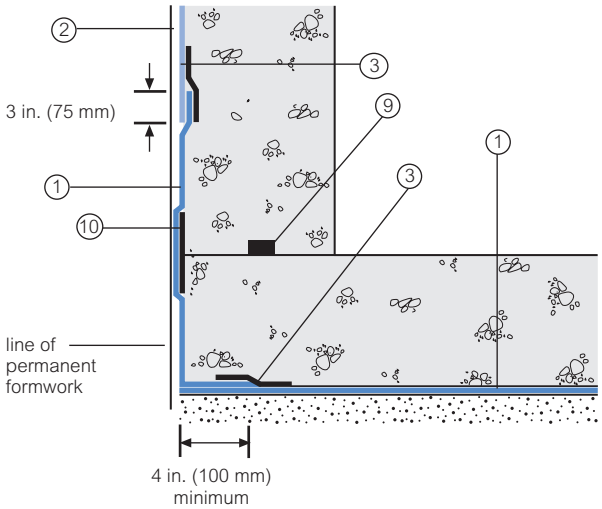

Bituthene® wall base detail (Option 1)

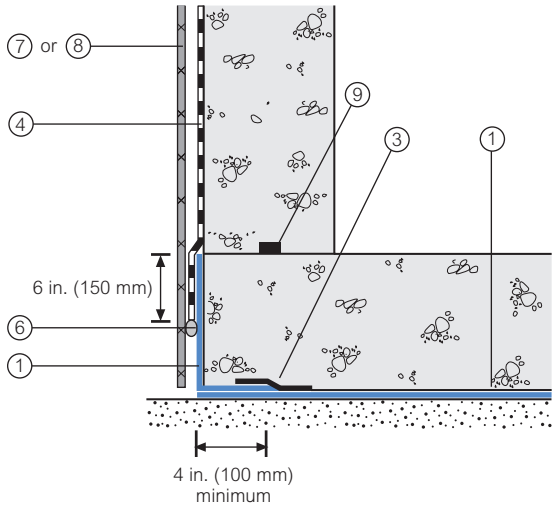

Procor® wall base detail (Option 1)

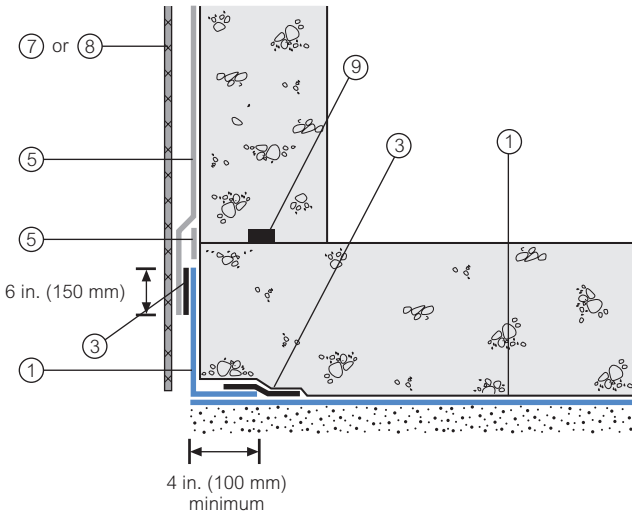

Bituthene® wall base detail (Option 2)

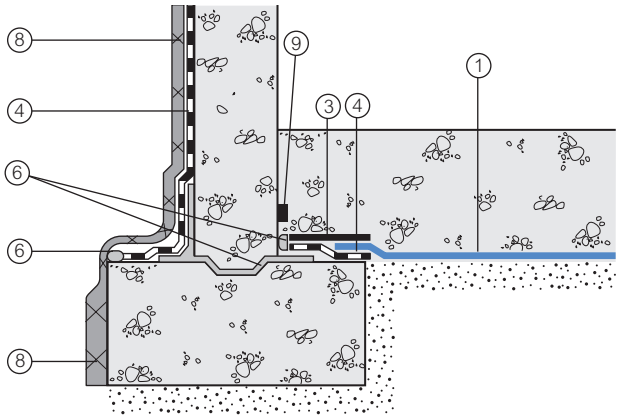

Procor® wall base detail (Option 2)

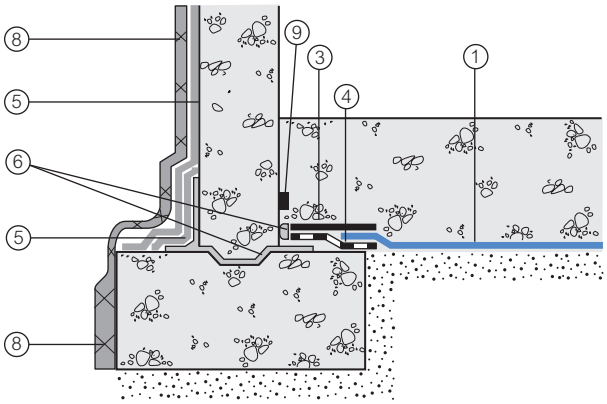

1 **Preprufe® 300R Plus**
2 **Preprufe® 160R Plus**
3 **Preprufe® Tape**
4 **Bituthene®**
5 **Procor®**
6 **Bituthene® Liquid Membrane**
7 **Approved Protection Course**
8 **Hydroduct®**
9 **Adcor™ ES**
10 **Preprufe® CJ Tape**

Supply

Dimensions (Nominal)	Preprufe 300R Plus Membrane	Preprufe 160R Plus Membrane	Preprufe Tape (LT or HC*)
Thickness	0.046 in. (1.2 mm)	0.032 in. (0.8 mm)	
Roll size	3 ft. 10 in. x 102 ft. (1.17m x 31.15m)	3 ft. 10 in. x 120 ft. (1.17m x 36.6m)	4 in. x 49 ft (100 mm x 15 m)
Roll area	392 ft^2 (36 m^2)	460 ft^2 (42 m^2)	
Roll weight	108 lbs (50 kg)	92 lbs (42 kg)	4.3 lbs (2 kg)
Minimum side/end laps	3 in. (75 mm)	3 in. (75 mm)	3 in. (75 mm)

Physical Properties

Property	Typical Value 300R Plus	Typical Value 160R Plus	Test Method
Color	white	white	
Thickness	0.046 in. (1.2 mm)	0.032 in. (0.8 mm)	ASTM D3767
Lateral Water Migration Resistance	Pass at 231 ft (71 m) of hydrostatic head pressure	Pass at 231 ft (71 m) of hydrostatic head pressure	ASTM D5385, modified[1]
Low temperature flexibility	Unaffected at -20°F (-29°C)	Unaffected at -20°F (-29°C)	ASTM D1970
Resistance to hydrostatic head	231 ft (71 m)	231 ft (71 m)	ASTM D5385, modified[2]
Elongation	500%	500%	ASTM D412, modified[3]
Tensile strength, film	4000 psi (27.6 MPa)	4000 psi (27.6 MPa)	ASTM D412
Crack cycling at -9.4°F (-23°C), 100 cycles	Unaffected, Pass	Unaffected, Pass	ASTM C836[4]
Puncture resistance	221 lbs (990 N)	100 lbs (445 N)	ASTM E154
Peel adhesion to concrete	5 lbs/in. (880 N/m)	5 lbs/in. (880 N/m)	ASTM D903, modified[5]
Lap peel adhesion at 72°F (22°C)	8 lbs/in. (1408 N/m)	8 lbs/in. (1408 N/m)	ASTM D1876, modified[6]
Lap peel adhesion at 40°F (4°C)	8 lbs/in. (1408 N/m)	8 lbs/in. (1408 N/m)	ASTM D1876, modified[6]
Permeance to water vapor transmission	0.01 perms (0.6 ng/(Pa x s x m^2))	0.01 perms (0.6 ng/(Pa x s x m^2))	ASTM E96, method B

Footnotes:

1. Lateral water migration resistance is tested by casting concrete against membrane with a hole and subjecting the membrane to hydrostatic head pressure with water. The test measures the resistance of lateral water migration between the concrete and the membrane.
2. Hydrostatic head tests of Preprufe Membranes are performed by casting concrete against the membrane with a lap. Before the concrete cures, a 0.125 in. (3 mm) spacer is inserted perpendicular to the membrane to create a gap. The cured block is placed in a chamber where water is introduced to the membrane surface up to the head indicated.
3. Elongation of membrane is run at a rate of 2 in. (50 mm) per minute.
4. Concrete is cast against the Preprufe membrane and allowed to cure (7 days minimum)
5. Concrete is cast against the protective coating surface of the membrane and allowed to properly dry (7 days minimum). Peel adhesion of membrane to concrete is measured at a rate of 2 in. (50 mm) per minute at room temperature.
6. The test is conducted 15 minutes after the lap is formed (per Grace published recommendations) and run at a rate of 2 in. (50 mm) per minute at 72°F (22°C).

Removal of Formwork

Preprufe® membranes can be applied to removable formwork, such as slab perimeters, elevator and lift pits, etc. Once the concrete is poured the formwork must remain in place until the concrete has gained sufficient compressive strength to develop the surface bond. Preprufe membranes are not recommended for conventional twin-sided wall forming systems, see Grace Tech Letter 13 for information on forming systems used with Preprufe products.

A minimum concrete compressive strength of 3000 psi (20 N/mm^2) is recommended prior to stripping formwork supporting Preprufe membranes. Premature stripping may result in displacement of the membrane and/or spalling of the concrete.

Refer to Grace Tech Letter 17 for information on removal of formwork for Preprufe products.

Specification Clauses

Preprufe® 300R Plus or 160R Plus membranes shall be applied with its protective coating presented to receive fresh concrete to which it will integrally bond. Only Grace Construction Products approved membranes shall be bonded to Preprufe® products. All Preprufe system materials shall be supplied by Grace Construction Products, and applied strictly in accordance with their instructions. Specimen performance and formatted clauses are also available.

NOTE: Use Preprufe Tape to tie-in Procor® fluid-applied membrane with Preprufe product.

Health and Safety

Refer to relevant Material Safety data sheet. Complete rolls should be lifted and carried by a minimum of two persons.

www.graceconstruction.com

For technical assistance call toll free at 866-333-3SBM (3726)

Preprufe, Bituthene and Hydroduct are trademarks, registered in the United States and/or other countries, of W. R. Grace & Co.-Conn. Adcor is a trademark of W.R. Grace& Co.-Conn. Procor is a U.S. registered trademark of W. R. Grace & Co. -Conn., and is used in Canada under license from PROCOR LIMITED. This trademark list has been compiled using available published information as of the publication date of this brochure and may not accurately reflect current trademark ownership or status. Grace Construction Products is a business segment of W. R. Grace & Co.-Conn. © Copyright 2014 W. R. Grace& Co.-Conn. All rights reserved.

We hope the information here will be helpful. It is based on data and knowledge considered to be true and accurate and is offered for the users' consideration, investigation and verification, but we do not warrant the results to be obtained. Please read all statements, recommendations or suggestions in conjunction with our conditions of sale, which apply to all goods supplied by us. No statement, recommendation or suggestion is intended for any use which would infringe any patent or copyright. W. R. Grace & Co.–Conn., 62 Whittemore Avenue, Cambridge, MA 02140. In Canada, Grace Canada, Inc., 294 Clements Road, West, Ajax, Ontario, Canada L1S 3C6.

This product may be covered by patents or patents pending.

PF-189A Printed in U.S.A. 12/14 GCS/PDF

GRACE

Florprufe™ 120

Integrally bonded vapour protection for slabs on grade

Description

Florprufe™ 120 is a high performance vapour barrier with Grace's Advanced Bond Technology™ that forms a unique seal to the underside of concrete floor slabs.

Comprising a highly durable polyolefin sheet and a specially developed, non-tacky adhesive coating, Florprufe 120 seals to liquid concrete to provide integrally bonded vapour protection.

Advantages

- Forms a powerful integral seal to the underside of concrete slabs
- Protects valuable floor finishes such as wood, tiles, carpet and resilient flooring from damage by vapour transmission
- Direct contact with the slab complies with the latest industry recommendations
- Remains sealed to the slab even in cases of ground settlement
- Ultra low vapour permeability
- Durable, chemical resistant polyolefin sheet
- Lightweight, easy to apply, kick out rolls
- Simple lap forming with mechanical fixings or tape

Installation

Florprufe 120 is engineered for use below slabs on grade with moisture-impermeable or moisture-sensitive floor finishes that require the highest level of vapour protection.

Florprufe complies with the latest recommendations of ACI Committees 302 and 360, i.e. for slabs with vapour sensitive coverings, the location of the vapour barrier should always be in direct contact with the slab[1].

The membrane is loose laid onto the prepared sub-base, forming overlaps that can be either mechanically secured or taped. The unique bond of Florprufe to concrete provides continuity of vapour protection at laps. Alternatively, if a taped system is preferred, self-adhered Preprufe® Tape can be used to overband the laps.

Slab reinforcement and concrete can be placed immediately. Once the concrete is poured, an integral bond develops between the concrete and membrane.

Health & Safety

Refer to relevant Material Safety Data Sheet. Complete rolls should be handled by 2 persons.

Florprufe 120 can be applied at temperatures of -4ºC or above. Membrane installation is unaffected by wet weather. Installation and detailing of Florprufe 120 are generally in accordance with ASTM E 1643-98.

Typical Perimeter Detail

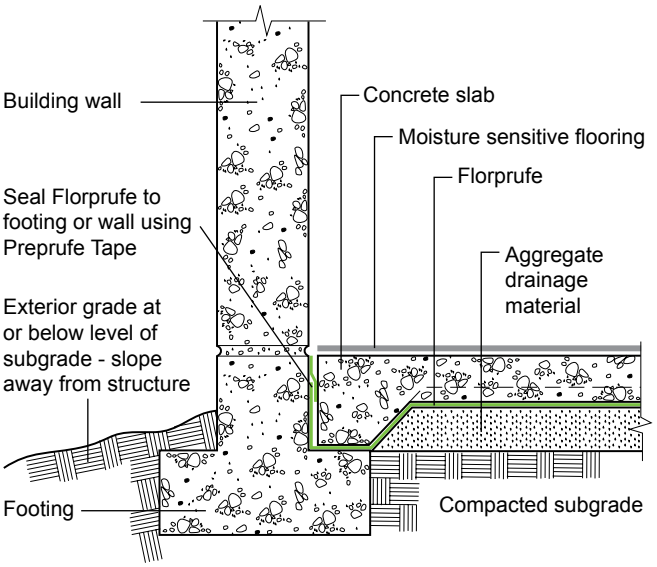

[1] ACI 302. 1R 96 Addendum

Supply

Florprufe 120

Supplied in rolls	1.2 m x 35 m
Roll area	42 m^2
Roll weight	37 kg approx.

Ancillary Products

Preprufe Tape is packaged in cartons containing 4 rolls that are 100 mm x 15 m.

Grace Liquid Membrane is supplied in 5.7 L pails.

Physical Properties

Property	Typical Values	Test Method
Colour	White	
Thicken (nominal)	0.5 mm	ASTM D 3767 Method A
Water Vapour Permeance	0.03 perms	ASTM E 96 Method B
Tensile Strength	65 lbs/in.	ASTM E 154
Elongation	300%	ASTM D 412
Puncture Resistance	3300 gms	ASTM D17091
Peel Adhesion to Concrete	>4 lbs/in.	ASTM D 903

*Test methods that comprise ASTM E1745 standard for vapour retarders.

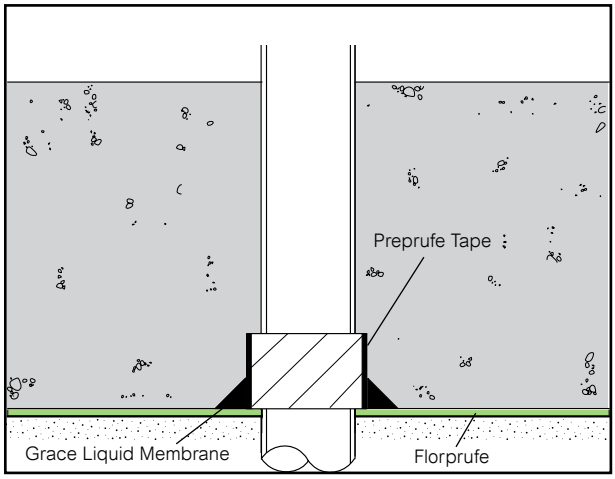

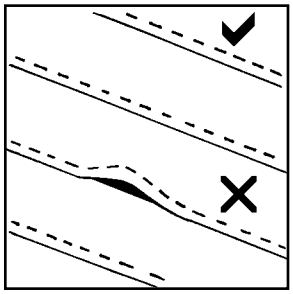

Prepare substrate in accordance with ACI 302.1R Section 4.1. Install Florprufe 120 over the leveled and compacted base. Place the membrane with the adhesive coated side facing towards the concrete slab. Remove and discard release liner. End laps should be staggered to avoid a build up of layers. Succeeding sheets should be accurately positioned to overlap the previous sheet 50 mm along the marked lap line.

Laps

1. **Mechanical fastening method** – To prevent the membrane from moving and gaps opening, the laps should be fastened together at 1.0 m maximum centres. Fix through the centre of the lap area using 12 mm long washer-head, self-tapping, galvanized screws (or similar) and allowing the head of the screw to bed into the adhesive compound to self-seal. It is not necessary to fix the membrane to the substrate, only to itself. Ensure the membrane lays flat and no openings occur. (See Figure 1.) Additional fastening may be required at corners, details, etc. Continuity is achieved once the slab is poured and the bond to concrete develops.

OR

2. **Taped lap method** – For additional security use Grace Preprufe Tape to secure and seal the overlaps. Overband the lap with the 100 mm wide Preprufe Tape, using the lap line for alignment. Remove plastic release liner to ensure bond to concrete.

Penetrations

Mix and apply Grace Liquid Membrane liquid detailing compound to seal around penetrations such as drainage pipes, etc. (See Figure 2 and refer to the Grace Liquid Membrane data sheet.)

Concrete Placement

Place concrete within 30 days. Inspect membrane and repair any damage with patches of Preprufe Tape. Ensure all liner is removed from membrane and tape before concreting.

www.graceconstruction.com

Australia 1800 855 525 New Zealand (64-9) 448 1146 China Mainland (86-21) 5467 4678
Hong Kong (852) 2675 7898 Indonesia (62-21) 893 4260 Japan (81-3) 3537 6366 Korea (82-32) 820 0800
Malaysia (60-3) 9074 6133 Philippines (63-49) 549 7373 Singapore (65) 6265 3033 Taiwan (886-3) 427 0850
Thailand (66-2) 709 4470 Vietnam (84-8) 3710 6168

Bituthene and Servipak are the registered trademarks of W. R. Grace & Co.-Conn.

The information given is based on data and knowledge considered to be true and accurate and is offered for the user's consideration, investigation and verification. Since the conditions of use are beyond our control we do not warrant the results to be obtained. Please read all statements, recommendations or suggestions in conjunction with our conditions of sale including those limiting warranties and remedies which apply to all goods supplied by us. No statement, recommendation or suggestion is intended for any use which would violate or infringe statutory obligations or any rights belonging to a third party.

These products may be covered by patents or patents pending. Copyright 2014. W. R. Grace (S) Pte Ltd 110-FLP-38A

Printed in Singapore 02/14

GRACE

STEGO® WRAP 20-MIL VAPOR BARRIER

A STEGO INDUSTRIES, LLC INNOVATION | VAPOR RETARDERS 07 26 00, 03 30 00 | VERSION: DEC 10, 2018

1. PRODUCT NAME

STEGO WRAP 20-MIL VAPOR BARRIER

2. MANUFACTURER

Stego Industries, LLC
216 Avenida Fabricante, Suite 101
San Clemente, CA 92672 USA
Sales, Technical Assistance
Ph: (877) 464-7834
contact@stegoindustries.com
www.stegoindustries.com

3. PRODUCT DESCRIPTION

USES: Stego Wrap 20-Mil Vapor Barrier is used as a below-slab vapor barrier.

COMPOSITION: Stego Wrap 20-Mil Vapor Barrier is a multi-layer plastic extrusion manufactured with only the highest grade of prime, virgin, polyolefin resins.

ENVIRONMENTAL FACTORS: Stego Wrap 20-Mil Vapor Barrier can be used in systems for the control of soil gases (radon, methane), soil poisons (oil by-products) and sulfates.

4. TECHNICAL DATA

TABLE 4.1: PHYSICAL PROPERTIES OF STEGO WRAP 20-MIL VAPOR BARRIER

PROPERTY	TEST	RESULTS
Under Slab Vapor Retarders	ASTM E1745 Class A, B & C – Standard Specification for Water Vapor Retarders Used in Contact with Soil or Granular Fill under Concrete Slabs	Exceeds Class A, B & C
Water Vapor Permeance	ASTM F1249 – Test Method for Water Vapor Transmission Rate Through Plastic Film and Sheeting Using a Modulated Infrared Sensor	0.0071 perms
Permeance After Conditioning (ASTM E1745 Sections 7.1.2 - 7.1.5)	ASTM E154 Section 8, F1249 – Permeance after wetting, drying, and soaking ASTM E154 Section 11, F1249 – Permeance after heat conditioning ASTM E154 Section 12, F1249 – Permeance after low temperature conditioning ASTM E154 Section 13, F1249 – Permeance after soil organism exposure	0.0088 perms 0.0081 perms 0.0084 perms 0.0077 perms
Methane Transmission Rate	ASTM D1434 - Standard Test Method for Determining Gas Permeability Characteristics of Plastic Film and Sheeting	152.2 GTR* (mL(STP)/m^2*day)
Radon Diffusion Coefficient	K124/02/95	9.9 x 10^{-12} m^2/second
Puncture Resistance	ASTM D1709 – Test Method for Impact Resistance of Plastic Film by Free-Falling Dart Method	3500+ grams**
Tensile Strength	ASTM D882 – Test Method for Tensile Properties of Thin Plastic Sheeting	97.7 lbf/in
Thickness		20 mil
Roll Dimensions	width x length: area:	14' x 105' 1470 ft^2
Roll Weight		140 lb

Note: perm unit = grains/(ft^2*hr*in-Hg)
*GTR = Gas Transmission Rate
**The material maxed out the testing equipment and did not fail at 3746 grams.

Continued...
Note – legal notice on page 2.

STEGO® WRAP 20-MIL VAPOR WRAP BARRIER

A STEGO INDUSTRIES, LLC INNOVATION | VAPOR RETARDERS 07 26 00, 03 30 00 | VERSION: DEC 10, 2018

5. INSTALLATION

UNDER SLAB: Unroll Stego Wrap 20-Mil Vapor Barrier over an aggregate, sand or tamped earth base. Overlap all seams a minimum of 6 inches and tape using Stego® Tape or Stego® Crete Claw® Tape. All penetrations must be sealed using a combination of Stego Wrap and Stego Accessories.

For additional information, please refer to Stego's complete installation instructions.

6. AVAILABILITY & COST

Stego Wrap 20-Mil Vapor Barrier is available through our network of building supply distributors. For current cost information, contact your local Stego distributor or Stego Industries' Sales Representative.

7. WARRANTY

Stego Industries, LLC believes to the best of its knowledge, that specifications and recommendations herein are accurate and reliable. However, since site conditions are not within its control, Stego Industries does not guarantee results from the use of the information provided herein. Stego Industries, LLC does offer a limited warranty on Stego Wrap. Please see www.stegoindustries.com/legal.

8. MAINTENANCE

None required.

9. TECHNICAL SERVICES

Technical advice, custom CAD drawings, and additional information can be obtained by contacting Stego Industries or by visiting the website.

Contact Number: (877) 464-7834
Website: www.stegoindustries.com

10. FILING SYSTEMS

- www.stegoindustries.com

DATA SHEETS ARE SUBJECT TO CHANGE. FOR MOST CURRENT VERSION, VISIT WWW.STEGOINDUSTRIES.COM

Stego, the stegosaurus design logo[s], Crete Claw, StegoTack, StegoCrawl, Beast, and the Beast design logo are all deemed to be registered and/or protectable trademarks or service marks of Stego Industries, LLC. © 2018 Stego Industries, LLC. All Rights Reserved. Please see www.stegoindustries.com/legal.

Revision Date: July 30, 2018 | Date of Issue: February 23, 2017 | Version Number: 4.0

SECTION 1: IDENTIFICATION

Product Identifier
Product Name: Stego Wrap

Intended Use of the Product
Under-slab and below-grade water vapor barrier

Company Name, Address, and Telephone of the Responsible Party
Stego Industries, LLC
216 Avenida Fabricante #101
San Clemente, CA 92672 USA

Emergency Telephone Number
Emergency Number: 1 (800) 424-9300 (24 Hrs.) CHEMTREC
Main Contact Number: (877) 464-7834

SECTION 2: HAZARDS IDENTIFICATION

Potential Health Effects:
Hazard Information: None as defined under OSHA Hazard Communication Standard: 29 CFR Part 1910.1200.
GHS Classification: Not classified/not a dangerous substance per Globally Harmonized System of Classification and Labeling of Chemicals (GHS).
GHS Labeling: No Label elements required/not a dangerous substance per Globally Harmonized System of Classification and Labeling of chemicals (GHS).
Inhalation: Inhalation of this product is not a likely route of exposure at room temperature. In the case of critical situations (i.e. fire, overheating, or combustion) excessive inhalation of fumes may result in respiratory irritation.
Skin: This product is not likely to be hazardous by skin contact under recommended conditions of use. Molten product may cause thermal burns.
Eyes: This product is not likely to be an eye irritant under recommended conditions of use. Mechanical irritation is possible, but unlikely under recommended conditions of use. Molten product may cause thermal burns.
Ingestion: Ingestion of this product is not a likely route of exposure.
Carcinogenicity: These components are not considered to be hazardous chemicals per OSHA Hazard Communication Standard: 29 CFR Part 1910.1200. No Ingredient of this product present at levels greater than or equal to 0.1 % is identified as probable, possible or confirmed human carcinogen by IARC. No ingredient of this product present at levels greater than or equal 0.1% is identified as a known or anticipated carcinogen by NTP. No ingredient of this product present at levels greater than or equal to 0.1% is identified as a carcinogen or potential carcinogen by ACGIH.

SECTION 3: COMPOSITION / INFORMATION ON INGREDIENTS

Chemical Characterization: Polyolefins and additives. *
Description: Film made of polyolefins. **

Mixture:
Chemical Characters: Polyolefin and additives.
Hazard Information: The material is not expected to be classified as hazardous.

Continued...
Note - legal notice on page 5.

SECTION 4: FIRST AID MEASURES

The following first aid recommendations assume that appropriate personal and industrial hygiene practices are followed.

If Inhaled: This material is not likely to be hazardous by inhalation. At room temperature, the material is neither an irritant nor gives off hazardous vapor. In case of excessive inhalation of fumes due to critical situations (fire, etc.) move the person to fresh air. If symptoms persist, contact a physician.
In Case of Skin Contact: This material is not likely to be hazardous by skin contact. If molten material contacts skin, quickly cool in water, seek immediate medical attention. Do not try to peel solidified material from the skin or use solvents or thinners to dissolve it.
In Case of Eye Contact: Not likely to be an eye hazard in present form. In the case of physical contact with eyes, rinse immediately with plenty of water and seek medical advice. In case of exposure to excessive fumes due to critical situations (fire, etc.) move the person to fresh air. If symptoms persist, contact a physician.
If Wwallowed: This material is not likely to be ingested in present form. Do not induce vomiting. Seek medical advice.

SECTION 5: FIRE-FIGHTING MEASURES

Suitable Extinguishing Media: Water, Water Mist, Dry Chemical, Carbon Dioxide, and Foam. If possible water should be applied as a spray from a fogging nozzle since this is a surface burning material. Use extinguishing measures that are appropriate to local circumstances and the surrounding environment.
Specific Hazards During Fire Fighting: In its normal form, this product offers no unusual explosion hazards. See Hazardous Decomposition Products below.
Special Protective Equipment and Precaution for Fire Fighters: Use personal protective equipment. Wear self-contained breathing apparatus and chemical protective clothing for firefighting, if necessary.
Hazardous Decomposition Products: Normal combustion forms carbon dioxide, water vapor and may produce carbon monoxide, incomplete combustion products, other hydrocarbons, and hydrocarbon oxidation products depending on temperature and air availability.

SECTION 6: ACCIDENTAL RELEASE MEASURES

Personal Precautions: Collect spilled material. Danger of slipping on spilled product.
Environmental Precautions: No special measures required. Prevent product from entering drains.
Methods and Materials for Containment and Cleaning Up: Clean up promptly by physical collection, sweeping or vacuum. Recycle product or dispose of properly.

SECTION 7: HANDLING AND STORAGE

Precautions for Safe Handling: Good personal hygiene practices and employ good housekeeping. Always wash hands after handling the product. When handled in bulk quantities, this product and its associated packaging may present a crushing hazard due to the large masses involved, possibly resulting in severe injury or death. Take precautionary measures against static electricity. Minimize dust generation.
Precautions for Safe Storage: Keep in a cool, dry, well ventilated environment. Product should not be stored in excessive cold, direct sunlight or temperatures exceeding 90°F. Compliance of this policy should ensure optimum performance of this product. Store in accordance with local regulations. Materials should be stored away from heat, sources of ignition, direct sunlight, oxidizing agents and other incompatible materials. Treat as a solid that can burn.

Continued...
Note - legal notice on page 5.

SECTION 7: HANDLING AND STORAGE *Continued...*

Installation Temperature Range: Below 110°F (ambient). Please also see technical and safety data sheets for accessory products installation/application temperature ranges.
In-Service Temperature Range: Below 85°F (soil and slab temperature, beginning 28 days following slab placement). Please also see technical and safety data sheets for accessory products installation/application temperature ranges.
Exposure to Ultraviolet Radiation/Weather Events: The amount of time between when Stego Wrap is installed and when concrete is placed or other complete protection from sunlight and weather events is provided should be minimized while not exceeding 7 days.

Please review the remainder of the SDS and this wrap's technical data sheet for storage and additional information. If any of the conditions cited above pose a problem for the typical installation of Stego Wrap, please contact Stego Industries for additional information and solutions.

SECTION 8: EXPOSURE CONTROLS / PERSONAL PROTECTION

Engineering Controls: The level of protection and types of controls necessary will vary depending upon potential exposure conditions. Ventilate area to prevent accumulation of dust and fumes. Use local exhaust ventilation when routinely heat sealing this product. Ensure good ventilation at the workplace.
Exposure Limits: No applicable exposure limits available for product or components.
Personal Protection: Personal protective equipment selections vary based on potential exposure conditions such as applications, handling practices, concentration and ventilation. Information on the selection of protective equipment for use with this material is offered only based on our understanding of normal usage. User's selection of appropriate personal protective equipment should be based on an evaluation of the performance characteristics of the protective equipment relative to the task(s) to be performed, conditions present, duration of use, and the hazards and/or potential hazards that may be encountered during use.
Respiratory Protection: With proper Engineering Controls in place, no respiratory protection should be required.
Eye Protection: Use of safety glasses with side shields is good industrial practice. If contact is likely, safety glasses with side shields are recommended.
Skin Protection: Risk of skin irritation is not likely. If irritation occurs or is of concern wear disposable, protective gloves while handling this material.
Specific Hygiene Measures: Always observe good personal hygiene measures, such as washing after handling the material and before eating, drinking, using tobacco products, or using toilet facilities. Routinely wash work clothing and protective equipment to remove contaminates. Discard contaminated clothing and footwear that cannot be cleaned. Practice good housekeeping. Materials spilled on hard surface can be a serious slipping/falling hazard. Use care in walking on spilled material.
Environmental Controls: Comply with applicable environment regulations limiting discharge to air, water and soil. Protect the environment by applying appropriate control measures to prevent or limit emissions.
Occupational Exposure Limits: Consult local authorities for acceptable exposure limits.

SECTION 9: PHYSICAL AND CHEMICAL PROPERTIES

General Physical Form: Solid plastic film.

Information on Basic Physical and Chemical Properties

Appearance	Film
Physical State	Solid
Odor	Mild to no odor

Continued...
Note - legal notice on page 5.

SECTION 9: PHYSICAL AND CHEMICAL PROPERTIES *Continued...*

Odor Threshold	No data available
pH-value	Not applicable
Melting Point (C)	90-140 degrees
Freezing Point (C)	No data available
Flash Point	No data available
Flammability (solid, gas)	Not classified. Polymer will burn but does not easily ignite.
Solubility in Water	Insoluble
Auto-ignition Temp	No data available
Density	1.00-0.91 g/cc
Lower Explosion Limit	Not applicable
Upper Explosion Limit	Not applicable
Explosive Properties	No data available

SECTION 10: STABILITY AND REACTIVITY

Chemical Stability: This material is considered stable under normal ambient and anticipated storage and handling conditions.
Conditions to Avoid: Avoid elevated temperatures for prolonged periods of time, contact with strong oxidizers, sparks or open flame. Minimize dust generation and accumulation.
Materials to Avoid: Avoid contacts with strong oxidizing agents. Material product performance and/or service life may be adversely affected by some aromatic hydrocarbons or other known polymer pro-degradants.
Hazardous Decomposition Products: Material does not decompose at ambient temperature.
Hazardous Polymerization: Under normal conditions of storage and use, hazardous polymerization will not occur.

SECTION 11: TOXICOLOGICAL INFORMATION

Acute Toxicity:
Oral Toxicity: Health injuries are not known or expected under normal use. Presumed not toxic.
Inhalation Toxicity, Vapor: Health injuries are not known or expected under normal use. Presumed not toxic.
Dermal Toxicity: Health injuries are not known or expected under normal use. Presumed not toxic.
Skin Irritation: No data available. No adverse effects expected.
Eye Irritation: No data available. No adverse effects expected.
Sensitization: No data available. No adverse effects expected.
Carcinogenicity: See section 2.
Additional Toxicological Information: Contains additives that are encapsulated in the film. Under the normal conditions for use of this film the encapsulated additives are not expected to pose any health hazards per our experience and the information provided to us.

SECTION 12: ECOLOGICAL INFORMATION

Persistence and Degradability: This material is persistent in the environment. Not readily biodegradable.
Bioaccumulation: No data available. No bioaccumulation expected.
Mobility: Product is insoluble and floats on water.
Ecotoxicity (Aquatic and Terrestrial): Not expected to be harmful to aquatic or terrestrial organisms.
Biodegradability: The material is not expected to be readily biodegradable.
Other Information: Recycle material or dispose of properly.

Continued...
Note - legal notice on page 5.

Revision Date: July 30, 2018 | Date of Issue: February 23, 2017 | Version Number: 4.0

SECTION 13: DISPOSAL CONSIDERATIONS

Waste Disposal (recommendations based on product as supplied): Disposal must be in accordance with current applicable laws and regulations, and material characteristics at time of disposal. It is recommended that all waste be analyzed for compliance to applicable laws and regulations governing proper recycling and/or disposal methods and reporting requirements. Consult your local or regional authorities.

SECTION 14: TRANSPORT INFORMATION

US DOT Hazard Class: Not regulated

SECTION 15: REGULATORY INFORMATION

US Regulations:
TSCA: All components of this product are on the TSCA inventory or are exempt from listing.

SECTION 16: OTHER INFORMATION

MEDICAL APPLICATION CAUTION: Do not use this material in medical applications involving permanent implantation in the human body or permanent contact with internal body fluids or tissues.

* Article; product meets definition of an article as defined by official OSHA interpretations.

** As per paragraph (i) of OSHA Hazard Communication Standard 29 CFR Part 1910.1200, formulation is considered a trade secret and specific chemical identify and exact percentage of composition may have been withheld. Specific chemical identity and exact percentage composition will be provided to health professionals, employees, or designation representatives in accordance with applicable provisions of paragraph (i).

Disclaimer: The information contained herein only applies to the noted product. To the best of our knowledge, having been obtained through our suppliers or third parties, this information is accurate. We make no warranties, express or implied, concerning this information or the safe use of the noted product, and we disclaim liability from loss, damage, or other from the product's use, handling, or storage. Users are responsible for verifying the fitness/suitable of the product for any purposes/applications and for confirming compliance with any/all relevant codes or regulations.

Please read the Product Statements for all Stego® products by navigating here:
http://www.stegoindustries.com/legal

Stego, the stegosaurus design logo[s], Crete Claw, StegoTack, StegoCrawl, Beast, and the Beast design logo are all deemed to be registered and/or protectable trademarks or service marks of Stego Industries, LLC. © 2018 Stego Industries, LLC. All Rights Reserved. Please see www.stegoindustries.com/legal. 8/2018

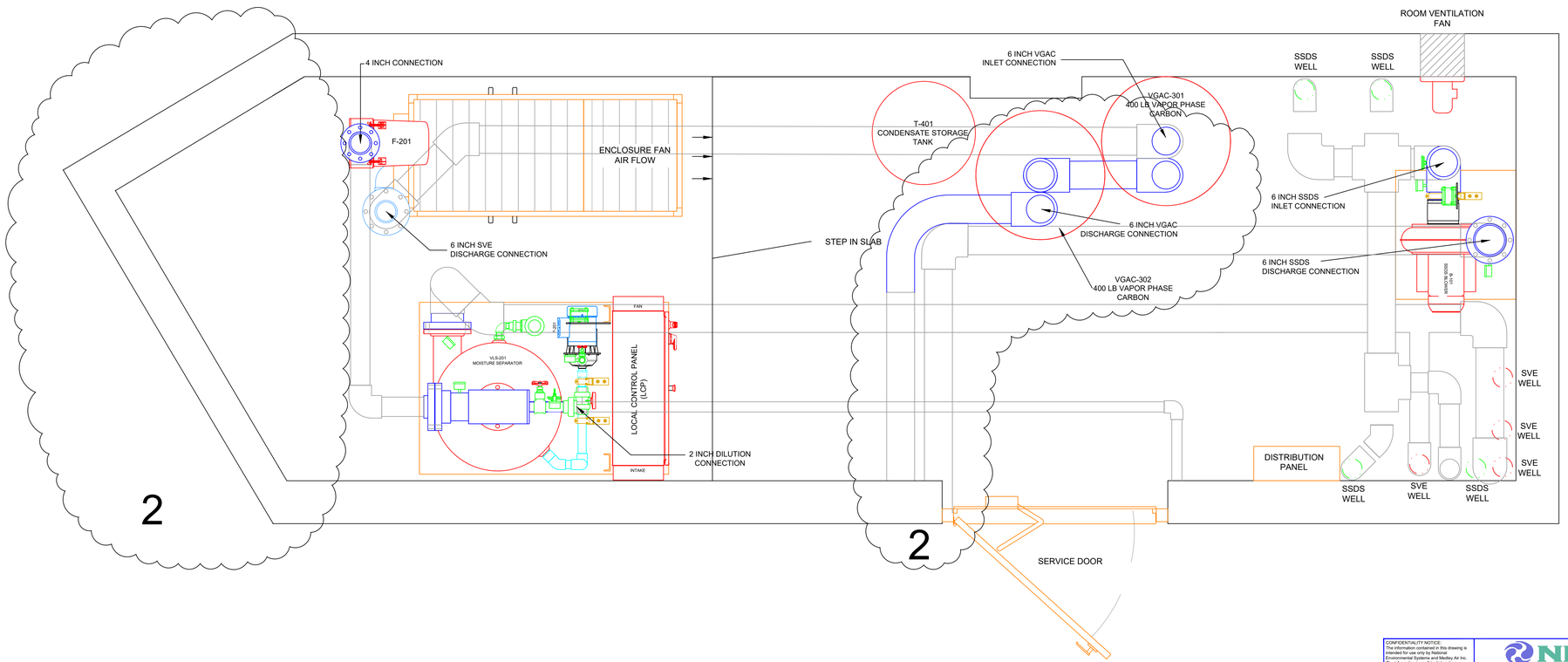

REV	DESCRIPTION	DATE	APPROVED
2	AS BUILT	12-02-19	JMT
1	REVISED PER CLIENT COMMENTS & SITE VISIT	08-09-19	CJJ
0	PRE-CONSTRUCTION / SUBMITTAL APPROVAL REQUIRED	07-26-19	CJJ

REVISIONS

CONFIDENTIALITY NOTICE
The information contained in this drawing is intended for use only by National Environmental Systems and Mosley Air Inc. Environmental Systems is not responsible for any ongoing modifications or deviation without the written consent of National Environmental Systems is STRICTLY PROHIBITED.

NES™
NATIONAL ENVIRONMENTAL SYSTEMS
84 DUNKHAM STREET | ATTLEBORO, MA 02703
508-226-1100 (Phone) / 508-226-1180 (Fax)
WWW.NES-INC.COM

TITLE: EQUIPMENT ROOM LAYOUT

DRAWN BY: CJJ DATE: 07-22-19
CHK BY: DATE:
APPR BY: DATE:

MOSLEY AIR INC.
SSDS & SVE EQUIPMENT
12 EXCELSIOR ST AKA: 470 MANHATTAN AVE - BROOKLYN, NY

JOB NO.: 19-120
SCALE: 3/4"=1' | SIZE: D | DWG NO.: M-2 | SHEET: 1 OF 3 | REV: 1

National Environmental Systems
84 Dunham Street
Attleboro, MA 02703

NES MAJOR COMPONENT SUMMARY **REV 1** AUGUST 28, 2019

PROJECT NO.: **19-120** **MEDLEY AIR / SSDS & SVE EQUIPMENT - 12 ECKFORD ST [aka 470 MANHATTAN AVE] - BROOKLYN, NY**

COMPONENT	TAG	QTY	MANUFACTURER	MODEL	SERIAL NUMBER
SECTION 1 - SUMMARY OF EQUIPMENT					
COMPONENT SUMMARY					
WARRANTY STATEMENT					
SECTION 2 - MECHANICAL DRAWINGS & TABLE(S)					
M-1, PROCESS & INSTRUMENTATION DIAGRAM (P&ID)	M-1				
T-1, INSTRUMENTATION TABLE	T-1				
M-2, EQUIPMENT ROOM LAYOUT DRAWING, PLAN VIEW	M-2				
M-3, VAPOR LIQUID SEPARATOR (VLS) DRAWING	M-3				
M-4, VLS LEVEL SWITCH DRAWING	M-4				
SECTION 3 - SSDS PROCESS EQUIPMENT					
SSDS BLOWER: 300 ACFM @ 9.5 IWC STATIC PRESSURE, AS SPECIFIED	B-101	1	IPF	CDD-200 ECO	
BLOWER MOTOR, 2 HP 208 VAC, 3-PHASE, TEFC	B-101	1			
SECTION 4 - SSDS PROCESS INSTRUMENTATION					
MANIFOLD VACUUM INDICATORS, (-)15 TO 0 IWC-V	VI-101 / 104	4	DWYER	LPG4-D7222N	
MANIFOLD PITOT TUBE FLOW ELEMENTS, 4 IN	FE-101 / 104	4	DWYER	DS-300-4	
PITOT TUBE MAG GAUGE, 0 - 0.25 IWC	FI-101 / 104	4	DWYER	2000-00	
LOW VACUUM SWITCH, 1.4-5.5 IWC, ADJUSTABLE	VSL-101	1	DWYER	1950-5-2F	
TEMPERATURE INDICATORS, 0 TO 250 F	TI-101, 102	2	AV	1NFY4	
BLOWER INLET VACUUM INDICATOR, (-)15 TO 0 IWC-V	VI-105	1	DWYER	LPG4-D7222N	
BLOWER DISCHARGE PRESSURE INDICATOR, 0-10 IWC	PI-101	1	DWYER	LPG4-D8022N	
SECTION 4 - SVE PROCESS EQUIPMENT					
SVE BLOWER: 400 ACFM @ 55 IWC ΔP AT THE BLOWER, AS SPECIFIED	B-201	1	FPZ	SCL K09-MS-10-3	
SVE BLOWER MOTOR, 10 HP 208 VAC, 3-PHASE, TEFC	B-201	1			
SVE BLOWER SOUND REDUCTION ENCLOSURE	B-201	1	FPZ	IH10	
SOUND REDUCTION ENCLOSURE VENT FAN, 115 VAC	B-201	1	FPZ	MO42	
MOISTURE SEPARATOR (MS), 120 GALLONS, 6 IN INLET, 34 FPS @ 400 ACFM	MS-201	1	NES	120 GAL	
MS TRANSFER PUMP, CENTRIFUGAL, 0.5 HP, 208VAC, 3-PHASE, 4 7/16" IMP	P-201	1	GOULDS	1ST1C9E4	
PUMP MOTOR, 1/2 HP, 208VAC, 3-PHASE, TEFC	P-201	1			
MS CONDENSATE STORAGE DRUM, 55 GAL.	T-201	1	AV	55GAL	
VACUUM RELIEF VALVE, 3 IN FNPT, ADJ, SET AT 65 IWC	VRV-201	1	FPZ	VRL8	
INLINE FILTER, 4 IN, T-STYLE	F-201	1	SOLBERG	CT-235P-400C	
DILUTION FILTER SILENCER, 2 IN	F-202	1	SOLBERG	FS-231P-200	
VAPOR PHASE CARBON VESSELS, 400LB RADIAL	VGAC-201, 202	2	TETRASOLV	VR-400	
VAPOR PHASE 4x10 REACTIVATED CARBON MEDIA	VGAC-201, 202	400LBS EACH	TETRASOLV	4 X 10 REACTIVATED	
VGAC HOSE WITH C/E CAM-LOCKS, 6 INCH, POLYURETHANE & PVC	VGAC-201, 202	[3] SECTIONS LENGTHS TBD	KURIYAMA	UF1-600	
PIPE - SCH 40 CPVC / FITTINGS SCH 80 CPVC - NES EQUIPMENT			SPEARS		
SECTION 6 - SVE PROCESS INSTRUMENTATION					
VACUUM INDICATORS, (-)100 TO 0 IWC-V	VI-201 / 204	4	DWYER	LPG4-D7722N	
MANIFOLD PITOT TUBE FLOW ELEMENTS, 4 IN	FE-201 / 204	4	DWYER	DS-300-4	
PITOT TUBE MAG GAUGES, 0 -0. 5 IWC	FI-201 / 204	4	DWYER	2000-0	
VACUUM INDICATORS, (-)100 TO 0 IWC-V	VI-205 / 208	4	DWYER	LPG4-D7722N	
TEMPERATURE INDICATORS, 0 TO 250 F	TI-201 / 204	4	AV	1NFY4	
LOW VACUUM SWITCH, 4-20 IWC ADJUSTABLE	VSL-201	1	DWYER	1950-20-2F	

National Environmental Systems
84 Dunham Street
Attleboro, MA 02703

NES MAJOR COMPONENT SUMMARY **REV 1** AUGUST 28, 2019

PROJECT NO.: **19-120** **MEDLEY AIR / SSDS & SVE EQUIPMENT - 12 ECKFORD ST [aka 470 MANHATTAN AVE] - BROOKLYN, NY**

COMPONENT	TAG	QTY	MANUFACTURER	MODEL	SERIAL NUMBER
DILUTION LINE PITOT TUBE FLOW ELEMENT, 2 IN	FE-205	1	DWYER	DS-300-2	
PITOT TUBE MAG GAUGE, 0 - 3 IWC	FI-205	1	DWYER	2003	
BLOWER DISCHARGE HIGH TEMPERATURE SWITCH, 0-225 F, ADJUSTABLE	TSH-201	1	UNITED ELECTRIC	B54-103	
PRESSURE INDICATORS, 0-25 IWC	PI-201 / 203	3	DWYER	LPG4-D8222N	
MS EMERGENCY HIGH, HIGH & LOW LEVEL SWITCH	LSHH , LSH & LSL-201	1	FPI	L500-3 POS	
MS TRANSFER PUMP PRESSURE INDICATOR, 0-60 PSI	PI-204	1	DWYER	SGY-D10422N-GF	
MS CONDENSATE STORAGE DRUM E-HIGH LEVEL SWITCH	LSHH-201	1	DWYER	F7-SS2	
SECTION 7 - ELECTRICAL DRAWINGS & TABLE(S)					
HMI SCREEN SUMMARY & REMOTE ACCESS INSTRUCTIONS					
T-2, CONTROL INTERLOCK TABLE	T-2				
I-1, CONTROL PANEL LAYOUT DRAWING	I-1				
T-3, ELECTRICAL PANEL BOM	T-3				
I-2, CONTROL PANEL WIRING DIAGRAM(S)	I-2				
T-4, NEC LOAD LIST	T-4				
E-1, LINE DIAGRAM	E-1				
T-5, VFD SETTING TABLE	T-5				
SECTION 8 - CONTROL PANEL COMPONENTS					
ENCLOSURE NEMA4 42 X 30 X 12 - MILD STEEL/LIGHT GRAY	ENCL	1	SAGINAW	SCE-42EL3012LP	
BACK-PANEL 42 X 30 MILD STEEL/WHT	ENCL	1	SAGINAW	SCE-42P30	
MOUNTING FEET SET OF 4 - ZINC PLATED	ENCL	1	SAGINAW	SCE-ELMFK4	
PANEL WING-KNOB PAD-LOCKING HANDLE BLACK	ENCL	2	SAGINAW	SCE-PLWKB	
NON-FUSED THROUGH DOOR DISCONNECT 3-PHASE 80 AMP	MDS	1	ABB	OT80F3	
NON-FUSED THROUGH DOOR DISCONNECT SHAFT 13 IN	MDS	1	ABB	OXS6X330	
NON-FUSED THROUGH DOOR DISCONNECT HANDLE NEMA3R	MDS	1	ABB	OHBS2AJ	
POWER DISTRIBUTION BLOCK 175 AMP 3-POLE 600 VAC	DB	1	SQUARE D	9080-LBA362104	
COVER DISTRIBUTION BLOCK 3-POLE	DB	1	SQUARE D	9080-LB23	
DISTRIBUTION BLOCK 175 AMP 1-POLE 600 VAC	DB	1	SQUARE D	9080-LBA162104	
COVER DISTRIBUTION BLOCK 1-POLE	DB	1	SQUARE D	9080-LB21	
SSD CIRCUIT BREAKER 15 AMPS 3-POLE 208/240 VAC	CB	1	SQUARE D	QOU315	
SVE CIRCUIT BREAKER 60 AMPS 3-POLE 208/240 VAC	CB	1	SQUARE D	QOU360	
MS PUMP CIRCUIT BREAKER 15 AMPS 3-POLE 208/240 VAC	CB	1	SQUARE D	QOU315	
SVE ENCLOSURE VENT FAN CIRCUIT BREAKER 15 AMPS 1-POLE 208/240 VAC	CB	1	SQUARE D	QOU115	
SSD BLOWER VFD 2 HP 7 AMP 230V 3-PHASE	VFD	1	ADI	GS3-22PO	
SVE BLOWER VFD 10 HP 33 AMP 230V 3-PHASE	VFD	1	ADI	GS3-2010	
GS3 VFD FLUSH MOUNT BEZEL FOR KEYPAD	VFD	2	ADI	GS3-BZL	
DURAPULSE REMOTE VFD KEYPAD CABLE 9.9 FT	VFD	2	ADI	GS-CBL2-3L	
ETHERNET MODULE 100Mbps FOR GS SERIES AC DRIVES	VFD	2	ADI	GS-EDRV100	
RELAY DPDT 120VAC W/INDICATOR LIGHT	CR	2	IDEC	RH2B-UL-AC120V	
SOCKET DIN RAIL/SURFACE 8-BLADE FOR RH2B	CR	2	IDEC	SH2B-05	
POWER SUPPLY, 24VDC, 5A, 120W DIN MOUNT, 85-264VAC, 105-260VDC INPUT	PS	1	IDEC	PS5R-VF24	
5-PORT ETHERNET SWITCH UN-MANAGED	ESW	1	MOXA	EDS-205	
4G WIRELESS MODEM / GATEWAY EVDO - VERIZON	CM	1	SIERRA WIRELESS	ES450 / AL-1102383	
SIERRA WIRELESS AIRLINK DC POWER AND I/O CABLE - ES/GX/LS/MP/RV	CM	1	SIERRA WIRELESS	AL-2000522	
MULTI-BAND 3G-4G-LTE 3 TO 5 DBI OMNI-DIRECTIONAL ANTENNA, 10 FT CABLE	CM	1	PROXICAST	ANT-121-002	

National Environmental Systems
84 Dunham Street
Attleboro, MA 02703

NES MAJOR COMPONENT SUMMARY **REV 1** AUGUST 28, 2019

PROJECT NO.: **19-120** **MEDLEY AIR / SSDS & SVE EQUIPMENT - 12 ECKFORD ST [aka 470 MANHATTAN AVE] - BROOKLYN, NY**

COMPONENT	TAG	QTY	MANUFACTURER	MODEL	SERIAL NUMBER
UPS, 600VA, 420W, 120 VAC, 4 UPS & SURGE & 4 SURGE ONLY	UPS	1	CYBERPOWER	CP600LCD	
C-MORE TOUCH PANEL 8 IN COLOR TFT ETHERNET & USB	HMI	1	ADI	EA9-T8CL	
C-MORE CABLE PANEL TO ADI PLC RJ12 PORT 10 FT RS232	HMI	1	ADI	EA-2CBL	
C-MORE AC DC POWER ADAPTER FOR EA7 & EA9	HMI	1	ADI	EA-AC	
HMI MEMORY CARD 8 GB NON-VOLATILE DATA STORAGE	HMI	1	SANDISK	SDSDB008GAW46	
4-SLOT I/O BASE FOR P2000	PLC	1	ADI	P2-04B	
POWER SUPPLY 100-240VAC FOR P2000 PLC	PLC	1	ADI	P2-01AC	
CPU 266 MHz PROCESSOR 50MB MEMORY WITH MICRO SD CARD SLOT FOR P2000	PLC	1	ADI	P2-550	
16PT 12-24VDC INPUT SINK/SOURCE FOR P2000 PAC	PLC	1	ADI	P2-16ND3-1	
16PT RELAY OUTPUT SPST 6-27VDC / 6-240VAC FOR P2000	PLC	1	ADI	P2-16TR	
TERMINAL BLOCK FOR ALL 8 & 16 POINT I/O MODULES FOR P2000 PAC	PLC	2	ADI	P2-RTB	
FILLER MODULE FOR P2000 PAC	PLC	2	ADI	P2-FILL	
MULBERRY 1-GANG, DUPLEX DEVICE RECEPTACLE WALLPLATE	SR	1	MULBERRY	MUL97101	
DUPLEX RECEPTACLE, RESIDENTIAL GRADE, 15A, 125V, NEMA 5-15R	SR	1	PASS & SEYMOUR	PAS3232-BK	
1-GANG WEATHERPROOF RECEPT. BOX	SR	1	RED DOT	IHD3- 1	
TRANSFER PUMP MOTOR STARTER CONTACTOR 3PST-NO 120VAC 20A DIN RAIL	M	1	SQUARE D	LC1D09G7	
MOTOR STARTER OVERLOAD RELAY, 3-PHASE, 1.6 - 2.5 AMP	M	1	SQUARE D	LRD07	
CONTROL POWER CIRCUIT BREAKER 6A 1-POLE 120/240 VAC	CB	1	SQUARE D	MG24430	
2 POS SELECTOR SWITCH ILLUM. GREEN MAINTAINED	SW	1	SQUARE D	ZB5AK1233	
MOUNTING BASE120V GREEN PROTECTED LED	LT	1	SQUARE D	ZB5AVG3	
PUSH BUTTON OPERATOR NON-ILLUM BLACK	PB	1	SQUARE D	ZB5AA2	
E-STOP MUSHROOM SWITCH RED TRIGGER ACTION - TURN TO RELEASE	ESTOP	2	SQUARE D	ZB5AS844	
MOUNTING COLLAR LATCH PB	PB	2	SQUARE D	ZB5AZ009	
CONTACT BLOCK 1-N.O. SCREW CLAMP	PB	2	SQUARE D	ZBE101	
CONTACT BLOCK 1-N.C. SCREW CLAMP	PB	1	SQUARE D	ZBE102	
PILOT LIGHT HEAD RED LED	LT	2	SQUARE D	ZB5AV043	
MOUNTING BASE 120V RED PROTECTED LED	LT	2	SQUARE D	ZB5AVG4	
PILOT LIGHT HEAD - YELLOW	LT	1	SQUARE D	ZB5AV053	
MOUNTING BASE120V YELLOW PROTECTED LED	SW	1	SQUARE D	ZB5AVG5	
TERMINAL BLOCK END ANCHORS	TB	4	SQUARE D	NSYTRAABV35	
TERMINAL BLOCK SCREW CLAMP 20 AMP 600 V GRAY	TB	40	SQUARE D	NSYTRV22	
TERMINAL BLOCK GROUND SCREW CLAMP 20 AMP 600 V GREEN	TB	5	SQUARE D	NSYTRV22PE	
TERMINAL BLOCK END BARRIERS GRAY	TB	2	SQUARE D	NSYTRAC22	
LEGEND PLATE HOLDER	PB	5	SQUARE D	ZBZ33	
BLANK PLATE LARGE BLACK/RED	PB	8	SQUARE D	ZBY5101	
LOAD CENTER GROUND BAR 15 TERMINALS	GB	1	SQUARE D	PK15GTA	

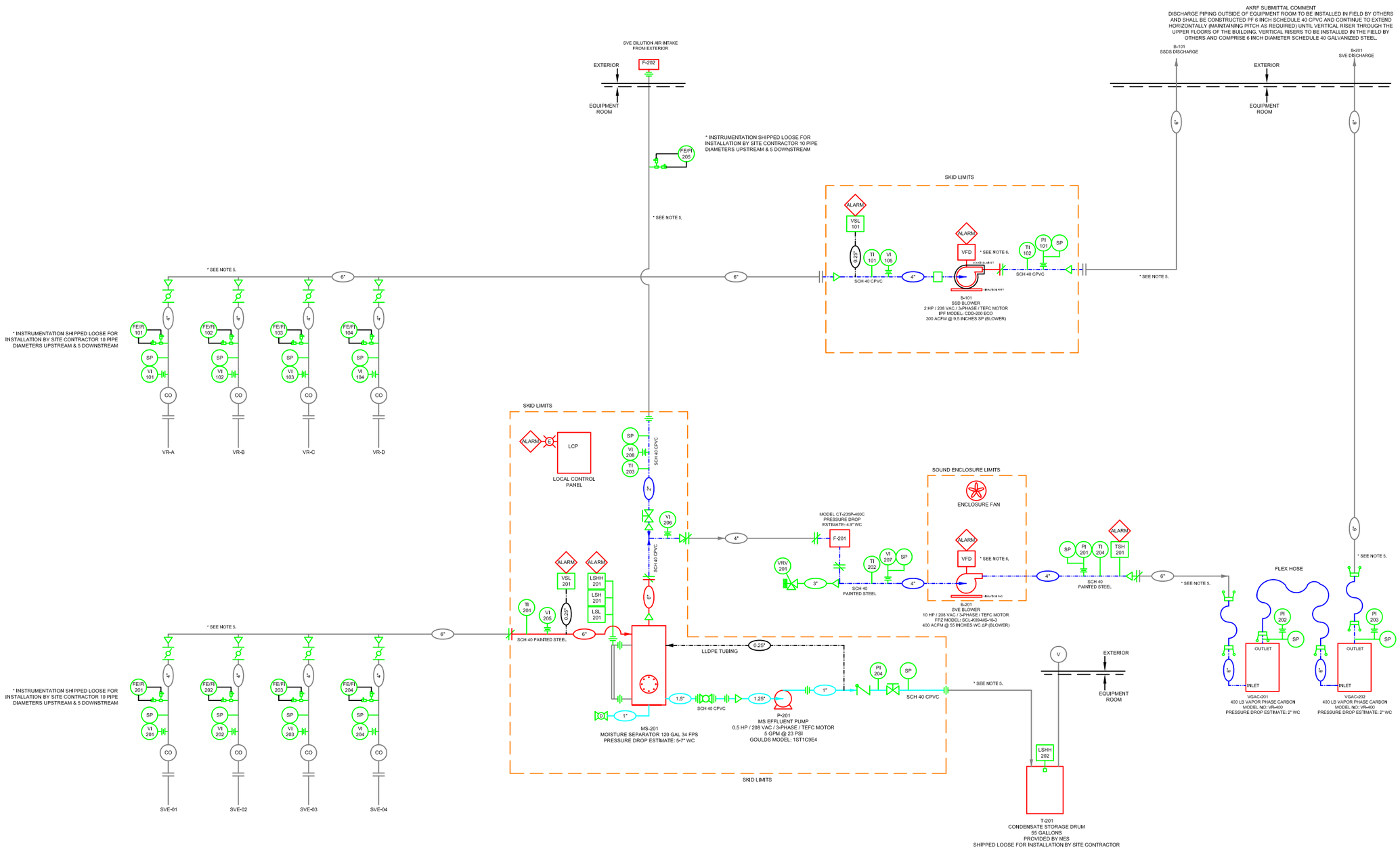

NOTES:

1. PROCESS & INSTRUMENTATION DIAGRAM IS A REPRESENTATIVE DRAWING SHOWING EQUIPMENT SPECIFICATIONS, PROCESS PIPING, VALVES AND INSTRUMENTATION NOT TO BE INTERPRETED AS A LAYOUT DRAWING DEPICTING PLUMBING LOCATION, CONNECTIONS, OR FITTINGS.
2. NEC ELECTRICAL CLASSIFICATION.
   - SSDS, SVE & CONTROL PANEL ARE DESIGNED FOR PLACEMENT IN A NON HAZARDOUS LOCATION.
3. REFER TO TABLE 1 FOR INSTRUMENTATION LIST.
4. REFER TO TABLE 2 FOR CONTROL INTERLOCKS.
5. SITE CONTRACTOR RESPONSIBLE FOR SUPPLYING AND INSTALLING FIELD / PIPING CONNECTIONS BETWEEN EQUIPMENT / SKID ASSEMBLIES
6. BLOWER MOTOR VFDS LOCATED IN SKID MOUNTED CONTROL PANEL.
7. SITE CONTRACTOR RESPONSIBLE FOR SUPPLYING AND INSTALLING INTERCONNECTING CONDUIT AND WIRING TO AND FROM LOCAL CONTROL PANEL TO EQUIPMENT, INSTRUMENTATION AND REMOTE DISCONNECTS / PANELS.

REV	DESCRIPTION	DATE	APPROVED
2	UPDATES FOR SUBMITTAL REVIEW COMMENTS PIPE / HOSE, PRESSURE DROPS, AKRF SPECIFIC COMMENT	08-28-19	CJJ
1	UPDATES FOR SUBMITTAL / APPROVAL REQUIRED	08-14-19	RB
0	PRE-CONSTRUCTION / DRAWING APPROVAL REQUIRED	07-23-19	CJJ

CONFIDENTIALITY NOTICE:
The information contained in this drawing is intended for use only by National Environmental Systems and Medley Air Inc. The information is confidential and any copying, distribution or dissemination without the written consent of National Environmental Systems is STRICTLY PROHIBITED.

NES™
NATIONAL ENVIRONMENTAL SYSTEMS
84 DUNHAM STREET / ATTLEBORO, MA 02703
508-226-1100 (Phone) / 508-226-1180 (Fax)
WWW.NES-INC.COM

DRWN BY: CJJ	DATE: 07-22-19	TITLE: PROCESS AND INSTRUMENTATION DIAGRAM	
CHK BY: XXX	DATE: XX-XX-XX	MEDLEY AIR / SSDS & SVE EQUIPMENT 12 ECKFORD ST [aka 470 MANHATTAN AVE] - BROOKLYN, NY	JOB NO. 19-120
APPR BY: XXX	DATE: XX-XX-XX	SCALE: NTS / SIZE: D / DWG NO. M-1	SHEET 1 OF 2 / REV 2

INSTRUMENT IDENTIFICATION

INSTRUMENT TYPE INSTRUMENT DESIGNATION	XX XXX	LOCALLY MOUNTED INSTRUMENT W / REMOTE DISPLAY
INSTRUMENT TYPE INSTRUMENT DESIGNATION	XX XXX	LOCALLY MOUNTED INSTRUMENT W / DISPLAY
INSTRUMENT TYPE INSTRUMENT DESIGNATION	XX XXX	LOCALLY MOUNTED SWITCH

INSTRUMENTATION ABBREVIATIONS

ADV	AUTOMATIC DRAIN VALVE
CC	CYCLE COUNTER
CF	COALESCING FILTER
D	DRAIN
DB	DISTRIBUTION BOX
DPI	DIFFERENTIAL PRESSURE INDICATOR
DPT	DIFFERENTIAL PRESSURE TRANSMITTER
FE	FLOW ELEMENT
FI	FLOW INDICATOR
FIT	FLOW INDICATING TRANSMITTER
FIQ	FLOW TOTALIZER
FM	FLOW METER
FP	FLOW PORT
FS	FLOW SWITCH
FSL	FLOW SWITCH LOW
FT	FLOW TOTALIZER
LI	LEVEL INDICATOR
LIT	LEVEL INDICATING TRANSMITTER
LS	LEVEL SWITCH
LSHH	LEVEL SWITCH HIGH-HIGH
LSH	LEVEL SWITCH HIGH
LSL	LEVEL SWITCH LOW
LSLL	LEVEL SWITCH LOW-LOW
LT	LEVEL TRANSMITTER
MOV	MOTOR OPERATED VALVE
OLH	OIL LEVEL HIGH
OLL	OIL LEVEL LOW
PF	PARTICULATE FILTER
PI	PRESSURE INDICATOR
PIT	PRESSURE INDICATING TRANSMITTER
PRV	PRESSURE REGULATING/RELIEF VALVE
PS	PRESSURE SWITCH
PSH	PRESSURE SWITCH HIGH
PSL	PRESSURE SWITCH LOW
PSV	PRESSURE SAFETY VALVE
PT	PRESSURE TRANSMITTER
SP	SAMPLE PORT
SP/V	SAMPLE PORT / VENT
SV	SOLENOID VALVE
TE	TEMPERATURE ELEMENT
TI	TEMPERATURE INDICATOR
TIT	TEMPERATURE INDICATING TRANSMITTER
TS	TEMPERATURE SWITCH
TSH	TEMPERATURE SWITCH HIGH
TSL	TEMPERATURE SWITCH LOW
V	VENT
VFD	VARIABLE FREQUENCY DRIVE
VI	VACUUM INDICATOR
VIT	VACUUM INDICATING TRANSMITTER
VRV	VACUUM RELIEF VALVE
VS	VACUUM SWITCH
VSH	VACUUM SWITCH HIGH
VSL	VACUUM SWITCH LOW
VSV	VACUUM SAFETY VALVE

PIPE DESIGNATION

- AIR LINE
- WATER LINE
- WATER LINE HEAT TRACED AND INSULATED
- CHEMICAL LINE
- PRODUCT LINE
- VENT LINE
- CONTROL LINE
- INTRINSICALLY SAFE LINE
- ANALOG LINE
- BREAK
- FLOW DIRECTION
- X" — PIPE SIZE

SYMBOLS

- ROTAMETER
- FM XXX — FLOW METER
- FIT/FT XXX, FE XXX — FLOW METER / TRANSMITTER
- ETM — ELAPSED TIME METER
- AD — AUTO DIALER
- T — TIMER
- M — MOTOR
- A — AMP METER
- RTS — REMOTE TELEMETRY SYSTEM
- VFD — VARIABLE FREQUENCY DRIVE
- STATIC MIXER
- EXPANSION TANK
- DISCHARGE SILENCER
- DILUTION AIR FILTER
- INLET/INLINE FILTER
- MP — METERING PUMP
- ALARM — ALARM DESGINATION
- WARN — WARNING INDICATION
- X AL — ALARM LIGHT
- R — RUN LIGHT
- E — E-STOP
- MULTIFUNCTION VALVE
- INJECT NOZZLE
- METERING PUMP INLET CHECK VALVE
- INDUSTRAIL INTERCHANGE COUPLER
- CONDUCTANCE PROBES
- COPPER COIL
- HOSE / CAP FITTING
- AUTOMATIC FILL VALVE
- DIAPHRAGM VALVE
- RUBBER (FERNCO) COUPLING

SYMBOLS CONTINUED

- FR — FILTER REGULATOR
- CF — COALESCING FILTER
- PF — PARTICULATE FILTER
- CD — AUTOMATIC CONDENSATE DRAIN
- PRESSURE REGULATOR
- GLOBE VALVE
- GATE VALVE
- TRUE UNION BALL VALVE
- BALL VALVE/DRAIN VALVE
- CHECK VALVE
- BUTTERFLY VALVE
- Y-STRAINER
- RELIEF VALVE
- NEEDLE VALVE
- SV XXX — SOLENOID VALVE - NORMALLY CLOSED
- SV XXX — SOLENOID VALVE - NORMALLY OPEN
- MOV XXX — MOTOR OPERATED BUTTERFLY VALVE
- ADV XXX — MOTOR OPERATED VALVE
- MOV XXX — 3-WAY MOTOR OPERATED VALVE
- SP — SAMPLE PORT
- V — TANK / VESSEL VENT LINE
- SIPHON BREAK
- MECHANICAL FLOAT
- PITOT TUBE
- RAIN CAP
- UNION
- PULSE-DAMPING SNUBBER
- FEMALE CAMLOCK
- MALE CAMLOCK
- SIGHT GLASS
- CLEAR PVC
- FLANGED CONNECTION
- REQUIRED FLANGED FIELD CONNECTION
- FLEX CONNECTOR
- CONCENTRIC REDUCER
- ECCENTRIC REDUCER
- VENTURI
- CO — CLEAN OUT

SYMBOLS CONTINUED

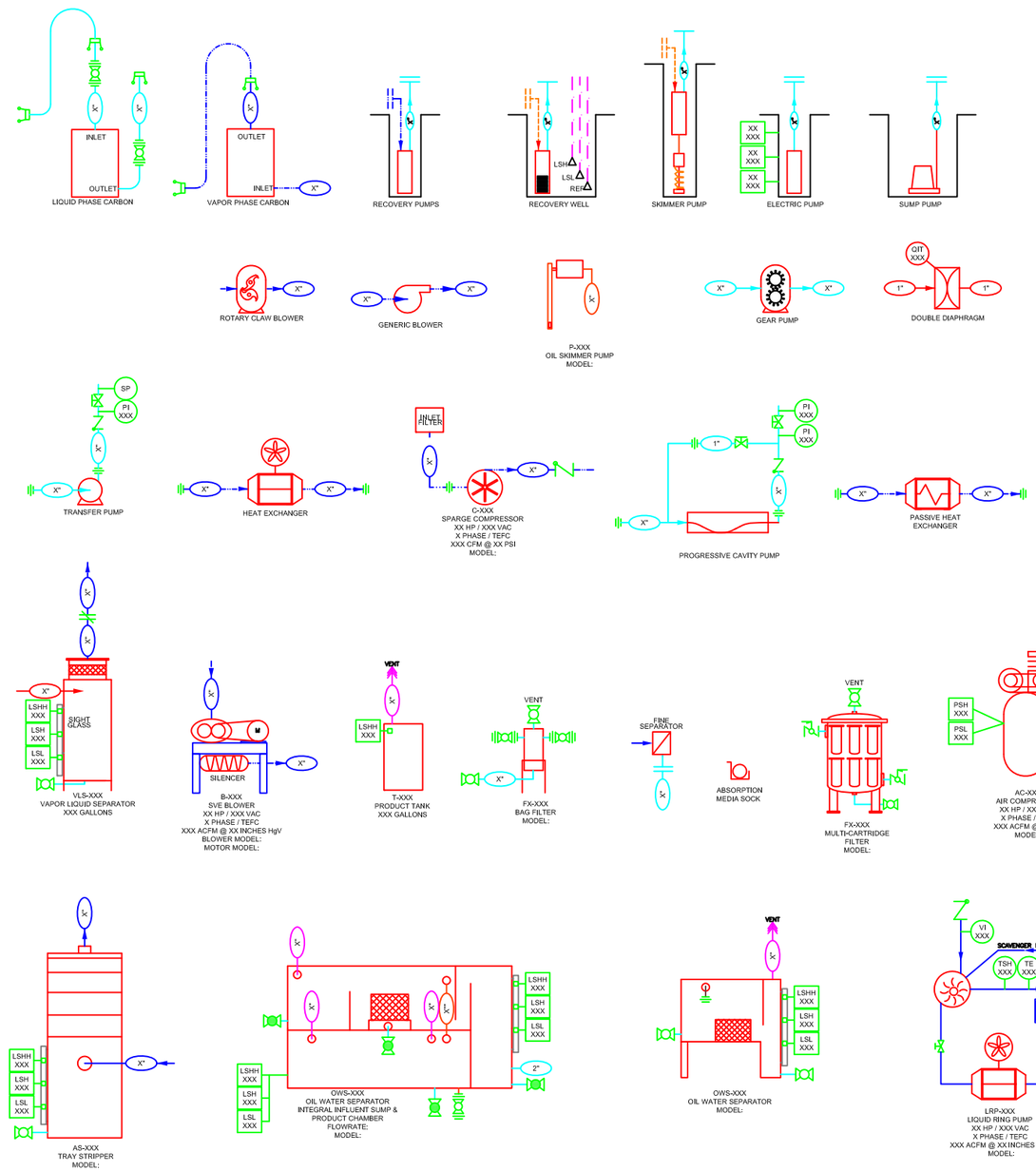

REV	DESCRIPTION	DATE	APPROVED
2	UPDATES FOR SUBMITTAL REVIEW COMMENTS PIPE / HOSE, PRESSURE DROPS, AKRF SPECIFIC COMMENT	08-28-19	CJJ
1	UPDATES FOR SUBMITTAL / APPROVAL REQUIRED	08-14-19	RB
0	PRE-CONSTRUCTION / DRAWING APPROVAL REQUIRED	07-23-19	CJJ

CONFIDENTIALITY NOTICE:
The information contained in this drawing is intended for use only by National Environmental Systems and Medley Air Inc. The information is confidential and any copying, distribution or dissemination without the written consent of National Environmental Systems is STRICTLY PROHIBITED.

NES™
NATIONAL ENVIRONMENTAL SYSTEMS
84 DUNHAM STREET / ATTLEBORO, MA 02703
508-226-1100 (Phone) / 508-226-1180 (Fax)
WWW.NES-INC.COM

DRWN BY: CJJ	DATE: 07-22-19	TITLE: P&ID MASTER LEGEND	
CHK BY: XXX	DATE: XX-XX-XX	MEDLEY AIR / SSDS & SVE EQUIPMENT 12 ECKFORD ST [aka 470 MANHATTAN AVE] - BROOKLYN, NY	JOB NO. 19-120
APPR BY: XXX	DATE: XX-XX-XX	SCALE: NTS / SIZE: D / DWG NO. M-1	SHEET: 2 OF 2 / REV: 2

TABLE 1
PROCESS INSTRUMENTATION DIAGRAM INSTRUMENT LIST

REV 1 AUGUST 28, 2019

19-120 MEDLEY AIR / SSDS & SVE EQUIPMENT - 12 ECKFORD ST [aka 470 MANHATTAN AVE] - BROOKLYN, NY

TAG	ITEM	MODEL	MANUFACTURER	SPECIFICATION
	SECTION 4 - SSDS PROCESS INSTRUMENTATION			
VI-101 / 104	MANIFOLD VACUUM INDICATORS, (-)15 TO 0 IWC-V	LPG4-D7222N	DWYER	[-]15 TO 0 IWC-V / 2.5 INCH STEEL CASE / BRASS WETTED PARTS / 0.25 INCH BOTTOM MOUNT CONNECTION
FE-101 / 104	MANIFOLD PITOT TUBE FLOW ELEMENTS, 4 IN	DS-300-4	DWYER	4 INCH AVERAGING STYLE PITOT TUBE / STAINLESS STEEL CONSTRUCTION W ITH BRASS ISOLATION VALVES / 0 - 200 F TEMP LIMITS
FI-101 / 104	PITOT TUBE MAG GAUGE, 0 - 0.25 IWC	2000-00	DWYER	0 - 0.25 IN WC D.P. RANGE [MINOR DIV. 0.005] / CAST ALUMINUM CASE / 4 IN ACRYLIC COVER / -20 IN Hg TO 15 PSIG PRESSURE LIMITS / 20 - 140 F TEMPERATURE RANGE / 0.125 IN CONNECTIONS
VSL-101	LOW VACUUM SWITCH, 1.4-5.5 IWC, ADJUSTABLE	1950-5-2F	DWYER	PRESSURE SWITCH - XP - ADJUSTABLE / 1.4 TO 5.5 IWC / 0.3 MAX DEAD BAND @ 1.4 IWC / [-]40 TO 140 F TEMP RATING / 45 IWC MAX PRESSURE / SPDT SWITCH TYPE / 15AMP @ 125 VAC SWITCH RATING / 0.125 INCH PROCESS
TI-101, 102	TEMPERATURE INDICATORS, 0 TO 250 F	1NFY4	AV	BIMETAL THERMOMETER / 0 TO 250 F / 2.5 INCH STEM / 3 INCH DIAL / 0.5 INCH MNPT BACK-MOUNT / SS CASE
VI-105	BLOWER INLET VACUUM INDICATOR, (-)15 TO 0 IWC-V	LPG4-D7222N	DWYER	[-]15 TO 0 IWC-V / 2.5 INCH STEEL CASE / BRASS WETTED PARTS / 0.25 INCH BOTTOM MOUNT CONNECTION
PI-101	BLOWER DISCHARGE PRESSURE INDICATOR, 0-10 IWC	LPG4-D8022N	DWYER	0 - 10 IWC / 2.5 INCH STEEL CASE / BRASS WETTED PARTS / 0.25 INCH BOTTOM MOUNT CONNECTION
	SECTION 6 - SVE PROCESS INSTRUMENTATION			
VI-201 / 204	VACUUM INDICATORS, (-)100 TO 0 IWC-V	LPG4-D7722N	DWYER	(-)100 TO 0 IWC-V / 2.5 INCH STEEL CASE / BRASS WETTED PARTS / 0.25 INCH BOTTOM MOUNT CONNECTION
FE-201 / 204	MANIFOLD PITOT TUBE FLOW ELEMENTS, 4 IN	DS-300-4	DWYER	4 INCH AVERAGING STYLE PITOT TUBE / STAINLESS STEEL CONSTRUCTION W ITH BRASS ISOLATION VALVES / 0 - 200 F TEMP LIMITS
FI-201 / 204	PITOT TUBE MAG GAUGES, 0 -0. 5 IWC	2000-0	DWYER	0 - 0.5 IN WC D.P. RANGE [MINOR DIV. 0.01] / CAST ALUMINUM CASE / 4 IN ACRYLIC COVER / -20 IN Hg TO 15 PSIG PRESSURE LIMITS / 20 - 140 F TEMPERATURE RANGE / 0.125 IN CONNECTIONS
VI-205 / 208	VACUUM INDICATORS, (-)100 TO 0 IWC-V	LPG4-D7722N	DWYER	(-)100 TO 0 IWC-V / 2.5 INCH STEEL CASE / BRASS WETTED PARTS / 0.25 INCH BOTTOM MOUNT CONNECTION
TI-201 / 204	TEMPERATURE INDICATORS, 0 TO 250 F	1NFY4	AV	BIMETAL THERMOMETER / 0 TO 250 F / 2.5 INCH STEM / 3 INCH DIAL / 0.5 INCH MNPT BACK-MOUNT / SS CASE
VSL-201	LOW VACUUM SWITCH, 4-20 IWC ADJUSTABLE	1950-20-2F	DWYER	PRESSURE SWITCH - XP - ADJUSTABLE / 0.5 TO 2 PSID / 0.3 MAX DEAD BAND @ 0.5 PSID / (-)40 TO 140 F TEMP RATING / 35 PSI MAX PRESSURE / SPDT SWITCH TYPE / 15AMP @ 125 VAC SWITCH RATING / 0.125 INCH PROCESS
FE-205	DILUTION LINE PITOT TUBE FLOW ELEMENT, 2 IN	DS-300-2	DWYER	2 INCH AVERAGING STYLE PITOT TUBE / STAINLESS STEEL CONSTRUCTION W ITH BRASS ISOLATION VALVES / 0 - 200 F TEMP LIMITS
FI-205	PITOT TUBE MAG GAUGE, 0 - 3 IWC	2003	DWYER	0 - 3 IN WC D.P. RANGE [MINOR DIV. 0.10] / CAST ALUMINUM CASE / 4 IN ACRYLIC COVER / -20 IN Hg TO 15 PSIG PRESSURE LIMITS / 20 - 140 F RANGE / 0.125 IN CONNECTIONS
TSH-201	BLOWER DISCHARGE HIGH TEMPERATURE SWITCH, 0-225 F, ADJUSTABLE	B54-103	UNITED ELECTRIC	IMMERSION PROBE TEMPERATURE SWITCH / 1-SETPOINT ADJUSTABLE - SPDT / 0° to 225°F / ALUMINUM INDOOR / NON HAZARDOUS / 2-1/8 IN L BRASS PROBE / 3/8 IN NPT / 15 AMP RATING / NEMA 1
PI-201 / 203	PRESSURE INDICATORS, 0-25 IWC	LPG4-D8222N	DWYER	0 - 25 IWC / 2.5 INCH STEEL CASE / BRASS WETTED PARTS / 0.25 INCH BOTTOM MOUNT CONNECTION
LSHH , LSH & LSL-201	MS EMERGENCY HIGH, HIGH & LOW LEVEL SWITCH	L500-3 POS	FPI	3-FLOAT STYLE / 1/2 INCH SS ROD / 2 INCH NPT / SS FLOATS - S.G. 0.60 / SPST / 100W / UL LISTED
PI-204	MS TRANSFER PUMP PRESSURE INDICATOR, 0-60 PSI	SGY-D10422N-GF	DWYER	0-60 PSI RANGE / 2.5 INCH STAINLESS STEEL CASE / BRASS WETTED PARTS / / GLYCERIN FILLED / 0.25 INCH BOTTOM MOUNT
LSHH-201	MS CONDENSATE STORAGE DRUM E-HIGH LEVEL SWITCH	F7-SS2	DWYER	FLOAT SWITCH SG 0.75 / 316SS FLOAT, 316SS STEM / 300°F TEMP LIMIT / 450 PSIG PRESSURE LIMIT / 25 VA: 1A @ 200 VAC

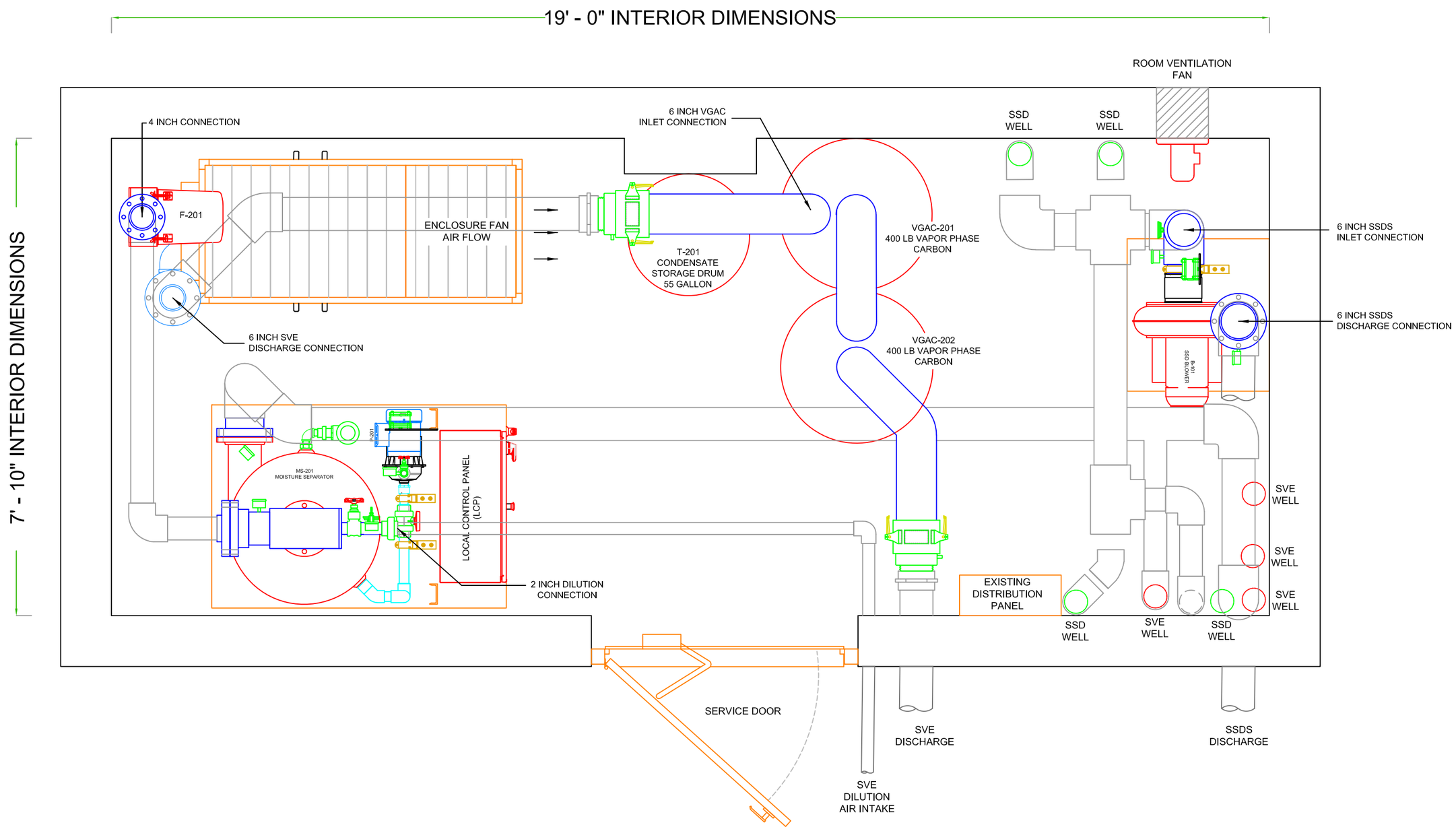

NOTES:

1. DRAWING DEPICTS PRELIMINARY LAYOUT. ACTUAL SITE LAYOUT MAY CHANGE DURING CONSTRUCTION.
2. EQUIPMENT ROOM CEILING HEIGHT IS ASSUMED AT 8 FT - 10.5 IN FINISHED HEIGHT.
3. CONTRACTOR IS RESPONSIBLE FOR INTERCONNECTING PIPING AND CONDUIT.
4. NOT ALL ITEMS SHOWN FOR DRAWING CLARITY.

REV	DESCRIPTION	DATE	APPROVED
3	UPDATES PER SUBMITTAL REVIEW COMMENTS	08-28-19	CJJ
2	UPDATES FOR SUBMITTAL / APPROVAL REQUIRED	08-14-19	RB
1	REVISED PER CLIENT COMMENTS & SITE VISIT	08-09-19	CJJ
0	PRE-CONSTRUCTION / SUBMITTAL APPROVAL REQUIRED	07-26-19	CJJ

REVISIONS

CONFIDENTIALITY NOTICE:
The information contained in this drawing is intended for use only by National Environmental Systems and Medley Air Inc. The information is confidential and any copying, distribution or dissemination without the written consent of National Environmental Systems is STRICTLY PROHIBITED.

NES™
NATIONAL ENVIRONMENTAL SYSTEMS
84 DUNHAM STREET / ATTLEBORO, MA 02703
508-226-1100 (Phone) / 508-226-1180 (Fax)
WWW.NES-INC.COM

DRWN BY CJJ	DATE 07-22-19	TITLE EQUIPMENT ROOM LAYOUT
CHK BY	DATE	MEDLEY AIR / SSDS & SVE EQUIPMENT 12 ECKFORD ST (aka 470 MANHATTAN AVE) - BROOKLYN, NY
APPR BY	DATE	JOB NO. 19-120

SCALE	SIZE	DWG NO.	SHEET	REV
N/A	D	M-2	1 OF 1	3

Medium pressure radial fan in plastic CMV 125 – 400eco

Performance

Flow rate:	min. 80 CFM to max. 6500 CFM
Static pressure:	min. 0.25” SP to max. 10.0” SP
Efficiency:	max. 75 %
Inlet / Outlet-Ø:	5”, 6.3”, 7.9”, 9.85”, 12.4”, 15.75”

Housing

- Self-supporting design
- Thermoformed (Twin-Sheet)
- Available in: PPs, PPs white, PPs-el, PE, PVC, PVDF
- 6 different outlet positions

Impeller

- Injection-molded
- 20 forward-curved streamlined blades
- Torque transmission achieved by aluminium hub, covered with plastic
- Adaptor for easy impeller mounting
- Available in: PPs, PPs-el, PVDF

Support

Direct and V-belt drive: - Sturdy sheet-metal construction
- Available also in stainless steel

Drive

Direct drive: - Impeller is mounted directly onto the motor shaft

V-belt drive:
- Power transmission by v-belt
- Simple tensioning system for easy adjustment or replacement of belts

Motor:
- Three phase motor
  - One / multi-stage
  - Flange mounting motor for direct drive or foot mounting motor for v-belt drive

EX-Protection

[redacted] Construction in ATEX. Available in zone 1 + 2

Hub Seal

- Standard hub seals
- Back plates

Accessories

- PVC sleeve with fixing bands, stainless
- Drain
- RIS or Steel Spring Vibration Isolators
- Connection piece
- Ceiling or wall bracket
- Motor and v-belt cover for OSHA and outside installation
- VFD Controller

Dimensions

[redacted]

Fans CMVeco 125 - 400

Industrial Plastic Fan
128 New Boston St. • MA 01801 Woburn
Phone 1.800.891.3656 • Fax 781 938 0064
www.ipfcolasit.com • adamc@ipfcolasit.com

Data sheet CMVeco 200/200

Reference 1:
Reference 2:
Reference 3:

Configuration data

Airflow	300.0	cfm
Static pressure	9.500	InWg
Operating temp.	68	°F
Density	0.0000433	lb/in³
Medium	non defined	
Drive type	Frequency converter	

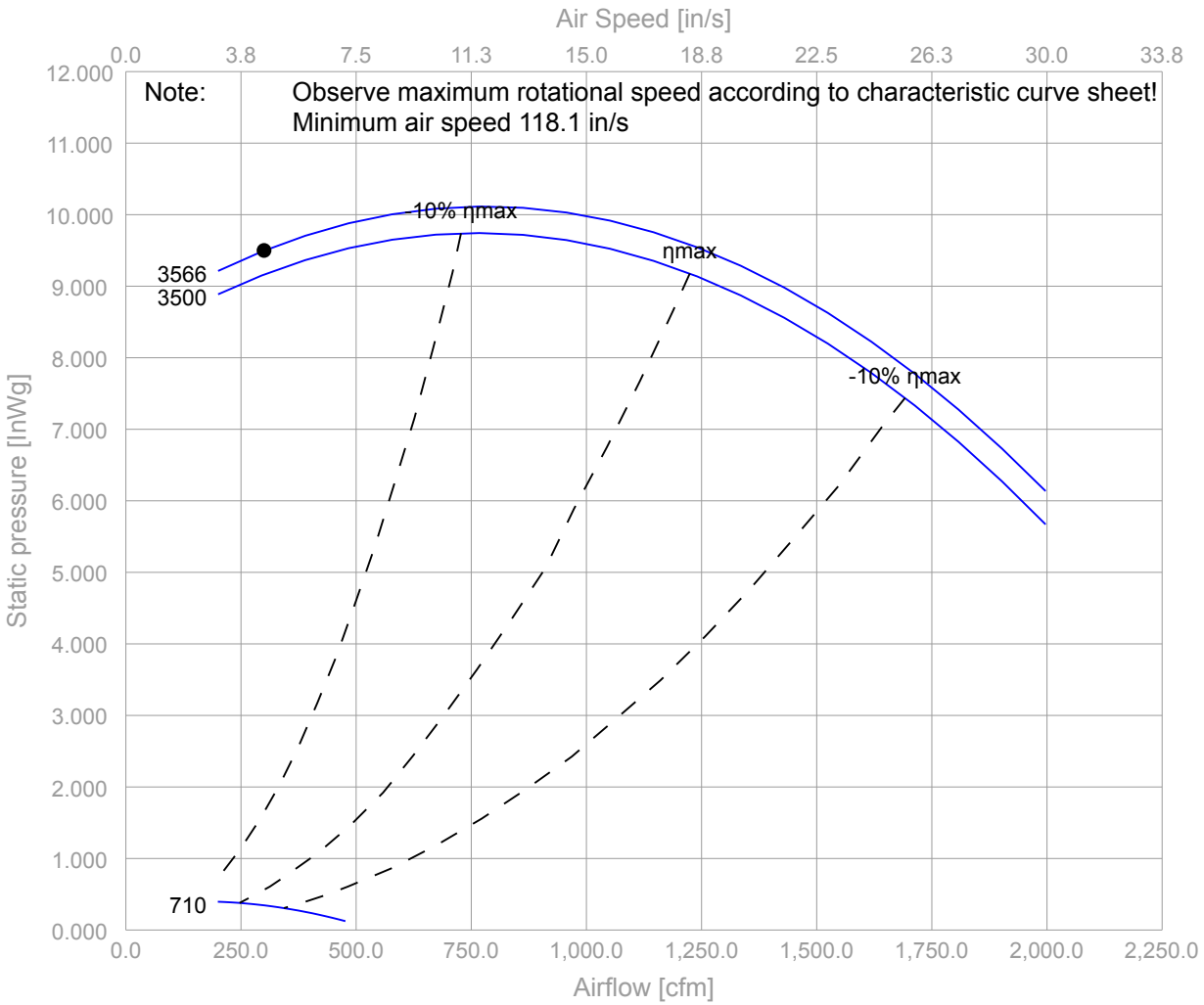

Operating data — Stage 1

Airflow	300.0	cfm
Static pressure	9.500	InWg
Dynamic pressure	0.049	InWg
Total pressure	9.549	InWg
Flow velocity	177.4	in/s
Mechanical efficiency	32.8	%
Sound pressure at 3 m	65	dB(A)
Operating impeller speed	3,566	rpm
Max. impeller speed at 68 °F	3,500	rpm
Shaft power	1.368	hp

Industrial Plastic Fan
128 New Boston St. • MA 01801 Woburn
Phone 1.800.891.3656 • Fax 781 938 0064
www.ipfcolasit.com • adamc@ipfcolasit.com

Data sheet CMVeco 200/200

Reference 1:
Reference 2:
Reference 3:

Motor

The supplier will select a suitable motor.

Weight

Ventilator weight	6.12	lb
Motor weight	-	lb
Total weight	-	lb

ErP conformity

System efficiency	0.0	%
Opt. overall efficiency	0.0	%
Degree of efficiency	not applicable	
Opt. degree of efficiency	-	
Opt. electrical performance	0.000	hp
Opt. airflow	0.0	cfm
Opt. static pressure	0.000	InWg
Opt. rotational speed	0	rpm

Accessories

The supplier will select the accessories.

Impeller

Peripheral speed	2,315.6	in/s
Impeller diameter	12.40	inch
Mass moment of inertia	-	lbft²
Inside diameter Ø	1.10	

Temperature

Max. operating temperature (for configuration point)	-	°F
Max. temperature at 3,500 rpm	-	°F

Noise emission level

(Sound pressure level LpA = LwA – 7 dBS (A) distance 1 meter)

Noise emission (case radiation with lines connected):

	Hz	63	125	250	500	1000	2000	4000	8000
Octave noise emission level:	dB(A)	38	55	64	69	78	79	69	57
Noise emission level	LwA dB(A)	82							

Noise emission (channel values, outlet side) :

	Hz	63	125	250	500	1000	2000	4000	8000
Octave noise emission level:	dB(A)	57	69	78	84	86	86	80	70
Noise emission level	LwA dB(A)	91							

Dimension sheet direct drive CDDeco 125 – 400

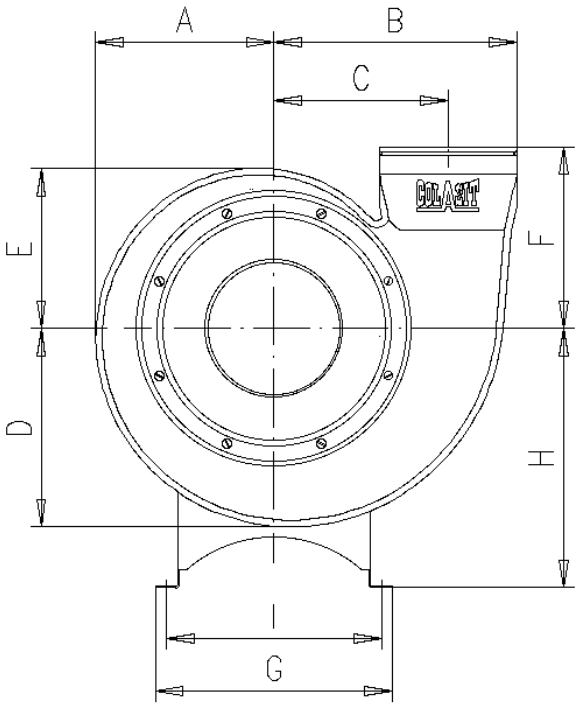

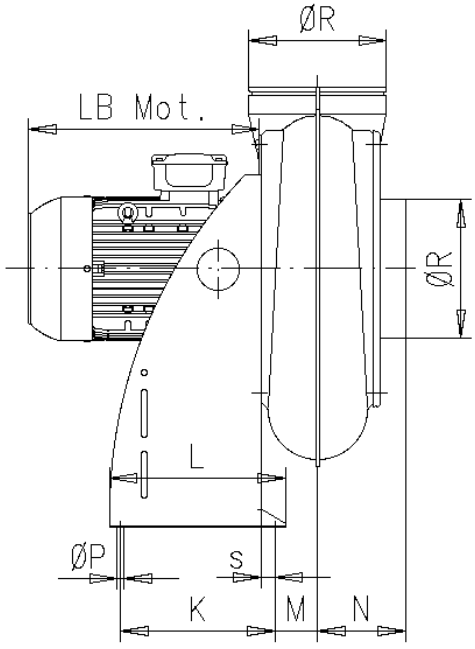

CDD	125	160	200	250	315	400
A	7.40	8.90	10.83	13.23	16.34	17.80
B	8.94	11.26	13.98	17.36	21.81	25.24
C	6.46	8.11	10.04	12.44	15.59	17.36
D	8.11	9.92	12.20	14.96	18.54	20.75
E	6.69	7.87	9.49	11.54	14.13	14.88
F	7.87	8.86	10.83	12.99	15.75	16.73
G	10.63	11.42	14.96	16.93	18.90	22.83
H	9.84	12.20	14.96	18.50	22.83	26.38
I	9.45	10.24	13.78	15.35	17.32	21.26
K	8.66	8.66	10.24	10.83	12.80	14.17
L	9.84	9.84	11.42	12.40	14.37	15.75
M	1.38	1.85	2.52	3.07	4.02	5.24
N	4.33	4.72	5.51	6.30	7.48	8.66
Ø P	0.39	0.39	0.39	0.39	0.39	0.39
Ø R	4.92	6.30	7.87	9.84	12.40	15.75
s	0.59	0.59	0.59	0.79	0.79	0.79

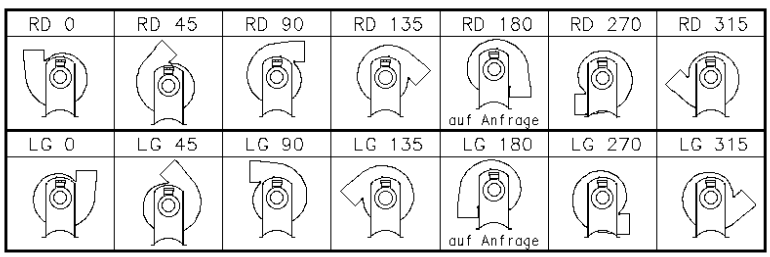

Industrial Plastic Fan
339 North Main St
Middleton, MA 01949
(800) 891-3656
www.ipfcolasit.com

SERIES LPG4

2.5″ LOW PRESSURE GAGE

1.5% Full-Scale Accuracy in a 2.5″ Gage

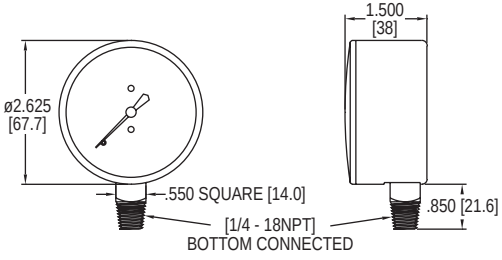

Our **Series LPG4 2.5″ Low Pressure Gage** offers top of the line performance and accuracy for pressure and vacuum applications up to and including 160 in w.c. The LPG4 is constructed from a single beryllium-copper diaphragm affixed to a precision-machined brass plate. This innovative design, together with a high-precision, milled-teeth brass movement and nickel-silver pinion and bearing surface, provide the user with a top of the line low pressure instrument.

FEATURES/BENEFITS

- Low pressure gage provides a selection to meet specific application
- Specifie with high ambient and process temperature ratings mean more robust uses and longer service-life
- High accuracy gage for applications requiring more precise measurement is a concern

APPLICATIONS

- Air flow indicatio
- Liquid level
- Draft measurement

SPECIFICATIONS	
Service: Compatible gases & liquids. **Wetted Materials:** Brass and beryllium copper. **Housing:** Drawn steel, black finish **Lens:** Polycarbonate (removable). **Accuracy:** ±1.5% FS. **Pressure Limit:** 100% of range scale.	**Temperature Limits:** Process: -40 to 160°F (-40 to 70°C); Ambient: -40 to 140°F (-40 to 60°C). **Size:** 2.5″ (63 mm). **Process Connections:** 1/4″ male NPT. **Enclosure Rating:** NEMA 3 (IP54). **Weight:** 7.3 oz (0.21 kg).

OPTIONS	
Use order code:	**Description**
NISTCAL-PG1	NIST traceable calibration certificat

MODEL CHART			
Model	**Range**	**Model**	**Range**
LPG4-D7122N	-10 to 0 in w.c. (-2.5 to 0 kPa)	**LPG4-D8322N**	0 to 40 in w.c. (0 to 10 kPa)
LPG4-D7222N	-15 to 0 in w.c. (-4 to 0 kPa)	**LPG4-D8422N**	0 to 60 in w.c. (0 to 15 kPa)
LPG4-D7322N	-25 to 0 in w.c. (-6 to 0 kPa)	**LPG4-D8522N**	0 to 80 in w.c. (0 to 20 kPa)
LPG4-D7422N	-40 to 0 in w.c. (-10 to 0 kPa)	**LPG4-D8622N**	0 to 100 in w.c. (0 to 25 kPa)
LPG4-D7522N	-60 to 0 in w.c. (-15 to 0 kPa)	**LPG4-D8722N**	0 to 160 in w.c. (0 to 40 kPa)
LPG4-D7622N	-80 to 0 in w.c. (-20 to 0 kPa)	**LPG4-D8922N**	-4 to 0 to 6 in w.c. (-1 to 0 to 1.5 kPa)
LPG4-D7722N	-100 to 0 in w.c. (-25 to 0 kPa)	**LPG4-D9022N**	-6 to 0 to 10 in w.c. (-1.5 to 0 to 2.5 kPa)
LPG4-D7822N	-160 to 0 in w.c. (-40 to 0 kPa)	**LPG4-D9122N**	-8 to 0 to 16 in w.c. (-2 to 0 to 4 kPa)
LPG4-D7922N	-235 to 0 in w.c. (-60 to 0 kPa)	**LPG4-D9222N**	-16 to 0 to 24 in w.c. (-4 to 0 to 6 kPa)
LPG4-D8022N	0 to 10 in w.c. (0 to 2.5 kPa)	**LPG4-D9322N**	-24 to 0 to 40 in w.c. (-6 to 0 to 10 kPa)
LPG4-D8122N	0 to 15 in w.c. (0 to 3.75 kPa)	**LPG4-D9422N**	-30 to 0 to 50 in w.c. (-7.5 to 0 to 12.5 kPa)
LPG4-D8222N	0 to 25 in w.c. (0 to 6 kPa)	**LPG4-D9522N**	-40 to 0 to 60 in w.c. (-10 to 0 to 15.0 kPa)

USA: California Proposition 65
⚠WARNING: Cancer and Reproductive Harm - www.P65Warnings.ca.gov

Dwyer

SERIES DS

IN-LINE FLOW SENSORS

Use with the Dwyer® Differential Pressure Gages or Transmitters

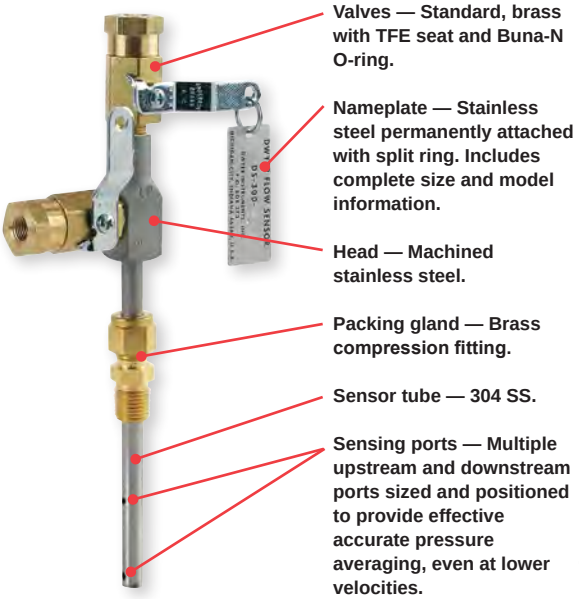

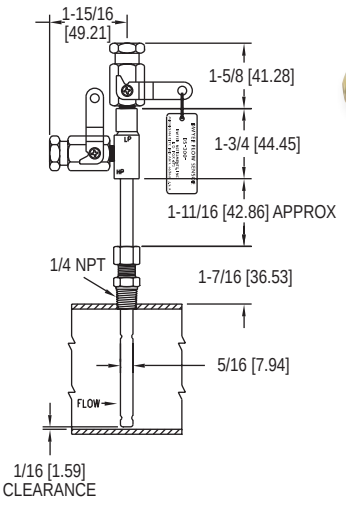

Series DS-300

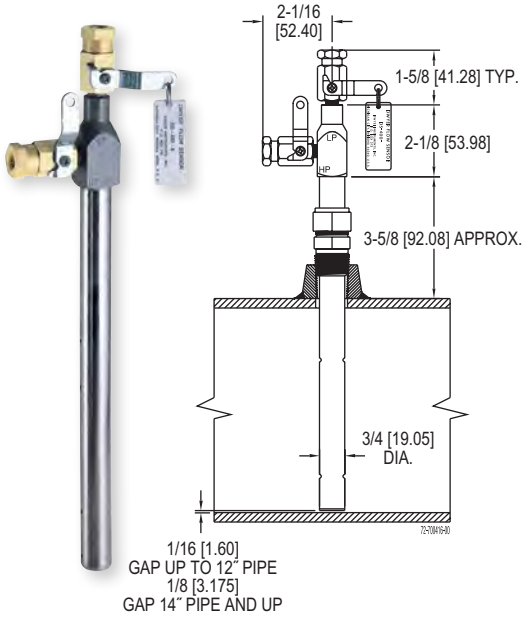

Large 3/4 Inch Diameter for Extra Strength in Lengths to 24 Inches

Series DS-400

The **Series DS In-Line Flow Sensors** are two Series of averaging Pitot tubes for compatible gases and liquids that provide accurate and convenient flow rate sensing, for schedule 40 pipe, when purchased with suitable differential pressure gage with appropriate range. The Series DS-300 Averaging Flow Sensors are designed to be inserted in the pipeline through a compression fitting and available for pipe sizes from 1 to 10″ (2.5 to 25.4 cm). Accessories include adapters with 1/4″ SAE 45° flared ends compatible with hoses supplied with the Model A-471 Portable Capsuhelic® Gage Kit. The Series DS-400 Averaging Flow Sensors are designed for insertion lengths up to 24″ (61 cm) and include a pair of 1/8″ NPT x 1/4″ SAE 45° flared adapters which are compatible with hoses used in the Model A-471 Portable Capsuhelic® Gage Kit. The supplied solid brass mounting adapter has a 3/4″ dia. compression fitting to lock in required insertion length and a 3/4″ male NPT thread for mounting in a threaded branch connection (not included).

SPECIFICATIONS

Service: Compatible gases or liquids.
Wetted Materials: Sensor tube: 304 SS; Compression fitting: brass
Temperature Limit: 200°F (93.3°C).
Pressure Limit: 200 psig (13.78 bar) at 200°F (93.3°C).
Pipe Sizes: DS-300: 1 to 10″ (2.5 to 25.4 cm); DS-400: 6 to 24″ (15.2 to 61 cm).
Process Connections: DS-300: 1/4″ male NPT compression fitting included; DS 400: 3/4″ male NPT compression fitting included
Piping Connections: DS-300: 1/8″ female NPT; optional 1/8″ female NPT x 1/4″ SAE 45 flared adapter sold separately; DS-400: 1/8″ female NP with 1/8″ female NPT x 1/4″ SAE 45 flared adapters include
Weights: Consult factory.

FEATURES/BENEFITS

- Multiple sensing point measurement and built-in averaging capability eliminates the need for “traversing” the flowing str am with single point velocity pressure measurement saving time
- Extremely reliable, proven technology, Pitot tubes, have been used in flow measurement for years
- All models include convenient and quick-acting quarter-turn ball valves to isolate the sensor for zeroing with 1/8″ female NPT valve assembly process connections.
- Furnished with instrument shut-off valves on both pressure connections with 1/8″ female NPT connections rated at 200 psig (13.7 bar) and 200°F (93.3°C)
- Where valves are not required, they can be omitted at reduced cost
- The Series DS-400 Averaging Flow Sensors are quality constructed from extra strong 3/4″ dia. stainless steel to resist increased forces encountered at higher flow rates with both air and water
- Economical flow indication when used ith appropriate differential pressure gage
- Rugged construction yields, non-clogging, stable design

APPLICATIONS

- Remediation
- Natural, flare, flue, stack g
- Boiler feedwater
- Cooling water
- Superheated, saturated, or geothermal steam
- Combustion or compressed air
- Oil flow monitorin

USA: California Proposition 65
⚠WARNING: Cancer and Reproductive Harm - www.P65Warnings.ca.gov

IN-LINE FLOW SENSORS

Use with the Dwyer® Differential Pressure Gages or Transmitters

HOW TO ORDER

Merely determine the pipe size into which the flow sensor will be mounted and designate the size as a suffix to Model DS-300. For example, a flow sensor to be mounted in a 2″ pipe would be a Model No. DS-300-2″.

For non-critical water and air flow monitoring applications, the chart below can be utilized for ordering a stock Capsuhelic® differential pressure gage for use with the DS-300 flow sensor. Simply locate the maximum flow rate for the media being measured under the appropriate pipe size and read the Capsuhelic® gage range in inches of water column to the left. The DS-300 sensor is supplied with installation and operating instructions, Bulletin F-50. It also includes complete flow conversion information for the three media conditions shown in the chart below. This information enables the user to create a complete differential pressure to flow rate conversion table for the sensor and differential pressure gage employed. Both the Dwyer® Capsuhelic® gage and flow sensor feature excellent repeatability so, once the desired flow rate is determined, deviation from that flow in quantitative measure can be easily determined. You may wish to order the adjustable signal flag option for the Capsuhelic® gage to provide an easily identified reference point for the proper fl .

Capsuhelic® gages with special ranges and/or direct reading scales in appropriate flow units are available on special order for more critical applications. Customer supplied data for the full scale flow (quantity and units) is required along with the differential pressure reading at that full flow figure. Prior to ordering a special Capsuhelic® differential pressure gage for flow read-out, we recommend you request Bulletin F-50 to obtain complete data on converting flow rates of various media to the sensor differential pressure output. With this bulletin and after making a few simple calculations, the exact range gage required can easily be determined.

MODEL CHART

Model	Description	Model	Description
DS-300-1″	1″ pipe size	**DS-400-6″**	6″ pipe size
DS-300-1-1/4″	1-1/4″ pipe size	**DS-400-8″**	8″ pipe size
DS-300-1-1/2″	1-1/2″ pipe size	**DS-400-10″**	10″ pipe size
DS-300-2″	2″ pipe size	**DS-400-12″**	12″ pipe size
DS-300-2-1/2″	2-1/2″ pipe size	**DS-400-14″**	14″ pipe size
DS-300-3″	3″ pipe size	**DS-400-16″**	16″ pipe size
DS-300-4″	4″ pipe size	**DS-400-18″**	18″ pipe size
DS-300-6″	6″ pipe size	**DS-400-20″**	20″ pipe size
DS-300-8″	8″ pipe size	**DS-400-24″**	24″ pipe size
DS-300-10″	10″ pipe size		

OPTIONS

To order add suffix:	Description
-LV	DS-300 or DS-400 less valves

RANGE CHART

Gage Range (in w.c.)	Media @ 70°F	Full Range Flows by Pipe Size (Approximate)									
		1″	1-1/4″	1-1/2″	2″	2-1/2″	3″	4″	6″	8″	10″
2	Water (GPM)	4.8	8.3	11.5	20.5	30	49	86	205	350	560
2	Air @ 14.7 PSIA (SCFM)	19.0	33.0	42.0	65.0	113	183	330	760	1340	2130
2	Air @ 100 PSIG (SCFM)	50.0	90.5	120.0	210.0	325	510	920	2050	3600	6000
5	Water (GPM)	7.7	14.0	18.0	34.0	47	78	138	320	560	890
5	Air @ 14.7 PSIA (SCFM)	30.0	51.0	66.0	118.0	178	289	510	1200	2150	3400
5	Air @ 100 PSIG (SCFM)	83.0	142.0	190.0	340.0	610	820	1600	3300	5700	10000
10	Water (GPM)	11.0	19.0	25.5	45.5	67	110	195	450	800	1260
10	Air @ 14.7 PSIA (SCFM)	41.0	72.0	93.0	163.0	250	410	725	1690	3040	4860
10	Air @ 100 PSIG (SCFM)	120.0	205.0	275.0	470.0	740	1100	2000	4600	8100	15000
25	Water (GPM)	18.0	32.0	40.5	72.0	108	173	310	720	1250	2000
25	Air @ 14.7 PSIA (SCFM)	63.0	112.0	155.0	255.0	390	640	1130	2630	4860	7700
25	Air @ 100 PSIG (SCFM)	185.0	325.0	430.0	760.0	1200	1800	3300	7200	13000	22000
50	Water (GPM)	25.0	44.0	57.5	100.0	152	247	435	1000	1800	
50	Air @ 14.7 PSIA (SCFM)	90.0	161.0	205.0	360.0	560	900	1600	3700	6400	
50	Air @ 100 PSIG (SCFM)	260.0	460.0	620.0	1050.0	1700	2600	4600	10000	18500	
100	Water (GPM)	36.5	62.0	82.0	142.0	220	350	620	1500		
100	Air @ 14.7 PSIA (SCFM)	135.0	230.0	300.0	505.0	800	1290	2290	5000		
100	Air @ 100 PSIG (SCFM)	370.0	660.0	870.0	1500.0	2300	3600	6500	15000		

ACCESSORIES

Model	Description
A-160	Threaded branch connection, 3/8″ NPT, forged steel, 3000 psi
A-161	Brass bushing, 1/4″ x 3/8″
A-471	Portable Kit. For portable operation, the A-471 Capsuhelic® Portable Gage Kit is available complete with tough polypropylene carrying case, mounting bracket, 3-way manifold valve, two 10' high pressure hoses, and all necessary fittings ❶
631B	Capsuhelic® Wet/Wet Differential Pressure Transmitter. Low pressure transmitter for use with DS-300/400 flow sensors. Use Series 631B Capsuhelic® Wet/Wet Differential Pressure Transmitter.❷

Capsuhelic® Gage Shown Installed In A-471 Portable Kit

Series 631B

USA: California Proposition 65
⚠WARNING: Cancer and Reproductive Harm - www.P65Warnings.ca.gov

❶See page 31 (Series 4000)
❷See page 82 (Series 631B)

Dwyer
SERIES 2000

MAGNEHELIC® DIFFERENTIAL PRESSURE GAGES

Indicate Positive, Negative or Differential, Accurate within 1%

5 YEAR LIMITED WARRANTY

Standard Magnehelic® Gage

High Accuracy Magnehelic® Gage
Note: Shown with optional -SS bezel

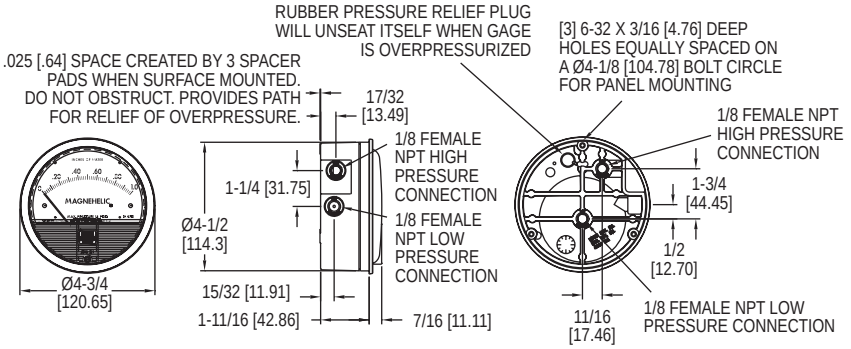

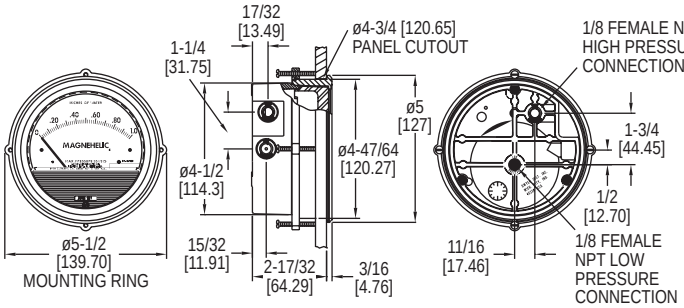

VIDEO ONLINE

Select the **Series 2000 Magnehelic® Differential Pressure Gages** for a versatile low differential pressure gage with a wide choice of 81 models and 27 options to choose from. Using Dwyer's simple, frictionless Magnehelic® gage movement, it quickly indicates air or non-corrosive gas pressures--either positive, negative (vacuum) or differential. The design resists shock, vibration, over-pressures and is weatherproof to IP67.
Select the –HA High Accuracy Magnehelic® gage option for an accuracy within 1% of full scale. Also included with the –HA option at no extra cost are a mirrored scale overlay and a 6 point calibration certificate

FEATURES/BENEFITS

- Easy to read gage through undistorted plastic face permits viewing from far away
- Patented design provides quick response to pressure changes means no delay in assessing critical situations
- Durable and rugged housing and high-quality components combine to provide long-service life and minimized down-time
- High accuracy option is twice as accurate as the standard Magnehelic® gage

APPLICATIONS

- Filter monitoring
- Air velocity with Dwyer pitot tube
- Blower vacuum monitoring
- Fan pressure indication
- Duct, room or building pressures
- Clean room positive pressure indication

SPECIFICATIONS

Service: Air and non-combustible, compatible gases (natural gas option available). **Note:** May be used with hydrogen. Order a Buna-N diaphragm. Pressures must be less than 35 psi.
Wetted Materials: Consult factory.
Housing: Die cast aluminum case and bezel, with acrylic cover. Exterior finish is coated gray to withstand 168 hour salt spray corrosion test.
Accuracy: ±2% (-HA model ±1) of FS (±3% (-HA ±1.5%) on -0, -100PA, -125PA, -10MM and ±4% (-HA ±2%) on -00, -60PA, -6MM ranges), throughout range at 70°F (21.1°C).
Pressure Limits: -20 in Hg to 15 psig (-0.677 to 1.034 bar); MP option: 35 psig (2.41 bar); HP option: 80 psig (5.52 bar).
Enclosure Rating: IP67.
Overpressure: Relief plug opens at approximately 25 psig (1.72 bar), standard gages only.❶

Temperature Limits: 20 to 140°F* (-6.67 to 60°C). -20°F (-28°C) with low temperature option.
Size: 4″ (101.6 mm) diameter dial face.
Mounting Orientation: Diaphragm in vertical position. Consult factory for other position orientations.
Process Connections: 1/8″ female NPT duplicate high and low pressure taps - one pair side and one pair back.
Weight: 1 lb 2 oz (510 g), MP & HP 2 lb 2 oz (963 g).
Standard Accessories: Two 1/8″ NPT plugs for duplicate pressure taps, two 1/8″ pipe thread to rubber tubing adapter, and three flush mounting adapters with screws. (Mounting and snap ring retainer substituted for three adapters in MP & HP gage accessories.)
Agency Approvals: Meets the technical requirements of EU Directive 2011/65/EU (RoHS II). **Note:** -SP models not RoHS approved.

Note: For applications with high cycle rate within gage total pressure rating, next higher rating is recommended. See Medium and High pressure options.

*Low temperature models available as special options.

ACCESSORIES

Model	Description
A-432	Portable kit; combine carrying case with any Magnehelic® gage of standard range, except high pressure connection. Includes 9 ft (2.7 m) of 3/16″ ID rubber tubing, standhang bracket and terminal tube with holder
A-605	Air filter gage accessory kit; adapts any standard Magnehelic® gage for use as an air filter gage. Includes aluminum surface mounting bracket with screws, two 5 ft (1.5 m) lengths of 1/4″ aluminum tubing, two static pressure tips and two molded plastic vent valves, integral compression fittings on both tips and valve
A-605B	Air filter gage accessory kit; air filter kit with two plastic open/clos valves, two 4″ steel static tips, plastic tubing and mounting flang
A-605C	Air filter gage accessory kit; air filter kit with two plastic open/clos valves, two plastic static tips, plastic tubing and mounting flang

A-432

A-605

❶Over Protection Note: See page 21 (Series 2000)

MAGNEHELIC® DIFFERENTIAL PRESSURE GAGES

Indicate Positive, Negative or Differential, Accurate within 1%

Bezel provides flange for flush mounting in panel.

Clear plastic face is highly resistant to breakage. Provides undistorted viewing of pointer and scale.

Precision litho-printed scale is accurate and easy to read.

Calibrated range spring is flat spring steel. Small amplitude of motion assures consistency and long life. It reacts to pressure on diaphragm. Live length adjustable for calibration.

Red tipped pointer of heat treated aluminum tubing is easy to see. It is rigidly mounted on the helix shaft.

Pointer stops of molded rubber prevent pointer over-travel without damage.

"Wishbone" assembly provides mounting for helix, helix bearings and pointer shaft.

Jeweled bearings are shock-resistant mounted; provide virtually friction-free motion for helix. Motion damped with high viscosity silicone fluid.

Helix is precision made from an alloy of high magnetic permeability. Mounted in jeweled bearings, it turns freely, following the magnetic field to move the pointer across the scale.

Zero adjustment screw is conveniently located in the plastic cover, and is accessible without removing cover. O-ring seal provides pressure tightness.

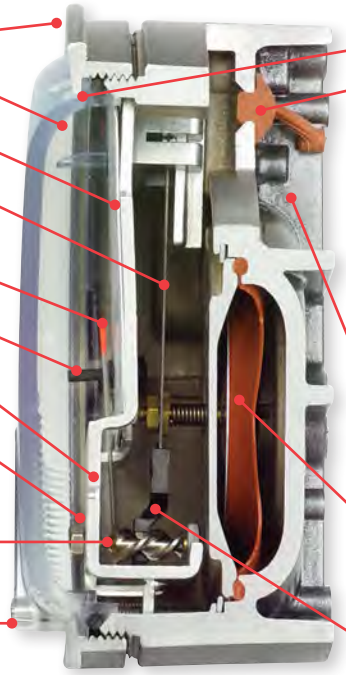

O-ring seal for cover assures pressure integrity of case.

OVERPRESSURE PROTECTION
Blowout plug is comprised of a rubber plug on the rear which functions as a relief valve by unseating and venting the gage interior when over pressure reaches approximately 25 psig (1.7 bar). To provide a free path for pressure relief, there are four spacer pads which maintain 0.023″ clearance when gage is surface mounted. Do not obstruct the gap created by these pads.
The blowout plug is not used on models above 180″ of water pressure, medium or high pressure models, or on gages which require an elastomer other than silicone for the diaphragm.
The blowout plug should not be used as a system overpressure control. High supply pressures may still cause the gage to fail due to over pressurization, resulting in property damage or serious injury. Good engineering practices should be utilized to prevent your system from exceeding the ratings of any component.

Die cast aluminum case is precision made and iridite-dipped to withstand 168 hour salt spray corrosion test. Exterior finished in baked dark gray hammerloid. One case size is used for all standard pressure options, and for both surface and flush mounting.

Silicone rubber diaphragm with integrally molded O-ring is supported by front and rear plates. It is locked and sealed in position with a sealing plate and retaining ring. Diaphragm motion is restricted to prevent damage due to overpressures.

Samarium Cobalt magnet mounted at one end of range spring rotates helix without mechanical linkages.

MODEL CHART

Model	Range, Inches of Water
2000-00N†••	0-.25-.2
2000-00†••	0-.25
2000-0†•	0-.50
2001	0-1.0
2002	0-2.0
2003	0-3.0
2004	0-4.0
2005	0-5.0
2006	0-6.0
2008	0-8.0
2010	0-10
2012	0-12
2015	0-15
2020	0-20
2025	0-25
2030	0-30
2040	0-40
2050	0-50
2060	0-60
2080	0-80
2100	0-100
2120	0-120
2150	0-150
2160	0-160
2180*	0-180
2250*	0-250
Zero Center Ranges	
2300-00†••	0.125-0-0.125
2300-0†•	.25-0-.25
2301	.5-0-.5
2302	1-0-1
2304	2-0-2
2310	5-0-5
2320	10-0-10
2330	15-0-15

Model	Range, PSI
2201	0-1
2202	0-2
2203	0-3
2204	0-4
2205	0-5
2210*	0-10
2215*	0-15
2220*	0-20
2230**	0-30

Model	Range, CM of Water
2000-15CM	0-15
2000-20CM	0-20
2000-25CM	0-25
2000-50CM	0-50
2000-80CM	0-80
2000-100CM	0-100
2000-150CM	0-150
2000-200CM	0-200
2000-250CM	0-250
2000-300CM	0-300
Zero Center Ranges	
2300-4CM	2-0-2
2300-10CM	5-0-5
2300-30CM	15-0-15

Model	Range, MM of Water
2000-6MM†••	0-6
2000-10MM†•	0-10
2000-15MM	0-15
2000-25MM	0-25
2000-30MM	0-30
2000-50MM	0-50
2000-80MM	0-80
2000-100MM	0-100
2000-125MM	0-125
2000-150MM	0-150
2000-200MM	0-200
2000-250MM	0-250
2000-300MM	0-300
Zero Center Ranges	
2300-6MM†••	3-0-3
2300-10MM†•	5-0-5
2300-20MM†•	10-0-10

Model	Range, Pa
2000-60NPA†••	10-0-50
2000-60PA†••	0-60
2000-100PA†•	0-100
2000-125PA†•	0-125
2000-250PA	0-250
2000-300PA	0-300
2000-500PA	0-500
2000-750PA	0-750
2000-1000PA	0-1000
Zero Center Ranges	
Model	**Range, Pa**
2300-60PA†••	30-0-30
2300-100PA†•	50-0-50
2300-120PA	60-0-60
2300-200PA	100-0-100
2300-250PA	125-0-125
2300-300PA	150-0-150
2300-500PA	250-0-250
2300-1000PA	500-0-500

Model	Range, kPa
2000-0.5KPA	0-0.5
2000-1KPA	0-1
2000-1.5KPA	0-1.5
2000-2KPA	0-2
2000-2.5KPA	0-2.5
2000-3KPA	0-3
2000-4KPA	0-4
2000-5KPA	0-5
2000-8KPA	0-8
2000-10KPA	0-10
2000-15KPA	0-15
2000-20KPA	0-20
2000-25KPA	0-25
2000-30KPA	0-30
Zero Center Ranges	
2300-1KPA	.5-0-.5
2300-2KPA	1-0-1
2300-2.5KPA	1.25-0-1.25
2300-3KPA	1.5-0-1.5

Dual Scale Air Velocity Units
For use with pitot tube

Model	Range, in w.c./ Velocity F.P.M.
2000-00AV†••	0-.25/ 300-2000
2000-0AV†•	0-.50/ 500-2800
2001AV	0-1.0/ 500-4000
2002AV	0-2.0/ 1000-5600
2005AV	0-5.0/ 2000-8800
2010AV	0-10/ 2000-12500

Dual Scale English/Metric Models

Model	Range, in w.c.	Range, Pa or kPa
2000-00D†••	0-.25	0-62 Pa
2000-0D†•	0-0.5	0-125 Pa
2001D	0-1.0	0-250 Pa
2002D	0-2.0	0-500 Pa
2003D	0-3.0	0-750 Pa
2004D	0-4.0	0-1.0 kPa
2005D	0-5.0	0-1.25 kPa
2006D	0-6.0	0-1.5 kPa
2008D	0-8.0	0-2.0 kPa
2010D	0-10	0-2.5 kPa
2015D	0-15	0-3.7 kPa
2020D	0-20	0-5 kPa
2025D	0-25	0-6.2 kPa
2050D	0-50	0-12.4 kPa
2060D	0-60	0-15 kPa

†These ranges calibrated for vertical scale position • Accuracy ±3% •• Accuracy ±4% *MP option standard **HP option standard

VELOCITY AND VOLUMETRIC FLOW UNITS
Scales are available on the Magnehelic® gage that read in velocity units (FPM, m/s) or volumetric flow units (SCFM, m^3/s, m^3/h). Stocked velocity units with dual range scales in inches w.c. and feet per minute are shown above. For other ranges contact the factory. When ordering volumetric flow scales please specify the maximum flow rate and its corresponding pressure.
Example: 0.5 in w.c. = 16,000 CFM.

ACCESSORIES

Model	Description
A-321	Safety relief valve
A-448	3-piece magnet kit for mounting Magnehelic® gage directly to magnetic surface
A-135	Rubber gasket for panel mounting
A-401	Plastic carry case
A-310A	3-way vent valves. In applications where pressure is continuous and the Magnehelic® gage is connected by metal or plastic tubing which cannot be easily removed, we suggest using Dwyer A-310A vent valves to connect gage. Pressure can then be removed to check or re-zero the gage.

A-310A

SERIES 1950 | EXPLOSION-PROOF DIFFERENTIAL PRESSURE SWITCH

FEATURES/BENEFITS

- **Explosion-proof and weatherproof housing provides device protection for outdoor use or harsh environment operation**
- **External set point screw provides easy access without opening or disassembling enclosure**
- **Easily accessible electrical connection simplifies the installation**

APPLICATIONS

- HVAC applications
- Process applications
- All-weather applications

DESCRIPTION

The **Series 1950 Explosion-Proof Differential Pressure Switch** combines the best features of the popular Dwyer® Series 1900 Pressure Switch with an integral explosion-proof and weatherproof housing, making it an exceptional value for either application. It is CE, UL and CSA listed, FM approved for use in Class I, Div 1, Groups C and D, Class II Groups E, F, and G and Class III hazardous atmospheres NEMA 7 & 9. Rain tight NEMA 3 (IP54), weatherproof features include a drain plug and O-ring seal in cover. Electrical connections are easily made by removing front cover. For convenience the set point adjustment screw is located on the outside of the housing. Twelve models offer set points from .03 to 20 in w.c. (0.0075 to 5 kPa) and from .5 to 60 psi (0.035 to 3.5 bar). The unit is very light and compact - about half the weight and bulk of other explosion-proof or weatherproof switches with separate enclosures.

SPECIFICATIONS

Service	Air and non-combustible, compatible gases.
Wetted Materials	Consult factory.
Temperature Limits	-40 to 140°F (-40 to 60°C); 0 to 140°F (-17.8 to 60°C) for 1950P-8, 15, 25, and 50. -30 to 130°F (-34.4 to 54.4°C) for 1950-02.
Pressure Limits (Continuous)	1950's - 45 in w.c. (0.11 bar); 1950P's - 35 psi (2.41 bar); 1950P-50 only - 70 psi (4.83 bar). Surge: 1950's - 10 psi (0.69 bar), 1950P's - 50 psi (3.45 bar), 1950P-50 only - 90 psi (6.21 bar).
Enclosure Rating	NEMA 3 (IP54), NEMA 7 & 9.
Switch Type	Single-pole double-throw (SPDT).
Electrical Rating	15 A @, 125, 250, 480 VAC, 60 Hz. Resistive 1/8 HP @ 125 VAC, 1/4 HP @ 250 VAC, 60 Hz.
Electrical Connections	3 screw type, common, normally open and normally closed.
Process Connections	1/8″ female NPT.
Mounting Orientation	Diaphragm in vertical position. Consult factory for other position orientations.
Set Point Adjustment	Screw type on top of housing.
Weight	3.25 lb (1.5 kg); 1950-02 model, 4.4 lb (2 kg).
Agency Approvals	CE, CSA, FM, UL.

DWYER INSTRUMENTS, INC.
T: 219-879-8000 | F: 219-872-9057 | info@dwyermail.com
800-872-9141

DIMENSIONS

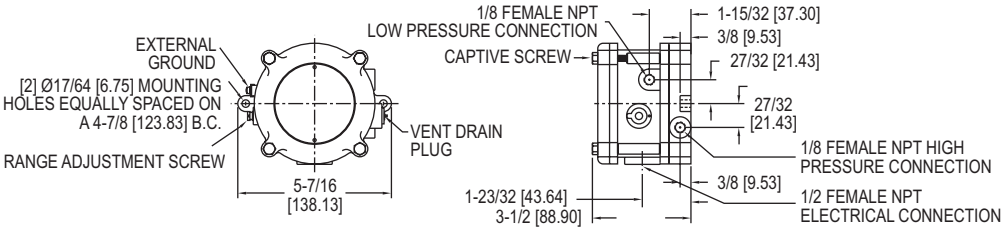

WIRING DIAGRAM

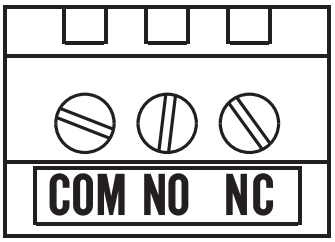

HOW TO ORDER

Use the **bold** characters from the chart below to construct a product code.

1950 **-02** **-2** **S** **-AT**

SWITCH TYPE
1950: Pressure switch - inches w.c.
1950P: Pressure switch - PSID

RANGE
-02: 0.03 - 0.10 in w.c.
-00: 0.07 - 0.15 in w.c.
-0: 0.15 - 0.5 in w.c.
-1: 0.4 - 1.6 in w.c.
-5: 1.4 - 5.5 in w.c.
-10: 3.0 - 11.0 in w.c.
-20: 4.0 - 20.0 in w.c.
-2: 0.5 - 2.0 psid
-8: 1.5 - 8.0 psid
-15: 3.0 - 15.0 psid
-25: 4.0 - 25.0 psid
-50: 15.0 - 50.0 psid

MICRO SWITCH TYPE
-2: 10G mica silver contact*
-6: 10G phenolic gold contact
-M: 10C phenolic silver contact

OPTIONS
-AT: Aluminum tag
-PRESET: Preset
-ST: Stainless steel tag

DIAPHRAGM MATERIAL
B: Buna-N
F: Flurosilicone*
N: Neoprene
S: Silicone
V: Fluroelastomer

*The 2F is standard

Important Notice: Dwyer Instruments, Inc. reserves the right to make changes to or discontinue any product or service identified in this publication without notice. Dwyer advises its customers to obtain the latest version of the relevant information to verify, before placing any orders, that the information being relied upon is current.

DWYER INSTRUMENTS, INC.
T: 219-879-8000 | F: 219-872-9057 | info@dwyermail.com
800-872-9141

GRAINGER FOR THE ONES WHO GET IT DONE GRAINGER INTERNATIONAL, INC. GLOBAL SOURCING DIVISION	-- GGS TECHNICAL SPECIFICATION --			
	SPECIFICATION NUMBER: 1NFY4_TSRev1.doc	AUTHOR: Hoskinson	TITLE: ENG	REL. DATE: 5/25/07
	GGS MODEL NUMBER(s): 1NFY4	DESCR PTION: Industrial thermometer	REVISION #: 1	REV. DATE: 8/10/07

1.0 BRAND:	No brand
2.0 PRODUCT DESCRIPTION:	Bimetal Industrial Thermometer

3.0 PRODUCT PHOTO(S):

4.0 PRODUCT REQUIREMENTS:

4.1 Features & Performance	Requirement
Temperature scale(s)	°F: 0 to 250 °C: -20 to 120
Connection location/type	Back; 1/2 inch NPT
Dial size (inches)	3
Stem length (inches)	2 1/2
Stem diameter (inches)	1/4 In
Rotated degrees	N/A
Angled degrees	N/A
Full scale accuracy	≤40°F: ±1.5% 41 to 200°F: ±1% ≥201°F: ±1.5%
Calibration	External Adjustment

4.2 Materials & Construction	Requirement
Case	Stainless Steel Hermetically Sealed to Prevent Icing/Fogging Inside
Stem	Stainless Steel
Coil dampening	Silicone for Superior Time Response and Vibration Dampening
Dial face	Glass

4.3 Finish / Color	Requirement
All Surface Finishes	a) Surface finishes must be uniform and continuous. The surface finish must not exhibit any visual defects such as blisters, rust, corrosion, scratches, peeling, bubbles, and/or cracking. b) All exposed surfaces must be free of burrs and sharp edges. c) All applied finishes must adhere to the surface and show no signs of delamination or peeling.
Finish	Stainless Steel

This specification is based on the manufacturers design and is to be used as a Quality Control document.

The information contained in this document may be privileged and confidential and protected from disclosure. You are hereby notified that any unauthorized dissemination, distribution or copying of this communication is strictly prohibited. If you have received this communication in error, please notify us immediately by telephone, delete any electronic copy and destroy any printed copy.

SERIES LPG4

2.5″ LOW PRESSURE GAGE

1.5% Full-Scale Accuracy in a 2.5″ Gage

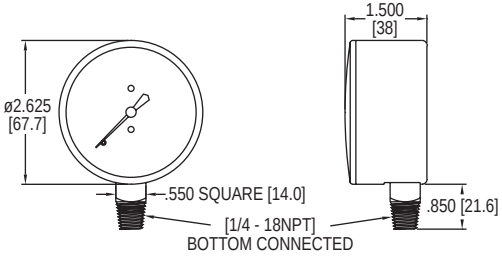

Our **Series LPG4 2.5″ Low Pressure Gage** offers top of the line performance and accuracy for pressure and vacuum applications up to and including 160 in w.c. The LPG4 is constructed from a single beryllium-copper diaphragm affixed to a precision-machined brass plate. This innovative design, together with a high-precision, milled-teeth brass movement and nickel-silver pinion and bearing surface, provide the user with a top of the line low pressure instrument.

FEATURES/BENEFITS

- Low pressure gage provides a selection to meet specific application
- Specifie with high ambient and process temperature ratings mean more robust uses and longer service-life
- High accuracy gage for applications requiring more precise measurement is a concern

APPLICATIONS

- Air flow indicatio
- Liquid level
- Draft measurement

SPECIFICATIONS

Service: Compatible gases & liquids.
Wetted Materials: Brass and beryllium copper.
Housing: Drawn steel, black finish
Lens: Polycarbonate (removable).
Accuracy: ±1.5% FS.
Pressure Limit: 100% of range scale.

Temperature Limits: Process: -40 to 160°F (-40 to 70°C); Ambient: -40 to 140°F (-40 to 60°C).
Size: 2.5″ (63 mm).
Process Connections: 1/4″ male NPT.
Enclosure Rating: NEMA 3 (IP54).
Weight: 7.3 oz (0.21 kg).

OPTIONS

Use order code:	Description
NISTCAL-PG1	NIST traceable calibration certificat

MODEL CHART

Model	Range	Model	Range
LPG4-D7122N	-10 to 0 in w.c. (-2.5 to 0 kPa)	**LPG4-D8322N**	0 to 40 in w.c. (0 to 10 kPa)
LPG4-D7222N	-15 to 0 in w.c. (-4 to 0 kPa)	**LPG4-D8422N**	0 to 60 in w.c. (0 to 15 kPa)
LPG4-D7322N	-25 to 0 in w.c. (-6 to 0 kPa)	**LPG4-D8522N**	0 to 80 in w.c. (0 to 20 kPa)
LPG4-D7422N	-40 to 0 in w.c. (-10 to 0 kPa)	**LPG4-D8622N**	0 to 100 in w.c. (0 to 25 kPa)
LPG4-D7522N	-60 to 0 in w.c. (-15 to 0 kPa)	**LPG4-D8722N**	0 to 160 in w.c. (0 to 40 kPa)
LPG4-D7622N	-80 to 0 in w.c. (-20 to 0 kPa)	**LPG4-D8922N**	-4 to 0 to 6 in w.c. (-1 to 0 to 1.5 kPa)
LPG4-D7722N	-100 to 0 in w.c. (-25 to 0 kPa)	**LPG4-D9022N**	-6 to 0 to 10 in w.c. (-1.5 to 0 to 2.5 kPa)
LPG4-D7822N	-160 to 0 in w.c. (-40 to 0 kPa)	**LPG4-D9122N**	-8 to 0 to 16 in w.c. (-2 to 0 to 4 kPa)
LPG4-D7922N	-235 to 0 in w.c. (-60 to 0 kPa)	**LPG4-D9222N**	-16 to 0 to 24 in w.c. (-4 to 0 to 6 kPa)
LPG4-D8022N	0 to 10 in w.c. (0 to 2.5 kPa)	**LPG4-D9322N**	-24 to 0 to 40 in w.c. (-6 to 0 to 10 kPa)
LPG4-D8122N	0 to 15 in w.c. (0 to 3.75 kPa)	**LPG4-D9422N**	-30 to 0 to 50 in w.c. (-7.5 to 0 to 12.5 kPa)
LPG4-D8222N	0 to 25 in w.c. (0 to 6 kPa)	**LPG4-D9522N**	-40 to 0 to 60 in w.c. (-10 to 0 to 15.0 kPa)

USA: California Proposition 65
⚠WARNING: Cancer and Reproductive Harm - www.P65Warnings.ca.gov

SERIES LPG4

2.5″ LOW PRESSURE GAGE

1.5% Full-Scale Accuracy in a 2.5″ Gage

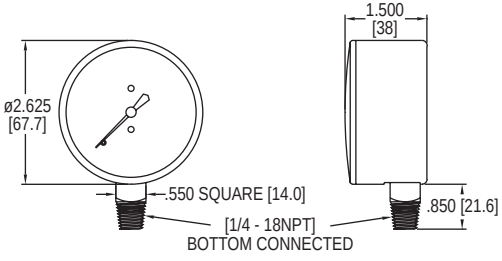

Our **Series LPG4 2.5″ Low Pressure Gage** offers top of the line performance and accuracy for pressure and vacuum applications up to and including 160 in w.c. The LPG4 is constructed from a single beryllium-copper diaphragm affixed to a precision-machined brass plate. This innovative design, together with a high-precision, milled-teeth brass movement and nickel-silver pinion and bearing surface, provide the user with a top of the line low pressure instrument.

FEATURES/BENEFITS

- Low pressure gage provides a selection to meet specific application
- Specifie with high ambient and process temperature ratings mean more robust uses and longer service-life
- High accuracy gage for applications requiring more precise measurement is a concern

APPLICATIONS

- Air flow indicatio
- Liquid level
- Draft measurement

SPECIFICATIONS	
Service: Compatible gases & liquids. **Wetted Materials:** Brass and beryllium copper. **Housing:** Drawn steel, black finish **Lens:** Polycarbonate (removable). **Accuracy:** ±1.5% FS. **Pressure Limit:** 100% of range scale.	**Temperature Limits:** Process: -40 to 160°F (-40 to 70°C); Ambient: -40 to 140°F (-40 to 60°C). **Size:** 2.5″ (63 mm). **Process Connections:** 1/4″ male NPT. **Enclosure Rating:** NEMA 3 (IP54). **Weight:** 7.3 oz (0.21 kg).

OPTIONS	
Use order code:	**Description**
NISTCAL-PG1	NIST traceable calibration certificat

MODEL CHART			
Model	**Range**	**Model**	**Range**
LPG4-D7122N	-10 to 0 in w.c. (-2.5 to 0 kPa)	**LPG4-D8322N**	0 to 40 in w.c. (0 to 10 kPa)
LPG4-D7222N	-15 to 0 in w.c. (-4 to 0 kPa)	**LPG4-D8422N**	0 to 60 in w.c. (0 to 15 kPa)
LPG4-D7322N	-25 to 0 in w.c. (-6 to 0 kPa)	**LPG4-D8522N**	0 to 80 in w.c. (0 to 20 kPa)
LPG4-D7422N	-40 to 0 in w.c. (-10 to 0 kPa)	**LPG4-D8622N**	0 to 100 in w.c. (0 to 25 kPa)
LPG4-D7522N	-60 to 0 in w.c. (-15 to 0 kPa)	**LPG4-D8722N**	0 to 160 in w.c. (0 to 40 kPa)
LPG4-D7622N	-80 to 0 in w.c. (-20 to 0 kPa)	**LPG4-D8922N**	-4 to 0 to 6 in w.c. (-1 to 0 to 1.5 kPa)
LPG4-D7722N	-100 to 0 in w.c. (-25 to 0 kPa)	**LPG4-D9022N**	-6 to 0 to 10 in w.c. (-1.5 to 0 to 2.5 kPa)
LPG4-D7822N	-160 to 0 in w.c. (-40 to 0 kPa)	**LPG4-D9122N**	-8 to 0 to 16 in w.c. (-2 to 0 to 4 kPa)
LPG4-D7922N	-235 to 0 in w.c. (-60 to 0 kPa)	**LPG4-D9222N**	-16 to 0 to 24 in w.c. (-4 to 0 to 6 kPa)
LPG4-D8022N	0 to 10 in w.c. (0 to 2.5 kPa)	**LPG4-D9322N**	-24 to 0 to 40 in w.c. (-6 to 0 to 10 kPa)
LPG4-D8122N	0 to 15 in w.c. (0 to 3.75 kPa)	**LPG4-D9422N**	-30 to 0 to 50 in w.c. (-7.5 to 0 to 12.5 kPa)
LPG4-D8222N	0 to 25 in w.c. (0 to 6 kPa)	**LPG4-D9522N**	-40 to 0 to 60 in w.c. (-10 to 0 to 15.0 kPa)

USA: California Proposition 65
⚠WARNING: Cancer and Reproductive Harm - www.P65Warnings.ca.gov

SCL K07 K08 / K09 / K10 / K11 / K12

MS - SERIES

SN 1810-16 1/2

TECHNICAL CHARACTERISTICS
- Aluminium alloy constuction
- Smooth operation
- High efficiency impeller
- Maintenance free
- Mountable in any position
- Recognized TEFC - cURus motor

OPTIONS
- Special voltages (IEC 38)
- Surface treatments

ACCESSORIES
- Inlet and/or inline filters
- Additional inlet/outlet silencers
- Safety valves
- Flow converting device
- Optional connectors

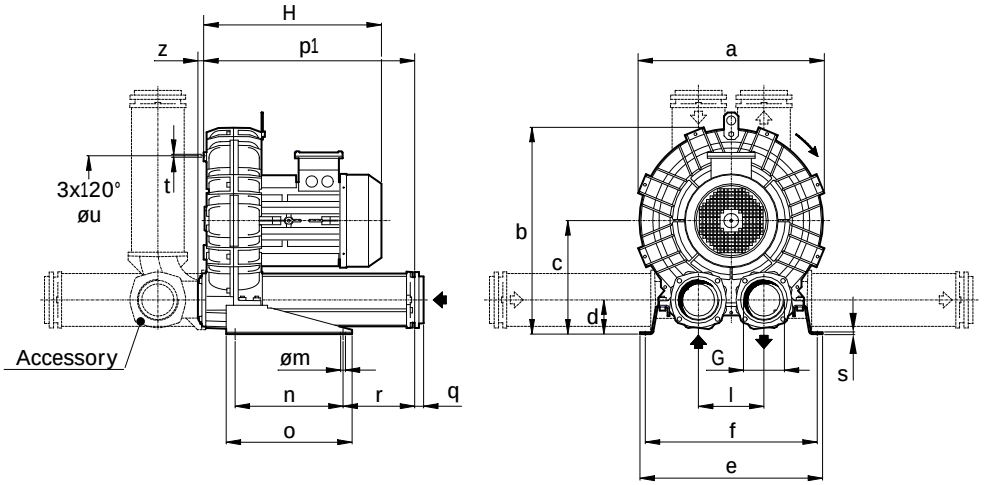

Dimensions in inches.
Dimension for reference only.

Model	a	b	c	d	e	f	G	l	m	n	o	p1	q	r	s	t	u	z
K07-MS	16.69	18.84	10.59	3.23	18.43	17.24	3" NPT	6.10	0.51	11.81	13.78	20.16	0.98	5.39	0.20	M8	11.61	0.63
K08-MS	17.99	19.61	10.59	3.23	18.82	17.64	3" NPT	6.10	0.51	11.81	13.78	20.16	0.98	5.39	0.20	M8	12.2	0.63
K09-MS	19.37	22.09	12.40	3.78	20.00	18.82	4" NPT	7.17	0.51	11.81	13.78	23.07	0.98	7.83	0.20	M8	14.17	0.63
K10 -MS	20.31	22.56	12.40	3.78	20.00	18.82	4" NPT	7.17	0.51	11.81	13.78	23.07	0.98	7.83	0.20	M8	14.17	0.63
K11 -MS	21.34	23.74	13.07	3.58	21.26	20.00	4" NPT	7.87	0.51	11.81	13.78	23.46	0.98	8.03	0.20	M8	15.35	0.63
K12 -MS	21.57	23.82	13.07	3.58	21.26	20.00	4" NPT	7.87	0.51	11.81	13.78	23.58	0.98	8.03	0.20	M8	15.35	0.51

Model	Maximum flow cfm		Installed power Hp		Maximum differential pressure Dp (In Hg)		Noise level Lp dB (A) (1)		Overall dimensions H	Weight
	60 Hz 3500 rpm	50 Hz 2900 rpm	60 Hz 3500 rpm	50 Hz 2900 rpm	60 Hz 3500 rpm	50 Hz 2900 rpm	60 Hz 3500 rpm	50 Hz 2900 rpm	Inches	Lbs
K07-MS	294	243	4	4	3.7	4.6	77.7	75.7	15.45	103.00
			5 ½	5 ½	5.6	6.3	78.0	76.0	15.45	107.10
			7 ½	7 ½	9.6	8.9	78.3	76.3	18.37	145.70
			10	-	11.1	-	78.6	-	18.37	154.50
K08-MS	381	316	5 ½	5 ½	2.9	3.8	78.8	76.8	15.45	115.70
			7 ½	7 ½	5.0	6.6	79.1	77.1	18.37	154.30
			10	10	8.5	9.2	79.4	77.4	18.37	163.10
			15	-	11.1	-	79.7	-	19.15	184.00
K09-MS	471	390	7 ½	7 ½	3.7	4.6	79.3	77.3	18.84	166.50
			10	10	5.9	7.0	79.6	77.6	18.84	175.10
			15	15	10.3	10.4	80.1	78.1	19.63	196.20
			20	-	11.1	-	80.4	-	23.74	269.00
K10 -MS	556	460	7 ½	7 ½	2.7	3.8	79.4	77.4	18.84	170.90
			10	10	4.7	5.9	79.7	77.7	18.84	179.50
			15	15	8.8	9.9	80.2	78.2	19.63	200.60
			20	-	11.1	-	80.5	-	23.74	273.40
K11 -MS	650	539	10	10	2.9	3.9	82.0	80.0	19.04	194.90
			15	15	6.0	7.1	82.5	80.5	19.83	216.00
			20	20	11.1	10.4	83.0	81.0	23.94	288.80
K12 -MS	726	602	15	15	3.8	6.6	83.5	81.5	19.95	223.70
			20	20	6.3	9.6	84.3	82.3	24.06	296.50
			25	-	10.3	-	87.2	-	24.92	320.80

(1) Noise measured at 1 m distance with inlet and outlet ports piped, in accordance to ISO 3744.
- For proper use, the blower should be equipped with inlet filter and safety valve; other accessories available on request.
- Ambient temperature from +5° to +104°F.
- Specifications subject to change without notice.

FPZ, Inc. 150 N. Progress Drive Saukville, WI 53080 USA Tel. (262) 268-0180 usa@fpz.com www.fpz.com

SCL K07 / K08 / K09 / K10 / K11 / K12 MS SERIES

SN 1810-1 6 2/2

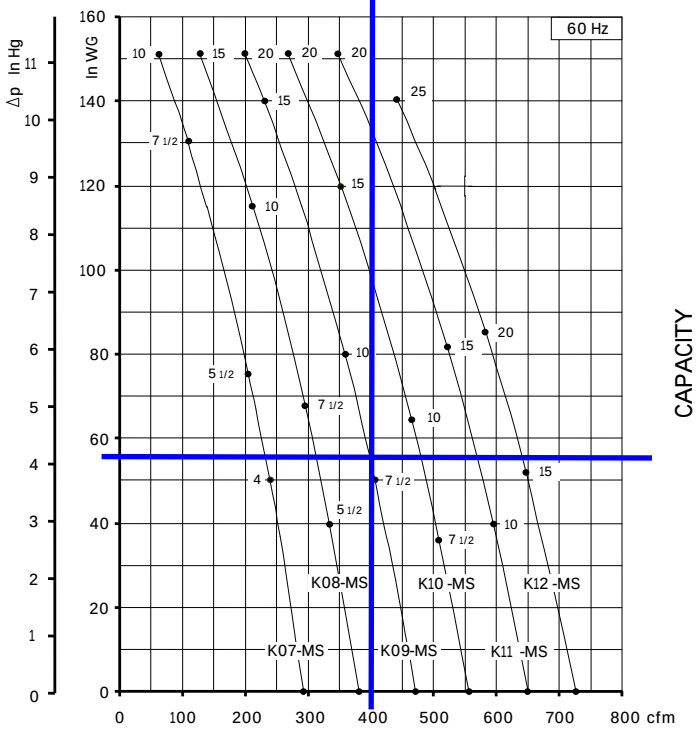

CAPACITY

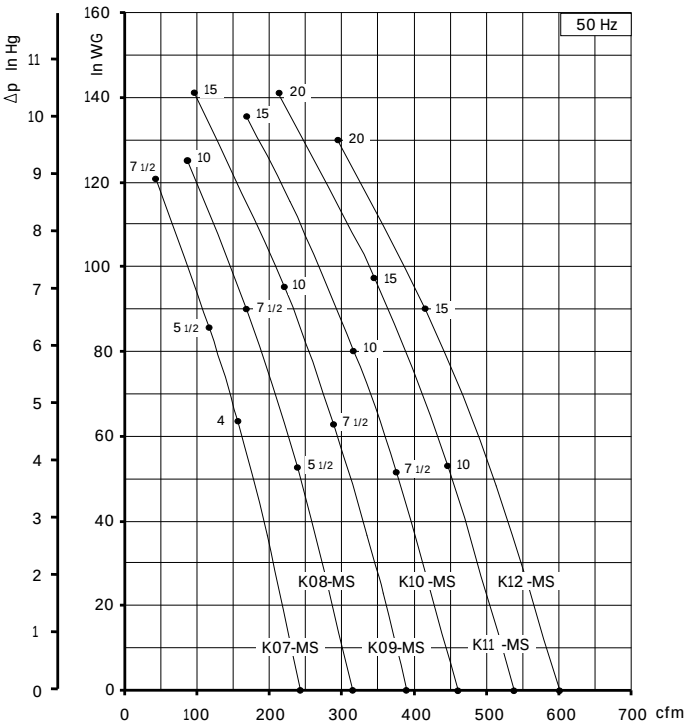

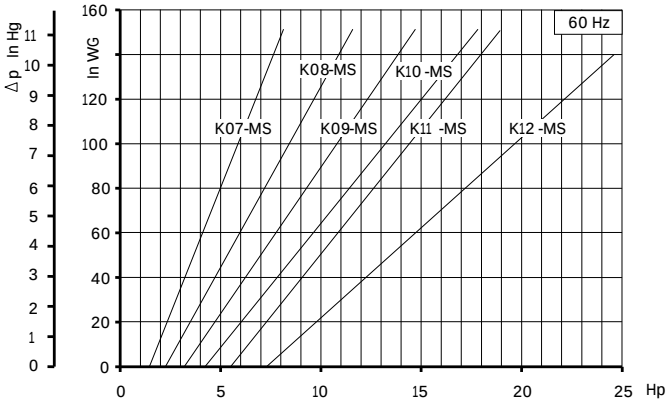

ABSORBED POWER

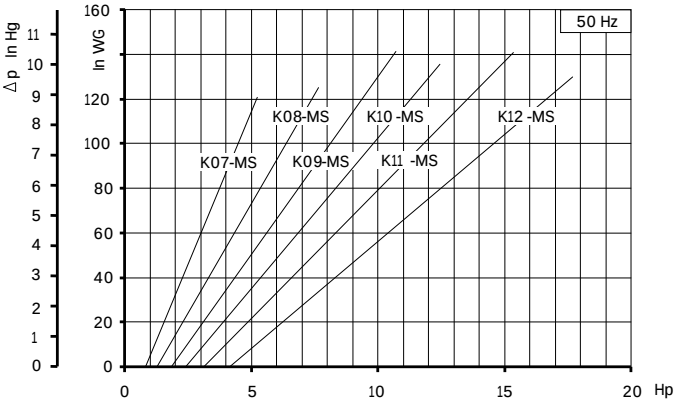

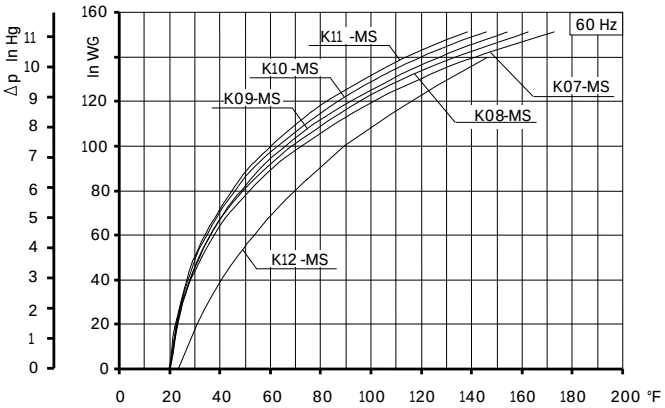

TEMPERATURE INCRESASE

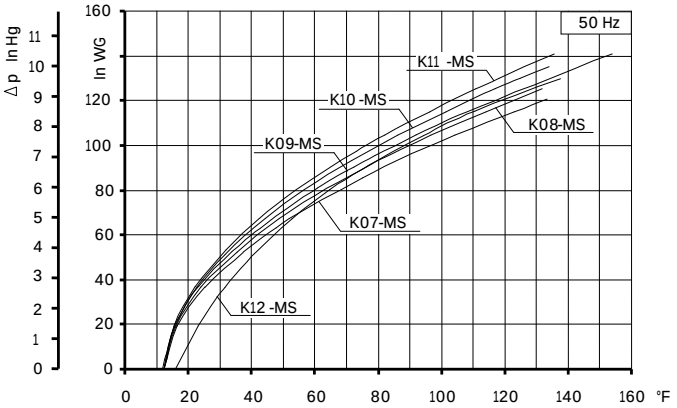

Curves refer to air at 68° F temperature, measured at inlet port and 29.92 In Hg atmospheric backpressure (abs).
Values for flow, power consumption and temperature rise: +/-10% tolerance.
Data subject to change without notice.

FPZ, Inc. 150 N. Progress Drive Saukville, WI 53080 USA Tel. (262) 268-0180 usa@fpz.com www.fpz.com

FPZ BLOWER TECHNOLOGY

SOUND HOOD - IH

VERSION USA

Characteristics

- Noise reduction 10 dB(A) max
- Integral exhaust fan for blower / motor heat dispersion

Std operating condition

- Altitudine less than 3280 ft a.s.l.
- Atmospheric pressure:29.92 in Hg
- Ambient temperature from +5 °F to +104°F

Technical data

ACCESSORIES FOR REGENERATIVE BLOWERS

COMPANY WITH QUALITY MANAGEMENT SYSTEM CERTIFIED BY DNV ISO 9001:2008

FPZ, Inc 150 N. Progress Drive Saukville, WI 53080 USA Tel. +(262) 268-0180 usa@fpz.com www.fpz.com

SOUND HOOD

IH

IH7R-IH7-IH9-IH10-IH13

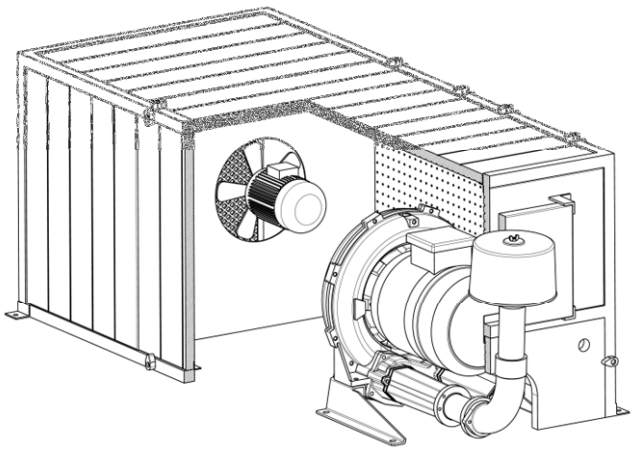

Scl performances inside the sound hood IH7R-IH7-IH9-IH10-IH13

- Ambient Temperature From +86°F To +104°F
  - Reduce by 10% the max differential pressure from the value stated in the data sheet

Sound hood characteristics IH7R-IH7-IH9-IH10-IH13

- Noise reduction 10 dB(A) max.
- Support in aluminium blocks
- Removable panels with block-panel system
- Complete with axial fan

Fan motor details IH7R-IH7-IH9-IH10-IH13		
Frequency (Hz)	50	60
Power (kW)	0.12	0.144
Voltage (V ±10%)	230/400	265/460
Cos ø	0.67	0.66
Nominal current (A)	0.80/0.46	
Poles	2	
Protection	IP 55	
Insulation	Class F	

DIMENSIONS (IH7R-IH7-IH9-IH10-IH13)

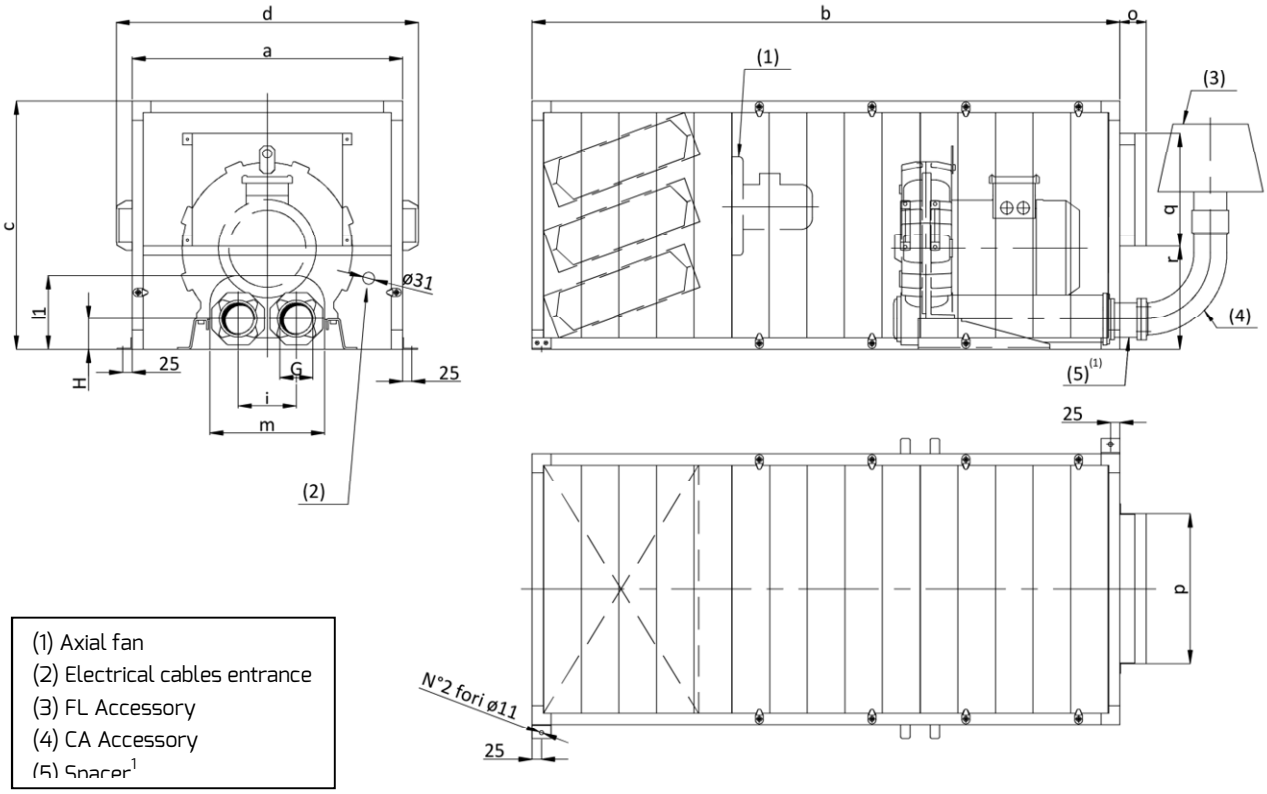

(1) Axial fan
(2) Electrical cables entrance
(3) FL Accessory
(4) CA Accessory
(5) Spacer[1]

Dimensions in inches - FOR REFERENCE ONLY

Mod	SCL	Spacer [1]	a	b	c	d	G	H	i	l1	m	o	p	q	r	lbs
IH7R	K07R-MD	1035K0710840	28.35	61.60	26.00	31.70	2"NPT	3.23	6.10	6.30	10.63	2.75	15.75	11.80	11.00	141
	K08R-MD	1035K0710840														
IH7	K07-MS	-	28.35	61.60	26.00	31.70	3"NPT	3.23	6.10	7.75	12.00	2.75	15.75	11.80	11.00	141
	K75-MS	-														
	K08-MS	103520100001[2]														
IH9	K07-TS	-	28.35	61.60	26.00	31.70	4"NPT	3.86	7.16	8.86	14.76	2.75	15.75	11.80	11.00	141
	K08-TS	-														
IH10	K09-MS/MD	-	28.35	63.60	30.00	31.70	4"NPT	3.78	7.16	8.86	14.76	3.54	17.70	15.35	11.00	203
	K10-MS/MD	-														
	K11-MS/MD	1035k0970001[3]						3.58	7.87							
	K12-MS/MD	1035k0970001[3]														
IH13	K09-TS	-	28.35	63.60	31.50	31.70	5.12	4.17	8.27	10.00	17.32	3.54	17.70	15.35	12.20	207
	K10-TS	-														
	K11-TS[4]	-							9.00							
	K12-TS[4]	-														

[1] necessary for the use of "FL" filter
[2] necessary for scl K08-MS with 15Hp motor only
[3] necessary for scl K11/K12-MS with 25Hp motor only
[4] not applicable with 30Hp motor

MOISTURE SEPARATOR

GENERAL THEORY

The moisture separator removes liquids from the process stream in soil venting applications to help protect the blower from corrosion and mineral deposits caused by water.

DESIGN INFORMATION

NES moisture separators operate on the principles of cyclonic section aided by velocity reduction. The moisture separator inlet pipe is set tangential to the tank wall, a stringer pipe extends down past the separator inlet is placed in the center of the tank. The moisture laden air stream is forced into a cyclonic rotation. The centrifugal force produced throws the water droplets to the outer wall of the separator where they fall and collect at the bottom. Additional efficiency is produced when the velocity is reduced to values between 1500 fpm and 6000 fpm. For a separator of this type, moisture separation efficiency is typically 95% or greater for moisture droplets greater than 10 micron.

CONSTRUCTION

NES moisture separators are constructed of carbon steel with bronze drain valves, removable lid with EPDM gasket, mechanical ball and float assembly standard for drum style separators. Sight glass, emergency high-level switch and pump out switches are optional. Tank style separators are standard with carbon steel construction, bronze drain valves, flanged clean-out port, sight glass and emergency high level switch. Pump-out switches and mist eliminator are optional. All separators are primed and coated with a rust inhibitor to prevent corrosion.

National Environmental Systems
Phone 508-226-1100 Fax 508-226)-1180 84 Dunham Street Attleboro, MA 02703
www.nes-inc.biz

Tank Style Moisture Separator

* 120 gallon total capacity
* Carbon Steel construction, exterior primed & painted
* 4" MNPT Tangential Inlet - Vapor
* Demister
* 4" FNPT Outlet - Vapor
* 2" Clear PVC Sight Glass
* Clean-out Man-way
* 1" Ball drain valve
* 2" MPT Pump Out - Liquid
* (3) Position High Level Switch

National Environmental Systems
Phone 508-226-1100 Fax 508-226)-1180 84 Dunham Street Attleboro, MA 02703
www.nes-inc.biz

TECHNICAL BROCHURE

BNPE R6

NPE

316L SS

NPE SERIES END SUCTION CENTRIFUGAL PUMPS

BOMBAS CENTRÍFUGAS DE SUCCIÓN FINAL SERIE NPE

BUILT IN THE USA
ENGINEERED, ASSEMBLED & TESTED

GOULDS WATER TECHNOLOGY

a xylem brand

A FULL RANGE OF PRODUCT FEATURES
UNA GAMA TOTAL DE CARACTERÍSTICAS DEL PRODUCTO

Superior Materials of Construction: Complete AISI 316L stainless steel liquid handling components and mounting bracket for corrosion resistance, quality appearance, and improved strength and ductility.

Materiales Superiores de Construcción: *Componentes completos para manejo de líquidos en acero inoxidable AISI 316L y consola para el montaje para resistencia a la corrosión, apariencia de calidad, y fuerza y ductilidad mejoradas.*

High Efficiency Impeller: Enclosed impeller with unique floating seal ring design maintains maximum efficiencies over the life of the pump without adjustment.

Impulsor de Eficiencia Superior: *El impulsor encerrado con un diseño único de anillo del sello flotante, mantiene sin ajustes, la eficiencia máxima sobre la vida de la bomba.*

Casing and Adapter Features: Stainless steel construction with NPT threaded, centerline connections, easily accessible vent, prime and drain connections with stainless steel plugs. Optional seal face vent/flush available.

Características de la Carcasa y del Adaptador: *Construcción en acero inoxidable con NPT roscado, conexiones centrales, válvulas de fácil acceso, conexiones de cebado y drenaje con enchufes de acero inoxidable. Cara del sello válvula/chorro opcional disponible.*

Mechanical Seal: Standard John Crane Type 21 with carbon versus silicon-carbide faces, Viton elastomers, and 316 stainless metal parts. Optional high temperature and chemical duty seals available.

Sello Mecánico: *Estándar John Crane Tipo 21 con carbón en contraste con caras de silicón-carbide, elastómeros de Viton, y partes metálicas de acero inoxidable 316. Sellos de alta temperatura y productos químicos están disponibles.*

Motors: NEMA standard open drip-proof, totally enclosed fan cooled or explosion proof enclosures. Rugged ball bearing design for continuous duty under all operating conditions.

Motores: *Estándar NEMA a prueba de goteo, ventilador totalmente encerrado o recintos a prueba de explosión. Diseño robusto de balineras de bolas para trabajo continuo en todas las condiciones de funcionamiento.*

DRINKING WATER
NSF/ANSI 61 & 372

NSF 61 Certification: Pumps assembled at the factory are certified to the NSF/ANSI 61 Drinking Water System Components Standard.

Certificación del NSF 61: *Las bombas ensambladas en la fábrica se certifican a los componentes de consumición del circuito de agua de NSF/ANSI 61 estándar.*

* Premium efficiency where required by Department of Energy regulations.

** Eficacia superior donde se requiera por el Ministerio de regulaciones de la Energía.*

The various versions of the NPE are identified by a product code number on the pump label. This number is also the catalog number for the pump. The meaning of each digit in the product code number is shown at left.

Las diferentes versiones de la NPE se identifican con un número de código del producto en la etiqueta de la bomba. Este número es también el número del catálogo para la bomba. El significado de cada dígito en el número de código del producto se muestra a la izquierda.

NPE PRODUCT LINE NUMBERING SYSTEM
LÍNEA DE PRODUCTO NPE SISTEMA DE NUMERACIÓN

Example Product Code, *Ejemplo Código del Producto*

1 ST 2 C 1 A 4 F R

Casing Rotation, Optional
R = 3 o'clock L = 9 o'clock
B = 6 o'clock

NOTE: Rotation when viewed from suction end of pump. Standard discharge position is 12 o'clock.

Rotación de la cubierta, opcional
R = 3 hora L = 9 hora
B = 6 hora

NOTA: *Rotación cuando está visto del extremo de la succión de la bomba. La posición estándar de la descarga es las 12.*

Seal Vent/Flush Option,
Opción de Sello Válvula/ChorroSeal Ven

Mechanical Seal and O-ring
4 = Pre-engineered standard
For optional mechanical seal modify catalog order no. with seal code listed below.

Sello Mecánico y Anillo 'O'
4 = Estándar aprobado
Para sello mecánico opcional modificar el número de orden del catálogo con el código del sello anotado abajo.

John Crane Type 21 Mechanical Seal (⅝" seal), *Sello Mecánico John Crane Tipo 21 (sello de ⅝")*

Seal Code, *Código del Sello*	Rotary, *Rotativo*	Stationary, *Estacionario*	Elastomers, *Elastómeros*	Metal Parts, *Partes Metálicas*	Part No., *Pieza Número*
2	Carbon, *Carbone*	Silicon Carbide, *Carburo de silicona*	EPR	316 SS, *316 Acero inoxidable*	10K18
4			Viton		10K55
5	Silicon Carbide		EPR		10K81
6			Viton		10K62
8*			EPR		10K167
9	Carbon	Ceramic	Teflon		10K52

* This is a JC Type 2100 unitized seal ideal for glycol applications.

Impeller Option . . . No Adder Required
For optional impeller diameters modify catalog order no. with impeller code listed. Select optional impeller diameter from pump performance curve.

Código del Impulsor Opcional
Para impulsores con diámetros opcionales modificar el número de orden del catálogo con el código del impulsor anotado. Escoger el impul con diámetro opcional de la curva de funcionamiento de la bomba.

Impeller Code, *Código del impulsor*	Pump Size, *Tamaño de la bomba*		
	1 x 1¼ – 6	1¼ x 1½ – 6	1½ x 2 – 6
	Diameter	Diameter	Diameter
K	–	6⅛	–
G	–	5 15/16	5⅜
H	–	5½	5
A	6⅛	5¼	4¾
B	5¾	5 1/16	4⅝
C	5 3/16	4⅞	4⅜
D	4¾	4⅝	4 1/16
E	4 7/16	4¼	3⅝
F	4 1/16	3⅞	–

Driver, *Conductor*
1 = 1 PH, ODP
2 = 3 PH, ODP
3 = 575 V, ODP
4 = 1 PH, TEFC
5 = 3 PH, TEFC
6 = 575 V, TEFC
7 = 3 PH, XP
8 = 575 V, XP
9 = 3 PH, TE PE
0 = 1 PH, XP
A = 3 PH, ODP PE
B = 3 PH, 575 ODP PE
C = 3 PH, 575 TE PE
D = 3 PH, XP PE
E = 3 PH, WD PE
F = 1 PH, ODP PE
G = 1 PH, TEFC PE
H = 1 PH, XP PE

HP Rating, *HP Potencia*
C = ½ HP E = 1 HP G = 2 HP J = 5 HP
D = ¾ HP F = 1½ HP H = 3 HP

Driver: Hertz/Pole/RPM,
Conductor: Hercios/Polo/RPM
1 = 60 Hz, 2 pole, 3500 RPM
2 = 60 Hz, 4 pole, 1750 RPM
3 = 60 Hz, 6 pole, 1150 RPM
4 = 50 Hz, 2 pole, 2900 RPM
5 = 50 Hz, 4 pole, 1450 RPM

For frame mounted version, substitute the letters "FRM" in these positions.
Para la versión con el armazón montado, sustituya las letras "FRM" en estas posiciones.

Material
ST = Stainless steel *Acero inoxidable*

Pump Size, *Tamaño de la Bomba*
1 = 1 x 1¼ – 6 2 = 1¼ x 1½ – 6 3 = 1½ x 2 – 6

PERFORMANCE COVERAGE (60 HZ)
ALCANCE DE FUNCIONAMIENTO (60 HZ)

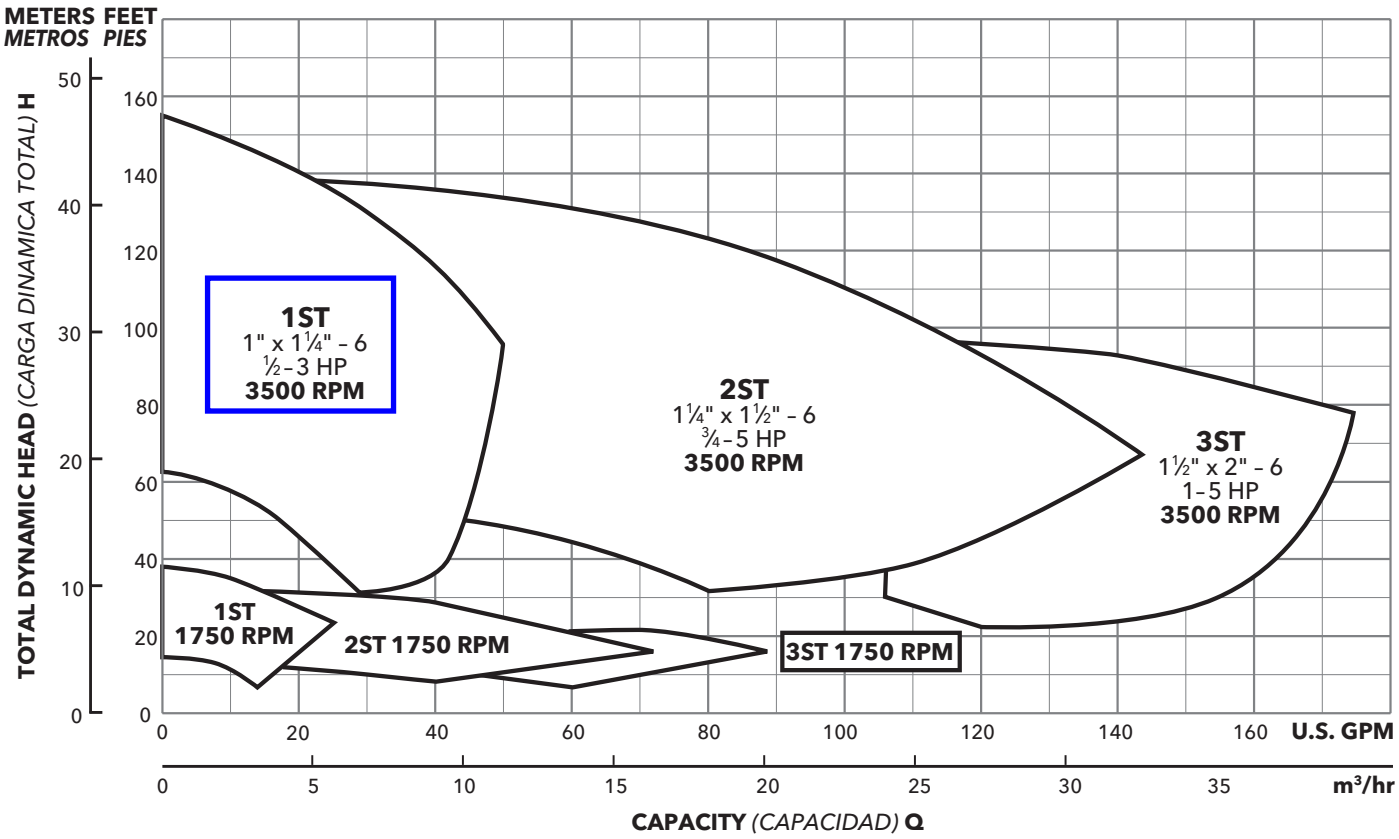

NOTES:
Not recommended for operation beyond printed H-Q curve.

For critical application conditions consult factory.

Not all combinations of motor, impeller and seal options are available for every pump model. Please check with G&L on non-cataloged numbers.

All standard 3500 RPM ODP* and TEFC* motors supplied by Goulds Water Technology, have minimum of 1.15 service factor. Standard catalog units may utilize available service factor. Any motors supplied other than Goulds Water Technology check available service factor.

* Premium efficiency where required by Department of Energy regulations.

NOTAS:
No se recomienda para funcionamiento superior al impreso en la curva H-Q.

Para condiciones de aplicaciones críticas consultar con la fábrica.

No todas las combinaciones de las opciones de motor, impulsor y sello están disponibles para cada modelo de bombas. Por favor verifique con G&L en los números no catalogados.

Todos los motores estándar de 3500 RPM, ODP (abiertos resguardados) y TEFC* (totalmente encerrados con enfriamiento forzado) provistos por Goulds Water Technology tienen un factor mínimo de servicio de 1,15. Las unidades estándar de catálogo pueden utilizar el factor de servicio disponible. Verificar el factor de servicio disponible de todo motor no provisto por Goulds Water Technology.*

** Eficacia superior donde se requiera por el Ministerio de regulaciones de la Energía.*

NPE CLOSE COUPLED PUMP MAJOR COMPONENTS: MATERIALS OF CONSTRUCTION
BOMBA CERRADA ACOPLADA NPE COMPONENTES PRINCIPALES: MATERIALES DE CONSTRUCCIÓN

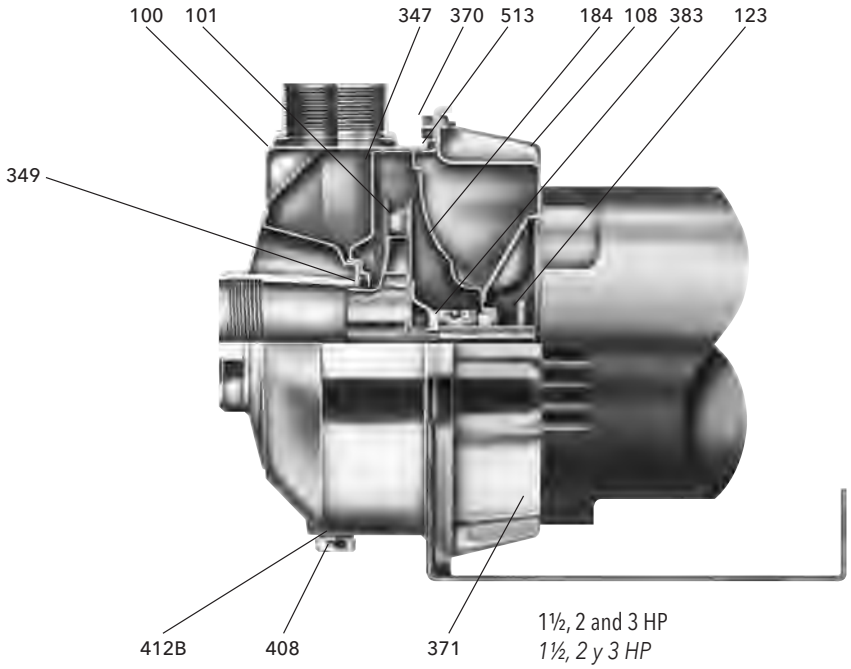

1½, 2 and 3 HP
1½, 2 y 3 HP

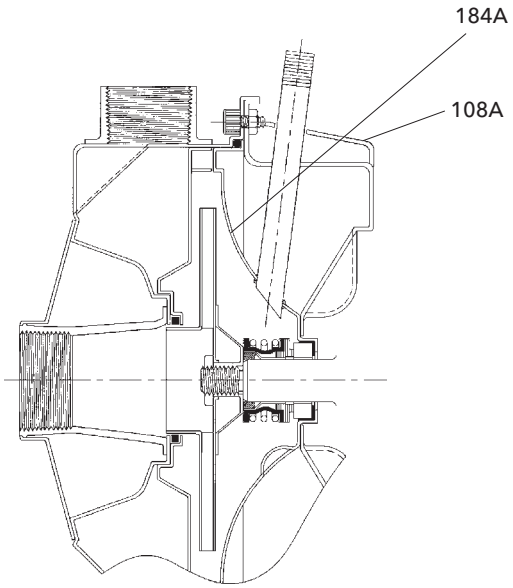

Seal Face Vent/Flush Option,
Opción Cara del Sello Válvula/Chorro

Item No., *Parte No.*	**Description, *Descripción***	**Materials, *Materiales***
100	Casing; *Carcasa*	AISI 316L SS; *AISI 316L Acero inoxidable*
101	Impeller; *Impulsor*	
108	Motor adapter; *Adaptador del motor*	
108A	Motor adapter seal vent/flush; *Sello válvula/chorro del adaptador del motor*	
123	Deflector; *Deflector*	BUNA-N
184	Seal housing; *Alojamiento del sello*	AISI 316L SS; *AISI 316L Acero inoxidable*
184 A	Seal housing seal vent/flush; *Sello válvula/chorro del alojamiento del sello*	
347	Guidevane; *Difusor*	
349	Seal ring, guidevane; *Anillo del sello, difusor*	Viton
370	Socket head screws, casing; *Encajes cabezas de tornillos, carcasa*	AISI 410 SS; *AISI 410 Acero inoxidable*
371	Bolts, motor; *Tornillos, motor*	Plated steel; Acero chapeado
383	Mechanical seal; *Sello mecánico*	**see chart, *ver tabla*
408	Drain and vent plug, casing; *Enchufes de drenaje y válvula, carcasa*	AISI 316L SS; *AISI 316L Acero inoxidable*
412B	O-ring, drain and vent plug; *Anillo 'O', enchufe de drenaje y válvula*	Viton (Standard, *estándar*) EPR (Optional, *Opcional*)
513	O-ring, casing; *Anillo 'O', carcasa*	
Motor *Motor*	NEMA standard, 56J flange; *NEMA estándar, brida 56J*	

½, ¾ and 1 HP
½, ¾ y 1 HP

Footed motor for 5 HP ODP* and TEFC*, all explosion proof motors, see page 13.

Motor con pie para 5 HP ODP y TEFC*, a prueba de explosiones motores, en la página 13.*

* Premium efficiency where required by Department of Energy regulations.

Eficacia superior donde se requiera por el Ministerio de regulaciones de la Energía.

PERFORMANCE CURVES – 60 HZ, 3500 RPM
CURVAS DE FUNCIONAMIENTO – 60 HZ, 3500 RPM

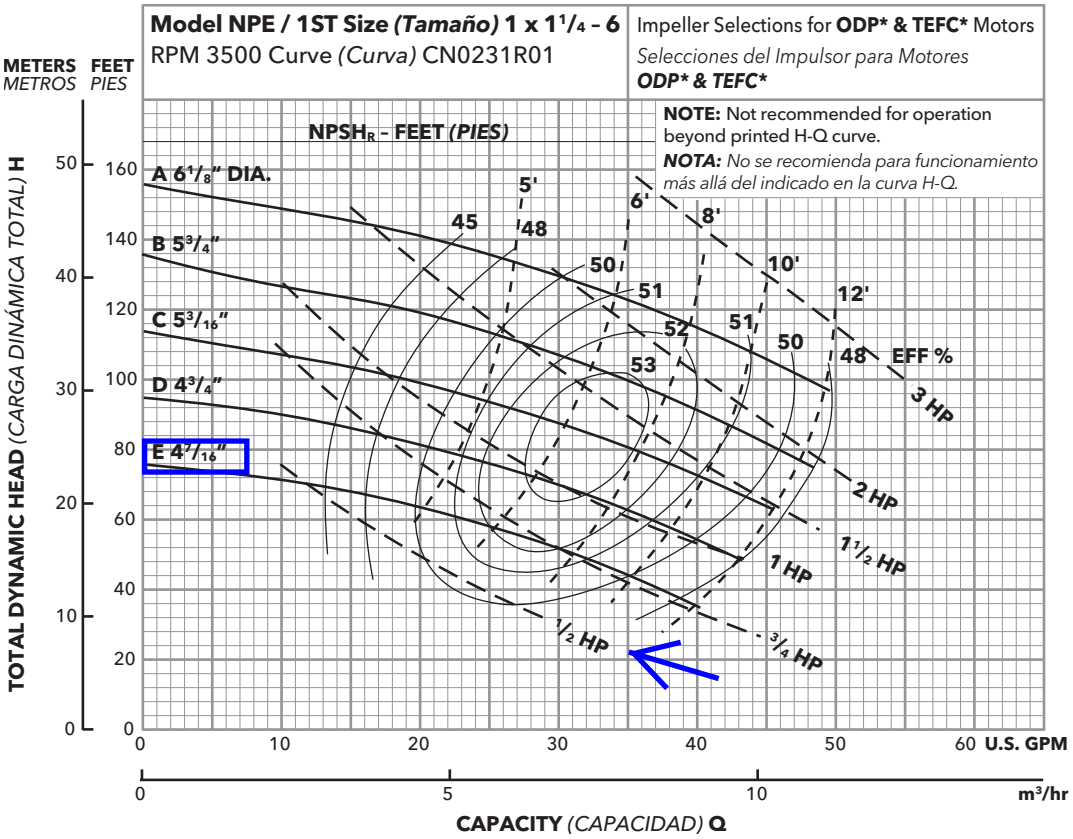

Ordering Code, *Código de Pedido*	Standard HP Rating, *Estándar HP Potencia*	Imp. Dia.
E	½	4 7/16"
D	¾	4¾
C	1	5 3/16
B	1½	5¾
A	2	6⅛

NOTE: Although not recommended, the pump may pass a 1/16" sphere.

NOTA: *Si bien no se recomienda, la bomba puede pasar una esfera de 1/16".*

* Premium efficiency where required by Department of Energy regulations.

* *Eficacia superior donde se requiera por el Ministerio de regulaciones de la Energía.*

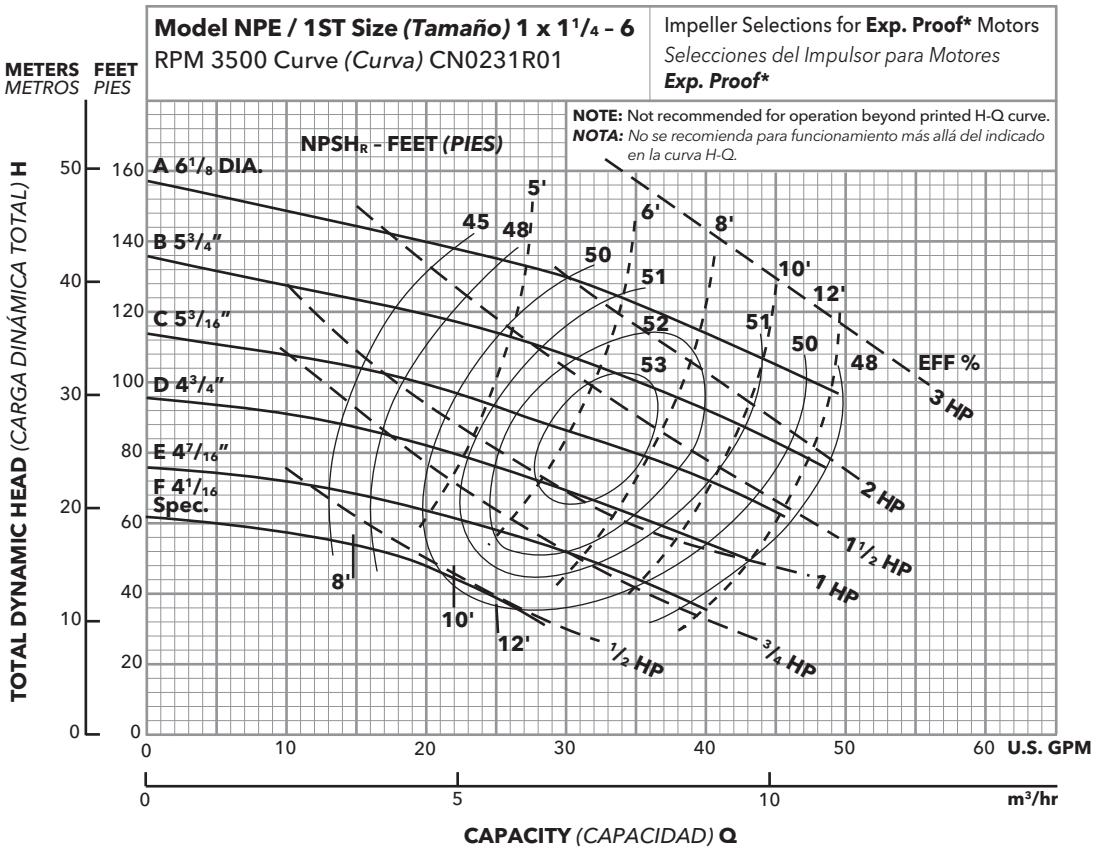

Ordering Code, *Código de Pedido*	Standard HP Rating, *Estándar HP Potencia*	Imp. Dia.
F	½	4 1/16" spec.
E	¾	4 7/16
D	1	4¾
C	1½	5 3/16
B	2	5¾
A	3	6⅛

NOTE: Although not recommended, the pump may pass a 1/16" sphere.

NOTA: *Si bien no se recomienda, la bomba puede pasar una esfera de 1/16".*

* Premium efficiency where required by Department of Energy regulations.

* *Eficacia superior donde se requiera por el Ministerio de regulaciones de la Energía.*

NPE CLOSE COUPLED – DIMENSIONS, WEIGHTS AND SPECIFICATIONS
NPE ACOPLE CERRADO – DIMENSIONES, PESOS Y ESPECIFICACIONES

Clockwise Rotation Viewed from Drive End
Rotación en Dirección de las Agujas del Reloj Visto desde el Extremo del Motor

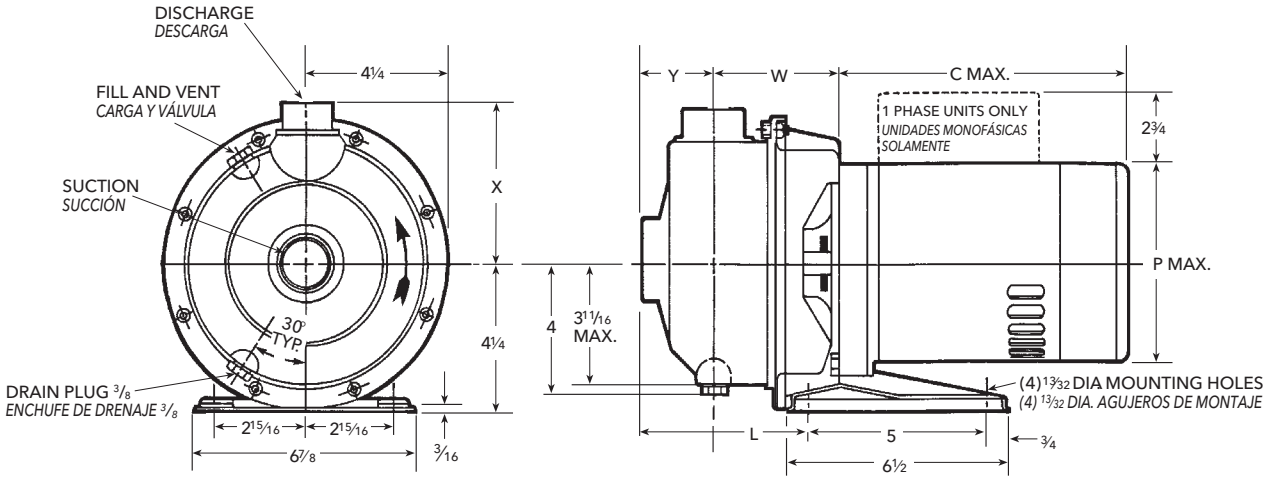

ODP* and TEFC* ½, ¾ and 1 HP (standard), *ODP* y TEFC* ½, ¾ y 1 HP (estándar)*

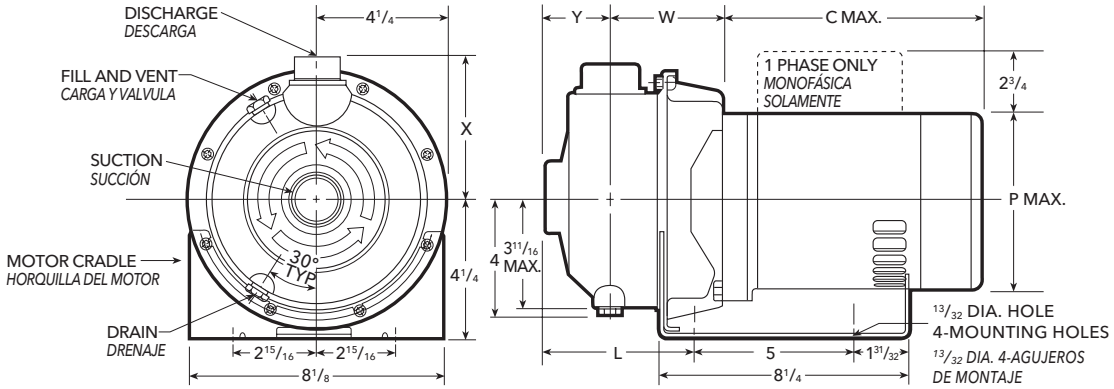

ODP* and TEFC* 1½, 2 and 3 HP (standard), *ODP* y TEFC* 1½, 2 y 3 HP (estándar)*

SPECIFICATIONS - *ESPECIFICACIONES*

Capacities to:
85 GPM (322L/min) at 1750 RPM
170 GPM (643L/min) at 3500 RPM

Heads to:
39 feet (12 m) at 1750 RPM
150 feet (46 m) at 3500 RPM

Working pressures to:
125 PSIG (9 bars)

Maximum temperatures to:
250° F (121° C)

Direction of rotation:
Clockwise when viewed from motor end.

Motor specifications:
NEMA 56J frame, 1750 RPM, ½ HP. 3500 RPM ½ through 5 HP. Open drip-proof, totally enclosed fan-cooled or explosion proof enclosures*. Stainless steel shaft with ball bearings.

Single phase: Voltage 115/230 ODP* and TEFC*. (3 and 5 HP model – 230 V only) Built-in overload with auto-reset provided.

Three phase: Voltage 208-230/460 ODP*, TEFC* and EX PROOF*.

NOTE: For three phase motors, overload protection must be provided in starter unit. Starter and heaters must be ordered separately.

* Premium efficiency where required by Department of Energy regulations.

Capacidades:
85 GPM (322L/min) a 1750 RPM
170 GPM (643L/min) a 3500 RPM

Cargas:
39 pies (12 m) a 1750 RPM
150 pies (46 m) a 3500 RPM

Presión de trabajo:
125 PSIG (9 baras)

Temperatura máxima:
250 ° F (121 ° C)

Dirección de rotación:
En dirección de las agujas del reloj visto desde el extremo final del motor.

Motores:
Armazón 56J NEMA, 1750 RPM ½ HP. 3500 RPM ½ a 5 HP. Cubiertas abiertas resguardadas, totalmente encerradas enfriadas por ventilador o a prueba de explosiones. Eje de acero inoxidable con balineras de bolas.*

Monofásicos: *Voltaje 115/230 ODP* y TEFC*. (modelo 3 y 5 HP – 230 voltios solamente) Se proporciona protección térmica contra sobrecarga construida con reseteo automático.*

Trifásicos: *Voltaje 208-230/460 ODP*, TEFC* y EX PROOF*.*

NOTA: *Para motores trifásicos se debe de proporcionar la protección térmica contra sobrecarga en la unidad de arranque. El arrancador y los calentadores se deben pedir por separado.*

** Eficacia superior donde se requiera por el Ministerio de regulaciones de la Energía.*

Dimensions and Weights
Dimensiones y Pesos

Dimensions and Weights – Determined by Pump,
Dimensiones y Pesos – Determinados por la Bomba

Pump, *Bomba*	Suct. NPT, *Succión NPT*	Disch. NPT, *Descarga NPT*	CP	L	W	X	Y	Wt., *Peso*	Dim. "HL" Determined by Pump and Motor, *Dim. "HL" Determinadas por la Bomba y el Motor* Frame, *Armazón* 56	140	180
1ST	1¼	1	12 15/16	6 7/16	3 5/16	4⅜	2	22½	4 9/16		6 7/16
2ST	1½	1¼	13½	7	3¾	4½	2 1/8	23	5⅛		7
3ST	2	1½				4⅝					

Available Motor and Bedplate Dimensions and Weights,
Pesos y Dimensiones Disponibles de la Fundación y del Motor

Motor Frame, *Armazón del Motor*	HA	HB	HD	HE	HF	HG	HP	Wt. Max., *Peso Máx*	Shims, *Deflector*
56 143T 145T	8	26	6⅞	3⅛	22⅜	2⅜	1	30	1"
182T 184T	10	26	7¼	3¾	24	2¾	⅞	43	–

Frame Size, *Tamaño del Armazón*	Horsepower, *Fuerza* 3500 RPM Single Phase, *Monofásicos* ODP	TEFC	Three Phase, *Trifásicos* ODP	TEFC	C Max.	Wt. Max., *Peso Máx.*	P Max.
56	½ – 1½	½ – 1½	½ – 1	½ – 1	10 13/16	37	7 3/16
143T	–	–	1½	1½	9 13/16	41	7 3/16
145T	2	2	1½ – 3	1½ – 2	11 11/16	52	7 3/16
182T	3	3	5	3	12 3/16	76	7⅞
184T	5	5	–	5	15⅛	117	10¼

NOTES:

1. Pump will be shipped with top vertical discharge position as standard. For other orientations, remove casing bolts, rotate discharge to desired position, replace and tighten 6mm bolts to 5 – 6 lbs.-ft.
2. Motor dimensions may vary with motor manufacturers.
3. Dimensions in inches, weights in pounds.
4. For explosion proof* motor dimensions consult factory for information.
5. Not to be used for construction purposes unless certified.

NOTAS:

1. *Las bombas se transportarán con la descarga vertical superior como estándar. Para otras orientaciones, retirar los tornillos de la carcasa, rotar la descarga a la posición deseada, y reemplazar y apretar los tornillos de 6mm a 5 – 6 libras-pies.*
2. *Las dimensiones del motor puede que varíen con los fabricantes.*
3. *Dimensiones en pulgadas, pesos en libras.*
4. *Para las dimensiones de los motores a prueba de explosión* consultar con la fábrica para información.*
5. *No usar para propósitos de construcción sin certificar.*

* Premium efficiency where required by Department of Energy regulations.

* *Eficacia superior donde se requiera por el Ministerio de regulaciones de la Energía.*

ACCESSORIES

Safety Valves

SS1401

The following table is a guide to select the appropriate safety valve. The selections in the table are based on blowers operating at 60 Hz - for 50 hz applications refer to the safety valve data sheets. To select the appropriate safety valve, determine the blower model, horsepower, and whether it is to be used for vacuum or pressure service. If it is desirable to have the valve activate at lower pressures than the maximum rated pressure or vacuum of the blower, a different safety valve might be required (refer to safety valve data sheets). In some cases, two valves are required. FPZ valves are supplied uncalibrated. All safety valves include detailed instructions on how to calibrate and install the valve.

Single Stage Blowers			
Model	HP	Safety Valve Vacuum	Safety Valve Pressure
K03-MS	3/4	VRL6	VRL6
K04-MS	ALL	VRL6	VRL6
K05-MS	ALL	VRL6	VRL6
K06-MS	3	VRL6	VRL8
K06-MS	4	VRL6	VRL6
K06-MS	5 1/2	VRL6	VRL6
K06-MS	6 1/5	VRL6	VRL6
K07-MS	4	VRL8	VRL8
K07-MS	5 1/2	VRL6	VRL8
K07-MS	7 1/2	VRL6	VRL6
K07-MS	10	VRL6	VRL6
K08-MS	5.5	VRL8	VRL9
K08-MS	7 1/2	VRL8	VRL8
K08-MS	10	VRL6	VRL8
K08-MS	15	VRL6	VRL6
K09-MS	7 1/2	VRL9	VRL9
K09-MS	10	VRL8	VRL8
K09-MS	15	VRL6	VRL8
K09-MS	20	VRL6	VRL6
K10-MS	7 1/2	VRL9	VRL9
K10-MS	10	VRL9	VRL9
K10-MS	15	VRL8	VRL8
K10-MS	20	VRL6	VRL8
K10-MS	25	-	VRL6
K11-MS	10	VRL9	VRL9
K11-MS	15	VRL9	VRL9
K11-MS	20	VRL8	VRL8
K11-MS	25	VRL8	VRL8
K12-MS	15	VRL9	VRL9
K12-MS	20	VRL9	VRL9
K12-MS	25	VRL8	VRL8
K05-TS	ALL	VRL8	VRL8
K06-TS	5 1/2	VRL9	VRL9
K06-TS	7 1/2	VRL8	VRL8
K06-TS	10	VRL6	VRL8
K07-TS	7 1/2	VRL9	VRL9
K07-TS	10	VRL9	VRL9
K07-TS	15	VRL8	VRL8
K08-TS	7 1/2	N.A	N.A.
K08-TS	10	VRL9	(2) VRL9
K08-TS	15	VRL9	VRL9
K09-TS	15	(2) VRL9	(2) VRL9
K09-TS	20	VRL9	VRL9
K09-TS	25	VRL8	VRL9
K10-TS	15	(2) VRL9	(2) VRL9
K10-TS	20	(2) VRL9	(2) VRL9
K10-TS	25	VRL9	VRL9
K11-TS	25	(2) VRL9	(2) VRL9
K11-TS	30	(2) VRL9	(2) VRL9
K12-TS	30	(3) VRL9	(3) VRL9

Two Stage Blowers			
Model	HP	Safety Valve Vacuum	Safety Valve Pressure
15DH	ALL	VRL6	VRL6
R20-MD	ALL	VRL6	VRL6
30DH	ALL	VRL6	VRL6
40DH	ALL	VRL6	VRL6
K07-MD	3	VRL6	VRL6
K07-MD	4	VRL6	VRL6
K07-MD	5 1/2	VRL6	VRL6
K07-MD	7 1/2	VRL6	VRL6-HP
K08-MD	5 1/2	VRL6	VRL6
K08-MD	7 1/2	VRL6	VRL6
K08-MD	10	VRL6	VRL6
K08-MD	15	-	VRL6-HP
K09-MD	5 1/2	VRL8	VRL8
K09-MD	7 1/2	VRL6	VRL6
K09-MD	10	VRL6	VRL6
K09-MD	15	-	VRL6-HP
K10 -MD	7 1/2	VRL8	VRL8
K10-MD	10	VRL6	VRL6
K10-MD	15	VRL6	VRL6
K10-MD	20	-	VRL6-HP
K11-MD	10	VRL8	VRL8
K11-MD	15	VRL6	VRL8
K11-MD	20	VRL6	VRL6-HP
K11-MD	25	-	VRL6-HP
K12-MD	15	VRL8	VRL8
K12-MD	20	VRL6	VRL6
K12-MD	25	-	VRL6-HP
K04-TD	2	VRL6	VRL6
K04-TD	3	VRL6	VRL6
K05-TD	3	VRL6	VRL6
K05-TD	4	VRL6	VRL6
K05-TD	5 1/2	VRL6	VRL6
K06-TD	5 1/2	VRL6	VRL8
K06-TD	7 1/2	VRL6	VRL6
K06-TD	10	VRL6	VRL6
K07-TD	7 1/2	VRL8	VRL8
K07-TD	10	VRL6	VRL6
K07-TD	15	VRL6	VRL6
K08-TD	7 1/2	VRL8	VRL8
K08-TD	10	VRL8	VRL8
K08-TD	15	VRL6	VRL6
K09-TD	20	VRL6	VRL8
K09-TD	25	VRL6	VRL6
K10-TD	15	VRL9	VRL9
K10-TD	20	VRL8	VRL8
K10-TD	25	VRL6	VRL8
K11-TD	20	VRL9	VRL9
K11-TD	25	VRL8	VRL8
K12-TD	25	VRL9	VRL9
K12-TD	30	VRL8	VRL8

Valve selections are based on 60 Hz operation and refer to air having a density equal to 0.075 lbs / cu. Ft and inlet temperarture of 68 deg F. Data is subject to change without notice.

Safety Valves

The VRL valves are designed to protect blowers and / or motors from over pressurization or excess vacuum. When there is over pressurization, the valve opens and discharges to the outside. When there is excess in vacuum, the valve opens and takes flow from outside.
The valves have been designed for low pressure / low vacuum, with minimal difference between the initial value at which the valve begins to open and its fully opened position. The valves are supplied with 2 different springs to maximize their efficiency.
These compact valves, made of aluminum alloy, are both easy to install and calibrate. The valves are designed to operate in a wide range of capacities. The VRL can be plumbed to divert excess primary flow through a secondary external outlet when working in pressure conditions or to pipe in a secondary flow when working in vacuum.
Maximum efficiency is achieved by keeping operating values (flow versus pressure or vacuum) within the operating range (shaded area on graph). Capacity refers to air having a density equal to 0.075 lbs./cu.ft .

VRL6 VRL8 VRL9

OPERATING RANGE

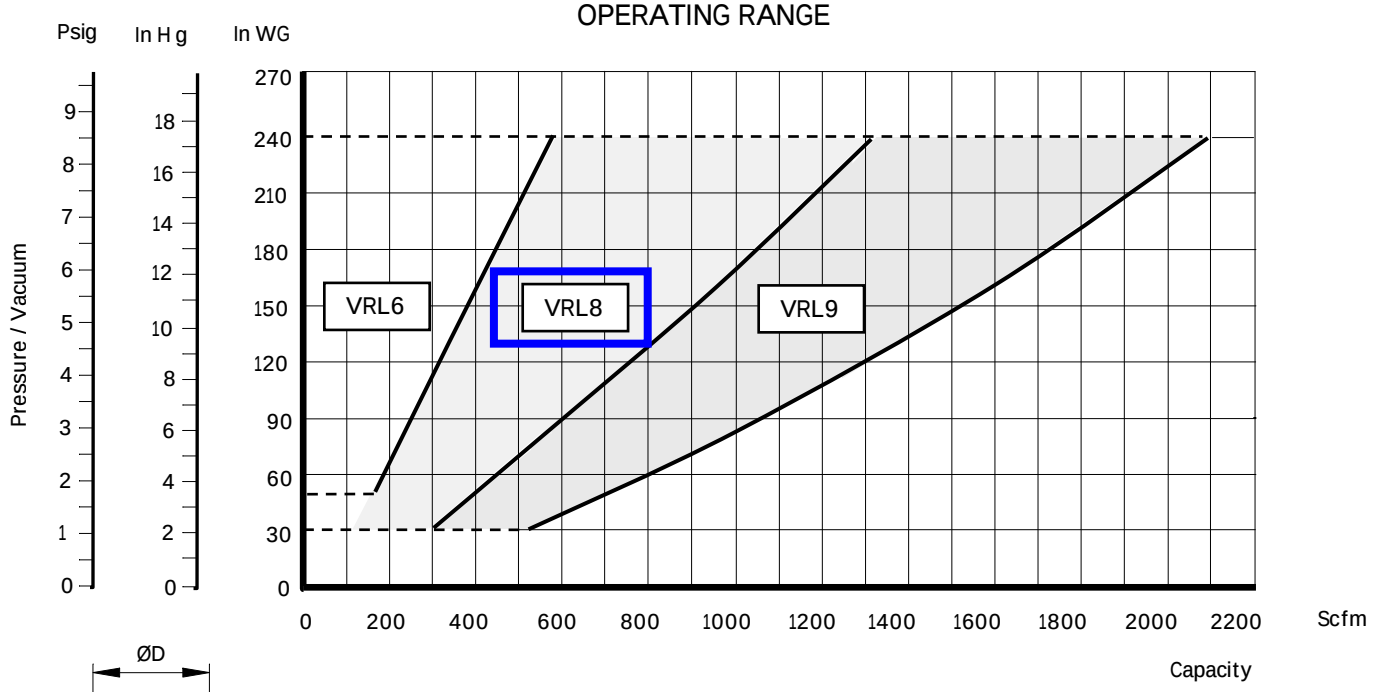

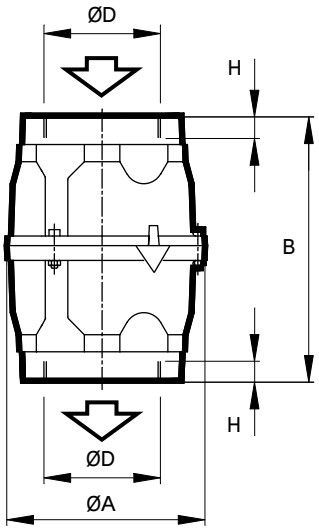

OVERALL DIMENSIONS

TYPE	ND	D	A	B	H	WEIGHT (Lbs)
VRL6	2”	2” NPT	4.02	6.90	0.47	1.9
VRL8	3”	3” NPT	5.31	7.48	0.59	4.2
VRL9	4”	4” NPT	6.30	8.11	0.71	5.7

- Dimensions in inches.
- Specifications subject to change without prior notice.

SOLBERG Solutions

NES NATIONAL ENVIRONMENTAL SYSTEMS

Pressure Drop vs. Flow for Inlet and Vacuum Filters

Choose Filter or Element Number:		**CT-235P-400C**		
Enter Flow Rate in SCFM:		**356.0**	**SCFM**	
Tested SCFM Range:	**Min.**	**100.0**	**Max.**	**500.0**
Pressure Drop =		**4.86**	**Inches of Water/WC**	
Estimated Pressure Drop =			**Inches of Water/WC**	

NOTES:

1. Please select filter from the drop down list and enter the flow values in the blue boxes.

2. Filter/Element numbering are in standard convention: i.e. CSL-235P-300 etc.

3. Calculated values will appear in Green boxes when all values are entered.

4. Flow ratings are based on outside to in flow at standard conditions.

5. Ocassionally, negative values will appear for estimated Pressure Drop. When this occurs, pressure drop will be minimal. Adjust flow rate to within tested range to obtain actual pressure drop.

All information contained within and derived is considered ***Solberg Confidential*** .
Worksheet prepared exclusively for use by National Environmental Systems.

Worksheet updated 6/24/08

SOLBERG®
Filtration & Separation

“ T ” Style Vacuum Filters

CT Series 1” – 6”

Features

- Compact design for space restrictions; min. service area
- Inlet above element for extended element life & maintenance intervals
- Corrosive resistant cast aluminum top with machined connections and integrated baffle design
- “T” style design minimizes piping requirements
- Black powder coat carbon steel drop down bucket

Connection Size	Drill Points/ Gauge Taps	(4) Tap, Mount Sizes	Fasteners
1"	Drill	Drill	Clips
1 ¼”	Drill	Drill	Clips
1 ½”	Drill	Drill	Clips
2"	Drill	M12x1.75	Clips
2 ½”	Drill	M12x1.75	Clips
3"	Drill	½”-13	Clips
4"	Drill	½”-13	Clips
6"	¼”	M12x1.75	Swing Bolts

Technical Specifications

- Vacuum Rating: medium vacuum service*
- Temp (continuous): min -15°F (-26°C) max 220°F (104°C)
- Filter change out differential: 15-20” H_2O over initial Δ P
- Polyester: 99%+ removal efficiency standard to 5 micron
- Paper: 99%+ removal efficiency standard to 2 micron

Options

ATEX Available

- Swing bolts for heavy duty environments
- Drain ports
- Extended bucket (select models)
- Various nonstandard finishes
- Reverse pulse configuration
- See-through bucket (select models)

Rev: CT-US1903K

Sales/Service: 630.773.1363
sales@solbergmfg.com

CT Series 1” – 6”

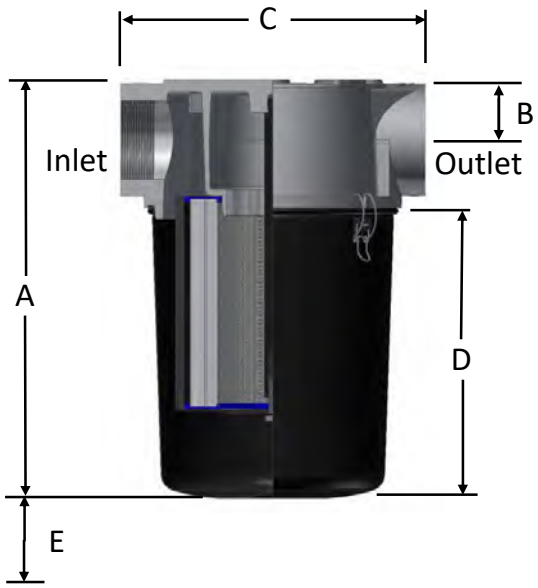

Inlet/Outlet Size	Inlet/Outlet Type	Assembly SCFM Rating	Assembly Part Number Polyester	Assembly Part Number Paper	Dimensions - inches A	Dimensions - inches B	Dimensions - inches C	Dimensions - inches D	Suggested Service ht. E	Approx. Weight lbs.	Replacement Element Part No. Polyester	Replacement Element Part No. Paper	Element SCFM Rating
1”	NPSC	40	**CT-897-100C**	**CT-896-100C**	13 ⅛	1 ½	7	10 ⅛	9"	12	897	896	80
1 ¼”	NPSC	60	**CT-897-125C**	**CT-896-125C**	13 ⅛	1 ½	7	10 ⅛	9"	12	897	896	80
1 ½”	NPSC	80	**CT-897-150C**	**CT-896-150C**	13 ⅛	1 ½	7	10 ⅛	9"	11	897	896	80
2”	NPSC	175	**CT-851-200C**	**CT-850-200C**	12 13/16	2	9	9	9"	16	851	850	290
2 ½”	FPT	210	**CT-851-250C**	**CT-850-250C**	12 13/16	2	9	9	9"	15	851	850	290
3”	FPT	300	**CT-235P-300C**	**CT-234P-300C**	18 ⅝	2 ¾	13 ½	13	9"	30	235P	234P	570
4”	FPT	520	**CT-235P-400C**	**CT-234P-400C**	18 ⅝	2 ¾	13 ½	13	9"	26	235P	234P	570
6"	FPT	1100	**CT-275P-600C**	**CT-274P-600C**	18 ¼	3 ⅞	19	9 13/16	10"	45	275P	274P	1100

Note: CT 2” & 2 ½” models: Element seals on the base of the housing.

*See Vacuum Filter Technical Data section for sizing guidelines and service data.

SOLBERG®
Filtration & Separation

Technical Data

Inlet Vacuum Filters

Applications & Equipment

- Industrial & Severe Duty
- Vacuum Pumps & Systems: Roots, Rotary Vane, Screw, Piston
- Vacuum Packaging Equipment
- Vacuum Furnace
- Blowers: Side Channel & P.D.
- Vacuum Lifters
- Intake Suction Filters
- Food Industry
- Woodworking/Routers
- Ash Handling
- Printing Industry
- Medical/Hospital
- Remote Installations for Piston & Screw Compressors
- Paper Processing
- Waste Water Aeration
- Cement Processing
- Bag House Systems
- Vacuum Vent Breathers
- Chemical Processing
- Factory Automation Equipment
- Leak Detection Systems

Identification

Standard Solberg assemblies should have an identification label/nameplate that gives the following information:

- Assembly Model #
- Replacement Element #

The part number designates the filter type, the element configuration and housing connection size. For example, the following part number identifies the filter as being a "CSL" design filter with a "235" element, "P" prefilter and 4" flange connection size.

CSL-235P-400F

- Connection Size and Type
- Replacement Element Part Number
- Filter Type

Vacuum Service Rating Chart

Threaded vacuum filter connections must be free of defect and properly sealed to achieve deeper vacuum levels. Vacuum service levels are given for reference only and serve as a guideline for product selection. Product certification and alternative designs are available for applications requiring deeper vacuum levels and specific leak rates. Please contact factory for details.

Vacuum Level	Pressure (mbar)	Pressure (Torr)	Pressure (Pa)
Atmospheric Pressure	1013	760	$1.013 \times 10^{+5}$
Coarse Vacuum	1013 to 33	760 to 25	$1 \times 10^{+5}$ to $3 \times 10^{+3}$
Medium Vacuum	33 to 1.3×10^{-3}	25 to 1×10^{-3}	$3 \times 10^{+3}$ to 1×10^{-1}
High Vacuum	1.3×10^{-3} to 1.3×10^{-9}	1×10^{-3} to 1×10^{-9}	1×10^{-1} to 1×10^{-7}

Sales/Service: 630.773.1363
sales@solbergmfg.com

Choosing the Best Filter for Your Equipment

A. When the connection & airflow is known:

1. select the appropriate connection style. (i.e.: MPT, Flange, NPSC, etc.)
2. check assembly SCFM (flow) rating. Compare with your required airflow.

(Note: Assembly flow ratings are based on 6,000 FPM or 30m/sec for a given connection size to achieve low pressure drop performance. When required flow exceeds assembly flow rating, the pressure drop through the outlet connection will increase. In such cases select by element SCFM (flow) rating.)

3. when required flow rating matches connection size; skip to "C. Selecting Elements".

B. When the connection size is unknown, flexible, or the required flow rating exceeds assembly flow rating:

1. match required flow rating with the element flow rating.
2. choose related connection size.

C. Selecting Elements: The filter performance is influenced by the actual application duty and the equipment it is installed on. Regular maintenance checks and proper servicing is required.

Application Duty Descriptions:

Industrial Duty: clean workshop or clean outdoor environment - small element sizing is sufficient.

Severe Duty: dirty workshop, wastewater – medium to large element is recommended.

Extreme Duty: cement, steel making, plastics or dusty material conveying – largest element sizing is recommended.

1. Select media required by your application. Options include:
   a. Standard media
      1. Polyester: all purpose; withstands pulses, moisture, and oily air
      2. Paper: mostly dry, smooth flow applications
   b. Special Media: for a variety of micron levels and media types, see the "Filter Media Specifications" in the Replacement Element Section or contact Solberg.
2. Select element size by matching the element with the anticipated duty and upsize accordingly.

Filter Assembly Maintenance

Request the appropriate maintenance manual for more in-depth information from your Solberg representative or on our website www.solbergmfg.com.

Element Maintenance

Solberg elements should be replaced once the pressure drop reaches 15-20" H_2O above the initial pressure drop of the installation. Cleaning the element is also an option.

Solberg recommends replacing dirty elements for optimal performance. Any damage which results from by-pass or additional pressure drop created by element cleaning is the sole responsibility of the operator.

Note: The overall performance of a filter element is altered once cleaned. The initial pressure drop after subsequent cleanings will be greater than the original, clean pressure drop of the element. After each cleaning, the pressure drop will continue to increase. Under all circumstances, the initial pressure drop of the element needs to be maintained at less than 15" H_2O.

If the pressure drop exceeds 20" H_2O at start-up; it should be replaced with a new element. With many types of equipment, the maximum pressure drop allowed will be dictated by the ability of the equipment to perform to its rated capacity. Under all circumstances, the operator should avoid exceeding the manufacturer's recommended maximum pressure drop for their specific equipment.

All model offerings and design parameters are subject to change without prior notice.
Contact your representative or Solberg for the most current information.

SOLBERG®
Filtration • Separation• Silencing

Compact Filter Silencers

FS Series 1/2” - 6”

Features

- Fully drawn weatherhood
- Tubular silencing design - tubes are positioned to maximize attenuation and air flow while minimizing pressure drop
- Corrosive resistant gray powder coat carbon steel

Technical Specifications

- Temp (continuous): min -15°F (-26°C) max 220°F (104°C)
- Filter change out differential: 15-20” H_2O over initial Δ P
- Pressure drop graphs available upon request
- Polyester: 99%+ removal efficiency standard to 5 micron
- Paper: 99%+ removal efficiency standard to 2 micron

Options

ATEX Available

- Tap holes available
- Pressure drop indicator
- Various media for different environments
- Stainless steel construction
- Various nonstandard finishes and connection styles
- Side Access Silencer Filters (LQB Series) for space restricted enclosures (select models)

Threaded Outlet Assembly

Flange Outlet Assembly

Sales/Service: 630.773.1363
sales@solbergmfg.com

FS Series 1/2” - 6”

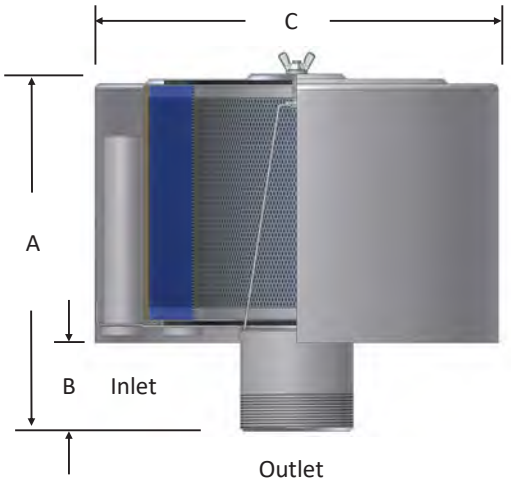

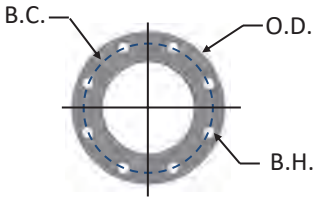

O.D.: Outside Diameter
B.C.: Bolt Circle
B.H.: Bolt Hole

125/150# Pattern Flange	Dimensions - inches O.D.	B.C.	B.H.	No. of Holes	Flange Thickness
4”	9	7 ½	0.75	8	0.5
5”	10	8 ½	0.88	8	0.5
6”	11	9 ½	0.88	8	0.5

MPT Outlet	Assembly SCFM Rating	Assembly Part Number Polyester	Paper	Dimensions - inches A	B	C	Suggested Service ht. inches	No. of Silencing Tubes	Approx. Weight lbs.	Replacement Element Part No. Polyester	Paper	Element SCFM Rating
½”	10	FS-15-050	FS-14-050	3 7/16	1	6	3	1	2	15	14	35
¾”	25	FS-15-075	FS-14-075	4	1 ¼	6	3	2	2	15	14	35
1”	35	FS-15-100	FS-14-100	4	1 5/16	6	3	3	2	15	14	35
1”	55	FS-19P-100	FS-18P-100	6 ⅜	1 4/16	6	5	3	3	19P	18P	100
1 ¼”	70	FS-19P-125	FS-18P-125	6 ¾	1 ⅝	6	5	5	3	19P	18P	100
1 ½”	85	FS-19P-150	FS-18P-150	6 ¾	1 ⅝	6	5	5	4	19P	18P	100
2”	135	FS-31P-200	FS-30P-200	7 ½	2 ¼	10	5	5	8	31P	30P	195
2”	135	FS-231P-200	FS-230P-200	12	2 ⅜	10	10	5	14	231P	230P	300
2 ½”	195	FS-31P-250	FS-30P-250	7 ½	2 ½	10	5	5	8	31P	30P	195
2 ½”	195	FS-231P-250	FS-230P-250	12 ⅜	2 ⅝	10	10	9	15	231P	230P	300
3”	300	FS-231P-300	FS-230P-300	12 ¾	3 ⅛	10 ¼	10	9	15	231P	230P	300
3”	300	FS(12)-235P-300	FS(12)-234P-300	12 ⅞	2 11/16	12 ¼	10	3	29	235P	234P	570
3”	300	FS-275P-300	FS-274P-300	13	3	16	10	9	33	275P	274P	1100
4”	520	FS(12)-235P-400	FS(12)-234P-400	13 ⅞	3 11/16	12 ¼	10	6	29	235P	234P	570
4”	520	FS-275P-400	FS-274P-400	14	4	16	10	9	34	275P	274P	1100
5”	800	FS-245P-500	FS-244P-500	14	4 ⅛	16	10	14	33	245P	244P	880
5”	800	FS-275P-500	FS-274P-500	14	4 ⅛	16	10	14	36	275P	274P	1100
6”	1100	FS-275P-600	FS-274P-600	15	5 ⅛	16	10	18	38	275P	274P	1100

Flange Outlet	Assembly SCFM Rating	Assembly Part Number Polyester	Paper	Dimensions - inches A	B	C	Suggested Service ht. inches	No. of Silencing Tubes	Approx. Weight lbs.	Replacement Element Part No. Polyester	Paper	Element SCFM Rating
4”	520	FS(12)-235P-400F	FS(12)-234P-400F	13 ⅞	3 11/16	12 ¼	10	6	32	235P	234P	570
4”	520	FS-275P-400F	FS-274P-400F	14	4	16	10	9	39	275P	274P	1100
5”	800	FS-245P-500F	FS-244P-500F	14	4 ⅛	16	10	14	38	245P	244P	880
5”	800	FS-275P-500F	FS-274P-500F	14	4 ⅛	16	10	14	41	275P	274P	1100
6”	1100	FS-275P-600F	FS-274P-600F	15	5 ⅛	16	10	18	42	275P	274P	1100

See Filter Silencer Technical Data for sizing guidelines.

All model offerings and design parameters are subject to change without prior notice.
Contact your representative or Solberg for the most current information.

SOLBERG®
Filtration • Separation• Silencing

Technical Data

Inlet Filter Silencers, Silencers

Applications & Equipment

- Industrial & Severe Duty
- Blowers - Side Channel & P.D.
- Breathers
- Fuel Cells
- Piston Compressors
- Screw Compressors
- Centrifugal Compressors
- Hydraulic Breathers – fine filtration
- Engines
- Fans
- Vacuum Pumps & Systems
- Construction\Contractor Industry
- Medical
- Pneumatic Conveying
- Waste Water Aeration
- Sparging
- Factory Air
- Vacuum Vent Breathers
- Cement Processing
- Power Plants
- Centralized Air Intakes

Identification

Standard Solberg assemblies should have an identification label/nameplate that gives the following information:

- Assembly Model #
- Replacement Element #

The part number designates the filter type, the element configuration and housing connection size. For example, the following part number identifies the filter as being an "FS" design filter with a "275" element, "P" prefilter and 3" MPT connection size.

FS-275P-300

- Connection Size and Type
- Replacement Element Part Number
- Filter Type

Typical Noise Attenuation

See chart for typical noise attenuation for filter silencers. It may vary due to the wide range of applications, installations, and machines.

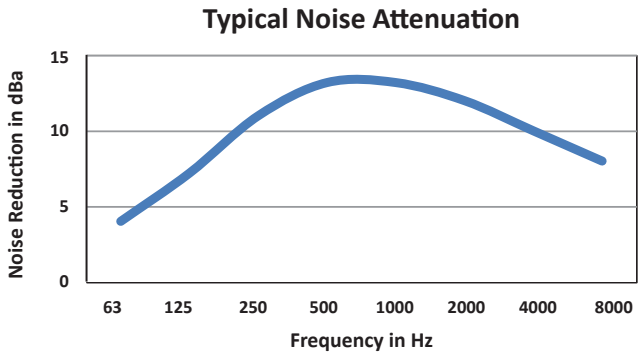

Rev: IFSTD-US1904K

Sales/Service: 630.773.1363
sales@solbergmfg.com

Choosing the Best Filter for Your Equipment

A. When the connection & airflow is known:

1. select the appropriate connection style. (i.e.: MPT, Flange, NPSC, etc.)
2. check assembly SCFM (flow) rating. Compare with your required airflow.

(Note: Assembly flow ratings are based on 6,000 FPM or 30m/sec for a given connection size to achieve low pressure drop performance. When required flow exceeds assembly flow rating, the pressure drop through the outlet connection will increase. In such cases select by element SCFM (flow) rating.)

3. when required flow rating matches connection size; skip to "C. Selecting Elements".

B. When the connection size is unknown, flexible, or the required flow rating exceeds assembly flow rating:

1. match required flow rating with the element flow rating.
2. choose related connection size.

C. Selecting Elements: The filter performance is influenced by the actual application duty and the equipment it is installed on. Regular maintenance checks and proper servicing is required.

Application Duty Descriptions:

Industrial Duty: clean workshop or clean outdoor environment - small element sizing is sufficient.

Severe Duty: dirty workshop, wastewater – medium to large element is recommended.

Extreme Duty: cement, steel making, plastics or dusty material conveying – largest element sizing is recommended.

1. Select media required by your application. Options include:
   a. Standard media
      1. Polyester: all purpose; withstands pulses, moisture, and oily air
      2. Paper: mostly dry, smooth flow applications
   b. Special media: for a variety of micron levels and media types, see the "Filter Media Specifications" in the Replacement Element Section or contact Solberg.
2. Select element size by matching the element with the anticipated duty and upsize accordingly.

Filter Assembly Maintenance

Request the appropriate maintenance manual for more in-depth information from your Solberg representative or on our website www.solbergmfg.com.

Element Maintenance

Solberg elements should be replaced once the pressure drop reaches 15-20" H_2O above the initial pressure drop of the installation. Cleaning the element is also an option.

Solberg recommends replacing dirty elements for optimal performance. Any damage which results from by-pass or additional pressure drop created by element cleaning is the sole responsibility of the operator.

Note: The overall performance of a filter element is altered once cleaned. The initial pressure drop after subsequent cleanings will be greater than the original, clean pressure drop of the element. After each cleaning, the pressure drop will continue to increase. Under all circumstances, the initial pressure drop of the element needs to be maintained at less than 15" H_2O.

If the pressure drop exceeds 20" H_2O at start-up; it should be replaced with a new element. With many types of equipment, the maximum pressure drop allowed will be dictated by the ability of the equipment to perform to its rated capacity. Under all circumstances, the operator should avoid exceeding the manufacturer's recommended maximum pressure drop for their specific equipment.

All model offerings and design parameters are subject to change without prior notice.
Contact your representative or Solberg for the most current information.

VR-400

High Flow Radial Design Vapor Phase Filter

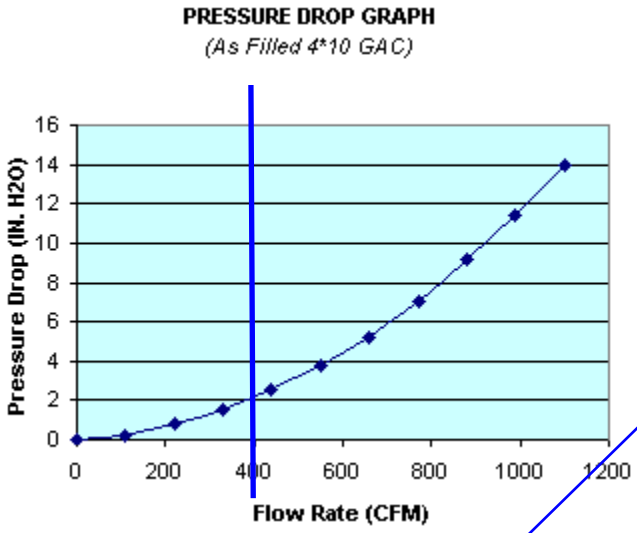

N2 - Outlet Nozzle

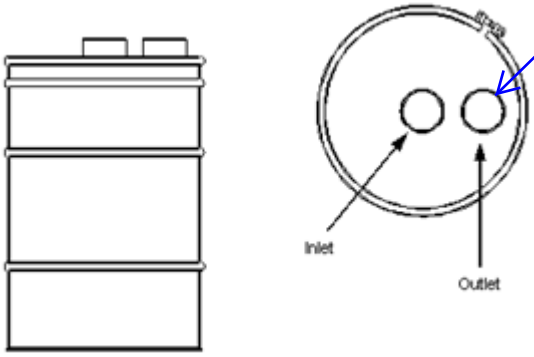

Tetrasolv Notes (04-23-2018):
Along with the entire carbon handling procedure,
The only thing different with the VR is:
Vacuum out through N2 (offset nozzle on lid).
When the majority of the carbon is removed,
remove the top lid.
Finish vacuuming of the remainder of the carbon.
Install lid and fill carbon through N2.
It will be necessary to push the carbon around
through N2 with hand or small tool to entirely fill
the vessel.

VR-400 SPECIFICATIONS			
Overall Height	3'11"	Vessel/Internal Piping Materials	CS/ SCH 40 PVC
Diameter	30"	Internal Coating	Polyamide Epoxy Resin
Inlet / Outlet (FNPT)	6"	External Coating	Urethane Enamel
Drain / Vent (FNPT)	OPT	Maximum Pressure / Temp	2 PSIG / 150° F
GAC Fill (lbs)	400	Cross Sectional Bed Area	8.8 FT^2
Shipping / Operational Weight (lbs)	500/575	Bed Depth/Volume	11.7 IN / 14.25 FT^3

ACTIVATED CARBON DATA SHEET

Stags - CVR

Applications

VOC Abatement
Odor Control
Air Purification
BTEX Removal

Features / Benefits

High Activity
High Hardness
Low Attrition Rates
No Preconditioning Required

Packaging

50 lb bags
1000 lb bulk bags

STAGS

Phone: 713.703.6516
E-mail: info@tetrasolv.com

Stags - CVR is a high activity carbon that is produced in the newest reactivation facility in the United States. The new state of the art facility produces consistent high quality carbon for the end user. The recycled material can be used to remove a wide variety of impurities from the vapor stream. **Stags - CVR** can be sold separate or part of a turnkey package involving equipment and service.

Specifications

Ball Pan Hardness	95
Carbon Tetrachloride Activity	55 min (g/100g)
Iodine Number	950 mg/g
Apparent Density	0.48-0.52 g/cc
	28 - 30 lbs/ft3
Total Surface Area	1050 m^2/g
Moisture	5% max
Mesh Size +4	less than 5%
Mesh Size –8	less than 10%

CAUTION *Activated carbon can remove oxygen from air under wet or humid conditions. Care should be taken when entering confined spaces where wet activated carbon is present. Use proper breathing apparatus to prevent prolong dust exposure.*

NOTICE *Stags reserve the right to change product specifications without prior notification. The information contained in this datasheet is intended to assist a customer in the evaluation and carbon selection. Stags or any of its affiliations assumes no obligation or liability for the usage of the information in this datasheet. No guarantees or warranties, expressed or implied, are provided and the user must accept full responsibility for performance of carbon based on this data.*

SPEARS® MANUFACTURING COMPANY
CORPORATE OFFICE
15853 OLDEN STREET • SYLMAR, CALIFORNIA 91342
MAILING ADDRESS: P.O. BOX 9203 • SYLMAR, CALIFORNIA 91392
Telephone (818) 364-1611 • Fax (818) 364-6945
www.spearsmfg.com

CERTIFICATE OF COMPLIANCE

EverTUFF® CPVC Schedule 40 & 80 Industrial Pipe & Fittings

Spears® Manufacturing Company certifies that its EverTUFF® CPVC Schedule 40 & 80 pipe is manufactured in the U.S.A. from a Type IV, Grade 1 Chlorinated Polyvinyl Chloride (CPVC) compound having a minimum cell classification of 23447 conforming to ASTM D1784, and manufactured in strict compliance to ASTM F441, consistently meeting and/or exceeding the quality assurance test requirements of these standards as Certified by NSF International. EverTUFF® CPVC pipe are supplied with plain ends in 10 and 20-foot lengths. CPVC Pipe and fittings are available in nominal pipe sizes from ¼" through 24".

Spears® Manufacturing Company certifies that its Chlorinated Polyvinyl Chloride (CPVC) Schedule 80 injection molded fittings are manufactured in the U.S.A. in strict compliance to ASTM Standard F439 for threaded and socket-type fittings from a CPVC compound having a minimum cell classification of 23447 conforming to ASTM Standard D1784.

CPVC flanges have socket dimensions that conform to ASTM Standard F439. Flanges have a bolt-hole pattern that conforms to ANSI/ASME B16.5 CL150. Flanges have a non-shock maximum internal pressure rating of 150 psi at 73°F.

Molded CPVC wyes have socket dimensions that conform to ASTM Standard F439 and have a non-shock maximum internal pressure rating of 235 psi at 73°F for sizes 1/2" – 2-1/2", 150 psi at 73°F for sizes 3" – 6", 100psi at 73°F for sizes 8" & 10", and 80 psi at 73°F for size 12".

The product is certified for potable water service, to the Uniform Plumbing Code, to NSF/ANSI 372 and conforms with the lead content requirements for "lead free" plumbing as defined by California, Vermont, Maryland, and Louisiana state laws and the U.S. Safe Drinking Water Act, by NSF International.

CPVC Pipe and fittings meet the applicable requirements for non-metallic piping as outlined in ASME Standard B31.3-2014 – Process Piping.

EverTUFF® CPVC pipe and fittings are listed to 6" by ICC-ES PMG-Listing Program (see listing number PMG-1278 at www.icc-es-pmg.org) for compliance with ASTM E84/ UL723 Surface Burning Characteristic having flame spread/smoke development index of less than 25/50 for use in return air plenums.

Spears® EverTUFF® CPVC pipe and fittings have been successfully tested in a vacuum of twenty-six inches of mercury (Hg) at 73°F. This test was conducted for one hour with a leak factor of not more than one inch of mercury.

Doug Swingley
Chief Engineer/General Manager
dswingley@spearsmfg.net

January 2019

SERIES LPG4

2.5″ LOW PRESSURE GAGE

1.5% Full-Scale Accuracy in a 2.5″ Gage

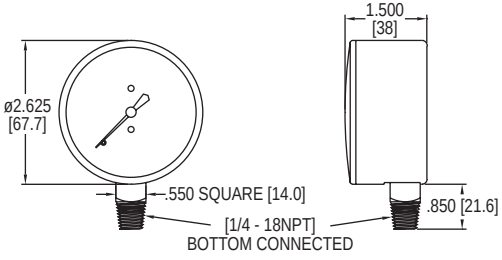

Our **Series LPG4 2.5″ Low Pressure Gage** offers top of the line performance and accuracy for pressure and vacuum applications up to and including 160 in w.c. The LPG4 is constructed from a single beryllium-copper diaphragm affixed to a precision-machined brass plate. This innovative design, together with a high-precision, milled-teeth brass movement and nickel-silver pinion and bearing surface, provide the user with a top of the line low pressure instrument.

FEATURES/BENEFITS

- Low pressure gage provides a selection to meet specific application
- Specifie with high ambient and process temperature ratings mean more robust uses and longer service-life
- High accuracy gage for applications requiring more precise measurement is a concern

APPLICATIONS

- Air flow indicatio
- Liquid level
- Draft measurement

SPECIFICATIONS	
Service: Compatible gases & liquids. **Wetted Materials:** Brass and beryllium copper. **Housing:** Drawn steel, black finish **Lens:** Polycarbonate (removable). **Accuracy:** ±1.5% FS. **Pressure Limit:** 100% of range scale.	**Temperature Limits:** Process: -40 to 160°F (-40 to 70°C); Ambient: -40 to 140°F (-40 to 60°C). **Size:** 2.5″ (63 mm). **Process Connections:** 1/4″ male NPT. **Enclosure Rating:** NEMA 3 (IP54). **Weight:** 7.3 oz (0.21 kg).

OPTIONS	
Use order code:	**Description**
NISTCAL-PG1	NIST traceable calibration certificat

MODEL CHART			
Model	**Range**	**Model**	**Range**
LPG4-D7122N	-10 to 0 in w.c. (-2.5 to 0 kPa)	**LPG4-D8322N**	0 to 40 in w.c. (0 to 10 kPa)
LPG4-D7222N	-15 to 0 in w.c. (-4 to 0 kPa)	**LPG4-D8422N**	0 to 60 in w.c. (0 to 15 kPa)
LPG4-D7322N	-25 to 0 in w.c. (-6 to 0 kPa)	**LPG4-D8522N**	0 to 80 in w.c. (0 to 20 kPa)
LPG4-D7422N	-40 to 0 in w.c. (-10 to 0 kPa)	**LPG4-D8622N**	0 to 100 in w.c. (0 to 25 kPa)
LPG4-D7522N	-60 to 0 in w.c. (-15 to 0 kPa)	**LPG4-D8722N**	0 to 160 in w.c. (0 to 40 kPa)
LPG4-D7622N	-80 to 0 in w.c. (-20 to 0 kPa)	**LPG4-D8922N**	-4 to 0 to 6 in w.c. (-1 to 0 to 1.5 kPa)
LPG4-D7722N	-100 to 0 in w.c. (-25 to 0 kPa)	**LPG4-D9022N**	-6 to 0 to 10 in w.c. (-1.5 to 0 to 2.5 kPa)
LPG4-D7822N	-160 to 0 in w.c. (-40 to 0 kPa)	**LPG4-D9122N**	-8 to 0 to 16 in w.c. (-2 to 0 to 4 kPa)
LPG4-D7922N	-235 to 0 in w.c. (-60 to 0 kPa)	**LPG4-D9222N**	-16 to 0 to 24 in w.c. (-4 to 0 to 6 kPa)
LPG4-D8022N	0 to 10 in w.c. (0 to 2.5 kPa)	**LPG4-D9322N**	-24 to 0 to 40 in w.c. (-6 to 0 to 10 kPa)
LPG4-D8122N	0 to 15 in w.c. (0 to 3.75 kPa)	**LPG4-D9422N**	-30 to 0 to 50 in w.c. (-7.5 to 0 to 12.5 kPa)
LPG4-D8222N	0 to 25 in w.c. (0 to 6 kPa)	**LPG4-D9522N**	-40 to 0 to 60 in w.c. (-10 to 0 to 15.0 kPa)

USA: California Proposition 65
⚠WARNING: Cancer and Reproductive Harm - www.P65Warnings.ca.gov

Dwyer
SERIES 2000

MAGNEHELIC® DIFFERENTIAL PRESSURE GAGES

Indicate Positive, Negative or Differential, Accurate within 1%

5 YEAR LIMITED WARRANTY

Standard Magnehelic® Gage

High Accuracy Magnehelic® Gage
Note: Shown with optional -SS bezel

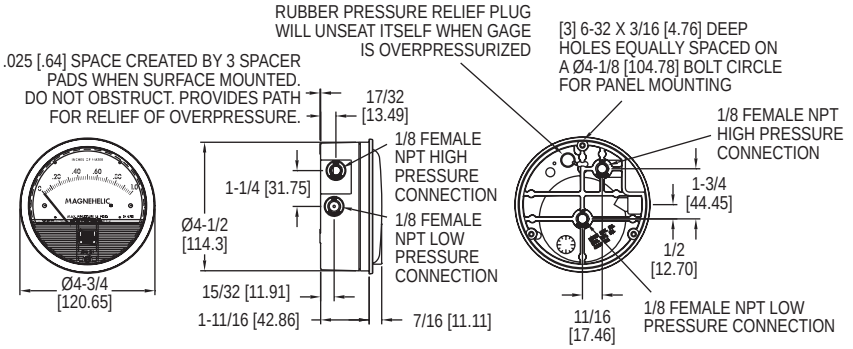

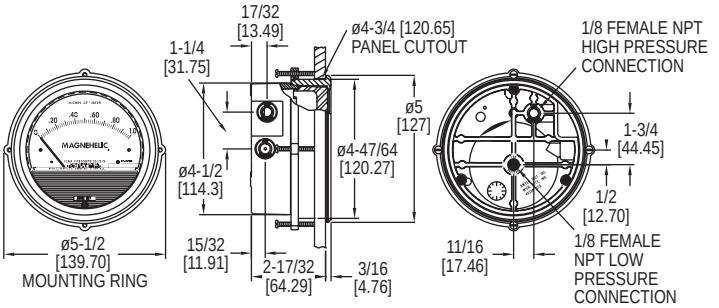

VIDEO ONLINE

Select the **Series 2000 Magnehelic® Differential Pressure Gages** for a versatile low differential pressure gage with a wide choice of 81 models and 27 options to choose from. Using Dwyer's simple, frictionless Magnehelic® gage movement, it quickly indicates air or non-corrosive gas pressures--either positive, negative (vacuum) or differential. The design resists shock, vibration, over-pressures and is weatherproof to IP67.
Select the –HA High Accuracy Magnehelic® gage option for an accuracy within 1% of full scale. Also included with the –HA option at no extra cost are a mirrored scale overlay and a 6 point calibration certificate.

FEATURES/BENEFITS

- Easy to read gage through undistorted plastic face permits viewing from far away
- Patented design provides quick response to pressure changes means no delay in assessing critical situations
- Durable and rugged housing and high-quality components combine to provide long-service life and minimized down-time
- High accuracy option is twice as accurate as the standard Magnehelic® gage

APPLICATIONS

- Filter monitoring
- Air velocity with Dwyer pitot tube
- Blower vacuum monitoring
- Fan pressure indication
- Duct, room or building pressures
- Clean room positive pressure indication

SPECIFICATIONS

Service: Air and non-combustible, compatible gases (natural gas option available). **Note:** May be used with hydrogen. Order a Buna-N diaphragm. Pressures must be less than 35 psi.
Wetted Materials: Consult factory.
Housing: Die cast aluminum case and bezel, with acrylic cover. Exterior finish is coated gray to withstand 168 hour salt spray corrosion test.
Accuracy: ±2% (-HA model ±1) of FS (±3% (-HA ±1.5%) on -0, -100PA, -125PA, -10MM and ±4% (-HA ±2%) on -00, -60PA, -6MM ranges), throughout range at 70°F (21.1°C).
Pressure Limits: -20 in Hg to 15 psig (-0.677 to 1.034 bar); MP option: 35 psig (2.41 bar); HP option: 80 psig (5.52 bar).
Enclosure Rating: IP67.
Overpressure: Relief plug opens at approximately 25 psig (1.72 bar), standard gages only.❶

Temperature Limits: 20 to 140°F* (-6.67 to 60°C). -20°F (-28°C) with low temperature option.
Size: 4″ (101.6 mm) diameter dial face.
Mounting Orientation: Diaphragm in vertical position. Consult factory for other position orientations.
Process Connections: 1/8″ female NPT duplicate high and low pressure taps - one pair side and one pair back.
Weight: 1 lb 2 oz (510 g), MP & HP 2 lb 2 oz (963 g).
Standard Accessories: Two 1/8″ NPT plugs for duplicate pressure taps, two 1/8″ pipe thread to rubber tubing adapter, and three flush mounting adapters with screws. (Mounting and snap ring retainer substituted for three adapters in MP & HP gage accessories.)
Agency Approvals: Meets the technical requirements of EU Directive 2011/65/EU (RoHS II). **Note:** -SP models not RoHS approved.

Note: For applications with high cycle rate within gage total pressure rating, next higher rating is recommended. See Medium and High pressure options.

*Low temperature models available as special options.

ACCESSORIES

Model	Description
A-432	Portable kit; combine carrying case with any Magnehelic® gage of standard range, except high pressure connection. Includes 9 ft (2.7 m) of 3/16″ ID rubber tubing, standhang bracket and terminal tube with holder
A-605	Air filter gage accessory kit; adapts any standard Magnehelic® gage for use as an air filter gage. Includes aluminum surface mounting bracket with screws, two 5 ft (1.5 m) lengths of 1/4″ aluminum tubing, two static pressure tips and two molded plastic vent valves, integral compression fittings on both tips and valves
A-605B	Air filter gage accessory kit; air filter kit with two plastic open/close valves, two 4″ steel static tips, plastic tubing and mounting flange
A-605C	Air filter gage accessory kit; air filter kit with two plastic open/close valves, two plastic static tips, plastic tubing and mounting flange

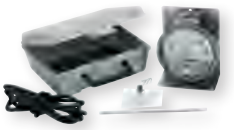

A-432

A-605

❶Over Protection Note: See page 21 (Series 2000)

MAGNEHELIC® DIFFERENTIAL PRESSURE GAGES

Indicate Positive, Negative or Differential, Accurate within 1%

Bezel provides flange for flush mounting in panel.

Clear plastic face is highly resistant to breakage. Provides undistorted viewing of pointer and scale.

Precision litho-printed scale is accurate and easy to read.

Calibrated range spring is flat spring steel. Small amplitude of motion assures consistency and long life. It reacts to pressure on diaphragm. Live length adjustable for calibration.

Red tipped pointer of heat treated aluminum tubing is easy to see. It is rigidly mounted on the helix shaft.

Pointer stops of molded rubber prevent pointer over-travel without damage.

"Wishbone" assembly provides mounting for helix, helix bearings and pointer shaft.

Jeweled bearings are shock-resistant mounted; provide virtually friction-free motion for helix. Motion damped with high viscosity silicone fluid.

Helix is precision made from an alloy of high magnetic permeability. Mounted in jeweled bearings, it turns freely, following the magnetic field to move the pointer across the scale.

Zero adjustment screw is conveniently located in the plastic cover, and is accessible without removing cover. O-ring seal provides pressure tightness.

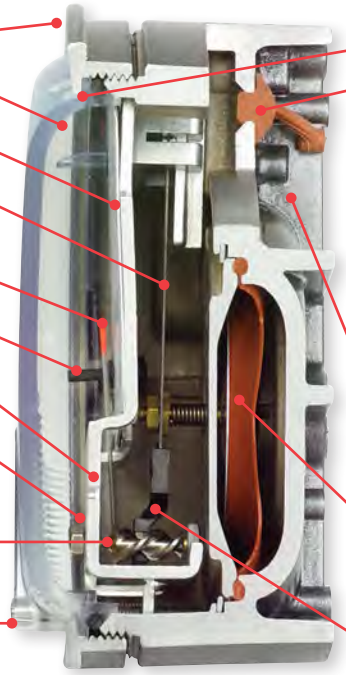

O-ring seal for cover assures pressure integrity of case.

OVERPRESSURE PROTECTION
Blowout plug is comprised of a rubber plug on the rear which functions as a relief valve by unseating and venting the gage interior when over pressure reaches approximately 25 psig (1.7 bar). To provide a free path for pressure relief, there are four spacer pads which maintain 0.023″ clearance when gage is surface mounted. Do not obstruct the gap created by these pads.
The blowout plug is not used on models above 180″ of water pressure, medium or high pressure models, or on gages which require an elastomer other than silicone for the diaphragm.
The blowout plug should not be used as a system overpressure control. High supply pressures may still cause the gage to fail due to over pressurization, resulting in property damage or serious injury. Good engineering practices should be utilized to prevent your system from exceeding the ratings of any component.

Die cast aluminum case is precision made and iridite-dipped to withstand 168 hour salt spray corrosion test. Exterior finished in baked dark gray hammerloid. One case size is used for all standard pressure options, and for both surface and flush mounting.

Silicone rubber diaphragm with integrally molded O-ring is supported by front and rear plates. It is locked and sealed in position with a sealing plate and retaining ring. Diaphragm motion is restricted to prevent damage due to overpressures.

Samarium Cobalt magnet mounted at one end of range spring rotates helix without mechanical linkages.

MODEL CHART

Model	Range, Inches of Water
2000-00N†••	.05-0-.2
2000-00†••	0-.25
2000-0†•	0-.50
2001	0-1.0
2002	0-2.0
2003	0-3.0
2004	0-4.0
2005	0-5.0
2006	0-6.0
2008	0-8.0
2010	0-10
2012	0-12
2015	0-15
2020	0-20
2025	0-25
2030	0-30
2040	0-40
2050	0-50
2060	0-60
2080	0-80
2100	0-100
2120	0-120
2150	0-150
2160	0-160
2180*	0-180
2250*	0-250
Zero Center Ranges	
2300-00†••	0.125-0-0.125
2300-0†•	.25-0-.25
2301	.5-0-.5
2302	1-0-1
2304	2-0-2
2310	5-0-5
2320	10-0-10
2330	15-0-15

Model	Range, PSI
2201	0-1
2202	0-2
2203	0-3
2204	0-4
2205	0-5
2210*	0-10
2215*	0-15
2220*	0-20
2230**	0-30

Model	Range, CM of Water
2000-15CM	0-15
2000-20CM	0-20
2000-25CM	0-25
2000-50CM	0-50
2000-80CM	0-80
2000-100CM	0-100
2000-150CM	0-150
2000-200CM	0-200
2000-250CM	0-250
2000-300CM	0-300
Zero Center Ranges	
2300-4CM	2-0-2
2300-10CM	5-0-5
2300-30CM	15-0-15

Model	Range, MM of Water
2000-6MM†••	0-6
2000-10MM†•	0-10
2000-15MM	0-15
2000-25MM	0-25
2000-30MM	0-30
2000-50MM	0-50
2000-80MM	0-80
2000-100MM	0-100
2000-125MM	0-125
2000-150MM	0-150
2000-200MM	0-200
2000-250MM	0-250
2000-300MM	0-300
Zero Center Ranges	
2300-6MM†••	3-0-3
2300-10MM†•	5-0-5
2300-20MM†•	10-0-10

Model	Range, Pa
2000-60NPA†••	10-0-50
2000-60PA†••	0-60
2000-100PA†•	0-100
2000-125PA†•	0-125
2000-250PA	0-250
2000-300PA	0-300
2000-500PA	0-500
2000-750PA	0-750
2000-1000PA	0-1000
Zero Center Ranges	
2300-60PA†••	30-0-30
2300-100PA†•	50-0-50
2300-120PA	60-0-60
2300-200PA	100-0-100
2300-250PA	125-0-125
2300-300PA	150-0-150
2300-500PA	250-0-250
2300-1000PA	500-0-500

Model	Range, kPa
2000-0.5KPA	0-0.5
2000-1KPA	0-1
2000-1.5KPA	0-1.5
2000-2KPA	0-2
2000-2.5KPA	0-2.5
2000-3KPA	0-3
2000-4KPA	0-4
2000-5KPA	0-5
2000-8KPA	0-8
2000-10KPA	0-10
2000-15KPA	0-15
2000-20KPA	0-20
2000-25KPA	0-25
2000-30KPA	0-30
Zero Center Ranges	
2300-1KPA	.5-0-.5
2300-2KPA	1-0-1
2300-2.5KPA	1.25-0-1.25
2300-3KPA	1.5-0-1.5

Dual Scale Air Velocity Units
For use with pitot tube

Model	Range, in w.c./ Velocity F.P.M.
2000-00AV†••	0-.25/ 300-2000
2000-0AV†•	0-.50/ 500-2800
2001AV	0-1.0/ 500-4000
2002AV	0-2.0/ 1000-5600
2005AV	0-5.0/ 2000-8800
2010AV	0-10/ 2000-12500

Dual Scale English/Metric Models

Model	Range, in w.c.	Range, Pa or kPa
2000-00D†••	0-.25	0-62 Pa
2000-0D†•	0-0.5	0-125 Pa
2001D	0-1.0	0-250 Pa
2002D	0-2.0	0-500 Pa
2003D	0-3.0	0-750 Pa
2004D	0-4.0	0-1.0 kPa
2005D	0-5.0	0-1.25 kPa
2006D	0-6.0	0-1.5 kPa
2008D	0-8.0	0-2.0 kPa
2010D	0-10	0-2.5 kPa
2015D	0-15	0-3.7 kPa
2020D	0-20	0-5 kPa
2025D	0-25	0-6.2 kPa
2050D	0-50	0-12.4 kPa
2060D	0-60	0-15 kPa

†These ranges calibrated for vertical scale position • Accuracy ±3% •• Accuracy ±4% *MP option standard **HP option standard

VELOCITY AND VOLUMETRIC FLOW UNITS
Scales are available on the Magnehelic® gage that read in velocity units (FPM, m/s) or volumetric flow units (SCFM, m^3/s, m^3/h). Stocked velocity units with dual range scales in inches w.c. and feet per minute are shown above. For other ranges contact the factory. When ordering volumetric flow scales please specify the maximum flow rate and its corresponding pressure.
Example: 0.5 in w.c. = 16,000 CFM.

ACCESSORIES

Model	Description
A-321	Safety relief valve
A-448	3-piece magnet kit for mounting Magnehelic® gage directly to magnetic surface
A-135	Rubber gasket for panel mounting
A-401	Plastic carry case
A-310A	3-way vent valves. In applications where pressure is continuous and the Magnehelic® gage is connected by metal or plastic tubing which cannot be easily removed, we suggest using Dwyer A-310A vent valves to connect gage. Pressure can then be removed to check or re-zero the gage.

A-310A

Dwyer

HIGH ACCURACY MAGNEHELIC® DIFFERENTIAL PRESSURE GAGE

5 YEAR LIMITED WARRANTY

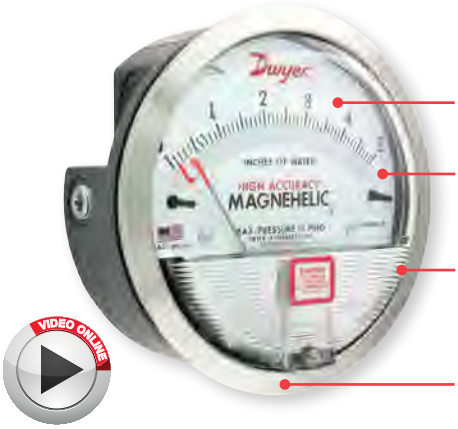

Twice as accurate as the standard Magnehelic® gage

Mirrored scale overlay eliminates parallax error

IP67 weatherproof housing

Optional brushed SS bezel

6-Point Calibration Certificate Included

OPTIONS - HIGH ACCURACY MAGNEHELIC® GAGE	
To order add suffix:	Description
-HA	High Accuracy Magnehelic® Gage. Accuracy within 1% and weatherproof. Also includes mirrored scale overlay and a six point calibration certificate
-SS	Corrosion resistant brushed 304 stainless steel bezel

Accuracy Specifications: See page 20 (Series 2000)

ADDITIONAL GAGE OPTIONS

OPTIONS - OTHER OPTIONAL BEZELS	
To order add suffix:	Description
-CB	Chrome bezel option: A chrome plated aluminum bezel for an aesthetically pleasing finish when mounting on metal surfaces such as control panels.
-SB	Stainless steel bezel option: 304 stainless steel electro polished Ra 16 finished bezel.
-SS	Corrosion resistant brushed 304 stainless steel bezel

LED Setpoint Indicator

Adjustable Signal Flag

Transparent Overlay

Mirrored Scale Overlay

Integrated Mounting Plate

OPTIONS - LED SETPOINT INDICATOR	
To order add suffix:	Description
-SP	Bright red LED on right scale shows when setpoint is reached. Field adjustable from gage face, unit operates on 12-24 VDC. Setpoint indicator option comes with medium pressure (MP) bezel.
Note: 4-13/16˝ hole for flush mounting.	
OPTIONS - ADJUSTABLE SIGNAL FLAG	
To order add suffix:	Description
-ASF	Integral with plastic gage cover. Available for most models except those with medium or high pressure construction. Can be ordered with gage or separate.
OPTIONS - TRANSPARENT OVERLAYS	
To order add suffix:	Description
-G	Green (to highlight and emphasize critical pressures)
-R	Red (to highlight and emphasize critical pressures)
-Y	Yellow (to highlight and emphasize critical pressures)
OPTIONS - MIRRORED SCALE OVERLAY	
To order add suffix:	Description
-M	A mirrored scale overlay is also available to assist in reducing parallax error.
OPTIONS - INTEGRATED MOUNTING PLATE	
To order add suffix:	Description
-AHU1	Furnished with attached surface mounting plate
-AHU2	Furnished with attached surface mounting plate and including A-481 installer kit (2 plastic static pressure tips and 7´of PVC tubing)

OPTIONS - FOR HIGH STATE PRESSURE APPLICATIONS	
To order add suffix:	Description
-HP	High pressure option: for pressures to 80 psig
-MP	Medium pressure option: for pressures to 35 psig

OPTIONS	
To order add suffix:	Description
-FC	Factory calibration certificate
-LT	Low temperatures to -20°F (-28°C)
-NIST	NIST traceable calibration certificate

MAGNEHELIC® GAGE MOUNTING ACCESSORIES

A-610

A-369

A-464

A-299

A-286

A-300

A-368

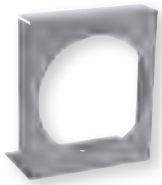

A-371

A single case size is used for most models of Magnehelic® gages. They can be flush or surface mounted with standard hardware supplied. Complete mounting and connection fittings plus instructions are furnished with each instrument. A 4-9/16″ hole is required for flush panel mounting.

Flush mounting is easily accomplished with the new A-300 Flush Mounting bracket. This bracket provides a solution to quickly and conveniently flush mount the Magnehelic® gage. The A-300 is ideal for mounting the Magnehelic® gage on control panel doors.

The A-368 is a simple bracket for quickly surface mounting the Magnehelic® gage. After securing the Magnehelic® gage to the A-368 bracket, mount the bracket on any flat surface.

The A-369 allows the Magnehelic® gage to be easily carried to locations where pressure readings need to be taken. The A-369 can stand on its own or hang on a nail or hook.

ACCESSORIES	
Model	**Description**
A-610	Pipe mounting kit for installing on 1-1/4″ to 2″ horizontal or vertical pipe
A-286	Magnehelic® gage panel mounting flange
A-369	Stand-hang bracket, aluminum, for Magnehelic® gage
A-300	Flush mounting bracket
A-464	Flush mount kit for Magnehelic® gage
A-368	Surface mounting plate, aluminum, for Magnehelic® gage
A-299	Mounting bracket, flush mount for Magnehelic® gage, bracket is then surface mounted, steel with gray hammerloid epoxy finish
A-371	Surface mounting bracket, use with medium pressure (-MP) or high pressure (-HP) models only

SERIES A-320

INSTRUMENT ENCLOSURES

Protects Various Instruments

A-320-A

A-320-A With Gage Installed

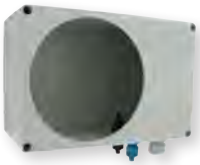

A-320-B

A-320-B With Gage Installed

Series A-320 Instrument Enclosures protect instruments in all applications. The A-320-A fits standard Magnehelic® size instruments (4-9/16″ diameter) and the A-320-B fits standard 3000MR Photohelic® switch/gage size instruments (4-13/16″ diameter). Both models include silicone tubing, gage barbs and mounting hardware.

MODEL CHART	
Model	**Compatible Instruments**
A-320-A	2000 Magnehelic® Gage, DM-1000 Digital Differential Pressure Gage, DM-2000 Differential Pressure Transmitter
A-320-B	3000MR Photohelic® Switch/Gage, Series 605 Magnehelic® Differential Pressure Transmitter, DH3 Digihelic® Pressure Controller, 2000 Magnehelic® Gage with medium and high pressure options

SPECIFICATIONS
Housing: ABS.
Process Connections: Anodized aluminum.
Enclosure Rating: NEMA 1 (IP10). Note: Check instruments rating.
Weight: Model A-320-A: 11.29 oz (320 g); A-320-B: 16.23 oz (420 g).
Gage Size Opening: A-320-A: 4-9/16 in (115.89 mm); A-320-B: 4-13/16 in (122.24 mm).

SERIES LPG4

2.5″ LOW PRESSURE GAGE

1.5% Full-Scale Accuracy in a 2.5″ Gage

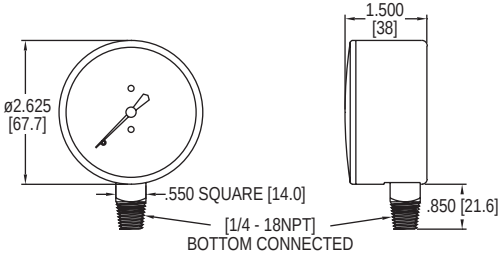

Our **Series LPG4 2.5″ Low Pressure Gage** offers top of the line performance and accuracy for pressure and vacuum applications up to and including 160 in w.c. The LPG4 is constructed from a single beryllium-copper diaphragm affixed to a precision-machined brass plate. This innovative design, together with a high-precision, milled-teeth brass movement and nickel-silver pinion and bearing surface, provide the user with a top of the line low pressure instrument.

FEATURES/BENEFITS

- Low pressure gage provides a selection to meet specific application
- Specifie with high ambient and process temperature ratings mean more robust uses and longer service-life
- High accuracy gage for applications requiring more precise measurement is a concern

APPLICATIONS

- Air flow indicatio
- Liquid level
- Draft measurement

SPECIFICATIONS

Service: Compatible gases & liquids.
Wetted Materials: Brass and beryllium copper.
Housing: Drawn steel, black finish
Lens: Polycarbonate (removable).
Accuracy: ±1.5% FS.
Pressure Limit: 100% of range scale.

Temperature Limits: Process: -40 to 160°F (-40 to 70°C); Ambient: -40 to 140°F (-40 to 60°C).
Size: 2.5″ (63 mm).
Process Connections: 1/4″ male NPT.
Enclosure Rating: NEMA 3 (IP54).
Weight: 7.3 oz (0.21 kg).

OPTIONS

Use order code:	Description
NISTCAL-PG1	NIST traceable calibration certificat

MODEL CHART

Model	Range	Model	Range
LPG4-D7122N	-10 to 0 in w.c. (-2.5 to 0 kPa)	**LPG4-D8322N**	0 to 40 in w.c. (0 to 10 kPa)
LPG4-D7222N	-15 to 0 in w.c. (-4 to 0 kPa)	**LPG4-D8422N**	0 to 60 in w.c. (0 to 15 kPa)
LPG4-D7322N	-25 to 0 in w.c. (-6 to 0 kPa)	**LPG4-D8522N**	0 to 80 in w.c. (0 to 20 kPa)
LPG4-D7422N	-40 to 0 in w.c. (-10 to 0 kPa)	**LPG4-D8622N**	0 to 100 in w.c. (0 to 25 kPa)
LPG4-D7522N	-60 to 0 in w.c. (-15 to 0 kPa)	**LPG4-D8722N**	0 to 160 in w.c. (0 to 40 kPa)
LPG4-D7622N	-80 to 0 in w.c. (-20 to 0 kPa)	**LPG4-D8922N**	-4 to 0 to 6 in w.c. (-1 to 0 to 1.5 kPa)
LPG4-D7722N	-100 to 0 in w.c. (-25 to 0 kPa)	**LPG4-D9022N**	-6 to 0 to 10 in w.c. (-1.5 to 0 to 2.5 kPa)
LPG4-D7822N	-160 to 0 in w.c. (-40 to 0 kPa)	**LPG4-D9122N**	-8 to 0 to 16 in w.c. (-2 to 0 to 4 kPa)
LPG4-D7922N	-235 to 0 in w.c. (-60 to 0 kPa)	**LPG4-D9222N**	-16 to 0 to 24 in w.c. (-4 to 0 to 6 kPa)
LPG4-D8022N	0 to 10 in w.c. (0 to 2.5 kPa)	**LPG4-D9322N**	-24 to 0 to 40 in w.c. (-6 to 0 to 10 kPa)
LPG4-D8122N	0 to 15 in w.c. (0 to 3.75 kPa)	**LPG4-D9422N**	-30 to 0 to 50 in w.c. (-7.5 to 0 to 12.5 kPa)
LPG4-D8222N	0 to 25 in w.c. (0 to 6 kPa)	**LPG4-D9522N**	-40 to 0 to 60 in w.c. (-10 to 0 to 15.0 kPa)

USA: California Proposition 65
⚠WARNING: Cancer and Reproductive Harm - www.P65Warnings.ca.gov

GRAINGER FOR THE ONES WHO GET IT DONE GRAINGER INTERNATIONAL, INC. GLOBAL SOURCING DIVISION	-- GGS TECHNICAL SPECIFICATION --			
	SPECIFICATION NUMBER: 1NFY4_TSRev1.doc	AUTHOR: Hoskinson	TITLE: ENG	REL. DATE: 5/25/07
	GGS MODEL NUMBER(s): 1NFY4	DESCR PTION: Industrial thermometer	REVISION #: 1	REV. DATE: 8/10/07

1.0 BRAND:	No brand
2.0 PRODUCT DESCRIPTION:	Bimetal Industrial Thermometer

3.0 PRODUCT PHOTO(S):

4.0 PRODUCT REQUIREMENTS:

4.1 Features & Performance	Requirement
Temperature scale(s)	°F: 0 to 250 °C: -20 to 120
Connection location/type	Back; 1/2 inch NPT
Dial size (inches)	3
Stem length (inches)	2 1/2
Stem diameter (inches)	1/4 In
Rotated degrees	N/A
Angled degrees	N/A
Full scale accuracy	≤40°F: ±1.5% 41 to 200°F: ±1% ≥201°F: ±1.5%
Calibration	External Adjustment

4.2 Materials & Construction	Requirement
Case	Stainless Steel Hermetically Sealed to Prevent Icing/Fogging Inside
Stem	Stainless Steel
Coil dampening	Silicone for Superior Time Response and Vibration Dampening
Dial face	Glass

4.3 Finish / Color	Requirement
All Surface Finishes	a) Surface finishes must be uniform and continuous. The surface finish must not exhibit any visual defects such as blisters, rust, corrosion, scratches, peeling, bubbles, and/or cracking. b) All exposed surfaces must be free of burrs and sharp edges. c) All applied finishes must adhere to the surface and show no signs of delamination or peeling.
Finish	Stainless Steel

This specification is based on the manufacturers design and is to be used as a Quality Control document.

The information contained in this document may be privileged and confidential and protected from disclosure. You are hereby notified that any unauthorized dissemination, distribution or copying of this communication is strictly prohibited. If you have received this communication in error, please notify us immediately by telephone, delete any electronic copy and destroy any printed copy.

SERIES 1950 | EXPLOSION-PROOF DIFFERENTIAL PRESSURE SWITCH

FEATURES/BENEFITS

- **Explosion-proof and weatherproof housing provides device protection for outdoor use or harsh environment operation**
- **External set point screw provides easy access without opening or disassembling enclosure**
- **Easily accessible electrical connection simplifies the installation**

APPLICATIONS

- HVAC applications
- Process applications
- All-weather applications

DESCRIPTION

The **Series 1950 Explosion-Proof Differential Pressure Switch** combines the best features of the popular Dwyer® Series 1900 Pressure Switch with an integral explosion-proof and weatherproof housing, making it an exceptional value for either application. It is CE, UL and CSA listed, FM approved for use in Class I, Div 1, Groups C and D, Class II Groups E, F, and G and Class III hazardous atmospheres NEMA 7 & 9. Rain tight NEMA 3 (IP54), weatherproof features include a drain plug and O-ring seal in cover. Electrical connections are easily made by removing front cover. For convenience the set point adjustment screw is located on the outside of the housing. Twelve models offer set points from .03 to 20 in w.c. (0.0075 to 5 kPa) and from .5 to 60 psi (0.035 to 3.5 bar). The unit is very light and compact - about half the weight and bulk of other explosion-proof or weatherproof switches with separate enclosures.

SPECIFICATIONS

Service	Air and non-combustible, compatible gases.
Wetted Materials	Consult factory.
Temperature Limits	-40 to 140°F (-40 to 60°C); 0 to 140°F (-17.8 to 60°C) for 1950P-8, 15, 25, and 50. -30 to 130°F (-34.4 to 54.4°C) for 1950-02.
Pressure Limits (Continuous)	1950's - 45 in w.c. (0.11 bar); 1950P's - 35 psi (2.41 bar); 1950P-50 only - 70 psi (4.83 bar). Surge: 1950's - 10 psi (0.69 bar), 1950P's - 50 psi (3.45 bar), 1950P-50 only - 90 psi (6.21 bar).
Enclosure Rating	NEMA 3 (IP54), NEMA 7 & 9.
Switch Type	Single-pole double-throw (SPDT).
Electrical Rating	15 A @, 125, 250, 480 VAC, 60 Hz. Resistive 1/8 HP @ 125 VAC, 1/4 HP @ 250 VAC, 60 Hz.
Electrical Connections	3 screw type, common, normally open and normally closed.
Process Connections	1/8″ female NPT.
Mounting Orientation	Diaphragm in vertical position. Consult factory for other position orientations.
Set Point Adjustment	Screw type on top of housing.
Weight	3.25 lb (1.5 kg); 1950-02 model, 4.4 lb (2 kg).
Agency Approvals	CE, CSA, FM, UL.

DWYER INSTRUMENTS, INC.
T: 219-879-8000 | F: 219-872-9057 | info@dwyermail.com
800-872-9141

DIMENSIONS

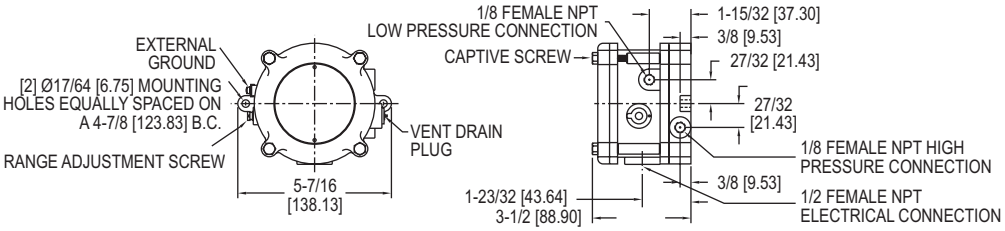

WIRING DIAGRAM

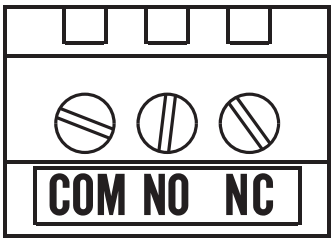

HOW TO ORDER

Use the **bold** characters from the chart below to construct a product code.

1950 **-02** **-2** **S** **-AT**

SWITCH TYPE
1950: Pressure switch - inches w.c.
1950P: Pressure switch - PSID

RANGE
-02: 0.03 - 0.10 in w.c.
-00: 0.07 - 0.15 in w.c.
-0: 0.15 - 0.5 in w.c.
-1: 0.4 - 1.6 in w.c.
-5: 1.4 - 5.5 in w.c.
-10: 3.0 - 11.0 in w.c.
-20: 4.0 - 20.0 in w.c.
-2: 0.5 - 2.0 psid
-8: 1.5 - 8.0 psid
-15: 3.0 - 15.0 psid
-25: 4.0 - 25.0 psid
-50: 15.0 - 50.0 psid

MICRO SWITCH TYPE
-2: 10G mica silver contact*
-6: 10G phenolic gold contact
-M: 10C phenolic silver contact

OPTIONS
-AT: Aluminum tag
-PRESET: Preset
-ST: Stainless steel tag

DIAPHRAGM MATERIAL
B: Buna-N
F: Flurosilicone*
N: Neoprene
S: Silicone
V: Fluroelastomer

*The 2F is standard

Important Notice: Dwyer Instruments, Inc. reserves the right to make changes to or discontinue any product or service identified in this publication without notice. Dwyer advises its customers to obtain the latest version of the relevant information to verify, before placing any orders, that the information being relied upon is current.

dwyer-inst.com

DWYER INSTRUMENTS, INC.
T: 219-879-8000 | F: 219-872-9057 | info@dwyermail.com
800-872-9141

Dwyer
SERIES 2000

MAGNEHELIC® DIFFERENTIAL PRESSURE GAGES

Indicate Positive, Negative or Differential, Accurate within 1%

5 YEAR LIMITED WARRANTY

Standard Magnehelic® Gage

High Accuracy Magnehelic® Gage
Note: Shown with optional -SS bezel

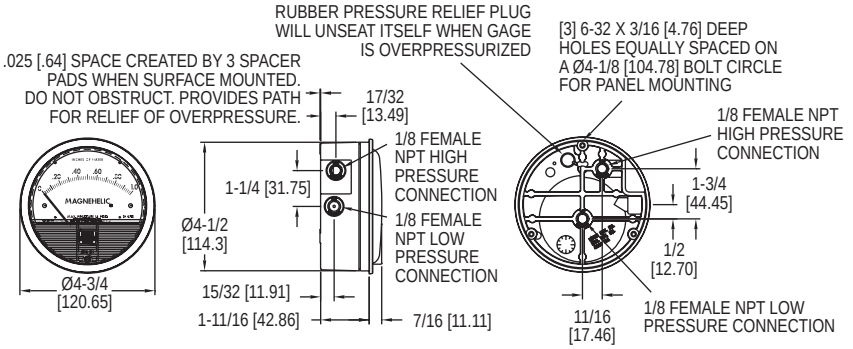

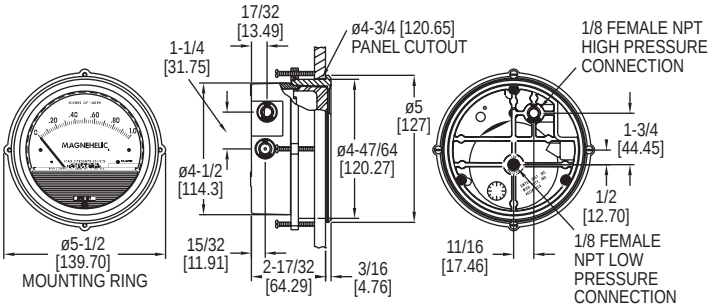

VIDEO ONLINE

Select the **Series 2000 Magnehelic® Differential Pressure Gages** for a versatile low differential pressure gage with a wide choice of 81 models and 27 options to choose from. Using Dwyer's simple, frictionless Magnehelic® gage movement, it quickly indicates air or non-corrosive gas pressures--either positive, negative (vacuum) or differential. The design resists shock, vibration, over-pressures and is weatherproof to IP67.
Select the –HA High Accuracy Magnehelic® gage option for an accuracy within 1% of full scale. Also included with the –HA option at no extra cost are a mirrored scale overlay and a 6 point calibration certificate.

FEATURES/BENEFITS

- Easy to read gage through undistorted plastic face permits viewing from far away
- Patented design provides quick response to pressure changes means no delay in assessing critical situations
- Durable and rugged housing and high-quality components combine to provide long-service life and minimized down-time
- High accuracy option is twice as accurate as the standard Magnehelic® gage

APPLICATIONS

- Filter monitoring
- Air velocity with Dwyer pitot tube
- Blower vacuum monitoring
- Fan pressure indication
- Duct, room or building pressures
- Clean room positive pressure indication

SPECIFICATIONS

Service: Air and non-combustible, compatible gases (natural gas option available). **Note:** May be used with hydrogen. Order a Buna-N diaphragm. Pressures must be less than 35 psi.
Wetted Materials: Consult factory.
Housing: Die cast aluminum case and bezel, with acrylic cover. Exterior finish is coated gray to withstand 168 hour salt spray corrosion test.
Accuracy: ±2% (-HA model ±1) of FS (±3% (-HA ±1.5%) on -0, -100PA, -125PA, -10MM and ±4% (-HA ±2%) on -00, -60PA, -6MM ranges), throughout range at 70°F (21.1°C).
Pressure Limits: -20 in Hg to 15 psig (-0.677 to 1.034 bar); MP option: 35 psig (2.41 bar); HP option: 80 psig (5.52 bar).
Enclosure Rating: IP67.
Overpressure: Relief plug opens at approximately 25 psig (1.72 bar), standard gages only.❶

Temperature Limits: 20 to 140°F* (-6.67 to 60°C). -20°F (-28°C) with low temperature option.
Size: 4″ (101.6 mm) diameter dial face.
Mounting Orientation: Diaphragm in vertical position. Consult factory for other position orientations.
Process Connections: 1/8″ female NPT duplicate high and low pressure taps - one pair side and one pair back.
Weight: 1 lb 2 oz (510 g), MP & HP 2 lb 2 oz (963 g).
Standard Accessories: Two 1/8″ NPT plugs for duplicate pressure taps, two 1/8″ pipe thread to rubber tubing adapter, and three flush mounting adapters with screws. (Mounting and snap ring retainer substituted for three adapters in MP & HP gage accessories.)
Agency Approvals: Meets the technical requirements of EU Directive 2011/65/EU (RoHS II). **Note:** -SP models not RoHS approved.

Note: For applications with high cycle rate within gage total pressure rating, next higher rating is recommended. See Medium and High pressure options.

*Low temperature models available as special options.

ACCESSORIES

Model	Description
A-432	Portable kit; combine carrying case with any Magnehelic® gage of standard range, except high pressure connection. Includes 9 ft (2.7 m) of 3/16″ ID rubber tubing, standhang bracket and terminal tube with holder
A-605	Air filter gage accessory kit; adapts any standard Magnehelic® gage for use as an air filter gage. Includes aluminum surface mounting bracket with screws, two 5 ft (1.5 m) lengths of 1/4″ aluminum tubing, two static pressure tips and two molded plastic vent valves, integral compression fittings on both tips and valves
A-605B	Air filter gage accessory kit; air filter kit with two plastic open/close valves, two 4″ steel static tips, plastic tubing and mounting flange
A-605C	Air filter gage accessory kit; air filter kit with two plastic open/close valves, two plastic static tips, plastic tubing and mounting flange

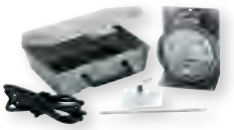

A-432

A-605

❶Over Protection Note: See page 21 (Series 2000)

MAGNEHELIC® DIFFERENTIAL PRESSURE GAGES

Indicate Positive, Negative or Differential, Accurate within 1%

Bezel provides flange for flush mounting in panel.

Clear plastic face is highly resistant to breakage. Provides undistorted viewing of pointer and scale.

Precision litho-printed scale is accurate and easy to read.

Calibrated range spring is flat spring steel. Small amplitude of motion assures consistency and long life. It reacts to pressure on diaphragm. Live length adjustable for calibration.

Red tipped pointer of heat treated aluminum tubing is easy to see. It is rigidly mounted on the helix shaft.

Pointer stops of molded rubber prevent pointer over-travel without damage.

"Wishbone" assembly provides mounting for helix, helix bearings and pointer shaft.

Jeweled bearings are shock-resistant mounted; provide virtually friction-free motion for helix. Motion damped with high viscosity silicone fluid.

Helix is precision made from an alloy of high magnetic permeability. Mounted in jeweled bearings, it turns freely, following the magnetic field to move the pointer across the scale.

Zero adjustment screw is conveniently located in the plastic cover, and is accessible without removing cover. O-ring seal provides pressure tightness.

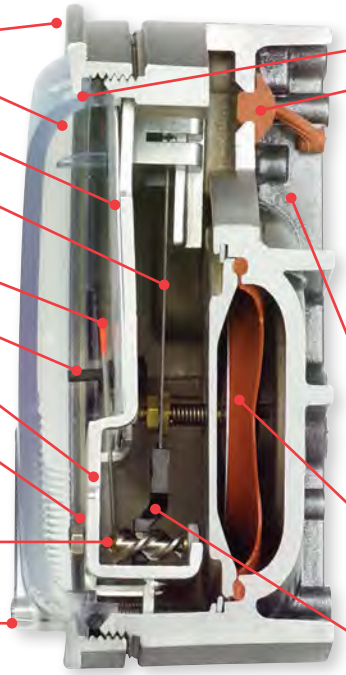

O-ring seal for cover assures pressure integrity of case.

OVERPRESSURE PROTECTION
Blowout plug is comprised of a rubber plug on the rear which functions as a relief valve by unseating and venting the gage interior when over pressure reaches approximately 25 psig (1.7 bar). To provide a free path for pressure relief, there are four spacer pads which maintain 0.023″ clearance when gage is surface mounted. Do not obstruct the gap created by these pads.
The blowout plug is not used on models above 180″ of water pressure, medium or high pressure models, or on gages which require an elastomer other than silicone for the diaphragm.
The blowout plug should not be used as a system overpressure control. High supply pressures may still cause the gage to fail due to over pressurization, resulting in property damage or serious injury. Good engineering practices should be utilized to prevent your system from exceeding the ratings of any component.

Die cast aluminum case is precision made and iridite-dipped to withstand 168 hour salt spray corrosion test. Exterior finished in baked dark gray hammerloid. One case size is used for all standard pressure options, and for both surface and flush mounting.

Silicone rubber diaphragm with integrally molded O-ring is supported by front and rear plates. It is locked and sealed in position with a sealing plate and retaining ring. Diaphragm motion is restricted to prevent damage due to overpressures.

Samarium Cobalt magnet mounted at one end of range spring rotates helix without mechanical linkages.

MODEL CHART

Model	Range, Inches of Water
2000-00N†••	.05-0-.2
2000-00†••	0-.25
2000-0†•	0-.50
2001	0-1.0
2002	0-2.0
2003	0-3.0
2004	0-4.0
2005	0-5.0
2006	0-6.0
2008	0-8.0
2010	0-10
2012	0-12
2015	0-15
2020	0-20
2025	0-25
2030	0-30
2040	0-40
2050	0-50
2060	0-60
2080	0-80
2100	0-100
2120	0-120
2150	0-150
2160	0-160
2180*	0-180
2250*	0-250
Zero Center Ranges	
2300-00†••	0.125-0-0.125
2300-0†•	.25-0-.25
2301	.5-0-.5
2302	1-0-1
2304	2-0-2
2310	5-0-5
2320	10-0-10
2330	15-0-15

Model	Range, PSI
2201	0-1
2202	0-2
2203	0-3
2204	0-4
2205	0-5
2210*	0-10
2215*	0-15
2220*	0-20
2230**	0-30

Model	Range, CM of Water
2000-15CM	0-15
2000-20CM	0-20
2000-25CM	0-25
2000-50CM	0-50
2000-80CM	0-80
2000-100CM	0-100
2000-150CM	0-150
2000-200CM	0-200
2000-250CM	0-250
2000-300CM	0-300
Zero Center Ranges	
2300-4CM	2-0-2
2300-10CM	5-0-5
2300-30CM	15-0-15

Model	Range, MM of Water
2000-6MM†••	0-6
2000-10MM†•	0-10
2000-15MM	0-15
2000-25MM	0-25
2000-30MM	0-30
2000-50MM	0-50
2000-80MM	0-80
2000-100MM	0-100
2000-125MM	0-125
2000-150MM	0-150
2000-200MM	0-200
2000-250MM	0-250
2000-300MM	0-300
Zero Center Ranges	
2300-6MM†••	3-0-3
2300-10MM†•	5-0-5
2300-20MM†•	10-0-10

Model	Range, Pa
2000-60NPA†••	10-0-50
2000-60PA†••	0-60
2000-100PA†•	0-100
2000-125PA†•	0-125
2000-250PA	0-250
2000-300PA	0-300
2000-500PA	0-500
2000-750PA	0-750
2000-1000PA	0-1000
Zero Center Ranges	
2300-60PA†••	30-0-30
2300-100PA†•	50-0-50
2300-120PA	60-0-60
2300-200PA	100-0-100
2300-250PA	125-0-125
2300-300PA	150-0-150
2300-500PA	250-0-250
2300-1000PA	500-0-500

Model	Range, kPa
2000-0.5KPA	0-0.5
2000-1KPA	0-1
2000-1.5KPA	0-1.5
2000-2KPA	0-2
2000-2.5KPA	0-2.5
2000-3KPA	0-3
2000-4KPA	0-4
2000-5KPA	0-5
2000-8KPA	0-8
2000-10KPA	0-10
2000-15KPA	0-15
2000-20KPA	0-20
2000-25KPA	0-25
2000-30KPA	0-30
Zero Center Ranges	
2300-1KPA	.5-0-.5
2300-2KPA	1-0-1
2300-2.5KPA	1.25-0-1.25
2300-3KPA	1.5-0-1.5

Dual Scale Air Velocity Units
For use with pitot tube

Model	Range, in w.c./ Velocity F.P.M.
2000-00AV†••	0-.25/ 300-2000
2000-0AV†•	0-.50/ 500-2800
2001AV	0-1.0/ 500-4000
2002AV	0-2.0/ 1000-5600
2005AV	0-5.0/ 2000-8800
2010AV	0-10/ 2000-12500

Dual Scale English/Metric Models

Model	Range, in w.c.	Range, Pa or kPa
2000-00D†••	0-.25	0-62 Pa
2000-0D†•	0-0.5	0-125 Pa
2001D	0-1.0	0-250 Pa
2002D	0-2.0	0-500 Pa
2003D	0-3.0	0-750 Pa
2004D	0-4.0	0-1.0 kPa
2005D	0-5.0	0-1.25 kPa
2006D	0-6.0	0-1.5 kPa
2008D	0-8.0	0-2.0 kPa
2010D	0-10	0-2.5 kPa
2015D	0-15	0-3.7 kPa
2020D	0-20	0-5 kPa
2025D	0-25	0-6.2 kPa
2050D	0-50	0-12.4 kPa
2060D	0-60	0-15 kPa

†These ranges calibrated for vertical scale position • Accuracy ±3% •• Accuracy ±4% *MP option standard **HP option standard

VELOCITY AND VOLUMETRIC FLOW UNITS
Scales are available on the Magnehelic® gage that read in velocity units (FPM, m/s) or volumetric flow units (SCFM, m^3/s, m^3/h). Stocked velocity units with dual range scales in inches w.c. and feet per minute are shown above. For other ranges contact the factory. When ordering volumetric flow scales please specify the maximum flow rate and its corresponding pressure.
Example: 0.5 in w.c. = 16,000 CFM.

ACCESSORIES

Model	Description
A-321	Safety relief valve
A-448	3-piece magnet kit for mounting Magnehelic® gage directly to magnetic surface
A-135	Rubber gasket for panel mounting
A-401	Plastic carry case
A-310A	3-way vent valves. In applications where pressure is continuous and the Magnehelic® gage is connected by metal or plastic tubing which cannot be easily removed, we suggest using Dwyer A-310A vent valves to connect gage. Pressure can then be removed to check or re-zero the gage.

A-310A

Dwyer

HIGH ACCURACY MAGNEHELIC® DIFFERENTIAL PRESSURE GAGE

5 YEAR LIMITED WARRANTY

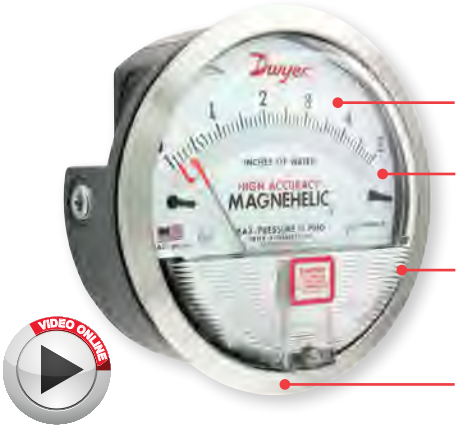

Twice as accurate as the standard Magnehelic® gage

Mirrored scale overlay eliminates parallax error

IP67 weatherproof housing

Optional brushed SS bezel

6-Point Calibration Certificate Included

OPTIONS - HIGH ACCURACY MAGNEHELIC® GAGE	
To order add suffix:	Description
-HA	High Accuracy Magnehelic® Gage. Accuracy within 1% and weatherproof. Also includes mirrored scale overlay and a six point calibration certificate
-SS	Corrosion resistant brushed 304 stainless steel bezel

Accuracy Specifications: See page 20 (Series 2000)

ADDITIONAL GAGE OPTIONS

OPTIONS - OTHER OPTIONAL BEZELS	
To order add suffix:	Description
-CB	Chrome bezel option: A chrome plated aluminum bezel for an aesthetically pleasing finish when mounting on metal surfaces such as control panels.
-SB	Stainless steel bezel option: 304 stainless steel electro polished Ra 16 finished bezel.
-SS	Corrosion resistant brushed 304 stainless steel bezel

LED Setpoint Indicator

Adjustable Signal Flag

Transparent Overlay

Mirrored Scale Overlay

Integrated Mounting Plate

OPTIONS - LED SETPOINT INDICATOR	
To order add suffix:	Description
-SP	Bright red LED on right scale shows when setpoint is reached. Field adjustable from gage face, unit operates on 12-24 VDC. Setpoint indicator option comes with medium pressure (MP) bezel.
Note: 4-13/16˝ hole for flush mounting.	
OPTIONS - ADJUSTABLE SIGNAL FLAG	
To order add suffix:	Description
-ASF	Integral with plastic gage cover. Available for most models except those with medium or high pressure construction. Can be ordered with gage or separate.
OPTIONS - TRANSPARENT OVERLAYS	
To order add suffix:	Description
-G	Green (to highlight and emphasize critical pressures)
-R	Red (to highlight and emphasize critical pressures)
-Y	Yellow (to highlight and emphasize critical pressures)
OPTIONS - MIRRORED SCALE OVERLAY	
To order add suffix:	Description
-M	A mirrored scale overlay is also available to assist in reducing parallax error.
OPTIONS - INTEGRATED MOUNTING PLATE	
To order add suffix:	Description
-AHU1	Furnished with attached surface mounting plate
-AHU2	Furnished with attached surface mounting plate and including A-481 installer kit (2 plastic static pressure tips and 7´of PVC tubing)

OPTIONS - FOR HIGH STATE PRESSURE APPLICATIONS	
To order add suffix:	Description
-HP	High pressure option: for pressures to 80 psig
-MP	Medium pressure option: for pressures to 35 psig

OPTIONS	
To order add suffix:	Description
-FC	Factory calibration certificate
-LT	Low temperatures to -20°F (-28°C)
-NIST	NIST traceable calibration certificate

MAGNEHELIC® GAGE MOUNTING ACCESSORIES

A-610

A-369

A-464

A-299

A-286

A-300

A-368

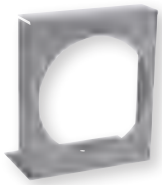

A-371

A single case size is used for most models of Magnehelic® gages. They can be flush or surface mounted with standard hardware supplied. Complete mounting and connection fittings plus instructions are furnished with each instrument. A 4-9/16″ hole is required for flush panel mounting.

Flush mounting is easily accomplished with the new A-300 Flush Mounting bracket. This bracket provides a solution to quickly and conveniently flush mount the Magnehelic® gage. The A-300 is ideal for mounting the Magnehelic® gage on control panel doors.

The A-368 is a simple bracket for quickly surface mounting the Magnehelic® gage. After securing the Magnehelic® gage to the A-368 bracket, mount the bracket on any flat surface.

The A-369 allows the Magnehelic® gage to be easily carried to locations where pressure readings need to be taken. The A-369 can stand on its own or hang on a nail or hook.

ACCESSORIES	
Model	**Description**
A-610	Pipe mounting kit for installing on 1-1/4″ to 2″ horizontal or vertical pipe
A-286	Magnehelic® gage panel mounting flange
A-369	Stand-hang bracket, aluminum, for Magnehelic® gage
A-300	Flush mounting bracket
A-464	Flush mount kit for Magnehelic® gage
A-368	Surface mounting plate, aluminum, for Magnehelic® gage
A-299	Mounting bracket, flush mount for Magnehelic® gage, bracket is then surface mounted, steel with gray hammerloid epoxy finish
A-371	Surface mounting bracket, use with medium pressure (-MP) or high pressure (-HP) models only

SERIES A-320

INSTRUMENT ENCLOSURES

Protects Various Instruments

A-320-A

A-320-A With Gage Installed

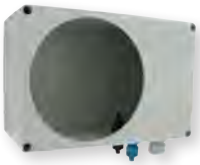

A-320-B

A-320-B With Gage Installed

Series A-320 Instrument Enclosures protect instruments in all applications. The A-320-A fits standard Magnehelic® size instruments (4-9/16″ diameter) and the A-320-B fits standard 3000MR Photohelic® switch/gage size instruments (4-13/16″ diameter). Both models include silicone tubing, gage barbs and mounting hardware.

MODEL CHART	
Model	**Compatible Instruments**
A-320-A	2000 Magnehelic® Gage, DM-1000 Digital Differential Pressure Gage, DM-2000 Differential Pressure Transmitter
A-320-B	3000MR Photohelic® Switch/Gage, Series 605 Magnehelic® Differential Pressure Transmitter, DH3 Digihelic® Pressure Controller, 2000 Magnehelic® Gage with medium and high pressure options

SPECIFICATIONS
Housing: ABS.
Process Connections: Anodized aluminum.
Enclosure Rating: NEMA 1 (IP10). Note: Check instruments rating.
Weight: Model A-320-A: 11.29 oz (320 g); A-320-B: 16.23 oz (420 g).
Gage Size Opening: A-320-A: 4-9/16 in (115.89 mm); A-320-B: 4-13/16 in (122.24 mm).

54 Series

PRESSURE, VACUUM AND TEMPERATURE

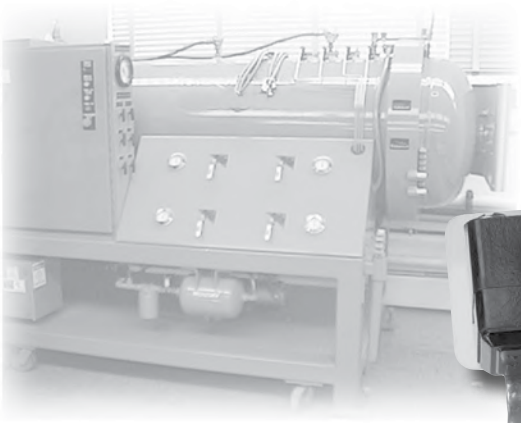

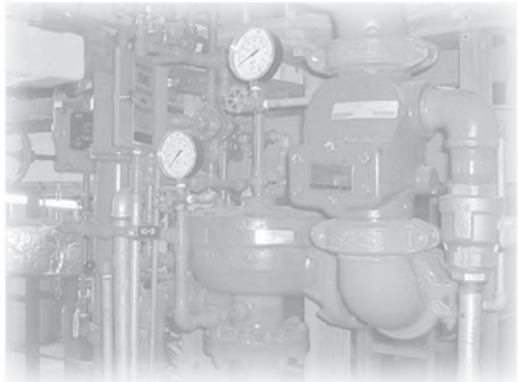

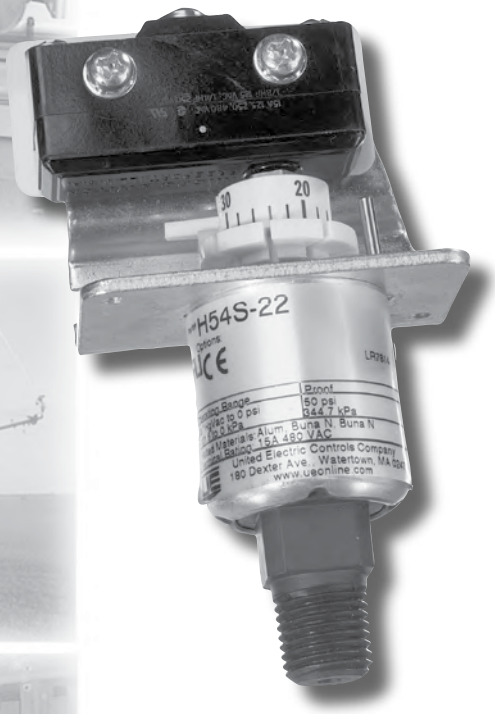

FEATURES

- **Compact Size**
- **Wide Selection of Adjustable Ranges:**
  Pressure: 30" Hg Vac to 6000 psi (-1 to 413,7 bar)
  Temperature: -130 to 650°F (-90 to 343.3°C)
- **Choice of One or Two Switch Outputs**
- **Adjustable or Narrow Deadband Options**
- **Reference Dial or Hex Screw-Type Setting**

OVERVIEW

The 54 Series offers the OEM a combination of reliable performance and low cost. Available in pressure and temperature versions, with single or dual SPDT outputs and enclosed or open frame (skeleton) construction, the 54 Series family provides design versatility.

The 54 has been field-proven in a wide variety of OEM applications, including medical, laboratory, fire protection and heating equipment.

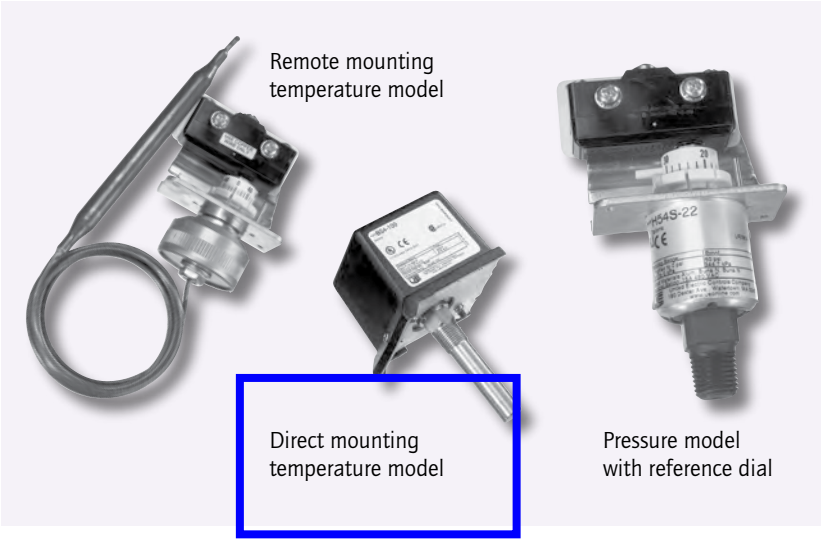

FEATURES

- Compact size
- Choice of one or two switch outputs
- Reference dial or hex screw-type setting
- Optional 1/2" NPT (male) by 1/8" NPT (female) polysulfone® pressure connection
- Optional external manual reset
- NEMA 1 or open frame (skeleton) versions for OEM applications
- Brass bellows models

Polysulfone® is a registered trademark of Amoco

SPECIFICATIONS

STORAGE TEMPERATURE	-65 to 160°F (-54 to 71°C)
AMBIENT TEMPERATURE LIMITS	
Pressure Models	Models 126-164, 610-614: -40 to 160°F (-40 to 71°C); Models 22-28: 0 to 160°F (-18 to 71°C)
Temperature Models	-40 to 160°F (-40 to 71°C). Set point typically shifts less than 1% of range for a 50°F (28°C) ambient temperature change.
SHOCK	Set point repeats after 15 G, 10 millisecond duration
VIBRATION	Set point repeats after 2.5 G, 5-500 CPS
ENCLOSURE CLASSIFICATION	Types C54, C54A, B54, F54, E54, J54, J54A, H54: complies with NEMA 1 requirements. Types C54S, B54S, F54S, E54S, J54S, J54AS, H54S: not applicable
SET POINT REPEATABILITY	
Pressure Models	Models 22-28, 126-164: ± 1% of adjustable range; Models 610-614: ± 1.5% of adjustable range
Temperature Models	± 1% of adjustable range
SWITCH OUTPUT	One or two SPDT snap action switch(es); dual switch may be separated up to 100% of range; switches may be wired "normally open" or "normally closed"
ELECTRICAL RATING	15A 125/250/480 VAC resistive. Electrical switches have limited DC capabilities. Consult UE for additional information.
ENCLOSURE MATERIAL	Lexan® black finish for Types J54, J54A, H54, B54, C54, C54A, E54, F54 only
WEIGHT	Approximately 12 oz.
ELECTRICAL CONNECTION	Types J54 & H54, C54, C54A, B54, E54, F54: 7/8" diameter hole; Type J54A: 1-1/16" diameter hole
PRESSURE CONNECTION	Models 22-28: 1/4" NPT (male); 126-164, 610-614: 1/4" NPT (female)
TEMPERATURE ASSEMBLY	Bulb and Capillary: 6 feet copper or 304 stainless steel capillary Immersion Stem: Brass
TEMPERATURE FILL	Non-toxic oil
TEMPERATURE DEADBAND	Typically 1% of range under laboratory conditions (70°F circulating bath at rate of 1/2°F per minute change)

APPROVALS

UNITED STATES AND CANADA

Type J54, J54A, H54
UL Listed, cUL Certifed
Pressure: UL 508, CSA C22.2 No. 14, file # E42272
Type J54S, J54AS, H54S
UL Recognized, cUL Recognized
Pressure: UL 508, CSA C22.2 No. 14, file #E42272

Type B54, C54, E54, F54
UL listed, CSA Certified
Temperature: UL 873, file # E10667;
CSA C22.2 No. 0 & 24, file # LR7814
Type B54S, C54S, E54S, F54S
UL Recognized, CSA Certified
Temperature: UL 873, file # E10667;
CSA C22.2 No. 0 & 24, file # LR7814

EUROPE

Low Voltage Directive (LVD) (73/23/ED & 93/68/EEC)
UEC compliant to LVD
Products rated lower than 50 VAC and 75 VDC are outside of the scope of the LVD

Pressure Equipment Directive (PED) (97/23/EC)
Compliant to PED
Products rated lower than 7.5 psi are outside the scope of the PED

Lexan® is a registered trademark of General Electric Company

TEMPERATURE MODEL CHART

Model	Adjustable Set Point Range		Max. Temperature		Scale*** Division		Stem Size
	°F	°C	°F	°C	°F	°C	NPT x BT (inches)
B54, B54S, C54, C54S, C54A, C54AS, Brass immersion stem							
103	0 to 225	-17.8 to 107.2	250	121.1	10	5	3/8 x 2-1/8
109	200 to 425	93.3 to 218.3	425	218.3	10	5	3/8 x 2-1/8
							OD x Length
E54, F54, Copper bulb and capillary							
D20BC	-130 to 120	-90 to 48.9	170	76.7	10	5	3/8 x 4-1/2
D21BC	0 to 150	-17.8 to 65.6	200	93.3	5	5	3/8 x 6-7/8
D22BC	50 to 300	10 to 148.9	350	176.7	10	5	3/8 x 4-1/2
D23BC	150 to 650	65.6 to 343.3	700	371.1	25	10	3/8 x 3-5/8
E54, F54, Stainless steel bulb and capillary							
D20BS‡	-130 to 120	-90 to 48.9	170	76.7	10	5	3/8 x 4-1/2
D21BS	0 to 150	-17.8 to 65.6	200	93.3	5	5	3/8 x 6-7/8
D22BS	50 to 300	10 to 148.9	350	176.7	10	5	3/8 x 4-1/2
D23BS	150 to 650	65.6 to 343.3	700	371.1	25	10	3/8 x 3-5/8
E54S, F54S, Copper bulb and capillary							
D21BC	0 to 150	-17.8 to 65.6	200	93.3	5	5	3/8 x 6-7/8
D22BC	50 to 300	10 to 148.9	350	176.7	10	5	3/8 x 4-1/2
D23BC	150 to 650	65.6 to 343.3	700	371.1	25	10	3/8 x 3-5/8
E54S, F54S, Stainless steel bulb and capillary							
D21BS	0 to 150	-17.8 to 65.6	200	93.3	5	5	3/8 x 6-7/8
D22BS	50 to 300	10 to 148.9	350	176.7	10	5	3/8 x 4-1/2
D23BS	150 to 650	65.6 to 343.3	700	371.1	25	10	3/8 x 3-5/8

‡ Not available Type F54
*** Applies to Types B54, B54S, E54, E54S only

DIMENSIONAL DRAWINGS

Temperature Models

Types B54, C54

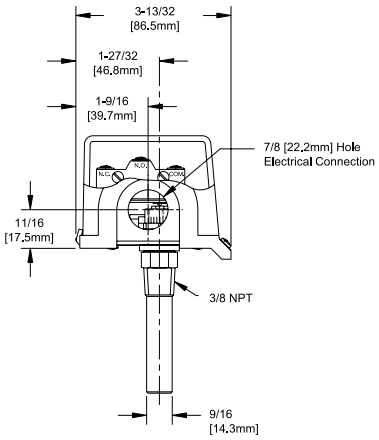

Type C54A

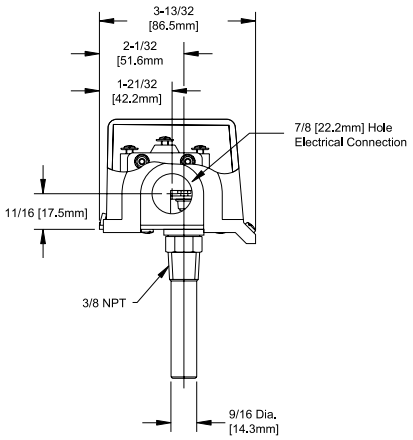

Types B54, C54, C54A

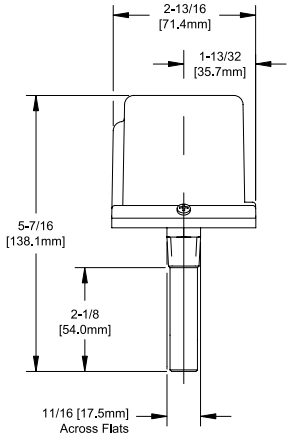

Type B54S

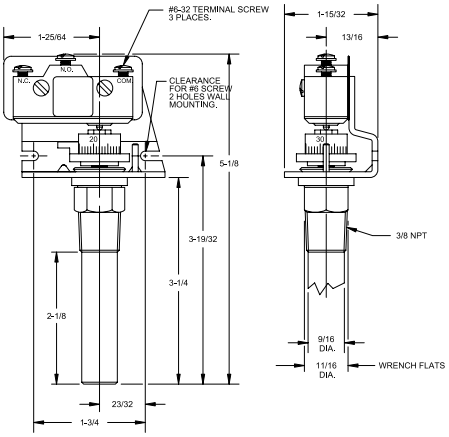

Type C54S

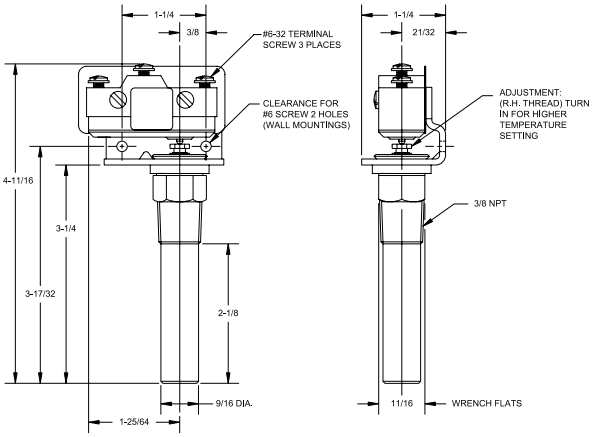

Type C54AS

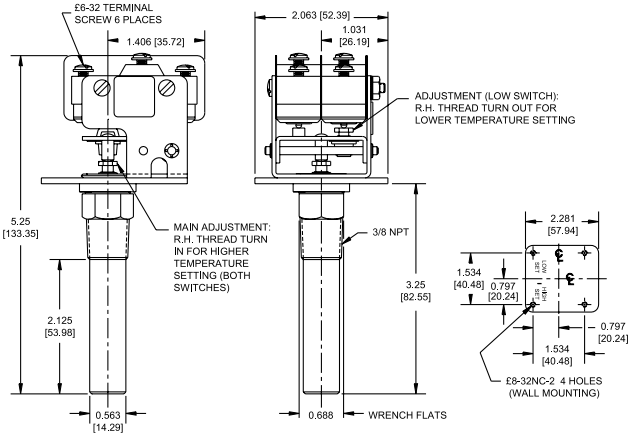

All dimensions stated in inches (millimeters)

SERIES LPG4

2.5″ LOW PRESSURE GAGE

1.5% Full-Scale Accuracy in a 2.5″ Gage

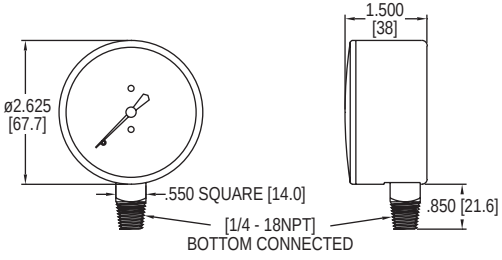

Our **Series LPG4 2.5″ Low Pressure Gage** offers top of the line performance and accuracy for pressure and vacuum applications up to and including 160 in w.c. The LPG4 is constructed from a single beryllium-copper diaphragm affixed to a precision-machined brass plate. This innovative design, together with a high-precision, milled-teeth brass movement and nickel-silver pinion and bearing surface, provide the user with a top of the line low pressure instrument.

FEATURES/BENEFITS

- Low pressure gage provides a selection to meet specific application
- Specifie with high ambient and process temperature ratings mean more robust uses and longer service-life
- High accuracy gage for applications requiring more precise measurement is a concern

APPLICATIONS

- Air flow indicatio
- Liquid level
- Draft measurement

SPECIFICATIONS

Service: Compatible gases & liquids.
Wetted Materials: Brass and beryllium copper.
Housing: Drawn steel, black finish
Lens: Polycarbonate (removable).
Accuracy: ±1.5% FS.
Pressure Limit: 100% of range scale.

Temperature Limits: Process: -40 to 160°F (-40 to 70°C); Ambient: -40 to 140°F (-40 to 60°C).
Size: 2.5″ (63 mm).
Process Connections: 1/4″ male NPT.
Enclosure Rating: NEMA 3 (IP54).
Weight: 7.3 oz (0.21 kg).

OPTIONS

Use order code:	Description
NISTCAL-PG1	NIST traceable calibration certificat

MODEL CHART

Model	Range	Model	Range
LPG4-D7122N	-10 to 0 in w.c. (-2.5 to 0 kPa)	**LPG4-D8322N**	0 to 40 in w.c. (0 to 10 kPa)
LPG4-D7222N	-15 to 0 in w.c. (-4 to 0 kPa)	**LPG4-D8422N**	0 to 60 in w.c. (0 to 15 kPa)
LPG4-D7322N	-25 to 0 in w.c. (-6 to 0 kPa)	**LPG4-D8522N**	0 to 80 in w.c. (0 to 20 kPa)
LPG4-D7422N	-40 to 0 in w.c. (-10 to 0 kPa)	**LPG4-D8622N**	0 to 100 in w.c. (0 to 25 kPa)
LPG4-D7522N	-60 to 0 in w.c. (-15 to 0 kPa)	**LPG4-D8722N**	0 to 160 in w.c. (0 to 40 kPa)
LPG4-D7622N	-80 to 0 in w.c. (-20 to 0 kPa)	**LPG4-D8922N**	-4 to 0 to 6 in w.c. (-1 to 0 to 1.5 kPa)
LPG4-D7722N	-100 to 0 in w.c. (-25 to 0 kPa)	**LPG4-D9022N**	-6 to 0 to 10 in w.c. (-1.5 to 0 to 2.5 kPa)
LPG4-D7822N	-160 to 0 in w.c. (-40 to 0 kPa)	**LPG4-D9122N**	-8 to 0 to 16 in w.c. (-2 to 0 to 4 kPa)
LPG4-D7922N	-235 to 0 in w.c. (-60 to 0 kPa)	**LPG4-D9222N**	-16 to 0 to 24 in w.c. (-4 to 0 to 6 kPa)
LPG4-D8022N	0 to 10 in w.c. (0 to 2.5 kPa)	**LPG4-D9322N**	-24 to 0 to 40 in w.c. (-6 to 0 to 10 kPa)
LPG4-D8122N	0 to 15 in w.c. (0 to 3.75 kPa)	**LPG4-D9422N**	-30 to 0 to 50 in w.c. (-7.5 to 0 to 12.5 kPa)
LPG4-D8222N	0 to 25 in w.c. (0 to 6 kPa)	**LPG4-D9522N**	-40 to 0 to 60 in w.c. (-10 to 0 to 15.0 kPa)

USA: California Proposition 65
⚠WARNING: Cancer and Reproductive Harm - www.P65Warnings.ca.gov

FPI SENSORS INTERNATIONAL

A HIGHER LEVEL OF SATISFACTION

Three Level Configurator – Build to Order

We excel in LOW COST » HIGH QUALITY » 72 HOUR MFG TIME

FPI SENSORS INTERNATIONAL — WE SHIP IN 72 HOURS — CUSTOM ORDERS

MANY OTHER VARIATIONS AND OPTIONS ARE AVAILABLE

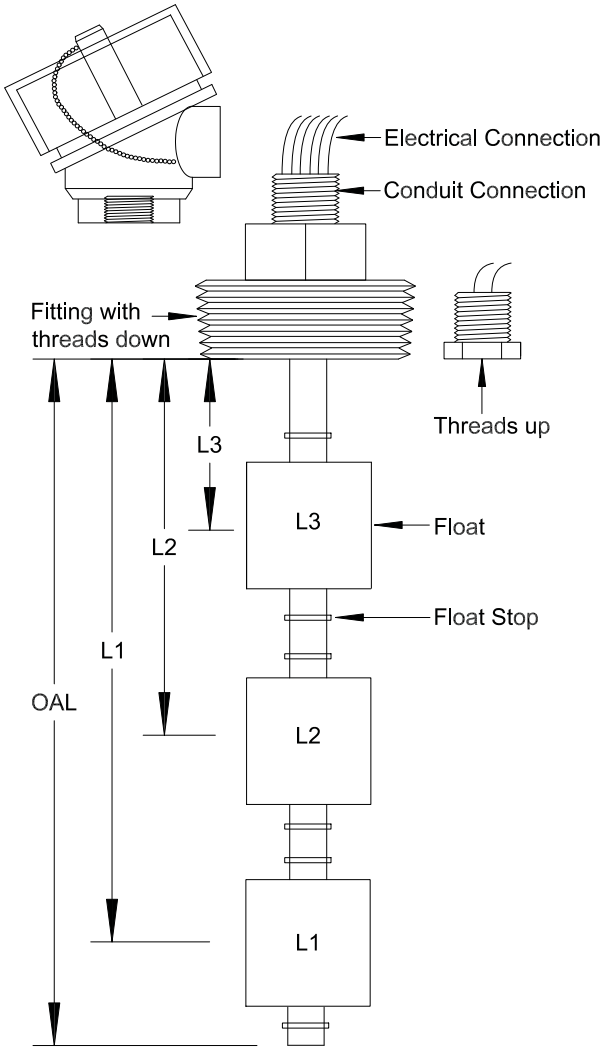

HOUSING:
❑ Nema 4X Explosion Proof ☒ Watertight ❑ NA

ELECTRICAL CONNECTION:
❑ Wire ☒ Cable ❑ Connector (specify) _____

CONDUIT CONNECTION:
☒ ½" NPT ❑ Other _____ ❑ NA

FITTING AND STEM MATERIAL:
☒ SS ❑ Brass ❑ PVC ❑ Poly ❑ Teflon

FITTING SIZE (NPT):
❑ ¼" ❑ ½" ❑ ¾" ❑ 1" ❑ 1¼" ❑ 1½" ☒ 2"
❑ Flange _____ ❑ Other _____

THREAD ORIENTATION:
☒ Threads down *(threads from outside of the tank)*
❑ Threads up *(threads from inside of the tank)*

LEAD LENGTH: 120 "

FLOAT STOPS:
❑ Retaining ring ☒ Set collar

FLOAT MATERIAL:
☒ SS ❑ Buna ❑ Poly ❑ Teflon ❑ PVC

SWITCH TYPE:
☒ SPST ❑ SPDT

SWITCH RATING:
❑ 10 watt (500ma) ☒ 50 watt (1 amp) ❑ 100 watt (3 amp)

ACTUATION:	**OPERATION:**	**SPECIFIC GRAVITY:**
L3 SEE DRAWING ~~M3~~ "	❑ N.O. ☒ N.C.	☒ .60sg ❑ .93sg
L2 "	☒ N.O. ❑ N.C.	☒ .60sg ❑ .93sg
L1 _____ "	☒ N.O. ❑ N.C.	☒ .60sg ❑ .93sg

Minimum actuation is 1" Maximum actuation is 235"

OPTIONS:
❑ Shroud
❑ Field Adjustable Length
❑ Thermocouple _____
❑ Temp Switch ❑ N.O. or ❑ N.C. _____ °F set point
☒ Centering Disk
❑ Compression Union
❑ Thermistor _____

1.800.852.9984

www.FPIsensors.com

info@FPIsensors.com

Fax 651.681.1888

SERIES SGY & SGZ

2.5″ INDUSTRIAL PRESSURE GAGE

1.5% FS Accuracy, 316 SS or Brass Wetted Parts, Dual PSI/Bar x100 kPa Scales

SGZ Bottom

SGZ Back with Accessory Pointers

SGY Bottom

SGY Back with Accessory Pointers

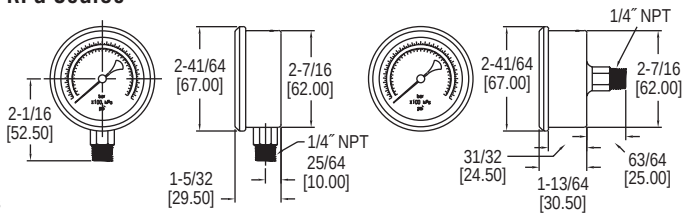

The **SERIES SGY & SGZ** Gages have dual psi and bar (x100 kPa) scales with ±1.5% full-scale accuracy. The Series SGZ and SGY gages are designed with 304 SS housings and the SGZ is designed with 316 SS wetted parts for excellent chemical compatibility or SGY brass wetted parts for compatible gases. These gages cover a wide variety of ranges in either bottom or back connection configurations. Series SGZ gages employ an easy-open breather plug on top, which allows liquid filled units to breathe, relieving any built up internal pressures. Plug easily pops open and does not need to be entirely removed or cut like a typical gages' rubber plug grommet.

FEATURES/BENEFITS

- Stainless steel housing and wetted parts to resist ambient corrosion for longer service life in harsh environments
- Higher accuracy gage for value-sensitive applications requiring more precise measurement and where vibration is a concern
- Optional sliding pointer clearly mark to make visible critical ranges and high and low points
- Liquid fil able gage with easy open breather plug provides smoother damped movement of pointer
- Back or bottom mounting and compact size provides for mounting with dimensional limitations

ACCESSORIES

Model	Description
A-445D	U-bracket mounting kit for 2.5″ gage
A-499R	Red sliding color pointer
A-499Y	Yellow sliding color pointer
A-499G	Green sliding color pointer

OPTIONS

Use order code:	Description
NISTCAL-PG1	NIST traceable calibration certificat

SPECIFICATIONS

Service: Compatible gases and liquids.
Wetted Materials: SGZ: 316 L SS Tube, 316 SS connector; SGY: Brass connection, bronze tube.
Housing: 304 SS.
Lens: Polycarbonate.
Accuracy: ±1.5% FS.
Pressure Limit: FS range.

Temperature Limits: -4 to 140°F (-20 to 60°C).
Size: 2.5″ (63 mm).
Process Connections: 1/4″ male NPT.
Weight: 4.9 oz (141 g) bottom, 5.8 oz (164 g) back. Add 3.7 oz (104 g) for glycerin fill

APPLICATIONS

- Vacuums in pneumatic conveying lines
- Positive pressure in compressed air headers
- Corrosive ambient environments

MODEL CHART

Model	Range	Model	Range
SGZ-D10122N	30″ Hg to 0	**SGY-D10122N**	30″ Hg to 0
SGZ-D10322N	0 to 30 psi	**SGY-D10322N**	0 to 30 psi
SGZ-D10422N	0 to 60 psi	**SGY-D10422N**	0 to 60 psi
SGZ-D10522N	0 to 100 psi	**SGY-D10522N**	0 to 100 psi
SGZ-D10622N	0 to 160 psi	**SGY-D10622N**	0 to 160 psi
SGZ-D10722N	0 to 200 psi	**SGY-D10722N**	0 to 200 psi
SGZ-D11022N	0 to 300 psi	**SGY-D11022N**	0 to 300 psi
SGZ-D11122N	0 to 500 psi	**SGY-D11122N**	0 to 500 psi
SGZ-D11222N	0 to 1000 psi	**SGY-D11222N**	0 to 1000 psi

Note: To order with glycerin fill, add -GF to the end of the model. For back connect, change 22N to 42N.

USA: California Proposition 65
⚠WARNING: Cancer and Reproductive Harm - www.P65Warnings.ca.gov

Installation Notes - Do not subject reed switch controls to excessive shock or vibration or any of the following:

- Bending or placing force loads on reed switch housing.
- Over-torquing fittings on reed switch housing.
- Placing pull-out force on lead wires.

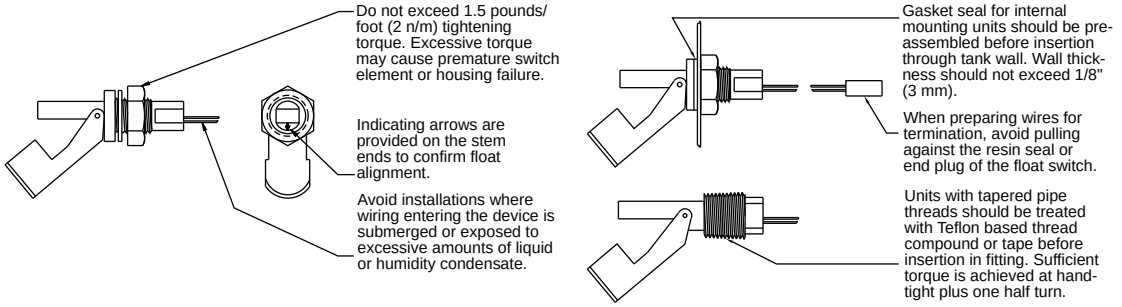

CIRCUIT INFORMATION FOR REED SWITCH PROTECTION

Read information below before installing your new reed switch control!

Exceeding the current capacity of this Reed Switch control may cause FAULTY OPERATION! Be aware of the inductive and capacitive or lamp loads you may be placing on you Reed Switch Control. The circuits below outline possible solutions to preventing overloads due to inrush or surge currents exceeding maximum or when the switch current and product of the inductive back EMF exceed the switch's power rating. Also the circuit for prevention of overload when switching filament lamps (low "cold" resistance) is outlined below. Failure to follow these measures to protect Reed Switch Contacts may cause the contacts to weld together or result in premature wear.

Possible Circuit Solutions Indicated by Dashed Lines

Inductive Loads

Possible causes -

An electromagnetic relay, electromagnetic solenoid, electromagnetic counter with inductive component as circuit load.

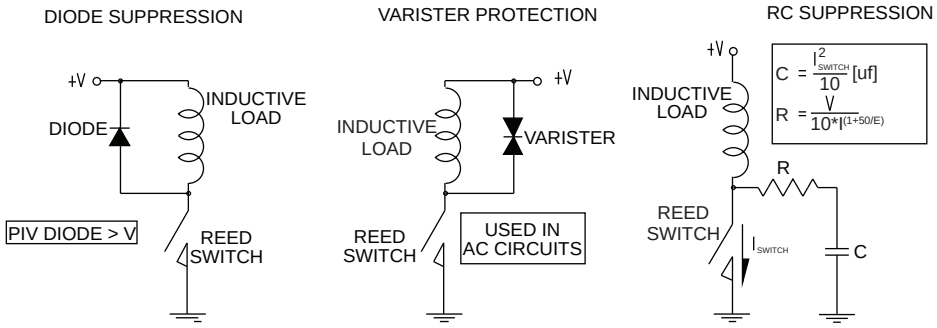

Capacitive Loads

Possible causes -

A capacitor connected in series or parallel with Reed Switch control. In a closed circuit, a cable length (usually greater than 50m [162.5 ft.]) used to connect reed switch may also introduce static capacitance.

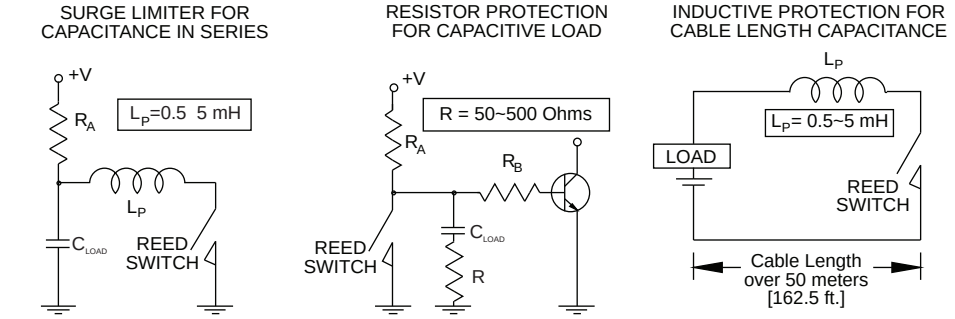

Lamp Loads

Possible causes -

A tungsten filament lamp load.

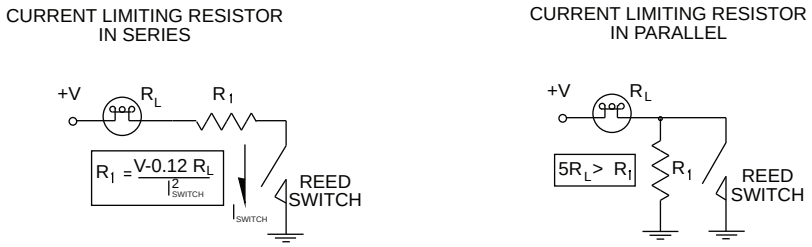

©Copyright 2014 Dwyer Instruments, Inc.

Printed in U.S.A. 7/14

FR# 82-440677-00 Rev. 5

DWYER INSTRUMENTS, INC.
P.O. BOX 373 • MICHIGAN CITY, INDIANA 46360, U.S.A.
Phone: 219/879-8000
Fax: 219/872-9057
www.dwyer-inst.com
e-mail: info@dwyermail.com

TABLE 2

INTERLOCK SCHEDULE
NES 19-120, REVISION 0 (08-14-2019) BY: RB
MEDLEY AIR / SSDS & SVE EQUIPMENT
12 ECKFORD ST [aka 470 MANHATTAN AVE] - BROOKLYN, NY

Interlock	Interlock ID	Interlock Description	B-101, SSD Blower	B-201, SVE Blower	P-201, MS Effluent Pump	**OPERATOR INTERFACE**	Adjustable Set Point (HMI Screen Display)	Alarm Notification (HMI Screen Display)	Alarm Notification (Local Panel Display)	Manual Reset	Control Panel Reset (Warning / Alarm)	Remote Alarm Notification	Alarm Log	Data Log (10 Minutes)	**INSTRUMENT TYPE**	**TIME DELAY**	**NES FACTORY SET POINT**	**TESTED BY**
		Emergency Stop	O	O	O			Y	Y	Y		Y	Y		D			
1		No alarms present	I	I														
2	VSL-101	SSDS Vacuum Switch Low	O					Y	Y		Y	Y	Y		D	15 Sec		
3	VSL-202	SVE Vacuum Switch Low		O				Y	Y		Y	Y	Y		D	15 Sec		
4	LSL-201	Moisture Separator Level Switch Low			O										D			
5	LSH-201	Moisture Separator Level Switch High			I										D			
6	LSHH-201	Moisture Separator Level Switch High-High		O				Y	Y		Y	Y	Y		D			
7	TSH-201	SVE Blower High Discharge Temperature		O				Y	Y		Y	Y	Y		D			
8	LSHH-201	Condensate Storage Drum Level Switch High-High		O	O			Y	Y		Y	Y	Y		D			
9	VFD-FREQ	SSD Blower VFD Speed Reference					Y								A			
10	VFD-SPD	SSD Blower VFD Speed												Y	A			
11	VFD-FREQ	SVE Blower VFD Speed Reference					Y								A			
12	VFD-SPD	Sve Blower VFD Speed												Y	A			
13	VFD-FLT	SSD Blower VFD Fault	O					Y	Y		Y	Y	Y		D			
14	VFD-FLT	SVE Blower VFD Fault		O				Y	Y		Y	Y	Y		D			
15	P-201 OL	MS Effluent Pump Overload			O			Y	Y		Y	Y	Y		D			
16	PWR-FLT	Main Electrical Power Fault	O	O	O			Y	Y			Y	Y		D			
17	PWR	Main Electrical Power Restored						Y	Y			Y	Y		L			

Note:

HMI - Human Machine Interface

O - Off
I - On

Y - Yes

A - Analog
D - Digital
L - Internal Logic

RapidTech LLC d/b/a National Environmental Systems
84 Dunham Street - Attleboro, MA 02703
Phone: (508)226-1100; Fax: (508)226-1180; Email: Info@nes-inc.biz

PANEL EXTERIOR

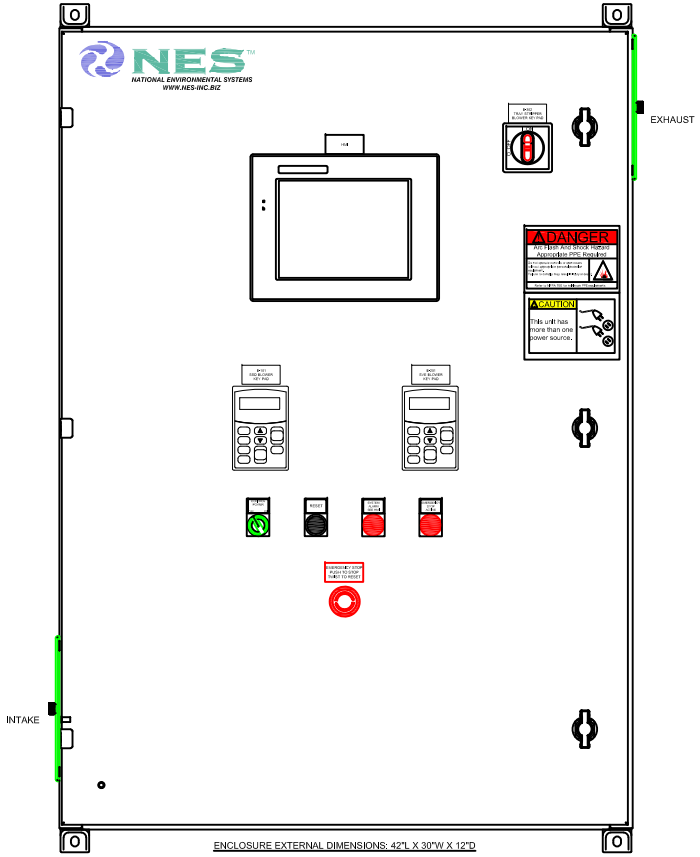

ENCLOSURE EXTERNAL DIMENSIONS: 42"L X 30"W X 12"D

OPERATOR DETAILS

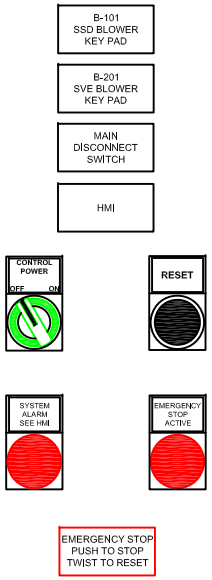

PANEL INTERIOR

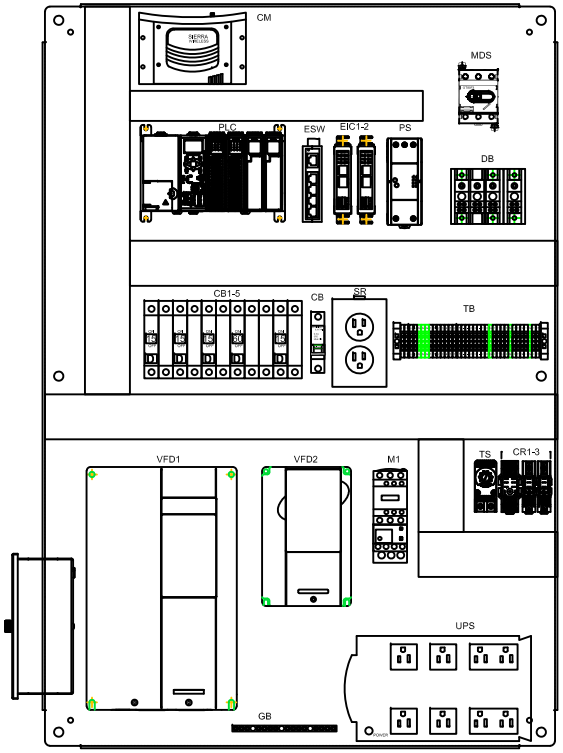

LEGEND	
ABBREV.	DESCRIPTION
CB	- CIRCUIT BREAKER
CM	- CELLULAR MODEM
CR	- CONTROL RELAY
DB	- DISTRIBUTION BLOCK
EIC	- ETHERNET INTERFACE CARD
ESW	- ETHERNET SWITCH
GB	- GROUND BAR
HMI	- HUMAN MACHINE INTERFACE
M	- MOTOR STARTER
MDS	- MAIN DISCONNECT SWITCH
PLC	- PROGRAMMABLE LOGIC CONTROLLER
PS	- POWER SUPPLY
SR	- SERVICE RECEPTACLE
TB	- TERMINAL BLOCK
TS	- TEMPERATURE SWITCH
UPS	- UNINTERRUPTED POWER SUPPLY
VFD	- VARIABLE FREQUENCY DRIVE

NOTES:
1) REFER TO TABLE 3 FOR BILL OF MATERIALS.
2) H/O/A FOR PROCESS EQUIPMENT VIA HMI SCREEN.
3) CONTROL PANEL IS UL 508A LISTED.
4) GROUND IN ACCORDANCE WITH N.E.C. ARTICLE 250.122 & LOCAL AUTHORITY HAVING JURISDICTION.

REV	DESCRIPTION	DATE	APPROVED
0	PRE-CONSTRUCTION - SUBMITTAL APPROVAL REQUIRED	06-14-19	EMB

REVISIONS

CONFIDENTIALITY NOTICE:
The information contained in this drawing is intended for use only by National Environmental Systems and Medley Air Inc. The information is confidential and any copying, distribution or dissemination without the written consent of National Environmental Systems is STRICTLY PROHIBITED.

NES
NATIONAL ENVIRONMENTAL SYSTEMS
84 DUNHAM STREET / ATTLEBORO, MA 02703
508-226-1100 (Phone) / 508-226-1180 (Fax)
WWW.NES-INC.COM

DRWN BY: EMB	DATE: 06-09-19	TITLE: PANEL INTERIOR / EXTERIOR LAYOUT			
CHK BY	DATE	MEDLEY AIR / SSDS & SVE EQUIPMENT 12 ECKFORD ST [AKA 470 MANHATTAN AVE] - BROOKLYN, NY		JOB NO. 19-120	
APPR BY	DATE	SCALE: NTS	SIZE: C	DWG NO. I-1	SHEET 1 OF 1 / REV 0

TABLE 3
PANEL BILL OF MATERIALS

REV 0 AUGUST 14, 2019

19-120 MEDLEY AIR / SSDS & SVE EQUIPMENT - 12 ECKFORD ST [aka 470 MANHATTAN AVE] - BROOKLYN, NY

TAG	QUANTITY	ITEM	MODEL	MANUFACTURER
		SECTION 8 - CONTROL PANEL COMPONENTS		
ENCL	1	ENCLOSURE NEMA4 42 X 30 X 12 - MILD STEEL/LIGHT GRAY	SCE-42EL3012LP	SAGINAW
ENCL	1	BACK-PANEL 42 X 30 MILD STEEL/WHT	SCE-42P30	SAGINAW
ENCL	1	MOUNTING FEET SET OF 4 - ZINC PLATED	SCE-ELMFK4	SAGINAW
ENCL	2	PANEL WING-KNOB PAD-LOCKING HANDLE BLACK	SCE-PLWKB	SAGINAW
MDS	1	NON-FUSED THROUGH DOOR DISCONNECT 3-PHASE 80 AMP	OT80F3	ABB
MDS	1	NON-FUSED THROUGH DOOR DISCONNECT SHAFT 13 IN	OXS6X330	ABB
MDS	1	NON-FUSED THROUGH DOOR DISCONNECT HANDLE NEMA3R	OHBS2AJ	ABB
DB	1	POWER DISTRIBUTION BLOCK 175 AMP 3-POLE 600 VAC	9080-LBA362104	SQUARE D
DB	1	COVER DISTRIBUTION BLOCK 3-POLE	9080-LB23	SQUARE D
DB	1	DISTRIBUTION BLOCK 175 AMP 1-POLE 600 VAC	9080-LBA162104	SQUARE D
DB	1	COVER DISTRIBUTION BLOCK 1-POLE	9080-LB21	SQUARE D
CB	1	SSD CIRCUIT BREAKER 15 AMPS 3-POLE 208/240 VAC	QOU315	SQUARE D
CB	1	SVE CIRCUIT BREAKER 60 AMPS 3-POLE 208/240 VAC	QOU360	SQUARE D
CB	1	MS PUMP CIRCUIT BREAKER 15 AMPS 3-POLE 208/240 VAC	QOU315	SQUARE D
CB	1	SVE ENCLOSURE VENT FAN CIRCUIT BREAKER 15 AMPS 1-POLE 208/240 VAC	QOU115	SQUARE D
VFD	1	SSD BLOWER VFD 2 HP 7 AMP 230V 3-PHASE	GS3-22PO	ADI
VFD	1	SVE BLOWER VFD 10 HP 33 AMP 230V 3-PHASE	GS3-2010	ADI
VFD	2	GS3 VFD FLUSH MOUNT BEZEL FOR KEYPAD	GS3-BZL	ADI
VFD	2	DURAPULSE REMOTE VFD KEYPAD CABLE 9.9 FT	GS-CBL2-3L	ADI
VFD	2	ETHERNET MODULE 100Mbps FOR GS SERIES AC DRIVES	GS-EDRV100	ADI
CR	2	RELAY DPDT 120VAC W/INDICATOR LIGHT	RH2B-UL-AC120V	IDEC
CR	2	SOCKET DIN RAIL/SURFACE 8-BLADE FOR RH2B	SH2B-05	IDEC
PS	1	POWER SUPPLY, 24VDC, 5A, 120W DIN MOUNT, 85-264VAC, 105-260VDC INPUT	PS5R-VF24	IDEC
ESW	1	5-PORT ETHERNET SWITCH UN-MANAGED	EDS-205	MOXA
CM	1	4G WIRELESS MODEM / GATEWAY EVDO - VERIZON	ES450 / AL-1102383	SIERRA WIRELESS
CM	1	SIERRA WIRELESS AIRLINK DC POWER AND I/O CABLE - ES/GX/LS/MP/RV	AL-2000522	SIERRA WIRELESS
CM	1	MULTI-BAND 3G-4G-LTE 3 TO 5 DBI OMNI-DIRECTIONAL ANTENNA, 10 FT CABLE	ANT-121-002	PROXICAST
UPS	1	UPS, 600VA, 420W, 120 VAC, 4 UPS & SURGE & 4 SURGE ONLY	CP600LCD	CYBERPOWER
HMI	1	C-MORE TOUCH PANEL 8 IN COLOR TFT ETHERNET & USB	EA9-T8CL	ADI
HMI	1	C-MORE CABLE PANEL TO ADI PLC RJ12 PORT 10 FT RS232	EA-2CBL	ADI
HMI	1	C-MORE AC DC POWER ADAPTER FOR EA7 & EA9	EA-AC	ADI
HMI	1	HMI MEMORY CARD 8 GB NON-VOLATILE DATA STORAGE	SDSDB008GAW46	SANDISK
PLC	1	4-SLOT I/O BASE FOR P2000	P2-04B	ADI
PLC	1	POWER SUPPLY 100-240VAC FOR P2000 PLC	P2-01AC	ADI
PLC	1	CPU 266 MHz PROCESSOR 50MB MEMORY WITH MICRO SD CARD SLOT FOR P2000	P2-550	ADI
PLC	1	16PT 12-24VDC INPUT SINK/SOURCE FOR P2000 PAC	P2-16ND3-1	ADI
PLC	1	16PT RELAY OUTPUT SPST 6-27VDC / 6-240VAC FOR P2000	P2-16TR	ADI
PLC	2	TERMINAL BLOCK FOR ALL 8 & 16 POINT I/O MODULES FOR P2000 PAC	P2-RTB	ADI
PLC	2	FILLER MODULE FOR P2000 PAC	P2-FILL	ADI
SR	1	MULBERRY 1-GANG, DUPLEX DEVICE RECEPTACLE WALLPLATE	MUL97101	MULBERRY
SR	1	DUPLEX RECEPTACLE, RESIDENTIAL GRADE, 15A, 125V, NEMA 5-15R	PAS3232-BK	PASS & SEYMOUR
SR	1	1-GANG WEATHERPROOF RECEPT. BOX	IHD3- 1	RED DOT
M	1	TRANSFER PUMP MOTOR STARTER CONTACTOR 3PST-NO 120VAC 20A DIN RAIL	LC1D09G7	SQUARE D
M	1	MOTOR STARTER OVERLOAD RELAY, 3-PHASE, 1.6 - 2.5 AMP	LRD07	SQUARE D
CB	1	CONTROL POWER CIRCUIT BREAKER 6A 1-POLE 120/240 VAC	MG24430	SQUARE D

TABLE 3
PANEL BILL OF MATERIALS

19-120 MEDLEY AIR / SSDS & SVE EQUIPMENT - 12 ECKFORD ST [aka 470 MANHATTAN AVE] - BROOKLYN, NY

TAG	QUANTITY	ITEM	MODEL	MANUFACTURER
SW	1	2 POS SELECTOR SWITCH ILLUM. GREEN MAINTAINED	ZB5AK1233	SQUARE D
LT	1	MOUNTING BASE120V GREEN PROTECTED LED	ZB5AVG3	SQUARE D
PB	1	PUSH BUTTON OPERATOR NON-ILLUM BLACK	ZB5AA2	SQUARE D
ESTOP	2	E-STOP MUSHROOM SWITCH RED TRIGGER ACTION - TURN TO RELEASE	ZB5AS844	SQUARE D
PB	2	MOUNTING COLLAR LATCH PB	ZB5AZ009	SQUARE D
PB	2	CONTACT BLOCK 1-N.O. SCREW CLAMP	ZBE101	SQUARE D
PB	1	CONTACT BLOCK 1-N.C. SCREW CLAMP	ZBE102	SQUARE D
LT	2	PILOT LIGHT HEAD RED LED	ZB5AV043	SQUARE D
LT	2	MOUNTING BASE 120V RED PROTECTED LED	ZB5AVG4	SQUARE D
LT	1	PILOT LIGHT HEAD - YELLOW	ZB5AV053	SQUARE D
SW	1	MOUNTING BASE120V YELLOW PROTECTED LED	ZB5AVG5	SQUARE D
TB	4	TERMINAL BLOCK END ANCHORS	NSYTRAABV35	SQUARE D
TB	40	TERMINAL BLOCK SCREW CLAMP 20 AMP 600 V GRAY	NSYTRV22	SQUARE D
TB	5	TERMINAL BLOCK GROUND SCREW CLAMP 20 AMP 600 V GREEN	NSYTRV22PE	SQUARE D
TB	2	TERMINAL BLOCK END BARRIERS GRAY	NSYTRAC22	SQUARE D
PB	5	LEGEND PLATE HOLDER	ZBZ33	SQUARE D
PB	8	BLANK PLATE LARGE BLACK/RED	ZBY5101	SQUARE D
GB	1	LOAD CENTER GROUND BAR 15 TERMINALS	PK15GTA	SQUARE D

TABLE 4
208 3 PHASE

ELECTRICAL LOAD CALCULATION COMMERCIAL BUILDING 208 V, 3 PHASE
2017 NATIONAL ELECTRICAL CODE

Customer:	Medley Air / AKRF Eng.	Serial #	19-120
Project:	12 Eckford St. Brooklyn NY	Revision 1	8/12/2019 KWB

A. Lighting Loads

1. Interior continuous lighting load

	sq. ft. x		VA/sq. ft. x 125%=	0 VA

Interior noncontinuous lighting load

	sq. ft x	3	VA/sq. ft =	0 VA

Use actual lighting load if greater

	VA actual continuous x 125% =	0 VA
	VA actual noncontinuous =	0 VA

2. Exterior lighting load

	VA x		fixtures x 125%=	0 VA

B. Receptacle Loads

1. Noncontinuous duty:

	Number of receptacles x 180 VA=	0 VA

2. Continuous Duty

	Number of receptacles x 180 VA x 125%	0 VA

C. Heating, A/C and Motor loads

1. Larger of heating or A/C load. If 3 phase, first multiply 1.732

	VA x 125%=	0 VA

	Continuous motor loads	
	Total VA x 125%=	0 VA
	Noncontinuous motor load VA=	0 VA

For 3 phase motors:

	Continuous motor loads	
8320	Total VA x 1.732 x 125%=	18013 VA
	Noncontinuous motor loads	
520	Total VA x 1.732=	900.64 VA

D. Largest Motor Load

1. Largest motor load from C above x 25 %. If 3 phase, first multiply by 1.732

11600.24	VA x 25%	2900.061 VA

E. Additional Loads

1. Nameplate VA ratings for additional continuous loads. If 3 phase, first multiply by 1.732

1380	Total VA x 125% =	1725 VA

2. Nameplate VA rating for additional noncontinuous loads. If 3 phase, first multiply by 1.732

	Total VA=	0 VA

Total VA =	23538.5 VA
Total amps =	65 A

Electrical Service Connection **80** amps is suitable

A continuous load is a load where maximum current is expected to continue for 3 or more hours

RapidTech LLC d/b/a National Environmental Systems
84 Dunham Street - Attleboro, MA 02703
(508) 226-1100 / info@nes-inc.biz

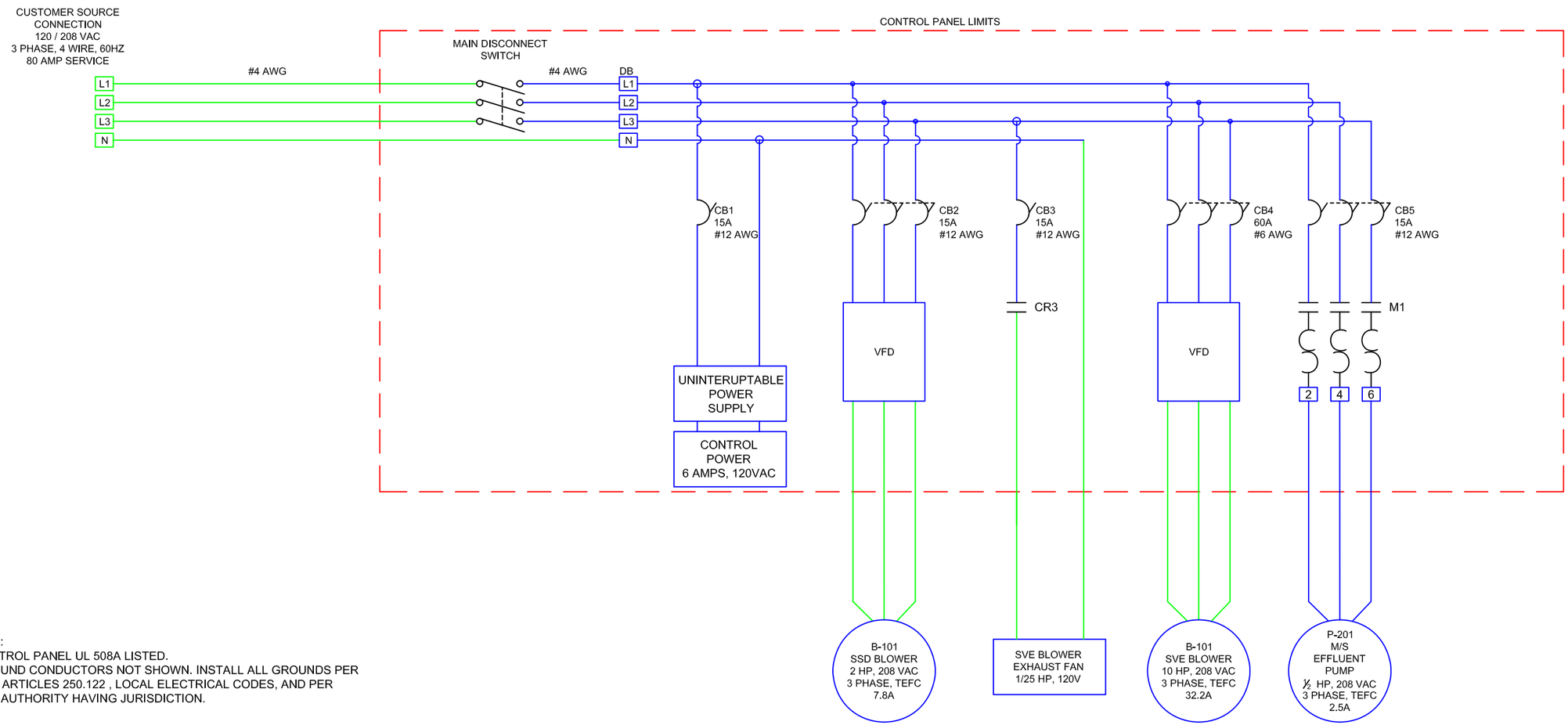

NOTES:
1. CONTROL PANEL UL 508A LISTED.
2. GROUND CONDUCTORS NOT SHOWN. INSTALL ALL GROUNDS PER NEC ARTICLES 250.122 , LOCAL ELECTRICAL CODES, AND PER THE AUTHORITY HAVING JURISDICTION.

LEGEND	
ABBREV.	DESCRIPTION
AWG	AMERICAN WIRE GAUGE
CB	CIRCUIT BREAKER
CR	CONTROL RELAY
DB	DISTRIBUTION BLOCK
M	MOTOR STARTER
TSTAT	THERMOSTAT
VFD	VARIABLE FREQUENCY DRIVE
————	CUSTOMER CONNECTIONS
– – – –	CONTROL PANEL LIMIT

REV	DESCRIPTION	DATE	APPROVED
0	PRE-CONSTRUCTION / SUBMITTAL APPROVAL REQUIRED	08-14-19	EMB

REVISIONS

CONFIDENTIALITY NOTICE:
The information contained in this drawing is intended for use only by National Environmental Systems and Medley Air Inc. The information is confidential and any copying, distribution or dissemination without the written consent of National Environmental Systems is STRICTLY PROHIBITED.

NES™
NATIONAL ENVIRONMENTAL SYSTEMS
84 DUNHAM STREET / ATTLEBORO, MA 02703
508-226-1100 (Phone) / 508-226-1180 (Fax)
WWW.NES-INC.COM

DRWN BY: EMB	DATE: 08-09-19	TITLE: LINE DIAGRAM			
CHK BY	DATE	MEDLEY AIR / SSDS & SVE EQUIPMENT 12 ECKFORD ST [aka 470 MANHATTAN AVE] BROOKLYN, NY	JOB NO. 19-120		
APPR BY	DATE	SCALE: NTS	SIZE: B	DWG NO. E-1	SHEET 1 OF 1 / REV 0

Your Enclosure Source ®

Saginaw Control and Engineering
95 Midland Road Saginaw, MI 48638-5770
(800) 234-6871 - Fax: (989) 799-4524
SCE@SaginawControl.com

SCE-42EL3012LP

Product Specifications:

Part Number: SCE-42EL3012LP
Description: EL Enclosure
Height: 42.00"
Width: 30.00"
Depth: 12.00"
Price Code: E3
List Price: $496.98
Catalog Page: 90
Est. Ship Weight: 111.00 lbs

Construction
- 0.075 In. carbon steel.
- Seams continuously welded and ground smooth.
- Flange trough collar around all sides of door opening.
- Pour in place oil & water resistant gasket
- Collar studs provided for mounting optional panels.
- Concealed hinges.
- Removable and interchangeable doors.
- Black quarter turn latches.
- Latches are opened or closed with a screwdriver.
- Mounting holes in back of enclosure.
- Mounting hardware, sealing washer and hole plug included.
- Removable print pocket furnished if height and width of enclosure is greater than 12 inches.
- Ground studs on door and body.

Application
Designed to house electrical and electronic controls, instruments and components. Provides protection from dust, oil and water. For outdoor application a drip shield is recommended.

Options
- Optional tamper-resistant inserts are available. - Optional mounting feet available. - Door hardware available. - Interchangeable latches and handles available in the accessory section.

Finish
ANSI-61 gray powder coating inside and out. Optional sub-panels are powder coated white.

Industry Standards - (IS4)
- NEMA Type 3R, 4, 12 and Type 13
- UL Listed Type 3R, 4 and 12
- CSA Type 3R, 4 and 12
- IEC 60529
- IP 66

Notes
Provision for Lifting Lugs will be included on enclosures with Height >48" and with Depth >16". The Lifting Lug assembly will be included with the enclosure bolt pack.

Special Instructions apply for IS3, IS4 and IS6 to maintain the environmental rating of Type 3R for these parts. Instructions are located on the enclosure door. Drip shield is required on IS3, drip shield is recommended on IS4 and IS6. Drain holes are required on all.

Optional Accessories
SCE-42P30 Subpanel, Bent
SCE-42P30GALV Subpanel, Bent Galvanized
SCE-BVK Breather Vent
SCE-DF42EL30LP Panel, Dead Front (Wall Mount)
SCE-DS30N4 Shield, Drip
SCE-ELMFK4 Foot Kit, EL Mounting (4pc.)
SCE-ELSP3 KIT, Swing-Out Panel (20 High & Up)

Similar Part Numbers
SCE-30EL2008LPEL Enclosure
SCE-30EL2010LPEL Enclosure
SCE-30EL2406LPEL Enclosure
SCE-30EL2408LPEL Enclosure
SCE-30EL2410LPEL Enclosure
SCE-30EL2412LPEL Enclosure
SCE-30EL2416LPEL Enclosure
SCE-30EL2420LPEL Enclosure
SCE-30EL2424LPEL Enclosure
SCE-30EL3008LPEL Enclosure

Installation Information
- Mounting Foot Kit for Enviroline Enclosures
- Sealing Washer Specifications
- EL Flush Mount Frame
- Drip Shield Kit Assembly
- Dead Front Wall Mount Installation Instructions
- Swing Panel Assembly for Enviroline Enclosures
- Swing Panel ELSP for Encl. Height > 16
- Dead Front Wall Mount < 20 In Height Installation Instructions
- Swing Panel ELSP for Encl. Height <= 16
- Service Parts Wall Mount Enclosures

OT80F3

OT80F3 SWITCH-DISCONNECTOR

General Information

Extended Product Type	OT80F3
Product ID	1SCA105798R1001
EAN	6417019397016
Catalog Description	OT80F3 SWITCH-DISCONNECTOR
Long Description	3-pole, front operated, base mounted, DIN-rail mountable switch-diconnector / non-fusible diconnect switch with protected clamp terminals, handle and shaft are not included
Lock Type	No

Popular Downloads

Data Sheet, Technical Information	1SCC301020C0201
Instructions and Manuals	1SCC301064M0212
Mechanical Drawings	1SCC301450F0001 1SCC301449F0001 OT63-80F3.stp OT63-80F3.igs

Dimensions

Product Net Width	52.5 mm
Product Net Height	91.5 mm
Product Net Depth / Length	72.5 mm
Product Net Weight	0.25 kg

Technical

Rated Operational Current AC-21A (I_e)	(380 ... 415 V) 80 A (500 V) 80 A (690 V) 80 A
Rated Operational Current AC-22A (I_e)	(380 ... 415 V) 80 A (500 V) 80 A (690 V) 80 A
Rated Operational Current AC-23A (I_e)	(380 ... 415 V) 75 A (500 V) 58 A (690 V) 20 A
Rated Operational Power AC-23A (P_e)	(220 ... 240 V) 22 kW (400 ... 415 V) 37 kW (500 V) 37 kW (690 V) 18.5 kW
Conventional Free-air Thermal Current (I_{th})	q = 40 °C 80 A

Conventional Thermal Current (I_{the})	Fully Enclosed 80 A
Rated Impulse Withstand Voltage (U_{imp})	8 kV
Rated Insulation Voltage (U_i)	acc. to IEC/EN 60664-1 750 V
Rated Operational Voltage	Main Circuit 750 V
Rated Short-Circuit Making Capacity (I_{cm})	(690 V) 2.1 kA
Rated Short-time Withstand Current (I_{cw})	for 1 s 1.5 kA
Power Loss	at Rated Operating Conditions per Pole 4.5 W
Pollution Degree	3
Handle Type	Knob Handle and shaft not included
Switches Operating Mechanism	Mechanism on Top of the Switch
Distance Between Phases	Standard
Position of Line Terminals	Top In - Bottom Out Bottom In - Top Out
Operating Mode	Front operated
Standards	IEC 60947-3 / UL 508 / CSA C22.2 No. 14
Special Functions	No
Mounting Type	Base mounting
Number of Poles	3
Cable Cross-Section	1.5...35 mm²
Degree of Protection	Front IP20
Terminal Type	Screw Terminals
Tightening Torque	acc. IEC 60947-1 2 N·m
Mechanical Durability	20000

—

Technical UL/CSA

Maximum Operating Voltage UL/CSA	600 V
Horsepower Rating UL/CSA	(110 ... 120 V AC) Single Phase 2 Hp (240 V AC) Single Phase 10 Hp (440 ... 480 V AC) Single Phase 20 Hp (550 ... 600 V AC) Single Phase 20 Hp (220 ... 240 V AC) Three Phase 20 Hp (440 ... 480 V AC) Three Phase 40 Hp (550 ... 600 V AC) Three Phase 40 Hp
Ampere Rating UL/CSA	80 A
Tightening Torque UL/CSA	18 in·lb

—

Environmental

RoHS Status	Following EU Directive 2011/65/EU
Environmental Information	1SCC301183D0201

—

Certificates and Declarations (Document Number)

Declaration of Conformity - CE	1SCC301167D2704
Environmental Information	1SCC301183D0201
Instructions and Manuals	1SCC301064M0212
RoHS Information	1SCC301183D0202

—

DURAPULSE GS3 AC Drives – Introduction

DURAPULSE GS3 AC Drives																
Motor Rating	HP	1	2	3	5	7.5	10	15	20	25	30	40	50	60	75	100
	kW	0.75	1.5	2.2	3.7	5.5	7.5	11	15	18.5	22	30	37	45	55	75
230V Single-Phase Input / 230V Three-Phase Output		✔	✔	✔												
230V Three-Phase Input / Output		✔	✔	✔	✔	✔	✔	✔	✔	✔	✔	✔	✔			
460V Three-Phase Input / Output		✔	✔	✔	✔	✔	✔	✔	✔	✔	✔	✔	✔	✔	✔	✔

Overview

The *DURAPULSE* series of AC drives offers all of the features of our GS2 series of drives including dynamic braking, PID, removable keypad and RS-485 Modbus communication. The *DURAPULSE* AC drive also offers sensorless vector control with the option of encoder feedback for enhanced speed control. The standard **smart** keypad (or Human Interface Module) is designed with defaults for the North American customer and allows you to configure the drive, set the speed, start and stop the drive, and monitor critical parameters for your application. In addition, this keypad has internal memory that allows **four** complete programs to be stored and transferred to any *DURAPULSE* drive. The *DURAPULSE* series offers three analog inputs, eleven digital inputs, and one SPDT relay output.

Features

- Simple Volts/Hertz control
- Sensorless vector control with autotune
- Sensorless vector control with optional encoder feedback card, for better speed control
- Sinusoidal pulse width modulation (PWM)
- Variable carrier frequency, depending on model
- IGBT technology
- Starting torque: 125% @ 0.5 Hz/150% @ 1Hz
- 150% rated current for one minute
- Electronic overload protection
- Stall prevention
- Adjustable accel and decel ramps with linear and S-curve settings
- Automatic torque and slip compensation
- Internal dynamic braking circuit for models under 20 hp; optional baking units available for models 20 hp and above
- DC braking
- Five skip frequencies
- Trip history
- Programmable jog speed
- Integral PID control
- Removable **smart** keypad with parameter upload/download
- Keypad with memory to store up to four programs of any *DURAPULSE* drive
- Eleven programmable digital inputs
- Three programmable analog inputs
- Three digital and one SPDT relay programmable outputs
- One programmable analog output
- One digital frequency output
- RS-485 Modbus communications
- Ethernet communication optional
- Two-year warranty
- UL/cUL/CE listed

Accessories

- AC line reactors
- EMI filters
- RF filter
- Braking resistors
- Braking units (for models 20 hp and above)
- Fuse kits and replacement fuses
- Replacement cooling fans
- Remote panel adapter
- Replacement keypad
- Keypad cables in 1, 3, and 5-meter lengths
- Ethernet interface
- Four and eight-port RS-485 multi-drop termination boards
- KEP***Direct*** I/O or OPC Server
- GSoft drive configuration software
- GS3-FB – feedback card
- GS-485HD15-CBL – ***ZIP***Link RS485 communication cable for connection to the DL06 and D2-260 15-pin ports
- USB-485M – USB to RS-485 PC adapter (see "Communications Products" chapter for detailed information)

Detailed descriptions and specifications for GS accessories are available in the "GS/ DURAPULSE Accessories" section.

Typical Applications

- Conveyors
- Fans
- Pumps
- Compressors
- HVAC
- Material handling
- Mixing
- Shop tools
- Extruding
- Grinding

DURAPULSE GS3 AC Drives Specifications

230V Class													
Model Name: GS3-xxx			**21P0**	**22P0**	**23P0**	**25P0**	**27P5**	**2010**	**2015**	**2020**	**2025**	**2030**	**2040**	**2050**
Price			$250.00	$303.00	$360.00	$414.00	$569.00	$722.00	$920.00	$1,143.00	$1,343.00	$1,538.00	$2,253.00	$2,817.00
Output Rating	**Max Motor Output**	**HP**	1.0	2.0	3.0	5.0	7.5	10	15	20	25	30	40	50
		kW	0.75	1.5	2.2	3.7	5.5	7.5	11	15	18.5	22	30	37
	Rated Output Current (A)		5	7	11	17	25	33	49	65	75	90	120	145
	Max Output Voltage		Three-phase 200 to 240V (proportional to input voltage)											
	Rated Frequency		0.1 to 400 Hz											
*** Input Rating**	**Rated Voltage/Frequency**		Single/Three-phase			Three-phase								
			200/208/220/230/240 VAC, 50/60Hz											
	Rated Input Current (A)		11.9 / 5.7	15.3 / 7.6	22 / 15.5	20.6	26	34	50	60	75	90	110	142
Voltage/Frequency Tolerance			Voltage: ± 10% Frequency: ± 5%											
Watt Loss @ 100% I (W)			60	82	130	194	301	380	660	750	920	1300	1340	1430
Weight (lb [kg])			4.5 [2.034]	4.5 [2.034]	9.4 [4.24]	9.4 [4.24]	13.3 [6.031]	13.3 [6.031]	14.3 [6.487]	26.5 [12]	26.5 [12]	26.5 [12]	77.2 [35]	77.2 [35]

** All 3-phase power sources must be symmetrical.*
Do not connect any DURAPULSE drives to grounded, center-tapped delta transformers (which are typically used for lighting circuits).

460V Class – Three-Phase																
Model Name: GS3-xxx			**41P0**	**42P0**	**43P0**	**45P0**	**47P5**	**4010**	**4015**	**4020**	**4025**	**4030**	**4040**	**4050**	**4060**	**4075**	**4100**
Price			$334.00	$373.00	$399.00	$442.00	$634.00	$760.00	$991.00	$1,206.00	$1,432.00	$1,625.00	$2,072.00	$2,522.00	$2,887.00	$3,240.00	$3,621.00
Output Rating	**Maximum Motor Output**	**HP**	1	2	3	5	7.5	10	15	20	25	30	40	50	60	75	100
		kW	0.75	1.5	2.2	3.7	5.5	7.5	11	15	18.5	22	30	37	45	55	75
	Rated Output Current (A)		2.7	4.2	5.5	8.5	13	18	24	32	38	45	60	73	91	110	150
	Maximum Output Voltage		Three-phase 380 to 480V (proportional to input voltage)														
	Rated Frequency		0.1 to 400 Hz														
***Input Rating**	**Rated Voltage/ Frequency**		Three-phase, 380/400/415/440/460/480VAC, 50/60Hz														
	Rated Input Current (A)		3.2	4.3	5.9	11.2	14	19	25	32	39	49	60	63	90	130	160
Voltage/Frequency Tolerance			Voltage: ± 10% Frequency: ± 5%														
Watt Loss @ 100% I (W)			70	102	132	176	250	345	445	620	788	1290	1420	1680	2020	2910	3840
Weight (lb [kg])			3.9 [1.759]	4.4 [1.994]	4.1 [1.857]	9.4 [4.24]	13.2 [6.002]	13.5 [6.106]	14.4 [6.525]	26.5 [12]	26.5 [12]	26.5 [12]	77.2 [35]	77.2 [35]	77.2 [35]	116.8 [53]	116.8 [53]

** All 3-phase power sources must be symmetrical.*
Do not connect any DURAPULSE drives to grounded, center-tapped delta transformers (which are typically used for lighting circuits).

DURAPULSE GS3 AC Drives General Specifications

General Specifications			
Control Characteristics			
Control System			Pulse Width Modulation, Carrier frequency adjustable from 1–15 kHz depending on the model. This system determines the control methods of the AC drive. 00: V/Hz open loop control 01: V/Hz closed loop control 02: Sensorless Vector 03: Sensorless Vector with external feedback
Rated Output Frequency			0.1 to 400.0 Hz
Output Frequency Resolution			0.1 Hz
Overload Capacity			150% of rated current for 1 minute
Torque Characteristics			Includes auto-torque boost, auto-slip compensation, starting torque 125% @ 0.5 Hz / 150% @ 1.0 Hz
Braking Torque			20% without braking resistor, 125% with optional braking resistor (braking circuit built-in only for units under 20 hp)
DC Braking			Operation frequency 60–0 Hz, 0–100% rated current, Start time 0.0–5.0 seconds, Stop time 0.0–25.0 seconds
Acceleration/Deceleration Time			0.1 to 600 seconds (linear or non-linear acceleration/deceleration), second acceleration/deceleration available
Voltage/Frequency Pattern			Settings available for Constant Torque - low & high starting torque, Variable Torque - low & high starting torque, and user configured
Stall Prevention Level			20 to 200% of rated current
Operation Specifications			
Inputs	Frequency Setting	Keypad	Setting by <UP> or <DOWN> buttons
		External Signal	Potentiometer - 3 to 5 kΩ, 0 to 10 VDC (input impedance 10 kΩ), -10 to +10 VDC, 4 to 20 mA (input impedance 250Ω), 0 to 20 mA; Multi-Speed Inputs 1 to 4, RS-232C/RS-485 communication interface
	Operation Setting	Keypad	Setting by <RUN>, <STOP>, <JOG> , <FWD>, <REV> buttons
		External Signal	Forward/Stop, Reverse/Stop (run/stop, fwd/rev), 3-wire control, Serial Communication RS-232C & RS-485 (Modbus RTU)
	Input Terminals	Digital Sink/Source Selectable	11 user-programmable: FWD/STOP, REV/STOP, RUN/STOP, REV/FWD, RUN momentary (N.O.), STOP momentary (N.C.), External Fault (N.O./N.C.), External Reset, Multi-Speed Bit (1-4), Manual Keyboard Control, Jog, External Base Block (N.O./N.C.), Second Accel/Decel Time, Speed Hold, Increase Speed, Decrease Speed, Reset Speed to Zero, PID Disable (N.O.), PID Disable (N.C.), Input Disable
		Analog	3 user-configurable, 0 to 10V (input impedance 10 kΩ), 0 to 20 mA, 4 to 20 mA (input impedance 250Ω), 10 bit resolution -10V to +10V, 10 bit resolution
Outputs	Output Terminals	Digital 3 transistors 1 relay	4 user-programmable: Inverter Running, Inverter Fault, At Speed, Zero Speed, Above Desired Frequency, Below Desired Frequency, At Maximum Speed, Over Torque Detected, Above Desired Current, Below Desired Current, PID Deviation Alarm, Heatsink Overheat Warning (OH), Soft Braking Signal, Above desired Frequency 2, Below desired Frequency 2, Encoder Loss
		Digital Square Wave	One digital square wave output representing drive frequency
		Analog	1 user-programmable, 0 to 10V, 8 bit resolution frequency, current, process variable PV
Operating Functions			Automatic voltage regulation, voltage/frequency characteristics selection, non-linear acceleration/deceleration, upper and lower frequency limiters, 15-stage speed operation, adjustable carrier frequency (1 to 15 kHz), PID control, 5 skip frequencies, analog gain & bias adjustment, jog, electronic thermal relay, automatic torque boost, trip history, software protection
Protective Functions			Electronic Thermal, Overload Relay, Auto Restart after Fault, Momentary Power Loss, Reverse Operation Inhibit, Auto Voltage Regulation, Over-Voltage Stall Prevention, Auto Adjustable Accel/Decel, Over-Torque Detection Mode, Over-Torque Detection Level, Over-Torque Detection Time, Over-Current Stall Prevention during Acceleration, Over-Current Stall Prevention during Operation
Operator Interface	Operator Devices		9-key, 2 line x 16 character LCD display, 5 status LEDs
	Programming		Parameter values for setup and review, fault codes
	Status Display		Output Frequency, Motor Speed, Scaled Frequency, Output Current, Motor Load, Output Voltage, DC Bus Voltage, PID Setpoint, PID Feedback, Frequency Setpoint
	Key Functions		RUN, STOP/RESET, FWD/REV, PROGRAM, DISPLAY, <UP>, <DOWN>, ENTER
Environment	Enclosure Rating		Protected Chassis, IP20
	Ambient Temperature		-10°C to 40°C (14°F to 104°F)
	Storage Temperature		-20°C to 60°C (-4°F to 140°F) – during short term transportation period
	Ambient Humidity		20 to 90% RH (non-condensing)
	Vibration		9.8 m/s^2 (1G) less than 10 Hz; 5.9 m/s^2 (0.6G) 10 to 60 Hz
	Installation Location		Altitude 1000m or lower above sea level, keep from corrosive gas, liquid and dust
Options			Noise filter, input AC reactor, output AC reactor, cable for remote operator, programming software, dynamic braking resistor, dynamic braking unit; RF filter; remote panel adapter; Ethernet interface; four and eight port RS-485 multi-drop termination boards, replacement keypads, fuse kits and replacement fuses

DURAPULSE GS3 AC Drives Specifications – Installation

Understanding the installation requirements for your DURAPULSE AC drive will help to ensure that it operates within its environmental and electrical limits.

Note: Never use only this catalog for installation instructions or operation of equipment; refer to the user manual, GS3-M.

Environmental Specifications	
Protective Structure [1]	IP20
Ambient Operating Temperature [2]	-10 to 40°C (14°F to 104°F)
Storage Temperature [3]	-20 to 60°C (-4°F to 140°F)
Humidity	To 90% (no condensation)
Vibration [4]	9.8 m/s² (1g), less than 10 Hz 5.9 m/s² (0.6g),10 to 60 Hz
Location	Altitude 1,000 m or less, indoors (no corrosive gases, liquids or dust)

1: Protective structure is based upon EN60529

2: The ambient temperature must be in the range of -10° to 40°C. If the range will be up to 50°C, you will need to set the carrier frequency to 2.1 kHz or less and derate the output current to 80% or less.

3: The storage temperature refers to the short-term temperature during transport.

4: Conforms to the test method specified in JIS CO911 (1984)

Watt-loss Chart	
GS3 Drive Model	***At full load***
GS3-21P0	60
GS3-22P0	82
GS3-23P0	130
GS3-25P0	194
GS3-27P5	301
GS3-2010	380
GS3-2015	660
GS3-2020	750
GS3-2025	920
GS3-2030	1300
GS3-2040	1340
GS3-2050	1430
GS3-41P0	70
GS3-42P0	102
GS3-43P0	132
GS3-45P0	176
GS3-47P5	250
GS3-4010	345
GS3-4015	445
GS3-4020	620
GS3-4025	788
GS3-4030	1290
GS3-4040	1420
GS3-4050	1680
GS3-4060	2020
GS3-4075	2910
GS3-4100	3840

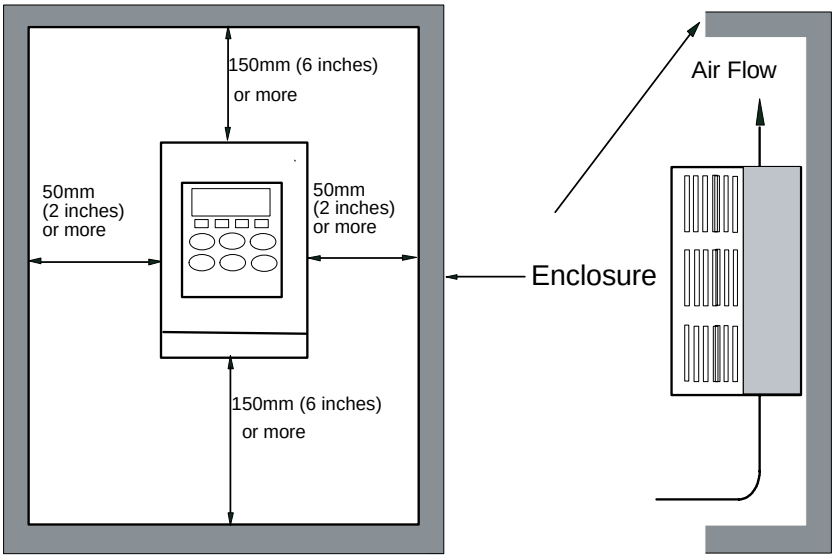

Minimum Clearances and Air Flow

Warning: AC drives generate a large amount of heat which may damage the AC drive. Auxiliary cooling methods are typically required in order not to exceed maximum ambient temperatures.

Warning: Maximum ambient temperatures must not exceed 50°C (122°F), or 40°C (104°F) for models 7.5 hp (5.5 kW) and higher!

DURAPULSE GS3 AC Drives Specifications — Terminals

Main Circuit Terminals	
Terminal	Description
L1, L2, L3	Input Power
T1, T2, T3	AC Drive Output
B1, B2	Braking Resistor Connection (Under 20HP)
+2, – (negative)	External Dynamic Brake Unit (20HP & Over)
⏚	Ground

GS3-4030 shown

Control Circuit Terminals		
Terminal Symbol	***Description***	***Remarks***
+24V	DC Voltage Source	(+24V, 20mA), used only for AC drive digital inputs wired for source mode operation
DI1	Digital Input 1	Input Voltage: Internally Supplied (see Warning below) Sink Mode: Low active, V_{inL} Min = 0V, V_{inL} Max = 15V, Iin Min = 2.1mA, I_{in} Max = 7.0mA Source Mode: High active, V_{inH} Min = 8.5V, V_{inH} Max = 24V, I_{in} Min = 2.1mA, I_{in} Max = 7.0mA Input response: 12–15 msec Also see "Basic Wiring Diagram" on the next pages.
DI2	Digital Input 2	
DI3	Digital Input 3	
DI4	Digital Input 4	
DI5	Digital Input 5	
DI6	Digital Input 6	
DI7	Digital Input 7	
DI8	Digital Input 8	
DI9	Digital Input 9	
DI10	Digital Input 10	
DI11	Digital Input 11	
DCM	Digital Common	
+10V	Internal Power Supply	+10VDC (10mA maximum load)
AI1	Analog Input	0 to +10 V input only
AI2	Analog Input	0 to 20mA / 4 to 20mA input
AI3	Analog Input	-10 to +10 V input only
ACM	Analog Common	
R1O	Relay Output 1 Normally Open	Resistor Load: 240VAC - 5A (N.O) / 3A (N.C.) 24VDC - 5A (N.O.) / 3A (N.C.) Inductive Load: 240VAC - 1.5A (N.O) / 0.5A (N.C) 24VDC - 1.5A (N.O) / 0.5A (N.C) See P 3.01 to P 3.03
R1C	Relay Output 1 Normally Closed	
R1	Relay Output 1 Common	
DO1	Photocoupled digital output	Maximum 48VDC, 50mA
DO2	Photocoupled digital output	
DO3	Photocoupled digital output	
DOC	Digital Output Common	
AO	Analog Output	0 to +10 V 2mA Output
FO	Digital Frequency Output	Square wave pulse train output

WARNING: Do NOT connect external voltage sources to the digital inputs. Permanent damage may result.

NOTE: USE TWISTED-SHIELDED, TWISTED-PAIR OR SHIELDED-LEAD WIRES FOR THE CONTROL SIGNAL WIRING. IT IS RECOMMENDED TO RUN ALL SIGNAL WIRING IN A SEPARATE STEEL CONDUIT. THE SHIELD WIRE SHOULD ONLY BE CONNECTED AT THE AC DRIVE. DO NOT CONNECT SHIELD WIRE ON BOTH ENDS.

DURAPULSE GS3 AC Drives – Basic Wiring Diagram

Power Wiring Diagram – drives under 20 hp

Note: Users MUST connect wiring according to the circuit diagram shown below. (Refer to user manual GS3-M for additional specific wiring information.)

Note: Please refer to the following pages for explanations and information regarding feedback cards (pg.69), line reactors (pg.71), braking components (pg.1), EMI filters (pg.102), RF filters (pg.111), and fuses (pg.112).

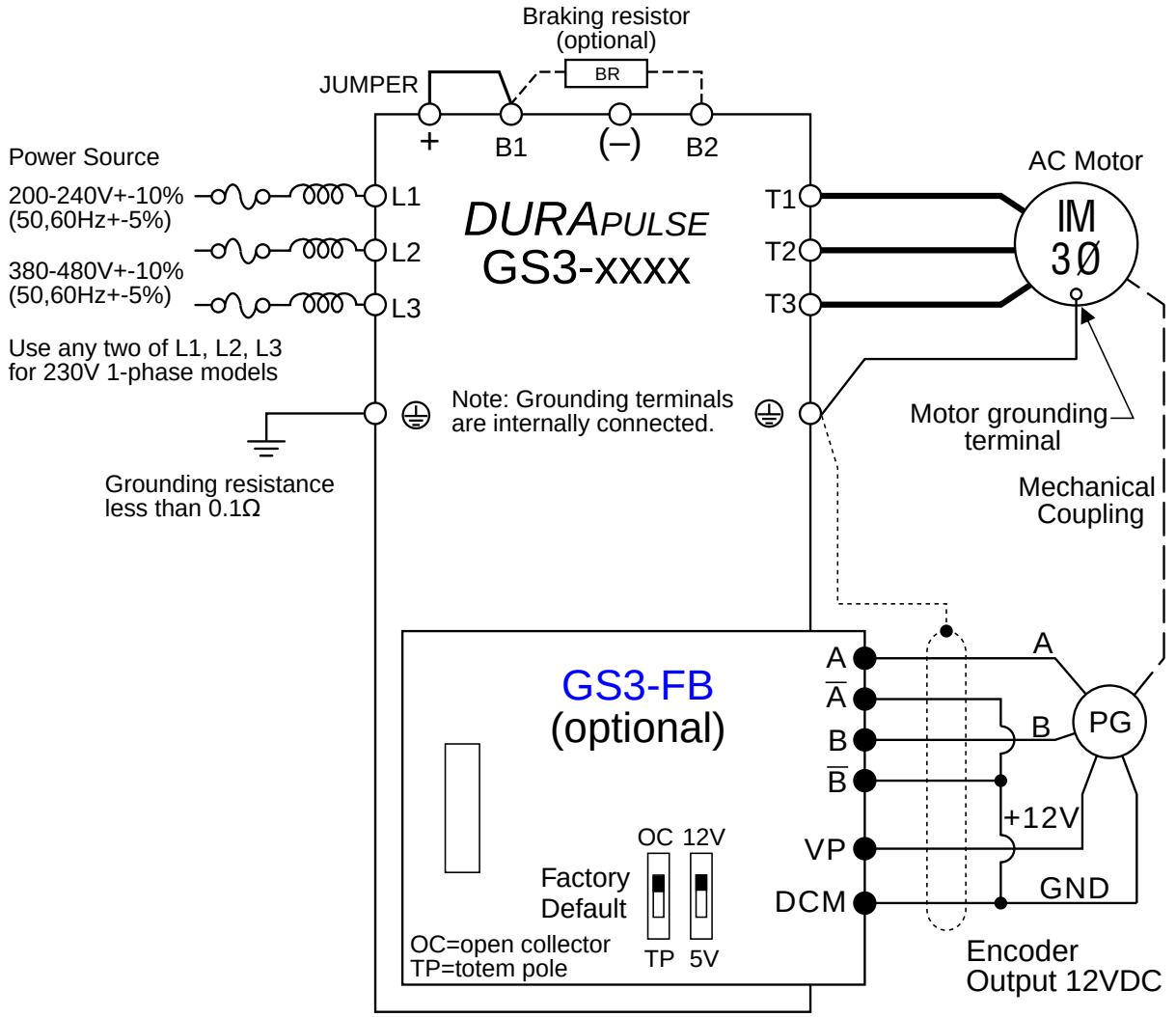

○ Main circuit (power) terminals ● Control circuit terminal ⫶ Shielded leads

WARNING: Do not plug a modem or telephone into the GS3/*DURAPULSE* RJ-12 Serial Comm Port, or permanent damage may result. Terminals 2 and 5 should not be used as a power source for your communication connection.

DURAPULSE GS3 AC Drives – Dimensions

GS3-21P0, GS3-22P0, GS3-41P0, GS3-42P0

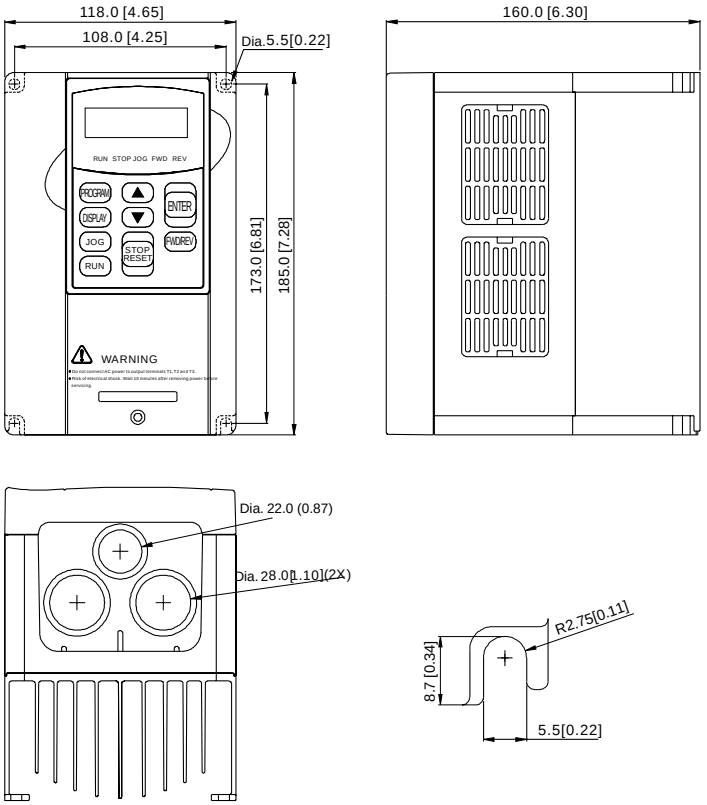

GS3-43P0

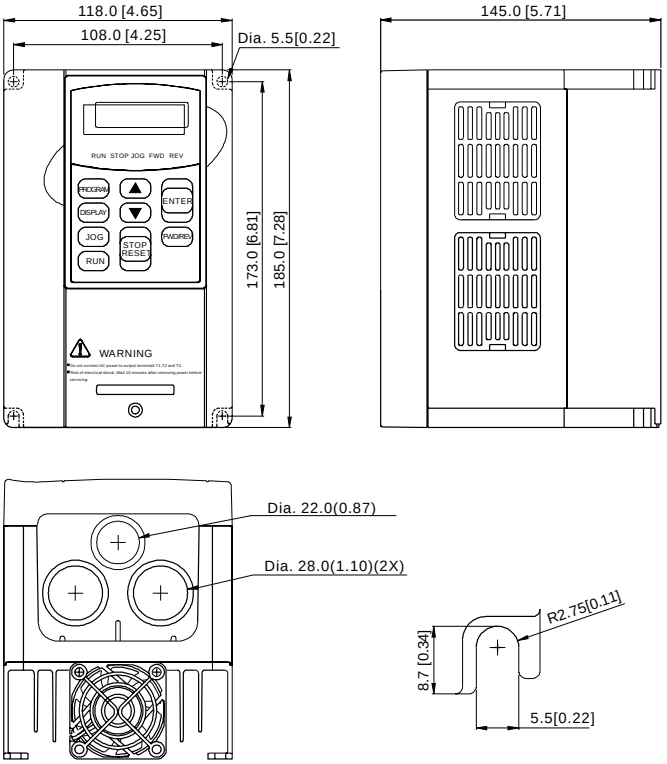

unit: mm(in)

DURAPULSE GS3 AC Drives – Introduction

DURAPULSE GS3 AC Drives																
Motor Rating	HP	1	2	3	5	7.5	10	15	20	25	30	40	50	60	75	100
	kW	0.75	1.5	2.2	3.7	5.5	7.5	11	15	18.5	22	30	37	45	55	75
230V Single-Phase Input / 230V Three-Phase Output		✔	✔	✔												
230V Three-Phase Input / Output		✔	✔	✔	✔	✔	✔	✔	✔	✔	✔	✔	✔			
460V Three-Phase Input / Output		✔	✔	✔	✔	✔	✔	✔	✔	✔	✔	✔	✔	✔	✔	✔

Overview

The *DURAPULSE* series of AC drives offers all of the features of our GS2 series of drives including dynamic braking, PID, removable keypad and RS-485 Modbus communication. The *DURAPULSE* AC drive also offers sensorless vector control with the option of encoder feedback for enhanced speed control. The standard **smart** keypad (or Human Interface Module) is designed with defaults for the North American customer and allows you to configure the drive, set the speed, start and stop the drive, and monitor critical parameters for your application. In addition, this keypad has internal memory that allows **four** complete programs to be stored and transferred to any *DURAPULSE* drive. The *DURAPULSE* series offers three analog inputs, eleven digital inputs, and one SPDT relay output.

Features

- Simple Volts/Hertz control
- Sensorless vector control with autotune
- Sensorless vector control with optional encoder feedback card, for better speed control
- Sinusoidal pulse width modulation (PWM)
- Variable carrier frequency, depending on model
- IGBT technology
- Starting torque: 125% @ 0.5 Hz/150% @ 1Hz
- 150% rated current for one minute
- Electronic overload protection
- Stall prevention
- Adjustable accel and decel ramps with linear and S-curve settings
- Automatic torque and slip compensation
- Internal dynamic braking circuit for models under 20 hp; optional baking units available for models 20 hp and above
- DC braking
- Five skip frequencies
- Trip history
- Programmable jog speed
- Integral PID control
- Removable **smart** keypad with parameter upload/download
- Keypad with memory to store up to four programs of any *DURAPULSE* drive
- Eleven programmable digital inputs
- Three programmable analog inputs
- Three digital and one SPDT relay programmable outputs
- One programmable analog output
- One digital frequency output
- RS-485 Modbus communications
- Ethernet communication optional
- Two-year warranty
- UL/cUL/CE listed

Accessories

- AC line reactors
- EMI filters
- RF filter
- Braking resistors
- Braking units (for models 20 hp and above)
- Fuse kits and replacement fuses
- Replacement cooling fans
- Remote panel adapter
- Replacement keypad
- Keypad cables in 1, 3, and 5-meter lengths
- Ethernet interface
- Four and eight-port RS-485 multi-drop termination boards
- KEP***Direct*** I/O or OPC Server
- GSoft drive configuration software
- GS3-FB – feedback card
- GS-485HD15-CBL – ***ZIP***Link RS485 communication cable for connection to the DL06 and D2-260 15-pin ports
- USB-485M – USB to RS-485 PC adapter (see "Communications Products" chapter for detailed information)

Detailed descriptions and specifications for GS accessories are available in the "GS/ DURAPULSE Accessories" section.

Typical Applications

- Conveyors
- Fans
- Pumps
- Compressors
- HVAC
- Material handling
- Mixing
- Shop tools
- Extruding
- Grinding

DURAPULSE GS3 AC Drives Specifications

230V Class													
Model Name: GS3-xxx			21P0	22P0	23P0	25P0	27P5	2010	2015	2020	2025	2030	2040	2050
Price			$250.00	$303.00	$360.00	$414.00	$569.00	$722.00	$920.00	$1,143.00	$1,343.00	$1,538.00	$2,253.00	$2,817.00
Output Rating	**Max Motor Output**	**HP**	1.0	2.0	3.0	5.0	7.5	10	15	20	25	30	40	50
		kW	0.75	1.5	2.2	3.7	5.5	7.5	11	15	18.5	22	30	37
	Rated Output Current (A)		5	7	11	17	25	33	49	65	75	90	120	145
	Max Output Voltage		Three-phase 200 to 240V (proportional to input voltage)											
	Rated Frequency		0.1 to 400 Hz											
*** Input Rating**	**Rated Voltage/Frequency**		Single/Three-phase			Three-phase								
			200/208/220/230/240 VAC, 50/60Hz											
	Rated Input Current (A)		11.9 / 5.7	15.3 / 7.6	22 / 15.5	20.6	26	34	50	60	75	90	110	142
Voltage/Frequency Tolerance			Voltage: ± 10% Frequency: ± 5%											
Watt Loss @ 100% I (W)			60	82	130	194	301	380	660	750	920	1300	1340	1430
Weight (lb [kg])			4.5 [2.034]	4.5 [2.034]	9.4 [4.24]	9.4 [4.24]	13.3 [6.031]	13.3 [6.031]	14.3 [6.487]	26.5 [12]	26.5 [12]	26.5 [12]	77.2 [35]	77.2 [35]

** All 3-phase power sources must be symmetrical.*
Do not connect any DURAPULSE drives to grounded, center-tapped delta transformers (which are typically used for lighting circuits).

460V Class – Three-Phase																
Model Name: GS3-xxx			41P0	42P0	43P0	45P0	47P5	4010	4015	4020	4025	4030	4040	4050	4060	4075	4100
Price			$334.00	$373.00	$399.00	$442.00	$634.00	$760.00	$991.00	$1,206.00	$1,432.00	$1,625.00	$2,072.00	$2,522.00	$2,887.00	$3,240.00	$3,621.00
Output Rating	**Maximum Motor Output**	**HP**	1	2	3	5	7.5	10	15	20	25	30	40	50	60	75	100
		kW	0.75	1.5	2.2	3.7	5.5	7.5	11	15	18.5	22	30	37	45	55	75
	Rated Output Current (A)		2.7	4.2	5.5	8.5	13	18	24	32	38	45	60	73	91	110	150
	Maximum Output Voltage		Three-phase 380 to 480V (proportional to input voltage)														
	Rated Frequency		0.1 to 400 Hz														
***Input Rating**	**Rated Voltage/ Frequency**		Three-phase, 380/400/415/440/460/480VAC, 50/60Hz														
	Rated Input Current (A)		3.2	4.3	5.9	11.2	14	19	25	32	39	49	60	63	90	130	160
Voltage/Frequency Tolerance			Voltage: ± 10% Frequency: ± 5%														
Watt Loss @ 100% I (W)			70	102	132	176	250	345	445	620	788	1290	1420	1680	2020	2910	3840
Weight (lb [kg])			3.9 [1.759]	4.4 [1.994]	4.1 [1.857]	9.4 [4.24]	13.2 [6.002]	13.5 [6.106]	14.4 [6.525]	26.5 [12]	26.5 [12]	26.5 [12]	77.2 [35]	77.2 [35]	77.2 [35]	116.8 [53]	116.8 [53]

** All 3-phase power sources must be symmetrical.*
Do not connect any DURAPULSE drives to grounded, center-tapped delta transformers (which are typically used for lighting circuits).

DURAPULSE GS3 AC Drives General Specifications

General Specifications			
Control Characteristics			
Control System			Pulse Width Modulation, Carrier frequency adjustable from 1–15 kHz depending on the model. This system determines the control methods of the AC drive. 00: V/Hz open loop control 01: V/Hz closed loop control 02: Sensorless Vector 03: Sensorless Vector with external feedback
Rated Output Frequency			0.1 to 400.0 Hz
Output Frequency Resolution			0.1 Hz
Overload Capacity			150% of rated current for 1 minute
Torque Characteristics			Includes auto-torque boost, auto-slip compensation, starting torque 125% @ 0.5 Hz / 150% @ 1.0 Hz
Braking Torque			20% without braking resistor, 125% with optional braking resistor (braking circuit built-in only for units under 20 hp)
DC Braking			Operation frequency 60–0 Hz, 0–100% rated current, Start time 0.0–5.0 seconds, Stop time 0.0–25.0 seconds
Acceleration/Deceleration Time			0.1 to 600 seconds (linear or non-linear acceleration/deceleration), second acceleration/deceleration available
Voltage/Frequency Pattern			Settings available for Constant Torque - low & high starting torque, Variable Torque - low & high starting torque, and user configured
Stall Prevention Level			20 to 200% of rated current
Operation Specifications			
Inputs	Frequency Setting	Keypad	Setting by <UP> or <DOWN> buttons
		External Signal	Potentiometer - 3 to 5 kΩ, 0 to 10 VDC (input impedance 10 kΩ), -10 to +10 VDC, 4 to 20 mA (input impedance 250Ω), 0 to 20 mA; Multi-Speed Inputs 1 to 4, RS-232C/RS-485 communication interface
	Operation Setting	Keypad	Setting by <RUN>, <STOP>, <JOG> , <FWD>, <REV> buttons
		External Signal	Forward/Stop, Reverse/Stop (run/stop, fwd/rev), 3-wire control, Serial Communication RS-232C & RS-485 (Modbus RTU)
	Input Terminals	Digital Sink/Source Selectable	11 user-programmable: FWD/STOP, REV/STOP, RUN/STOP, REV/FWD, RUN momentary (N.O.), STOP momentary (N.C.), External Fault (N.O./N.C.), External Reset, Multi-Speed Bit (1-4), Manual Keyboard Control, Jog, External Base Block (N.O./N.C.), Second Accel/Decel Time, Speed Hold, Increase Speed, Decrease Speed, Reset Speed to Zero, PID Disable (N.O.), PID Disable (N.C.), Input Disable
		Analog	3 user-configurable, 0 to 10V (input impedance 10 kΩ), 0 to 20 mA, 4 to 20 mA (input impedance 250Ω), 10 bit resolution -10V to +10V, 10 bit resolution
Outputs	Output Terminals	Digital 3 transistors 1 relay	4 user-programmable: Inverter Running, Inverter Fault, At Speed, Zero Speed, Above Desired Frequency, Below Desired Frequency, At Maximum Speed, Over Torque Detected, Above Desired Current, Below Desired Current, PID Deviation Alarm, Heatsink Overheat Warning (OH), Soft Braking Signal, Above desired Frequency 2, Below desired Frequency 2, Encoder Loss
		Digital Square Wave	One digital square wave output representing drive frequency
		Analog	1 user-programmable, 0 to 10V, 8 bit resolution frequency, current, process variable PV
Operating Functions			Automatic voltage regulation, voltage/frequency characteristics selection, non-linear acceleration/deceleration, upper and lower frequency limiters, 15-stage speed operation, adjustable carrier frequency (1 to 15 kHz), PID control, 5 skip frequencies, analog gain & bias adjustment, jog, electronic thermal relay, automatic torque boost, trip history, software protection
Protective Functions			Electronic Thermal, Overload Relay, Auto Restart after Fault, Momentary Power Loss, Reverse Operation Inhibit, Auto Voltage Regulation, Over-Voltage Stall Prevention, Auto Adjustable Accel/Decel, Over-Torque Detection Mode, Over-Torque Detection Level, Over-Torque Detection Time, Over-Current Stall Prevention during Acceleration, Over-Current Stall Prevention during Operation
Operator Interface	Operator Devices		9-key, 2 line x 16 character LCD display, 5 status LEDs
	Programming		Parameter values for setup and review, fault codes
	Status Display		Output Frequency, Motor Speed, Scaled Frequency, Output Current, Motor Load, Output Voltage, DC Bus Voltage, PID Setpoint, PID Feedback, Frequency Setpoint
	Key Functions		RUN, STOP/RESET, FWD/REV, PROGRAM, DISPLAY, <UP>, <DOWN>, ENTER
Environment	Enclosure Rating		Protected Chassis, IP20
	Ambient Temperature		-10°C to 40°C (14°F to 104°F)
	Storage Temperature		-20°C to 60°C (-4°F to 140°F) – during short term transportation period
	Ambient Humidity		20 to 90% RH (non-condensing)
	Vibration		9.8 m/s^2 (1G) less than 10 Hz; 5.9 m/s^2 (0.6G) 10 to 60 Hz
	Installation Location		Altitude 1000m or lower above sea level, keep from corrosive gas, liquid and dust
Options			Noise filter, input AC reactor, output AC reactor, cable for remote operator, programming software, dynamic braking resistor, dynamic braking unit; RF filter; remote panel adapter; Ethernet interface; four and eight port RS-485 multi-drop termination boards, replacement keypads, fuse kits and replacement fuses

DURAPULSE GS3 AC Drives Specifications – Installation

Understanding the installation requirements for your DURAPULSE AC drive will help to ensure that it operates within its environmental and electrical limits.

Note: Never use only this catalog for installation instructions or operation of equipment; refer to the user manual, GS3-M.

Environmental Specifications	
Protective Structure [1]	IP20
Ambient Operating Temperature [2]	-10 to 40°C (14°F to 104°F)
Storage Temperature [3]	-20 to 60°C (-4°F to 140°F)
Humidity	To 90% (no condensation)
Vibration [4]	9.8 m/s² (1g), less than 10 Hz 5.9 m/s² (0.6g),10 to 60 Hz
Location	Altitude 1,000 m or less, indoors (no corrosive gases, liquids or dust)

1: Protective structure is based upon EN60529

2: The ambient temperature must be in the range of -10° to 40°C. If the range will be up to 50°C, you will need to set the carrier frequency to 2.1 kHz or less and derate the output current to 80% or less.

3: The storage temperature refers to the short-term temperature during transport.

4: Conforms to the test method specified in JIS CO911 (1984)

Watt-loss Chart	
GS3 Drive Model	***At full load***
GS3-21P0	60
GS3-22P0	82
GS3-23P0	130
GS3-25P0	194
GS3-27P5	301
GS3-2010	380
GS3-2015	660
GS3-2020	750
GS3-2025	920
GS3-2030	1300
GS3-2040	1340
GS3-2050	1430
GS3-41P0	70
GS3-42P0	102
GS3-43P0	132
GS3-45P0	176
GS3-47P5	250
GS3-4010	345
GS3-4015	445
GS3-4020	620
GS3-4025	788
GS3-4030	1290
GS3-4040	1420
GS3-4050	1680
GS3-4060	2020
GS3-4075	2910
GS3-4100	3840

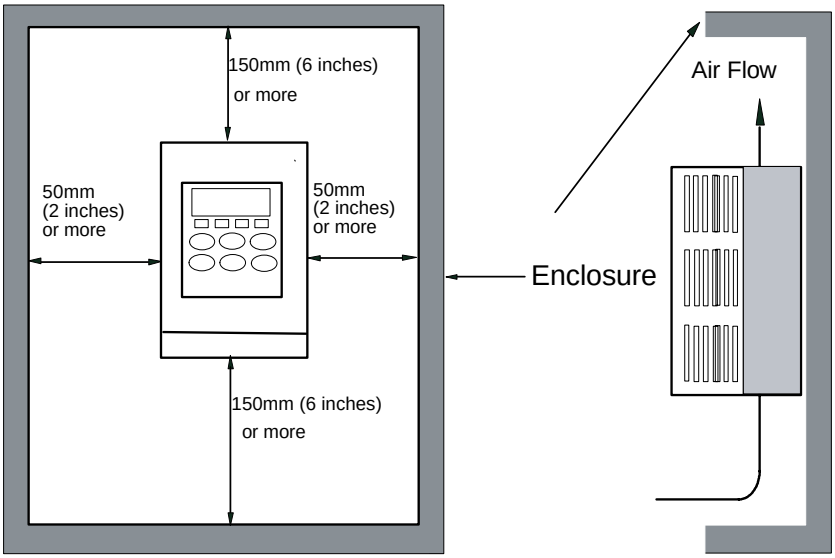

Minimum Clearances and Air Flow

Warning: AC drives generate a large amount of heat which may damage the AC drive. Auxiliary cooling methods are typically required in order not to exceed maximum ambient temperatures.

Warning: Maximum ambient temperatures must not exceed 50°C (122°F), or 40°C (104°F) for models 7.5 hp (5.5 kW) and higher!

DURAPULSE GS3 AC Drives Specifications — Terminals

Main Circuit Terminals	
Terminal	Description
L1, L2, L3	Input Power
T1, T2, T3	AC Drive Output
B1, B2	Braking Resistor Connection (Under 20HP)
+2, – (negative)	External Dynamic Brake Unit (20HP & Over)
⏚	Ground

GS3-4030 shown

Control Circuit Terminals		
Terminal Symbol	***Description***	***Remarks***
+24V	DC Voltage Source	(+24V, 20mA), used only for AC drive digital inputs wired for source mode operation
DI1	Digital Input 1	Input Voltage: Internally Supplied (see Warning below) Sink Mode: Low active, V_{inL} Min = 0V, V_{inL} Max = 15V, Iin Min = 2.1mA, I_{in} Max = 7.0mA Source Mode: High active, V_{inH} Min = 8.5V, V_{inH} Max = 24V, I_{in} Min = 2.1mA, I_{in} Max = 7.0mA Input response: 12–15 msec Also see "Basic Wiring Diagram" on the next pages.
DI2	Digital Input 2	
DI3	Digital Input 3	
DI4	Digital Input 4	
DI5	Digital Input 5	
DI6	Digital Input 6	
DI7	Digital Input 7	
DI8	Digital Input 8	
DI9	Digital Input 9	
DI10	Digital Input 10	
DI11	Digital Input 11	
DCM	Digital Common	
+10V	Internal Power Supply	+10VDC (10mA maximum load)
AI1	Analog Input	0 to +10 V input only
AI2	Analog Input	0 to 20mA / 4 to 20mA input
AI3	Analog Input	-10 to +10 V input only
ACM	Analog Common	
R1O	Relay Output 1 Normally Open	Resistor Load: 240VAC - 5A (N.O) / 3A (N.C.) 24VDC - 5A (N.O.) / 3A (N.C.) Inductive Load: 240VAC - 1.5A (N.O) / 0.5A (N.C) 24VDC - 1.5A (N.O) / 0.5A (N.C) See P 3.01 to P 3.03
R1C	Relay Output 1 Normally Closed	
R1	Relay Output 1 Common	
DO1	Photocoupled digital output	Maximum 48VDC, 50mA
DO2	Photocoupled digital output	
DO3	Photocoupled digital output	
DOC	Digital Output Common	
AO	Analog Output	0 to +10 V 2mA Output
FO	Digital Frequency Output	Square wave pulse train output

WARNING: Do NOT connect external voltage sources to the digital inputs. Permanent damage may result.

NOTE: USE TWISTED-SHIELDED, TWISTED-PAIR OR SHIELDED-LEAD WIRES FOR THE CONTROL SIGNAL WIRING. IT IS RECOMMENDED TO RUN ALL SIGNAL WIRING IN A SEPARATE STEEL CONDUIT. THE SHIELD WIRE SHOULD ONLY BE CONNECTED AT THE AC DRIVE. DO NOT CONNECT SHIELD WIRE ON BOTH ENDS.

DURAPULSE GS3 AC Drives – Basic Wiring Diagram

Power Wiring Diagram – drives under 20 hp

Note: Users MUST connect wiring according to the circuit diagram shown below. (Refer to user manual GS3-M for additional specific wiring information.)

Note: Please refer to the following pages for explanations and information regarding feedback cards (pg.69), line reactors (pg.71), braking components (pg.1), EMI filters (pg.102), RF filters (pg.111), and fuses (pg.112).

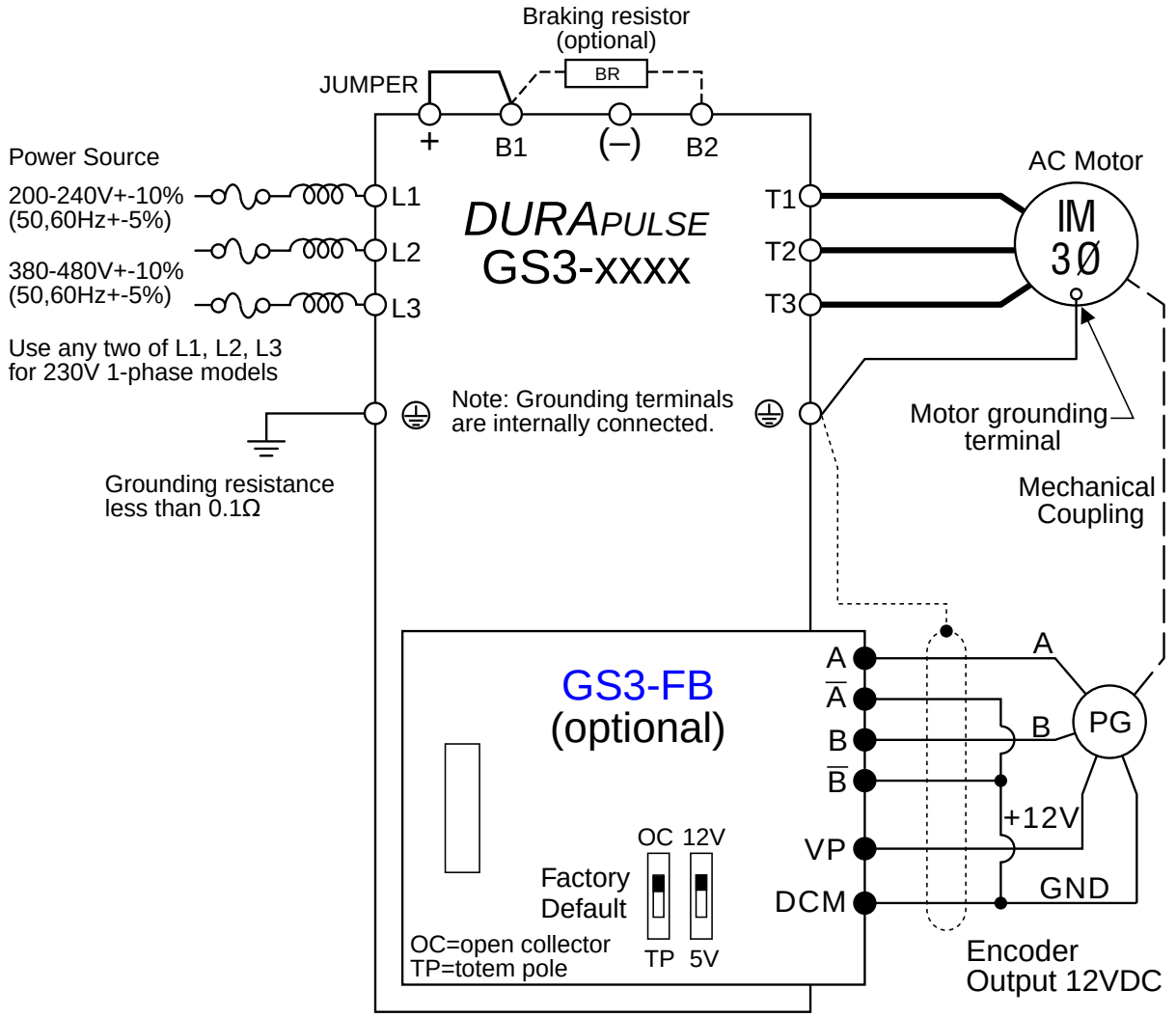

○ Main circuit (power) terminals ● Control circuit terminal ⫶ Shielded leads

WARNING: Do not plug a modem or telephone into the GS3/*DURAPULSE* RJ-12 Serial Comm Port, or permanent damage may result. Terminals 2 and 5 should not be used as a power source for your communication connection.

DURAPULSE GS3 AC Drives – Dimensions

GS3-23P0, GS3-25P0, GS3-45P0

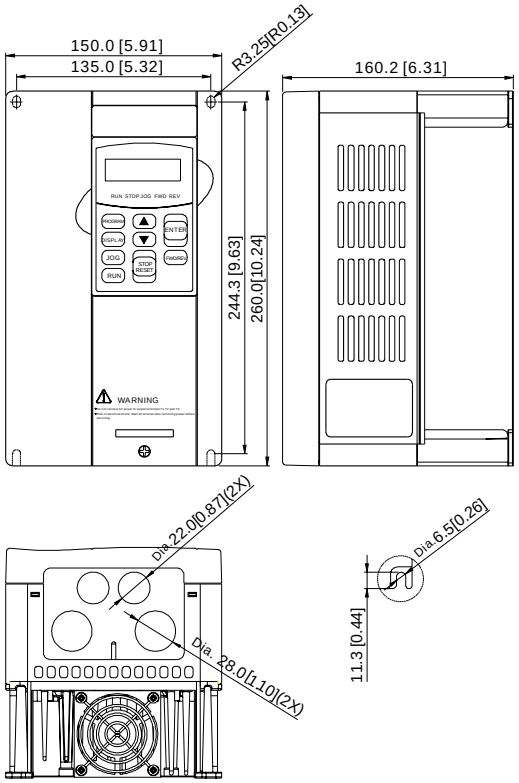

GS3-27P5, GS3-2010, GS3-2015, GS3-47P5, GS3-4010, GS3-4015

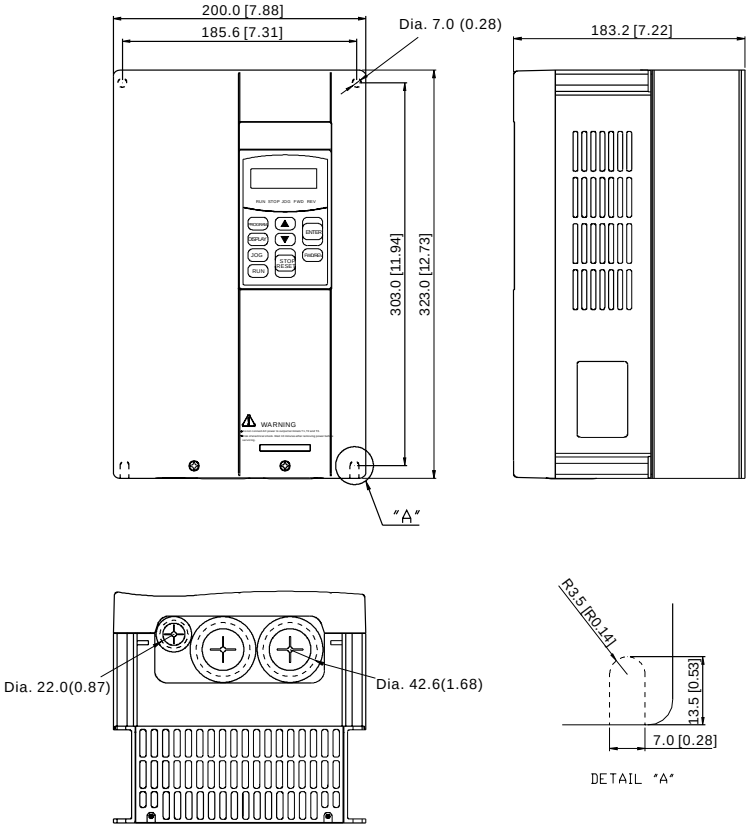

unit: mm(in)

GS1,GS2,GS3/*DURA*PULSE Accessories – Ethernet Interface

NOTE: GS1, GS2, GS3 AC DRIVES ONLY

GS-EDRV100 works with GS1, GS2, & GS3 *DURA*PULSE drives.

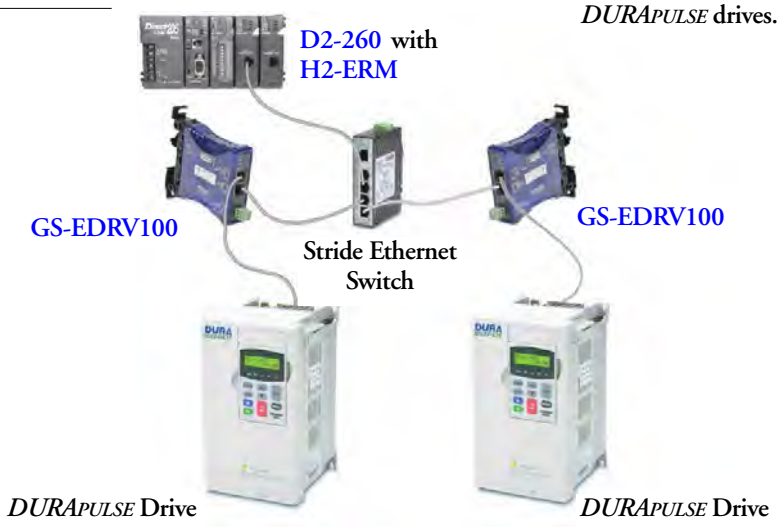

GS-EDRV100 Overview

The GS-EDRV100 Ethernet interface provides a high-performance Ethernet link between a control system and any GS or *DURA*PULSE AC drive. The GS-EDRV100 processes signals to and from the drive, mounts on 35mm DIN rail, and connects the drive to an Ethernet hub or PC. It formats drive signals to conform with the Ethernet standard and transmits these signals to the H2-ERM or H4-ERM, Productivity3000, KEP*Direct* OPC Server, KEP*Direct* EBC I/O Server, or independent controller with a Modbus TCP/IP driver. This allows for greater connectivity to many control system architectures.

An additional feature is the built-in Web server which allows users to configure and control the drive from any Web browser via the IP address of the GS-EDRV100 card.

Note: The GS-EDRV100 requires an external 24 VDC power supply.

Automatic power shut-down

The GS series drives have a provision for shutting down control or power to the inverter in the event of a communications time-out. This function can be set up through the drive's parameter group 9.

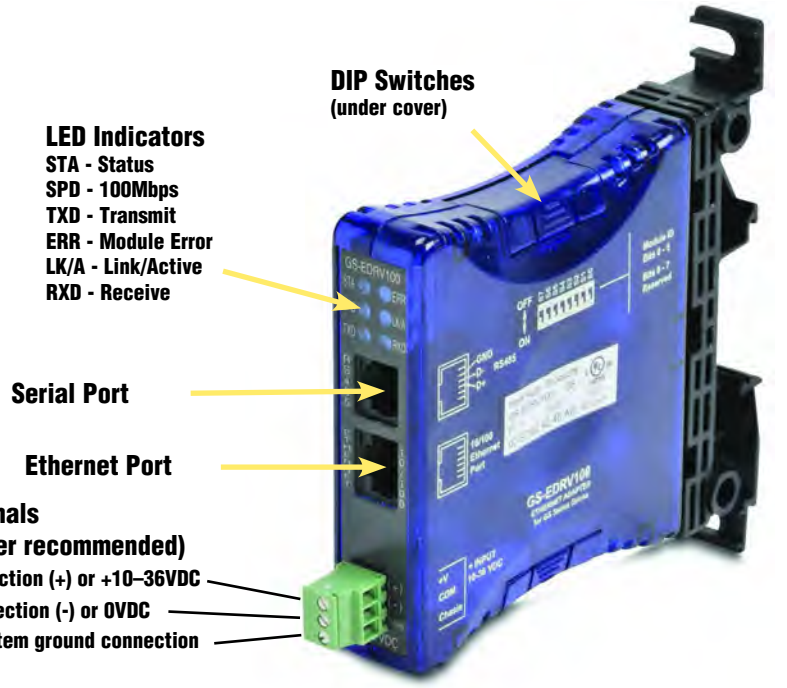

Dimensions: inches[mm]

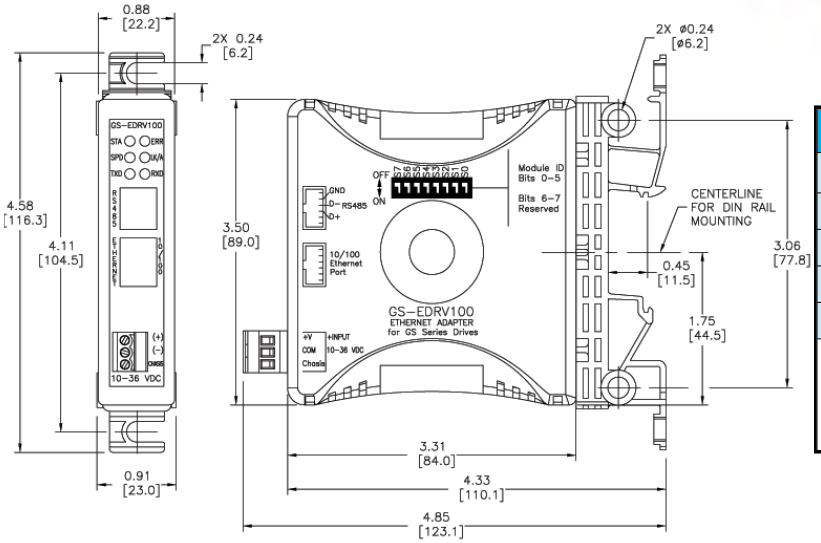

GS-EDRV100 Specifications	
Part Number	***GS-EDRV100***
Price	$202.00
Approvals	cUL Listed, file number E185989
Input Voltage	10–36 VDC
Input Current	50–220 mA

NOTE: Can be used with GS1, GS2, & GS3/DURApulse series AC drives.

NOTE: Package includes 2-ft. serial communications cable.

NOTE: Mounts on 35mm DIN rail.

Switching Power Supplies

PS5R-V Series

PRODUCT DESCRIPTION

DIN-rail mount switching power supplies with global approvals for both industrial and hazardous locations

KEY FEATURES

- Compact size preserves panel space
- Slim size (width):
  22.5mm (10W/15W/30W)
  36mm (60W/90W)
  45mm (7.5W)
  46mm (120W)
  60mm (240W)
- Universal Voltage Input:
  85-264V AC/100-370V DC
- Wide operating temperature range
- Spring-up terminals accept ring & fork terminals
- Approved for use in Class I Division 2 hazardous locations
- Can be installed in 6 directions
- 7.5W ~ 90W meet NEC Class 2 output ratings
- Overcurrent protection with auto-reset
- Meets SEMI F47 Sag Immunity (208V AC input)
- RoHS compliant
- Five-year factory warranty

STANDARDS COMPLIANCE

Applicable Standards	Mark	File No. or Organization
UL508 UL1310[1] ANSI/ISA 12.12.01 CSA C22.2 No.107.1 CSA C22.2 No.213 CSA C22.2 No.223[1]	c UL us LISTED	UL/c-UL Listed File No. E467154, E177168
EN60950-1 EN50178 EN61204-3 EN50581	TÜV	TÜV SÜD[2]
	CE	EU Low Voltage Directive EMC Directive RoHS Directive
SEMI F47	—	EPRI

Note 1: PS5R-VA/VB/VC/VD/VE only
Note 2: EN60950-1, EN50178 only

POWER SUPPLY PART NUMBERS

Output Capacity	Part Number	Input Voltage	Output Voltage	Output Current
7.5W	PS5R-VA05	100 to 240V AC (Voltage range: 85 to 264V AC / 100 to 370V DC)	5V	1.5A
	PS5R-VA12		12V	0.6A
	PS5R-VA24		24V	0.3A
10W	PS5R-VB05		5V	2.0A
15W	PS5R-VB12		12V	1.3A
	PS5R-VB24		24V	0.65A
30W	PS5R-VC12		12V	2.5A
	PS5R-VC24		24V	1.3A
60W	PS5R-VD24		24V	2.5A
90W	PS5R-VE24		24V	3.75A
120W	PS5R-VF24		24V	5.0A
240W	PS5R-VG24		24V	10.0A

Part Number Structure

PS5R - V □ □

Output Voltage
05: 5V[3]
12: 12V[4]
24: 24V

Output Capacity
A: 7.5W
B: 10W/15W
C: 30W
D: 60W
E: 90W
F: 120W
G: 240W

Note 3: PS5R-VA/VB only
Note 4: PS5R-VA/VB/VC only
Use only for interpreting part numbers.
Do not use for developing part numbers.

SPECIFICATIONS

Model		5V DC output	PS5R-VA05	PS5R-VB05	-	-	-	-	-
		12V DC output	PS5R-VA12	PS5R-VB12	PS5R-VC12	-	-	-	-
		24V DC output	PS5R-VA24	PS5R-VB24	PS5R-VC24	PS5R-VD24	PS5R-VE24	PS5R-VF24	PS5R-VG24
Output Capacity			7.5W	15W (5V Model is 10W)	30W	60W	90W	120W	240W
Input	Rated Input Voltage (Single-phase two-wire)[1]		100 to 240V AC (Voltage range: 85 to 264V AC/100 to 370V DC) (Load ≤ 80% at 100-105V DC)						
	Frequency		50/60 Hz						
	Input Current (Typ.)	100V AC	5V: 0.20A 12V, 24V: 0.18A	5V: 0.25A 12V, 24V: 0.35A	0.7A	1.3A	1.1A	1.4A	2.7A
		230V AC	5V: 0.12A 12V, 24V: 0.10A	5V: 0.14A 12V, 24V: 0.19A	0.3A	0.8A	0.6A	0.7A	1.2A
	Inrush Current (Typ.) (Ta=25°C, cold start)	100V AC	15A	18A					14A
		230V AC	36A	45A				41A	30A
	Leakage Current	120V AC	0.5mA max.						
		230V AC	1.0mA max.						
	Efficiency (Typ.) (at rated output)[2]	100V AC	5V: 74%, 12V: 79%, 24V: 80%	5V: 77%, 12V: 82%, 24V: 84%	12V: 83%, 24V: 85%	86%	88%		89%
		230V AC	5V: 73%, 12V: 77%, 24V: 76%	5V: 73%, 12V: 80%, 24V: 81%	12V: 85%, 24V: 87%	86%	89%		90%
	Power Factor (Typ.)	100V AC	—	—	—	—	0.99		
		230V AC	—	—	—	—	0.86	0.92	0.96
Output	Rated Voltage/Current		5V/1/5A, 12V/0.6A, 24V/0.3A	5V/2.0A[3], 12V/1.3A, 24V/0.65A	12V/2.5A, 24V/1.3A	24V/2.5A	24V/3.75A	24V/5A	24V/10A
	Adjustable Voltage Range		±10%				±5%	±10%	
	Output Holding Time (Typ.) (at rated output)	100V AC	5V: 45ms, 12V: 45ms, 24V: 47ms	5V: 53ms, 12V: 34ms, 24V: 36ms	12V: 13ms, 24V: 15ms	13ms	20ms	30ms	
		230V AC	5V: 289ms 12V: 294ms 24V: 282ms	5V: 330ms 12V: 215ms 24V: 230ms	12V: 110ms 24V: 110ms	105ms	30ms	33ms	40ms
	Start Time (at rated input and output)		450ms max.	500ms max.	600ms max.	800ms max.		700ms max.	800ms max.
	Rise Time (at rated input and output)		220ms max	5V, 12V: 200ms max. 24V: 250ms max.	200ms max.				
	Regulation	Input Fluctuation	0.4% max.						
		Load Fluctuation	5V: 2.5% max. 12V, 24V: 1.0% max.		1.0% max.				
		Temperature Change	0.04%/°C max. (-10 to +65°C)	0.05%/°C max. (-10 to +65°C)	12V: 0.05%/°C max. (-10 to +50°C) 24V: 0.05%/°C max. (-10 to +55°C)	0.05%/°C max. (-10 to +55°C)	0.05%/°C max. (-10 to +50°C)	0.05%/°C max. (-25 to +55°C)	0.05%/°C max. (-25 to +50°C)
		Ripple (including noise)	5V: 8% p-p max. (-25 to -10°C) 12V: 6% p-p max. (-25 to -10°C) 24V: 4% p-p max. (-25 to -10°C)	5V: 8% p-p max. (-25 to -10°C) 12V: 6% p-p max. (-25 to -10°C) 24V: 4% p-p max. (-25 to -10°C)	12V: 6% p-p max. (-25 to -10°C) 24V: 4% p-p max. (-25 to -10°C)	4% p-p max. (-25 to -10°C)			
			5V: 5% p-p max. (-10 to +0°C) 12V: 2.5% p-p max. (-10 to +0°C) 24V: 1.5% p-p max. (-10 to +0°C)	5V: 5% p-p max. (-10 to +0°C) 12V: 2.5% p-p max. (-10 to +0°C) 24V: 1.5% p-p max. (-10 to +0°C)	12V: 2.5% p-p max. (-10 to +0°C) 24V: 1.5% p-p max. (-10 to +0°C)	1.5% p-p max. (-10 to +0°C)			
			5V: 2.5% p-p max. (0 to +65°C) 12V: 1.5% p-p max. (0 to +65°C) 24V: 1% p-p max. (0 to +65°C)	5V: 2.5% p-p max. (0 to +65°C) 12V: 1.5% p-p max. (0 to +65°C) 24V: 1% p-p max. (0 to +65°C)	12V: 1.5% p-p max. (0 to +50°C) 24V: 1% p-p max. (0 to +55°C)	1% p-p max. (0 to +55°C)	1% p-p max. (0 to +50°C)	1% p-p max. (0 to +55°C)	1% p-p max. (0 to +50°C)
Overcurrent Protection			105% min. (auto reset)				101% min. (auto reset)	105% min. (auto reset)	
Operation Indicator			LED (green)						
Dielectric Strength	Between input and output terminals		3,000V AC, 1 minute						
	Between input and ground terminals		2,000V AC, 1 minute						
	Between output and ground terminals		500V AC, 1 minute						
Insulation Resistance			Between input and output terminals: 100MΩ min. (500V DC megger) Between input and ground terminals: 100MΩ min. (500V DC megger)						
Operating Temperature[4] (No freezing)			-25 to +75°C		-25 to +70°C		-25 to +65°C		
Operating Humidity			20 to 90% RH (no condensation)						
Storage Temperature (No freezing)			-25 to +75°C						
Storage Humidity			20 to 90% RH (no condensation)						
Vibration Resistance			10 to 55Hz, amplitude 0.375mm, 2 hours each in 3 axes (when used with BNL6 end clips)			10 to 55Hz, amplitude 0.33mm, 2 hours each in 3 axes (when used with BNL6 end clips) 10 to 55Hz, amplitude 0.375mm, 2 hours each in 3 axes (when used with BNL8 end clips)		10 to 55Hz, amplitude 0.21mm, 2 hours each in 3 axes (when used with BNL6 end clips) 10 to 55Hz, amplitude 0.375mm, 2 hours each in 3 axes (when used with BNL8 end clips)	10 to 55Hz, amplitude 0.375mm, 2 hours each in 3 axes (when used with part no. BNL6 mounting clips)
Shock Resistance			300 m/s^2 (30G), 3 times each in 6 directions						
Expected Life[5]			8 years minimum (at the rated input, 50% load, operating temperature +40°C, standard mounting direction)						
EMC	EMI		EN61204-3 (Class B)						
	EMS		EN61204-3 (industrial)						
Safety Standards			UL508 (Listing), UL1310 Class 2, ANSI/ISA-12.12.01 CSA C22.2 No. 107.1, 213, 223 EN60950-1, EN50178					UL508 (Listing) ANSI/ISA-12.12.01 CSA C22.2 No. 107.1, 213 EN60950-1, EN50178	
Other Standard			SEMI F47 (at 208V AC input only)						
Degree of Protection			IP20 (EN60529)						
Dimensions (mm)			75H × 45W × 70D	90H × 22.5W × 95D		95H × 36W × 108D		115H × 46W × 121D	125H × 60W × 125D
Weight (approx.)			130g	140g	150g	260g	310g	470g	960g
Terminal Screw			M3.5						

*At normal temperature and humidity unless otherwise specified. Notes: 1: DC input voltage is not subject to safety standards. When using on DC input, connect a fuse to the input terminal for DC input protection. 2: Under stable state. 3: PS5R-VB05 (5V DC/2.0A) is 10W (Up to 3.0A at Ta = 0 to 40°C. Not subject to safety standards above 2.0A.) 4: See the output derating curves on page 3. 5: Calculation of the expected life is based on the actual life of the aluminum electrolytic capacitor. The expected life depends on operating conditions.

CHARACTERISTICS

Operating Temperature vs. Output Current (Derating Curves)

Conditions: Natural air cooling (Operating temperature is the temperature around the switching power supply.)

PS5R-VA05, -VA12, -VA24

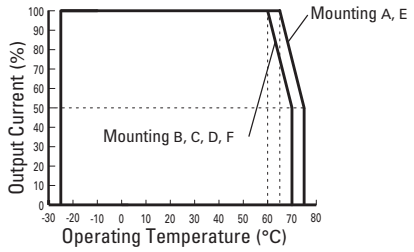

PS5R-VB05, -VB12, -VB24

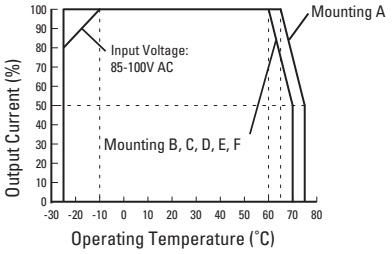

PS5R-VC12

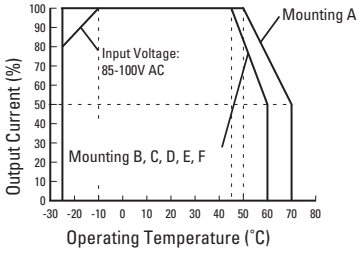

PS5R-VC24

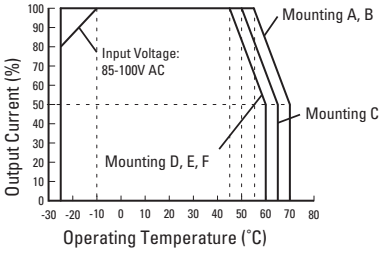

PS5R-VD24

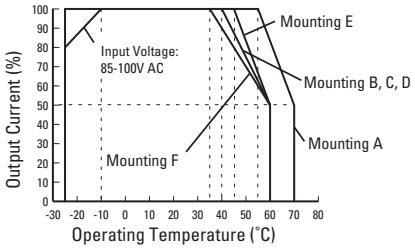

PS5R-VE24

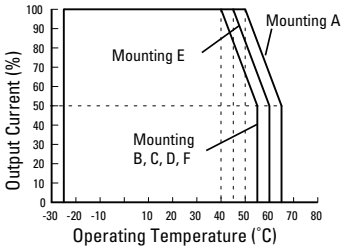

PS5R-VF24

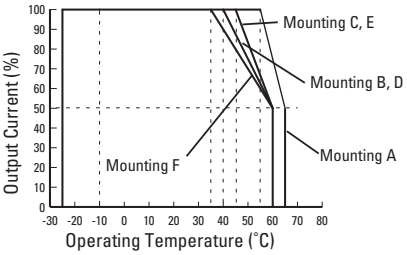

PS5R-VG24

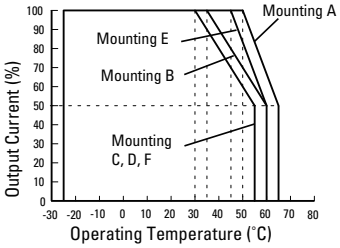

Input Voltage vs. Output Current (Derating Curves) (Ta=25ºC)

PS5R-VA05, VA12, VA24, -VB05, -VB12, -VB24, -VC12, -VC24, -VD24, -VE24, -VF24

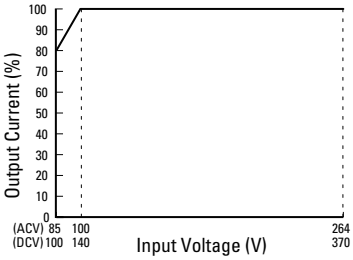

PS5R-VG24

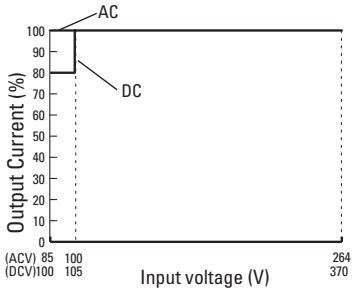

Overcurrent Protection Characteristics

PS5R-VA/VB/VC/VD/VF

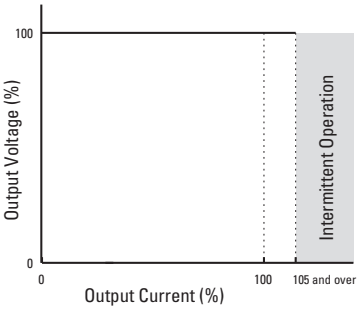

PS5R-VE24

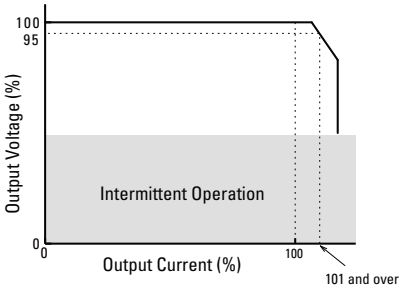

PS5R-VG24

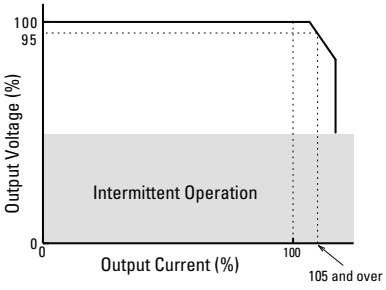

Operating Temperature Approved by Safety Standards

Part Number	UL508, CSA C22.2 No.107.1, ANSI/ISA12.12.01, EN60950-1, EN50178					
	Mounting A	Mounting B	Mounting C	Mounting D	Mounting E	Mounting F
PS5R-A05, -VB12, -VB24	65	60	60	60	65	60
PS5R-VB05, -VB12, -VB24	65	60	60	60	60	60
PS5R-VC12	50	45	45	45	45	45
PS5R-VC24	55	55	50	45	45	45
PS5R-VD24	55	40	40	40	45	35
PS5R-VE24	50	40	40	40	45	40
PS5R-VF24	55	40	45	40	45	35
PS5R-VG24	50	35	30	30	45	30

MOUNTING STYLE

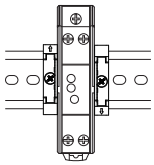
Mounting A
(Vertical, standard)

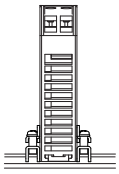
Mounting B
(Upright)

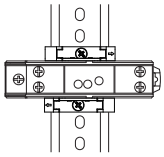
Mounting C
(Right side up)

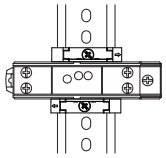
Mounting D
(Left side up)

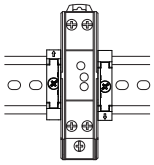
Mounting E
(Upside down)

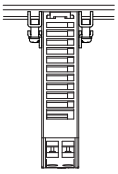
Mounting F
(Downward)

FRONT PANEL

PS5R-VA

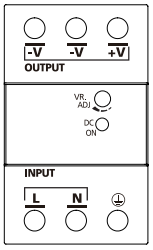

PS5R-VB/VC

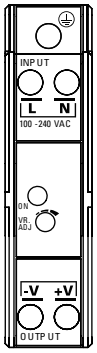

PS5R-VD/VE/VF

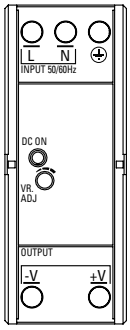

PS5R-VG

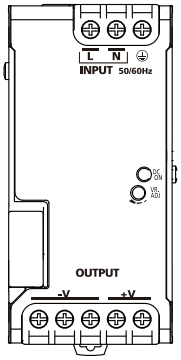

Marking	Name	Description
L, N	AC Input Terminal	Voltage range: 85 to 264V AC/100 to 370V DC
⏚	Ground Terminal	Be sure to connect this terminal to a proper ground.
+V, -V	DC Output Terminals	+V: Positive output terminal -V: Negative output terminal
VR.ADJ	Output Voltage Adjustment	Allows adjustment within ±10%. (VE = ±5%) Turning clockwise increases the output voltage. Turning counterclockwise decreases the output voltage.
DC ON	Operation Indicator (green)	Illuminates when the output voltage is on.

ACCESSORIES

Panel Mounting Bracket[2]

Applicable Switching Power Supply	Part Number	Remarks
PS5R-VB PS5R-VC	PS9Z-5R1B	—
	PS9Z-5R2B	For side mounting
PS5R-VD PS5R-VE	PS9Z-5R1C	—
PS5R-VF	PS9Z-5R1E	—
PS5R-VG	PS9Z-6R1F	—
	PS9Z-6R2F	For side mounting

Note 2: Used when installing on a panel directly.

DIN Rail (35mm-wide)

Length	Part Number	Material
1000mm	BNDN1000	Aluminum

End Clip

Part Number
BNL6
BNL8

DIMENSIONS (mm)

Tolerance: ±1mm

PS5R-VA

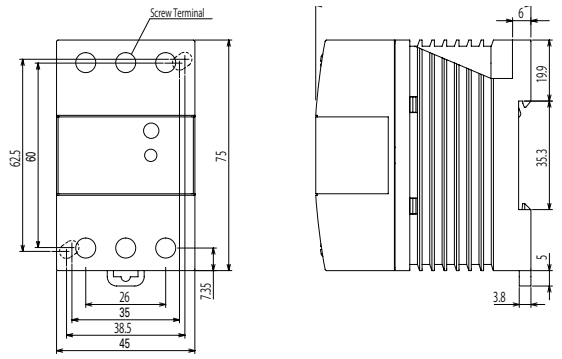

PS5R-VB/VC

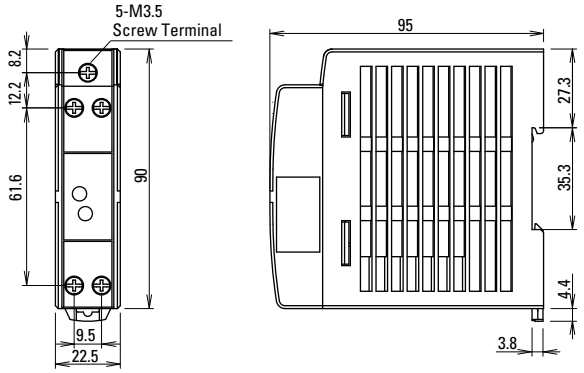

PS5R-VD/VE

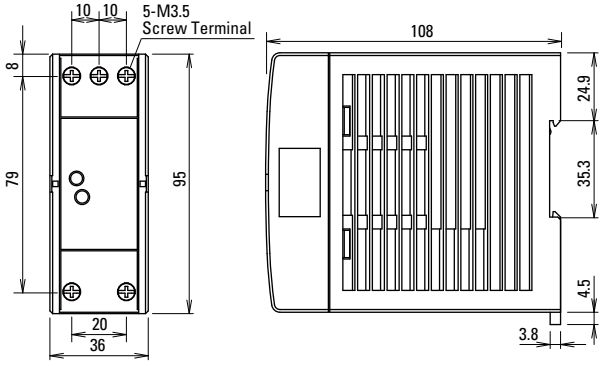

PS5R-VF

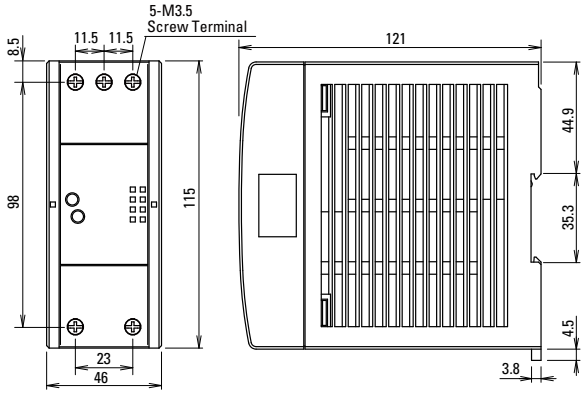

PS5R-VG

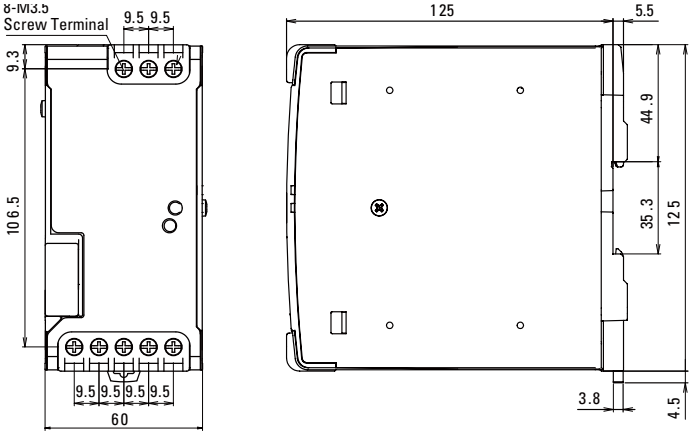

Panel Mounting Bracket

PS9Z-5R1B

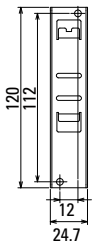

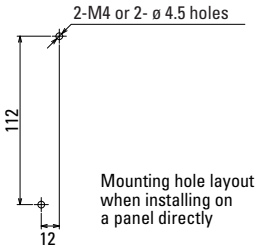

Mounting hole layout when installing on a panel directly

PS9Z-5R2B Side-mount

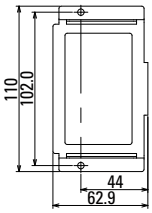

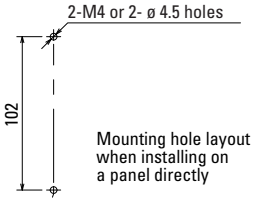

Mounting hole layout when installing on a panel directly

When installed on switching power supply

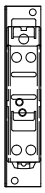

Front View

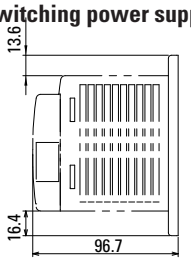

Side View

Side View

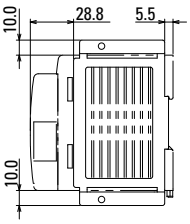

Front View

PS9Z-5R1C

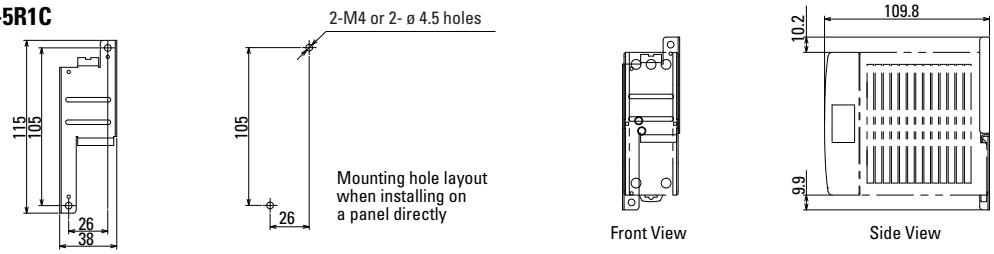

PS9Z-5R1E

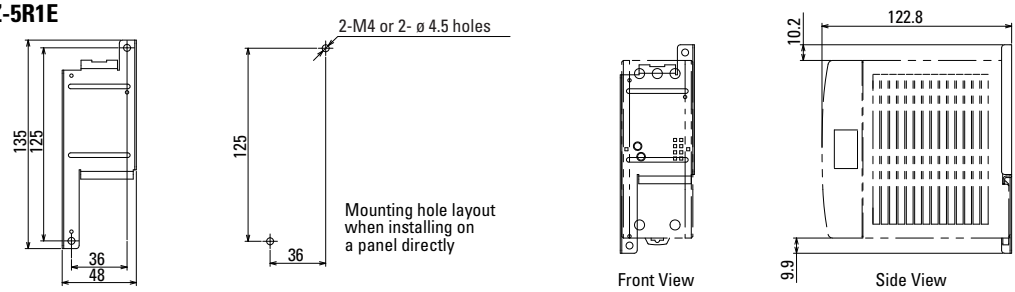

PS9Z-6R1F

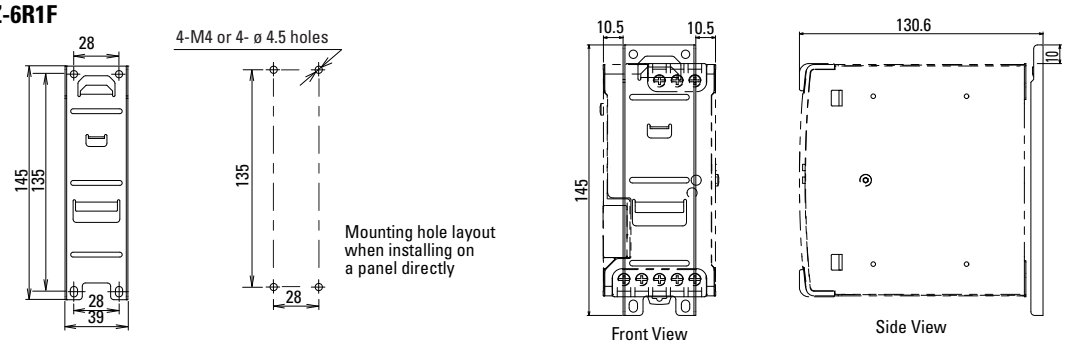

PS9Z-6R2F Side-mount

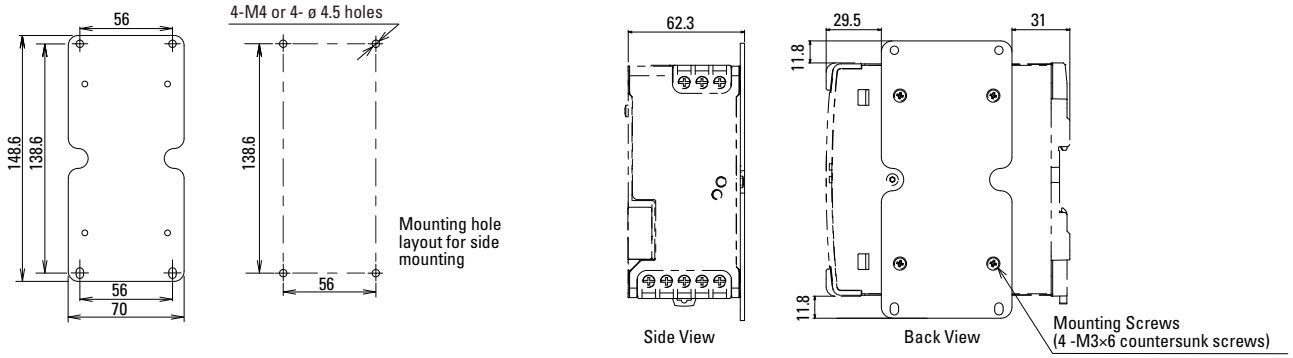

MTBF*

PS5R-VA:	**1,150,000H minimum**	**MIL-HDBK-217FN2 (GB, 30°C)**
PS5R-VB:	**900,000H minimum**	
PS5R-VC:	**650,000H minimum**	
PS5R-VD:	**450,000H minimum**	
PS5R-VE:	**380,000H minimum**	
PS5R-VF:	**350,000H minimum**	
PS5R-VG:	**290,000H minimum**	

*MTBF stands for Mean Time Between Failure, which is calculated according to statistical device failures, and indicates reliability of a device. It is the statistical representation of the likelihood of the unit to fail and does not necessarily represent the expected life of a product.

SAFETY PRECAUTIONS

The PS5R-V should be placed in a proper enclosure. It is designed to be used with general electrical equipment and industrial electric devices

- Do not use switching power supplies with electric equipment whose malfunction or inadvertent operation may damage the human body or life directly.
- Make sure that the input voltage and output current do not exceed the ratings. If the input voltage and output current exceed the ratings, electric shock, fire, or malfunction may occur.
- Do not touch the terminals of the switching power supply while input voltage is applied, otherwise electric shock may occur.
- Provide the final product with protection against malfunction or damage that may be caused by malfunction of the switching power supply.
- Operating temperatures should not exceed the ratings. Be sure to note the derating characteristics. If the operating temperature exceeds the ratings, electric shock, fire, or malfunction may occur.
- Blown fuses indicate that the internal circuits are damaged. Contact IDEC for repair. Do not just replace the fuse and reoperate, otherwise electric shock, fire, or malfunction may occur.
- Do not use the switching power supplies to charge rechargeable batteries.
- Do not overload or short-circuit the switching power supply for a long period of time, otherwise the internal elements may be damaged.
- Do not disassemble, repair, or modify the power supplies, otherwise the high voltage internal part may cause electric shock, fire, or malfunction.
- The fuse inside the PS5R-V switching power supply is for AC input. Use an external fuse for DC input.

OPERATING INSTRUCTIONS

Notes for installation

- Do not close the top or bottom openings of the PS5R-V to allow for heat radiation by convection.
- When mounting multiple PS5R-V switching power supplies side by side, maintain a minimum of 10 mm clearance. Observe the derating curves in consideration of the ambient temperature.

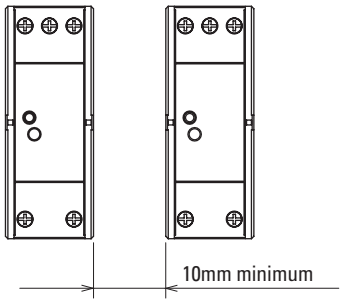

- When the derating voltage may exceed the recommended value, provide forced air-cooling.
- Make sure to wire the ground terminal correctly.
- For wiring, use wires of heat resistance of 60°C or higher (PS5R-VB: 80°C or higher). Use copper wire of the following sizes, according to the rated current.

Terminal	Wire Size (allowable current)	Wire Type
Input	AWG 18 to 14	Copper Solid/Stranded
Output	AWG18 to 14 (AWG18: 7A, AWG16: 10A, AWG14: 15A)	

Cross-Sectional are AWG18: 0.82mm^2, AWG16: 1.31mm^2, AWG14: 2.0mm^2

Applicable crimp terminal (reference)

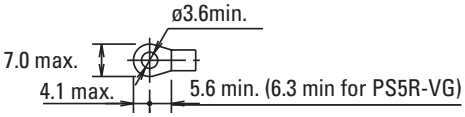

- Recommended tightening torque of the input and output terminals is 1.0 to 1.3Nm (0.8N·m for UL).

Mounting on DIN Rails

1. Use a 35mm-wide DIN rail.

2.Place the PS5R-V on the DIN rail as shown with input terminal side up (①), and press the PS5R-V towards the DIN rail (②). Make sure that the PS5R-V is installed firmly.

3. Use BNL6 end clips to ensure power supplies do not slide off the end of the DIN rail. Use of BNL8 end clips is recommended when excessive vibration or shock is anticipated.

Removal

- Insert a flat screwdriver into the slot in the clamp, and pull out until it clicks (③). The lock mechanism is released and the PS5R-V can be removed (④). When mounting the PS5R-V again, push in the latch first.

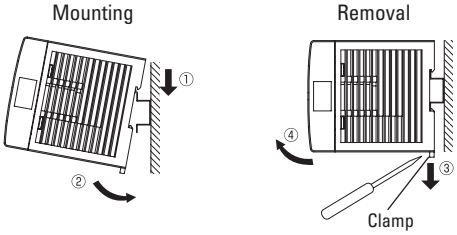

Installing a Panel Mounting Bracket

Panel Mounting Bracket (PS9Z-5R1□, PS9Z-6R1F)

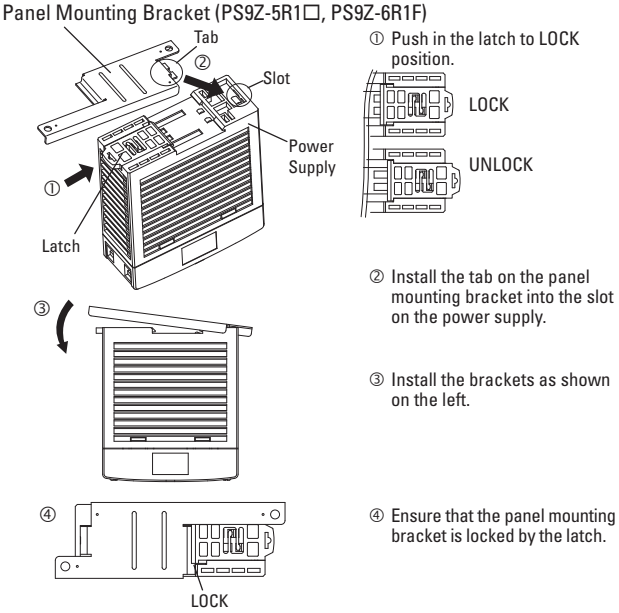

Panel Mounting Bracket (PS9Z-5R2B)

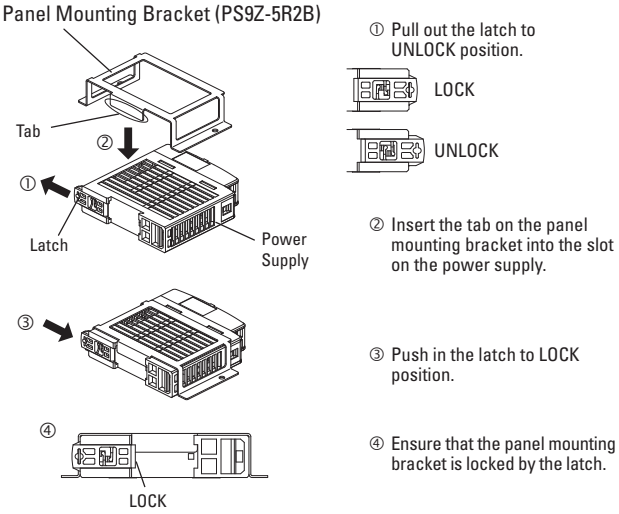

Installing PS9Z-6R2F Side-mount Panel Mounting Bracket

Install the bracket on the switching power supply using four M3 × 6 countersunk screws supplied with the bracket. Recommended tightening torque is 0.5 to 0.6N.m (should be in the center positions)

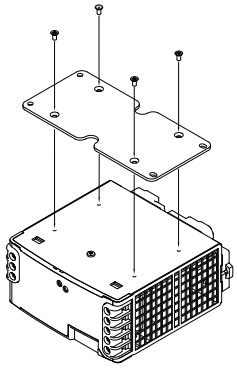

Adjustment of Output Voltage

The output voltage can be adjusted within ±10% (VE: ±5%) of the rated output voltage by using the VR.ADJ control on the front. Turning the VR.ADJ clockwise increases the output voltage. Turning the VR.ADJ counterclockwise decreases the output voltage.

Overcurrent Protection

The output voltage drops automatically when an overcurrent flows due to an overload or short circuit. Normal voltage is automatically restored when the load returns to normal conditions.

Insulation/Dielectric Test

When performing an insulation/dielectric test, short-circuit the input (between L and N) and output (between +V and -V). Do not apply or interrupt the voltage quickly, otherwise surge voltages may be generated and the PS5R-V may be damaged.

Notes for Operation

- Output interruption may indicate blown fuses. Contact IDEC.
- The PS5R-V switching power supply contains an internal fuse for AC input. When using DC input, install an external fuse. To avoid blown fuses, select a fuse in consideration of the rated current of the internal fuse.

Rated Current of Internal Fuses

Part Number	Internal Fuse Rated Current
PS5R-VA/VB/VC	2A
PS5R-VD/VE/VF	4A
PS5R-VG	6.3A

- Avoid overload and short-circuit for a long period of time, otherwise the internal elements may be damaged.
- DC input operation is not subject to safety standards.

Rust and Scratches on Metal parts

Bonded metal parts are used for the PS5R-V. Rust on the edge and scratches on the surfaces may be developed depending on the storage condition, but the performance of the PS5R-V is not affected.

Noise

Small acoustic noise inside the PS5R-V may be heard depending on the input voltage and load, but the performance of the PS5R-V is not affected.

Series Operation

Series operation is allowed. Connect Schottky barrier diodes D as shown below. Select a Schottky diode in consideration of the rated current. The diode's reverse voltage must be higher than the PS5R-V's output voltage.

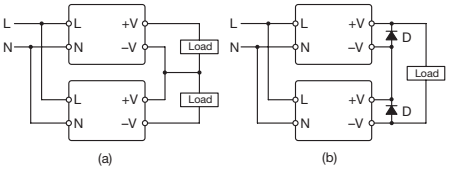

Parallel Operation

Parallel operation is not possible to increase the output capacity, because the internal elements and load may be damaged.

Backup Operation

Backup operation is a connection method of two switching power supplies in parallel for emergency. Normally one switching power supply has a sufficient output. If one switching power supply fails, another one operates to continue the output. Make sure that the sum of power consumption by load and diode is not greater than the rated wattage (rated voltage × rated current) of one switching power supply.

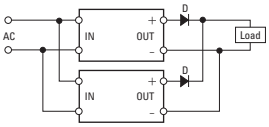

Select a diode in consideration of:
Diode's current must be more than double the PS5R-V's output current. Take heat dissipation into consideration.

WARRANTY

IDEC warranties the PS5R-V switching power supply for a period of five years from the date of shipment.

Scope

IDEC agrees to repair or replace the PS5R-V switching power supply if the product has been operated under the following conditions. The maximum value of output capacity is within the range shown in "Operating Temperature vs. Output Current on page 3.

1. Average operating temperature (ambient temperature of switching power supply) is 40°C maximum.
2. The load is 80% maximum.
3. Input voltage is the rated input voltage.
4. Standard mounting style

IDEC shall not be liable for other damages including consequential, contingent or incidental damages. Warranty does not apply if the PS5R-V switching power supply was subject to:

1. Inappropriate handling, or operation beyond specifications.
2. Modification or repair by other than IDEC.
3. Failure caused by other than the PS5R-V switching power supply.
4. Failure caused by natural disasters.

IDEC Corporation • 1175 Elko Drive • Sunnyvale, CA 94089 • 800-262-IDEC (4332) • Fax: 408-745-5258 • www.IDEC.com/usa

©2016 IDEC Corporation. All Rights Reserved. PS9Y-DS500-1 04/16 5K

EDS-205 Series

5-port entry-level unmanaged Ethernet switches

Features and Benefits

- 10/100BaseT(X) (RJ45 connector)
- IEEE802.3/802.3u/802.3x support
- Broadcast storm protection
- DIN-rail mounting ability
- -10 to 60°C operating temperature range

Certifications

Introduction

The EDS-205 Series supports IEEE 802.3/802.3u/802.3x with 10/100M, full/half-duplex, MDI/MDIX auto-sensing RJ45 ports. The EDS-205 Series is rated to operate at temperatures ranging from -10 to 60°C, and is rugged enough for any harsh industrial environment. The switches can be easily installed on a DIN rail as well as in distribution boxes. The DIN-rail mounting capability, wide operating temperature, and the IP30 housing with LED indicators make the plug-and-play EDS-205 switches reliable and easy to use.

Specifications

Ethernet Interface	
Standards	IEEE 802.3 for 10BaseT IEEE 802.3u for 100BaseT(X) and 100BaseFX IEEE 802.3x for flow control
10/100BaseT(X) Ports (RJ45 connector)	Full/Half duplex mode Auto MDI/MDI-X connection Auto negotiation speed

Switch Properties	
Processing Type	Store and Forward
MAC Table Size	1 K
Packet Buffer Size	512 kbits

Power Parameters	
Input Voltage	24 VDC
Input Current	0.11 A @ 24 VDC
Operating Voltage	12 to 48 VDC
Connection	1 removable 3-contact terminal block(s)
Overload Current Protection	1.1 A @ 24 VDC
Reverse Polarity Protection	Supported

Physical Characteristics

Housing	Plastic
IP Rating	IP30
Dimensions	24.9 x 100 x 86.5 mm (0.98 x 3.94 x 3.41 in)
Weight	135 g (0.30 lb)
Installation	DIN-rail mounting

Environmental Limits

Operating Temperature	-10 to 60°C (14 to 140°F)
Storage Temperature (package included)	-40 to 85°C (-40 to 185°F)
Ambient Relative Humidity	5 to 95% (non-condensing)

Standards and Certifications

Safety	EN 60950-1, UL 508
EMC	EN 55032/24
EMI	CISPR 32, FCC Part 15B Class A
EMS	IEC 61000-4-2 ESD: Contact: 4 kV; Air: 8 kV IEC 61000-4-3 RS: 80 MHz to 1 GHz: 3 V/m IEC 61000-4-4 EFT: Power: 1 kV; Signal: 0.5 kV IEC 61000-4-5 Surge: Power: 1 kV; Signal: 1 kV IEC 61000-4-6 CS: 3 V IEC 61000-4-8 PFMF
Shock	IEC 60068-2-27
Vibration	IEC 60068-2-6
Freefall	IEC 60068-2-31

MTBF

Time	3,915,945 hrs
Standards	Telcordia (Bellcore), GB

Warranty

Warranty Period	5 years
Details	See www.moxa.com/warranty

Package Contents

Device	1 x EDS-205 Series switch
Documentation	1 x quick installation guide 1 x warranty card

Dimensions

Unit: mm (inch)

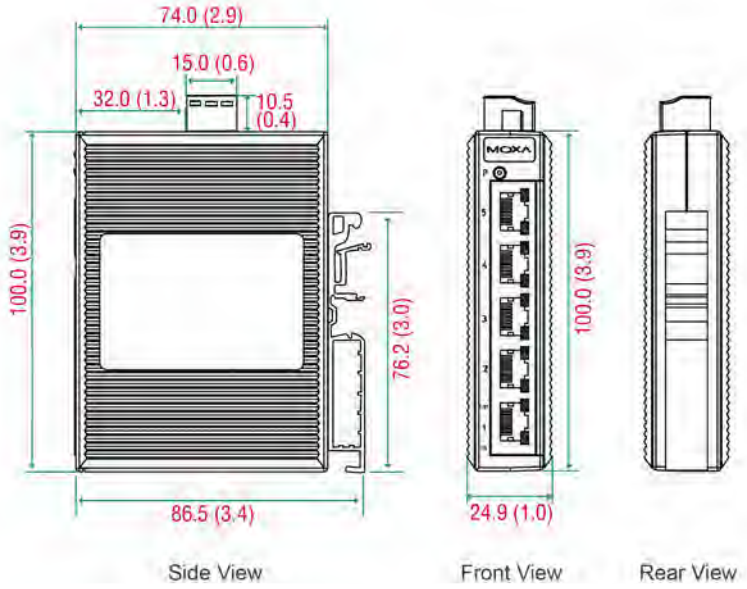

Ordering Information

Model Name	10/100BaseT(X) Ports RJ45 Connector	Housing Material	Operating Voltage	Operating Temp.
EDS-205	5	Plastic	12-48 VDC	-10 to 60°C

Accessories (sold separately)

Power Supplies

DR-120-24	120W/2.5A DIN-rail 24 VDC power supply with universal 88 to 132 VAC or 176 to 264 VAC input by switch, or 248 to 370 VDC input, -10 to 60°C operating temperature
DR-4524	45W/2A DIN-rail 24 VDC power supply with universal 85 to 264 VAC or 120 to 370 VDC input, -10 to 50° C operating temperature
DR-75-24	75W/3.2A DIN-rail 24 VDC power supply with universal 85 to 264 VAC or 120 to 370 VDC input, -10 to 60°C operating temperature
MDR-40-24	DIN-rail 24 VDC power supply with 40W/1.7A, 85 to 264 VAC, or 120 to 370 VDC input, -20 to 70°C operating temperature
MDR-60-24	DIN-rail 24 VDC power supply with 60W/2.5A, 85 to 264 VAC, or 120 to 370 VDC input, -20 to 70°C operating temperature

Rack-Mounting Kits

RK-4U	19-inch rack-mounting kit

© Moxa Inc. All rights reserved. Updated Jan 30, 2019.

This document and any portion thereof may not be reproduced or used in any manner whatsoever without the express written permission of Moxa Inc. Product specifications subject to change without notice. Visit our website for the most up-to-date product information.

Sierra Wireless AirLink® ES450 Enterprise Gateway

Reliable 4G enterprise connectivity

The AirLink® ES450 is a reliable, secure LTE gateway designed to connect the distributed enterprise. With state-of-the-art global LTE coverage from the proven leader in LTE te hnology the ES450 provides broa band connectivity for POS devices an other business cr tical equipment to e sure you can con inue to serve customer requests. Together with AirLink Management Service, you have a one-stop solution to provision devices, monitor cellular data usage, and remotely maintain software versions and configurations.

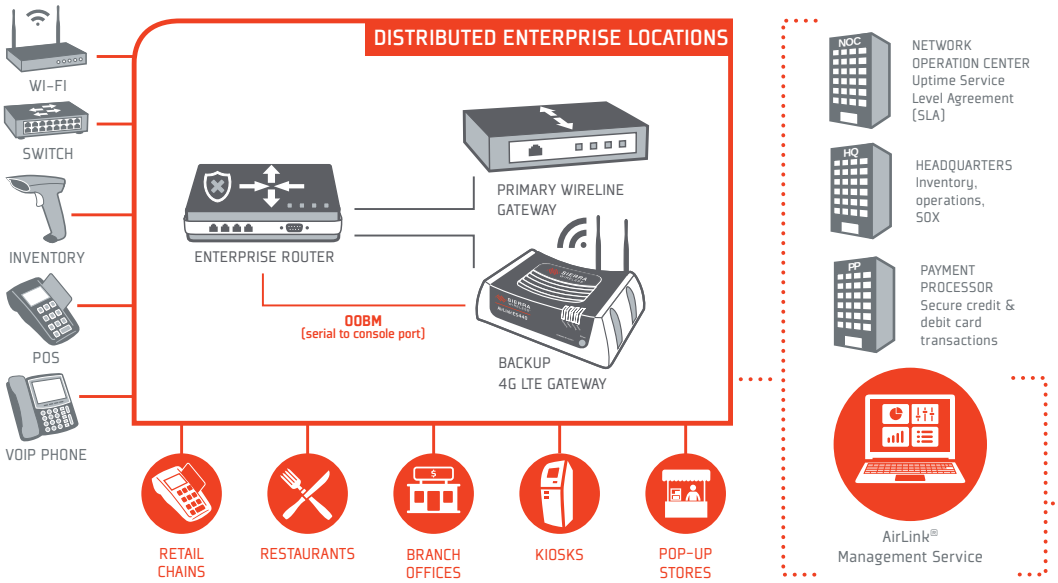

- Primary and failover 4G connectivity for distributed enterprise
- Remotely troubleshoot and restore enterprise network equipment
- Securely manage transactions

- Configure, monitor and manage gateways remotely
- Set alerts for critical events and prevent downtime
- Track data usage
- Centrally manage software upgrades

FEATURES

- Full featured LTE gateway and terminal server for both primary and failover connectivity
- State of the art LTE coverage spanning 11 LTE frequency bands
- Proven and documented interoperability with major enterprise router vendors
- Cellular out of band management for remotely troubleshooting and restoring enterprise IT equipment
- Reliable Static Route eliminates redundant wireless data usage
- Advanced routing such as NEMO/ DMNR included as standard
- Up to 5 VPN tunnels to support secure communications over cellular networks
- Secure configuration for PCI compliant systems
- Remote configuration, software updates, and data usage monitoring with AirLink Management Service
- Integrated by industry leading solution partners in the Solution Exchange
- Industry leading warranty, including free software maintenance and accelerated hardware replacement

ENTERPRISE GATEWAY AND TERMINAL SERVER

The AirLink ES450 enterprise gateway delivers mission-critical LTE connectivity either as a primary connection or as a failover solution to protect against landline failure. With documented interoperability guides for the industry's leading enterprise routers, the ES450 allows you to deploy your enterprise LTE connectivity solution quickly and seamlessly.

In addition to providing broadband connectivity, the ES450 also provides a terminal server for remote out-of-band management of network equipment. Using the AirLink ES450 to connect to the router console interface, IT administrators can remotely troubleshoot and repair network equipment. Personnel no longer need to be deployed to manually reset networking equipment, dramatically reducing the number of field visits.

SECURE WIRELESS BROADBAND COMMUNICATIONS

The ES450 is loaded with features to secure your critical enterprise data. With up to 5 concurrent VPN sessions, you can ensure secure communications to multiple back-end systems. Remote authentication management allows you to use enterprise RADIUS or TACACS+ systems to manage access to devices. Port filtering and trusted IP protect devices connected to your ES450 from unauthorized access. Finally, secure configuration options ensure compliance to PCI standards for payment systems.

FUTURE PROOF YOUR DEPLOYMENT

To protect your investment in mobile broadband technology, you want software upgrades and security enhancements to be readily and freely available and easy to deploy. You want the assurance that any issues will be quickly and thoroughly corrected. For this reason, AirLink offers unlimited access to software updates and enhancements free of charge. We also offer a standard 3 year manufacturer's warranty, and 24 hour turnaround on hardware replacements.

SIERRA WIRELESS®

BENEFITS

- Supports present and future high speed LTE networks
- Proven reliability, with over 1 million AirLink devices deployed
- Enterprise-grade security
- Remotely monitor and manage device connectivity
- Premium enterprise features, software updates, and hardware replacement included

MANAGE, MONITOR AND MAINTAIN YOUR DEPLOYMENT

With a deployment of LTE enterprise gateways, you need to stay informed of important information like mobile data usage and failover status. In addition, you need to maintain device configurations, update device software, and remotely diagnose reported issues. AirLink Management Service (ALMS) has been ranked by ABI Research as "Best in Class" among competing device management services. This highly advanced application supports over-the-air device registration, configuration and software updates. Dashboards display up-to-date views of the entire deployment, and custom reports can be set-up to monitor critical events and prevent downtime.

DASHBOARD

FAILOVER MONITOR

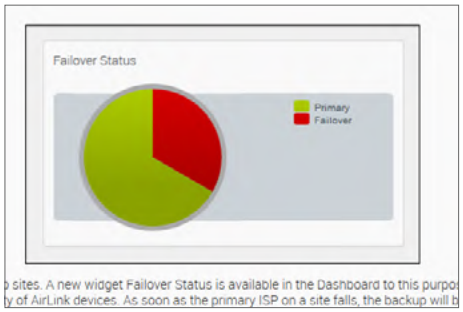

SOFTWARE UPGRADES/UPDATES

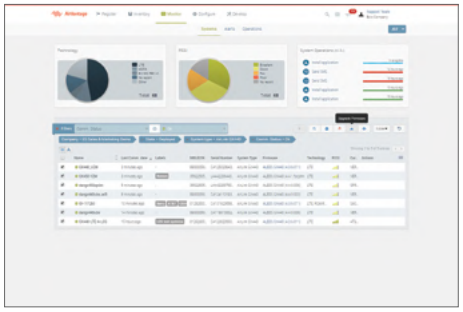

DATA USAGE ALERT

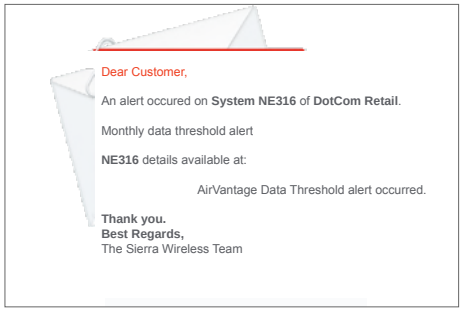

SIERRA WIRELESS

Sierra Wireless
AIRLINK ES450

	Specification
CELLULAR WAN	**North American Model (Sierra Wireless MC7354)** • Carrier Approvals: Verizon, AT&T, Sprint, T-Mobile USA, US Cellular, Rogers, Bell, Telus • Supported Frequency Bands - LTE: 1900(B2), AWS(B4), 850(B5), 700(B13), 700(B17), 1900(B25) - WCDMA: 2100(B1), 1900(B2), AWS(B4), 850(B5), 900(B8) - EV-DO/CDMA: 800(BC0), 1900(BC1), 1700(BC10) - GSM/GPRS/EDGE: Quad-band • Industry Approvals: FCC, IC, PTCRB • SIM Interface (2FF) **International Model (Sierra Wireless MC7304)** • Supported Frequency Bands - LTE: 2100(B1), 1800(B3), 2600(B7), 900(B8), 800(B20) - WCDMA: 2100(B1), 1900(B2), 850(B5), 900(B8) - GSM/GPRS/EDGE: Quad-band • Industry Approvals: CE, RCM, GCF, R&TTE • Automatic SIM based network operator sw tching • SIM Interface (2FF)
HOST INTERFACES	10/100 Base-T RJ45 Ethernet port RS-232 Serial Console Port on DB-9 Connector USB 2.0 Client (Micro-B Connector) 2 SMA antenna connectors (Primary, Secondary/Divers ty)
INPUT/OUTPUT	Configurable I/O pin on power connector • Dig tal Input ON Vo tage: 3.3 to 30 VDC • Dig tal Input OFF Vo tage: 0 to 1.2 VDC • Dig tal Output > 200mA @ 30VDC
LAN (ETHERNET/USB)	DNS, DNS Proxy DHCP Server IP Passthrough VLAN Host Interface Watchdog PPPoE
SERIAL	Reverse Telnet
NETWORK AND ROUTING	Network Address Translation (NAT) Port Forwarding Host Port Routing NEMO/DMNR VRRP Reliable Static Route Dynamic DNS
VPN	IPsec, GRE, and SSL VPN Client Up to 5 concurrent tunnels Split Tunnel Dead Peer Detection (DPD) Mu tiple Subnets VPN Failover
DIMENSIONS	142 x 98 x 41 mm (5.6 x 3.9 x 1.6 in) 397g (14oz.)

	Specification
SECURITY	Remote Authentication (LDAP, RADIUS and TACACS+) DMZ Inbound and outbound port fi tering Inbound and outbound Trusted IP MAC Address Filtering PCI DSS V3.0 compatible
EVENTS ENGINE	Custom event triggers and reports Configurable interface, no programming Event Types: Digital Input, Network Parameters, Data Usage, Timer, Power, Device Temperature Report Types: SNMP Trap Event Actions: Drive Relay Output
AIRLINK MANAGEMENT SERVICE	Secure cloud-based device management application Remote provisioning and airtime activation Gateway configuration and template management Configurable mon toring and alerting Over the air software and radio module firmware updates Auto configuration
MANAGEMENT INTERFACES	Web-Based User Interface Device Configuration Templates Over-the-air software and radio module firmware updates AT Command Line Interface (Telnet/SSH/Seria) SMS Commands SNMP
APPLICATION FRAMEWORK	ALEOS Application Framework (AAF) LUA Scripting Language Eclipse-based IDE Integrated with AirVantage®
POWER	Analog Ignition Sense and Power Management Input Voltage: 9 to 36 VDC Low Power mode triggerable upon low voltage, timer delay (ign tion sense), periodic timer
ENVIRONMENTAL	Operating Temperature: -20°C to +60°C / -4°F to +140°F Storage Temperature: -30°C to +70°C / -22°F to +158°F Mil tary Spec MIL-STD-810G conformance to shock, vibration
INDUSTRY CERTIFICATIONS	Safety: IECEE Certification Bodies Scheme (CB Scheme), UL 60950 Vehicle Usage: ISO7637-2 Environmental: RoHS, REACH, WEEE
SUPPORT AND WARRANTY	3 year standard warranty Optional 2 year warranty extension 1-day Accelerated Hardware Replacement available through participating resellers Unrestricted device software upgrades

About Sierra Wireless

Sierra Wireless is building the Internet of Things with intelligent wireless solutions that empower organizations to innovate in the connected world. We offer the industry's most comprehensive portfolio of 2G, 3G, and 4G embedded modules and gateways, seamlessly integrated w th our secure cloud and connectiv ty services. OEMs and enterprises worldwide trust our innovative solutions to get their connected products and services to market faster.

For more information, vis t www.sierrawireless.com.

Sierra Wireless, the Sierra Wireless logo, AirLink, and the red wave design are trademarks of Sierra Wireless. Other registered trademarks that appear on this brochure are the property of the respective owners. © 2015 Sierra Wireless, Inc. 2016.05.26

SIERRA WIRELESS

ANT-121-002

Vandal Resistant 3G/4G/LTE Omni-Directional Antenna

Applications

- Kiosks
- Vending Machines
- Digital Signage
- Video Surveillance
- Point-of-Sale Terminals
- SCADA / Telemetry / PLCs

Product Features

- Vandal Resistant
- Low Profile ~ 3 inches Tall
- Weatherproof
- Compatible with all 3G & 4G/LTE Networks
- Compatible with most Cellular Modems/Routers
- 3 – 5 dBi Peak Gain
- Omni-Directional
- SMA Male Connector on 10 ft Low-Loss Coax

Ordering Information

Part No.	Description
ANT-121-002	Vandal Resistant Low Profile 3G/4G/LTE Omni-Directional Antenna - 3-5 dBi Gain - Fixed Mount - 10 ft Coax Lead

General Description

This low profile (~ 3 inches tall) fixed screw mount omni-directional antenna provides 3 to 5 dBi of gain and supports all cellular frequency bands for AT&T, Verizon, Sprint, T-Mobile, Bell, Rogers, Telus and other cellular carriers worldwide.

Ideal for use in vending machines, meter housings, equipment sheds, NEMA enclosures or other locations requiring a low-profile vandal resistant external antenna. Also suitable for vehicle mounting on buses, vans, trucks or other mobile installations.

Permanently mounts via a 5/8 in. (16 mm) hole with locking internal nut. Resists vandalism with no exposed coax cable, high impact ABS radome shell and an extra thick threaded mounting post. Includes 10 ft of low-loss RG58U coax fed through center mounting post. Includes "L" bracket for optional wall mounting.

Integrated SMA male plug connector mates with SMA female jack found on most cellular modems and routers.

Completely waterproof (IP67) when properly installed with post extending into a water-tight enclosure. Not waterproof when used exclusively with wall bracket.

For optimum performance this antenna should be mounted on a flat, horizontal metal surface at least 8 inches in diameter.

© *Proxicast, LLC. All rights reserved.*

Electrical Specifications

Parameter	Rating
Frequency Range	698-960 / 1710-2700 MHz includes all 2G, 3G, 4G, LTE Bands
Gain	3 – 5 dBi
VSWR	≤ 2.0:1
Input Impedance	50 Ohm
Polarization	Vertical
Max Input Power	50 W
Ground Plane	8 inch (20 cm) diameter min

Mechanical Specifications

Parameter	Rating
Connector Type	SMA Male (plug)
Cable Length	10 ft (3 m) of LMR RG58U low-loss coax
Height	Radome: 3.2 inches (82 mm) above mounting surface Overall: 4.0 inches (102 mm)
Diameter	Radome: 1.9 inches (48 mm) at base Mounting post: 0.55 inches (14 mm)
Weight	6.2 oz (176 g excluding mounting bracket)
Materials	Radome: UV stabilized ABS plastic Connector: Brass with Nickel plating Mounting Bracket: Aluminum Adhesive Pad: Urethane Foam
Antenna Color	Black
Operating Temperature	-40°C to +70°C
Environmental Rating	IP67 (waterproof)

Operation of this device outside the parameter ranges given above may cause permanent damage.

© Copyright Proxicast, LLC. All rights reserved.

Mechanical Dimensions

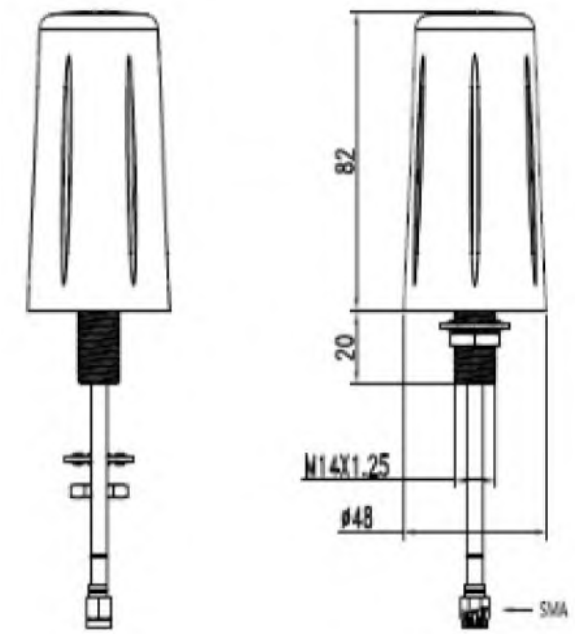

With Wall Mounting Bracket

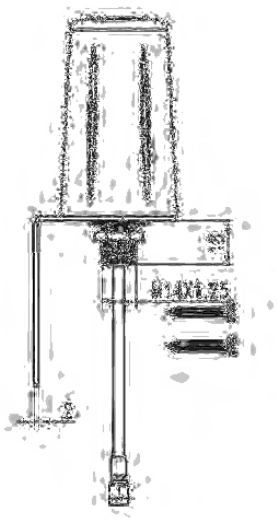

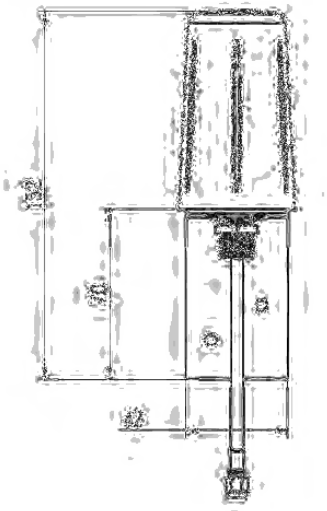

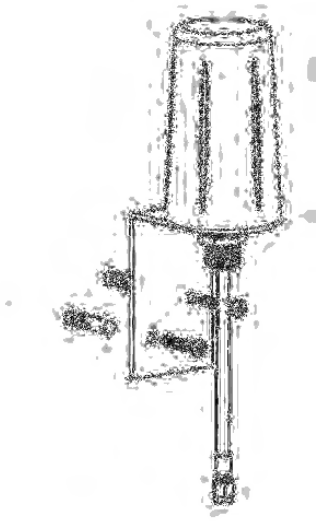

© Copyright Proxicast, LLC. All rights reserved.

Radiation Patterns

800 MHz

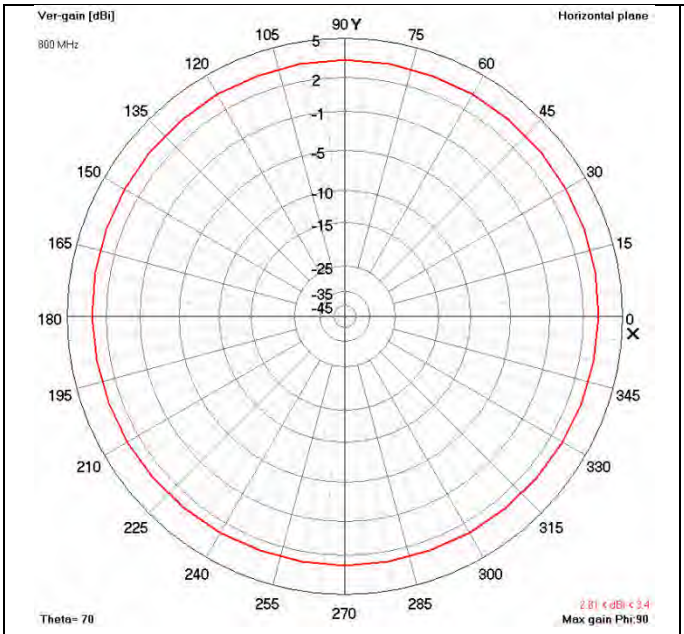

Horizontal (Azimuth) Plane

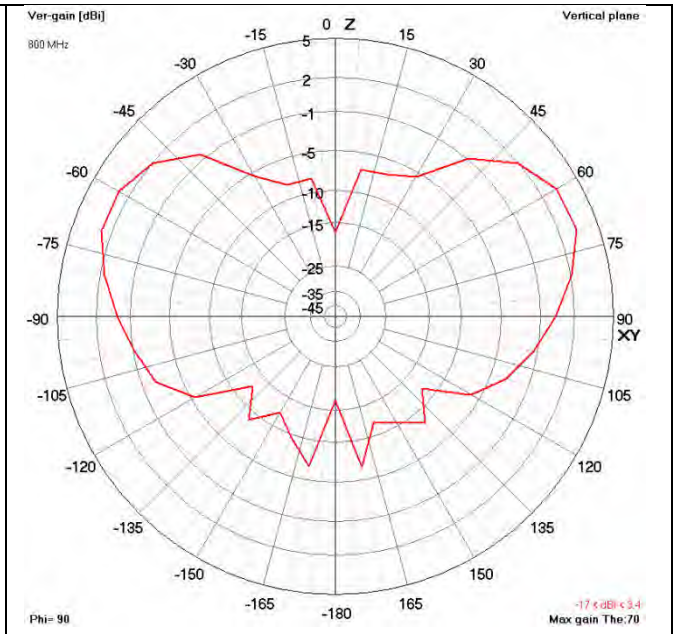

Vertical (Elevation) Plane

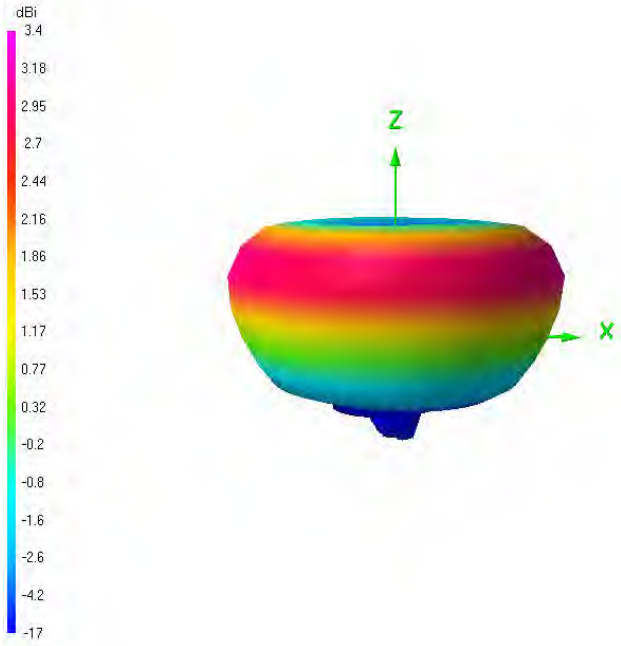

© Copyright Proxicast, LLC. All rights reserved.

Radiation Patterns

1850 MHz

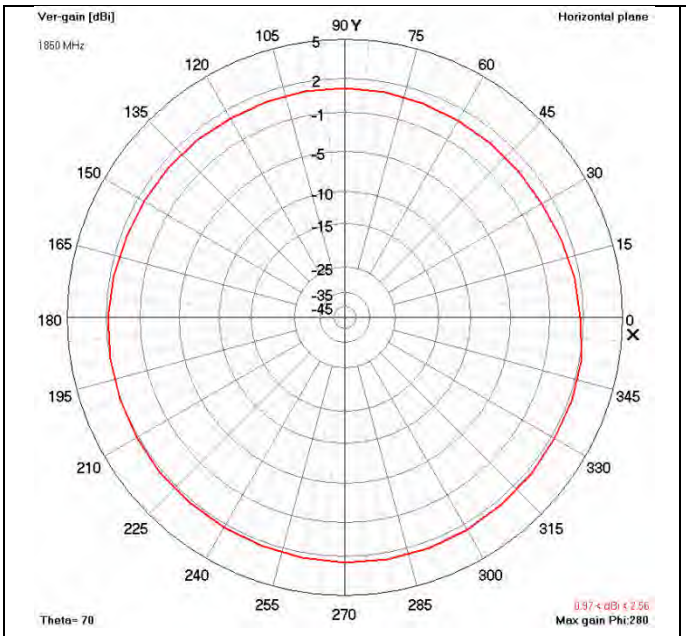

Horizontal (Azimuth) Plane

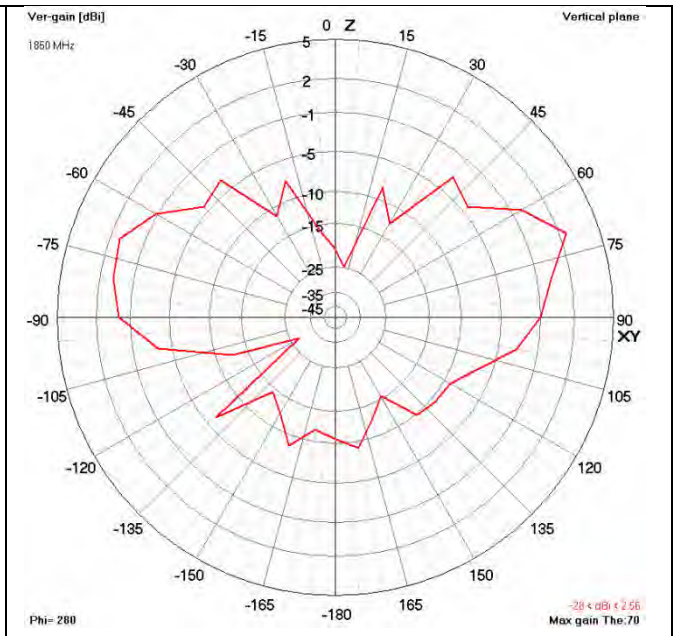

Vertical (Elevation) Plane

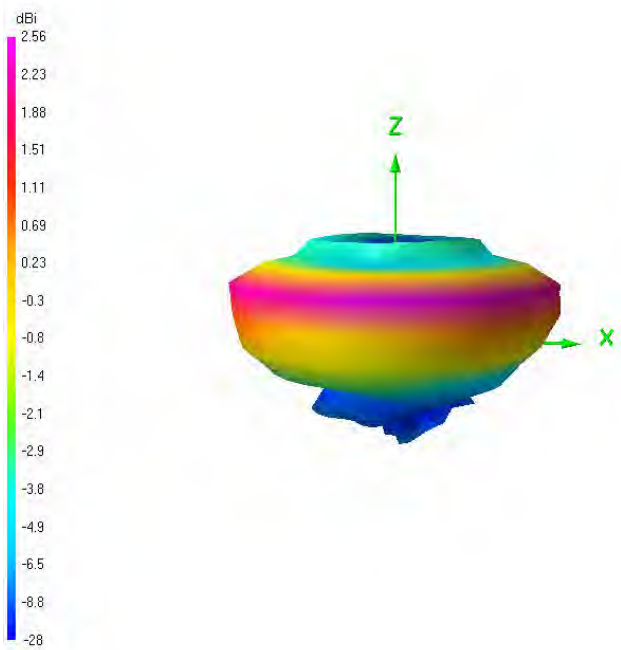

© Copyright Proxicast, LLC. All rights reserved.

Radiation Patterns

2700 MHz

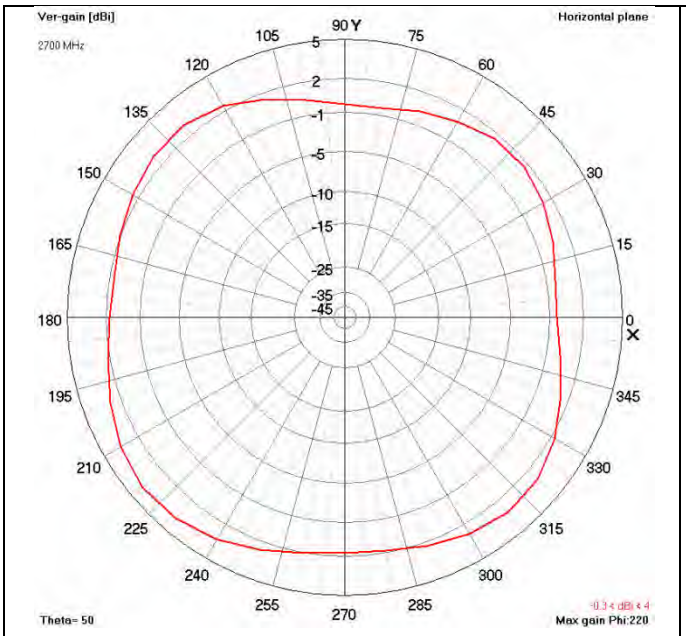

Horizontal (Azimuth) Plane

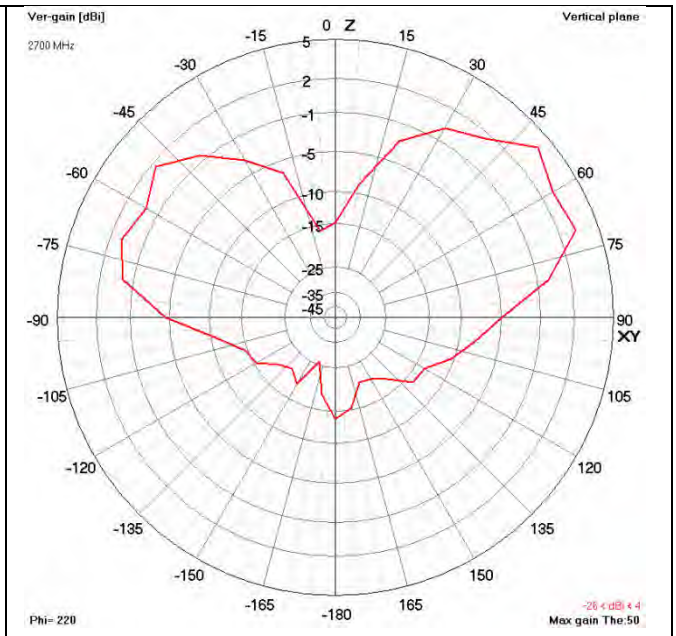

Vertical (Elevation) Plane

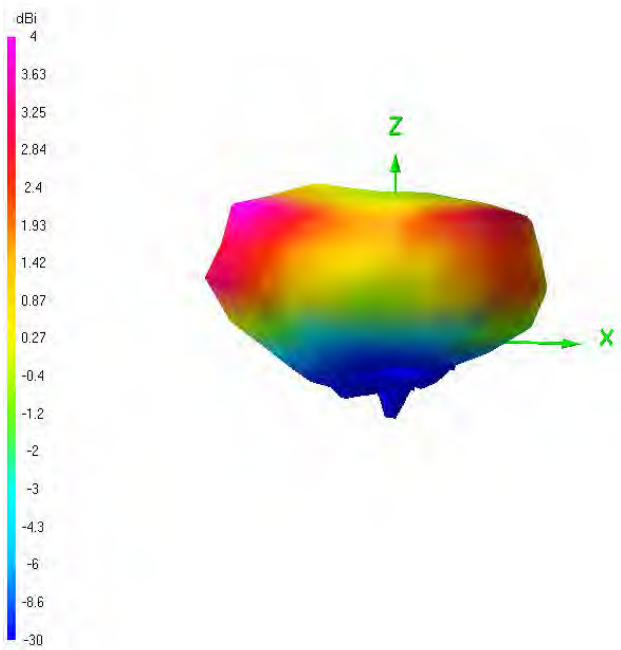

© Copyright Proxicast, LLC. All rights reserved.

Installation Instructions

- Position away from:
  - CRT/TVs
  - Lighting fixtures & motors
  - Other antennas & wireless devices
  - Low-E or tinted/coated windows
  - Large vertical metal or concrete objects
- Drill a 5/8” (16mm) hole in flat horizontal surface
- Remove mounting nut & washer and feed coax cable through hole
- Remove bottom plastic liner to expose adhesive
- Press antenna into hole and tighten nut & washer from underneath
- Optionally apply a thin bead of silicone caulk around the antenna rim
- Use 2 identical antennas spaced 22 inches apart if modem supports diversity or MIMO
- Keep coax lead cable as short as possible & weatherproof all outdoor connectors

Contact Information

For the latest specifications, additional product information, worldwide sales and distribution and information about Proxicast:

Web: www.proxicast.com **Tel:** **1-877-777-7694**

Email: sales@proxicast.com **1-412-213-2477**

Proxicast • 312 Sunnyfield Drive, Suite 200 • Glenshaw, PA 15116 USA

For technical questions and application information:

Email: support@proxicast.com

Important Notice

The information contained herein is believed to be reliable. Proxicast makes no warranties regarding the information contained herein. Proxicast assumes no responsibility or liability whatsoever for any of the information contained herein. Proxicast assumes no responsibility or liability whatsoever for the use of the information contained herein. The information contained herein is provided "AS IS, WHERE IS" and with all faults, and the entire risk associated with such information is entirely with the user. All information contained herein is subject to change without notice.

The information contained herein or any use of such information does not grant, explicitly or implicitly, to any party any patent rights, licenses, or any other intellectual property rights, whether with regard to such information itself or anything described by such information. Proxicast products are not warranted or authorized for use as critical components in medical, life-saving, or life-sustaining applications, or other applications where a failure would reasonably be expected to cause severe personal injury or death.

© Copyright Proxicast, LLC. All rights reserved.

CyberPower

CP600LCD
Intelligent LCD UPS

Offering significant energy savings, battery backup and surge protection.

A compact UPS with standby topology, the CyberPower Intelligent LCD CP600LCD provides battery backup (using simulated sine wave output) and surge protection for desktop computers, workstations, networking devices, and home entertainment systems. During longer power outages, the CP600LCD delivers enough battery backup power to perform a graceful shutdown to protect against the loss of data and damage to valuable electronics. The multifunction LCD provides real time status and alerts of potential problems. The CP600LCD comes with a three-year warranty and a $175,000 Connected Equipment Guarantee.

TYPICAL APPLICATIONS

- Desktop Computers
- Home Networking
- Home Theater Equipment
- Personal Electronics

FEATURES

- 600 VA / 340 W
- 8 Standard Outlets
- Standby Topology
- Full-time Surge Protection and Battery Backup
- Three-Year Warranty

SPECIFICATIONS

General	
UPS Topology	Standby
Energy Star Certified	Yes
Input	
Frequency Range	57 – 63 Hz
Plug Type	NEMA 5-15P
Plug Style	Right Angle, 45° Offset Right
Cord Length (ft)	6 ft

Output	
VA	600 VA
Watts	340 W
Automatic Voltage Regulation	No
On Battery Voltage	120 VAC ± 5%
On Battery Frequency	60 Hz ± 1%
On Battery Waveform	Simulated Sine Wave
Outlet Type	NEMA 5-15R
Outlets – Total	8
Outlets - Battery & Surge Protected	4
Outlets – Surge-Only Protected	4
Outlets - Transformer-Spaced	4
Overload Protection	Internal Circuitry Limiting
Transfer Time	4 ms

CP600LCD Intelligent LCD UPS

SPECIFICATIONS CONT.

Battery	
Runtime at Half Load (min)	13
Runtime at Full Load (min)	2
Battery Type	Sealed Lead-Acid
Battery Size	12V/7Ah
Battery Quantity	1
User Replaceable	Yes
Replacement Battery Cartridge	RB1270B
Replacement Battery Cartridge Quantity	1
Typical Recharge Time	8 hours
Surge Protection & Filtering	
Surge Suppression	1,030 J
EMI/RFI Filtration	Yes
Management & Communications	
Multifunction LCD Panel	Displays: Current/Load Level, Runtime, Battery Level, Input Voltage, Output Voltage, Battery In Use, Overload, Silent Mode, Normal Mode
LED Indicators	Power On, Wiring Fault
Audible Alarms	On Battery, Low Battery, Overload, Fault
HID Compliant USB Port	Yes
Serial Port	Yes
Software	PowerPanel® Personal

Physical	
Form Factor	Compact
Color	Black
Keyhole Mounting Slots	Yes
Dimensions - WxHxD (in)	11 x 6.8 x 3.5
Weight (lbs)	10.69
Environmental	
Operating Temperature	32 °F to 95 °F / 0 °C to 35 °C
Operating Relative Humidity	0 – 95% (non-condensing)
Certifications	
Safety	UL1778 cUL 107.3 FCC DOC Class B
Environmental	RoHS Compliant
Warranty	
Product Warranty	3 Years Limited
Connected Equipment Guarantee	Lifetime
CEG Amount	$175,000

©2018 Cyber Power Systems (USA), Inc. CyberPower is a registered trademark and brand of Cyber Power Systems (USA), Inc. All rights reserved. All other trademarks are the property of their respective owners. CyberPower reserves the right to change, without notice, marketing programs, product offerings and specifications. **www.cyberpowersystems.com**

1PA-0000507-00G

C-more Operator Panels Overview

Getting started

Installing the software and configuring the *C-more* panel is simple. You will need the following to successfully connect, configure and send a project to the panel:

- ***C-more*** touch panel - 6", 7" wide, 8", 10", 10" wide, 12" or 15" model
- ***C-more*** Programming Software, p/n EA9-PGMSW
- ***C-more*** programming cable, USB or Ethernet
- 12-24 VDC switching power supply or the optional ***C-more*** AC Power Adapter, p/n EA-AC
- Personal Computer - to run ***C-more*** programming software
- PLC communications cable (serial or Ethernet) to connect the ***C-more*** touch panel to your controller

Part Number	Description	Price
EA9-T6CL-R	*C-more* EA9 series touch screen HMI, 6in color TFT LCD, 320 x 240, QVGA, supports (1) serial and (2) USB ports and (1) memory card slot.	$506.00
EA9-T6CL	*C-more* EA9 series touch screen HMI, 6in color TFT LCD, 320 x 240, QVGA, supports (3) serial, (1) Ethernet and (2) USB ports and (1) memory card slot, audio line out.	$709.00
EA9-T7CL-R	*C-more* EA9 series touch screen HMI, 7in color TFT LCD, widescreen, 800 x 480, WVGA, supports (1) serial, (1) Ethernet and (2) USB ports and (1) memory card slot.	$472.00
EA9-T7CL	*C-more* EA9 series touch screen HMI, 7in color TFT LCD, widescreen, 800 x 480, WVGA, supports (3) serial, (1) Ethernet and (2) USB ports and (1) memory card slot, audio line out.	$548.00
EA9-T8CL	*C-more* EA9 series touch screen HMI, 8in color TFT LCD, 800 x 600, SVGA, supports (3) serial, (1) Ethernet and (2) USB ports and (1) memory card slot, audio line out.	$1,014.00
EA9-T10CL	*C-more* EA9 series touch screen HMI, 10in color TFT LCD, 800 x 600, SVGA, supports (3) serial, (1) Ethernet and (2) USB ports and (1) memory card slot, audio line out.	$1,309.00
EA9-T10WCL	*C-more* EA9 series touch screen HMI, 10in color TFT LCD, widescreen, 1024 x 600 pixel, WSVGA, LED backlight, supports (3) serial, (1) Ethernet and (2) USB ports, (1) memory card slot and (1) audio line out.	$695.00
EA9-T12CL	*C-more* EA9 series touch screen HMI, 12in color TFT LCD, 800 x 600, SVGA, supports (3) serial, (1) Ethernet and (2) USB ports, (2) memory card slots and (1) HDMI video out, audio line out.	$1,817.00
EA9-T15CL-R	*C-more* EA9 series touch screen HMI, 15in color TFT LCD, 1024 x 768 pixel, XGA, LED backlight, supports (1) serial, (1) Ethernet and (2) USB ports and (2) memory card slots.	$1,318.00
EA9-T15CL	*C-more* EA9 series touch screen HMI, 15in color TFT LCD, 1024 x 768, XGA, supports (3) serial, (1) Ethernet and (2) USB ports, (2) memory card slots and (1) HDMI video out, audio line out.	$2,029.00
EA9-PGMSW	*C-more* Windows-based programming software, CD. For use with *C-more* EA9 series touch panels. Requires USB or Ethernet connection to touch panel. (Does not support *C-more* EA7 series panels.)	$98.00
USB-CBL-AB3	Standard 3-ft. (0.9m) USB 2.0 cable, A-type connector to B-type connector, used to connect personal computer to any *C-more* touch panel for setup and programming. (Note: Touch panels require a power source for configuration and operation.)	$7.75
USB-CBL-AB6	Standard 6-ft. (1.8m) USB 2.0 cable, A-type connector to B-type connector, used to connect personal computer to any *C-more* touch panel for setup and programming. (Note: Touch panels require a power source for configuration and operation.)	$9.75
USB-CBL-AB10	Standard 10-ft (3 meter) USB 2.0 cable, A-type connector to B-type connector, used to connect personal computer to any *C-more* touch panel for setup and programming. (Note: Touch panels require a power source for configuration and operation.)	$18.50
USB-CBL-AB15	Standard 15-ft. (4.6m) USB 2.0 cable, A-type connector to B-type connector, used to connect personal computer to any *C-more* touch panel for setup and programming. (Note: Touch panels require a power source for configuration and operation.)	$23.00

C-more Selection Guide & Specifications

Specification / Model	8" TFT color w/ full features	10" TFT color w/ full features	10" TFT color Widescreen w/ full features
Part Number	EA9-T8CL	EA9-T10CL	EA9-T10WCL
Price	$1,014.00	$1,309.00	$695.00
Display Actual Size and Type	8.4" TFT color	10.4" TFT color	10.1" TFT color
Display Viewing Area	6.71" x 5.03" [170.4 mm x127.8mm]	8.31" x 6.24" [211.2 mm x 158.4 mm]	8.77" x 4.93" [222.7 mm x 125.3 mm]
Weight	2.93 lb [1330g]	4.19 lb [1900g]	2.43 lb [1100g]
Screen Pixel	800 x 600 (SVGA)		1024 x 600 (WSVGA)
Display Brightness	310 nits (typ)	280 nits (typ)	240 nits (typ)
LCD Panel Dot Pitch	0.213 mm x 0.213 mm	0.264 mm x 0.264 mm	0.218 mm x 0.209 mm
Color Scale	65,536 colors		
Backlight Average Lifetime*	50,000 hours @ 25°C		
Touch Panel Type**	Four-wire analog resistive, single touch		
Project Memory	26MB		
Number of Screens	Up to 999 screens – limited by project memory		
Realtime Clock	Realtime Clock Built into panel, backed up for 30 days at 25°C		
Calendar - Month / Day / Year	Yes - monthly deviation 60 sec (Reference)		
Serial Port 1	15-pin D-sub female - RS232C, RS-422/485		
Serial Port 2	3-wire terminal block - RS-485		
Serial Port 3	RJ-12 modular jack - RS-232C		
USB Port - Type B	USB 2.0 High speed (480 Mbps) Type B - Download/Program		
USB Port - Type A	USB 2.0 High speed (480 Mbps) Type A -for USB device options		
Ethernet Port	Ethernet Port Ethernet 10/100 Base-T, auto MDI/MDI-X		
Audio Line Out	3.5 mm mini jack – requires amplifier and speaker(s)		
Mic In (Future)	3.5 mm mini jack		
SD Card Slot	1 slot supports max 2 GB (SD,) max 32 GB (SDHC)		
HDMI Video Out	N/A		
Supply Power	10.2-26.4 VDC Class 2, Use Class2 and SELV (Safety Extra-Low Voltage) Circuit and Limited Energy Circuit (LEC), or use the AC/DC Power Adapter, EA-AC, to power the touch panel from a 100-240 VAC, 50/60 Hz power source. Reverse Polarity Protected		
Power Consumption	18.0 W 1.50 A @ 12VDC 0.75 A @ 24VDC		17.0W 1.42A @ 12 VDC 0.71A @ 24 VDC
Internal Fuse (non-replaceable)	6.3 A		
Altitude	Up to 2000m (6562 ft)		
Operating Temperature	0 to 50 °C (32 to 122 °F) Maximum surrounding air temperature rating: 50°C (122°F) IEC 60068-2-14 (Test Nb, Thermal Shock)		
Storage Temperature	–20 to +60°C (–4 to +140°F) IEC 60068-2-1 (Test Ab, Cold) IEC 60068-2-2 (Test Bb, Dry Heat) IEC 60068-2-14 (Test Na, Thermal Shock)		
Humidity	5–95% RH (non-condensing)		
Environment	For use in Pollution Degree 2 environment, no corrosive gases permitted		
Noise Immunity	(EN61131-2), EN61000-4-2 (ESD), EN61000-4-3 (RFI), EN61000-4-4 (FTB), EN61000-4-5 (Serge), EN61000-4-6 (Conducted) EN61000-4-8 (Power f0requency magnetic field immunity) (Local Test) RFI, (145MHz, 440Mhz 10W @ 10cm), Impulse 1000V @ 1µs pulse		
Withstand Voltage	1000 VAC, 1 min. (FG to Power supply)		
Insulation Resistance	> 10M ohm @ 500VDC (FG to Power supply)		
Vibration	IEC60068-2-6 (Test Fc)		
Shock	IEC60068-2-27 (Test Ea)		
Emission	EN55011 Class A (Radiated RF emission)		
Enclosure	NEMA 250 type 4/4X indoor use only UL50 type 4X indoor use only IP-65 indoor use only (When mounted correctly)		
Agency Approvals	UL508, E157382 CE (EN61131-2), RoHS (2011/65/EU) CUL Canadian C22.2		

NOTES: ****The backlight average lifetime is defined as the average usage time it takes before the brightness becomes 50% of the initial brightness. The lifetime of the backlight depends on the ambient temperature. The lifetime will decrease under low or high temperature usage.***
*****The touchscreen is designed to respond to a single touch. If it is touched at multiple points at the same time, an unexpected object may be activated.***

C-more 8" TFT Color Touch Panel - Full Model

Part No. EA9-T8CL

C-more EA9 series touch screen interface panel, 8-inch color TFT (8.4 inch viewable screen), 64K colors, 800 x 600 pixel SVGA screen resolution, 800MHz CPU, 12-24 VDC powered, NEMA 4/4X, IP65 (when mounted correctly; for indoor use only), non-replaceable LED backlight. Includes (3) serial ports, USB 2.0 Type A and B ports and Ethernet port; supports SD memory card. Compatible with EA9-PGMSW programming software version 5.0 or later.

$1,014.00

Features

- 8.4" diagonal color TFT (Thin Film Transistor) LCD display with 64K colors
- 800 x 600 pixel resolution
- 310 NITS display brightness
- 50,000 hour average backlight half-life
- Analog resistive (1024 X 1024) touch screen allowing unlimited touch areas
- USB port B (program/download) and USB port A (USB device options)
- Ethernet 10/100 Base-T port (program/download & PLC communication)
- Remote Internet Access
- Serial PLC interface (RS-232/422/485)
- One built-in SD memory card slot
- 12–24 VDC powered, 110VAC power adapter (optional)
- Audio Line Out, stereo - requires amplifier and speaker(s)
- 26MB project memory
- Data logging
- 0 to 50°C [32 to 122°F] operating temperature range
- NEMA 4/4X, IP65 compliant when mounted correctly, indoor use only
- Slim design saves panel space
- UL, cUL & CE agency approvals
- 2-year warranty from date of purchase

Function	Available
Ethernet	Yes
USB	Yes
SD Card	Yes
Audio Out	Yes
HDMI Video Out	No

Dimensions

inches / [mm]

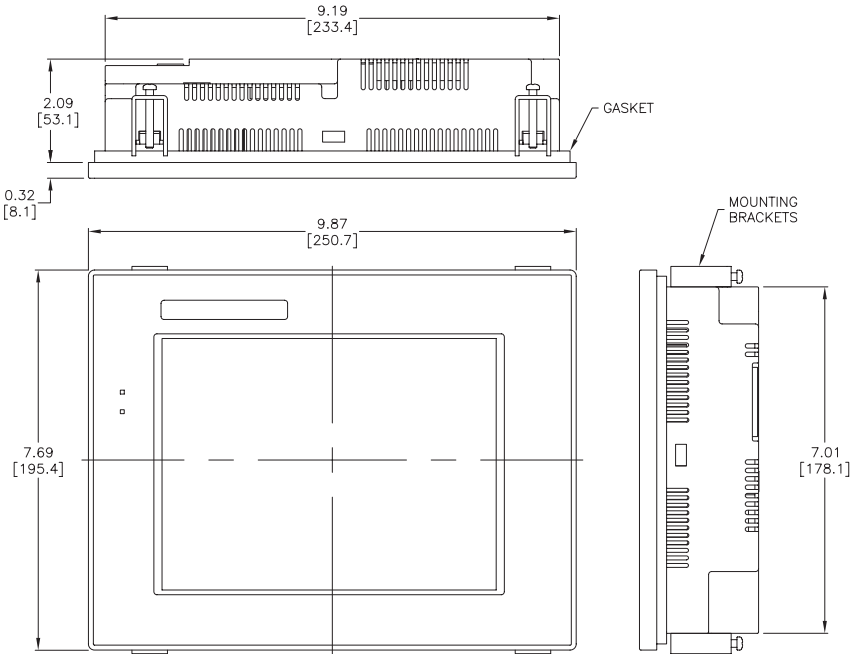

See our Web site www.AutomationDirect.com for complete Engineering drawings.

Mounting Cutout

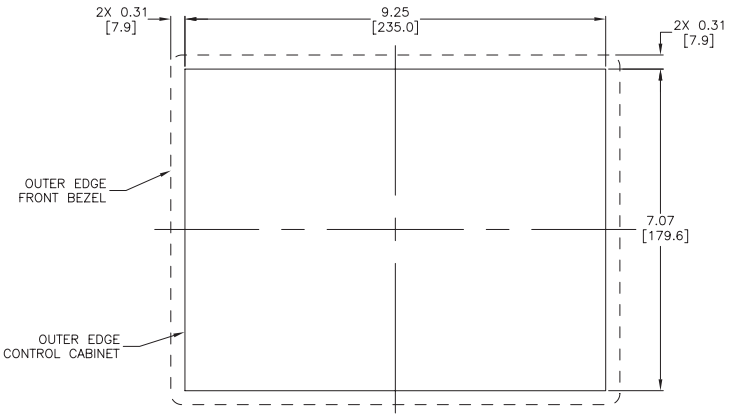

C-more Communication Ports

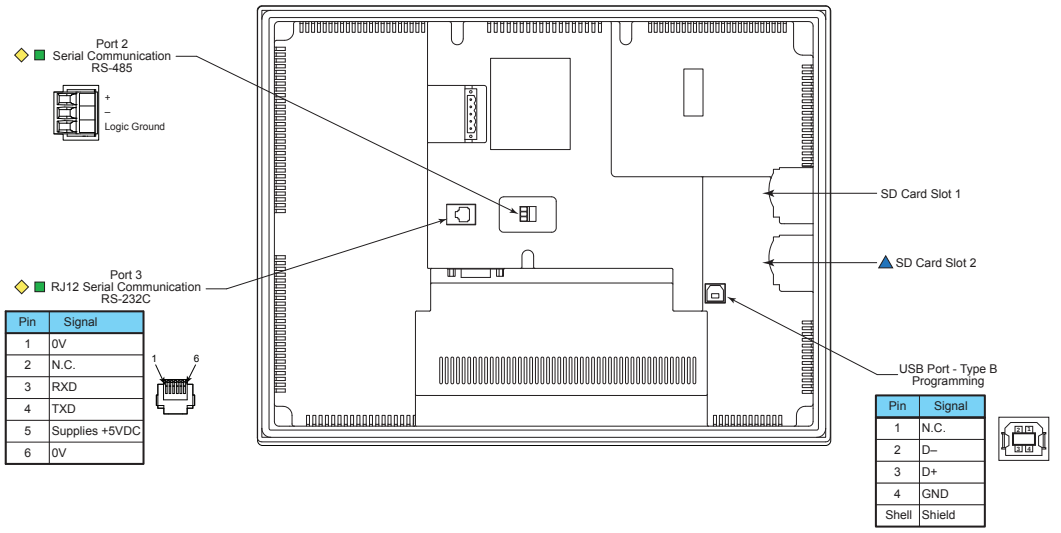

Pin	Signal
1	0V
2	N.C.
3	RXD
4	TXD
5	Supplies +5VDC
6	0V

Pin	Signal
1	N.C.
2	D–
3	D+
4	GND
Shell	Shield

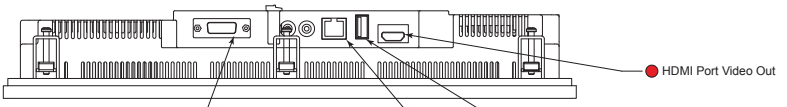

Pin	Signal	Pin	Signal	Pin	Signal
1	Frame GND	6	LE (for DH485)	11	TXD+ (422/485)
2	TXD (232C)	7	CTS (232C)	12	TXD– (422/485)
3	RXD (232C)	8	RTS (232C)	13	Term. Resistor
4	VCC (Supplies +5VDC)	9	RXD+ (422/485)	14	N.C.
5	Logic GND	10	RXD– (422/485)	15	N.C.

Pin	Signal	Pin	Signal
1	TD+	5	do not use
2	TD–	6	RD–
3	RD+	7	N.C.
4	do not use	8	N.C.

Pin	Signal
1	Vbus
2	D–
3	D+
4	GND
SHELL	Shield

Link Status LED (Green)	
On	Ethernet Linked
Off	No Ethernet Comm.
Blinking Green	Comm. Activity

Network Speed LED (Yellow)	
On	100M
Off	10M

◇ Note: Device is not available on Base Feature touch panel EA9-T6CL-R

■ Note: Device is not available on Base Feature touch panels EA9-T7CL-R and EA9-T15CL-R

● Note: Device is only available on touch panels EA9-T12CL and EA9-T15CL.

▲ Note: Device is only available on touch panels EA9-T12CL, EA9-T15CL and EA9-T15CL-R.

Ethernet Port

The Ethernet port has several uses:

- Download program to panel
- Communicate to PLCs/PCs
- Send e-mail
- Access FTP server
- Act as a Web server
- Remote Internet Access

The Ethernet port has an RJ-45 8-wire modular connector with green and yellow LEDs.

- The yellow LED indicates network speed; off for a 10 Mbps connection and illuminated for a 100 Mbps connection.
- The green LED indicates link status and illuminates when a link is established.

Note: EA6-T6CL-R does not include an Ethernet port, and does not have these capabilities.

USB Port B

Program *C-more* via the USB programming port. It's fast and easy, with no baud rate settings, parity, or stop bits to worry about. We stock standard USB cables for your convenience. USB Port B can be used to upload or download projects to and from a PC.

USB Port A

The Universal Serial Bus (USB) Port A is a standard feature for all models and can be used to connect various USB HID (Human Input Device) devices to the panel, such as:

- USB pen drives, (USB-FLASH)
- USB keyboards
- USB barcode scanners
- USB card scanners

C-more can log data to the USB pen drive as well as load projects to the panel from the pen drive. You can also back up project files and panel firmware.

Sound Interface (Audio Line Out)

When attached to an amplifier and speaker(s), *C-more* can play warning sounds or pre-recorded messages such as: "conveyor is jammed". *C-more* supports WAV type files. The output is stereo.

Serial Port

Port 1 - Connect to your serial controller network via Port 1. Port 1 is a 15-pin port that supports RS-232 or RS-422/485.

Port 2 - Connect your RS-485 network via Port 2. Port 2 is provided with a 3-wire removable terminal block.

Port 3 - Connect to your RS-232C device via Port 3. Port 3 is an RJ12 connection.

HDMI Video Out

EA9-T12CL and EA9-T15CL include an HDMI Type A port to provide video output to a projector or remote monitor.

C-more Power Connection Wiring

Providing Power to the Touch Panel

- Connect a dedicated 12–24 VDC Class 2 power supply to the DC connector on the rear of the ***C-more*** touch panel. Connect the ground terminal to a proper equipment ground.
- or, install a ***C-more*** AC Power Adapter (EA-AC) to the rear of the touch panel and connect an AC voltage source of 100-240 VAC, 50/60 Hz, to its AC connector.
- then, turn on the power source and check the LED status indicators on the front and rear of the ***C-more*** touch panel for proper operation.

DC Wiring

Recommended DC Supply Fuse		
Panel Size	Rating	ADC p/n
6" – 10"	2.5 A	MDL2-5
12" & 15"	4.0 A	MDL4

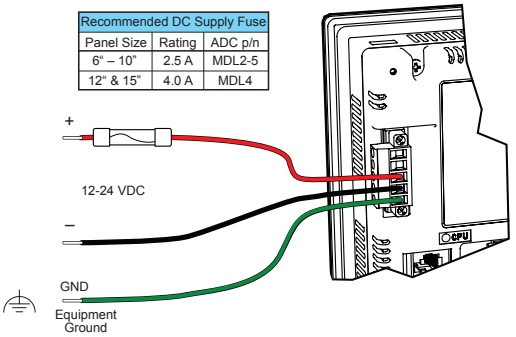

Recommended Power Supply:
AutomationDirect Part No. PSC-24-060

DC-CON Tightening Torque	
Power connector screw torque	70.4 oz-in [0.5 Nm]
Power connector mounting torque	56 oz-in [0.4 Nm]

AC Wiring

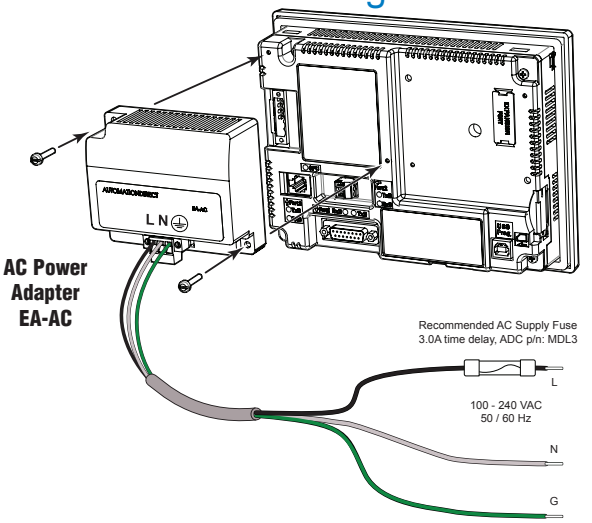

EA-AC Tightening Torque	
Power supply cable torque	71 - 85 oz-in [0.5 - 0.6 Nm]
Power connector mounting torque	71 - 85 oz-in [0.5 - 0.6 Nm]
Mounting flange screw torque	57 - 71 oz-in [0.4 - 0.5 Nm]

Power LED (Green)	
On	Power On
Off	Power Off

User Defined LED (Green, Orange & Red)	
Off	User Defined (Refer to online help file for further details)
Green	
Red	
Orange	
Blinking Red	
Blinking Orange	
Blinking Green	

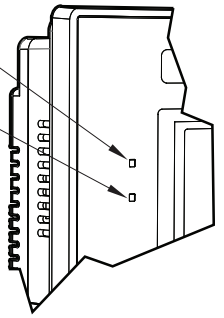

Front View

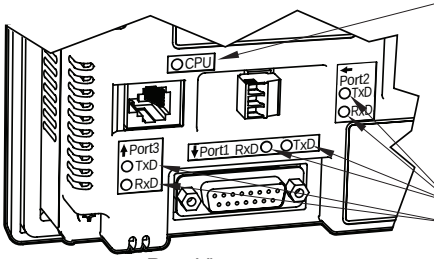

Rear View

CPU Status LED (Green, Orange & Red)	
Off	Power Off
Green	Normal – CPU Run State
Red	Memory Error
Blinking Red	Watchdog Timer Error
Blinking Orange	OS Error
Blinking Green	Power Loss Detection

Serial TxD/RxD LED (Green)	
On	Comm. is active
Off	No communication

WARNING: To minimize the risk of potential safety problems, you should follow all applicable local and national codes that regulate the installation and operation of your equipment. These codes vary from area to area and it is your responsibility to determine which codes should be followed, and to verify that the equipment, installation, and operation are in compliance with the latest revision of these codes.

Equipment damage or serious injury to personnel can result from the failure to follow all applicable codes and standards. We do not guarantee the products described in this publication are suitable for your particular application, nor do we assume any responsibility for your product design, installation, or operation.

If you have any questions concerning the installation or operation of this equipment, or if you need additional information, please call us at 1-800-633-0405 or 770-844-4200.

This publication is based on information that was available at the time it was printed.

At Automationdirect.com® we constantly strive to improve our products and services, so we reserve the right to make changes to the products and/or publications at any time without notice and without obligation. This publication may also discuss features that may not be available in certain revisions of the product.

DC Input Modules

P2-16ND3-1 (cont'd)

Removable Terminal Block Specifications		
Part Number	**P2-RTB**	**P2-RTB-1**
Number of Positions	18 Screw Terminals	18 Spring Clamp Terminals
Wire Range	30–16 AWG (0.051–1.31 mm²) Solid / Stranded conductor 3/64 in (1.2 mm) Insulation maximum 1/4 in (6–7 mm) Strip length	28–16 AWG (0.081–1.31 mm²) Solid / Stranded conductor 3/64 in (1.2 mm) Insulation maximum 19/64 in (7–8 mm) Strip length
Conductors	"USE COPPER CONDUCTORS, 75°C" or Equivalent.	
Screw Driver Width	1/8 inch (3.8 mm) Maximum	
Screw Size	M2	N/A
Screw Torque	2.5 lb·in (0.28 N·m)	N/A

Wiring Diagrams

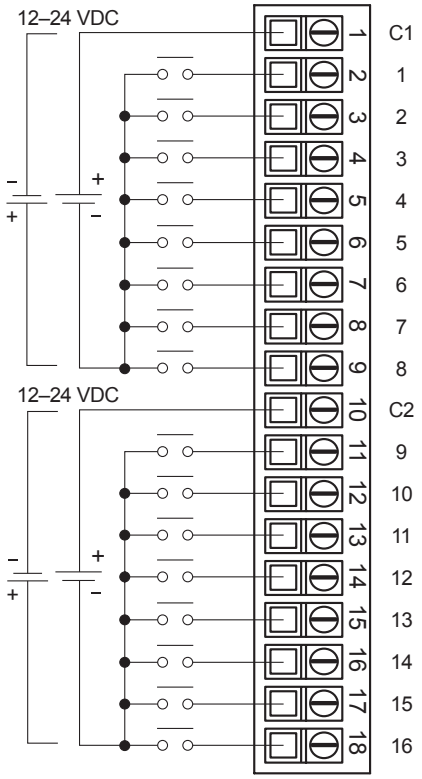

Equivalent Input Circuit

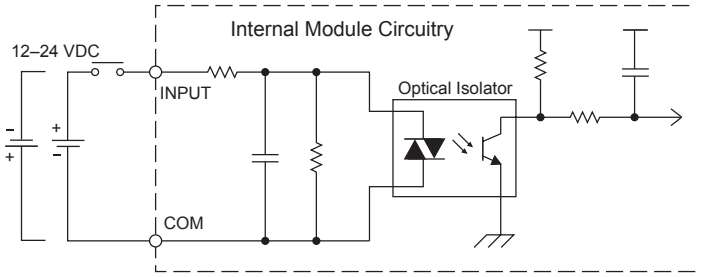

Relay Output Modules

P2-16TR (cont'd)

Removable Terminal Block Specifications

Part Number	P2-RTB	P2-RTB-1
Number of Positions	18 Screw Terminals	18 Spring Clamp Terminals
Wire Range	30–16 AWG (0.051–1.31 mm²) Solid / Stranded Conductor 3/64 in (1.2 mm) Insulation Maximum 1/4 in (6–7 mm) Strip Length	28–16 AWG (0.081–1.31 mm²) Solid / Stranded Conductor 3/64 in (1.2 mm) Insulation Maximum 19/64 in (7–8 mm) Strip Length
Conductors	"USE COPPER CONDUCTORS, 75°C" or Equivalent.	
Screw Driver Width	1/8 inch (3.8 mm) Maximum	
Screw Size	M2	N/A
Screw Torque	2.5 lb·in (0.28 N·m)	N/A

Wiring Diagrams

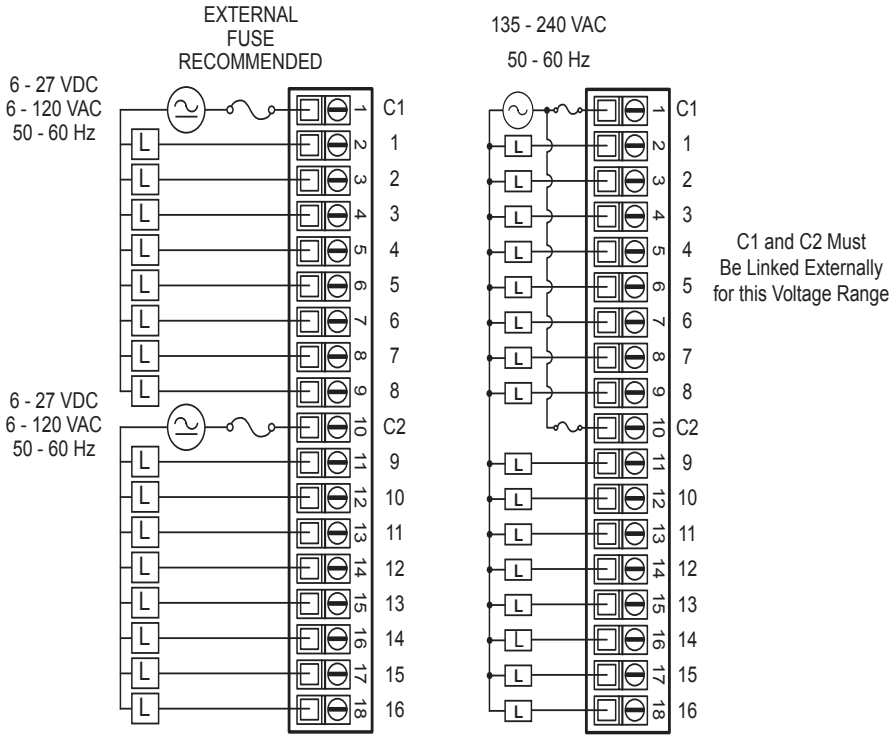

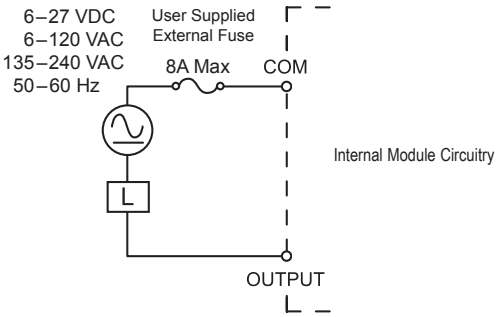

Product data sheet
Characteristics

LC1D09G7
TeSys D IEC contactor, 9 A, 3 P, 5 HP at 480 VAC, nonreversing, 120 VAC 50/60 Hz coil

Product availability : Stock - Normally stocked in distribution facility

Price** : 94.00 USD

Main

Range	TeSys
Product name	TeSys D
Product or component type	Contactor
Device short name	LC1D
Contactor application	Resistive load Motor control
Utilisation category	AC-1 AC-4 AC-3
Poles description	3P
Power pole contact composition	3 NO
System Voltage	<= 300 V DC power circuit <= 690 V AC 25...400 Hz power circuit
[Ie] rated operational current	25 A (<= 140 °F (60 °C)) at <= 440 V AC AC-1 power circuit 9 A (<= 140 °F (60 °C)) at <= 440 V AC AC-3 power circuit
Motor power kW	2.2 kW at 400 V AC 50/60 Hz AC-4 2.2 kW at 220...230 V AC 50/60 Hz AC-3 4 kW at 380...400 V AC 50/60 Hz AC-3 5.5 kW at 500 V AC 50/60 Hz AC-3 5.5 kW at 660...690 V AC 50/60 Hz AC-3 4 kW at 415...440 V AC 50/60 Hz AC-3
Motor power HP (UL / CSA)	0.33 hp at 115 V AC 50/60 Hz 1 phase motors 1 hp at 230/240 V AC 50/60 Hz 1 phase motors 2 hp at 200/208 V AC 50/60 Hz 3 phases motors 2 hp at 230/240 V AC 50/60 Hz 3 phases motors 5 hp at 460/480 V AC 50/60 Hz 3 phases motors 7.5 hp at 575/600 V AC 50/60 Hz 3 phases motors
Control circuit type	AC 50/60 Hz
[Uc] control circuit voltage	120 V AC 50/60 Hz
Auxiliary contact composition	1 NO + 1 NC
[Uimp] rated impulse withstand voltage	6 kV conforming to IEC 60947

Disclaimer: This documentation is not intended as a substitute for and is not to be used for determining suitability or reliability of these products for specific user applications

Overvoltage category	III
[Ith] conventional free air thermal current	25 A at <= 140 °F (60 °C) power circuit 10 A at <= 140 °F (60 °C) signalling circuit
Irms rated making capacity	250 A at 440 V power circuit conforming to IEC 60947 140 A AC signalling circuit conforming to IEC 60947-5-1 250 A DC signalling circuit conforming to IEC 60947-5-1
Rated breaking capacity	250 A at 440 V power circuit conforming to IEC 60947
[Icw] rated short-time withstand current	105 A <= 104 °F (40 °C) 10 s power circuit 210 A <= 104 °F (40 °C) 1 s power circuit 30 A <= 104 °F (40 °C) 10 min power circuit 61 A <= 104 °F (40 °C) 1 min power circuit 100 A 1 s signalling circuit 120 A 500 ms signalling circuit 140 A 100 ms signalling circuit
Associated fuse rating	20 A gG at <= 690 V coordination type 2 power circuit 25 A gG at <= 690 V coordination type 1 power circuit 10 A gG signalling circuit conforming to IEC 60947-5-1
Average impedance	2.5 mOhm at 50 Hz - Ith 25 A power circuit
[Ui] rated insulation voltage	600 V power circuit certifications CSA 600 V power circuit certifications UL 690 V power circuit conforming to IEC 60947-4-1 690 V signalling circuit conforming to IEC 60947-1 600 V signalling circuit certifications CSA 600 V signalling circuit certifications UL
Electrical durability	0.6 Mcycles 25 A AC-1 at Ue <= 440 V 2 Mcycles 9 A AC-3 at Ue <= 440 V
Power dissipation per pole	0.2 W AC-3 1.56 W AC-1
Safety cover	With
Mounting support	Plate Rail
Standards	CSA C22.2 No 14 EN 60947-4-1 EN 60947-5-1 IEC 60947-4-1 IEC 60947-5-1 UL 508
Product certifications	BV GL CCC UL DNV GOST CSA RINA LROS (Lloyds register of shipping)
Connections - terminals	Control circuit: screw clamp terminals 2 cable(s) 0...0 in² (1...2.5 mm²) - cable stiffness: flexible - with cable end Power circuit: screw clamp terminals 1 cable(s) 0...0.01 in² (1...4 mm²) - cable stiffness: flexible - with cable end Control circuit: screw clamp terminals 1 cable(s) 0...0.01 in² (1...4 mm²) - cable stiffness: flexible - without cable end Control circuit: screw clamp terminals 2 cable(s) 0...0.01 in² (1...4 mm²) - cable stiffness: flexible - without cable end Control circuit: screw clamp terminals 1 cable(s) 0...0.01 in² (1...4 mm²) - cable stiffness: flexible - with cable end Control circuit: screw clamp terminals 1 cable(s) 0...0.01 in² (1...4 mm²) - cable stiffness: solid - without cable end Control circuit: screw clamp terminals 2 cable(s) 0...0.01 in² (1...4 mm²) - cable stiffness: solid - without cable end Power circuit: screw clamp terminals 1 cable(s) 0...0.01 in² (1...4 mm²) - cable stiffness: flexible - without cable end Power circuit: screw clamp terminals 2 cable(s) 0...0.01 in² (1...4 mm²) - cable stiffness: flexible - without cable end Power circuit: screw clamp terminals 2 cable(s) 0...0 in² (1...2.5 mm²) - cable stiffness: flexible - with cable end Power circuit: screw clamp terminals 1 cable(s) 0...0.01 in² (1...4 mm²) - cable stiffness: solid - without cable end

	Power circuit: screw clamp terminals 2 cable(s) 0...0.01 in² (1...4 mm²) - cable stiffness: solid - without cable end
Tightening torque	Power circuit: 15.04 lbf.in (1.7 N.m) - on screw clamp terminals - with screwdriver flat Ø 6 mm Power circuit: 15.04 lbf.in (1.7 N.m) - on screw clamp terminals - with screwdriver Philips No 2 Control circuit: 15.04 lbf.in (1.7 N.m) - on screw clamp terminals - with screwdriver flat Ø 6 mm Control circuit: 15.04 lbf.in (1.7 N.m) - on screw clamp terminals - with screwdriver Philips No 2
Operating time	4...19 ms opening 12...22 ms closing
Safety reliability level	B10d = 1369863 cycles contactor with nominal load conforming to EN/ISO 13849-1 B10d = 20000000 cycles contactor with mechanical load conforming to EN/ISO 13849-1
Mechanical durability	15 Mcycles
Operating rate	3600 cyc/h at <= 140 °F (60 °C)

Complementary

Coil technology	Without built-in suppressor module
Control circuit voltage limits	0.3...0.6 Uc drop-out at 140 °F (60 °C), AC 50/60 Hz 0.8...1.1 Uc operational at 140 °F (60 °C), AC 50 Hz 0.85...1.1 Uc operational at 140 °F (60 °C), AC 60 Hz
Inrush power in VA	70 VA at 68 °F (20 °C) (cos ϕ 0.75) 60 Hz 70 VA at 68 °F (20 °C) (cos ϕ 0.75) 50 Hz
Hold-in power consumption in VA	7.5 VA at 68 °F (20 °C) (cos ϕ 0.3) 60 Hz 7 VA at 68 °F (20 °C) (cos ϕ 0.3) 50 Hz
Heat dissipation	2...3 W at 50/60 Hz
Auxiliary contacts type	Type mechanically linked (1 NO + 1 NC) conforming to IEC 60947-5-1 Type mirror contact (1 NC) conforming to IEC 60947-4-1
Signalling circuit frequency	25...400 Hz
Minimum switching current	5 mA signalling circuit
Minimum switching voltage	17 V signalling circuit
Non-overlap time	1.5 ms on energisation between NC and NO contact 1.5 ms on de-energisation between NC and NO contact
Insulation resistance	> 10 MOhm signalling circuit

Environment

IP degree of protection	IP20 front face conforming to IEC 60529
Protective treatment	TH conforming to IEC 60068-2-30
Pollution degree	3
Ambient air temperature for operation	23...140 °F (-5...60 °C)
Ambient air temperature for storage	-76...176 °F (-60...80 °C)
Permissible ambient air temperature around the device	-40...158 °F (-40...70 °C) at Uc
Operating altitude	9842.52 ft (3000 m) without derating
Fire resistance	1562 °F (850 °C) conforming to IEC 60695-2-1
Flame retardance	V1 conforming to UL 94
Mechanical robustness	Vibrations contactor open 2 Gn, 5...300 Hz Vibrations contactor closed 4 Gn, 5...300 Hz Shocks contactor open 10 Gn for 11 ms Shocks contactor closed 15 Gn for 11 ms
Height	3.03 in (77 mm)
Width	1.77 in (45 mm)
Depth	3.39 in (86 mm)
Product weight	0.71 lb(US) (0.32 kg)

Ordering and shipping details

Category	22354 - CTR,TESYS D,OPEN,9-38A AC
Discount Schedule	I12
GTIN	00785901206958
Nbr. of units in pkg.	1

Product data sheet
Characteristics

LRD07
TeSys LRD, thermal overload relay, 1.6 to 2.5 A, class 10A

Product availability : Stock - Normally stocked in distribution facility

Price** : 60.00 USD

Main

Range	TeSys
Product name	TeSys LRD
Product or component type	Differential thermal overload relay
Device short name	LRD
Relay application	Motor protection
Product compatibility	LC1D09 LC1D25 LC1D18 LC1D32 LC1D38 LC1D12
Network type	DC AC
Thermal protection adjustment range	1.6...2.5 A
[Ui] rated insulation voltage	600 V power circuit conforming to CSA 600 V power circuit conforming to UL 690 V power circuit conforming to IEC 60947-4-1

Complementary

Network frequency	0...400 Hz
Mounting support	Plate with specific accessories Rail with specific accessories Under contactor
Tripping threshold	1.14 +/- 0.06 Ir conforming to IEC 60947-4-1
[Ith] conventional free air thermal current	5 A for signalling circuit
Permissible current	3 A at 120 V AC-15 for signalling circuit 0.22 A at 125 V DC-13 for signalling circuit
System Voltage	690 V AC 0...400 Hz

Disclaimer: This documentation is not intended as a substitute for and is not to be used for determining suitability or reliability of these products for specific user applications

[Uimp] rated impulse withstand voltage	6 kV
Phase failure sensitivity	Tripping current 130 % of Ir on two phase, the last one at 0
Control type	Red push-button stop Blue push-button for reset mode
Temperature compensation	-4...140 °F (-20...60 °C)
Connections - terminals	Control circuit : screw clamp terminals 2 cable(s) 1...2.5 mm² flexible without cable end Control circuit : screw clamp terminals 2 cable(s) 1...2.5 mm² flexible with cable end Control circuit : screw clamp terminals 2 cable(s) 1...2.5 mm² solid without cable end Power circuit : screw clamp terminals 1 cable(s) 1.5...10 mm² flexible without cable end Power circuit : screw clamp terminals 1 cable(s) 1...4 mm² flexible with cable end Power circuit : screw clamp terminals 1 cable(s) 1...6 mm² solid without cable end
Tightening torque	Control circuit : 1.7 N.m on screw clamp terminals Power circuit : 1.7 N.m on screw clamp terminals
Width	1.77 in (45 mm)
Depth	2.76 in (70 mm)
Product weight	0.27 lb(US) (0.124 kg)

Environment

Protective treatment	TH conforming to IEC 60068
IP degree of protection	IP20 conforming to IEC 60529
Ambient air temperature for operation	-4...140 °F (-20...60 °C) without derating conforming to IEC 60947-4-1
Ambient air temperature for storage	-76...158 °F (-60...70 °C)
Flame retardance	V1 conforming to UL 94
Mechanical robustness	Vibrations 6 Gn IEC 60068-2-6 Shocks 15 Gn for 11 ms IEC 60068-2-7
Dielectric strength	6 kV at 50 Hz conforming to IEC 60255-5
Standards	IEC 60947-4-1 EN 60947-4-1 IEC 60947-5-1 EN 60947-5-1 CSA C22.2 No 14 UL 508 ATEX D 94/9/CE
Product certifications	BV UL GL RINA LROS (Lloyds register of shipping) GOST CCC DNV ATEX INERIS CSA

Ordering and shipping details

Category	22347 - CONTACTOR,D-LINE,OVERLOADS-NEW
Discount Schedule	I12
GTIN	00785901206743
Nbr. of units in pkg.	1
Package weight(Lbs)	0.32000000000000001
Returnability	Y
Country of origin	FR

Offer Sustainability

Sustainable offer status	Green Premium product
RoHS (date code: YYWW)	Compliant - since 0631 - Schneider Electric declaration of conformity Schneider Electric declaration of conformity
REACh	Reference not containing SVHC above the threshold Reference not containing SVHC above the threshold

Product data sheet
Characteristics

ZB5AS844
Harmony, 22mm Push Button, emergency stop head, trigger and latching turn release, red, 40 mm mushroom, unmarked

Product availability : Stock - Normally stocked in distribution facility

Price** : 92.50 USD

Main

Range of product	Harmony XB5
Product or component type	Head
Product destination	Emergency stop push-button
Device short name	ZB5
Bezel material	Plastic
Head type	Standard
Mounting diameter	0.87 in (22 mm)
Sale per indivisible quantity	1
Shape of signaling unit head	Round
Type of operator	Trigger action and mechanical latching
Reset	Turn to release
Operator profile	Red mushroom Ø 40 mm unmarked

Complementary

CAD overall width	1.57 in (40 mm)
CAD overall height	1.57 in (40 mm)
CAD overall depth	2.24 in (57 mm)
Product weight	0.1 lb(US) (0.046 kg)
Mechanical durability	300000 cycles
Station name	XALD 1 cut-out XALK 1 cut-out
Electrical composition code	C15 1 contacts using single blocks in front mounting C11 3 contacts using single blocks in front mounting SF1 3 contacts using single blocks in front mounting C7 4 contacts using single blocks in front mounting C8 4 contacts using single and double blocks in front mounting

Disclaimer: This documentation is not intended as a substitute for and is not to be used for determining suitability or reliability of these products for specific user applications

	C10 4 contacts using single and double blocks in front mounting SR1 3 contacts using single blocks in rear mounting

Environment

Protective treatment	TH
Ambient air temperature for storage	-40...158 °F (-40...70 °C)
Ambient air temperature for operation	-40...158 °F (-40...70 °C)
Overvoltage category	Class II conforming to IEC 60536
IP degree of protection	IP69 IP67 IP66 conforming to IEC 60529 IP69K
NEMA degree of protection	NEMA 13 NEMA 4X
Resistance to high pressure washer	1015.26 psi (7000000 Pa) at 131 °F (55 °C),distance: 0.1 m
IK degree of protection	IK03 conforming to IEC 50102
Standards	EN/IEC 60204-1 EN/IEC 60947-1 EN/IEC 60947-5-1 EN/IEC 60947-5-4 EN/IEC 60947-5-5 EN/ISO 13850 IEC 60364-5-53 JIS C 4520 UL 508 GB 14048.5 CSA C22.2 No 14
Product certifications	BV CSA DNV GL LROS (Lloyds register of shipping) RINA UL listed
Vibration resistance	5 gn (f = 2...500 Hz) conforming to IEC 60068-2-6
Shock resistance	30 gn (duration = 18 ms) half sine wave acceleration conforming to IEC 60068-2-27 50 gn (duration = 11 ms) half sine wave acceleration conforming to IEC 60068-2-27

Ordering and shipping details

Category	22467 - PUSHBUTTONS,22MM(PLASTIC) NEW
Discount Schedule	CS2
GTIN	00785901376682
Nbr. of units in pkg.	1
Package weight(Lbs)	8.9999999999999997E-2
Returnability	Y
Country of origin	CZ

Offer Sustainability

Sustainable offer status	Green Premium product
RoHS (date code: YYWW)	Compliant - since 0627 - Schneider Electric declaration of conformity Schneider Electric declaration of conformity
REACh	Reference not containing SVHC above the threshold Reference not containing SVHC above the threshold
Product environmental profile	Available
Product end of life instructions	Available
California proposition 65	WARNING: This product can expose you to chemicals including:
- - - - - - - Substance 1	Nickel compounds, which is known to the State of California to cause cancer, and
- - - - - - - Substance 2	Di-isodecyl phthalate (DIDP), which is known to the State of California to cause birth defects or other reproductive harm.

- - - - - - - More information	For more information go to www.p65warnings.ca.gov

Contractual warranty

Warranty period	18 months

ZB5AS844

Dimensions

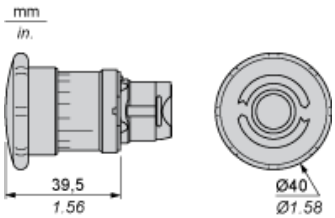

Panel Cut-out for Pushbuttons, Switches and Pilot Lights (Finished Holes, Ready for Installation)

Connection by Screw Clamp Terminals or Plug-in Connectors or on Printed Circuit Board

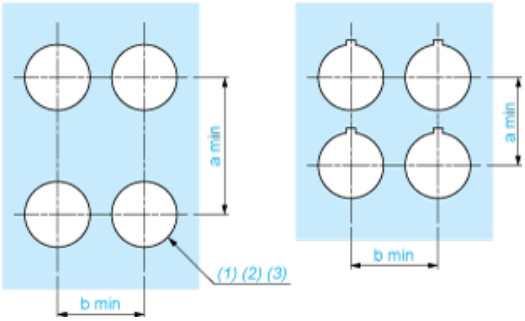

(1) Diameter on finished panel or support
(2) For selector switches and Emergency stop buttons, use of an anti-rotation plate type ZB5AZ902 is recommended.
(3) Ø22.3 mm recommended (Ø22.3 $_{0}^{+0.4}$) / Ø0.89 in. recommended (Ø0.88 in. $_{0}^{+0.016}$)

Connections	a in mm	a in in.	b in mm	b in in.
By screw clamp terminals or plug-in connector	40	1.57	30	1.18
By Faston connectors	45	1.77	32	1.26
On printed circuit board	30	1.18	30	1.18

Detail of Lug Recess

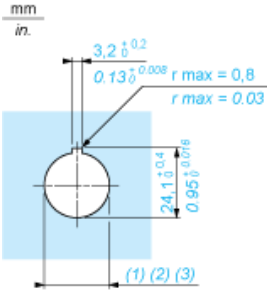

(1) Diameter on finished panel or support
(2) For selector switches and Emergency stop buttons, use of an anti-rotation plate type ZB5AZ902 is recommended.
(3) Ø22.5 mm recommended (Ø22.3 $_{0}^{+0.4}$) / Ø0.89 in. recommended (Ø0.88 in. $_{0}^{+0.016}$)

Pushbuttons, Switches and Pilot Lights for Printed Circuit Board Connection

Panel Cut-outs (Viewed from Installer's Side)

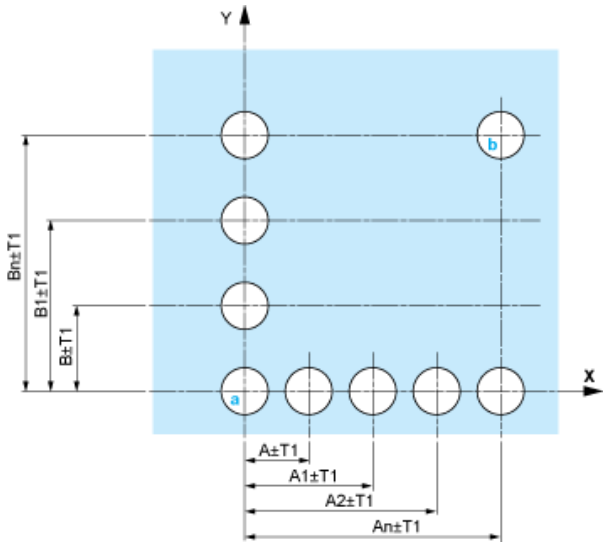

A: 30 mm min. / 1.18 in. min.
B: 40 mm min. / 1.57 in. min.

Printed Circuit Board Cut-outs (Viewed from Electrical Block Side)

Dimensions in mm

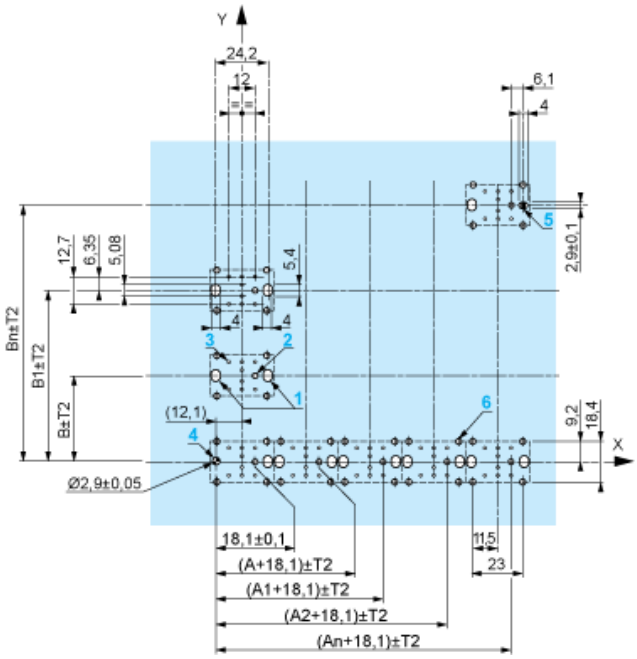

A: 30 mm min.
B: 40 mm min.

Dimensions in in.

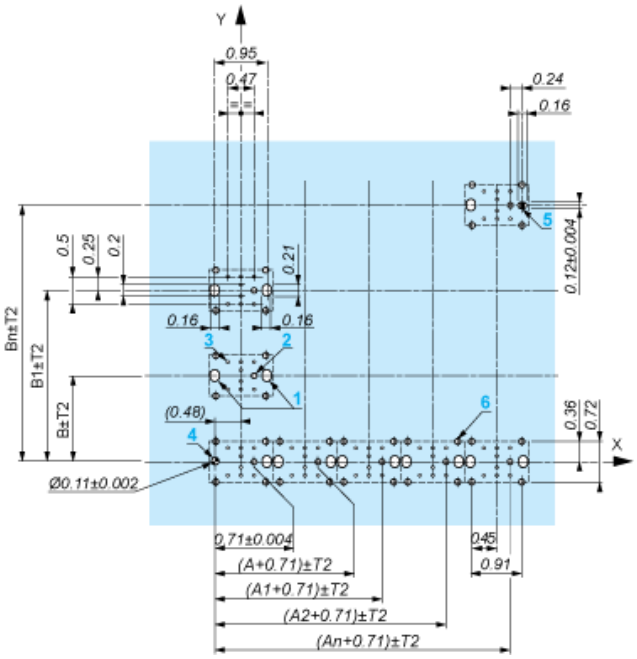

A: 1.18 in. min.
B: 1.57 in. min.

General Tolerances of the Panel and Printed Circuit Board

The cumulative tolerance must not exceed 0.3 mm / 0.012 in.: T1 + T2 = 0.3 mm max.

Installation Precautions

- Minimum thickness of circuit board: 1.6 mm / 0.06 in.
- Cut-out diameter: 22.4 mm ± 0.1 / 0.88 in. ± 0.004
- Orientation of body/fixing collar ZB5AZ009: ± 2°30' (excluding cut-outs marked a and b).
- Tightening torque of screws ZBZ006: 0.6 N.m (5.3 lbf.in) max.
- Allow for one ZB5AZ079 fixing collar/pillar and its fixing screws:
  - every 90 mm / 3.54 in. horizontally (X), and 120 mm / 4.72 in. vertically (Y).
  - with each selector switch head (ZB5AD•, ZB5AJ•, ZB5AG•).

The fixing centers marked a and b are diagonally opposed and must align with those marked 4 and 5.

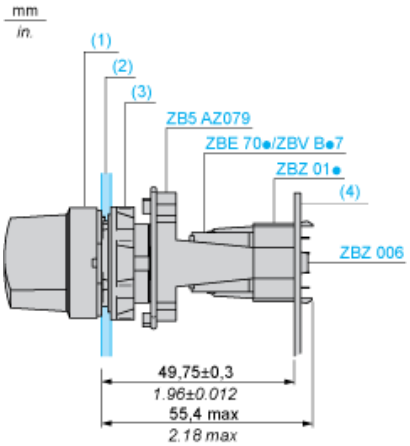

(1) Head ZB5AD•
(2) Panel
(2) Nut
(4) Printed circuit board

Mounting of Adapter (Socket) ZBZ01•

- 1 2 elongated holes for ZBZ006 screw access
- 2 1 hole Ø 2.4 mm ± 0.05 / 0.09 in. ± 0.002 for centring adapter ZBZ01•
- 3 8 × Ø 1.2 mm / 0.05 in. holes
- 4 1 hole Ø 2.9 mm ± 0.05 / 0.11 in. ± 0.002, for aligning the printed circuit board (with cut-out marked a)
- 5 1 elongated hole for aligning the printed circuit board (with cut-out marked b)
- 6 4 holes Ø 2.4 mm / 0.09 in. for clipping in adapter ZBZ01•

Dimensions An + 18.1 relate to the Ø 2.4 mm ± 0.05 / 0.09 in. ± 0.002 holes for centring adapter ZBZ01•.

Electrical Composition Corresponding to Code C7

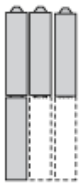

Electrical Compositions Corresponding to Code C8

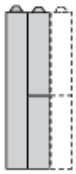

Electrical Compositions Corresponding to Code C10

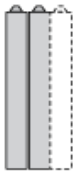

Electrical Composition Corresponding to Codes C9, C11, SF1 and SR1

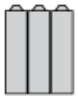

Electrical Composition Corresponding to Code C15

1 N/O

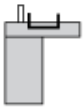

1 N/C

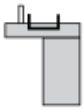

1 N/O + N/C or 1 N/O + N/O or 1 N/C + N/C

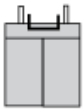

Legend

Single contact

Double contact

Light block

Possible location

APPENDIX D

HEALTH AND SAFETY PLAN (HASP) & COMMUNITY AIR MONITORING PROGRAM (CAMP)

NEW 470 PROJECT

12 ECKFORD STREET

BROOKLYN, KINGS COUNTY, NEW YORK

Health and Safety Plan

AKRF Project Number: 12306
NYSDEC BCP Site Number: C224242

Prepared for:

New York State Department of Environmental Conservation
Remedial Bureau B
625 Broadway
Albany, New York 12233

Prepared on Behalf of:

New 470 LLC
58 Vanderbilt Motor Parkway, Suite 100
Commack, New York 11725

Prepared by:

AKRF, Inc.
440 Park Avenue South, 7th Floor
New York, New York 10016
(212) 696-0670

DECEMBER 2019

TABLE OF CONTENTS

1.0 INTRODUCTION 1
1.1 Purpose 1
1.2 Scope 2
1.3 Application 2
2.0 PROJECT ORGANIZATION AND RESPONSIBILITIES 3
2.1 Project Director 3
2.2 Site Manager (SM) 3
2.3 Project Environmental and Safety Manager (PESM) 3
2.4 Site Supervisor (SS) 4
2.5 Site Personnel 4
3.0 SITE HISTORY AND BACKGROUND 5
4.0 POTENTIAL HAZARDS AT THE SITE 7
4.1 Hazard Potential 7
4.2 Properties of Chemical Contamination 7
4.2.1 Chemical Hazards in Soil/Fill, Groundwater, and/or Soil Vapor 7
4.2.2 Other Chemical Hazards 8
4.3 Physical Hazards 8
4.3.1 Cold Stress 9
4.3.2 Heat Stress 9
4.3.3 Noise 9
4.3.4 Hand and Power Tools 9
4.3.5 Slips, Trips, and Falls 9
4.3.6 Fire and Explosion 9
4.3.7 Manual Lifting 9
4.3.8 Utilities (Electrocution and Fire Hazards) 10
4.4 Task Hazard Analysis 10
5.0 PROCESS SAFETY MANAGEMENT 10
6.0 PERSONAL PROTECTIVE EQUIPMENT (PPE) 11
6.1 OSHA Requirements for PPE 12
7.0 Air MONITORING 12
7.1 Monitoring Requirements 12
7.1.1 Work Zone Monitoring 12
8.0 ZONES, PROTECTION, AND COMMUNICATION 13
8.1 Site Control 13
8.2 Contamination Control 14
8.2.1 Personnel Decontamination Station 14
8.2.2 Minimization of Contact With Contaminants 14
8.2.3 Personnel Decontamination Sequence 14
8.2.4 Emergency Decontamination 14
8.2.5 Heavy Equipment Decontamination 15
8.3 Communications 15
9.0 MEDICAL SURVEILLANCE PROCEDURES 16
9.1 Medical Surveillance Requirements 16
10.0 SAFETY CONSIDERATIONS 16
10.1 Excavation and Trenching 16
11.0 DISPOSAL PROCEDURES 17
12.0 EMERGENCY RESPONSE/CONTINGENCY PLAN 17

12.1 Responsibilities 17
12.1.1 Project Environmental and Safety Manager (PESM) 17
12.1.2 Site Manager (SM) 17
12.1.3 Emergency Coordinator (EC) 17
12.1.4 Site Personnel 18
12.2 Communications 18
12.2.1 Telephone Communications 18
12.2.2 Hand Signals 18
12.3 Pre-Emergency Planning 18
12.4 Emergency Medical Treatment 18
12.5 Emergency Site Evacuation Routes and Procedures 19
12.6 Fire Prevention and Protection 19
12.7 Overt Chemical Exposure 20
12.8 Personal Injury 20
12.9 Decontamination During Medical Emergencies 20
12.10 Accident/Incident Reporting 21
12.11 Spill Control and Response 21
12.12 Emergency Equipment 21
12.13 Postings 22
12.14 Restoration and Salvage 22
12.15 Hospital Directions 22
12.16 Emergency Contacts 23
13.0 TRAINING 23
13.1 General Health and Safety Training 23
13.2 Annual Eight-Hour Refresher Training 23
13.3 Supervisor Training 23
13.4 Site-Specific Training 23
13.5 On-Site Safety Briefings 24
14.0 LOGS, REPORTS, AND RECORD KEEPING 24
14.1 Medical and Training Records 24
14.2 On-Site Log 24
14.3 Exposure Records 24
14.4 Accident/Incident Reports 25
14.5 Hazard Communication Program/Material Safety Data Sheets (MSDS) 25
14.6 Work Permits 25
15.0 FIELD PERSONNEL REVIEW 26

FIGURES

Figure 1 – Hospital Route Map

TABLES

Table 1 – Potential Health Effects from Remaining On-Site Contamination
Table 2 – Personal Protective Equipment (PPE) Selection
Table 3 – Personal Protective Equipment (PPE) OSHA Standards
Table 4 – Work Zone Air Monitoring Action Levels
Table 5 – Hand Signals
Table 6 – Chemical Exposure Treatment Procedures
Table 7 – Hospital Directions
Table 8 – Emergency Contacts

APPENDIX B TABLES

Table B1 – Progressive Clinical Presentation of Hypothermia
Table B2 – Cooling Power of Wind on Exposed Flesh as Equivalent Temperature
Table B3 – Threshold Limit Values Work/Warm-up Schedule for 4-Hour Shift

APPENDICES

Appendix A – ASTDR Chemical Fact Sheets
Appendix B – Cold Stress Program
Appendix C – Heat Stress Program
Appendix D – Incident Report Form

1.0 INTRODUCTION

1.1 Purpose

This Health and Safety Plan (HASP) was prepared by AKRF, Inc. (AKRF) on behalf of New 470 LLC (the Volunteer) for the Site located at 12 Eckford Street in the Brooklyn, New York, identified on the New York City Tax Map as Brooklyn Borough Block 2714, Lot 33. The approximately 0.5123-acre Site enrolled in the New York State (NYS) Brownfield Cleanup Program (BCP) (Site No. C224242), which is administered by New York State Department of Environmental Conservation (NYSDEC). The Site location is shown on Figure 1.

The Site was investigated and remediated as a Track 4 cleanup in accordance with Brownfield Cleanup Agreement (BCA) Index No. C224242-10-16, which was executed on December 1, 2016. A BCA Amendment Application was submitted to NYSDEC in July 2019 to document the changes to the BCA, including: (1) the alteration of the northern Site boundary, which resulted in an acreage increase from 0.497 acre to 0.5123 acre; and (2) the merger of former Lot 33 and the portion of former Lot 1 comprising the Site into Lot 33.

The Site was remediated to restricted residential soil cleanup objectives (RRSCOs) (Track 4 cleanup) in general accordance with the November 2016 NYSDEC-approved Remedial Action Work Plan (RAWP) and Decision Document (DD). A Site Management Plan (SMP) was prepared to manage remaining contamination at the Site, as required by the Environmental Easement (EE). The EE is an Institutional Control (IC) restricting the type of use at the Site after completion of the remedial program under the RAWP. Details on the Site environmental history and remedial activities performed under the RAWP are provided in the SMP.

ECs have been incorporated into the Site remedy to control exposure to remaining contamination during the use of the Site to ensure protection of public health and the environment. The following ECs were installed at the Site: (1) a composite cover system; (2) a vapor barrier; (3) an active sub-slab depressurization system (SSDS); and (4) a soil vapor extraction (SVE) system (SVES). An EE granted to the NYSDEC and recorded with the Kings County Clerk requires compliance with the SMP, and all ECs and ICs placed on the Site.

The ICs place restrictions on Site use and mandate operation, maintenance, monitoring, and reporting measures for all ECs and ICs. The SMP specifies the methods necessary to ensure compliance with all ECs and ICs required by the EE for contamination that may remain at the Site. The SMP has been approved by the NYSDEC, and compliance with the plan is required by the grantor of the EE and the grantor's successors and assigns. The SMP may be revised only with the approval of the NYSDEC.

This HASP is an appendix to the SMP, which details the procedures required to manage known or potential residual contamination following completion of the remedial action (RA) at the Site. The purpose of this HASP is to assign responsibilities, establish personnel protection standards and mandatory safety practices and procedures, and provide contingency plans for situations that may arise during Site management inspections, O&M, periodic sampling activities, and any soil/fill disturbance activities conducted at the Site. This HASP takes into account the specific hazards inherent to the Site, and presents procedures to be followed by AKRF and contractors to avoid, and if necessary, protect against health and/or safety hazards. Application of this HASP should be considered on a task-by-task basis, as not all measures are applicable or necessary for all activities on-site. On-site work activities should comply with applicable parts of Occupational Safety and Health Administration (OSHA) Regulations, primarily 29 Code of Federal

Regulations (CFR) Parts 1910 and 1926. A copy this HASP will be maintained on-site during work performed under the SMP.

All workers who participate in activities at the Site that are under the direction of AKRF or the Site owner are required to comply with the provisions specified in this HASP. All Site visitors who enter designated work zones must also comply with this HASP. Refusal or failure to comply with this HASP or violation of any safety procedures by field personnel and/or subcontractors performing work covered by this HASP may result in immediate removal from the Site following consultation with the Site owner's representative. No personnel are permitted to enter permit confined spaces under this HASP.

1.2 Scope

This HASP has been developed to address the health and safety concerns during Site operations and maintenance, monitoring, and inspections after completion of the Site remedy, under the direction of AKRF and any of AKRF's sub-contractor(s), as specified in the SMP. Although this HASP addresses all activities listed herein, work at the individual locations may include all or only some of these tasks. On-site work anticipated under the SMP includes the following tasks:

- Assessing achievement of the remedial performance criteria (e.g., inspections of SSDS, SVES, and the composite cover system);
- Sampling and analysis of appropriate media (e.g., soil vapor or indoor air); and
- Operation and maintenance of the engineering controls (SSDS, SVES, and composite cover system), which may include disturbance and handling of Site soil/fill.

1.3 Application

This HASP applies to all personnel involved in the above tasks under the direction of the Site owner or AKRF who wish to gain access to active intrusive work areas. These tasks include, but are not limited to, the following:

- Owner's representatives, contractors, and subcontractors performing tasks under the direction of AKRF, the owner, and/or the owner's representative;
- Federal, state, or local representatives;
- AKRF or the contractor's employees or subcontractors; and
- AKRF and its subcontractors.

2.0 PROJECT ORGANIZATION AND RESPONSIBILITIES

This section specifies the project team's project organization.

2.1 Project Director

The project director is Mr. Marc Godick, LEP of AKRF. Mr. Godick's responsibilities include the following:

- Plans, schedules, and manages implementation of remediation activities;
- Coordinates with the Site Manager (SM), Site Supervisor (SS), and Project Environmental Safety Manager (PESM) to ensure that health and safety requirements are met;
- Ensures that field work is scheduled with adequate personnel and equipment resources to complete the job safely and enforce Site health and safety rules;
- Conducts periodic inspections;
- Participates in incident investigations;
- Ensures this HASP has all of the required approvals before any Site work is conducted;
- Ensures that the SM is informed of project changes that require modifications of this HASP; and
- Has overall project responsibility for project health and safety.

2.2 Site Manager (SM)

The SM is Mr. Victor Chang of AKRF. The SM responsibilities include the following:

- Manages day-to-day implementation of the Site safety measures specified in this HASP;
- Ensures that adequate communication between field crews, health and safety monitoring personnel, and emergency response personnel is maintained;
- Confirms that field Site personnel are adequately trained and qualified to work at the Site and that proper personal protective equipment (PPE) is utilized by field teams;
- Investigates and report all accidents/incidents to the PM and PESM;
- Conducts and documents periodic safety briefings;
- Stops work if necessary based on health and safety monitoring;
- Acts as the primary point of contact for Site-related activities and coordination with non-project-related Site operations;
- Identifies operational changes that require potential modifications to health and safety procedures and Site safety plans, and reports such changes to the PM and PESM;
- Conducts health and safety monitoring activities;
- Determines upgrades or downgrades of PPE based on Site conditions and/or real-time monitoring results;
- Ensures that monitoring instruments are calibrated; and
- Reports to the project director and PESM to provide summaries of field operations and progress.

2.3 Project Environmental and Safety Manager (PESM)

The PESM is a qualified health and safety professional with experience in hazardous waste Site remediation activities. The PESM is Ms. Amy Jordan of AKRF. The PESM responsibilities include the following:

- Provides for the development and approval of the HASP;

- Serves as the primary contact to review health and safety matters that may arise;
- Approves revised or new safety protocols for field operations;
- Coordinates revisions of this HASP with field personnel;
- Coordinates upgrading or downgrading of personal protective equipment with the SM;
- Assists in the investigation of all accidents/incidents; and
- Enforces work stoppage following reporting of on-site activities from the PM and SM.

2.4 Site Supervisor (SS)

The SS will be appointed from the owner's contractor. If work is being performed solely by AKRF, the Site Supervisor tasks would be performed by the SM (Section 2.2). The SS responsibilities include the following:

- Provides for the necessary training of field crews in accordance with OSHA regulations and provides proof of training to the SM prior to entering the Site;
- Conducts routine safety inspections of their work areas;
- Conducts incident investigations and together with the SM, prepares appropriate reports;
- Enforces health and safety rules and compliance with this HASP; and
- Plans field work using appropriate safe procedures and equipment.

2.5 Site Personnel

The Site Personnel responsibilities include the following:

- Report any unsafe or potentially hazardous conditions to the SM;
- Maintain knowledge of the information, instructions and emergency response actions contained in the HASP;
- Comply with rules, regulations and procedures as set forth in this HASP and any revisions;
- Prevent admittance to work Sites by unauthorized personnel; and
- Inspect all tools and equipment, including PPE, prior to use.

3.0 SITE HISTORY AND BACKGROUND

According to historic Sanborn fire insurance maps, the Site was undeveloped between 1887 and 1905. By 1916, former Lot 1 was developed with an unspecified factory building and former Lot 33 was developed with a barrel shed, a carriage garage, and a cooperage with an office. By 1942, former Lot 1 was developed with a sash and door storage and a woodworking shop associated with the north-adjacent I. Feldman & Son Inc. Sash & Door Manufacturer. Former Lot 30 was developed with a two-story building used for window sash storage. A gasoline tank was shown on the southwestern portion of former Lot 32. Former Lot 32 was labeled as "barrels, boxes, and automobile". Former Lot 33 was developed with a cooperage and an office. By 1951, Lot 1 was developed with a metal container manufacturer and an enameling works with a baking oven and spray booths and former Lot 30 was labeled "to be: garage". Former Lot 1 was developed with a new factory building in 1963 and with a spray booth and storage on the eastern portion by 1965. By 1965, former Lot 30 was developed as a garage and as a factory by 1978. By 1983, former Lot 32 was used for freight storage and for motor freight storage between 1986 and 1991.

Between June 2018 and May 2019, the Site was remediated in accordance with the NYSDEC-approved RAWP. The remedial elements performed consisted of the following:

1. Excavation and off-site disposal of approximately 740 cubic yards of soil/fill exceeding RRSCOs across the upper 2 feet of the entire Site for the installation of the composite cover system. Additionally, source areas including 1,738.15 tons of soil/fill exceeding the United States Environmental Protection Agency (USEPA) and 6 New York Codes, Rules, and Regulations (NYCRR) Part 371 hazardous criteria for lead; and removal of one underground storage tank (UST) and its contents were disposed of off-site in accordance with applicable federal, state, and local regulations.
2. Screening for indications of contamination [by visual means, odor, and monitoring with photoionization detector (PID) equipped with an 11.7 electron Volt (eV) lamp] of all excavated soil/fill during intrusive Site work.
3. Appropriate off-site disposal of all material removed from the Site in accordance with all federal, state, and local regulations for handling, transport, and disposal. Waste disposal facilities will be selected based on the data that has been collected to date and waste classification sampling. Based on the requirements of the selected facility(ies), additional soil waste characterization samples may be collected and analyzed as needed to obtain an approval for soil disposal.
4. Collection and laboratory analysis of 24 Site-wide endpoint samples to document concentrations of contaminants of concern remaining after excavation for the new building foundation for the purposes of Site management. Five tank endpoint samples were also collected from the tank grave following its removal.
5. Installation of a vapor barrier/waterproofing membrane beneath the cellar slab and outside of the sub-grade foundation sidewalls of the cellar to grade to mitigate soil vapor migration into the building where the SSDS could not be installed due to excavation below the groundwater table. The vapor barrier systems consists of GCP Preprufe® 300R and Bituthene® 4000 beneath the cellar, other sumps/pits, along subgrade walls, and elevator pits (or engineer-approved equivalent) that meets or exceeds American Society for Testing and Materials (ASTM) E-1745 standard. Additionally, as part of green remediation techniques, a vapor barrier membrane consisting of Stego® Wrap 20 mil was installed beneath slab-on-grade portion of the building.

6. Installation of an active SSDS beneath the slab-on-grade portion of the Site to prevent vapor intrusion into the proposed building.
7. Installation of an SVES to extract and treat contaminated vapors beneath the northeastern and eastern portions of the Site prior to discharge to the atmosphere.
8. Construction and maintenance of an engineered composite cover system consisting of concrete building foundations, a minimum two-foot clean fill buffer with demarcation barrier in all landscaped and non-covered areas, and sidewalks/pathways to prevent human exposure to residual contaminated soil/fill remaining under the Site.
9. Recording of an EE, including ECs and ICs, to prevent future exposure to any residual contamination remaining at the Site.
10. Preparation of an SMP for long-term management of residual contamination as required by the EE, including plans for: (1) ICs and ECs, (2) monitoring, (3) operation and maintenance, and (4) reporting.

Full documentation of remedial activities is provided in the Final Engineering Report (FER).

4.0 POTENTIAL HAZARDS AT THE SITE

This section presents an assessment of the chemical, biological, and physical hazards that may be encountered.

4.1 Hazard Potential

The remediation has been completed; however, some residual contamination remains in the Site subsurface. Exposure to residual contamination is being prevented by the Site-wide composite cover system, which is designed to remain intact long-term. Disturbance of the concrete slabs, vapor barrier, SSDS and/or SVES without prior NYSDEC approval is prohibited by the EE. In the unlikely event of an unanticipated, accidental, or required disturbance of the composite cover system, or if any cracks or openings in the floor occur, they shall be properly sealed immediately and NYSDEC or its successor agency shall be notified.

4.2 Properties of Chemical Contamination

4.2.1 Chemical Hazards in Soil/Fill, Groundwater, and/or Soil Vapor

Potential chemical pathways that may be encountered include: dermal contact, inhalation, and/or ingestion hazards associated with contaminated soil/fill and/or soil vapor.

The potential health effects from on-site contamination are summarized in Table 1 and detailed in the US Department of Health and Human Services Agency for Toxic Substances and Disease Registry (ATSDR) fact sheets attached in Appendix A.

Table 1
Potential Health Effects from Remaining On-Site Contamination

Chemicals	REL/PEL/STEL (ppm)	Health Hazards
1,1,1-Trichloroethane	REL = 350 ppm PEL = 350 ppm	Irritation eyes, skin; headache, lassitude (weakness, exhaustion), central nervous system depression, poor equilibrium; dermatitis; cardiac arrhythmias; liver damage.
1,1-Dichloroethane	REL = 100 ppm PEL = 100 ppm	Irritation skin; central nervous system depression; liver, kidney, lung damage.
2-Butanone (MEK)	REL = 200 ppm PEL = 200 ppm	Irritation eyes, skin, nose; headache; dizziness; vomiting; dermatitis.
Arsenic	REL = 0.002 mg/m^3 PEL = 0.01 mg/m^3	Ulceration of nasal septum, dermatitis, gastrointestinal disturbances, peripheral neuropathy, respiratory irritation, hyperpigmentation of skin; potential occupational carcinogen.
Copper	REL = 0.1 mg/m^3 PEL = 0.1 mg/m^3	Irritation eyes, upper respiratory system; metal fume fever: chills, muscle ache, nausea, fever, dry throat, cough, lassitude (weakness, exhaustion); metallic or sweet taste; discoloration skin, hair.
Lead	REL = 0.05 mg/m^3 PEL = 0.05 mg/m^3	Lassitude (weakness, exhaustion), insomnia; facial pallor; anorexia, weight loss, malnutrition; constipation, abdominal pain, colic; anemia; gingival lead line; tremor; paralysis wrist, ankles;

Table 1
Potential Health Effects from Remaining On-Site Contamination

Chemicals	REL/PEL/STEL (ppm)	Health Hazards
		encephalopathy; kidney disease; irritation eyes; hypertension.
Mercury	REL = 0.1 mg/m^3 PEL = 0.05 mg/m^3	Irritation eyes, skin; cough, chest pain, dyspnea (breathing difficulty), bronchitis, pneumonitis; tremor, insomnia, irritability, indecision, headache, lassitude (weakness, exhaustion); stomatitis, salivation; gastrointestinal disturbance, anorexia, weight loss; proteinuria.
Nickel	REL = 0.015 mg/m^3 PEL = 1 mg/m^3	Sensitization dermatitis, allergic asthma, pneumonitis; [potential occupational carcinogen].
Polycyclic Aromatic Hydrocarbons (PAHs)	PEL = 5 mg/m^3	Harmful effects to skin, bodily fluids, and ability to fight disease, reproductive problems; [potential occupational carcinogen].
PCBs	PCB-1242: REL = 1 mg/m^3 PEL = 0.001 mg/m^3 PCB-1254: REL = 0.5 mg/m^3 PEL = 0.001 mg/m^3	Rash; anemia, liver, stomach, thyroid damage; reduced ability to fight disease; impaired reproduction.
Vinyl Chloride	PEL = 1 ppm (TWA) PEL = 5 ppm (15-minute)	Lassitude (weakness, exhaustion); abdominal pain, gastrointestinal bleeding; enlarged liver; pallor or cyanosis of extremities; liquid: frostbite; [potential occupational carcinogen].
Zinc	REL = 5 mg/m^3 PEL = 5 mg/m^3	Metal fume fever: chills, muscle ache, nausea, fever, dry throat, cough; lassitude (weakness, exhaustion); metallic taste; headache; blurred vision; low back pain; vomiting; malaise (vague feeling of discomfort); chest tightness; dyspnea (breathing difficulty), rales, decreased pulmonary function.
Particulate	PEL = 15 mg/m^3 (total) PEL = 5 mg/m^3 (respirable)	Irritation eyes, skin, throat, upper respiratory system.

Notes:
REL - National Institute for Occupational Safety and Health (NIOSH) Recommended Exposure Limit
PEL - Occupational Safety and Health Administration (OSHA) Permissible Exposure Limit
STEL - OSHA Short Term Exposure Limit
ppm - parts per million
mg/m^3 - milligrams per cubic meter

4.2.2 Other Chemical Hazards

Although not anticipated, chemicals not identified in this HASP may be used or encountered during Site work. Prior to the initiation of these tasks, Material Safety Data Sheets (MSDS) will be obtained for each of the chemicals to be used and all Site workers and visitors who may potentially be exposed will be made aware of the hazards.

4.3 Physical Hazards

Physical hazards will be addressed as necessary. More detailed safety procedures are provided as appendices to this HASP, where applicable.

4.3.1 Cold Stress

At certain times of the year, workers may be exposed to the hazards of working in cold environments. Potential hazards in cold environments include frostbite, trench/immersion foot, and hypothermia as well as slippery surfaces and brittle equipment. A Cold Stress Program is provided as Appendix B.

4.3.2 Heat Stress

Heat stress is a significant potential hazard, which is greatly exacerbated with the use of PPE in hot environments. The potential hazards of working in hot environments include dehydration, cramps, heat rash, heat exhaustion, and heat stroke. A heat stress prevention program will be implemented when ambient temperatures exceed 70 ºF for personnel wearing impermeable clothing. A Heath Stress Program is provided as Appendix C.

4.3.3 Noise

Noise is a potential hazard associated with the operation of heavy equipment, power tools, pumps, and generators. Operations that require the use of hearing protection include operation of heavy equipment, generators, jackhammers, chain saws, sheetpile drivers, dewatering equipment, and pressure washers. Site workers who will perform suspected high noise tasks and operations will be provided with earplugs. Workers not performing those tasks but working in close proximity to that equipment will also be required to wear hearing protection. If deemed necessary by the SM, the PESM will be consulted on the need for additional hearing protection and the need to monitor sound levels for Site activities.

4.3.4 Hand and Power Tools

To complete the various tasks for the proposed scope of work, personnel may be required to use hand and/or power tools. The use of hand and power tools can present a variety of hazards, including physical harm from being struck by flying objects, being cut or struck by the tool, fire, and electrocution. Work gloves, safety glasses, and hard hats will be worn by the operating personnel at all times when using hand and power tools, and ground fault interrupter (GFI)-equipped circuits will be used for all power tools.

4.3.5 Slips, Trips, and Falls

Working in and around the Site will pose slip, trip and fall hazards due to slippery surfaces that may be oil covered, or from surfaces that are wet from rain or ice. Excavation at the Sites will cause uneven footing in the trenches and around the spoil piles. Care should be exercised when walking at the Site, especially when carrying equipment.

4.3.6 Fire and Explosion

The use of cutting/grinding tools which may spark in the vicinity of flammable building materials, use of gasoline-or diesel-powered instruments could present the possibility of encountering fire and explosion hazards. Care should be exercised and fire extinguishers available during work which presents fire or explosion hazard.

4.3.7 Manual Lifting

Manual lifting of heavy objects such as sections of pipe or blower supplies may be required. Failure to follow proper lifting technique can result in back injuries and strains.

Site workers will be instructed to use power equipment to lift heavy loads whenever possible and to evaluate loads before trying to lift them (i.e., they should be able to easily tip the load and then return it to its original position). Heavy loads should be carried with a buddy and the following proper lifting techniques will be stressed: 1) make sure footing is solid, 2) make back straight with no curving or slouching, 3) center body over feet, 4) grasp the object firmly and as close to your body as possible, 5) lift with legs, and 6) turn with your feet, don't twist. Back injuries are a serious concern as they are the most common workplace injury, often resulting in lost or restricted work time, and long treatment and recovery periods.

4.3.8 Utilities (Electrocution and Fire Hazards)

Underground utilities at the Site pose fire, explosion, and electrocution hazards. Potential adverse effects of electrical hazards include burns and electrocution, which could result in death. Underground utilities, facilities, equipment, and structures will be located prior to start of any intrusive activities. The Underground Utilities Call Center will be notified a minimum of three days before any subsurface disturbance. Care shall be exercised to avoid damage to utilities beneath the surface slab. As-builts will be consulted and a geophysical survey shall be completed, if needed.

4.4 Task Hazard Analysis

The scope of work described in Section 1.2 will be accomplished with the following tasks:

1. Mobilization/Demobilization: mobilize equipment; establish Site security, work zones, and staging areas.
2. Site Preparation: locate utilities, construct decontamination pad, construct negative pressure environmental enclosure around excavation area, if required.
3. Sampling: use of appropriate PPE (e.g., nitrile gloves, safety glasses, ear plugs, hard hats).
4. Soil/Fill Excavation and Loading: in the event soil/fill removal is necessary, remove floor slab in designated area, excavate material and segregate dissimilar materials, load dump trucks or drums, decontaminate heavy equipment, and backfill excavations.
5. Site Restoration Activities: restore flooring in excavation area and any damaged adjacent floors/walls to original condition.

All of these tasks include the potential for the chemical and physical hazards, and care should be taken within the work zone to avoid these hazards, as described above. There is a higher potential for chemical hazards to occur during activities that involve the removal and handling of contaminated material; however, exposure to vapors may occur to a lesser degree as soon as the top concrete slab is removed. All tasks should be conducted using the appropriate PPE for the associated exposure, as described in Section 6.0.

5.0 PROCESS SAFETY MANAGEMENT

Process safety management is a systematic way of identifying the potential health and safety hazards associated with major phases of work on the project and the methods to avoid, control and mitigate those hazards. Process safety management guidelines will be developed for all activities as necessary, prior to start-up. Process safety management will be used to train work crews in proper safety procedures during phase preparatory meetings.

6.0 PERSONAL PROTECTIVE EQUIPMENT (PPE)

The PPE required for various remediation tasks are based on 29 CFR 1910.120, Hazardous Waste Operations and Emergency Response (HAZWOPER), Appendix B, "General Description and Discussion of the Levels of Protection and Protective Gear." All on-site personnel shall wear, at a minimum, Level D PPE. The protection will be based on the air monitoring described in Section 7.0. Table 2 lists the required PPE for the anticipated remediation tasks:

Table 2
Personal Protection Equipment (PPE) Selection

Level of Protection and PPE Required		Work Conditions
Level D (x) Steel Toe Boots (x) Hard Hat (as needed) (x) Work Gloves (as needed) (x) Reflective Vest (as needed)	(x) Safety Glasses or Face Shield (x) Ear Plugs (as needed) (x) Latex or nitrile Gloves (as needed)	• All activities except those noted under Levels D modified and C
Level D – Modified ***(in addition to Level D)*** (x) Nitrile Gloves (x) Overboots	(x) Tyvek Coveralls (as needed) -or- (x) Saranex/Polyethylene-coated Tyvek Coveralls (as needed)	• Activities with potential for contact with grossly contaminated material
Level C – ***(in addition to Level D – Modified)*** (x) Half-Face Respirator ( ) Full Face Respirator ( ) Full-Face PAPR	( ) Particulate Cartridge (P100) ( ) Organic Cartridge (x) Dual Organic/Particulate Cartridge	• If PID > 10 ppm and/or • If PM_{10} > 5.0 mg/m^3
Level C - Modified ***(in addition to Level D – Modified)*** ( ) Half-Face Respirator (x) Full Face Respirator ( ) Full-Face PAPR	( ) Particulate Cartridge (P100) ( ) Organic Cartridge (x) Dual Organic/Particulate Cartridge	• If PID >50 ppm; or • Eye irritation occurs
Note: Vapor (PID) and particulate (PM_{10}) measurements are work zone action levels sustained for 15 minutes or greater.		

The PPE specified in Table 2 reflects the hazard analysis presented in Section 4.0 and PPE selection required by 29 CFR 1910.132. For the purposes of PPE selection, the PESM and SM are considered competent persons. The signatures in this HASP constitute certification of the hazard assessment. For any activities not covered by Table 2, the SM will conduct the hazard assessment and select the appropriate required PPE in consultation with the PESM.

6.1 OSHA Requirements for PPE

All PPE used must meet the OSHA standards presented in Table 3.

Table 3
PPE OSHA Standards

Type of Protection	Regulation	Source
Eye and Face	29 CFR 1910.133	ANSI Z87.1 1968
Respiratory	29 CFR 1910.134	ANSI Z88.1 1980
Head	29 CFR 1910.135	ANSI Z89.1 1969
Foot	29 CFR 1910.136	ANSI Z41.1 1967
Note: ANSI - American National Standards Institute		

7.0 AIR MONITORING

7.1 Monitoring Requirements

Environmental health and safety monitoring will be performed during all soil disturbance activities in accordance with this section.

7.1.1 Work Zone Monitoring

The following monitoring instruments will be available for use during field operation as necessary:

- Photoionization detector (PID) - MiniRAE 3000 with 11.7 eV lamp, or equivalent
- Particulate meter - TSI DustTrak II/SidePak AM 520, or equivalent

All air monitoring equipment will be calibrated and maintained in accordance with manufacturer's requirements and will be recorded by the SM in the daily log.

Organic vapor concentrations shall be measured using the PID during excavating and other intrusive activities. During intrusive operations, organic vapor concentrations shall be taken at least once every hour. Organic vapor concentrations shall be measured upwind of the work zone to determine background concentrations at least twice a day, (once in the morning and once in the afternoon). The SM will interpret monitoring results using professional judgment.

A particulate meter will be used to measure airborne particulate matter during intrusive activities. Monitoring will be at least once per hour and readings will be averaged over a 15-minute period for comparison with the action levels. Monitoring personnel will make a best effort to collect airborne particulate monitoring data from downwind of the intrusive activity. If off-site sources are considered to be the source of the measured particulate, upwind readings will also be collected.

Any trenches and excavations will be monitored before potential entry at the beginning of each shift. Trenches are not expected to be entered on a regular basis.

Measurements will be taken prior to commencement of work and periodically or continuously during the work, depending on the contaminant being monitored, as outlined in Table 4. Measurements will be made as close to the workers as practicable and at the breathing height of the workers.

The SM shall set up the equipment and confirm that it is working properly. His/her designee may oversee the air measurements during the day. The initial measurement for the day will be performed before the start of work and will establish the background level for that day. The final measurement for the day will be performed after the end of work. The action levels and required responses are listed in Table 4:

Table 4
Work Zone Air Monitoring Action Levels

Air Monitoring Instrument	Monitoring Location	Action Level	Site Action
PID	Breathing Zone	0 - 10 ppm	No respiratory protection is required
		10 - 50 ppm	Upgrade to Level C PPE. or Stop work, withdraw from work area.
		> 50 ppm	Stop Work. Resume work when readings are less than 50 ppm.
Particulate Meter	Excavation	< 5 mg/m^3	No respiratory protection is required Implement work practices to reduce/minimize airborne dust generation, e.g., spray/misting of soil with water
		Between 5 mg/m^3 and 125 mg/m^3	Upgrade to Level C PPE. Apply additional dust suppression measures. If < 2.5 mg/m^3 resume work using Level D. Otherwise, use Level C.
		> 125 mg/m^3	Stop Work. Apply additional dust suppression measures. Resume work when less than 125 mg/m^3.
Notes: ppm - parts per million mg/m^3 - milligrams per cubic meter Action levels are for sustained readings for 15 minutes or more.			

8.0 ZONES, PROTECTION, AND COMMUNICATION

8.1 Site Control

Site zones are intended to control the potential spread of contamination and to assure that only authorized individuals are permitted into potentially hazardous areas. A three-zone approach will be utilized and will include: an Exclusion Zone (EZ), Contamination Reduction Zone (CRZ) and a Support Zone (SZ). These zones will be established prior to beginning work for each task requiring such delineation (i.e., intrusive work beneath the Site cover or handling of contaminated materials). For larger scale subgrade work, the work zones will be sketched out and maps delineating the various work zones will be available at the Site and used during initial Site-specific training.

The project is being conducted under the requirements of 29 CFR 1910.120, and any personnel working in an area where the potential for exposure to Site contaminants exists, will only be allowed access after proper training and medical documentation is provided to the SM. These records will be maintained by the SM and copies should be provided to the SM prior to mobilization for project activities.

The following will be used for guidance in revising these preliminary zone designations, if necessary:

- Support Zone (SZ) - The SZ is an uncontaminated area that will be the field support area for most operations. The SZ provides for field team communications and staging for emergency response. Appropriate sanitary facilities and safety equipment will be located in this zone. Potentially contaminated personnel/materials are not allowed in this zone. The only exception will be appropriately packaged/decontaminated and labeled samples.
- Contamination Reduction Zone (CRZ) - The CRZ is established between the EZ and the SZ. The CRZ contains the contamination reduction corridor and provides an area for decontamination of personnel and portable hand-held equipment, tools and heavy equipment. A personnel decontamination area will be prepared at each exclusion zone. The CRZ will be used for Exclusion Zone entry and egress in addition to access for heavy equipment and emergency support services.
- Exclusion Zone (EZ) - All activities that may involve exposure to Site contaminants, hazardous materials and/or conditions should be considered an exclusion zone. This zone will be clearly delineated by cones, tapes or other means. The SM may establish more than one EZ where different levels of protection may be employed or different hazards exist. The size of the EZ shall be determined by the Site SM allowing adequate space for the activity to be completed, field members and emergency equipment.

8.2 Contamination Control

8.2.1 Personnel Decontamination Station

Personnel hygiene, coupled with diligent decontamination, will significantly reduce the potential for exposure.

8.2.2 Minimization of Contact With Contaminants

During completion of all Site activities, personnel should attempt to minimize the degree of contact with contaminated materials. This involves a conscientious effort to keep "clean" during Site activities. All personnel should minimize physical contact with contamination to ultimately minimize the degree of decontamination required and the generation of waste materials from Site operations.

Field procedures will be developed to control over spray and runoff and to ensure that unprotected personnel working nearby are not affected.

8.2.3 Personnel Decontamination Sequence

Consideration will be given to prevailing wind directions so that the decontamination line, the SZ, and CRZ exit is upwind from the exclusion zone and the first station of the decontamination line. Decontamination will be performed by removing all PPE used in EZ and placing in drums/trash cans within the CRZ. Baby wipes will be available for washing hands and face after PPE removal. In addition, brushes will be available for removing soil/fill from boots.

8.2.4 Emergency Decontamination

If circumstances dictate that contaminated clothing cannot be readily removed, then remove gross contamination and wrap injured personnel with clean garments/blankets to avoid contaminating other personnel or transporting equipment.

If the injured person can be moved, he/she will be moved to the EZ boundary and decontaminated by Site personnel, as previously described, before emergency responders handle the victim. If the person cannot be moved because of the extent of the injury (a back or neck injury) provisions shall be made to ensure that emergency response personnel will be able to respond to victim without being exposed to potentially hazardous atmospheric conditions. If the potential for inhalation hazards exist, such as with open excavation, this area will be covered with poly to eliminate any potential inhalation hazards. All emergency personnel are to be immediately informed of the injured person's condition, potential contaminants, and provided with all pertinent chemical data.

8.2.5 Heavy Equipment Decontamination

Decontamination of chemically contaminated heavy equipment will be accomplished using high-pressure steam or dry decontamination with brushes and shovels. Decontamination shall take place on a decontamination pad and all liquids used in the decontamination procedure will be collected. Vehicles or equipment brought into an exclusion zone will be treated as contaminated, and will be decontaminated prior to removal. All liquids used in the decontamination procedure will be collected, stored and disposed of in accordance with federal, state, and local regulations. Personnel performing this task will wear the proper PPE as described in Table 2.

8.3 Communications

The following communications equipment shall be specified as appropriate:

- Telephones - A cellular telephone will be located in the SZ for communication with emergency support services/facilities and the home office. Personnel in the EZ can carry cellular telephones for communication as well if Level D PPE has been determined to be appropriate.
- Hand Signals - Hand signals shall be used by field teams along with the buddy system. They shall be known by the entire field team before operations commence and their use covered during Site-specific training. Typical hand signals are described in Table 5.

Table 5
Hand Signals

Signal	Meaning
Hand gripping throat	Out of air, can't breathe
Grip on a partner's wrist or placement of both hands around a partner's waist	Leave area immediately/no debate
Hands on top of head	Need assistance
Thumbs up	Okay/I'm all right/I understand
Thumbs down	No/negative

9.0 MEDICAL SURVEILLANCE PROCEDURES

All personnel performing field work where potential exposure to contaminants exists at the Site are required to have passed a complete medical surveillance examination in accordance with 29 CFR 1910.120(f) and, where applicable, expanded health standards.

9.1 Medical Surveillance Requirements

A physician's medical release for work will be confirmed by the SM before a worker can enter the exclusion zone. The medical release shall consider the type of work to be performed and the required PPE. The examination will be conducted annually at a minimum. Additional medical testing may be required by the PESM in consultation with the SM if an over-exposure or accident occurs, if an employee exhibits symptoms of exposure, or if other Site conditions warrant further medical surveillance.

10.0 SAFETY CONSIDERATIONS

10.1 Excavation and Trenching

The safety requirements for each excavation must be determined by a competent person who is capable of identifying existing and predictable hazards and work conditions that are unsanitary, hazardous, or dangerous to employees. The competent person must also have the authorization to take prompt corrective measures to eliminate unsatisfactory conditions.

The following are general requirements for work activities in and around excavations:

- Prior to initiation of any excavation activity, the location of underground utilities, obstruction, etc. will be determined. The New York State one-call center will be contacted by the excavation subcontractor a minimum of 72 hours prior to excavation activities.
- All excavations will be inspected daily and after each period of rain by the competent person prior to commencement of work activities. Evidence of cave-ins, slides, sloughing, or surface cracks or excavations will be cause for work to cease until necessary precautions are taken to safeguard employees.
- Excavated and other materials or equipment that could fall or roll into the excavation shall be placed at least 5 feet from the edge of the excavation.
- Each employee in an excavation shall be protected from cave-ins by an adequate protective system designed in accordance with CFR 1926.652 (b) or (c) except when excavations are less than 5 feet in depth and examination of the ground by a competent person provides no indication of a potential cave-in or excavation is made entirely in stable rock.
- Ladders will be positioned no further than 25 feet from any individual working in the trench.

11.0 DISPOSAL PROCEDURES

All discarded materials, waste materials, or other objects shall be handled in such a way as to preclude the potential for spreading contamination, creating a sanitary hazard, or causing litter to be left on-site. All potentially contaminated materials, e.g., clothing, gloves, etc., will be bagged or drummed as necessary, labeled, and segregated for disposal. All non-contaminated materials shall be collected and bagged for appropriate disposal. The waste management procedures will be conducted in accordance with applicable local, state, and federal regulations.

12.0 EMERGENCY RESPONSE/CONTINGENCY PLAN

This section establishes procedures and provides information for use during a project emergency. Emergencies happen unexpectedly and quickly, and require an immediate response; therefore, contingency planning and advanced training of staff are essential. Specific elements of emergency support procedures addressed in the following subsections include communications, local emergency support units, preparation for medical emergencies, first aid for injuries incurred on-site, record keeping, and emergency Site evacuation procedures.

12.1 Responsibilities

12.1.1 Project Environmental and Safety Manager (PESM)

The PESM is responsible for overseeing and approving the Emergency Response/Contingency Plan, and performing audits to determine that the plan is in effect and that all pre-emergency requirements are met. The PESM acts as a liaison to applicable regulatory agencies and notifies OSHA of reportable accidents.

12.1.2 Site Manager (SM)

The SM is responsible for ensuring that all personnel are evacuated safely and that machinery and processes are shut down or stabilized in the event of a stop work order or evacuation. The SM is required to immediately notify the PM and PESM of any fatalities or catastrophes (three or more workers injured and hospitalized) so that the PESM can notify OSHA within the required time frame. The PESM will be notified of all OSHA recordable injuries, fires, spills, releases or equipment damage in excess of $500 within 24 hours. The SM also serves as the Alternate Emergency Coordinator.

12.1.3 Emergency Coordinator (EC)

In the event of an emergency, the Emergency Coordinator, shall make contact with local emergency response personnel. In these contacts, the EC will inform response personnel about the nature of work on the Site, the type of contaminants and associated health or safety effects, and the nature of the emergency, particularly if it is related to exposure to contaminants.

The EC shall review this plan and verify emergency phone numbers and identify hospital routes prior to beginning work on-site. The EC shall make necessary arrangements to be prepared for any emergencies that could occur.

The EC shall implement the Emergency Response/Contingency Plan whenever conditions at the Site warrant such action.

12.1.4 Site Personnel

Site personnel are responsible for knowing the Emergency Response/Contingency Plan and the procedures contained herein. Personnel are expected to notify the Emergency Coordinator of situations that could constitute a Site emergency.

12.2 Communications

A variety of communication systems may be utilized during emergency situations. These are discussed in the following sections.

The primary form of communication during an emergency between field groups in the exclusion zone and the Emergency Coordinator will be verbal communications. During an emergency situation, the lines will be kept clear so that instructions can be received by all field teams.

12.2.1 Telephone Communications

A cellular telephone will be available on-site.

12.2.2 Hand Signals

Hand signals will be employed by downrange field teams where necessary for communication during emergency situations. Hand signals are presented in Table 5 in Section 8.3.

12.3 Pre-Emergency Planning

Before the field activities begin, the local emergency response personnel may be notified by the Site owner's representative or contractor of the schedule for field activities and about the materials that are thought to exist on the Site so that they will be able to respond quickly and effectively in the event of a fire, explosion, or other emergency.

To be able to deal with any emergency that might occur during remedial activities at the Site, emergency telephone numbers will be readily available in the SM vehicle or the Site office. These telephone numbers are presented Section 12.16. The Emergency phone numbers listed are preliminary and will be updated as needed prior to the start of work. Immediately prior to mobilization the SM shall verify all numbers, and document any changes in the Site logbook. Hospital route maps will also be readily available in the SM vehicle and/or Site office.

12.4 Emergency Medical Treatment

The procedures and rules in this HASP are designed to prevent employee injury. However, should an injury occur, no matter how slight, it will be reported to the SM immediately. First-aid equipment such as a first aid kit and disposable eye washes will be available on-site.

During the Site safety briefing, project personnel will be informed of the location of the first aid station(s) that have been set up. In the case of a medical emergency, the SM will determine the nature of the emergency and he/she will have someone call for an ambulance, if needed. If the nature of the injury is not serious, i.e., the person can be moved without expert emergency medical personnel, he/she should be driven to a hospital by on-site personnel. Directions to the hospital with a hospital route map are provided in Section 12.15/Table 7. Unless they are in immediate danger, severely injured persons will not be moved until paramedics can attend to them. Some injuries, such as severe cuts and lacerations or burns, may require immediate treatment. Any first aid instructions that can be obtained from doctors or paramedics before an emergency-response squad arrives at the Site or before the injured person can be transported to the hospital, will be followed closely.

12.5 Emergency Site Evacuation Routes and Procedures

In the event of a Site emergency that would require the evacuation of personnel, the EC will immediately contact the Site owner or owner's representative (this person may or may not be on-site). All project personnel will be instructed on proper emergency response procedures and locations of emergency telephone numbers during the initial Site safety meeting. If an emergency occurs at the work area, including but not limited to fire, explosion or significant release of toxic gas into the atmosphere, immediate evacuation of all personnel is necessary due to an immediate or impending danger. The following evacuation procedures will be used:

- The field team leader will initiate evacuation procedures by signaling to leave the Site or exclusion zone. The signal for Site evacuation will consist of three long blasts on an air horn.
- All heavy equipment will be shut down and all personnel will evacuate the work areas and assemble at a pre-determined meeting location. The designated meeting location for the Site will be at the sidewalk along the west side of West Street.
- All personnel suspected to be in or near the contract work area should be accounted for and the whereabouts or missing persons determined immediately.
- The field team leader will then give further instruction.

If any task covered under this HASP has the potential for significant hazards, evacuation drills will be performed as deemed necessary by the SM and PESM.

12.6 Fire Prevention and Protection

In the event of a fire or explosion, the work area will be evacuated immediately and the EC will notify the local fire and police departments. No personnel will fight a fire beyond the stage where it can be put out with a portable extinguisher (incipient stage).

Fires will be prevented by adhering to the following precautions:

- Good housekeeping and storage of materials.
- Storage of flammable liquids and gases will be stored in flammable storage cabinets away from oxidizers when not in use.
- Oxygen will be stored at least 25 feet away from acetylene cylinders when not in use. Oxygen and acetylene may not be stored on welding carts.
- No smoking in the exclusion zone or any work area.
- No hot work without a properly executed hot work permit.
- Shutting off engines to refuel.
- Grounding and bonding metal containers during transfer of flammable liquids.
- Use of UL approved flammable storage cans.
- Fire extinguishers rated at least 10 pounds Class A, B, and C located on all heavy equipment, in all trailers and near all hot work activities.
- Monthly inspections of all fire extinguishers.

The contractor is responsible for the maintenance of fire prevention and/or control equipment and the control of fuel source hazards.

12.7 Overt Chemical Exposure

The following are standard procedures to treat chemical exposures. Other, specific procedures detailed on the MSDS will be followed as necessary. If first aid or emergency medical treatment is necessary, the Emergency Coordinator will contact the appropriate emergency facilities. All chemical exposure incidents must be reported in writing to the PESM. If a member of the field crew demonstrates symptoms of chemical exposure, another team member (buddy) should remove the individual from the immediate area of contamination. The buddy should communicate to the SM (via voice and hand signals) of the chemical exposure. The SM should contact the appropriate emergency response agency. The procedures outlined in Table 6 should be followed.

Table 6
Chemical Exposure Treatment Procedures

Exposure Pathway	Treatment Procedure
Skin and Eye Contact	Use copious amounts of soap and water. Wash/rinse affected areas thoroughly, and then provide appropriate medical attention. Eyes should be rinsed for 15 minutes upon chemical contamination. Skin should also be rinsed for 15 minutes if contact with caustics, acids or hydrogen peroxide occurs.
Inhalation	Move to fresh air. Decontaminate and transport to hospital or local medical provider.
Ingestion	Decontaminate and transport to emergency medical facility.
Puncture Wound or Laceration	Decontaminate and transport to emergency medical facility.

12.8 Personal Injury

In case of personal injury at the Site, the following procedures should be followed:

- Another team member (buddy) should signal the field team leader that an injury has occurred.
- A field team member trained in first aid can administer treatment to an injured worker.
- If deemed necessary, the victim should then be transported to the nearest hospital or medical center. If necessary, an ambulance should be called to transport the victim.
- The field team leader or field safety officer (FSO) is responsible for making certain that an Incident Report Form (provided as Appendix D) is completed. This form is to be submitted to the AKRF health and safety officer (HSO). Follow-up action should be taken to correct the situation that caused the accident.
- Any incident (near miss, property damage, first aid, medical treatment, etc.) must be reported.
- A first-aid kit and an eye-wash will be kept on-site during the field activities.

12.9 Decontamination During Medical Emergencies

If emergency life-saving first aid and/or medical treatment are required, normal decontamination procedures may need to be abbreviated or postponed. The SM or designee will accompany contaminated victims to the medical facility to advise on matters involving decontamination, when necessary. The outer garments can be removed if they do not cause delays, interfere with

treatment or aggravate the problem. Respiratory equipment must always be removed. Protective clothing can be cut away. If the outer contaminated garments cannot be safely removed on Site, a plastic barrier between the injured individual and clean surfaces should be used to help prevent contamination of the inside of ambulances and/or medical personnel. Outer garments may then be removed at the medical facility. No attempt will be made to wash or rinse the victim if his/her injuries are life threatening, unless it is known that the individual has been contaminated with an extremely toxic or corrosive material which could also cause severe injury or loss of life to emergency response personnel. For minor medical problems or injuries, the normal decontamination procedures will be followed.

12.10 Accident/Incident Reporting

Written confirmation of verbal reports of injuries or other emergencies are to be submitted to the PESM within 24 hours. The Incident Report Form is provided as Appendix D.

In addition to the incident reporting procedures and actions described in this HASP, the SM will coordinate with the owner's representative for reporting and notification for all environmental, safety, and other incidents.

If necessary, a Site safety briefing will be held to discuss accidents/incidents and any findings from the investigation of the incident. This HASP will be modified if deemed necessary by the PESM.

12.11 Spill Control and Response

All small hazardous spills/environmental releases shall be contained as close to the source as possible. Whenever possible, the MSDS will be consulted to assist in determining the best means of containment and cleanup. For small spills, absorbent materials such as sand, sawdust or commercial sorbents should be placed directly on the substance to contain the spill and aid recovery. Any acid spills should be diluted or neutralized carefully prior to attempting recovery. Berms of earthen or sorbent materials can be used to contain the leading edge of the spills. Drains or drainage areas should be blocked. All spill containment materials will be properly disposed. An exclusion zone of 50-100 feet around the spill area should be established depending on the size and type of the spill.

The following steps should be taken by the EC:

1. Determine the nature, identity and amounts of major spill components;
2. Make sure all unnecessary persons are removed from the spill area;
3. Notify appropriate response teams and authorities;
4. Use proper PPE in consultation with the SM;
5. If a flammable liquid, gas or vapor is involved, remove all ignition sources and use non-sparking and/or explosive proof equipment to contain or clean up the spill (diesel only vehicles, air operated pumps, etc.);
6. If possible, try to stop the leak with appropriate material;
7. Remove all surrounding materials that can react or compound with the spill; and
8. Notify the Site owner and determine who will report the spill to the NYSDEC Hotline, as applicable.

12.12 Emergency Equipment

The following minimum emergency equipment shall be kept and maintained on-site:

- Industrial first aid kit

- Portable eye washes
- Fire extinguishers (one per vehicle and heavy equipment)
- Absorbent material

12.13 Postings

The following information shall be posted or be readily visible and available at conspicuous locations throughout the Site:

- Emergency telephone numbers
- Hospital Route Map (Figure 1)

12.14 Restoration and Salvage

After an emergency, prompt restoration of utilities, fire protection equipment, medical supplies, and other equipment will reduce the possibility of further losses. Some of the items that may need to be addressed are:

- Refilling fire extinguishers
- Refilling medical supplies
- Recharging eyewashes and/or showers
- Replenishing spill control supplies
- Replacing used air horns

12.15 Hospital Directions

The address and directions to the nearest hospital to the project Site are provided in Table 7:

Table 7
Hospital Directions

Hospital Name	NYC Health and Hospitals - Woodhull
Phone Number	(718) 963-8000
Address/Location	760 Broadway, Brooklyn, New York 11206
Directions	Head northeast on Newton Street towards Graham Avenue. Turn right onto Graham Street. Turn left onto Richardson Street. Turn right onto Humboldt Street. Continue straight onto Sumner Place. Turn right onto Park Avenue. The emergency room will be on the right.

A map showing the Site evacuation meeting point and driving route to the hospital is provided as Figure 1.

12.16 Emergency Contacts

Table 8
Emergency Contacts

Company	Individual Name	Title	Contact Number
AKRF	Michelle Lapin, P.E.	Remedial Engineer	(646) 388-9520 (office)
	Marc Godick	Project Director	(914) 922-2356 (office)
	Amy Jordan	Project Manager	(646) 388-9864 (office)
New 470 LLC	Ronald Walker	Client Representative	(631) 234-1600 (office)
Ambulance, Fire Department & Police Department	-	-	911
NYSDEC Spill Hotline	-	-	(800) 457-7362

The emergency contact list will be updated as needed.

13.0 TRAINING

13.1 General Health and Safety Training

In accordance with 29 CFR 1910.120, hazardous waste Site workers shall, at the time of job assignment, have received a minimum of 40 hours of initial health and safety training for hazardous waste Site operations unless otherwise noted in the above reference. At a minimum, the training will have consisted of instruction in the topics outlined in the standard. Personnel who have not met the requirements for initial training shall not be allowed to work in any Site activities during which they may be exposed to hazards (chemical or physical). Proof of training shall be submitted to the SM prior to the start of field activities. Other personnel involved in ancillary, or support activities, including transportation of material for disposal, shall have the proper training as required by federal, state, and local regulations.

13.2 Annual Eight-Hour Refresher Training

Annual eight-hour refresher training will be required of hazardous waste Site field personnel working in the work zone to maintain their qualifications for fieldwork. The training will cover a review of 29 CFR 1910.120 requirements and related company programs and procedures.

13.3 Supervisor Training

Personnel acting in a supervisory capacity shall have received 8 hours of instruction in addition to the initial 40 hours training.

13.4 Site-Specific Training

Prior to commencement of field activities, all field personnel assigned to the project will have completed training that will specifically address the activities, procedures, monitoring, and equipment used in the Site operations. The training will cover Site and facility layout, hazards

and emergency services, and all provisions contained within this HASP. This training will also allow field workers to clarify anything they do not understand and to reinforce their responsibilities regarding safety and operations for their particular activity. The training should include the following topics:

- General requirements of this HASP;
- Review of the scope of work;
- Names of personnel responsible for Site safety and health;
- Potential hazards and acute effects of compounds present at the Site;
- Air monitoring procedures;
- Proper use of personal protective equipment;
- Safe use of engineering controls and equipment on the Site;
- Decontamination procedures; and
- Work practices by which the employee can minimize risk from hazards. This may include a specific review of heavy equipment safety, safety during inclement weather, changes in common escape rendezvous point, Site security measures, or other Site-specific issues that need to be addressed before work begins.

Personnel that have not received Site-specific training will not be allowed in the work zone.

13.5 On-Site Safety Briefings

Project personnel working in designated work zones on-site will be given health and safety briefings periodically by the SM to assist Site personnel in safely conducting their work activities. The briefings will include information on new operations to be conducted, changes in work practices or changes in the Site's environmental conditions, as well as periodic reinforcement of previously discussed topics. The briefings will also provide a forum to facilitate conformance with safety requirements and to identify performance deficiencies related to safety during daily activities or as a result of safety inspections. The meetings will also be an opportunity to periodically update the crews on monitoring results.

14.0 LOGS, REPORTS, AND RECORD KEEPING

The following is a summary of required health and safety logs, reports, and record keeping.

14.1 Medical and Training Records

Copies or verification of training (40 hour, 8 hour, supervisor, and Site-specific training) and medical clearance for hazardous waste Site work and respirator use will be maintained by the SM.

14.2 On-Site Log

A log of personnel on-site each day will be kept by the SM in a field logbook.

14.3 Exposure Records

The SM will periodically notify the PESM of exposure monitoring results that require workers to upgrade to Level C. All personal monitoring results, laboratory reports, calculations and air sampling data sheets will be maintained by the SM during Site work.

14.4 Accident/Incident Reports

The incident reporting and investigation during Site work will be completed using an Incident Report Form, provided as Appendix D.

14.5 Hazard Communication Program/Material Safety Data Sheets (MSDS)

MSDS will be obtained for applicable substances and included in the Site hazard communication file. The hazard communication program will be maintained on-Site in accordance with 29 CFR 1910.1200.

14.6 Work Permits

All work permits, including lockout/tagout, sidewalk permits, and debris container permits (if necessary) will be maintained in the project files. Copies of the work permits shall also be provided to the SM, and the Site owner's representative.

15.0 FIELD PERSONNEL REVIEW

This form serves as documentation that field personnel have read, or have been informed of, and understand the provisions of this HASP for the Site at 12 Eckford Street, Brooklyn, New York. It is maintained on-site by the SM as a project record. Each field team member shall sign this section after training in the contents of this HASP has been completed. Site workers must sign this form after Site-specific training is completed and before being permitted to work on-site.

AFFIDAVIT

I have read, or have been informed of, this Health and Safety Plan and understand the information presented. I have also completed Site-specific training for the work detailed in the project specifications. I will comply with the provisions contained therein.

Name (Print and Sign) and Company	Date

FIGURE 1

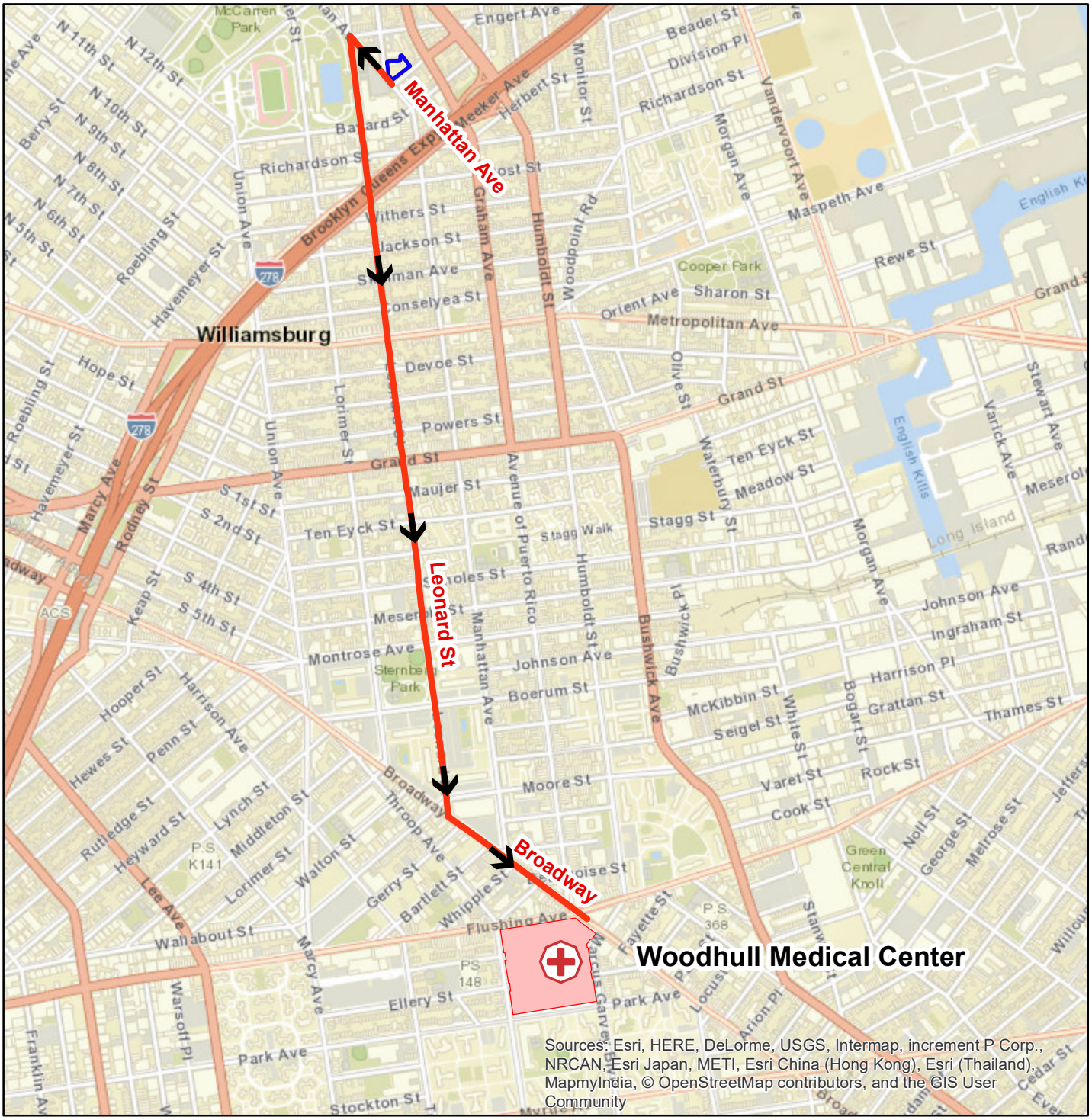

Legend

- Route to Hospital
- Project Site Location
- Hospital Location

0 1,200 2,400 Feet

Woodhull Medical Center
760 Broadway
Brooklyn, NY 11206

AKRF
440 Park Avenue South, New York, NY 10016

New 470 Project
12 Eckford Street
Brooklyn, New York

HOSPITAL ROUTE MAP

DATE	PROJECT NO.	FIGURE
8/1/2019	12306	1

©2019 AKRF W:\Projects\12306 - 12 ECKFORD STREET\Technical\GIS and Graphics\Hazmat\12306 Route to Hospital.mxd8/1/2019 3:24:00 PM mveilleux

APPENDIX A

ASTDR CHEMICAL FACT SHEETS

ATSDR
AGENCY FOR TOXIC SUBSTANCES AND DISEASE REGISTRY

2-BUTANONE
CAS # 78-93-3

Agency for Toxic Substances and Disease Registry ToxFAQs September 1995

This fact sheet answers the most frequently asked health questions (FAQs) about 2-butanone. For more information, call the ATSDR Information Center at 1-888-422-8737. This fact sheet is one in a series of summaries about hazardous substances and their health effects. This information is important because this substance may harm you. The effects of exposure to any hazardous substance depend on the dose, the duration, how you are exposed, personal traits and habits, and whether other chemicals are present.

SUMMARY: Exposure to 2-butanone occurs in the workplace or from using consumer products containing it. Mild irritations of the eyes, nose, and throat were seen in people who breathed 2-butanone. This chemical has been found in at least 472 of 1,416 National Priorities List sites identified by the Environmental Protection Agency.

What is 2-butanone?

(Pronounced 2-byōō′tə-nōn)

2-Butanone is a manufactured chemical but it is also present in the environment from natural sources. It is a colorless liquid with a sharp, sweet odor. It is also known as methyl ethyl ketone (MEK).

2-Butanone is produced in large quantities. Nearly half of its use is in paints and other coatings because it will quickly evaporate into the air and it dissolves many substances. It is also used in glues and as a cleaning agent.

2-Butanone occurs as a natural product. It is made by some trees and found in some fruits and vegetables in small amounts. It is also released to the air from car and truck exhausts.

What happens to 2-butanone when it enters the environment?

- 2-Butanone enters the air during production, use and transport, and from hazardous waste sites.
- In air, one-half of it will break down from sunlight in 1 day or less.
- It dissolves in water and is broken down more slowly to a simpler chemical form in about 2 weeks.
- It does not stick to soil and will travel through the soil to the groundwater.
- Some of the 2-butanone in soil or water will evaporate into the air.
- It does not deposit in the bottom of rivers or lakes.
- It is not expected to concentrate in fish or increase in the tissues of animals further up the food chain.

How might I be exposed to 2-butanone?

- Breathing contaminated air from the production or use of paints, glues, coatings, or cleaning agents containing it.
- Breathing contaminated air near hazardous waste sites.
- Breathing cigarette smoke.
- Sniffing glues.
- Drinking contaminated water from wells near manufacturing or hazardous waste sites.
- Skin contact with the liquid during production or use.

How can 2-butanone affect my health?

The known health effects to people from exposure to 2-butanone are irritation of the nose, throat, skin, and eyes. No one has died from breathing 2-butanone alone. If 2-butanone is breathed along with other chemicals that damage health, it can increase the amount of damage that occurs.

Serious health effects in animals have been seen only at very high levels. When breathed, these effects included birth defects, loss of consciousness, and death.

When swallowed, rats had nervous system effects including drooping eyelids and uncoordinated muscle movements. There was no damage to the ability to reproduce.

Mice who breathed low levels for a short time showed temporary behavioral effects. Mild kidney damage was seen in animals that drank water with lower levels of 2-butanone for a short time.

There are no long-term studies with animals either breathing or drinking 2-butanone.

How likely is 2-butanone to cause cancer?

The Department of Health and Human Services has not classified 2-butanone as to its human carcinogenicity.

The International Agency for Research on Cancer and the Environmental Protection Agency (EPA) have also not classified 2-butanone as to its human carcinogenicity.

Two studies of workers exposed to 2-butanone and other chemicals did not find an increase in cancer. No animal studies are available that examine the potential for 2-butanone to cause cancer.

Is there a medical test to show whether I've been exposed to 2-butanone?

Tests are available to measure 2-butanone or its breakdown products in blood, breath, and urine. These tests are useful only to measure recent exposures because 2-butanone and its breakdown products leave the body rapidly. These tests are not usually performed at your doctor's office, but your doctor can take blood or urine samples and send them to a testing laboratory.

Has the federal government made recommendations to protect human health?

The EPA requires that discharges or spills into the environment of 5,000 pounds of more of 2-butanone be reported.

The Occupational Safety and Health Administration (OSHA) set an occupational exposure limit of 200 parts of 2-butanone per million parts of workplace air (200 ppm) for an 8-hour workday, 40-hour workweek.

The American Conference of Governmental Industrial Hygienists (ACGIH) and the National Institute for Occupational Safety and Health (NIOSH) have established the same guidelines as OSHA for the workplace.

Glossary

Carcinogenicity: Ability to cause cancer.

Evaporate: To change into a vapor or a gas.

ppm: Parts per million.

Long-term: Lasting one year or longer.

Short time: Lasting 14 days or less.

References

Agency for Toxic Substances and Disease Registry (ATSDR). 1992. Toxicological profile for 2-butanone. Atlanta, GA: U.S. Department of Health and Human Services, Public Health Service.

Where can I get more information? For more information, contact the Agency for Toxic Substances and Disease Registry, Division of Toxicology, 1600 Clifton Road NE, Mailstop F-32, Atlanta, GA 30333. Phone: 1-888-422-8737, FAX: 770-488-4178. ToxFAQs Internet address via WWW is http://www.atsdr.cdc.gov/toxfaq.html ATSDR can tell you where to find occupational and environmental health clinics. Their specialists can recognize, evaluate, and treat illnesses resulting from exposure to hazardous substances. You can also contact your community or state health or environmental quality department if you have any more questions or concerns.

ATSDR
AGENCY FOR TOXIC SUBSTANCES AND DISEASE REGISTRY

ACETONE
CAS # 67-64-1

Agency for Toxic Substances and Disease Registry ToxFAQs September 1995

This fact sheet answers the most frequently asked health questions (FAQs) about acetone. For more information, call the ATSDR Information Center at 1-888-422-8737. This fact sheet is one in a series of summaries about hazardous substances and their health effects. It's important you understand this information because this substance may harm you. The effects of exposure to any hazardous substance depend on the dose, the duration, how you are exposed, personal traits and habits, and whether other chemicals are present.

SUMMARY: Exposure to acetone results mostly from breathing air, drinking water, or coming in contact with products or soil that contain acetone. Exposure to moderate-to-high amounts of acetone can irritate your eyes and respiratory system, and make you dizzy. Very high exposure may cause you to lose consciousness. This chemical has been found in at least 572 of 1,416 National Priorities List sites identified by the Environmental Protection Agency.

What is acetone?

(Pronounced ăs′ĭ-tōn′)

Acetone is a manufactured chemical that is also found naturally in the environment. It is a colorless liquid with a distinct smell and taste. It evaporates easily, is flammable, and dissolves in water. It is also called dimethyl ketone, 2-propanone, and beta-ketopropane.

Acetone is used to make plastic, fibers, drugs, and other chemicals. It is also used to dissolve other substances.

It occurs naturally in plants, trees, volcanic gases, forest fires, and as a product of the breakdown of body fat. It is present in vehicle exhaust, tobacco smoke, and landfill sites. Industrial processes contribute more acetone to the environment than natural processes.

What happens to acetone when it enters the environment?

- A large percentage (97%) of the acetone released during its manufacture or use goes into the air.
- In air, about one-half of the total amount breaks down from sunlight or other chemicals every 22 days.
- It moves from the atmosphere into the water and soil by rain and snow. It also moves quickly from soil and water back to air.
- Acetone doesn't bind to soil or build up in animals.
- It's broken down by microorganisms in soil and water.
- It can move into groundwater from spills or landfills.
- Acetone is broken down in water and soil, but the time required for this to happen varies.

How might I be exposed to acetone?

- Breathing low background levels in the environment.
- Breathing higher levels of contaminated air in the workplace or from using products that contain acetone (for example, household chemicals, nail polish, and paint).
- Drinking water or eating food containing acetone.
- Touching products containing acetone.
- For children, eating soil at landfills or hazardous waste sites that contain acetone.
- Smoking or breathing secondhand smoke.

How can acetone affect my health?

If you are exposed to acetone, it goes into your blood which then carries it to all the organs in your body. If it is a small amount, the liver breaks it down to chemicals that are not harmful and uses these chemicals to make energy for normal body functions. Breathing moderate- to-high levels

of acetone for short periods of time, however, can cause nose, throat, lung, and eye irritation; headaches; light-headedness; confusion; increased pulse rate; effects on blood; nausea; vomiting; unconsciousness and possibly coma; and shortening of the menstrual cycle in women.

Swallowing very high levels of acetone can result in unconsciousness and damage to the skin in your mouth. Skin contact can result in irritation and damage to your skin.

The smell and respiratory irritation or burning eyes that occur from moderate levels are excellent warning signs that can help you avoid breathing damaging levels of acetone.

Health effects from long-term exposures are known mostly from animal studies. Kidney, liver, and nerve damage, increased birth defects, and lowered ability to reproduce (males only) occurred in animals exposed long-term. It is not known if people would have these same effects.

How likely is acetone to cause cancer?

The Department of Health and Human Services, the International Agency for Research on Cancer, and the Environmental Protection Agency (EPA) have not classified acetone for carcinogenicity.

Acetone does not cause skin cancer in animals when applied to the skin. We don't know if breathing or swallowing acetone for long periods will cause cancer. Studies of workers exposed to it found no significant risk of death from cancer.

Is there a medical test to show whether I've been exposed to acetone?

Methods are available to measure the amount of acetone in your breath, blood, and urine. The test can tell you how much acetone you were exposed to, although the amount that people have naturally in their bodies varies with each person. The tests can't tell you if you will experience any health effects from the exposure.

The test must be performed within 2-3 days after exposure because acetone leaves your body within a few days. These tests are not routinely performed at your doctor's office, but your doctor can take blood or urine samples and send them to a testing laboratory.

Has the federal government made recommendations to protect human health?

The EPA requires that spills of 5,000 pounds or more of acetone be reported.

The Occupational Safety and Health Administration (OSHA) has set a maximum concentration limit in workplace air of 1,000 parts of acetone per million parts of air (1,000 ppm) for an 8-hour workday over a 40-hour week to protect workers. The National Institute for Occupational Safety and Health (NIOSH) recommends an exposure limit of 250 ppm in workplace air for up to a 10-hour workday over a 40-hour workweek.

Glossary

Carcinogenicity: Ability to cause cancer.
Evaporate: To change into a vapor or a gas.
Ingesting: Taking food or drink into your body.
Long-term: Lasting one year or longer.

References

Agency for Toxic Substances and Disease Registry (ATSDR). 1994. Toxicological profile for acetone. Atlanta, GA: U.S. Department of Health and Human Services, Public Health Service.

Where can I get more information? For more information, contact the Agency for Toxic Substances and Disease Registry, Division of Toxicology, 1600 Clifton Road NE, Mailstop F-32, Atlanta, GA 30333. Phone:1-888-422-8737, FAX: 770-488-4178. ToxFAQs Internet address via WWW is http://www.atsdr.cdc.gov/toxfaq.html ATSDR can tell you where to find occupational and environmental health clinics. Their specialists can recognize, evaluate, and treat illnesses resulting from exposure to hazardous substances. You can also contact your community or state health or environmental quality department if you have any more questions or concerns.

ATSDR
AGENCY FOR TOXIC SUBSTANCES AND DISEASE REGISTRY

ARSENIC
CAS # 7440-38-2

Division of Toxicology ToxFAQs™ December 2003

This fact sheet answers the most frequently asked health questions (FAQs) about arsenic. For more information, call the ATSDR Information Center at 1-888-422-8737. This fact sheet is one in a series of summaries about hazardous substances and their health effects. It's important you understand this information because this substance may harm you. The effects of exposure to any hazardous substance depend on the dose, the duration, how you are exposed, personal traits and habits, and whether other chemicals are present.

HIGHLIGHTS: Exposure to higher than average levels of arsenic occurs mostly in the workplace, near hazardous waste sites, or in areas with high natural levels. At high levels, inorganic arsenic can cause death. Exposure to lower levels for a long time can cause a discoloration of the skin and the appearance of small corns or warts. Arsenic has been found at 1,014 of the 1,598 National Priority List sites identified by the Environmental Protection Agency (EPA).

What is arsenic?

Arsenic is a naturally occurring element widely distributed in the earth's crust. In the environment, arsenic is combined with oxygen, chlorine, and sulfur to form inorganic arsenic compounds. Arsenic in animals and plants combines with carbon and hydrogen to form organic arsenic compounds.

Inorganic arsenic compounds are mainly used to preserve wood. Organic arsenic compounds are used as pesticides, primarily on cotton plants.

What happens to arsenic when it enters the environment?

- ❑ Arsenic cannot be destroyed in the environment. It can only change its form.
- ❑ Arsenic in air will settle to the ground or is washed out of the air by rain.
- ❑ Many arsenic compounds can dissolve in water.
- ❑ Fish and shellfish can accumulate arsenic, but the arsenic in fish is mostly in a form that is not harmful.

How might I be exposed to arsenic?

- ❑ Eating food, drinking water, or breathing air containing arsenic.
- ❑ Breathing contaminated workplace air.
- ❑ Breathing sawdust or burning smoke from wood treated with arsenic.
- ❑ Living near uncontrolled hazardous waste sites containing arsenic.
- ❑ Living in areas with unusually high natural levels of arsenic in rock.

How can arsenic affect my health?

Breathing high levels of inorganic arsenic can give you a sore throat or irritated lungs. Ingesting high levels of inorganic arsenic can result in death. Lower levels of arsenic can cause nausea and vomiting, decreased production of red and white blood cells, abnormal heart rhythm, damage to blood vessels, and a sensation of "pins and needles" in hands and feet.

Ingesting or breathing low levels of inorganic arsenic for a long time can cause a darkening of the skin and the

appearance of small "corns" or "warts" on the palms, soles, and torso.

Skin contact with inorganic arsenic may cause redness and swelling.

Organic arsenic compounds are less toxic than inorganic arsenic compounds. Exposure to high levels of some organic arsenic compounds may cause similar effects as inorganic arsenic.

How likely is arsenic to cause cancer?

Several studies have shown that inorganic arsenic can increase the risk of lung cancer, skin cancer, bladder cancer, liver cancer, kidney cancer, and prostate cancer. The World Health Organization (WHO), the Department of Health and Human Services (DHHS), and the EPA have determined that inorganic arsenic is a human carcinogen.

How can arsenic affect children?

We do not know if exposure to arsenic will result in birth defects or other developmental effects in people. Birth defects have been observed in animals exposed to inorganic arsenic.

It is likely that health effects seen in children exposed to high amounts of arsenic will be similar to the effects seen in adults.

How can families reduce the risk of exposure to arsenic?

❑ If you use arsenic-treated wood in home projects, you should wear dust masks, gloves, and protective clothing to decrease exposure to sawdust.
❑ If you live in an area with high levels of arsenic in water or soil, you should use cleaner sources of water and limit contact with soil.

Is there a medical test to show whether I've been exposed to arsenic?

There are tests to measure the level of arsenic in blood, urine, hair, or fingernails. The urine test is the most reliable test for arsenic exposure within the last few days. Tests on hair and fingernails can measure exposure to high levels or arsenic over the past 6-12 months. These tests can determine if you have been exposed to above-average levels of arsenic. They cannot predict how the arsenic levels in your body will affect your health.

Has the federal government made recommendations to protect human health?

EPA has set limits on the amount of arsenic that industrial sources can release to the environment and has restricted or canceled many uses of arsenic in pesticides. EPA has set a limit of 0.01 parts per million (ppm) for arsenic in drinking water.

The Occupational Safety and Health Administration has set limits of 10 μg arsenic per cubic meter of workplace air (10 $\mu g/m^3$) for 8 hour shifts and 40 hour work weeks.

Source of Information

Agency for Toxic Substances and Disease Registry (ATSDR). 2000. Toxicological Profile for Arsenic. Atlanta, GA: U.S. Department of Health and Human Services, Public Health Service.

Where can I get more information? For more information, contact the Agency for Toxic Substances and Disease Registry, Division of Toxicology, 1600 Clifton Road NE, Mailstop F-32, Atlanta, GA 30333. Phone: 1-888-422-8737, FAX: 770-488-4178. ToxFAQs™ Internet address is http://www.atsdr.cdc.gov/toxfaq.html . ATSDR can tell you where to find occupational and environmental health clinics. Their specialists can recognize, evaluate, and treat illnesses resulting from exposure to hazardous substances. You can also contact your community or state health or environmental quality department if you have any more questions or concerns.

ATSDR
AGENCY FOR TOXIC SUBSTANCES AND DISEASE REGISTRY

COPPER

CAS # 7440-50-8

Division of Toxicology ToxFAQs™ September 2002

This fact sheet answers the most frequently asked health questions (FAQs) about copper. For more information, call the ATSDR Information Center at 1-888-422-8737. This fact sheet is one in a series of summaries about hazardous substances and their health effects. It is important you understand this information because this substance may harm you. The effects of exposure to any hazardous substance depend on the dose, the duration, how you are exposed, personal traits and habits, and whether other chemicals are present.

HIGHLIGHTS: Copper is a reddish metal that occurs naturally in the environment. It also occurs naturally in plants and animals. Low levels of copper are essential for maintaining good health. High levels can cause harmful effects such as irritation of the nose, mouth and eyes, vomiting, diarrhea, stomach crumps, and nausea. Copper has been found in at least 884 of the 1,613 National Priorities List sites identified by the Environmental Protection Agency (EPA).

What is copper?

Copper is a reddish metal that occurs naturally in rocks, soil, water, and air. Copper also occurs naturally in plants and animals.

Metallic copper can be easily molded or shaped. Metallic copper can be found in the U.S. penny, electrical wiring, and some water pipes. Metallic copper is also found in mixtures (called alloys) with other metals such as brass and bronze. Copper is also found as part of other compounds forming salts. Copper salts occur naturally, but are also manufactured. The most common copper salt is copper sulfate. Most copper compounds are blue-green in color. Copper compounds are commonly used in agriculture to treat plant diseases like mildew, for water treatment and, as preservatives for wood, leather, and fabrics.

What happens to copper when it enters the environment?

❑ Copper can enter the environment from the mining of copper and other metals and from factories that make or use metallic copper or copper compounds.

❑ It can also enter the environment through domestic waste water, combustion of fossil fuels and wastes, wood production, phosphate fertilizer production, and natural sources (e.g., windblown dust from soils, volcanoes, decaying vegetation, forest fires, and sea spray).

❑ Copper in soil strongly attaches to organic material and minerals.

❑ Copper that dissolves in water becomes rapidly bound to particles suspended in the water.

❑ Copper does not typically enter groundwater.

❑ Copper carried by particles emitted from smelters and ore processing plants is carried back to the ground by gravity or in rain or snow.

❑ Copper does not break down in the environment.

How might I be exposed to copper?

❑ Breathing air, drinking water, eating food, and by skin contact with soil, water, or other copper-containing substances.

❑ Some copper in the environment can be taken up by plants and animals.

❑ Higher exposure may occur if your water is corrosive and you have copper plumbing and brass water fixtures. ❑ You may be exposed to higher amounts of copper if you drink water or swim in lakes or reservoirs recently treated with copper to control algae or receive cooling water from a power plant that may have high amounts of dissolved copper.

❑ Using some garden products (e.g., fungicides) to control plant diseases.

❑ Living near bronze and brass production facilities may expose you to higher copper levels in soil.

❑ You may breathe copper-containing dust or have skin contact if you work in the industry of mining copper or

processing the ore. You may breathe high levels if you grind or weld copper metal.

How can copper affect my health?

Copper is essential for good health, but high amounts can be harmful. Long-term exposure to copper dust can irritate your nose, mouth, and eyes, and cause headaches, dizziness, nausea, and diarrhea.

Drinking water with higher than normal levels of copper may cause vomiting, diarrhea, stomach cramps, and nausea. Intentionally high intakes of copper can cause liver and kidney damage and even death.

How likely is copper to cause cancer?

We do not know whether copper can cause cancer in humans. The EPA has determined that copper is not classifiable as to carcinogenicity.

How can copper affect children?

Exposure to high levels of copper will result in the same type of effects in children and adults. Studies in animals suggest that the young children may have more severe effects than adults; we do not know if this would also be true in humans. There is a very small percentage of infants and children who are unusually sensitive to copper.

We do not know if copper can cause birth defects or other developmental effects in humans. Studies in animals suggest that ingestion of high levels of copper may cause a decrease in fetal growth.

How can families reduce the risk of exposure to copper?

❑ The greatest potential source of copper exposure is through drinking water, especially in water that is first drawn in the morning after sitting in copper pipes and brass faucets overnight.

❑ To reduce exposure, run the water for at least 15-30 seconds before using it.

❑ If you are exposed to copper at work, you may carry copper home on your skin, clothes, or tools. You can avoid this by showering, and changing clothing before leaving work, and your work clothes should be kept separate from other clothes and laundered separately.

Is there a medical test to show whether I've been exposed to copper?

Copper is normally found in all tissues of the body, blood, urine, feces, hair, and nails. High levels of copper in these samples can show that you have been exposed to higher than normal levels of copper. Tests to measure copper levels in the body are not routinely available at the doctor's office because they require special equipment. These tests cannot tell the extent of exposure or whether you will experience harmful effects.

Has the federal government made recommendations to protect human health?

The EPA has determined that drinking water should not contain more than 1.3 milligrams of copper per liter of water (1.3 mg/L).

The Occupational Safety and Health Administration (OSHA) has set a limit of 0.1 mg per cubic meter (0.1 mg/m^3) of copper fumes (vapor generated from heating copper) and 1 mg/m^3 of copper dusts (fine metallic copper particles) and mists (aerosol of soluble copper) in workroom air during an 8-hour work shift, 40-hour workweek.

The Food and Nutrition Board of the Institute of Medicine recommends dietary allowances (RDAs) of 340 micrograms (340 μg) of copper per day for children aged 1-3 years, 440 μg/day for children aged 4-8 years, 700 μg/day for children aged 9-13 years, 890 μg/day for children aged 14-18 years, and 900 μg/day for adults.

References

Agency for Toxic Substances and Disease Registry (ATSDR). 2002. Toxicological Profile for Copper (Draft for Public Comment). Atlanta, GA: U.S. Department of Health and Human Services, Public Health Service.

Where can I get more information? For more information, contact the Agency for Toxic Substances and Disease Registry, Division of Toxicology, 1600 Clifton Road NE, Mailstop F-32, Atlanta, GA 30333. Phone: 1-888-422-8737, FAX: 770-488-4178. ToxFAQs Internet address via WWW is http://www.atsdr.cdc.gov/toxfaq.html. ATSDR can tell you where to find occupational and environmental health clinics. Their specialists can recognize, evaluate, and treat illnesses resulting from exposure to hazardous substances. You can also contact your community or state health or environmental quality department if you have any more questions or concerns.

ATSDR
AGENCY FOR TOXIC SUBSTANCES AND DISEASE REGISTRY

LEAD

CAS # 7439-92-1

Division of Toxicology and Environmental Medicine ToxFAQs™ August 2007

This fact sheet answers the most frequently asked health questions (FAQs) about lead. For more information, call the ATSDR Information Center at 1-800-232-4636. This fact sheet is one in a series of summaries about hazardous substances and their health effects. It is important you understand this information because this substance may harm you. The effects of exposure to any hazardous substance depend on the dose, the duration, how you are exposed, personal traits and habits, and whether other chemicals are present.

HIGHLIGHTS: Exposure to lead can happen from breathing workplace air or dust, eating contaminated foods, or drinking contaminated water. Children can be exposed from eating lead-based paint chips or playing in contaminated soil. Lead can damage the nervous system, kidneys, and reproductive system. Lead has been found in at least 1,272 of the 1,684 National Priority List sites identified by the Environmental Protection Agency (EPA).

What is lead?

Lead is a naturally occurring bluish-gray metal found in small amounts in the earth's crust. Lead can be found in all parts of our environment. Much of it comes from human activities including burning fossil fuels, mining, and manufacturing.

Lead has many different uses. It is used in the production of batteries, ammunition, metal products (solder and pipes), and devices to shield X-rays. Because of health concerns, lead from paints and ceramic products, caulking, and pipe solder has been dramatically reduced in recent years. The use of lead as an additive to gasoline was banned in 1996 in the United States.

What happens to lead when it enters the environment?

❏ Lead itself does not break down, but lead compounds are changed by sunlight, air, and water.

❏ When lead is released to the air, it may travel long distances before settling to the ground.

❏ Once lead falls onto soil, it usually sticks to soil particles.

❏ Movement of lead from soil into groundwater will depend on the type of lead compound and the characteristics of the soil.

How might I be exposed to lead?

❏ Eating food or drinking water that contains lead. Water pipes in some older homes may contain lead solder. Lead can leach out into the water.

❏ Spending time in areas where lead-based paints have been used and are deteriorating. Deteriorating lead paint can contribute to lead dust.

❏ Working in a job where lead is used or engaging in certain hobbies in which lead is used, such as making stained glass.

❏ Using health-care products or folk remedies that contain lead.

How can lead affect my health?

The effects of lead are the same whether it enters the body through breathing or swallowing. Lead can affect almost every organ and system in your body. The main target for lead toxicity is the nervous system, both in adults and children. Long-term exposure of adults can result in decreased performance in some tests that measure functions of the nervous system. It may also cause weakness in fingers, wrists, or ankles. Lead exposure also causes small increases in blood pressure, particularly in middle-aged and older people and can cause anemia. Exposure to high lead levels can severely damage the brain and kidneys in adults or children and ultimately cause death. In pregnant women, high levels of exposure to lead may cause miscarriage. High-level exposure in men can damage the organs responsible for sperm production.

How likely is lead to cause cancer?

We have no conclusive proof that lead causes cancer in humans. Kidney tumors have developed in rats and mice that had been given large doses of some kind of lead compounds. The Department of Health and Human Services

(DHHS) has determined that lead and lead compounds are reasonably anticipated to be human carcinogens and the EPA has determined that lead is a probable human carcinogen. The International Agency for Research on Cancer (IARC) has determined that inorganic lead is probably carcinogenic to humans and that there is insufficient information to determine whether organic lead compounds will cause cancer in humans.

How can lead affect children?

Small children can be exposed by eating lead-based paint chips, chewing on objects painted with lead-based paint, or swallowing house dust or soil that contains lead.

Children are more vulnerable to lead poisoning than adults. A child who swallows large amounts of lead may develop blood anemia, severe stomachache, muscle weakness, and brain damage. If a child swallows smaller amounts of lead, much less severe effects on blood and brain function may occur. Even at much lower levels of exposure, lead can affect a child's mental and physical growth.

Exposure to lead is more dangerous for young and unborn children. Unborn children can be exposed to lead through their mothers. Harmful effects include premature births, smaller babies, decreased mental ability in the infant, learning difficulties, and reduced growth in young children. These effects are more common if the mother or baby was exposed to high levels of lead. Some of these effects may persist beyond childhood.

How can families reduce the risks of exposure to lead?

❑ Avoid exposure to sources of lead.

❑ Do not allow children to chew or mouth surfaces that may have been painted with lead-based paint.

❑ If you have a water lead problem, run or flush water that has been standing overnight before drinking or cooking with it.

❑ Some types of paints and pigments that are used as make-up or hair coloring contain lead. Keep these kinds of products away from children

❑ If your home contains lead-based paint or you live in an area contaminated with lead, wash children's hands and faces often to remove lead dusts and soil, and regularly clean the house of dust and tracked in soil.

Is there a medical test to determine whether I've been exposed to lead?

A blood test is available to measure the amount of lead in your blood and to estimate the amount of your recent exposure to lead. Blood tests are commonly used to screen children for lead poisoning. Lead in teeth or bones can be measured by X-ray techniques, but these methods are not widely available. Exposure to lead also can be evaluated by measuring erythrocyte protoporphyrin (EP) in blood samples. EP is a part of red blood cells known to increase when the amount of lead in the blood is high. However, the EP level is not sensitive enough to identify children with elevated blood lead levels below about 25 micrograms per deciliter (μg/dL). These tests usually require special analytical equipment that is not available in a doctor's office. However, your doctor can draw blood samples and send them to appropriate laboratories for analysis.

Has the federal government made recommendations to protect human health?

The Centers for Disease Control and Prevention (CDC) recommends that states test children at ages 1 and 2 years. Children should be tested at ages 3–6 years if they have never been tested for lead, if they receive services from public assistance programs for the poor such as Medicaid or the Supplemental Food Program for Women, Infants, and Children, if they live in a building or frequently visit a house built before 1950; if they visit a home (house or apartment) built before 1978 that has been recently remodeled; and/or if they have a brother, sister, or playmate who has had lead poisoning. CDC considers a blood lead level of 10 μg/dL to be a level of concern for children.

EPA limits lead in drinking water to 15 μg per liter.

References

Agency for Toxic Substances and Disease Registry (ATSDR). 2007. Toxicological Profile for lead (Update). Atlanta, GA: U.S. Department of Public Health and Human Services, Public Health Service.

Where can I get more information? For more information, contact the Agency for Toxic Substances and Disease Registry, Division of Toxicology and Environmental Medicine, 1600 Clifton Road NE, Mailstop F-32, Atlanta, GA 30333. Phone: 1-800-232-4636, FAX: 770-488-4178. ToxFAQs Internet address via WWW is http://www.atsdr.cdc.gov/toxfaq.html. ATSDR can tell you where to find occupational and environmental health clinics. Their specialists can recognize, evaluate, and treat illnesses resulting from exposure to hazardous substances. You can also contact your community or state health or environmental quality department if you have any more questions or concerns.

ATSDR
AGENCY FOR TOXIC SUBSTANCES AND DISEASE REGISTRY

MERCURY
CAS # 7439-97-6

Agency for Toxic Substances and Disease Registry ToxFAQs April 1999

This fact sheet answers the most frequently asked health questions (FAQs) about mercury. For more information, call the ATSDR Information Center at 1-888-422-8737. This fact sheet is one in a series of summaries about hazardous substances and their health effects. It's important you understand this information because this substance may harm you. The effects of exposure to any hazardous substance depend on the dose, the duration, how you are exposed, personal traits and habits, and whether other chemicals are present.

HIGHLIGHTS: Exposure to mercury occurs from breathing contaminated air, ingesting contaminated water and food, and having dental and medical treatments. Mercury, at high levels, may damage the brain, kidneys, and developing fetus. This chemical has been found in at least 714 of 1,467 National Priorities List sites identified by the Environmental Protection Agency.

What is mercury?
(Pronounced mŭr′kyə-rē)

Mercury is a naturally occurring metal which has several forms. The metallic mercury is a shiny, silver-white, odorless liquid. If heated, it is a colorless, odorless gas.

Mercury combines with other elements, such as chlorine, sulfur, or oxygen, to form inorganic mercury compounds or "salts," which are usually white powders or crystals. Mercury also combines with carbon to make organic mercury compounds. The most common one, methylmercury, is produced mainly by microscopic organisms in the water and soil. More mercury in the environment can increase the amounts of methylmercury that these small organisms make.

Metallic mercury is used to produce chlorine gas and caustic soda, and is also used in thermometers, dental fillings, and batteries. Mercury salts are sometimes used in skin lightening creams and as antiseptic creams and ointments.

What happens to mercury when it enters the environment?

- Inorganic mercury (metallic mercury and inorganic mercury compounds) enters the air from mining ore deposits, burning coal and waste, and from manufacturing plants.
- It enters the water or soil from natural deposits, disposal of wastes, and volcanic activity.
- Methylmercury may be formed in water and soil by small organisms called bacteria.
- Methylmercury builds up in the tissues of fish. Larger and older fish tend to have the highest levels of mercury.

How might I be exposed to mercury?

- Eating fish or shellfish contaminated with methylmercury.
- Breathing vapors in air from spills, incinerators, and industries that burn mercury-containing fuels.
- Release of mercury from dental work and medical treatments.
- Breathing contaminated workplace air or skin contact during use in the workplace (dental, health services, chemical, and other industries that use mercury).
- Practicing rituals that include mercury.

How can mercury affect my health?

The nervous system is very sensitive to all forms of mercury. Methylmercury and metallic mercury vapors are more harmful than other forms, because more mercury in these forms reaches the brain. Exposure to high levels of metallic, inorganic, or organic mercury can permanently damage the brain, kidneys, and developing fetus. Effects on brain functioning may result in irritability, shyness, tremors, changes in vision or hearing, and memory problems.

Short-term exposure to high levels of metallic mercury vapors may cause effects including lung damage, nausea,

vomiting, diarrhea, increases in blood pressure or heart rate, skin rashes, and eye irritation.

How likely is mercury to cause cancer?

There are inadequate human cancer data available for all forms of mercury. Mercuric chloride has caused increases in several types of tumors in rats and mice, and methylmercury has caused kidney tumors in male mice. The EPA has determined that mercuric chloride and methylmercury are possible human carcinogens.

How can mercury affect children?

Very young children are more sensitive to mercury than adults. Mercury in the mother's body passes to the fetus and may accumulate there. It can also can pass to a nursing infant through breast milk. However, the benefits of breast feeding may be greater than the possible adverse effects of mercury in breast milk.

Mercury's harmful effects that may be passed from the mother to the fetus include brain damage, mental retardation, incoordination, blindness, seizures, and inability to speak. Children poisoned by mercury may develop problems of their nervous and digestive systems, and kidney damage.

How can families reduce the risk of exposure to mercury?

Carefully handle and dispose of products that contain mercury, such as thermometers or fluorescent light bulbs. Do not vacuum up spilled mercury, because it will vaporize and increase exposure. If a large amount of mercury has been spilled, contact your health department. Teach children not to play with shiny, silver liquids.

Properly dispose of older medicines that contain mercury. Keep all mercury-containing medicines away from children.

Pregnant women and children should keep away from rooms where liquid mercury has been used.

Learn about wildlife and fish advisories in your area from your public health or natural resources department.

Is there a medical test to show whether I've been exposed to mercury?

Tests are available to measure mercury levels in the body. Blood or urine samples are used to test for exposure to metallic mercury and to inorganic forms of mercury. Mercury in whole blood or in scalp hair is measured to determine exposure to methylmercury. Your doctor can take samples and send them to a testing laboratory.

Has the federal government made recommendations to protect human health?

The EPA has set a limit of 2 parts of mercury per billion parts of drinking water (2 ppb).

The Food and Drug Administration (FDA) has set a maximum permissible level of 1 part of methylmercury in a million parts of seafood (1 ppm).

The Occupational Safety and Health Administration (OSHA) has set limits of 0.1 milligram of organic mercury per cubic meter of workplace air (0.1 mg/m^3) and 0.05 mg/m^3 of metallic mercury vapor for 8-hour shifts and 40-hour work weeks.

References

Agency for Toxic Substances and Disease Registry (ATSDR). 1999. Toxicological profile for mercury. Atlanta, GA: U.S. Department of Health and Human Services, Public Health Service.

Where can I get more information? For more information, contact the Agency for Toxic Substances and Disease Registry, Division of Toxicology, 1600 Clifton Road NE, Mailstop F-32, Atlanta, GA 30333. Phone: 1-888-422-8737, FAX: 770-488-4178. ToxFAQs Internet address via WWW is http://www.atsdr.cdc.gov/toxfaq.html ATSDR can tell you where to find occupational and environmental health clinics. Their specialists can recognize, evaluate, and treat illnesses resulting from exposure to hazardous substances. You can also contact your community or state health or environmental quality department if you have any more questions or concerns.

ToxFAQs - for Nickel

This PDF has been moved to new location
Please click the link to go to the new location and update your bookmark.

http://www.atsdr.cdc.gov/toxfaqs/tfacts15.pdf

ATSDR
AGENCY FOR TOXIC SUBSTANCES AND DISEASE REGISTRY

POLYCYCLIC AROMATIC HYDROCARBONS (PAHs)

Agency for Toxic Substances and Disease Registry ToxFAQs September 1996

This fact sheet answers the most frequently asked health questions (FAQs) about polycyclic aromatic hydrocarbons (PAHs). For more information, call the ATSDR Information Center at 1-888-422-8737. This fact sheet is one in a series of summaries about hazardous substances and their health effects. This information is important because this substance may harm you. The effects of exposure to any hazardous substance depend on the dose, the duration, how you are exposed, personal traits and habits, and whether other chemicals are present.

SUMMARY: Exposure to polycyclic aromatic hydrocarbons usually occurs by breathing air contaminated by wild fires or coal tar, or by eating foods that have been grilled. PAHs have been found in at least 600 of the 1,430 National Priorities List sites identified by the Environmental Protection Agency (EPA).

What are polycyclic aromatic hydrocarbons?

(Pronounced pŏl′ĭ-sī′klĭk ăr′ə-măt′ĭk hī′drə-kar′bənz)

Polycyclic aromatic hydrocarbons (PAHs) are a group of over 100 different chemicals that are formed during the incomplete burning of coal, oil and gas, garbage, or other organic substances like tobacco or charbroiled meat. PAHs are usually found as a mixture containing two or more of these compounds, such as soot.

Some PAHs are manufactured. These pure PAHs usually exist as colorless, white, or pale yellow-green solids. PAHs are found in coal tar, crude oil, creosote, and roofing tar, but a few are used in medicines or to make dyes, plastics, and pesticides.

What happens to PAHs when they enter the environment?

- PAHs enter the air mostly as releases from volcanoes, forest fires, burning coal, and automobile exhaust.
- PAHs can occur in air attached to dust particles.
- Some PAH particles can readily evaporate into the air from soil or surface waters.
- PAHs can break down by reacting with sunlight and other chemicals in the air, over a period of days to weeks.
- PAHs enter water through discharges from industrial and wastewater treatment plants.
- Most PAHs do not dissolve easily in water. They stick to solid particles and settle to the bottoms of lakes or rivers.
- Microorganisms can break down PAHs in soil or water after a period of weeks to months.
- In soils, PAHs are most likely to stick tightly to particles; certain PAHs move through soil to contaminate underground water.
- PAH contents of plants and animals may be much higher than PAH contents of soil or water in which they live.

How might I be exposed to PAHs?

- Breathing air containing PAHs in the workplace of coking, coal-tar, and asphalt production plants; smokehouses; and municipal trash incineration facilities.
- Breathing air containing PAHs from cigarette smoke, wood smoke, vehicle exhausts, asphalt roads, or agricultural burn smoke.
- Coming in contact with air, water, or soil near hazardous waste sites.
- Eating grilled or charred meats; contaminated cereals, flour, bread, vegetables, fruits, meats; and processed or pickled foods.
- Drinking contaminated water or cow's milk.

- Nursing infants of mothers living near hazardous waste sites may be exposed to PAHs through their mother's milk.

How can PAHs affect my health?

Mice that were fed high levels of one PAH during pregnancy had difficulty reproducing and so did their offspring. These offspring also had higher rates of birth defects and lower body weights. It is not known whether these effects occur in people.

Animal studies have also shown that PAHs can cause harmful effects on the skin, body fluids, and ability to fight disease after both short- and long-term exposure. But these effects have not been seen in people.

How likely are PAHs to cause cancer?

The Department of Health and Human Services (DHHS) has determined that some PAHs may reasonably be expected to be carcinogens.

Some people who have breathed or touched mixtures of PAHs and other chemicals for long periods of time have developed cancer. Some PAHs have caused cancer in laboratory animals when they breathed air containing them (lung cancer), ingested them in food (stomach cancer), or had them applied to their skin (skin cancer).

Is there a medical test to show whether I've been exposed to PAHs?

In the body, PAHs are changed into chemicals that can attach to substances within the body. There are special tests that can detect PAHs attached to these substances in body tissues or blood. However, these tests cannot tell whether any health effects will occur or find out the extent or source of your exposure to the PAHs. The tests aren't usually available in your doctor's office because special equipment is needed to conduct them.

Has the federal government made recommendations to protect human health?

The Occupational Safety and Health Administration (OSHA) has set a limit of 0.2 milligrams of PAHs per cubic meter of air (0.2 mg/m^3). The OSHA Permissible Exposure Limit (PEL) for mineral oil mist that contains PAHs is 5 mg/m^3 averaged over an 8-hour exposure period.

The National Institute for Occupational Safety and Health (NIOSH) recommends that the average workplace air levels for coal tar products not exceed 0.1 mg/m^3 for a 10-hour workday, within a 40-hour workweek. There are other limits for workplace exposure for things that contain PAHs, such as coal, coal tar, and mineral oil.

Glossary

Carcinogen: A substance that can cause cancer.

Ingest: Take food or drink into your body.

References

Agency for Toxic Substances and Disease Registry (ATSDR). 1995. Toxicological profile for polycyclic aromatic hydrocarbons. Atlanta, GA: U.S. Department of Health and Human Services, Public Health Service.

Where can I get more information? For more information, contact the Agency for Toxic Substances and Disease Registry, Division of Toxicology, 1600 Clifton Road NE, Mailstop F-32, Atlanta, GA 30333. Phone: 1-888-422-8737, FAX: 770-488-4178. ToxFAQs Internet address via WWW is http://www.atsdr.cdc.gov/toxfaq.html ATSDR can tell you where to find occupational and environmental health clinics. Their specialists can recognize, evaluate, and treat illnesses resulting from exposure to hazardous substances. You can also contact your community or state health or environmental quality department if you have any more questions or concerns.

Vinyl Chloride - ToxFAQs™

CAS # 75-01-4

This fact sheet answers the most frequently asked health questions (FAQs) about vinyl chloride. For more information, call the CDC Information Center at 1-800-232-4636. This fact sheet is one in a series of summaries about hazardous substances and their health effects. It is important you understand this information because this substance may harm you. The effects of exposure to any hazardous substance depend on the dose, the duration, how you are exposed, personal traits and habits, and whether other chemicals are present.

HIGHLIGHTS: Exposure to vinyl chloride occurs mainly in the workplace. Breathing high levels of vinyl chloride for short periods of time can cause dizziness, sleepiness, unconsciousness, and at extremely high levels can cause death. Breathing vinyl chloride for long periods of time can result in permanent liver damage, immune reactions, nerve damage, and liver cancer. This substance has been found in at least 616 of the 1,662 National Priority List (NPL) sites identified by the Environmental Protection Agency (EPA).

What is vinyl chloride?

Vinyl chloride is a colorless gas. It burns easily and it is not stable at high temperatures. It has a mild, sweet odor. It is a manufactured substance that does not occur naturally. It can be formed when other substances such as trichloroethane, trichloroethylene, and tetrachloroethylene are broken down. Vinyl chloride is used to make polyvinyl chloride (PVC). PVC is used to make a variety of plastic products, including pipes, wire and cable coatings, and packaging materials.

Vinyl chloride is also known as chloroethene, chloroethylene, and ethylene monochloride.

What happens to vinyl chloride when it enters the environment?

- Liquid vinyl chloride evaporates easily. Vinyl chloride in water or soil evaporates rapidly if it is near the surface.
- Vinyl chloride in the air breaks down in a few days to other substances, some of which can be harmful.
- Small amounts of vinyl chloride can dissolve in water.
- Vinyl chloride is unlikely to build up in plants or animals that you might eat.

How might I be exposed to vinyl chloride?

- Breathing vinyl chloride that has been released from plastics industries, hazardous waste sites, and landfills.
- Breathing vinyl chloride in air or during contact with your skin or eyes in the workplace.
- Drinking water from contaminated wells.

How can vinyl chloride affect my health?

Breathing high levels of vinyl chloride can cause you to feel dizzy or sleepy. Breathing very high levels can cause you to pass out, and breathing extremely high levels can cause death.

Some people who have breathed vinyl chloride for several years have changes in the structure of their livers. People are more likely to develop these changes if they breathe high levels of vinyl chloride. Some people who work with vinyl chloride have nerve damage and develop immune reactions. The lowest levels that produce liver changes, nerve damage, and immune reaction in people are not known. Some workers exposed to very high levels of vinyl chloride have problems with the blood flow in their hands. Their fingers turn white and hurt when they go into the cold.

The effects of drinking high levels of vinyl chloride are unknown. If you spill vinyl chloride on your skin, it will cause numbness, redness, and blisters.

Animal studies have shown that long-term exposure to vinyl chloride can damage the sperm and testes.

Vinyl Chloride

CAS # 75-01-4

How likely is vinyl chloride to cause cancer?

The U.S. Department of Health and Human Services (DHHS) has determined that vinyl chloride is a known carcinogen. Studies in workers who have breathed vinyl chloride over many years showed an increased risk of liver, brain, lung cancer, and some cancers of the blood have also been observed in workers.

How can vinyl chloride affect children?

It has not been proven that vinyl chloride causes birth defects in humans, but studies in animals suggest that vinyl chloride might affect growth and development. Animal studies also suggest that infants and young children might be more susceptible than adults to vinyl chloride-induced cancer.

How can families reduce the risk of exposure to vinyl chloride?

Tobacco smoke contains low levels of vinyl chloride, so limiting your family's exposure to cigarette or cigar smoke may help reduce their exposure to vinyl chloride.

Is there a medical test to determine whether I've been exposed to vinyl chloride?

The results of several tests can sometimes show if you have been exposed to vinyl chloride. Vinyl chloride can be measured in your breath, but the test must be done shortly after exposure. This is not helpful for measuring very low levels of vinyl chloride.

The amount of the major breakdown product of vinyl chloride, thiodiglycolic acid, in the urine may give some information about exposure. However, this test must be done shortly after exposure and does not reliably indicate the level of exposure.

Has the federal government made recommendations to protect human health?

Vinyl chloride is regulated in drinking water, food, and air. The EPA requires that the amount of vinyl chloride in drinking water not exceed 0.002 milligrams per liter (mg/L) of water.

The Occupational Safety and Health Administration (OSHA) has set a limit of 1 part vinyl chloride per 1 million parts of air (1 ppm) in the workplace.

The Food and Drug Administration (FDA) regulates the vinyl chloride content of various plastics. These include plastics that carry liquids and plastics that contact food. The limits for vinyl chloride content vary depending on the nature of the plastic and its use.

References

Agency for Toxic Substances and Disease Registry (ATSDR). 2006. Toxicological Profile for Vinyl Chloride (Update). Atlanta, GA: U.S. Department of Health and Human Services, Public Health Service.

Where can I get more information?

For more information, contact the Agency for Toxic Substances and Disease Registry, Division of Toxicology and Human Health Sciences, 1600 Clifton Road NE, Mailstop F-57, Atlanta, GA 30329-4027.

Phone: 1-800-232-4636.

ToxFAQs™ Internet address via WWW is http://www.atsdr.cdc.gov/toxfaqs/index.asp.

ATSDR can tell you where to find occupational and environmental health clinics. Their specialists can recognize, evaluate, and treat illnesses resulting from exposure to hazardous substances. You can also contact your community or state health or environmental quality department if you have any more questions or concerns.

ATSDR
AGENCY FOR TOXIC SUBSTANCES AND DISEASE REGISTRY

1,1,1-TRICHLOROETHANE

CAS # 71-55-6

Division of Toxicology and Environmental Medicine ToxFAQs™ July 2006

This fact sheet answers the most frequently asked health questions (FAQs) about 1,1,1-trichloroethane. For more information, call the ATSDR Information Center at 1-888-422-8737. This fact sheet is one in a series of summaries about hazardous substances and their health effects. It is important you understand this information because this substance may harm you. The effects of exposure to any hazardous substance depend on the dose, the duration, how you are exposed, personal traits and habits, and whether other chemicals are present.

HIGHLIGHTS: Exposure to 1,1,1-trichloroethane usually occurs by breathing contaminated air. It is found in building materials, cleaning products, paints, and metal degreasing agents. You are not likely to be exposed to large enough amounts to cause adverse health effects. Inhaling high levels of 1,1,1-trichloroethane can cause you to become dizzy and lightheaded. Exposure to much higher levels can cause unconsciousness and other effects. This substance has been found in at least 823 of the 1,662 National Priorities List sites identified by the Environmental Protection Agency (EPA).

What is 1,1,1-trichloroethane?

1,1,1-Trichloroethane is a synthetic chemical that does not occur naturally in the environment. It also is known as methylchloroform, methyltrichloromethane, trichloromethylmethane, and α–trichloromethane. Its registered trade names are chloroethene NU® and Aerothene TT®.

No 1,1,1-trichloroethane is supposed to be manufactured for domestic use in the United States after January 1, 2002 because it affects the ozone layer. 1,1,1-Trichloroethane had many industrial and household uses, including use as a solvent to dissolve other substances, such as glues and paints; to remove oil or grease from manufactured metal parts; and as an ingredient of household products such as spot cleaners, glues, and aerosol sprays.

What happens to 1,1,1-trichloroethane when it enters the environment?

❏ Most of the 1,1,1-trichloroethane released into the environment enters the air, where it lasts for about 6 years.

❏ Once in the air, it can travel to the ozone layer where sunlight can break it down into chemicals that may reduce the ozone layer.

❏ Contaminated water from landfills and hazardous waste sites can contaminate surrounding soil and nearby surface water or groundwater.

❏ From lakes and rivers, most of the 1,1,1-trichloroethane evaporates quickly into the air.

❏ Water can carry 1,1,1-trichloroethane through the soil and into the groundwater where it can evaporate and pass through the soil as a gas, then be released to the air.

❏ Organisms living in soil or water may also break down 1,1,1-trichloroethane.

❏ It will not build up in plants or animals.

How might I be exposed to 1,1,1-trichloroethane?

❏ Breathing 1,1,1-trichloroethane in contaminated outdoor and indoor air. Because 1,1,1-trichloroethane was used so frequently in home and office products, you are likely to be exposed to higher levels indoors than outdoors or near hazardous waste sites. However, since 2002, 1,1,1-trichloroethane is not expected to be commonly used, and therefore, the likelihood of being exposed to it is remote.

❏ In the workplace, you could have been exposed to 1,1,1-trichloroethane while using some metal degreasing agents, paints, glues, and cleaning products.

❏ Ingesting contaminated drinking water and food.

How can 1,1,1-trichloroethane affect my health?

If you breathe air containing high levels of 1,1,1-trichloroethane for a short time, you may become dizzy and lightheaded and possibly lose your coordination. These effects rapidly disappear after you stop breathing contaminated air. If you breathe in much higher levels, you may become unconscious, your blood pressure may decrease, and your heart may stop beating. Whether breathing low levels of 1,1,1-trichloroethane for a long

time causes harmful effects is not known. Studies in animals show that breathing air that contains very high levels of 1,1,1-trichloroethane damages the breathing passages and causes mild effects in the liver, in addition to affecting the nervous system. There are no studies in humans that determine whether eating food or drinking water contaminated with 1,1,1-trichloroethane could harm health. Placing large amounts of 1,1,1-trichloroethane in the stomachs of animals has caused effects on the nervous system, mild liver damage, unconsciousness, and even death. If your skin contacts 1,1,1-trichloroethane, you might feel some irritation. Studies in animals suggest that repeated exposure of the skin might affect the liver and that very large amounts may cause death. These effects occurred only when evaporation was prevented.

How likely is 1,1,1-trichloroethane to cause cancer?

Available information does not indicate that 1,1,1-trichloroethane causes cancer. The International Agency for Research on Cancer (IARC) and the EPA have determined that 1,1,1-trichloroethane is not classifiable as to its carcinogenicity in humans.

How can 1,1,1-trichloroethane affect children?

Children exposed to large amounts of 1,1,1-trichloroethane probably would be affected in the same manner as adults. In animals, it has been shown that 1,1,1-trichloroethane can pass from the mother's blood into a fetus. When pregnant mice were exposed to high levels of 1,1,1-trichloroethane in air, their babies developed more slowly than normal and had some behavioral problems. However, whether similar effects occur in humans has not been demonstrated.

How can families reduce the risk of exposure to 1,1,1-trichloroethane?

Children can be exposed to 1,1,1-trichloroethane in household products, such as adhesives and cleaners. Parents should store household chemicals out of reach of young children to prevent accidental poisonings or skin irritation. Always store household chemicals in their original labeled containers. Never store household chemicals in containers that children would find attractive to eat or drink from, such as old soda bottles. Keep your Poison Control Center's number near the phone. Sometimes older children sniff household chemicals in an attempt to get high. Your children may be exposed to 1,1,1-trichloroethane by inhaling products containing it. Talk with your children about the dangers of sniffing chemicals.

Is there a medical test to show whether I've been exposed to 1,1,1-trichloroethane?

Samples of your breath, blood, and urine can be tested to determine if you have recently been exposed to 1,1,1-trichloroethane. In some cases, these tests can estimate how much 1,1,1-trichloroethane has entered your body. To be of any value, samples of your breath or blood have to be taken within hours after exposure, and samples of urine have to be taken within 2 days after exposure. However, these tests will not tell you whether your health will be affected by exposure to 1,1,1-trichloroethane. The exposure tests are not routinely available in hospitals and clinics because they require special analytical equipment.

Has the federal government made recommendations to protect human health?

EPA regulates the levels of 1,1,1-trichloroethane that are allowable in drinking water. The highest level of 1,1,1-trichloroethane allowed in drinking water is 0.2 parts 1,1,1,-trichloroethane per 1 million parts of water (0.2 ppm).

The Occupational Safety and Health Administration (OSHA) has set a limit of 350 parts 1,1,1-trichloroethane per 1 million parts of air (350 ppm) in the workplace.

Reference

Agency for Toxic Substances and Disease Registry (ATSDR). 2006. Toxicological Profile for 1,1,1-Trichloroethane (Update). Atlanta, GA: U.S. Department of Health and Human Services, Public Health Service.

Where can I get more information? For more information, contact the Agency for Toxic Substances and Disease Registry, Division of Toxicology and Environmental Medicine, 1600 Clifton Road NE, Mailstop F-32, Atlanta, GA 30333. Phone: 1-888-422-8737, FAX: 770-488-4178. ToxFAQs Internet address via WWW is http://www.atsdr.cdc.gov/toxfaq.html. ATSDR can tell you where to find occupational and environmental health clinics. Their specialists can recognize, evaluate, and treat illnesses resulting from exposure to hazardous substances. You can also contact your community or state health or environmental quality department if you have any more questions or concerns.

1,1-Dichloroethane - ToxFAQs™

CAS # 75-34-3

This fact sheet answers the most frequently asked health questions (FAQs) about 1,1-dichloroethane. For more information, call the CDC Information Center at 1-800-232-4636. This fact sheet is one in a series of summaries about hazardous substances and their health effects. It's important you understand this information because this substance may harm you. The effects of exposure to any hazardous substance depend on the dose, the duration, how you are exposed, personal traits and habits, and whether other chemicals are present.

HIGHLIGHTS: Exposure to 1,1-dichloroethane occurs mainly from eating contaminated food, but may also occur from skin contact, breathing contaminated air, or drinking contaminated water. 1,1-Dichloroethane affects the function of the nervous system. 1,1-Dichloroethane has been found in at least 673 of the 1,699 National Priorities List sites identified by the Environmental Protection Agency (EPA)..

What is 1,1-dichloroethane?

1,1-Dichloroethane is a colorless, oily liquid with a sweet odor. It evaporates easily at room temperature and burns easily. It does not occur naturally in the environment.

1,1-Dichloroethane is used mostly as an intermediate in the manufacture of 1,1,1-trichloroethane (1,1,1-TCE). It is also used in limited amount as a solvent for cleaning and degreasing, and in the manufacture of plastic wrap, adhesives, and synthetic fiber.

What happens to 1,1-dichloroethane when they enter the environment?

- 1,1-Dichloroethane breaks down slowly in air and has the potential for long-range transport.
- 1,1-Dichloroethane does not dissolve easily in water.
- 1,1-Dichloroethane does not degrade rapidly in water. It can evaporate from the water into the air.
- 1,1-Dichloroethane does not bind strongly to soil particles, unless the organic content of the soil is high.
- Small amounts of 1,1-dichloroethane released to soil can evaporate into the air or move into ground water.
- 1,1-Dichloroethane is not expected to build up in the body tissues of animals.

How might I be exposed to 1,1-dichloroethane?

- Breathing air containing 1,1-dichloroethane from industrial releases or hazardous waste sites.
- Drinking contaminated water if you live near industrial facilities or hazardous waste sites.
- Touching contaminated soil, but little will enter the body due to 1,1-dichloroethane's high volatility.

How can 1,1-dichloroethane affect my health?

High levels of 1,1-dichloroethane that cause anesthesia can cause irregular heartbeats, which is why its use as a surgical anesthetic was discontinued.

Kidney effects have been observed in cats exposed to 1,1 dichloroethane in air for long periods. However, kidney effects have not been observed in other animal species following long-term inhalation or oral exposure.

How likely is 1,1-dichloroethane to cause cancer?

A study in rats and mice found suggestive evidence that 1,1-dichloroethane may cause cancer. However, the study had several flaws and the results are not conclusive. Another long-term study in mice drinking water containing 1,1-dichloroethane did not find cancer.

1,1-Dichloroethane

CAS # 75-34-3

The Department of Health and Human Services (DHHS), the International Agency for Research on Cancer (IARC) have not evaluated the carcinogenic potential of 1,1-dichloroethane. The EPA has determined that 1,1-dichloroethane is a possible human carcinogen.

How can 1,1-dichloroethane affect children?

There are no data that describe the effects of exposure to 1,1-dichloroethane on children or young animals. Although it is likely that children would show the same health effects as adults, we don't know whether children are more susceptible than are adults to 1,1-dichloro-ethane effects.

We do not know whether 1,1-dichloroethane can produce birth defects in humans. Minor skeletal problems were observed in the fetuses of rats breathing 1,1-dichloro-ethane; decreases in body weight were also observed in the mothers.

How can families reduce the risk of exposure to 1,1-dichloroethane?

- Prevent children from playing in soil contaminated with 1,1-dichloroethane, as it may occur near a hazardous waste site that contains this substance.
- If you use drinking well water and live near a hazardous site, it may be a good idea to have the water tested for 1,1-dichloroethane and other contaminants.
- If you use bottled water, you should contact the bottler with specific questions on potential contaminants. Bottled water may be less subject to 1,1-dichloroethane contamination than tap water.

Is there a medical test to show whether I've been exposed to 1,1-dichloro-ethane?

1,1-Dichloroethane and its breakdown products (metabolites) can be measured in blood and urine. But the detection of 1,1-dichoroethane or its metabolites cannot predict the kind of health effects that might develop from that exposure. Because 1,1-dichloroethane and its metabolites leave the body fairly rapidly, the tests need to be conducted within days after exposure. These tests are not available at most doctors' offices, but can be done at a special laboratory.

Has the federal government made recommendations to protect human health?

The EPA has included 1,1-dichloroethane as a priority contaminant in the drinking water program.

The Occupational Safety and Health Administration (OSHA) set a legal limit of 100 ppm 1,1-dichloroethane in workplace air averaged over an 8-hour workday.

The National Institute for Occupational Safety and Health (NIOSH) recommends a limit of 100 ppm 1,1-dichloro-ethane in workplace air averaged over a 10-hour work day.

References

This ToxFAQs™ information is taken from the 2015 Toxicological Profile for 1,1 Dichloroethane produced by the Agency for Toxic Substances and Disease Registry, Public Health Service, U.S. Department of Health and Human Services, Public Health Service in Atlanta, GA.

Where can I get more information?

For more information, contact the Agency for Toxic Substances and Disease Registry, Division of Toxicology and Human Health Sciences, 1600 Clifton Road NE, Mailstop F-57, Atlanta, GA 30329-4027.

Phone: 1-800-232-4636.

ToxFAQs™ on the web: www.atsdr.cdc.gov/toxFAQs

ATSDR can tell you where to find occupational and environmental health clinics. Their specialists can recognize, evaluate, and treat illnesses resulting from exposure to hazardous substances. You can also contact your community or state health or environmental quality department if you have any more questions or concerns.

1,4-Dioxane - ToxFAQs™

CAS # 123-91-1

This fact sheet answers the most frequently asked health questions (FAQs) about 1,4-dioxane. For more information, call the CDC Information Center at 1-800-232-4636. This fact sheet is one in a series of summaries about hazardous substances and their health effects. It is important you understand this information because this substance may harm you. The effects of exposure to any hazardous substance depend on the dose, the duration, how you are exposed, personal traits and habits, and whether other chemicals are present.

HIGHLIGHTS: Exposure to 1,4-dioxane occurs from breathing contaminated air, ingestion of contaminated food and drinking water, and dermal contact with products such as cosmetics that may contain small amounts of 1,4-dioxane. Exposure to high levels of 1,4-dioxane in the air can result in nasal cavity, liver, and kidney damage. Ingestion or dermal contact with high levels of 1,4-dioxane can result in liver and kidney damage. 1,4-Dioxane has been found in at least 31 of 1,689 National Priorities List (NPL) sites identified by the Environmental Protection Agency (EPA).

What is 1,4-dioxane?

1,4-Dioxane is a clear liquid that easily dissolves in water. It is used primarily as a solvent in the manufacture of chemicals and as a laboratory reagent. 1,4-Dioxane is a trace contaminant of some chemicals used in cosmetics, detergents, and shampoos. However, manufacturers now reduce 1,4-dioxane from these chemicals to low levels before these chemicals are made into products used in the home.

What happens to 1,4-dioxane when it enters the environment?

- 1,4-Dioxane can be released into the air, water, and soil at places where it is produced or used as a solvent.
- In air, 1,4-dioxane rapidly breaks down into different compounds.
- In water, 1,4-dioxane is stable and does not break down.
- In soil, 1,4-dioxane does not stick to soil particles, so it can move from soil into groundwater.
- Fish and plants will not accumulate 1,4-dioxane in their tissues.

How might I be exposed to 1,4-dioxane?

- Breathing air, drinking water, or eating foods that contain 1,4-dioxane. During showering, bathing, or laundering, 1,4-dioxane in tap water may volatilize and you can be exposed to 1,4-dioxane vapors.
- Your skin may contact 1,4-dioxane when you use cosmetics, detergents, bubble baths, and shampoos containing 1,4-dioxane.

How can 1,4-dioxane affect my health?

Few studies are available that provide information about the effects of 1,4-dioxane in humans. Exposure to very high levels of 1,4-dioxane can result in liver and kidney damage and death. Eye and nose irritation was reported by people inhaling low levels of 1,4-dioxane vapors for short periods (minutes to hours).

Studies in animals have shown that breathing vapors of 1,4-dioxane affects mainly the nasal cavity, liver, and kidneys. Ingesting 1,4-dioxane or having skin contact with 1,4-dioxane also affects the liver and kidneys.

How likely is 1,4-dioxane to cause cancer?

The limited number of studies available does not show whether 1,4-dioxane causes cancer in humans. Laboratory rats that breathed vapors of 1,4-dioxane during most of their lives developed cancer inside the nose and abdominal cavity. Laboratory rats and mice that drank water containing 1,4-dioxane during most of their lives developed liver cancer; the rats also developed cancer inside the nose. Scientists are debating the degree to which the findings in rats and mice apply to exposure situations commonly encountered by people.

The (DHHS) U.S. Department of Health and Human Services considers 1,4-dioxane as reasonably anticipated to be a human carcinogen.

1,4-Dioxane

CAS # 123-91-1

How can 1,4-dioxane affect children?

There are no studies of children exposed to 1,4-dioxane. However, children might experience health problems similar to those in adults if they were exposed to high concentrations of 1,4-dioxane.

Scientists do not know whether exposure of pregnant women to 1,4-dioxane can harm the unborn child.

How can families reduce the risk of exposure to 1,4-dioxane?

1,4-Dioxane may be a contaminant in cosmetics, detergents, bath products, shampoos, and some pharmaceuticals. 1,4-Dioxane is not intentionally added, but may occur as an unintentional byproduct in some ingredients that may be listed on the product label, including: PEG, polyethylene, polyethylene glycol, polyethoxyethylene,-eth or -oxynol . Many products on the market today (foods, pharmaceuticals, cosmetic products, detergents, etc.) contain 1,4-dioxane in very small amounts. However, some cosmetics, detergents, and shampoos may contain 1,4-dioxane at levels higher than recommended by the FDA for other products. Families wishing to avoid cosmetics containing the ingredients listed above may do so by reviewing the ingredient statement that is required to appear on the outer container label of cosmetics offered for retail sale.

1,4-Dioxane has been detected in some drinking water supplies. Bottled water may be less likely to be contaminated with 1,4-dioxane, and consumers should contact the bottler with specific questions on potential contaminants.

Is there a medical test to determine whether I've been exposed to 1,4-dioxane?

1,4-Dioxane and its breakdown products can be measured in your blood and urine, and positive results indicate you have been exposed to 1,4-dioxane. These tests do not predict whether exposure to 1,4-dioxane will produce harmful health effects. The tests are not routinely available at your doctor's office because they require special equipment, but the doctor can collect the samples and send them to a special laboratory. The tests need to be conducted within days after the exposure because 1,4-dioxane and its breakdown products leave the body fairly rapidly.

Has the federal government made recommendations to protect human health?

EPA has determined that exposure to 1,4-dioxane in drinking water at concentrations of 4 milligrams per liter (4 mg/L) for one day or 0.4 mg/L for 10 days is not expected to cause any adverse effects in children.

The Occupational Safety and Health Administration (OSHA) has set a limit for of 100 parts 1,4-dioxane per 1 million parts of air (100 ppm) in the workplace.

References

Agency for Toxic Substances and Disease Registry (ATSDR). 2012. Toxicological Profile for 1,4-Dioxane. Atlanta, GA: U.S. Department of Health and Human Services, Public Health Service.

Where can I get more information?

For more information, contact the Agency for Toxic Substances and Disease Registry, Division of Toxicology and Human Health Sciences, 1600 Clifton Road NE, Mailstop F-57, Atlanta, GA 30329-4027.

Phone: 1-800-232-4636

ToxFAQs™ Internet address via WWW is http://www.atsdr.cdc.gov/toxfaqs/index.asp.

ATSDR can tell you where to find occupational and environmental health clinics. Their specialists can recognize, evaluate, and treat illnesses resulting from exposure to hazardous substances. You can also contact your community or state health or environmental quality department if you have any more questions or concerns.

APPENDIX B

COLD STRESS PROGRAM

1.0 PURPOSE & INTRODUCTION

The purpose of this document is to educate the employee about exposure to cold environments and the effects of hypothermia and other cold-related injuries. Through proper use of personal protective equipment (PPE); engineering and administrative controls; and education, cold injury, both to the extremities and the body's core temperature, can be prevented.

2.0 SCOPE

The program described herein is intended for use by employees engaged in work with the potential for exposure to cold environments. Training will be provided annually to all those potentially affected prior to the start of field work potentially involving cold exposure.

3.0 WORKING IN COLD ENVIRONMENTS

3.1 Metabolic Responses

The human body is designed to function best at a rectal temperature of 99-100 ºF. The body maintains this temperature in two ways: by gaining heat from food and muscular work; or, by losing it through radiation and sweating. By constricting blood vessels of the skin and/or shivering, the body uses its first line of cold defense.

Temperature control of the body is better understood by dividing the body into two main parts: the shell; and the core. The shell is comprised of the skin, capillaries, nerves, muscles and fat. Other internal organs such as the heart, lungs, brain and kidneys make up the core.

During exposure to cold, the skin is first affected. Blood in the peripheral capillaries is cooled, sending a signal to a portion of the brain called the hypothalamus. Regulating body temperature is one of the many basic body functions of the hypothalamus. Acting like a thermostat, adjustments are performed to maintain normal body temperatures. When a chill signal is received, two processes are begun by the hypothalamus: conserve heat already in the body and generate new heat.

Heat conservation is performed through constriction of the blood vessels in the skin (shell), thus reducing heat loss from the shell and acting as an insulator for the core. Sweat glands are also inhibited, thus preventing heat loss by evaporation.

Additional fuel for the body is provided in the form of glucose. Glucose causes the heart to beat faster, sending oxygen and glucose-rich blood to the tissue where needed. In an attempt to produce heat, the muscles rapidly contract. This process is better known as "shivering", and generates heat similarly to that created by strenuous activity, raising the body's metabolic rate.

During physical activity and fatigue, the body is more prone to heat loss. As exhaustion approaches, blood vessels can suddenly enlarge, resulting in rapid loss of heat. Exposure to extreme cold causes nerve pulses to be slowed, resulting in fumbling, sluggish and clumsy reactions.

4.0 COLD INJURIES

Cold injuries are classified into two categories: local and general. Local injuries include frostbite, frostnip, chilblain, and trenchfoot. General injuries include hypothermia and blood vessel abnormalities (genetically or chemically induced). Factors contributing to cold injury include: exposure to humidity and high winds; contact with wetness or metal; inadequate clothing; age; and general health. Allergies, vascular disease, excessive smoking and/or drinking, and certain drugs and medicines are physical conditions that can compound the effects of exposure to a cold environment.

4.1 Hypothermia

Hypothermia is a condition of reduced body temperature. Most cases develop in air temperatures between 30-50 °F, not taking wind-chill factor in consideration.

Symptoms of hypothermia are uncontrolled shivering and the sensation of cold. The heartbeat slows and sometimes becomes irregular, weakening the pulse and changing blood pressure. Changes in the body chemistry cause severe shaking or rigid muscles; vague or slow slurred speech; memory lapses; incoherence; and drowsiness. Cool skin, slow irregular breathing, low blood pressure, apparent exhaustion, and fatigue after rest can be seen before complete collapse.

As the core temperature drops, the victim can become listless, confused, and make little or no effort to keep warm. Pain in the extremities can be the first warning of dangerous exposure to cold. Severe shivering must be taken as a sign of danger. At a core body temperature of about 85 °F, serious problems develop due to significant drops in blood pressure, pulse rate, and respiration. In some cases, the victim may die.

Sedative drugs and alcohol increase the risk of hypothermia. Sedative drugs interfere with the transmission of impulses to the brain. Alcohol dilates blood vessels near the skin's surface, increasing heat loss and lowering body temperature.

Table B1 provides information on the onset of hypothermia and metabolic responses at different body temperatures.

4.2 Raynaud's Phenomenon

Raynaud's Phenomenon is the abnormal constriction of the blood vessels of the fingers on exposure to cold temperatures, resulting in blanching of the ends of the fingers. Numbness, itching, tingling, or a burning sensation may occur during related attacks. The disease is also associated with the use of vibrating hand tools in a condition sometimes called White Finger Disease. Persistent cold sensitivity, ulceration, and amputations can occur in severe cases.

4.3 Acrocyanosis

Acrocyanosis is caused by exposure to the cold and reduces the level of hemoglobin in the blood, resulting in a slightly blue, purple or gray coloring of the hands and/or feet.

4.4 Thromboangitis Obliterans

Thromboangitis obliterans is clotting of the arteries due to inflammation and fibrosis of connective tissue surrounding medium-sized arteries and veins. This is one of the many disabling diseases that can also result from tobacco use. Gangrene of the affected limb often requires amputation.

4.5 Frostbite

Frostbite is the freezing of the body tissues due to exposure to extremely low temperatures, resulting in damage to and loss of tissue. Frostbite occurs because of inadequate circulation and/or insulation, resulting in freezing of fluids around the cells of the body tissues. Most vulnerable parts of the body are the nose, cheeks, ears, fingers, and toes.

Frostbite can affect outer layers of skin or can include the tissues beneath. Damage can be serious, with permanent loss of movement in the affected parts, scarring, necrotic tissue, and amputation are all possibilities. Skin and nails that slough off can grow back.

The freezing point of the skin is about 30 °F. As wind velocity increases, heat loss is greater and frostbite will set in more rapidly.

There are three degrees of frostbite: first degree, freezing without blistering and peeling; second degree, freezing with blistering and peeling; and third degree, freezing with death of skin tissues and possibly the deeper tissues.

The following are symptoms of frostbite:

1. Skin changes color to white or grayish-yellow, progresses to reddish-violet, and finally turns black as the tissue dies;
2. Pain may be felt at first, but subsides;
3. Blisters may appear; and
4. Affected part is cold and numb.

The first symptom of frostbite is usually an uncomfortable sensation of coldness followed by numbness. Tingling, stinging, cramping, and aching feelings will be experienced by the victim. Frostbite of the outer layer of the skin has a waxy or whitish look and is firm to the touch. Cases of deep frostbite cause severe injury. The tissues are cold, pale and solid. The victim is often unaware of the frostbite until someone else observes these symptoms. It is therefore important to use the "buddy system" when working in cold environments, so that any symptoms of overexposure can be noted.

Table B2 describes the cooling power of wind on exposed flesh. This information can be used as a guide for determining equivalent chill temperatures when the wind is present in cold environments.

4.6 Trench Foot and Chilblains

Trench foot is swelling of the foot caused by long, continuous exposure to cold without freezing, combined with persistent dampness or immersion in water. Edema (swelling), tingling, itching and severe pain occurs, followed by blistering, necrotic tissue and ulcerations. Chilblains have similar symptoms as trench foot, except that other areas of the body are affected.

4.7 Frostnip

Frostnip occurs when the face or extremities are exposed to a cold wind, causing the skin to turn white.

5.0 PREVENTION OF COLD STRESS

Cold stress can be prevented through a combination of various factors: acclimation; water and salt displacement; medical screening; proper clothing selection; and training and education. Through the use of engineering controls, work practices, work/rest schedules, environmental monitoring and consideration of the wind-chill temperature, the employee can be protected.

5.1 Acclimation

Acclimation can be achieved to some degree. Sufficient exposure to cold causes the body to undergo changes to increase comfort and reduce the risk of injury. However, these changes are minor and require repeated exposure to cold and uncomfortable temperatures to induce them.

5.2 Dehydration

The dryness of cold air causes the body to lose a significant amount of water through the skin and lungs. It is essential that caffeine-free, non-alcoholic beverages be available at the worksite for fluid replacement. Dehydration also increases the risk of injury due to cold and affects blood flow to the extremities.

5.3 Diet

A well-balanced diet is important for employees working in cold environments. Diets restricted only to certain foods may not provide the necessary elements for the body to withstand cold stress, leaving the worker vulnerable.

5.4 Control Measures

When the wind chill factor results in an equivalent temperature of -26 °F, continuous exposure of the skin will not be permitted. Any worker exposed to temperatures of 36 °F or less who becomes immersed in water will be given dry clothing immediately and treated for hypothermia at the local hospital if any symptoms of hyperthermia are present. Notification of this incident will be provided to the Health and Safety Division immediately after sending the worker to the hospital.

5.5 Environmental Controls

The following are some ways that environmental controls can be used to reduce the effects of a cold environment:

1. General or spot heating should be used to increase temperature in certain areas in the workplace;
2. Warm air jets, radiant heaters or contact warm plates can be used to warm the worker's hands if fine work is to be performed with bare hands for 10 to 20 minutes or more;
3. Shield the work area if air velocity at the work Site is increased by wind, draft, or ventilating equipment;
4. Metal handles of tools and control bars should be covered with thermal insulating material at temperatures below 30 °F;
5. Unprotected metal chair seats will not be used in cold environments;
6. When appropriate and feasible, equipment and processes will be substituted, isolated, relocated, or redesigned;
7. Power tools, hoists, cranes, or lifting aids will be used to reduce the metabolic workload;

8. Heated warming shelters will be made available for continuous work being performed in an equivalent temperature of 20 °F or below and workers will be encouraged to use the shelters regularly; and
9. Administrative work practice controls.

Work practices and guidelines can be designed and developed to reduce exposure to cold stress. Some of these may include:

1. Work-rest schedules to reduce the peak of cold stress;
2. Enforce scheduled breaks;
3. Enforce intake of caffeine-free, non-alcoholic beverages;
4. Schedule work that has potential exposure to cold stress for the warmest part of the day;
5. Move work to warmer areas, whenever possible;
6. Assign extra workers for high-demand tasks;
7. Provide relief workers for other workers needing breaks;
8. Teach basic principles of recognizing and preventing cold stress;
9. Use the buddy system for work at 10 °F or below, and keep within eyeshot;
10. Allow new employees to adjust to the conditions before they work full-time in cold environments;
11. Minimize sitting and standing in one place for long periods of time; and
12. Include weight and bulkiness of clothing when estimating work performance requirements and weights to be lifted;

Table B3 provides a work/warm-up schedule for cold environments, with wind chill taken into account.

5.6 Special Considerations

Older workers and workers with circulatory problems should be extra careful in cold environments. Sufficient sleep and good nutrition are important preventive measures for maintenance tolerance to the cold. Double shifts and overtime work should be avoided when working in cold environments.

If any of the following symptoms are observed on-site, the affected worker will immediately go to warm shelter:

- Onset of heavy shivering;
- Frostnip;
- Feeling of excessive fatigue;
- Drowsiness; and
- Euphoria.

After entering the warm shelter, the outer layer of clothing should be removed. If the clothing is wet from sweat and perspiration, dry clothing should be provided. If this is not feasible, then the clothing should be loosened to allow sweat to evaporate.

Anyone working in cold environments and on prescribed medication should consult their physician concerning any possible side effects due to cold stress. Those individuals suffering from diseases and/or taking medication that interferes with normal body temperature regulation or reduces the tolerance to cold will not be allowed to work in temperatures of 30 °F or below.

6.0 PERSONAL PROTECTIVE EQUIPMENT (PPE)

In choosing PPE for cold environments, it is important to maintain airspace between the body and outer layer of clothing to retain body heat. The more air pockets, the better the insulation. The clothing should also allow for the evaporation of sweat if the skin is wet.

The most important parts of the body to protect are the feet, hands, head and face. Hands and feet become cooled most easily, because of their distance from the heart. Keeping the head covered is equally important. As much as 40% of body heat loss is through the head when it is exposed.

Ideal clothing for exposure to cold environments is made of wool, polypropylene, or other wicking fabrics. Loosely fitted clothing also aids in sweat evaporation. Recommended clothing may include the following:

1. Polypropylene under shirt and shorts under thermal underwear (preferably two-piece);
2. Wool socks;
3. Wool or thermal pants, lapped over boot tops to keep out snow and water;
4. Suspenders (belts can constrict and reduce circulation);
5. Insulated work boots, preferably waterproof. Safety toe, if necessary;
6. Wool or cotton shirt;
7. Parka;
8. Knit cap/hard hat liner;
9. Wool mittens or gloves (depending on the dexterity required); and
10. Face mask or scarf.

Dirty or greasy clothing loses much of its insulation value. Dirty clothing crushes air pockets, allowing air to escape more easily. Also, denim is not a good protective fabric. It is loosely woven and allows water to penetrate and wind to blow away body heat.

Table B1
Progressive Clinical Presentation of Hypothermia

Core Temperature		Clinical Signs
°C	°F	
37.6	99.6	"Normal" Rectal Temperature
37	98.6	"Normal" Oral Temperature
36	96.8	Metabolic rate increases in an attempt to compensate for heat loss.
35	95.0	Maximum shivering.
34	93.2	Victim conscious and responsive, with normal blood pressure.
33	91.4	Severe hypothermia below this temperature.
32	89.6	Consciousness clouded, blood pressure becomes difficult to obtain, Pupils dilated but react to light, shivering ceases.
31	87.8	
30	86.0	Progressive loss of consciousness, muscular rigidity increases, Pulse and blood pressure difficult to obtain, respiratory rate decreases
29	84.2	
28	82.4	Ventricular fibrillation possible with myocardial irritability.

Table B1
Progressive Clinical Presentation of Hypothermia

Core Temperature °C	Core Temperature °F	Clinical Signs
27	80.6	Voluntary motion ceases, pupils non-reactive to light, deep tendon and superficial reflexes absent.
26	78.8	
25	77.0	Ventricular fibrillation may occur spontaneously.
24	75.2	Pulmonary edema.
22	71.6	Maximum risk of ventricular fibrillation.
20	68.0	Cardiac standstill.
18	64.4	Lowest accidental hypothermia victim to recover.
17	62.6	Isoelectric electroencephalogram.
9	48.2	Lowest artificially cooled hypothermia patient to recover.
Presentations approximately related to core temperature. Reprinted from the January 1982 issue of American Family Physician, published by the American Academy of Family Physicians.		

Table B2
Cooling Power of Wind on Exposed Flesh as Equivalent Temperature

Estimated Wind Speed (mph)	Actual Temperature Reading (Degrees Fahrenheit)											
	50	**40**	**30**	**20**	**10**	**0**	**-10**	**-20**	**-30**	**-40**	**-50**	**-60**
	Equivalent Chill Temperature (°F)											
Calm	50	40	30	20	10	0	-10	-20	-30	-40	-50	-60
5	48	37	27	16	6	-5	-15	-26	-36	-47	-57	-68
10	40	28	16	4	-9	-24	-33	-46	-58	-70	-83	-95
15	36	22	9	-5	-18	-32	-45	-58	-72	-85	-99	-112
20	32	18	4	-10	-25	-39	-53	-67	-82	-96	-110	-121
25	30	16	0	-15	-29	-44	-59	-74	-88	-104	-118	-133
30	28	13	-2	-18	-33	-48	-63	-79	-94	-109	-125	-140

Table B2

Cooling Power of Wind on Exposed Flesh as Equivalent Temperature

Estimated Wind Speed (mph)	**Actual Temperature Reading (Degrees Fahrenheit)**											
	50	**40**	**30**	**20**	**10**	**0**	**-10**	**-20**	**-30**	**-40**	**-50**	**-60**
	Equivalent Chill Temperature (°F)											
35	27	11	-4	-20	-35	-51	-67	-82	-98	-113	-129	-145
40	26	10	-6	-21	-37	-53	-69	-85	-100	-116	-132	-148
	LITTLE DANGER In < hr with dry skin. Maximum danger of false sense of security.				INCREASING DANGER Danger from freezing of exposed flesh within one minute.			GREAT DANGER Flesh may freeze within 30 seconds.				

Developed by the U.S. Army Research Institute of Environmental Medicine, Natick, MA.

Wind speeds greater than 40 mph have little additional effect.

Trenchfoot and immersion foot may occur at any point.

Table B3
Threshold Limit Values Work/Warm-up Schedule for 4-Hour Shift

Air Temp. Sunny Sky		**No Noticeable Wind**		**5 mph Wind**		**10 mph Wind**		**15 mph Wind**		**20 mph Wind**	
˚C (approx)	**˚F (approx)**	**Max. Work Period**	**No. of Breaks**	**Max. Work Period**	**No. of Breaks**	**Max. Work Period**	**No. of Breaks**	**Max. Work Period**	**No. of Breaks**	**Max. Work Period**	**No. of Breaks**
-26˚ to -28˚	-15˚ to -19˚	(Norm. Breaks)	1	(Norm.Breaks)	1	75 min.	2	55 min.	3	40 min.	4
-29˚ to -	-20˚ to -	(Norm. Breaks)	1	75 min	2	55 min.	3	40 min.	4	30 min.	5

Table B3
Threshold Limit Values Work/Warm-up Schedule for 4-Hour Shift

Air Temp. Sunny Sky		No Noticeable Wind		5 mph Wind		10 mph Wind		15 mph Wind		20 mph Wind	
˚C (approx)	˚F (approx)	Max. Work Period	No. of Breaks	Max. Work Period	No. of Breaks	Max. Work Period	No. of Breaks	Max. Work Period	No. of Breaks	Max. Work Period	No. of Breaks
31˚	24˚										
-32˚ to -34˚	-25˚ to -29˚	75 min	2	55 min.	3	40 min.	4	30 min.	5	Non-emergency work should cease	
-35˚ to -37˚	-30˚ to -34˚	55 min.	3	40 min.	4	30 min.	5	Non-emergency work should cease			
-38˚ to -39˚	-35˚ to -39˚	40 min.	4	30 min.	5	Non-emergency work should cease					
-40˚ to -42˚	-40˚ to -44˚	30 min.	5	Non-emergency work should cease							
-43˚ & below	-45˚ & below	Non-emergency work should cease									

Notes:

Schedule applies to moderate to heavy work activity with warm-up breaks of 10 minutes in a warm location. For light to moderate work (limited physical motion), apply the schedule one step lower. For example, at -30 °F with no noticeable wind (step 4, a worker at a job with little physical movement should have a maximum work period of 40 minutes with 4 breaks in a 4 hour period.

The following is suggested as a guide for estimating wind velocity if accurate information is not available: 5 mph, light flag moves; 10 mph, light flag fully extended; 15 mph, raises newspaper sheet; 20 mph, blowing drifting snow.

If only the wind chill cooling rate is available, a rough rule of thumb for applying it rather than the temperature and wind velocity factors given above would be: 1) special warm-up breaks should be initiated at a wind-chill cooling rate of about 17 watts per square meter (W/m^2); 2) all non-emergency work should have ceased at or before a wind-chill of 2250 W/m^2. In general the warm-up schedule provided above slightly under-compensates for the wind at the warmer temperatures, assuming acclimatization and clothing appropriate for winter work. On the other hand, the chart over-compensates for the actual temperatures in the colder ranges, since windy conditions prevail at extremely low temperatures.

Threshold limit values (TLVs) apply only for workers in dry clothing.

Adapted from Occupational Health and Safety Division, Saskatchewan Department of Labor.

APPENDIX C

HEAT STRESS PROGRAM

1.0 INTRODUCTION

Heat stress is one of the most common (and potentially serious) illnesses at job sites. Although it is caused by a number of interacting factors, donning the proper personal protective equipment (PPE) puts the worker at a much higher risk during warmer environmental conditions. The results of heat stress range from fatigue to serious illness or death. Through regular fluid replacement and other preventive measures, heat stress can be controlled, leading to increased efficiency and a higher level of safety on the job.

2.0 PURPOSE

The purpose of this document is to create an awareness among employees concerning the body's physiologic responses to heat, different types of heat stress that can affect the body, recognition of signs and symptoms, first aid treatment, and preventive measures.

3.0 SOURCES OF HEAT

There are two sources of heat that are important to anyone working in a hot environment:

- Internally generated metabolic heat
- Externally imposed environmental heat

4.0 PHYSIOLOGIC RESPONSES TO HEAT

The human body maintains a fairly constant internal temperature, even though it is exposed to varying environmental temperatures. To keep internal body temperatures within safe limits, the body must get rid of its excess heat, primarily through varying the rate and amount of blood circulation through the skin and the release of fluid onto the skin by the sweat glands. These automatic responses usually occur when the temperature of the blood exceeds 98.6 °F and are kept in balance and controlled by the brain. In this process of lowering internal body temperature, the heart begins to pump more blood, blood vessels expand to accommodate the increased flow, and the microscopic blood vessels (capillaries) which thread through the upper layers of the skin begin to fill with blood. The blood circulates closer to the surface of the skin, and the excess heat is lost to the cooler environment.

If the heat loss from increased blood circulation through the skin is not adequate, the brain continues to sense overheating and signals the sweat glands in the skin to release large quantities of sweat onto the skin surface. Evaporation of sweat cools the skin, eliminating large quantities of heat from the body.

As environmental temperatures approach normal skin temperature, cooling of the body becomes more difficult. If air temperature is as warm as or warmer than the skin, blood brought to the body surface cannot lose its heat. Under these conditions, the heart continues to pump blood to the body surface, the sweat gland pour liquids containing electrolytes onto the surface of the skin, and the evaporation of the sweat becomes the principal effective means of maintaining a constant body temperature. Sweating does not cool the body unless the moisture is removed from the skin by evaporation. In high humidity, the evaporation of sweat from the skin is decreased and the body's efforts to maintain an acceptable body temperature may be significantly impaired. These conditions adversely affect an individual's ability to work in the hot environment. With so much blood going to the external surface of the body, relatively less goes to the active muscles, the brain, and other internal organs; strength declines; and fatigue occurs

sooner than it would otherwise. Alertness and mental capacity also may be affected. Workers who must perform delicate or detailed work may find their accuracy suffering, and others may find their comprehension and retention of information lowered.

When temperature differences exist between two or more bodies, heat can be transferred. Net heat transfer is always from the body (or object) of higher temperature to that of lower temperature and occurs by one or more of the following mechanisms:

- Conduction. The transfer of heat from one point to another within the body, or from one body to another when both bodies are in physical contact. Conduction can be a localized source of discomfort from direct physical contact with a hot or cold surface, it is normally not a significant factor to total heat stress.
- Convection. The transfer of heat from one place to another by moving gas or liquid. Natural convection results from differences in density caused by temperature differences. Thus warm air is less dense than cool air.
- Radiation. The process by which energy, electromagnetic (visible and infrared), is transmitted through space without the presence or movement of matter in or through this space.

5.0 PREDISPOSING FACTORS TO HEAT STRESS

Factors that may predispose an individual to heat stress vary according to the individual. These factors include:

- Lack of physical fitness;
- Lack of acclimatization;
- Age;
- Dehydration;
- Obesity;
- Drug/alcohol abuse;
- Infection;
- Sunburn;
- Diarrhea; and
- Chronic disease.

Predisposing factors and an increased risk of excessive heat stress are both directly influenced by the type and amount of PPE worn. PPE adds weight and bulk, reduces the body's access to normal heat exchange mechanisms (evaporation, convection and radiation) and increases energy expenditure.

6.0 FORMS OF HEAT STRESS AND FIRST AID

The following excerpts were taken from NIOSH Publication No. 86-112, Working in Hot Environments:

"Excessive exposure to a hot work environment can bring about a variety of heat-induced disorders. Among the most common are heat stroke, heat exhaustion, heat cramps, fainting and heat rash.

6.1 Heat Stroke

Heat Stroke is the most serious of health problems associated with working in hot environments. It occurs when the body's temperature regulatory system fails and sweating becomes inadequate.

The body's only effective means of removing excess heat is compromised with little warning to the victim that a crisis stage has been reached.

A heat stroke victim's skin is hot, usually dry, red or spotted. Body temperature is usually 105 °F or higher, and the victim is mentally confused, delirious perhaps in convulsions, or unconscious. Unless the victim receives quick and appropriate treatment, death can occur.

Individuals with signs or symptoms of heat stroke require immediate hospitalization. First aid should be immediately administered. This includes removing the victim to a cool area, thoroughly soaking the clothing with water, and vigorously fanning the body to increase cooling. Further treatment, at a medical facility, should be directed to the continuation of the cooling process and the monitoring of complications that often accompany heat stroke. Early recognition and treatment are the only means of preventing permanent brain damage or death.

6.2 Heat Exhaustion

Heat exhaustion includes several clinical disorders having symptoms that may resemble the early symptoms of heat stroke. Heat exhaustion is caused by the loss of large amounts of fluid by sweating, sometimes with excessive loss of salt. A worker suffering from heat exhaustion still sweats but experiences weakness or fatigue, giddiness, nausea or headache. In more serious cases, the victim may vomit or lose consciousness. The skin is clammy and moist, the complexion is pale or flushed, and the body temperature is normal or only slightly elevated.

In most cases, treatment involves having the victim rest in a cool place and drink plenty of liquids. Victims with mild cases of heat exhaustion usually recover spontaneously with this treatment. Those with severe cases may require extended care for several days. There are no known permanent effects.

6.3 Heat Cramps

Heat cramps are painful spasms of the muscles that occur among those who sweat profusely in heat, drink large quantities of water, but do not adequately replace the body's salt loss. The drinking of large amounts of water tends to dilute the body's fluids, while the body continues to lose salt. Shortly after, the low salt level in the muscles causes painful cramps. The affected muscles may be part of the arms, legs, or abdomen; but tired muscles (those used in performing the work) are usually the ones most susceptible to cramps. Cramps may occur during or after work hours and may be relieved by taking salted liquids by mouth.

6.4 Fainting

Fainting occurs in workers not accustomed to hot environments and who stand erect and immobile in the heat.

With enlarged blood vessels in the skin and in the lower part of the body due to the body's attempts to control internal temperature, blood may pool there rather than return to the heart to be pumped to the brain. Upon lying down, the worker should soon recover. By moving around, and thereby preventing blood from pooling, the patient can prevent further fainting.

6.5 Heat Rash (Prickly Heat)

Heat rash, also known as prickly heat, is likely to occur in hot, humid environments where sweat is not as easily removed from the surface of the skin by evaporation and the skin remains wet most of the time. The sweat ducts become plugged, and a skin rash soon appears. When the rash

is extensive or when it is complicated by infection, prickly heat can be very uncomfortable and may reduce a worker's performance. The worker can prevent this condition by resting in a cool place part of each day and by regularly bathing and drying the skin."

7.0 SELECTION OF PERSONAL PROTECTIVE EQUIPMENT (PPE)

During work periods where the increased risk of heat stress exists, each item's benefit will be carefully evaluated. Once the PPE is chosen, safe work durations/rest periods will be determined based on the following conditions:

- Anticipated work rate;
- Ambient temperature and humidity; and
- Level of protection.

8.0 PREVENTION OF HEAT STRESS

Prevention of heat stress will be addressed in the following manner:

- Adjustment of work schedules.
- Modify work/rest schedules.
    1. Enforce work slowdowns, as needed.
    2. Rotate personnel to minimize overstress or overexertion.
    3. When possible, work will be scheduled and performed during cooler hours.
- Provide shelter or shaded areas to protect personnel during rest periods.
- Maintain worker's body fluids at normal levels.
    1. Drink approximately 12 to 16 ounces of non-caffeinated liquid (preferably water, Gatorade or equivalent) prior to the start of work. Caffeinated fluids act to dehydrate the worker.
    2. Workers will be urged to drink a cup or two every 15 to 20 minutes, or at each break. A total of 1 to 1.5 gallons of water per individual per day are recommended for fluid replacement under heat stress conditions, but more may be required.
- Encourage physical fitness among the workers.
- Gradually acclimatize workers on Site to help build up an "immunity" to the conditions.
    1. Heat acclimatization can usually be induced in 5 to 7 days of exposure at a hot job. For workers with previous experience with the job, acclimatization will include exposures of 50% for day 1, 60% for day 2, 80% for day 3, and 100% for the remaining additional days.
- Provide cooling devices during prolonged work or severe heat exposure.
    1. Supply field showers or hose down areas.
    2. Supply personnel with cooling jackets, vests, and suits.
- Train workers in recognition and treatment of heat stress.
- Use of the buddy system that depends on the recognition of signs and symptoms of heat stress.
- Identification of heat-intolerant individuals through medical screening.

APPENDIX D

INCIDENT REPORT FORM

Incident Report Form

Supervisor's Name: _____

Basic Rules for Accident Investigation

- Find the cause to prevent future accidents - Use an unbiased approach during investigation.
- Interview witnesses & injured employees at the scene - conduct a walkthrough of the accident.
- Conduct interviews in private - Interview one witness at a time.
- Get signed statements from all involved.
- Take photos or make a sketch of the accident scene.
- What hazards are present - what unsafe acts contributed to accident?
- Ensure hazardous conditions are corrected immediately.

Date & Time		**Location**	
Task Performed		**Witnesses**	
Resulted In	___ **Injury** ___ **Fatality** ___ **Property Damage**	**Property Damage**	
Injured		**Injured**	
Describe Accident Facts & Events			

Supervisors Root Cause Analysis (Check ALL that apply to the accident)			
Unsafe Act		**Unsafe Conditions**	
Improper work technique		Poor workstation design	
Safety rule violation		Unsafe operation method	
Improper PPE or PPE not used		Improper maintenance	
Operating without authority		Lack of direct supervision	
Failure to warn or secure		Insufficient training	
Operating at improper speeds		Lack of experience	
By-passing Safety device		Insufficient knowledge of job	

Protective equipment not in use		Slippery conditions	
Improper loading or placement		Excessive noise	
Improper lifting		Inadequate guarding of hazards	
Servicing Machinery in motion		Defective tools/equipment	
Horseplay		Poor housekeeping	
Drug or alcohol use		Insufficient lighting	
Unsafe Acts require a written warning and re-training before the employee resumes work.			
Date		**Date**	
Retraining Assigned		**Unsafe Condition Guarded**	
Retraining Completed		**Unsafe Condition Corrected**	
Supervisor Signature		**Supervisor Signature**	

NEW 470 PROJECT

12 ECKFORD STREET

BROOKLYN, KINGS COUNTY, NEW YORK

Community Air Monitoring Plan

AKRF Project Number: 12306
NYSDEC Site Number: C224242

Prepared for:

New York State Department of Environmental Conservation
Remedial Bureau B
625 Broadway
Albany, New York 12233

On Behalf Of:

New 470 LLC
100 Comac Street
Ronkonkoma, New York 11779

Prepared by:

AKRF, Inc.
440 Park Avenue South, 7th Floor
New York, New York 10016
(212) 696-0670

DECEMBER 2019

TABLE OF CONTENTS

1.0 INTRODUCTION 1
1.1 Purpose and Objectives 1
1.2 Operations to be Monitored 2
2.0 COMMUNITY AIR MONITORING PROCEDURES 2
2.1 Volatile Organic Compound (VOC) Direct Reading Monitoring 2
2.2 Particulate (Dust) Direct Reading Monitoring 3
2.3 Odor Monitoring 3
2.4 Equipment Operational Requirements 3
3.0 ENHANCED MONITORING/CONTROL PROCEDURES 4
4.0 VOLATILE ORGANIC COMPOUND (VOC), PARTICULATE, AND ODOR CONTROLS 4
4.1 Volatile Organic Compound (VOC) Controls 5
4.2 Airborne Particulate Controls 5
4.3 Odor Controls 5
5.0 COMMUNITY AIR MONITORING RECORDKEEPING 5

TABLES

Table 1 – Community Air Monitoring Summary

1.0 INTRODUCTION

This Community Air Monitoring Plan (CAMP) provides details for the work zone perimeter air monitoring during the implementation of field activities that may be conducted at the New 470 Project site, hereinafter referred to as the Site. The Site is located at 12 Eckford Street in Brooklyn, New York and is identified on the New York City Tax Map as Brooklyn Borough Block 2714, Lot 33. The 0.5123-acre Site is currently enrolled in the New York State (NYS) Brownfield Cleanup Program (BCP) (Site No. C224242), which is administered by New York State Department of Environmental Conservation (NYSDEC). The Site was investigated and remediated as a Track 4 cleanup in accordance with Brownfield Cleanup Agreement (BCA) Index No. C224242-10-16, which was executed on December 1, 2016. A BCA Amendment Application was submitted to NYSDEC in July 2019 to document the changes to the BCA, including: (1) the alteration of the northern Site boundary, which resulted in an acreage increase from 0.497 acre to 0.5123 acre; and (2) the merger of former Lot 3 and the portion of former Lot 1 comprising the Site into Lot 33.

Details on the Site environmental history and remedial activities performed are provided in the Site Management Plan (SMP). Engineering Controls (ECs) have been incorporated into the Site remedy to control exposure to remaining contamination during the use of the Site to ensure protection of public health and the environment. The following ECs have been implemented: (1) a composite cover system; (2) a vapor barrier; (3) an active sub-slab depressurization system (SSDS); and (4) a soil vapor extraction (SVE) system (SVES).

An Environmental Easement (EE) granted to the NYSDEC, and recorded with the Kings County Clerk, requires compliance with the SMP and all ECs and Institutional Controls (ICs) placed on the Site. The ICs place restrictions on Site use, and mandate operation, maintenance, monitoring and reporting measures for all ECs and ICs. The SMP specifies the methods necessary to ensure compliance with all ECs and ICs required by the EE for contamination that remains at the Site. The SMP has been approved by NYSDEC, and compliance with the SMP is required by the grantor of the EE and the grantor's successors and assigns. The SMP may be revised only with the approval of the NYSDEC. This CAMP is an appendix to the SMP.

1.1 Purpose and Objectives

The principal purpose of this CAMP is to monitor air quality in the vicinity of any intrusive activities (i.e., below the Site composite cover system). This CAMP consists of monitoring airborne particulates, vapors, and nuisance odors on a periodic/roving basis. Monitoring at the Site will include real-time air monitoring for airborne particulate matter and volatile organic compounds (VOCs), observations for visible emissions and odors, inspection and monitoring of the contractor's work practices, and reporting to the NYSDEC and the New York State Department of Health (NYSDOH). Monitoring will be performed during any slab-intrusive activities.

Principal objectives of this CAMP are as follows:

- Monitor VOC vapors such that vapors associated with the remedial actions are maintained below action levels.
- Monitor airborne particulate concentrations of particulate matter 10 micrometers of less in diameter (PM_{10}), such that concentrations are maintained below action levels.
- Monitor VOCs and visible emissions so that vapors and particulates from the excavation operations do not leave the Site.

- Monitor for nuisance odors to prevent odors that could impact the surrounding community.
- Notify construction personnel and make corrective actions in the event that an exceedance of the monitoring parameter(s) occurs.

1.2 Operations to be Monitored

The remedial actions to be performed under this CAMP consist of air monitoring to address the community health and safety concerns during any intrusive activities after completion of the Site remedy, under the direction of AKRF. The locations and frequency of monitoring will be established on a task-by-task basis depending on the extent and location of the intrusive relative work to publicly-accessible areas.

2.0 COMMUNITY AIR MONITORING PROCEDURES

Work zone air monitoring will be performed continuously during all invasive work in accordance with the Health and Safety Plan (HASP). Community air monitoring will be performed periodically (at a minimum once per hour) on a roving basis around any active intrusive work areas. Community air monitoring will be upgraded to continuous monitoring using permanent stations if action levels are encountered within the work zone or during roving periodic community air monitoring.

The action levels specified herein require increased monitoring, corrective actions to abate emissions (see Sections 3.0 and 4.0), and/or work shutdown. A community air monitoring summary, including action levels and appropriate response actions for exceedances of action levels, is provided as Table 1.

2.1 Volatile Organic Compound (VOC) Direct Reading Monitoring

VOC monitoring equipment will consist of a photoionization detector (PID) capable of detecting potential VOCs found in disturbed soil. The monitoring equipment will be calibrated on a daily basis and documented in a dedicated field log book. The instrument will be capable of calculating 15-minute running average concentrations, which will be compared to the prescribed action levels.

Readings will be subtracted from the background concentrations, to be measured each day prior to the start of work, to establish concentrations reflective of work activities during the periods between collection of background readings.

The 15-minute average concentrations will be compared to the following:

- If the ambient air concentration of total organic vapors exceeds 5 parts per million (ppm) above background for the 15-minute average, work activities must be temporarily halted and monitoring continued. If the total organic vapor level readily decreases (per instantaneous readings) below 5 ppm over background, work activities can resume with measures taken to reduce vapors and continue monitoring.
- If total organic vapor levels persist at levels in excess of 5 ppm over background, work activities must be halted, the source of vapors identified, corrective actions taken to abate emissions, and monitoring continued. If the organic vapor level is repeatedly over 25 ppm above background, activities must be shutdown and the engineering controls and the Site work plan re-evaluated.

2.2 Particulate (Dust) Direct Reading Monitoring

Particulate monitoring will be performed using real-time aerosol or particulate monitoring equipment capable of measuring PM_{10} and capable of integrating over a period of 15 minutes (or less) for comparison to the airborne particulate action level established below. The dust monitor will be equipped with an alarm to indicate exceedance of the action level, and will be zeroed on a daily basis (and more frequently as needed) in accordance with the manufacturer's operating instructions and documented in a dedicated logbook. In addition, fugitive dust migration will be visually assessed during all work activities.

The action level will be established at 0.15 milligram per cubic meter (mg/m^3) above background, over 15-minute time weighted average (TWA). While conservative, this short-term interval will provide a real-time assessment of on-site air quality to assure both health and safety.

The 15-minute average concentrations will be compared to the following:

- If the particulate measurement is between 0.1 mg/m^3 and 0.15 mg/m^3 above the background level, additional dust suppression techniques will be implemented to reduce the generation of fugitive dust and corrective action taken to protect Site personnel and reduce the potential for contaminant migration.
- If the dust suppression measures being utilized at the Site do not lower particulates to an acceptable level (e.g., below 0.15 mg/m^3 above the background level, and no visible dust from the work area), work will be suspended until appropriate corrective measures are implemented to remedy the situation.

2.3 Odor Monitoring

Subsurface excavation work exposing contaminated materials may cause odors to be detectable. This may cause concern among the on-site workers, visitors to the Site, and the nearby community regarding potential health risks. Health risks or the potential for health risks do not rely strictly on detectable odors. However, controlling odor emissions from a site can allay public fears about health risks and provide additional means of controlling nuisance emissions. Periodic walk-around monitoring will be performed to observe perceptible odor that may be a nuisance to nearby sensitive receptors. If perceptible odors are noted adjacent to a nearby receptor or a complaint is received, work will be suspended until appropriate corrective measures are implemented to remedy the situation.

2.4 Equipment Operational Requirements

The air monitoring equipment must be operated by trained and qualified personnel. Personnel who perform air monitoring functions described in this section shall be experienced in the use of field air monitoring equipment, as well as the air monitoring procedures described above. There must also be appropriate staff (chemist, industrial hygienist, engineer or environmental scientist) for assessing the results of air monitoring and advising field personnel of air quality considerations.

3.0 ENHANCED MONITORING/CONTROL PROCEDURES

The following enhanced procedures would be implemented in the event that the building is occupied during intrusive work to minimize exposure to potential sub-slab or intra-slab vapors:

1. Prior to the start of any intrusive work inside the Site building, the total VOC concentration will be measured from perimeter air monitoring zones within the site building as a background reading.
2. If a PID reading of 5 ppm or less is registered in the perimeter air monitoring zones and 10 ppm or less in the work zone, the intrusive work will proceed with no further engineering controls unless further monitoring during the intrusive work results in a PID reading greater than 5 ppm. Continuous work zone and periodic community air monitoring will be performed in accordance with the HASP and as described in Section 2.1 and the work area will be cordoned off with cones, caution tape, or similar barriers to pedestrians.
3. If a PID reading of greater than 5ppm is measured during the initial Site background reading, the source of the elevated concentration will be pursued. Inspections of the aboveground components of the SVES and SSDS will be conducted to identify and repair any system malfunctions or problems (i.e., leaks, cracks, collection of condensation, etc.). Non-routine maintenance will be performed to repair any problems or incidents, or make adjustments to the system.
4. If intrusive, subsurface work occurs during times the buildings are occupied and elevated readings are noted during work zone or community air monitoring, engineering controls to control vapors would be implemented, as described below, for the areas with elevated vapors measured during the baseline monitoring or during monitoring of the invasive work.
    a. Access to work zones will be temporarily limited to workers with Hazardous Waste Operations and Emergency Response (HAZWOPER) training and site-specific briefing in accordance with the HASP. Any open wall penetrations will be sealed using products such as caulk or expandable foam.
    b. All personnel entering the work zone will upgrade personal protective equipment (PPE) to Level C when appropriate in accordance with the HASP. Penetrations to the surface slab would be repaired with concrete, caulk, caps or other construction materials to seal the opening, as appropriate.

These procedures will be repeated at each intrusive work area and will be documented in accordance with Section 5.0.

4.0 VOLATILE ORGANIC COMPOUND (VOC), PARTICULATE, AND ODOR CONTROLS

The information and procedures presented in this section will be used for VOC, particulate, and odor control during activities summarized in Section 1.1. The construction manager for the project will be responsible for implementing these procedures based on the air monitoring results and required action levels described in Table 1. The information and procedures that are to be used for VOC, particulate, and odor control are presented in the following sub-sections.

4.1 Volatile Organic Compound (VOC) Controls

Control of VOCs during excavation work or other soil disturbance activities will consist of the construction manager implementing one or more of the following methods or measures:

- Covering stockpile or other material staging areas;
- Covering the exposed excavation/exposed subsurface areas;
- Backfilling or capping the exposed area;
- Wetting exposed contaminated material; and
- Isolating heating, ventilation and air conditioning (HVAC) system in the active work area.

4.2 Airborne Particulate Controls

The primary measure of preventing exposure to dust during excavation or other soil/fill disturbance activities will be wetting techniques. The Contractor will provide the controls (wet techniques) or other techniques (e.g., covering exposed soil surfaces, limiting active work areas) to control particulate generation during work tasks that have the potential for generating airborne particulates. Particulate controls involving the use of water (wetting or water spraying) will be employed at potential particulate generating activity areas as follows:

- Before each task is initiated;
- During the tasks to keep the materials damp; and
- When air monitoring results dictate the need for particulate control.

4.3 Odor Controls

Control of odors during excavation work or other subsurface disturbance activities will consist of one or more of the following measures:

- Covering stockpile or other material staging areas;
- Covering the exposed excavation/removal areas;
- Wetting exposed material; and
- Backfilling the excavation.

5.0 COMMUNITY AIR MONITORING RECORDKEEPING

The qualified safety officer or technician will ensure that all air monitoring data is logged in a book or on daily field log sheets to document observations as part of the community air monitoring program. Documentation shall be made clear, concise, and provide the date, time of entry, location, personnel, weather conditions, and measured concentrations. Documentation will also include all observational data that has potential for impacting results, such as potential off-site interferences, on-site public interferences, damage to instruments, Site equipment problems, and/or weather related interferences.

All pages must be numbered; no lines shall be left blank (or put a line through it), and must be initialed on each page in ink. The last entry page for the shift or day that has blank space left at the bottom shall have a line drawn diagonally across it and signed at the bottom of the page. All corrections must be made with a single line, initialed, and dated.

Copies of the log book or field log sheets documenting community air monitoring will be submitted to NYSDEC with the Periodic Review Report (PRR). The Site owner and NYSDEC will be notified promptly via phone and electronic mail of any exceedance of an action level and of the corrective actions taken in connection with the exceedance. If an exceedance occurs, the environmental consultant will ensure corrective actions are taken the actions and results will be documented in the PRR.

All monitoring equipment must be calibrated on a daily basis in accordance with the manufacturer's operating instructions. The date, time, calibration gas, or other standard, and name of person performing the calibration will be documented in a log book.

TABLE

Table 1
Community Air Monitoring Summary

Monitoring Device	Monitoring Location	Monitoring Frequency	Action Level	Response Action
PID	Perimeter of Work Area	Continuous during intrusive work with work zone exceedances Periodic during all other disturbance activities [Background is the most recent upwind/ambient 15-minute average reading]	< 5 ppm above background at the downwind perimeter of the work zone (15-min TWA) > 5 ppm but < 25 ppm above background at the downwind perimeter of the work zone (15-min TWA) > 25 ppm above background at the downwind perimeter of the work zone (15-min TWA)	Continue normal operations Suspend operations until readings indicate < 5 ppm for 15-minute TWA. Take steps to abate emissions* Shut down operations and reevaluate work and controls
PM_{10} Aerosol/ Particulate Air Monitoring Unit	Perimeter of Work Area	Periodic during all disturbance activities Continuous during intrusive work with work zone exceedances [Background is the most recent upwind/ambient 15-minute average reading]	< 0.1 mg/m^3 above background at the downwind perimeter of the work zone (15-min TWA) > 0.1 mg/m^3 above background at the downwind perimeter of the work zone (15-min TWA), or visible dust leaving the excavation area > 0.15 mg/m^3 above upwind background level downwind perimeter of the work zone (15-min TWA)	Continue normal operations Implement particulate control measures* Halt all soil disturbance work until downwind perimeter of excavation area reading is <150 $\mu g/m^3$ above background (upwind perimeter).
Olfactory	Perimeter of Work Area	Periodic during all disturbance activities	Perceptible odors outside work zone, adjacent to receptor, or complaint	Suspend operations until odor condition abated. Take steps to abate odor*

Notes:
*See control measures in Sections 3.0 and 4.0.
TWA – time weighted average
PID – photoionization detector
mg/m^3 – milligrams per cubic meter
ppm – parts per million

APPENDIX E

QUALITY ASSURANCE PROJECT PLAN (QAPP)

NEW 470 PROJECT

12 ECKFORD STREET

BROOKLYN, KINGS COUNTY, NEW YORK

Quality Assurance Project Plan

AKRF Project Number: 12306
NYSDEC BCP Site Number: C224242

Prepared for:

New York State Department of Environmental Conservation
Division of Environmental Remediation, Remedial Bureau B
625 Broadway
Albany, New York 12233

On Behalf Of:

New 470 LLC
58 Vanderbilt Motor Parkway, Suite 100
Commack, New York 11725

Prepared by:

AKRF, Inc.
440 Park Avenue South, 7th Floor
New York, New York 10016
(212) 696-0670

DECEMBER 2019

TABLE OF CONTENTS

1.0 INTRODUCTION 1
2.0 PROJECT TEAM 1
2.1 Project Director 1
2.2 Project Manager 1
2.3 Field Team Leader 1
2.4 Project Quality Assurance/Quality Control (QA/QC) Officer 1
2.5 Laboratory Quality Assurance/Quality Control (QA/QC) Officer 2
3.0 STANDARD OPERATING PROCEDURES (SOPs) 2
3.1 Excavation and/or Site Composite Cover System Disturbance 2
3.2 Decontamination of Sampling Equipment 2
3.3 Heavy Equipment Decontamination 3
3.4 Management of Investigation-Derived Waste (IDW) and Remedial Operation and Maintenance (O&M) Waste 3
4.0 SAMPLING AND LABORATORY PROCEDURES 3
4.1 Import Soil/Fill Sampling 3
4.2 Reuse Sampling 4
4.3 Endpoint Soil Sampling 4
4.4 Sub-Slab Depressurization System (SSDS) and Soil Vapor Extraction System (SVES) Operations and Maintenance Sampling 5
4.4.1 Vacuum Monitoring 5
4.5 SSDS and SVES Sampling 5
4.5.1 System Vacuum Monitoring 5
4.5.2 Indoor Air Sampling 5
4.5.3 Influent/Effluent Vapor Sampling 6
4.5.4 Carbon Sampling 6
4.5.5 Condensate Water Sampling 7
4.6 Laboratory Methods 7
4.7 Quality Control (QC) Sampling 8
4.8 Sample Handling 9
4.8.1 Sample Identification 9
4.8.2 Sample Labeling and Shipping 10
4.8.3 Sample Custody 11
4.9 Field Instrumentation 11
4.10 Data Review 11
4.11 Reporting of Data 11

TABLES

Table 1 – Laboratory Analytical Methods for Analysis Groups
Table 2 – Field Sample and QC Sample Quantities
Table 3 – Examples of Sample Nomenclature

ATTACHMENT

Attachment A – Resumes of Key Project Personnel

1.0 INTRODUCTION

This Quality Assurance Project Plan (QAPP) describes the protocols and procedures that will be followed during implementation of the Site Management Plan (SMP) and associated appendices at the New 470 Project site, hereinafter referred to as the "Site". The Site is located at 12 Eckford Street in the Brooklyn, New York and is identified on the New York City Tax Map as Brooklyn Borough Block 2714, Lot 33. The Site was remediated under the New York State Department of Environmental Conservation (NYSDEC) Brownfield Cleanup Program (BCP) (New 470 Project; Site No. C224242).

The objective of this QAPP is to provide for Quality Assurance (QA) and maintain Quality Control (QC) during sampling performed to evaluate the performance and effectiveness of the remedy to reduce or mitigate contamination at the Site. Adherence to the QAPP will ensure that defensible data will be obtained to confirm the successful operation and maintenance of remedial systems.

2.0 PROJECT TEAM

The project team will be drawn from AKRF professional and technical personnel and AKRF's subcontractors. All field personnel and subcontractors will have completed a 40-hour training course and updated 8-hour refresher course that meet the Occupational Safety and Health Administration (OSHA) requirements of 29 Code of Federal Regulation (CFR) Part 1910. The following sections describe the key project personnel and their responsibilities.

2.1 Project Director

The project director will be responsible for the general oversight of all aspects of the project, including scheduling, budgeting, data management, and decision-making regarding the field program. The project director will communicate regularly with all members of the AKRF project team and the New York State Department of Environmental Conservation (NYSDEC) to ensure a smooth flow of information between involved parties. Mr. Marc Godick, LEP will serve as the project director for the SMP. Mr. Godick's resume is included in Attachment A.

2.2 Project Manager

The project manager will be responsible for directing and coordinating all elements of the SMP. The project manager will prepare reports and participate in meetings with the Site owner and/or the NYSDEC. Ms. Amy Jordan will serve as the project manager for the SMP. Ms. Jordan's resume is included in Attachment A.

2.3 Field Team Leader

The field team leader will be responsible for supervising the daily sampling and health and safety activities in the field and will ensure adherence to the Site Management Plan (SMP). The field team leader will report to the project manager on a regular basis regarding daily progress and any deviations from the SMP. The field team leader will be a qualified, responsible person, able to act professionally and promptly during required activities. The field team leader will be established for each task; however, Mr. Victor Chang is expected to be a field team leader for much of the work under the SMP. Mr. Chang's resume is included in Attachment A.

2.4 Project Quality Assurance/Quality Control (QA/QC) Officer

The QA/QC Officer will be responsible for adherence to this QAPP. The QA/QC officer will review the procedures with all personnel prior to commencing any fieldwork and will assess implementation of the required procedures. Ms. Michelle Lapin, P.E. will serve as the QA/QC officer for the SMP. Ms. Lapin's resume is included in Attachment A.

2.5 Laboratory Quality Assurance/Quality Control (QA/QC) Officer

The laboratory QA/QC officer will be responsible for quality control procedures and checks in the laboratory and ensuring adherence to laboratory protocols. He/She will track the movement of samples from the time they are checked in at the laboratory to the time that analytical results are issued. The laboratory QA/QC officer will conduct a final check on the analytical calculations and sign off on the laboratory reports. The laboratory QA/QC officer will be determined upon selection of a contract laboratory(s) for the SMP.

3.0 STANDARD OPERATING PROCEDURES (SOPS)

The following sections describe the SOPs for the monitoring activities included in the SMP. During these operations, all field personnel will wear appropriate personal protective equipment (PPE) and safety monitoring will be performed as described in the Site-specific Health and Safety Plan (HASP) provided as Appendix C of the SMP. SMP implementation will include sampling associated with the operation and maintenance (O&M) of the sub-slab depressurization system (SSDS) and soil vapor extraction (SVE) system (SVES). The SMP also includes inspections of the SSDS, SVES, and the Site composite cover system, and an Excavation Work Plan (EWP) and other provisions and appropriate actions to be taken in the event that future renovation or redevelopment of the Site requires the breaching of the composite cover system and excavation/removal of underlying soil/fill.

In all instances, any atypical or unexpected findings noted during inspections, sampling events, or SMP-governed field work will be communicated immediately to the environmental professional managing the Site work and, as necessary, to the NYSDEC project manager or NYSDEC's successor agency.

3.1 Excavation and/or Site Composite Cover System Disturbance

The procedures for excavation and/or other invasive work that may disturb remaining contamination beneath the Site composite cover system will be as follows:

- Soil removal and/or other invasive activities will be completed as needed in accordance with the SMP and EWP.
- Following invasive work, the demarcation layer will be replaced to provide a visual reference to the top of the residual management zone (RMZ).
- The composite cover system will be replaced to restore the condition to that which existed prior to the excavation. In general, the restoration types must match or exceed the existing material and thickness conditions of the Site cover types presented in the SMP to maintain Site composite cover system integrity across the entire Site.
- Decontaminate all equipment used in composite cover system disturbance as described in Sections 3.2 and 3.3 of this QAPP.

3.2 Decontamination of Sampling Equipment

All sampling equipment (drilling rods and casing, macrocore samplers, probe rods, etc.) will be either dedicated or decontaminated between sampling locations. The decontamination procedure will be as follows:

1. Scrub using tap water/Alconox™ mixture and bristle brush.
2. Rinse with tap water.
3. Scrub again with tap water/Alconox™ and bristle brush.
4. Rinse with distilled water.

5. Air-dry the equipment, if possible.

Decontamination will be conducted within 55-gallon drums or on plastic sheeting (or equivalent) that is bermed to prevent discharge to the ground or drains.

3.3 Heavy Equipment Decontamination

Decontamination of chemically-contaminated heavy equipment (e.g., augers, excavator buckets) will be accomplished using high-pressure steam or dry decontamination with brushes and shovels. Decontamination will take place on a decontamination pad and all liquids used in the decontamination procedure will be collected. Vehicles or equipment brought into an exclusion zone will be treated as contaminated and will be decontaminated prior to removal. All liquids used in the decontamination procedure will be collected, stored and disposed of in accordance with federal, state, and local regulations. Personnel performing this task will wear the proper PPE as prescribed in the Site-Specific Health and Safety Plan (HASP).

A decontamination area will be established around the planned excavation area, adjacent to the environmental enclosure. The floor of the decontamination area will be covered with 6-mil plastic sheeting, as necessary, and bermed to prevent spreading of decontamination fluids or potential discharge to the ground surface.

All equipment in direct contact with known or potentially contaminated material will be either dedicated or decontaminated prior to handling less contaminated material or removal from the Site. Decontamination of chemically contaminated heavy equipment will be accomplished using high-pressure steam or by dry decontamination with brushes and shovels. All liquids used in the decontamination procedure will be collected, stored, and disposed of in accordance with federal, state, and local regulations.

3.4 Management of Investigation-Derived Waste (IDW) and Remedial Operation and Maintenance (O&M) Waste

Any IDW and remedial O&M waste will be containerized in New York State Department of Transportation (NYSDOT)-approved 55-gallon drums or other appropriate containers. The drums will be sealed at the end of each work day and labeled with the date, the well or boring number(s), the type of waste (i.e., drill cuttings, development water or purge water) and the name of an AKRF point-of-contact. Drums will be staged in secure areas, away from public access to the extent practicable.

Soil/fill samples collected from soil boring or excavation activities will be used for waste characterization of soil/fill, since such data would be biased towards areas which are expected to be most contaminated. Additional waste characterization soil or other samples may be collected, if requested by the disposal facility. All IDW and remedial waste will be disposed of or treated according to applicable local, state, and federal regulations.

4.0 SAMPLING AND LABORATORY PROCEDURES

4.1 Import Soil/Fill Sampling

Prior to importing soil/fill for use as backfill, the intended imported material will be evaluated using the following procedures:

- A segregated stockpile of the intended imported material will be made available for sampling at a frequency and for the required parameters as outlined in Section 5.4(e) 10 of NYSDEC DER-10.
- Soil/fill sample(s) will be collected from the segregated stockpile for analysis in accordance with NYSDEC requirements and sampling results will be submitted to NYSDEC for approval.
- No material will be added to or removed from the segregated stockpile intended for import following the sample collection.
- Samples will be collected into laboratory-supplied containers.
- Samples will be kept in an ice-filled cooler or refrigerator, with the exception of any asbestos samples, until receipt by the laboratory.
- The clean soil/fill layer will be underlain by a demarcation layer such as orange snow fence to indicate the top of the original soil/fill.
- Decontaminate all sampling equipment between sampling locations as described in Sections 3.2 and 3.3 of this QAPP.

4.2 Reuse Sampling

Prior to reuse as backfill, excavated material will be evaluated using the criteria below:

- Concrete or demolition debris that does not exhibit signs of contamination will be sampled for asbestos prior to reuse on-site.
- Soil/fill material proposed for reuse will be sampled at a frequency and for the required parameters as outlined in NYSDEC's DER-10, Table 5.4.
- Samples will be collected into laboratory-supplied containers.
- Samples will be kept in an ice-filled cooler or refrigerator, with the exception of any asbestos samples, until receipt by the laboratory.
- Decontaminate all sampling equipment between sampling locations as described in Sections 3.2 and 3.3 of this QAPP.

4.3 Endpoint Soil Sampling

In the event that evidence of contamination [odors, staining, elevated photoionization detector (PID) readings, or analytical results of soil samples above NYSDEC Part 375 Restricted Residential Soil Cleanup Objectives (RRSCOs)] is identified during any breach to the composite cover system or excavation of soil/fill as part of the redevelopment or renovation of the Site, endpoint soil sampling activities will be performed in accordance with NYSDEC DER-10. Per NYSDEC DER-10 Section 5.4, sidewall samples will be collected a minimum one sample for every 30 linear feet and bottom samples will be collected at a frequency of one every 900 square feet. Endpoint soil samples will be analyzed for NYSDEC Final Commissioner's Policy - Soil Cleanup Guidance (CP-51) volatile organic compounds (VOCs) by EPA Method 8260C, target compound list (TCL) semivolatile organic compounds/base-neutrals (SVOCs/BNs) by EPA Method 8270D, and Toxicity Characteristic Leaching Procedure (TCLP) metals by EPA Method 6010C.

Soil sampling will be conducted according to the following procedures:

- Characterize the sample according to the modified Burmister soil classification system.

- After selecting which samples will be analyzed in the laboratory, fill the required laboratory-supplied sample jars with the soil from the selected sampling location or labeled sealable plastic bags. Seal and label the sample jars as described in Section 4.6 of this QAPP and place in an ice-filled cooler.
- Decontaminate any reusable soil sampling equipment between sample locations as described in Section 3.2 of this QAPP.
- Record boring number, sample depth, and sample observations (evidence of contamination, PID readings, soil classification) in field log book and boring log data sheet, if applicable.

4.4 Sub-Slab Depressurization System (SSDS) and Soil Vapor Extraction System (SVES) Operations and Maintenance Sampling

Three vapor monitoring points (VMPs) were installed during remedial action implementation at strategic locations to inspect induced vacuum conditions during the operation of the SSDS and SVES. Vacuum will be monitored at these locations at regular intervals as designated in the SMP.

4.4.1 Vacuum Monitoring

The procedures for instantaneously screening the vacuum monitoring points are as follows:

- Remove the access manhole cover.
- Attach the analog vacuum gauge or digital manometer with male Quick-Connect fitting to the female quick connect fitting at the monitoring point well head and document reading.
- Detach vacuum gauge/manometer and confirm that Quick-Connect female fitting is closed.
- Replace the access manhole.

4.5 SSDS and SVES Sampling

4.5.1 System Vacuum Monitoring

The procedures for instantaneously screening the vacuum monitoring points are as follows:

- Remove the access manhole.
- Attach the analog vacuum gauge or digital manometer with male Quick-Connect fitting to the female Quick-Connect fitting at the monitoring point well head and document reading.
- Detach vacuum gauge/manometer and confirm that Quick-Connect female fitting is closed/sealed.
- Replace the access manhole.

4.5.2 Indoor Air Sampling

Indoor air quality sampling may be conducted at the Site. If implemented, sampling will be conducted in accordance with the New York State Department of Health (NYSDOH) Vapor Intrusion Guidance Document. Indoor air quality sampling will be performed at

the Site following system failure greater than 48 hours in accordance with the following details:

- The indoor air sampling is to be conducted following the completion of a pre-sampling inspection and chemical inventory of the Site building.
- Place a labeled 6-Liter SUMMA® canister at the breathing zone level (3 to 4 feet above ground surface) in sampling locations established by NYSDEC and NYSDOH.
- Record the vacuum reading from the vacuum gauge on the canister at the beginning of the 8-hour sampling period.
- Open the valve of the canister and record the time in the field book. At the end of the 8-hour sampling period, close valves, remove flow-rate controllers and vacuum gauges, install caps on canisters, and record time.
- Place SUMMA canisters in shipping containers for transportation to laboratory.
- Repeat procedure for all of the sampling locations.

4.5.3 Influent/Effluent Vapor Sampling

Confirmatory vapor sampling will be conducted following startup and 6 months of operation (and as determined by the SMP and NYSDEC thereafter) as part of a reassessment of VOC emissions calculations according to the following procedure:

- Confirmatory sampling will comprise grab samples from each individual SSDS and SVES line and combined influent, intermediate, and effluent samples, as appropriate.
- A GilAir® Plus, or equivalent will be used to extract influent/effluent vapors from each of the sample ports installed on the SSDS/SVE lines. A 1 Liter Tedlar® bag will be filled with extracted vapors by attaching dedicated silicon-lined or silicon tubing from the sampling port to the inlet of the peristaltic pump. The Tedlar® bag fill port will be attached to the outlet of the peristaltic pump. Both ports will be opened and the peristaltic pump will be started. The pump rate will be throttled to fill the one liter Tedlar® bag in approximately 10 minutes, resulting in a an approximate air flow rate of 0.1 Liter per minute. The Tedlar® bag will be removed after its fill port has been closed.
- The Tedlar® bag will be properly labeled and enclosed in a zip-lock bag, which will be used as an added protection layer to ensure safety in transit to the laboratory.
- The silicone tubing used in the peristaltic pump will be replaced after each sample collected.
- Place Tedlar® bars in a shipping container for transportation to laboratory (do not put the Tedlar® bags on ice).
- Samples will be analyzed for VOCs by EPA Method TO-15.
- Decontaminate all non-dedicated sampling equipment between sampling locations as described in Section 3.2 of this QAPP.

4.5.4 Carbon Sampling

Based on monitoring inspections performed during the operation of the SVES, a representative grab sample of spent carbon maybe collected and submitted for laboratory analysis prior to off-site disposal according to the following procedure:

- Access carbon treatment filter in accordance with manufacturer's specification and component manuals.
- Note any unusual or abnormal olfactory or visual field observations.
- Collect one aliquot of spent carbon material into a laboratory supplied sampling container.
- Relinquish sealed sampling container to a certified laboratory for analysis of VOCs by EPA Method 8260.

4.5.5 Condensate Water Sampling

Based on monitoring inspections performed during the operation of the SVES, a representative sample of condensate water may be collected and submitted for laboratory analysis prior to off-site disposal according to the following procedure:

- Slowly remove the lid of the 55-gallon drum containing the collected condensate water and immediately measure the vapor concentrations in the well with a PID calibrated to the manufacturer's specifications.
- Lightly stir the water in the drum with clean, dedicated sample collection equipment or tubing to homogenize the collected condensate water.
- Collect a representative sample directly from a dedicated bailer or tubing connected to a peristaltic pump and place into the required sample containers as described in Section 4.6 of this QAPP. Sample should be collected for VOCs and submitted to a certified laboratory.

4.6 Laboratory Methods

Table 1 summarizes the laboratory methods that will be used to analyze field samples as well as the sample container type, preservation, and applicable holding times. Other analytes may be added if required by the disposal facility. An Environmental Laboratory Approval Program (ELAP)-certified laboratory will be used for all chemical analyses in accordance with DER-10 2.1(b) and 2.1(f), including NYSDEC July 2005 Analytical Services Protocol (ASP) Category B Deliverables.

Table 1
Laboratory Analytical Methods for Analysis Groups

Sample Type	Analysis	Method	Container Type	Preservative	Hold Time
Soil/Fill (Reuse/Backfill)	TCL VOCs	8260C	Encore sampler	4 °C	48 hours
	SVOCs	8270D	4 oz. clear glass jar	4 °C	5 days to extract, 49 days to analyze
	TAL Metals Mercury	6010C 7471B	4 oz. clear glass jar	4 °C	14 days 26 days
	PCBs	8082A	4 oz. clear glass jar	4 °C	14 days
	Pesticides	8081B	4 oz. clear glass jar	4 °C	5 days to extract, 49 days to analyze
Soil/Fill (Endpoint Sampling)	CP-51 VOCs	8260	Encore samplers (3), 2 oz. plastic jar	4 °C	48 hours
	TCL SVOCs-BNs	8270D	4 oz. clear glass jar	4 °C	5 days to extract, 49 days to analyze
	TCLP Metals	6010C	4 oz. clear glass jar	4 °C	14 days 26 days
Soil Vapor/Indoor Air Sampling	VOCs	TO-15	6-L SUMMA® Canister	None	30 days
SSDS/SVES Total Influent, Intermediate, Effluent	TCL VOCs	TO-15	1L Tedlar® Bags	None	72 hours
SSDS/SVES Individual Line Samples	TCL VOCs	TO-15	1L Tedlar® Bags	None	3 days
Granular Activated Carbon	TCL and TCLP VOCs	8260C	EnCore sampler and 4 oz. clear glass jar	4 °C	48 hours
Condensate Water	TCL VOCs	8260C	40 mL glass vial, septa top	4 °C, HCL	14 days

4.7 Quality Control (QC) Sampling

In addition to the laboratory analysis of the investigative soil samples, additional analysis will be included for QC measures, as required by the NYSDEC July 2005 ASP Category B sampling techniques. The QC samples will include field blanks, trip blanks, matrix spike/matrix spike duplicates (MS/MSD), and blind duplicate samples at a minimum frequency of one sample per 20 field samples collected or per sample delivery group (SDG). No additional QC samples will be collected during waste classification sampling unless required by the disposal facility. Table 2 provides a summary of the field samples and QA/QC samples to be analyzed by the laboratory.

Table 2
Field Sample and QC Sample Quantities

				QC Samples			
Sample Type	**Parameters**	**Analytical Method[1]**	**Field Samples**	**Field Blank[2]**	**Trip Blank[2]**	**MS/MSD[3]**	**Duplicate[3]**
Soil	VOCs	EPA 8260C	TBD	1/20 (TBD)	1 (Laboratory-Supplied)	1/20 (TBD)	1/20 (TBD)
	SVOCs, TAL Metals, Mercury, PCBs, and Pesticides	EPA 8270D, 6010C/7471B, 8082A, and 8081B	TBD	1/20	NA	1/20	1/20
SSDS/SVE Total Influent, Intermediate, Effluent	TCL VOCs	TO-15	X	NA	NA	NA	NA
SSDS/SVE Individual Line Samples	TCL VOCs	TO-15	X	NA	NA	NA	NA

Notes:
MS/MSD – matrix spike/matrix spike duplicate
TBD – sampling to be determined based on work activities
NA – not applicable

[1] – NYSDEC July 2005 ASP Category B deliverables
[2] – One trip blank per shipment with VOC analyses
[3] – One MS/MSD and duplicate sample per twenty field samples or sample shipment

4.8 Sample Handling

4.8.1 Sample Identification

All samples will be consistently identified in all field documentation, chain-of-custody (COC) documents, and laboratory reports. All samples will be amended with the collection date at the end of the sample name in a year, month, day (YYYYMMDD) format. Blind duplicate sample nomenclature will consist of: the sample type, followed by an "X"; MS/MSD sample nomenclature will consist of the parent sample name only but triplicate sample volume will be collected and the COC comment section will explain that the additional volume is for running the MS/MSD; and trip and field blanks will consist of "TB-" and "FB-", respectively, followed by a sequential number of the trip/field blanks collected within the SDG and the matrix (soil or groundwater). In accordance with NYSDEC Environmental Quality Information System (EQuIS™) protocol, special characters will not be used for sample nomenclature and sample IDs below 10 will be amended with a "0". Sample nomenclature examples are provided in Table 3.

Table 3
Examples of Sample Nomenclature

Sample Description	Sample Designation
Soil endpoint sample collected from 1 to 2 feet below grade at the north wall of an excavation	EP-N 1-2_ YYYYMMDD
Duplicate soil sample collected from 1 to 2 feet at the north wall of the excavation	EP-N 1-2_YYYYMMDD
Import soil sample collected from the first imported stockpile	ISP-1_YYYYMMDD
Reuse soil sample collected from the first on-site stockpile	SP-1_YYYYMMDD
Soil vapor sample	SV-1_YYYMMDD
Ambient air sample	AA-1_YYYYMMD
Indoor air sample	IA-1_YYYYMMDD
SVES effluent sample collected from the carbon treatment system intermediate port	SVE-INT_YYYYMMDD
SVES individual line sample collected from SVE-04	SVE-04_YYYYMMDD
Granular activated carbon	GAC_YYYYMMDD
Condensate Water	COND_YYYYMMDD

4.8.2 Sample Labeling and Shipping

All sample containers will be provided with labels containing the following information:

- Project identification
- Sample identification
- Date and time of collection
- Analysis(es) to be performed
- Sample preservative, if any
- Sampler's initials

Once the samples are collected and labeled, they will be placed in chilled coolers and stored in a cool area away from direct sunlight to await shipment to the laboratory. All samples will be shipped to the laboratory at least twice per week. At the start and end of each workday, field personnel will add ice to the coolers as needed.

The samples will be prepared for shipment by placing each sample in a sealable plastic bag, then wrapping each container in bubble wrap to prevent breakage, adding freezer packs and/or fresh ice in sealable plastic bags and the chain-of-custody (COC) form. Tedlar® bags will be enclosed in a zip lock bag as an added protection prior to being placed in a cooler or shipment container without ice. SUMMA® canisters will also be placed into their appropriate shipment containers and do not require preservation with ice. All samples will be shipped overnight (e.g., Federal Express) or transported by a laboratory courier. All coolers and shipment containers shipped to the laboratory will be sealed with mailing tape and a COC seal to ensure that they remain sealed during delivery.

4.8.3 Sample Custody

Field personnel will be responsible for maintaining the sample coolers in a secured location until they are picked up and/or sent to the laboratory. The record of possession of samples from the time they are obtained in the field to the time they are delivered to the laboratory or shipped off-site will be documented on COC forms. The COC forms will contain the following information: project name; names of sampling personnel; sample number; date and time of collection and matrix; and signatures of individuals involved in sample transfer, and the dates and times of transfers. Laboratory personnel will note the condition of the custody seal and sample containers at sample check-in.

4.9 Field Instrumentation

Field personnel will be trained in the proper operation of all field instruments at the start of the field program. Instruction manuals for the equipment will be on file at the site for referencing proper operation, maintenance and calibration procedures. The equipment will be calibrated according to manufacturer specifications at the start of each day of fieldwork, if applicable. If an instrument fails calibration, the project manager or QA/QC officer will be contacted immediately to obtain a replacement instrument. A calibration log will be maintained to record the date of each calibration, any failure to calibrate and corrective actions taken. The PID will be calibrated each day using 100 parts per million (ppm) isobutylene standard gas.

4.10 Data Review

In accordance with DER-10, each of the samples collected will undergo a third-party data review process to ensure the usability of the data collected. Data usability summary reports documenting any issues with QA/QC will be prepared and included in the Periodic Review Report (PRR). The resume for Lori Beyer of L.A.B. Validation Corp., the anticipated third-party data reviewer, is included in Attachment A.

4.11 Reporting of Data

All data generated during the monitoring activities will be submitted in the appropriate Environmental Quality Information System (EQuIS™) Electronic Data Deliverable (EDD) format.

ATTACHMENT A

RESUMES OF KEY PROJECT PERSONNEL

MICHELLE LAPIN, P.E.

SENIOR VICE PRESIDENT

Michelle Lapin is a Senior Vice President with more than 30 years of experience in the assessment and remediation of hazardous waste issues. She leads the firm's Hazardous Materials group and offers extensive experience providing strategic planning and management for clients. Ms. Lapin has been responsible for the administration of technical solutions to contaminated soil, groundwater, air and geotechnical problems. Her other duties have included technical and report review, proposal writing, scheduling, budgeting, and acting as liaison between clients and regulatory agencies, and project coordination with federal, state, and local authorities.

Ms. Lapin's hydrogeologic experience includes groundwater investigations, formulation and administration of groundwater monitoring programs and remediation throughout the Northeast. Her experience with groundwater contamination includes Level B hazardous waste site investigations; leaking underground storage tank studies, including hazardous soil removal and disposal and associated soil and water issues; soil gas/vapor intrusion surveys; and wetlands issues. Ms. Lapin is experienced in coordinating and monitoring field programs concerning hazardous waste cell closures. She has directed hundreds of Phase I, Phase II, and Phase III investigations and remediations, many of them in conjunction with developers, law firms, lending institutions, and national retail chains. She is also experienced in the cleanup of contaminated properties under Brownfield Cleanup Program (BCP) and Voluntary Cleanup Program (VCP) regulations.

BACKGROUND

Education

M.S., Civil Engineering, Syracuse University, 1985

B.S., Civil Engineering, Clarkson University, 1983

Professional Licenses/Certifications

New York State P.E.

State of Connecticut P.E.

Professional Memberships

Member, National Society of Professional Engineers (NSPE), National and CT Chapters

Member, American Society of Civil Engineers (ASCE), National and CT Chapters

Member, Connecticut Business & Industry Association (CBIA), CBIA Environmental Policies Council (EPC)

Member, Environmental Professionals' Organization of Connecticut (EPOC)

Board Member, New York City Brownfield Partnership

Member, NAIOP, a Commercial Real Estate Development Association

Years of Experience

Year started in company: 1994

Year started in industry: 1986

RELEVANT EXPERIENCE

Manhattan West, Manhattan, NY - NYC OER and USEPA

AKRF is providing environmental consulting services to Brookfield Office Properties in connection with the Manhattan West development site, which encompasses an entire city-block above the Amtrak approach to Penn Station. The four towers that comprise the Manhattan west development site are being remediated as four different sites under the New York City Mayor's Office of Environmental Remediation (OER), due to an E-Designation for hazardous materials, air quality, and noise attenuation. Ms. Lapin is the Remedial Engineer for the project, and oversees all remedial activities.

85 Jay Street, Brooklyn, NY - NYS Brownfield Redevelopment

AKRF's work includes the preparation and implementation of a NYSDEC-approved Remedial Action Work Plan for this approximately three-acre former industrial site that encompasses an entire city-block. The remediation is being conducted under the NYSDEC Brownfield Cleanup Program, primarily due to high levels of lead associated with former smelting operations. Ms. Lapin is the Remedial Engineer for this project and oversees all remedial activities.

Elton Crossing (Melrose C - Family), Bronx, NY - NYS Brownfield Redevelopment

AKRF's work includes the implementation of the NYSDEC-approved Remedial Action Work Plan for this former industrial property, including: in-situ testing, off-site transport, the closure of two petroleum spills; the registration, removal, and closure of five petroleum storage tanks encountered during excavation; and the delineation of soil contaminants, including hazardous lead, petroleum, and pesticides. Ms. Lapin was the Remedial Engineer for the project, and oversaw all remedial activities.

Yonkers Waterfront Redevelopment Project, Yonkers, NY

For this redevelopment along Yonkers' Hudson River waterfront, Ms. Lapin headed the remedial investigation and remediation work that included Phase I Environmental Site Assessments of 12 parcels, investigations of underground storage tank removals and associated soil remediation, remedial alternatives reports, and remedial work plans for multiple parcels. Several of the city-owned parcels were remediated under a Voluntary Cleanup Agreement; others were administered with state Brownfields grants. Hazardous waste remediation was completed on both brownfield and voluntary clean-up parcels, which enabled construction of mixed-use retail, residential development, and parking.

Atlantic Chestnut, Brooklyn, NY

AKRF was retained by Phipps Houses to provide environmental consulting services in connection with the purchase and development of former burned manufacturing buildings encompassing an entire city block in Brooklyn, New York. As part of due diligence, AKRF prepared a Phase I Environmental Site Assessment (ESA) Report for the property. After acquisition, the property was divided into three separate sites (3264 Fulton Street, 235 Chestnut Street, and 3301 Atlantic Avenue). AKRF prepared a Subsurface (Phase II) Investigation Work Plans and conducted Phase IIs at each of the sites, which included the collection and analysis of soil, soil vapor, and groundwater samples. Based on the results of the Phase IIs, documented in Subsurface (Phase II) Reports, New York State Brownfield Cleanup Program (NYSBCP) applications were prepared for each of the sites. After acceptance into the NYSBCP, AKRF prepared Citizen Participation Plans (CPPs) and distributed public notices. AKRF prepared Remedial Investigation (RI) Work Plans (RIWPs) for each of the sites to further investigate contaminated media prior to redevelopment, conducted the RIs, and is in the process of preparing the RI Reports (RIRs). Ms. Lapin is the Remedial Engineer for the project, and oversees all remedial activities.

West 61st Street Rezoning/Residential Development, New York, NY

Ms. Lapin directed the firm's hazardous materials work for this mixed-use development in Manhattan. The Algin Management Company hired AKRF to prepare an environmental impact statement (EIS) for the proposed rezoning of the western portion of the block between West 60th and 61st Streets, between Amsterdam and West End Avenues. The purpose of the proposed action was to facilitate the development of two 30-story residential towers with accessory parking spaces, and landscaped open space. The EIS examined a "worst case" condition for rezoning the block, which allowed Algin to build a residential building of approximately 375,000 square feet at their site. The building now contains 475 apartments, 200 accessory parking spaces, a health club, and community facility space. This site, with the services of AKRF, entered into New York State's Brownfield Cleanup Program (BCP). On-site issues included underground storage tanks remaining from previous on-site buildings, petroleum contamination from these tanks and possibly from off-site sources, and other soil contaminants (metals, semi-volatile organic compounds, etc.) from fill materials and previous on-site buildings. AKRF oversaw the adherence to the Construction Health and Safety Plan (HASP), which was submitted to and approved by the New York State Department of Environmental Conservation (NYSDEC), and monitored the waste streams, to ensure that the different types of waste were disposed of at the correct receiving facilities. This oversight also included confirmation and characteristic soil sampling for the receiving facilities and NYSDEC. A "Track 1" Clean up of the majority of the property (the portion including the buildings) was completed and the final Engineering Report was approved by the NYSDEC. AKRF has also completed a smaller portion of the property as a "Track 4" cleanup, which includes a tennis court and landscaped areas. Ms. Lapin continues to manage the annual inspections for the property owner in accordance with the Brownfield Cleanup Agreement.

2477 Third Avenue, Bronx, NY

AKRF conducted the investigation and remediation of the former 2477 Third Avenue gasoline station property under the New York State Department of Environmental Conservation's (NYSDEC's) Brownfield Cleanup Program (BCP). The work included shallow and deep aquifer groundwater testing, delineation of known areas of soil contamination, soil vapor analyses, and investigation and delineation of non-aqueous phase liquid (DNAPL) from past industrial activities. Upon NYSDEC approval of the Remedial Action Work Plan (RAWP), AKRF conducted the removal of the nine on-site underground storage tanks (USTs) and 1,100 tons of petroleum-contaminated soil, the application of six in-situ chemical oxidation (ISCO) groundwater treatments, and the implementation of four Enhanced Fluid Recovery (EFR) events to remove desorbed gasoline-related hydrocarbons in the groundwater. The site received a Certificate of Completion (COC) from the BCP in December 2015 and a Notice of Satisfaction (NOS) in October 2016 from the Mayor's Office of Environmental Remediation (OER) in connection with the hazardous materials E-Designation assigned to the property. Ms. Lapin was the professional engineer of record, responsible for the remediation design elements and overall adherence to the NYSDEC and New York City Office of Environmental Remediation (OER) regulations.

164 Kent Avenue, Brooklyn, NY (AKA Northside Piers and 1 North 4th Place)

The project was a multi-phase development consisting of a large waterfront block in the Williamsburg Rezoning Area. The project site was developed with a mixed-use residential-commercial high rise towers with an esplanade and a pier along the East River. AKRF provided acquisition and development support, including performing Phase I and II environmental site assessments, and preparation of Remedial Action Plans (RAPs) and Construction Health and Safety Plan (CHASPs) for approval by New York City Department of Environmental Protection (DEP) and New York City Mayor's Office of Environmental Remediation (OER). AKRF provided assistance with construction oversight during soil handling activities and managing the Community Air Monitoring Plan (CAMP) activities. To date, closure reports have been prepared and occupancy achieved for three of the four buildings. Ms. Lapin is the Professional Engineer (P.E.) of record for the DEP and OER RAPs, CHASPs and Remedial Closure Reports (RCRs).

443 Greenwich Street, Manhattan, NY

This Site was assigned an E-Designation for hazardous materials (and air quality and noise) during the North Tribeca Rezoning in 2010, which requires environmental testing and, if necessary, remediation to the satisfaction of the New York City Mayor's Office of Environmental Remediation (OER). After years of public opposition to the original redevelopment scheme calling for a boutique hotel, this former manufacturing building and its current developer gained acceptance through the Department of City Planning and the Landmarks Preservation Commission to move forward with redevelopment as residential lofts. The redevelopment process began in 2012 and led to initial re-occupancy in 2016 after overcoming several regulatory challenges while seeking LEED® certification.

Once trichloroethene (TCE) was identified on-site, the typically straight forward assignment of delineating contaminant sources for AKRF became much more complex following the identification of an off-site TCE groundwater plume. Based on the completion of several rounds of additional sampling and investigation activities including a compound specific isotopic analysis (CSIA) of the chlorinated volatile organic compounds (VOCs) detected in the central portion of the Site and the off-site monitor wells south of the Site, the presence of two separate releases (one originating on-site and one originating off-site) of TCE was confirmed. Based on the confirmation that the Site was not the contamination source associated with the off-site plume, the redevelopment of the Site proceeded under the review of the OER, and did not require direct or continued oversight from the New York State Department of Environmental Conservation (NYSDEC). Furthermore, the developer of the Site, who had become the owner, was not deemed responsible to complete additional off-site investigation or remediation associated with the separate, off-site TCE groundwater plume.

For this project, AKRF utilized forensic-based analysis of chlorinated VOC plumes and was one of the first projects that included a groundwater treatment technology managed by the OER in its E-Designation program. The Site also includes an engineered cap to prevent exposure to underlying soil/fill, a vapor barrier/waterproofing system beneath the building slab and along foundation sidewalls, and the operation of an active sub-slab depressurization (SSD) system. The project was awarded the 2017 Environmental Protection award by the New York City Brownfield Partnership. Ms. Lapin was the professional engineer of record, responsible for the remediation design and adherence of the remediation and remediation systems installation and ongoing operation.

Larkin Plaza, Yonkers, NY – Remedial Investigation, Construction Oversight

AKRF assisted RXR Realty with enrolling the 1.1-acre Larkin Plaza site in the New York State Department of Environmental Conservation's (NYSDEC's) Brownfield Cleanup Program (BCP). Since being accepted into the program, AKRF conducted an extensive remedial investigation, prepared the necessary remedial action plans, managed the citizen participation tasks, and is in the process of conducting the remediation in conjunction with NYSDEC oversight. To date, the remedial work has included in-situ chemical oxidation (ISCO) treatments, contaminated soil removal, and petroleum product recovery. AKRF also assisted RXR with various construction-related services, including dewatering discharge permitting, soil disposal characterization testing, and stormwater pollution prevention plan (SWPPP) preparation. AKRF's Cultural Resources department is in the process of preparing a submission to the State Historic Preservation Office (SHPO) on behalf of RXR related to the acquisition of additional public funding sources for the construction project. A Certificate of Completion (COC) from the NYSDEC is anticipated at the end of 2018. Ms. Lapin is the professional engineer of record, responsible for the remediation design elements and adherence to the NYSDEC-approved work plans and remediation design.

Memorial Sloan Kettering Cancer Center-CUNY 74th Street EIS, New York, NY

AKRF was engaged by Memorial Sloan-Kettering Cancer Center (MSK) and CUNY-Hunter College (CUNY) to prepare an EIS for a proposed joint facility located on a New York City-owned parcel located between East 73rd Street and East 74th Street adjacent to the FDR Drive in Manhattan. The proposed facility was formerly occupied

by the Department of Sanitation, with over 41 underground storage tanks, will include an ambulatory medical care center for MSK and educational and medical research facilities for CUNY.

Ms. Lapin led the hazardous materials work, which included the preparation of the Phase I and II environmental site assessments, remedial action work plans (RAWPs), and construction health and safety plans (CHASPs) for submission to the New York City Office of Environmental Remediation (OER) for the Voluntary Cleanup Program (VCP) and to the New York State Department of Environmental Conservation (NYSDEC) for remediation of a petroleum spill. The RAWPs and CHASPs included provisions for excavation of contaminated soil and rock, removal of tanks and environmental monitoring during the construction activities. AKRF also performed a pre-demolition asbestos survey of the remaining concrete foundation structures and prepared specifications for asbestos abatement, soil management and underground storage tank removal and disposal.

The subgrade remediation was completed in compliance with the OER-approved RAWP and the spill was closed by the NYSDEC. The project has been completed, the spill was closed by the NYSDEC, and a Notice of Satisfaction was issued from the OER.

New York City Transit Hazardous Materials On-Call Contract, Various Locations, New York City, NY

As part of a five-year, $10 million on-call environmental engineering and consulting services contract with MTA New York City Transit (NYCT), AKRF performed phase I Environmental Site Assessments (ESAs), asbestos, lead paint, indoor air quality and hazardous materials consulting services at various stations, tunnels and structures. Ms. Lapin oversaw the firm's team of technicians responsible for work at construction work sites occupied by multiple contractors and trades, monitoring contractor work practices, and inspection hazardous waste storage activities. She also reviewed AKRF's asbestos consulting services, coordinating the efforts of AKRF team members who conducted asbestos surveys and reporting, design services, and asbestos abatement oversight at manholes, stations, tunnels and other structures throughout New York.

Brooklyn Bridge Park, Brooklyn, NY

AKRF prepared an Environmental Impact Statement (EIS) and is continuing to provide technical and planning support services for Brooklyn Bridge Park, which revitalizing the 1.3-mile stretch of the East River waterfront between Jay Street on the north and Atlantic Avenue on the south. The new park, allows public access to the water's edge, allowing people to enjoy the spectacular views of the Manhattan skyline and New York Harbor. It also provides an array of passive and active recreational opportunities, including lawns, pavilions, and a marina. As with many waterfront sites around New York City, the lands along the Brooklyn waterfront have a long history of industrial activities. Some of these industries used dangerous chemicals and generated toxic by-products that could have entered the soil and groundwater. In addition, landfilling activities along the shoreline also used ash and other waste materials from industrial processes. Based on site inspections, historical maps, government records, and other sources, AKRF has been investigating the potential for the presence for hazardous materials in the park. This information was compiled into a Phase 1 Environmental Site Assessment report. AKRF has also provided and continues to support to the design team related to designing the project to minimize costs related to remediating hazardous materials where possible. Ms. Lapin is serving as senior manager for the hazardous materials investigations.

Columbia University Manhattanville Academic Mixed-Use Development, New York, NY

Ms. Lapin served as Hazardous Materials Task Leader on this Environmental Impact Statement (EIS) for approximately 4 million square feet of new academic, research and neighborhood uses to be constructed north of Columbia University's existing Morningside campus. The work included Phase I Environmental Site Assessments for the properties within the site boundaries, and estimates for a Subsurface (Phase II) Investigation of the entire development area. The firm's Hazardous Materials group performed over 30 individual Phase I Environmental Site

Assessments for properties within the development area. In addition, a Preliminary Environmental Site Assessment (PESA) was completed in conjunction with the Environmental Impact Statement (EIS). Based on the Phase I studies, AKRF conducted a subsurface (Phase II) investigation in accordance with a New York City Department of Environmental Protection (NYCDEP) approved investigative work plan and health and safety plan. Subsurface activities included the advancement of soil borings, groundwater monitor wells, and the collection of soil and groundwater samples for laboratory analysis. This study was used to estimate costs to remediate contaminated soil and groundwater, and underground storage tanks and hazardous building materials, including lead-based paint and asbestos-containing materials.

Albert Einstein College of Medicine Center for Genetic and Translational Medicine, Bronx, NY

Ms. Lapin directed the firm's hazardous materials work in connection with the construction a new Center for Genetics and Translational Medicine (CGTM) building on the Bronx campus of the Albert Einstein College of Medicine of Yeshiva University. AKRF prepared an Environmental Assessment Statement (EAS) that examined such issues as land use, zoning, air quality, urban design and visual resources, hazardous materials, traffic, noise, and air quality. Ms. Lapin's work included analysis of the existing conditions and potential impacts that the construction could cause to the environment and human health.

NY Wheel, Staten Island, NY

Working with the New York City Department of Small Business Services (SBS) as lead agency, AKRF conducted an environmental review for the forthcoming Empire Outlets and New York Observation Wheel (NY Wheel), a mixed-use development situated on a State Voluntary Cleanup Program (VCP) site managed by the New York City Economic Development Corporation (EDC), on the northern Staten Island waterfront. AKRF provided an EIS analyzing the combined project. In addition, AKRF prepared an updated Site Management Plan (SMP) reflecting the proposed development for the VCP site. The SMP was approved by the New York State Department of Environmental Conservation (NYSDEC) in March 2015.

Hazardous materials services provided by AKRF for New York Wheel LLC during construction on the NY Wheel site include environmental construction oversight, inspection and documentation of SSDS installation, soil sampling, and reporting to ensure compliance with the SMP, storm water pollution prevention plan (SWPPP) inspections, and site design services. AKRF's work entails regular coordination with EDC for reporting to NYSDEC, modifications to the SMP, etc. Ms. Lapin is the professional engineer of record, responsible for adherence to the NYSDEC-approved plans and coordination with the NYSDEC regarding the design elements.

Hudson River Park, New York, NY

Ms. Lapin is directing AKRF's hazardous materials work during construction of Hudson River Park, a five-mile linear park along Manhattan's West Side. As the Hudson River Park Trust's (HRPT's) environmental consultant, AKRF has overseen preparation and implementation of additional soil and groundwater investigations [working with both the New York State Department of Environmental Conservation (NYSDEC) and the New York City Department of Environmental Protection (NYCDEP)], all health and safety activities, and removal of both known underground storage tanks and those encountered during construction. Previously, the firm performed hazardous materials assessments as part of the Environmental Impact Statement (EIS) process, including extensive database and historical research, and soil and groundwater investigations. Ms. Lapin has been the senior consultant for the soil and groundwater investigations and remediation, and the asbestos investigations and abatement oversight.

Roosevelt Union Free School District – District-wide Improvement Program, Roosevelt, NY

Ms. Lapin managed the hazardous materials investigation for the Draft and Final Environmental Impact Statements (EIS) for the improvement program, which included the demolition of three existing elementary

schools and portions of the junior-senior high school, and the reconstruction of three replacement elementary schools, a separate replacement middle school, and renovations to the high school. Following the EIS, additional hazardous materials investigations were completed, including comprehensive asbestos and lead surveys; Phase I and Phase II Environmental Site Assessments; the preparation of asbestos, lead, hazardous materials and demolition specifications; and obtaining site-specific variances from the New York State Department of Labor (NYSDOL). The middle school remediation was conducted through coordination with the New York State Department of Environmental Conservation (NYSDEC), the New York State Department of Health (NYSDOH), the New York State Education Department (NYSED) and the local school district. The project was approved, and construction/renovation for the new middle school completed such that the school opened for the Fall 2008 semester as planned.

Fiterman Hall Deconstruction and Decontamination Project, New York, NY

The 15-story Fiterman Hall building, located at 30 West Broadway between Barclay and Murray Streets, originally constructed as an office building in the 1950s, had served as an extension of the City University of New York (CUNY) Borough of Manhattan Community College (BMCC) since 1993. The building was severely damaged during the September 11, 2001, attack on the World Trade Center (WTC) when 7 WTC collapsed and struck the south façade of the building, resulting in the partial collapse of the southwest corner of the structure. The building was subsequently stabilized, with breaches closed and major debris removed, however, extensive mold and WTC dust contaminants remain within the building, which must be taken down. The project required the preparation of two Environmental Assessment Statements (EASs) for the redevelopment of Fiterman Hall—one for the deconstruction and decontamination of the building and one for the construction of a replacement building on the site. AKRF prepared the EAS for the Deconstruction and Decontamination project, which included the decontamination of the interior and exterior of the building, the removal and disposal of all building contents, and the deconstruction of the existing, approximately 377,000-gross-square-foot partially collapsed structure. Ms. Lapin reviewed the deconstruction and decontamination plans for the EAS. The cleanup plan was submitted to the United States Environmental Protection Agency (USEPA).

Davids Island Site Investigations, New Rochelle, NY

Ms. Lapin managed the hazardous materials investigation of Davids Island, the largest undeveloped island on the Long Island Sound in Westchester County. The 80-acre island features pre- and post-Civil War military buildings and parade grounds, and is viewed as a major heritage, tourism, and recreational amenity. The island, formerly known as Fort Slocum, was used by the U.S. military, beginning in the 19th century, as an Army base, hospital, and training center. The island was planned for county park purposes. The investigation included a Phase I Environmental Site Assessment, with historical research going back to the 17th century, a Phase II (Subsurface) Investigation, underground storage tank investigations, asbestos surveys, and conditions surveys of all remaining structures. Cost estimates were submitted to Westchester County for soil remediation, asbestos abatement, and building demolition.

Site Selection and Installation of 11 Turbine Generators, New York and Long Island, NY

AKRF was retained by the New York Power Authority (NYPA) to assist in the State Environmental Quality Review Act (SEQRA) review of the proposed siting, construction, and operation of 11 single-cycle gas turbine generators in the New York metropolitan area. Ms. Lapin managed the hazardous materials investigation of the sites. The work has included Phase I Environmental Site Assessments, subsurface investigations, and construction health and safety plans.

Cross Westchester (I-287) Expressway Phases V and VI, Westchester County, NY

For the New York State Department of Transportation's (NYSDOT) I-287 reconstruction project, Ms. Lapin served as Project Manager and was responsible for directing the contaminated materials aspect of the final design effort for the reconstruction of Westchester County's major east-west artery. As part of her duties, Ms. Lapin managed the asbestos investigations at eight bridges and wetland delineation along the entire corridor and wrote the scope of work and provided general management of the project.

Supermarket Redevelopment, New Fairfield, CT

AKRF provided consulting services to the developer and owner of a nine-acre site, including conducting a remedial investigation and remediation of a site contaminated from former dry cleaning operations and off-site gasoline spills. The investigation included the installation of monitoring wells in three distinct aquifers, geophysical logging, pump tests, and associated data analysis. Ms. Lapin presented the environmental issues and planned remediation to local and state officials during the early stages of the planning process to incorporate their comments into the final remedial design. A remedial action work plan (RAWP) was completed and approved by the Connecticut Department of Environmental Protection (CTDEP) within a year to enable redevelopment work for a new supermarket and shopping center. The RAWP included the remediation of soil within the source area and a multi-well pump and treat system for the recovery of non-aqueous and dissolved phase contamination in groundwater. The design of the recovery well system included extensive groundwater modeling to ensure capture of the contaminant plume and the appropriate quantity and spacing of the wells. Ms. Lapin directed the soil removal remedial activities and monitoring for additional potential contamination during construction. In addition, AKRF performed comprehensive pre-demolition asbestos and lead-based paint surveys of the former site structures, conducted abatement, air monitoring and oversight, and provided environmental consulting support for the development of the site. The groundwater remediation system was installed during site development and began operation once development was complete.

Broad Street, Stamford, CT [former Project name: Target Stamford)

AKRF originally completed a Phase I Environmental Site Assessment (ESA) for a developer of this property, located at southeastern corner of Broad Street and Washington Boulevard in downtown Stamford, Connecticut, for a proposed residential development. Four years later, an update of this Phase I ESA was conducted for a proposed Target retail development. The study area included the current Target site and the west-adjacent site which was subsequently developed as a luxury residential tower. Following the Phase I report, a subsurface (Phase II) investigation was conducted, which included soil borings, groundwater monitor wells, soil and groundwater sample collection and analysis. The results of the Phase II investigation were used to develop a remediation strategy. An additional Phase I/Phase II investigation was conducted of the adjacent former transmission repair facility, which included a site inspection, review of local and state records, an underground storage tank markout survey, advancement of soil borings, and collection of soil samples for laboratory analysis. AKRF also conducted asbestos surveys prior to abatement and demolition of the former Broad Street and Washington Boulevard buildings.

EPA Brownfields Assessment Program, Naugatuck, CT

Ms. Lapin is currently serving as the Principal-in-Charge for a USEPA Brownfields Assessment program project in Naugatuck, Connecticut. She is overseeing the assessment and investigation of key development parcels, including Work Plan and QAPP preparation, and conducting community outreach tasks to communicate site risks and the project process. Mr. Stefaniak plays the lead role in administering the USEPA Cooperative Agreement on behalf of the Borough.

East 75th/East 76th Street Site, New York, NY

Ms. Lapin served as Senior Manager for this project that encompassed coordination and direct remediation efforts of this former dry cleaning facility and parking garage prior to the sale of the property and its ultimate redevelopment for use as a private school. A preliminary site investigation identified 20 current and former petroleum and solvent tanks on the property. A soil and groundwater testing program was designed and implemented to identify the presence and extent of contamination resulting from potential tank spills. This investigation confirmed the presence of subsurface petroleum contamination in the soil and solvent contamination from former dry cleaning activities in the bedrock. AKRF completed oversight of the remediation under the State's Voluntary Cleanup Program. Remediation, consisting of tank removals and excavation of contaminated soil and the removal of solvent-contaminated bedrock down to 30 feet below grade, has been completed. AKRF completed oversight of the pre-treatment of groundwater prior to discharge to the municipal sewer system and an off-site study to determine impacts to groundwater in downgradient locations.

Former Macy's Site, White Plains, NY

While assisting Tishman Speyer with plans to redevelop this site, Ms. Lapin managed the pre-demolition work, which included a Phase I site assessment; subsurface investigation (Phase II), including the analysis of soil and groundwater samples for contamination; a comprehensive asbestos, lead paint, and PCB investigation; radon analysis; and coordination and oversight of the removal of hazardous materials left within the building by previous tenants. Work also included asbestos abatement specifications and specifications for the removal of two 10,000-gallon vaulted fuel-oil underground storage tanks.

Storage Deluxe, Various Locations, NY

Ms. Lapin manages the firm's ongoing work with Storage Deluxe, which includes Phase I Environmental Site Assessments and Phase II Subsurface Investigations, underground storage tank removals and associated remediation, asbestos surveys and abatement oversight, and contaminated soil removal and remediation for sites in Connecticut, the Bronx, Brooklyn, Manhattan, Westchester County, and Long Island.

Home Depot, Various Locations, NY and CT

Ms. Lapin, serving as either Project Manager or Senior Manager, has managed the investigations and remediation at multiple Home Depot sites in the five boroughs, Long Island, and Connecticut. The investigations have included Phase I, II, and III site assessments, asbestos and lead paint surveys, abatement specifications and oversight, and soil and groundwater remediation.

Avalon on the Sound, New Rochelle, NY

For Avalon Bay Communities, Ms. Lapin managed the investigations and remediation of two phases of this residential development, including two luxury residential towers and an associated parking garage. Remediation of the first phase of development (the first residential tower and the parking garage) included gasoline contamination from a former taxi facility, fuel oil contamination from multiple residential underground storage tanks, and chemical contamination from former on-site manufacturing facilities. The remediation and closure of the tank

spills was coordinated with the New York State Department of Environmental Conservation (NYSDEC). The initial investigation of the Phase II development—an additional high-rise luxury residential building—detected petroleum contamination. A second investigation was conducted to delineate the extent of the contamination and estimate the costs for remediation. AKRF oversaw the remediation and conducted the Health and Safety monitoring. The remediation was completed with closure and approvals of the NYSDEC.

Mill Basin, Gerritsen Inlet, and Paerdegat Basin Bridges, Final Design, Shore Parkway, Brooklyn, NY

Following the preparation of the Generic Environmental Impact Statement (GEIS) for the Belt Parkway Bridges Project, the firm was retained for supplemental work during the final design phase of the project. This included National Environmental Policy Act (NEPA) and State Environmental Quality Review Act (SEQRA) documentation for three of the bridges—Mill Basin, Gerritsen Inlet, and Paerdegat Basin—which will be federally funded. Ms. Lapin managed the contaminated materials investigation that included a detailed subsurface contaminated materials assessment, both subaqueous and along the upland approaches.

NYSDOT Transportation Management Center (TMC), Hawthorne, NY

AKRF conducted environmental studies for the New York State Department of Transportation (NYSDOT) at the current troopers' headquarters in Hawthorne, NY. The property is the proposed site of a new Transportation Management Center. AKRF completed a comprehensive asbestos survey of the on-site building and prepared asbestos abatement specifications; performed a Phase I site assessment; conducted an electromagnetic (EM) survey that located two fuel oil underground storage tanks, and developed removal specifications for the two underground storage tanks and an aboveground storage tank.

Metro-North Railroad Poughkeepsie Intermodal Station/Parking Improvement Project, Poughkeepsie, NY

Ms. Lapin served as Project Manager of the hazardous materials investigation in connection with AKRF's provision of planning and environmental services for parking improvement projects at this station along the Hudson Line. The project included an approximately 600-space garage, additional surface parking, and an intermodal station to facilitate bus, taxi, and kiss-and-ride movements. Ms. Lapin conducted Phase I and II contaminated materials assessments and worked with the archaeologists to locate an historical roundhouse/turntable.

Metro-North Railroad Golden's Bridge Station Parking Project, Westchester County, New York

For Metro-North Railroad, Ms. Lapin managed a Phase I Environmental Site Assessment of a property that has since become the new parking area, used by the existing Golden's Bridge train station. Ms. Lapin also conducted a subsurface (Phase II) investigation of the original parking area, track area, and existing platform for the potential impact of moving tracks in the siding area to extend the existing parking area and adding an access from a proposed overhead walkway (connecting the train station to the new parking area over a highway). The study also included an assessment for lead-based paint and asbestos on the platform structures.

East River Science Park, New York, NY

Originally, New York University School of Medicine (NYUSOM) retained the firm to prepare a full Environmental Impact Statement (EIS) for its proposed East River Science Park (ERSP). The proposed complex was to occupy an underutilized portion of the Bellevue Hospital campus between East 30th Street and approximately East 28th Street, immediately south of NYU's campus. As originally contemplated, Phase I was to include 618,000 square feet of development, including a clinical practice and research building, a biotech center, 220 housing units for post-doctorate staff, a child care center, and a conference center. This phase would include reuse of the former Bellevue Psychiatric Building, a historic structure on East 30th Street east of First Avenue.

Phase II was to include a second biotech building with a library to serve NYU and Bellevue at the eastern end of the block between 29th and 30th Streets. Phase III was to include a third biotech building and parking. The project's EIS considered a full range of issues, including land use, socioeconomics, shadows, historic resources, open space, traffic and transportation, air quality, noise, and construction. The firm also prepared all of the traffic and transportation studies for the urban design and master planning efforts. Ms. Lapin managed the Phase I Environmental Site Assessment and other hazardous materials-related issues.

Events relating to September 11, 2001 put a hold on the project for a number of years. When the project resurfaced, it had a new developer and a decreased scope. Ms. Lapin updated the hazardous materials issues for the new developer and consulted with them regarding remediation strategies and involvement of regulatory agencies. For the actual remediation/development, the city requested oversight by AKRF to represent its interests (the city is retaining ownership of the land). Ms. Lapin completed directing the remediation oversight on behalf of the City of New York for the remediation of the former psychiatric hospital building, laundry building and parking areas associated with Bellevue Hospital. The new development includes a biotechnology center (Commercial Life Science Research and Office Park) comprising two buildings (combined 550,000 square feet), street level retail, and an elevated plaza.

68, 76 and 78 Forest Street and 96-98 Grove Street, Stamford, CT

Ms. Lapin led this project, for which AKRF was retained to complete a Phase I Environmental Site Assessment (ESA) of five residential properties, and asbestos surveys and lead-based paint surveys of the five multi-family residential structures prior to a real estate transaction. The investigations were completed to allow demolition of the residential structures and prepare the properties for development into the Highgrove high rise condominium complex. AKRF represented the purchaser and site developer during the due diligence process, identified areas of environmental concern, and completed underground storage tank closure activities prior to initiating site development. In addition, AKRF conducted a Phase I ESA of a property on Summer Street that was being used by the developer as a "temporary" office building and a parking area utilized as a sales center and apartment model for the Highgrove residential development.

Shelton Storage Deluxe, Shelton, CT

AKRF completed Phase I, Phase II and Tank Removal/Remediation services for a storage facility in Shelton, Connecticut. Based on this information from the Phase I ESA, AKRF conducted a Phase II study that revealed groundwater impact (gasoline), possibly from an off-site source. Additional testing was then conducted to determine the source of the gasoline contamination. Testing of a wood block floor revealed concentrations of volatile and semivolatile organic compounds and total petroleum hydrocarbons; therefore, disposal of this material had to be as a petroleum-contaminated waste. The additional testing included upstream and downstream surface water samples, and on-site detention pond water and sediment samples. Subsequent to the Phase II testing, a 4,000-gallon on-site underground storage tank was removed. Upon removal, contaminated soil and groundwater were observed and a spill was called into the Connecticut Department of Environmental Protection (CTDEP). Following completion of remedial activities and submission of a closure report, the spill was closed by the CTDEP. Ms. Lapin directed the firm's efforts to complete this project.

DPR Soundview Park Playgrounds and Open Space, Bronx, NY

AKRF is part of a team working on the reconstruction of this 212-acre NYCDPR public park located along the Bronx River in the Bronx, New York. The park was identified as an underutilized park and is being improved in accordance with the goals of PlaNYC. Ms. Lapin is overseeing AKRF's hazardous materials investigations including environmental and remediation-related work. AKRF prepared the Environmental Assessment Statement (EAS) and the project has moved into the design and construction phase. The remediation/construction of multiple phases of the development is currently underway.

Rego Park Home Depot, Queens, NY

Solvent contamination was encountered during retail development of a former industrial property in Rego Park, Queens, New York. The site work included an extensive investigation and a multi-phase remediation performed under the NYSDEC Voluntary Cleanup Program (BCP). Remediation included removal of aboveground and underground storage tanks (ASTs and USTs) and hotspot soil removal. An Air Sparging/Soil Vapor Extraction (AS/SVE) groundwater remediation system designed by AKRF was installed as part of the building construction. Continued remediation work included upgrading and expanding the AS/SVE system after the store was opened. AKRF prepared the Final Engineering Report and obtained closure with a Release and Covenant Not to Sue issued by NYSDEC in 2013. AKRF continues operations, maintenance, and monitoring under the NYSDEC-approved Site Management Plan. Ms. Lapin is the Professional Engineer (P.E.) of record for the remediation design and implementation in accordance with the NYSDEC Brownfield Cleanup Program (BCP).

250 North 10th Street, LLC. Residential Redevelopment Site, Brooklyn, NY

AKRF was retained to investigate and remediate this former industrial property in the Williamsburg section of Brooklyn, New York in connection with site redevelopment. The site is approximately 50,000 square feet, and redevelopment included a six story residential building and parking garage. The work was completed to satisfy the requirements of the NYC E-designation Program and NYC Voluntary Cleanup Program (NYC VCP). AKRF completed a Remedial Investigation (RI) to evaluate the nature and extent of site contamination, and developed a Remedial Action Work Plan (RAWP) to properly address site contamination during redevelopment. Remediation included removal of underground storage tanks, more than 7,500 tons of contaminated soil, and installation of a vapor barrier and site cap across the entire property. The remediation was completed under oversight of the NYC Office of Environmental Remediation (OER), and in a manner that has rendered the Site protective of public health and the environment consistent with residential use of the property. Ms. Lapin is the Professional Engineer (P.E.) of record for the remedial effort in accordance with the OER Voluntary Cleanup Program (VCP).

AP-Williamsburg, LLC, 50 North 5th Street Development, Brooklyn, NY

AKRF directed the remedial program at a 55,000-square foot site located in the Williamsburg section of Brooklyn, New York. The site had an industrial and manufacturing history for over 100 years that included a barrel making factory, use of kilns, and a carpet and flooring materials warehouse. AKRF completed a Remedial Investigation (RI) to evaluate the nature and extent of site contamination, and developed a Remedial Action Work Plan (RAWP) to properly address site contamination during redevelopment. Remediation included removal of more than 5,000 tons of contaminated soil, and installation of a vapor barrier and sub-slab depressurization system (SSDS) beneath the site building. The remediation was completed in a manner that has rendered the Site protective of public health and the environment consistent with commercial and residential use of the property, and in accordance with the requirements of the NYC OER E-designation program. The site includes a seven story residential apartment building with street level retail space and a parking garage. Ms. Lapin is the Professional Engineer (P.E.) of record for the NYC OER RAWP and Remedial Closure Report (RCR).

New York City School Construction Authority (NYCSCA), Environmental Consulting Hazardous Materials Services

AKRF has undertaken various assignments under consecutive hazardous materials on-call contracts, including environmental assessment, remedial design, and plumbing disinfection consulting tasks. For potential new school sites, assignments include initial due diligence, Phase I environmental site assessments (ESAs) and multi-media subsurface investigation of soil, groundwater, and soil vapor to determine the suitability of a site for development as a school, likely remediation requirements, and associated costs. For sites undergoing design and development, assignments include preparation of remediation plans, design of sub-slab depressurization systems (SSDS) and contract specifications, and construction oversight. The work has also included conducting Phase I ESAs and

indoor air quality testing, preparation of specifications, supervision of storage tank removals, and investigation and remediation of spills for existing schools. Due to the sensitivity of school sites, work under this contract is often conducted on short notice and during non-school hours. Ms. Lapin is the QA/QC officer for all of the SCA hazardous materials assignments and the Professional Engineer (P.E.) of record for the various remediation systems, including SSDS. In addition, Ms. Lapin is also the QA/QC officer for the lead in drinking water and plumbing disinfection tasks also under AKRF's on-call hazardous materials consulting contract with the NYCSCA. AKRF performed lead in drinking water sampling in about 160 schools during two three-month periods in 2016 and 2017 and continues to provide lead sampling, reporting, and recommendations as new plumbing is installed. AKRF also oversees plumbing disinfection work, which is required prior to new plumbing being placed into service. The assignments involve reviewing and commenting on disinfection plans, supervision of the disinfection and confirmation testing, and preparation of reports documenting that the work was conducted in accordance with the specifications and applicable requirements. As with the Phase I/II studies, work under the lead testing and plumbing disinfection contract is often conducted on short notice during non-school hours.

MARC S. GODICK, LEP

SR. VICE PRESIDENT

Marc S. Godick, a Senior Vice President of the firm, has over 27 years of experience in the environmental consulting industry. Mr. Godick has broad-based environmental experience includes expertise in brownfield redevelopment, site assessment, remedial investigation, design and implementation of remedial measures, compliance assessment, and litigation support.

Education

M.E., Engineering Science/Environmental Engineering, Pennsylvania State University, 1998

B.S., Chemical Engineering, Carnegie Mellon University, 1989

Licenses/Certifications

Licensed Environmental Professional (License # 396) – State of Connecticut – 2003 - Present

40 Hour HAZWOPER and Annual Refresher Training, 1990 - Present

Supervisors of Hazardous Waste Operations (8 Hour), 1990

Professional Memberships

Chairman, Village of Larchmont/Town of Mamaroneck Coastal Zone Management Commission, 1997 – Present

Member, Westchester County Stormwater Advisory Board, 2011 – Present

Chairman/Member, Westchester County Soil and Water Conservation District, 2005 - 2010

Board of Directors, Sheldrake Environmental Center, Larchmont, New York, 2006 - 2008

Member, NYSDEC Risk-Based Corrective Action (RBCA) Advisory Group for Petroleum-Impacted Sites, 1997

Community Leadership Alliance, Pace University School of Law, 2001

Years of Experience

Year started in company: 2002

Year started in industry: 1990

RELEVANT EXPERIENCE

New York City Department of Design and Construction, East Side Coastal Resiliency, Manhattan, NY

Mr. Godick leads the environmental investigation and related support for a multidisciplinary design team selected by the New York City agency partnership of DDC, DPR, and ORR for the Feasibility Study and Pre-Scoping Services for East Side Coastal Resiliency (ESCR) project. The AKRF Team is providing design services, for 100+ year storm protection with anticipated sea level rise along the east side of Lower Manhattan. The ESCR subsurface exploration program involved a review of available utility plans and environmental reports involving manufactured gas plant (MGP) and potential petroleum-related contamination along a 2.5 mile study area from Montgomery Street to East 25th Street to develop a Subsurface Investigation Work Plan, which was approved by the NYCDEP.

The program included both public and private utility mark-out services across vast areas of the project site containing critical infrastructure to enable the installation of numerous shallow and deep borings and groundwater wells. Mr. Godick supervised the implementation of the investigation, which was completed in two phases. He was also responsible for the interpreting the wide-range of chemical parameters to evaluate critical cost and environmental impacts for the City and design team, and to prepare technical reports for submission and approval by the NYCDEP to satisfy for City Environmental Quality Review (CEQR) requirements. In addition, he

continues to support the design and environmental review team, including preparation of the Hazardous Materials chapter for the Environmental Impact Statement, estimating cost impacts to the project for design and cost recovery purposes, and developing a Soil Management Plan. Mr. Godick also managed a hydrogeologic modeling study to evaluate potential hydraulic and contaminant migration impacts associated with construction of the proposed flood control structure. Mr. Godick continues to coordinate with the NYC team, NYSDEC, and Con Edison to ensure that the design incorporates appropriate remedial measures to be implemented prior to and/or in conjunction with construction.

Remedial Design, Gowanus Canal First Street Turning Basin, New York City Department of Design and Construction (DDC)

Mr. Godick is managing the remedial design for restoration of the filled-in former First Street Turning Basin in Brooklyn, New York. The remediation is being conducted as part of an Order of Consent between the City of New York and EPA for the Gowanus Canal Superfund Site. The remedial design will include removal of fill and sediment within the fill-in basing in an approximately 475-foot by 50-foot area. The restored basin will provide enhanced waterfront access to the community and a boat launch for canoes and kayaks. Design considerations include geotechnical concerns related to adjacent buildings and new, existing bulkheads; soil, and water management; landscape design; and access/construction logistics. The design in anticipated to be completed in late 2017.

Remediation & Litigation Support, 3200 Jerome Avenue, Bronx, NY (Former PS 151)

Mr. Godick managed the investigation and remediation of a former public school in the Bronx under the New York State Department of Environmental Conservation (NYSDEC) Brownfields Cleanup Program (BCP). The site was contaminated with trichloroethylene (TCE) from historic operations at the property prior to use as a school. The remedial investigation included soil, groundwater, and vapor intrusion assessment both on-site and off-site. The remedial design included excavation of the source area, in-situ chemical oxidation of groundwater, and installation of a sub-slab depressurization system (SSDS) to address to potential vapor intrusion. Implementation of the remedy was complete in late 2014. The completed remediation allows for future multi-family residential, educational, childcare, and/or medical uses. Mr. Godick also provided litigation support in connection with a cost recovery claim against the former operator of the site.

Remediation & Litigation Support, Queens West Project, Avalon Bay Communities, Queens, NY

For over 20 years, AKRF has played a key role in advancing the Queens West development, which promises to transform an underused industrial waterfront property into one of largest and most vibrant mixed-use communities just across the East River from the United Nations. AKRF prepared an Environmental Impact Statement (EIS) that examines issues pertaining to air quality, land use and community character, economic impacts, historic and archaeological resources, and infrastructure. As part of this project, Mr. Godick managed one of the largest remediation projects completed under the NYSDEC BCP at the time that was contaminated by coal tar and petroleum. The remedy included the installation of a hydraulic barrier (sheet pile cut off wall), excavation of contaminated soil under a temporary structure to control odors during remediation, a vapor mitigation system below the buildings, and implementation of institution controls. The investigation, remediation design, and remedy implementation, and final sign-off (issuance of Certificate of Completion) were completed in two years. Total remediation costs were in excess of $13 million. Following completion of the remediation, Mr. Godick developed a cost allocation model and provided litigation support for a cost recovery action against a former operator of the site, including participation in a deposition as a fact witness prior to settlement between the parties.

On-Call Environmental Consulting Services (Various Locations), New York City Mayor's Office of Environmental Remediation (OER) (administered by NYCEDC)

Mr. Godick is managing an on-call contract with the OER for brownfields environmental assessment and remediation. The work has included conducting Phase I environmental site assessments (ESAs) and multi-media

sampling of soil, groundwater, and soil vapor for various sites funded by EPA grants. The work plans and investigation reports were completed in accordance with OER and EPA requirements. AKRF also developed a remedial plan for a former gas station site in the Bronx and implemented a remedial plan for capping a park site in Staten Island. In addition, Mr. Godick is providing support to OER and an affordable housing developer to expedite an application for entry into the New York State Department of Environmental Conservation (NYSDEC) Brownfield Cleanup Program (BCP), as well as preparation and implementation of the remedial investigation and remedial plan.

On-Call Environmental Consulting (Various Locations), New York City School Construction Authority

Mr. Godick is managing an on-call contract with the SCA for environmental assessment, remedial design, and plumbing disinfection. For new school sites, initial due diligence involves conducting Phase I environmental site assessments (ESAs) and multi-media sampling of soil, groundwater, and soil vapor to determine the suitability of a site for development as a school and remediation requirements and associated costs. Once design for a school is underway, AKRF would prepare remediation plans and construction specifications and oversee the construction activities. For existing school sites, the work can involve conducting Phase I ESAs and indoor air quality testing, preparation of specifications, supervision of storage tank removals, investigation and remediation of spills, and development of remediation cost estimates. AKRF also oversees plumbing disinfection work, which is required prior to new plumbing being placed into service. The assignments involve reviewing and commenting on disinfection plans, supervision of the disinfection and confirmation testing, and preparation of a report documenting the work was conducted in accordance with the specifications and applicable requirements. Due to the sensitivity of school sites, work under this contract is often conducted on short notice and during non-school hours. Mr. Godick also manages AKRF's potable water sampling (for lead) work for SCA, including providing recommendations for mitigating exceedances.

Remediation, Former Industrial Laundry/Dry Cleaning Plant, 2350 Fifth Avenue. New York, NY

Mr. Godick managed the assessment, cleanup and post-remedial operations, maintenance and monitoring of the only NYSDEC listed inactive hazardous waste (State Superfund) site in Manhattan, a former laundry/dry cleaning plant in Harlem. Remedial investigation included evaluation of soil, groundwater, soil vapor, indoor air, and building materials. Interim remediation included the removal of contaminated building materials and operation of a sub-slab vapor extraction system retrofitted into the existing building. Mr. Godick coordinated with the regulatory agencies, site owner and occupants; and managed the investigation, remedial design, and remedial implementation activities. Phase 1 of the Remedial Action Work Plan consisted of further removal of contaminated building materials. Phase 2 of the remediation included a sub-slab depressurization system (SSDS) retrofitted into the existing building, soil vapor extraction (SVE) system, and chemical oxidation injection. Remedial action work was completed in 2014 and documented in a Final Engineering Report. NYSDEC issued Certificate of Completion in January 2015 and the site has been reclassified to a "Class 4" site (site properly closed – requires continued management). Mr. Godick continues to manage the project, including operations, maintenance and monitoring of the SSDS and SVE system under the NYSDEC-approved Site Management Plan.

606 West 57th Street, New York, NY, TF Cornerstone

AKRF has been retained by TF Cornerstone to provide environmental services for the proposed redevelopment of a portion of the block bounded by Eleventh and Twelfth Avenues and West 56th and 57th Streets. The proposed actions included a zoning map amendment, zoning text amendments, a special permit, and an authorization to facilitate development of approximately 1.2 million square feet of residential and retail space. AKRF prepared an Environmental Impact Statement (EIS) for the New York City Department of City Planning (DCP) to analyze the effects of the proposed actions and development of the proposed building. The EIS addressed the full range of environmental impacts associated with the proposed development.

Mr. Godick was responsible for the elements of the EIS pertaining to hazardous materials, including coordination of a Phase I ESA and summarizing pertinent site information for the hazardous materials and construction

chapters. Mr. Godick provided pre-acquisition support to TF Cornerstone, which included development of a remedial cost estimate report to outline remediation cost during site development. Mr. Godick also managed work related to the subsurface investigation, localized remediation (chemical injection and limited excavation beneath the building basement) and regulatory closure of a petroleum spill on a portion of the project site to satisfy NYSDEC requirements. After EIS certification, Mr. Godick coordinated approvals with NYCOER, the regulatory agency overseeing remedial measures related to the redevelopment of the site. The Site has an (E) Designation and is participating in the New York City Voluntary Cleanup Program. Mr. Godick managed the preparation of a Phase II Investigation Work Plan, Remedial Investigation Report, Remedial Action Work Plan (RAWP), and contractor specifications for soil management and tank and hydraulic lift removal. Mr. Godick managed implementation of the remediation in accordance with the RAWP.

164 Kent Avenue, Brooklyn, NY (AKA Northside Piers and 1 North 4th Place), RD Management, L&M Development, Toll Brothers, and Douglaston Development

The project was a multi-phase development consisting of a large waterfront block in the Williamsburg Rezoning Area. The project site has been developed with mixed-use residential-commercial high-rise towers with an esplanade and a pier along the East River. AKRF provided acquisition and development support, including performing Phase I and II environmental site assessments and development of remedial cost estimates for development, and preparation of Remedial Action Plans (RAPs) and Construction Health and Safety Plan (CHASPs) for approval by DEP and OER. AKRF provided assistance with construction oversight during soil handling activities and managing the Community Air Monitoring Plan (CAMP) activities. Closure reports were prepared and the project is fully built-out and occupied.

Site Investigation–Over 20 Facilities, Con Edison, New York, NY

Mr. Godick managed site investigations associated with petroleum, dielectric fluid, and PCB releases at over 20 Con Edison facilities including service centers, substations, generating stations, and underground transmission and distribution systems. Site investigations have included due diligence site reviews, soil boring installation, monitoring well installation, hydrogeologic testing, and water quality sampling. Risk-based closures were proposed for several sites.

Underground Storage Tank Closure and Site Remediation–Program Management, Con Edison, New York, NY

Mr. Godick provided technical assistance to Con Edison in developing technical submittals and budgets associated with tank closures at over 50 facilities. Technical summaries were prepared for submittal of contractor-prepared closure reports to the NYSDEC. The summaries included a review of historic pre-closure assessments, tank closure data, and provided recommendations for additional assessment, remediation or closure. Subsequently, a three-year program budget was developed for implementation of the UST investigation/remedial program, which Con Edison utilized for internal budgeting purposes.

Site Investigation–7 World Trade Center Substation, Con Edison, New York, NY

Mr. Godick managed the site investigation at the former 7 World Trade Center Substation in an effort to delineate and recover approximately 140,000 gallons of transformer and feeder oil following the collapse of the building. The project involved coordination with several crews, Con Edison, and other site personnel.

Site Investigation–Former Manufactured Gas Plant (MGP) Facilities, Con Edison, New York, NY

Mr. Godick managed site investigations at four former manufactured gas plant (MGP) facilities. The investigations were completed at Con Edison substations, a flush pit facility, and a service center to support remedial design and expansion at select locations. The findings from these characterizations were used by Con Edison to make appropriate changes to the design specifications and to plan for appropriate handling of impacted materials and health and safety protocols during future construction activities.

National Grid – Halesite Manufactured Gas Plant Site Remediation, Town of Huntington, NY

Mr. Godick managed the remedial design and engineering work associated with remediation of National Grid's former MGP located in the Town of Huntington. The site is situated in a sensitive location along the waterfront, surrounded by commercial and residential properties, and half the property where the remediation was conducted was a steep slope. The remedy consisted of soil removal, oxygen injection, and non-aqueous phase liquid recovery. Mr. Godick was responsible for the development of the remedial work plans, design/construction documents, landscape architecture, confirmatory sampling, air monitoring, supervision, and preparation of closeout documentation in accordance with NYSDEC requirements.

Verizon, Investigation & Remediation, Various Locations, NY, PA and DE

Mr. Godick managed over 50 environmental investigations and remediation projects related to petroleum releases at various facilities. Responsibilities included annual budgeting, day-to-day project management, development and implementation of soil and ground water investigation workplans, ground water modeling, risk evaluation, remedial action work plans, remedial design, system installation, waste disposal, well abandonment, and operation and maintenance. Many of the assessment and remedial projects followed a risk-based approach. Remedial technologies implemented included air sparging, soil vapor extraction, bioremediation, pump and treat, soil excavation, and natural attenuation.

Storage Tank Management, Verizon, Various Locations, NY, PA, DE, and MA

Mr. Godick managed the removal and replacement of underground and aboveground storage tank systems for Verizon in New York, Pennsylvania, Delaware, and Massachusetts. Responsibilities included the management of design, preparation of specifications, contractor bidding, construction oversight, project budget, and documentation. For selected AST sites, managed the development of Spill Control, Contingency and Countermeasures (SPCC) plans.

Litigation Support, Cost Recovery Action, Gowanus Superfund Site, New York

Mr. Godick provided technical support to one of the 40+ potential responsible parties (PRPs) associated with a Federal Superfund site in New York State, which included conducting a liability assessment for the various parties and development of a cost allocation model.

Litigation Support, Cost Recovery Action, New York State Superfund Site

Mr. Godick provided technical support for the former owner of a New York State Superfund site in upstate New York. The owner of the property brought a cost recovery action against our client as a PRP. Mr. Godick completed a technical review of the draft Remedial Investigation/Feasibility Study prepared by the opposing party's consultant to develop a more cost effective remedial strategy and to better position the client for liability allocation as part of future settlement negotiations. Mr. Godick also developed a cost allocation report that included a model for settlement negotiations, as well as participated in mediation.

Litigation Support & Remediation, Former Service Station, Brooklyn, New York

Mr. Godick took over management of remediation of an inactive service station (formerly conducted by another firm). His approach outlined additional characterization and remediation efforts, which resulted in successful closure of the spill by NYSDEC within two years. Mr. Godick testified as an expert witness at a hearing in the New York State Supreme Court of Kings County to determine the adequacy of the remediation efforts.

Litigation Support, Cost Recovery Action, Town of Carmel, New York

Mr. Godick served as an expert witness representing the owner of a property in a landlord-tenant dispute, which was used as a gasoline station and oil change facility. Mr. Godick prepared exhibits, testified, and participated in

meetings with NYSDEC to support the landlord's claim that the oil change tenant's practices were poor and were adversely affecting the environment and the overall facility systems at the site.

Litigation Support, Cost Recovery Action, New York State Petroleum Spill Site, New York, NY

Mr. Godick provided technical support for the former owner of a New York City multi-unit residential apartment building. The State of New York brought a cost recovery action against our client as a result of a previous spill from a former underground storage tank. Mr. Godick reviewed invoices and project documentation to dispute work performed by the NYSDEC, which provided the basis for settlement at a fraction of the initial claim.

Litigation Support, Class Action Lawsuit, Confidential Client, NJ

Mr. Godick provided technical support for a class action suit involving a petroleum-impacted community water supply in southern New Jersey. The technical assistance included analysis of expert testimony and coordination with legal counsel in preparing for cross-examination of the opposing party's lead expert witness.

Cost Analysis, Environmental Insurance Claims, Various Locations

Mr. Godick provided technical support for cost analyses completed for a large national insurance company related to several former MGP and other industrial sites. Responsibilities included evaluation and development of cost-effective remedial strategies, as well as compilation of detailed costs for remedial action implementation and closure.

AMY T. JORDAN

GEOSCIENTIST

Amy Jordan is a geoscientist with over six years of environmental consulting experience related to site assessment and remediation from the initial proposal and assessments of properties through post-remedial site management under regulatory oversight of local, state, and federal agencies. Ms. Jordan conducts and manages all aspects of redevelopment projects from the initial proposal and assessments of properties through post-remedial site management under regulatory oversight of local, state, and federal agencies. Ms. Jordan works with non-profit organizations, affordable housing developers, for-profit developers, and government agencies under the regulatory oversight of the New York State Department of Environmental Conservation (NYSDEC), the New York City Department of Environmental Protection (NYCDEP), and the New York City Office of Environmental Remediation (NYCOER). Ms. Jordan manages projects enrolled in the New York State Brownfield Cleanup Program (BCP), the New York City Voluntary Cleanup Program (VCP), NYSDEC petroleum spills program, and NYCOER's E Designation program. Her management skill set is supported by several years of fieldwork, including: oversight of remedial construction activities; soil, groundwater, and soil vapor sampling; Phase I Environmental Site Assessments; Subsurface and Remedial Investigations; design, operation, and maintenance of engineering controls, including sub-slab depressurization and soil vapor extraction systems; oversight and sampling of direct-push, sonic, and hollow stem auger drilling; waste characterization, handling, and disposal; and petroleum bulk storage closure.

BACKGROUND

Education

B.A. Geosciences, Franklin and Marshall College, Lancaster, PA, 2011
M.S. Geology, University of Pennsylvania, Philadelphia, PA, Expected 2020

Licenses/Certifications

40 Hour OSHA HAZWOPER
OSHA 10 Hour Occupational Construction Safety and Health
NYSDEC Erosion and Sediment Control Inspector
Amtrak Track Safety
New York State Asbestos Inspector

Years of Experience

Year started in company: 2012
Year started in industry: 2011

RELEVANT EXPERIENCE

Manhattan West Southeast Tower - Manhattan, NY – New York City Office of Environmental Remediation (NYCOER) E Designation Program and United States Environmental Protection Agency (USEPA)

AKRF is providing environmental consulting services to Brookfield Office Properties in connection with the Manhattan West development site, which encompasses an entire city-block above the Amtrak approach to Penn Station. The four towers that comprise the Manhattan west development site are being remediated as four different sites under the NYCOER, due to an E Designation for hazardous materials, air quality, and noise attenuation. Ms.

Jordan is currently managing the environmental work required for the NYCOER E Designation at the Southeast Tower site. In addition, due to the presence of polychlorinated biphenyls (PCBs) within the subterranean railyard, Ms. Jordan designed and prepared the Self-Implementing Cleanup Plan in coordination with the USEPA. Upon approval of the remedial plans, Ms. Jordan oversaw the remediation activities to ensure compliance with the SICP in accordance with the Toxic Substance and Control Act (TSCA); and is preparing to implement the NYCOER RAWP on the street-grade portion of the project.

12 Eckford Street – Brooklyn, New York – New York State Department of Environmental Conservation (NYSDEC) Brownfield Cleanup Program (BCP)

AKRF is providing environmental consulting services in connection with the redevelopment of a former manufacturing property into a mix of affordable and market-rate residential units. Ms. Jordan manages the environmental consulting services in connection with the redevelopment of this property into a mix of affordable and market-rate residences in the BCP. For this project, I have developed and conducted several subsurface investigations at the property under the oversight of NYC agencies. Ms. Jordan prepared the BCP application after analytical data identified chlorinated solvent contamination at the property. She designed and conducted a soil vapor extraction (SVE) pilot test, developed and authored a remedial action plan including the design of an SSDS and SVE system, and hazardous waste delineation and disposal. After construction oversight, ongoing remedial monitoring under the oversight of NYSDEC will culminate with a Final Engineering Report (FER).

Atlantic Chestnut Lots 1, 2, and 3 – Brooklyn, New York – New York State Brownfield Cleanup Program

AKRF is providing environmental consulting services in connection with the purchase and redevelopment of an entire city block, from a burned manufacturing facility into three mixed-use commercial and affordable rental unit buildings. Ms. Jordan prepared a Phase I Environmental Site Assessment (ESA), conducted three subsurface investigations, and prepared three BCP Applications. She developed supplemental investigation work plans for the design of remedial actions and to aid in the design of in-situ groundwater treatment related to chlorinated solvent contamination in soil, groundwater, and soil vapor across the three sites. Prior to implementation of the remedial action, Ms. Jordan is designing and preparing three soil vapor extraction (SVE) systems The work will include construction oversight, ongoing remedial monitoring under the oversight of the NYSDEC, and will culminate with a FER.

Brook 156 - Bronx, New York – NYSDEC BCP

AKRF is providing environmental consulting services to Phipps Houses in connection with the purchase and development of two lots located at 740 Brook Avenue in the Bronx, NY. Before writing the New York State Brownfield Cleanup Program (NYSBCP) application, which was accepted by the State, AKRF prepared a Phase I Environmental Site Assessment (ESA) of the site (a former gasoline service station and railroad) and also conducted Tier 1 Vapor Encroachment Screening to satisfy HUD's vapor intrusion requirements, and prepared a Remedial Investigation Work Plan (RIWP) and a Remedial Investigation (RI) at the site. AKRF prepared a Citizen Participation Plan (CPP), distributed public notices, and prepared a Supplemental Remedial Investigation Work Plan (SRIWP) to further investigate soil, soil vapor, and groundwater at the site prior to redevelopment. Based on the results of the Supplemental Remedial Investigation (SRI), AKRF reported a petroleum spill to NYSDEC. Ms. Jordan prepared the Remedial Action Work Plan (RAWP), which included the design of an active SSDS and an SVE system. Ms. Jordan also acts as the project manager for client and agency correspondence and will oversee implementation of the RAWP.

Elton Crossing – Bronx, New York – NYSDEC BCP

AKRF provided environmental consulting services in connection with the purchase and redevelopment of this property into mixed-use commercial space and low-income rental units. Ms. Jordan prepared the Phase I ESA report, conducted several investigations including the installation of bedrock monitoring wells, and a BCP application. Ms. Jordan managed all aspects of the cleanup, including the development of supplemental work plans, the remedial action, and citizen participation documents. She managed the implementation of the remedial

action, including petroleum storage tank removal, soil brokering and disposal, and hazardous waste delineation and disposal. She prepared the FER and the Site Management Plan (SMP) for the institutional and engineering controls and authored the winning NYC Big Apple Brownfield Award application for the project in Spring 2017.

3363-3365 Third Avenue, Bronx, New York – NYCOER VCP

AKRF provided environmental consulting services in connection with the proposed affordable housing development at 3363-3365 Third Avenue. The proposed project consists of a residential building with a basement and approximately 30 affordable housing units. Ms. Jordan prepared Phase I ESA for due diligence purposes and to support an application to the New York City Acquisition Fund. The Phase I identified recognized environmental conditions as well as an E- Designation from the Morrisania Rezoning Action. Ms. Jordan is assisting the client with satisfying the E –Designation and has prepared and implemented a Remedial Investigation Work Plan, performed a Remedial Investigation, prepared a Remedial Action Work Plan, and Phase I ESA update for the New York City Acquisition Fund under the regulatory oversight of the New York City Mayor's Office of Environmental Remediation (NYCOER). The Remedial Investigation included soil, soil vapor, groundwater and ambient air sampling. AKRF is preparing the Remedial Action Work Plan for the site and assisted the client with enrollment into NYCOER's Voluntary Cleanup Program. The site is scheduled to break ground in the Spring of 2016.

VICTOR CHANG, EIT

ENVIRONMENTAL ENGINEER

Mr. Chang is an Environmental Engineer in AKRF's Hazmat department with two years of environmental consulting experience in site assessment and remediation. At AKRF, Mr. Chang conducts aspects of redevelopment projects from the initial Phase I ESA, Phase II Site Investigation, and remediation through post-remedial site management. His field work experience includes environmental site assessments and investigations (surface water, groundwater, soil, indoor air, and soil vapor), energy audits, construction oversight, safety supervisor, and waste management.

BACKGROUND

Education

Pursuing Masters of Engineering, Environmental Engineering, Stevens Institute of Technology, Hoboken, NJ

B.S., Environmental Engineering, *cum laude*, University at Buffalo, The State University of New York, UB School of Engineering and Applied Sciences, 2015

Certifications

Engineer-in-Training
OSHA 40-Hour Hazwoper
OSHA 30-Hour Construction
OSHA 8-Hour Supervisor
First Aid/CPR/AED

Years of Experience

Year started in company: 2017
Year started in industry: 2015

RELEVANT EXPERIENCE

AKRF – Various Projects, NY

Since joining AKRF, Mr. Chang has provided environmental consulting services on various projects. Mr. Chang has been involved with various environmental projects including Phase I Environmental Site Assessments (ESAs); Phase II (Subsurface) Environmental Site Investigations (soil, groundwater, and soil vapor intrusion investigations); Indoor Air Quality (IAQ) Assessments, and Construction Oversight (including community air monitoring, vapor barrier/SSDS installations, waste classification and delineation), as well as the proposals, work plans, and reporting associated with these tasks.

Merck OER and ACM Removal Project

While at another employer, Mr. Chang served as Site Superintendent, where his responsibilities included:

- Providing management and safety oversight for obsolete equipment and asbestos removal project;
- Assisting project manager with plans, schedules, costs, and overseeing sub-contractors;
- Participating actively in meetings, presentations, and Merck safety culture to foster client relationships; and

- Overseeing environmental compliance and monitoring (stormwater, waste management, air monitoring, excavation/confined spaces).

O'Brien & Gere Edison, NJ

While at another employer, Mr. Chang served as a Staff Environmental Engineer, where his responsibilities included:

- Supporting engineering projects through providing remedial oversight, calculations, and data analysis;
- Facilitating execution and supporting remediation projects including proposals, reports, designs, and workplans; and
- Performing and supervising field work (sampling, investigation, monitoring) for soil, vapor intrusion, groundwater, surface water.

En-Power Group Manhattan, NY

While at another employer, Mr. Chang served as an Energy Analysis and Field Intern, where his responsibilities included:

- Assisting lead engineers in the field conducting complete energy audits for multi-family buildings;
- Performing and evaluating feasibility, energy savings, and cost-benefit analysis for energy efficiency measures; and
- Producing energy efficiency reports including level I, II, and III audits for clients and the city.

Go Solar Green NY Queens, NY

While at another employer, Mr. Chang served as a Solar Design and Marketing Intern, where his responsibilities included:

- Applying solar theory and design to residential and commercial spaces;
- Performing cost and energy production estimates for small-scale solar systems; and
- Qualifying and contacting prospective clients for distribution of marketing materials.

APPENDIX F

SITE MANAGEMENT FORMS

Site Management Form – General Inspection
New 470 Project (BCP Site No. C224242)
12 Eckford Street, Brooklyn, New York

Inspector:

Date:

1. Site Use Restrictions

No on-site vegetable gardens?

No groundwater withdrawal for potable/non-potable use?

Restricted residential use maintained?

2. Site Cap

Note the date that the annual site cap inspection was performed.

Repairs made as noted during inspection?

3. Soil Management

Note the date(s) of any soil disturbance activities conducted during the past year.

Proper soil management procedures implemented (cite appropriate close-out reports)?

4. Recordkeeping

Check that the following records/reports are being maintained/completed (note report/log dates as appropriate):

1) Annual site cap inspection log:

2) Close-out report(s) for soil disturbance activities (including manifests for soil disposal):

5. Comments

Soil Vapor Extraction System Inspection
New 470 Project, 12 Eckford Street, Brooklyn, New York

Inspector Name:	**Date:**
Time In:	**Time Out:**

GENERAL

Weather:	Exterior Temperature:	°F	Barometric Pressure:	inHg	Equipment Room Temperature:	°F	Equipment Room PID Reading:	ppm

When was the last rain event?

Is the blower currently operating? Yes / No (circle one)

If no, ALERT PROJECT MANAGER and list reason/alarm condition and fill out the shut down log:

What is the VFD setting (Hz reading on VFD panel)?

If under 20 Hz, ALERT PROJECT MANAGER:

Is there any condensate in knockout tank? Yes / No (circle one)

If yes, document amount of condensate and ALERT PROJECT MANAGER.

Then, drain condensate manually. Note PID readings, odor, sheen, clarity, sediment, etc.

Is the condensate knockout tank high-high float sensor working (unscrew float alarm assembly and manually trigger alarm, clear alarm on control panel afterwards)? Yes / No (circle one)

If no, ALERT PROJECT MANAGER.

Is control panel communicating remotely (confirm PM received moisture tank test alarm)? Yes / No (circle one)

Any evidence of system tampering, vandalism or damage? Yes / No (circle one)

If yes, ALERT PROJECT MANAGER and please note findings:

Are the control panel and all gauges clean, legible, and operational? Yes / No (circle one)

If no, ALERT PROJECT MANAGER and please note findings:

Any evidence of alterations, damage, and/or loose piping along aboveground piping and system equipment room? Yes / No (circle one)

If yes, ALERT PROJECT MANAGER and please note findings below and on a figure and with photographic documentation:

Notes: PID - Photoionization Detector; ppm - parts per million; NA - Not applicable; GAC - Granular Activated Carbon

This SVES Inspection Log should be completed along with the sampling log for each sampling event.

Emergency Contact Information

Name	Title	Contact Number
Marc Godick	AKRF Project Director	914-922-2356 (office), 917-991-4030 (cell)
Amy Jordan	AKRF Project Manager	646-388-9864 (office), 610-405-2847 (cell)
Ron Walker	Owner's Representative	631-234-1600 (office)

New 470 Project - Soil Vapor Extraction System O&M CALL PROJECT MANAGER IF READING OUTSIDE ACCEPTABLE RANGE					
Parameter	**Field ID**	**Unit**	**Acceptable Range**	**Value**	**Within Acceptable Range (circle one)?**
Individual Legs					
SVES-01					
SVES-01 Vacuum	FE-202	inH_2O	5-25		Y N
SVES-01 Air Flow Rate	FI-202	inH_2O scfm	20-100		Y N
SVES-02					
SVES-02 Vacuum	FI-204	inH_2O	5-25		Y N
SVES-02 Air Flow Rate	FE-204	inH_2O scfm	20-100		Y N
SVES-03					
SVES-03 Vacuum	FI-201	inH_2O	5-25		Y N
SVES-03 Air Flow Rate	FE-201	inH_2O scfm	20-100		Y N
SVES-04					
SVES-04 Vacuum	FI-203	inH_2O	5-25		Y N
SVES-04 Air Flow Rate	FI-203	inH_2O scfm	20-100		Y N
Pre-Blower					
Pre-Blower Temperature	T-201	°F	< 100		Y N
Pre-Dilution Inlet Vacuum	VI-205	inH_2O	record result		N/A
Dilution Line Air Flow Rate	FI-205	inH_2O scfm	record result		N/A
Post-Filter Vacuum	VI-207	inH_2O	5-25		Y N
Post-Blower					
GAC Influent Pressure	PI-201	inH_2O	< 25		Y N
GAC Influent Temperature	TI-204	°F	< 125		Y N
GAC Influent VOC	PI-201	PPM	record result		N/A
GAC Intermediate Pressure	PI-202	inH_2O	<15		Y N
GAC Intermediate VOC	PI-202	PPM	< GAC Influent VOC		Y N
GAC Effluent Pressure	PI-203	inH_2O	<5		Y N
GAC Effluent VOC	PI-203	PPM	< GAC Intermediate VOC		Y N
Discharge Flow Rate?	PI-203	inH_2O scfm	> 100		Y N
Vapor Monitoring Points					
VMP-01 Vacuum	VMP-01	inH_2O	> 0.04		Y N
VMP-02 Vacuum	VMP-02	inH_2O	> 0.04		Y N
VMP-03 Vacuum	VMP-03	inH_2O	> 0.04		Y N
Comments:					

Emergency Contact Information		
Name	**Title**	**Contact Number**
Marc Godick	AKRF Project Director	914-922-2356 (office), 917-991-4030 (cell)
Amy Jordan	AKRF Project Manager	646-388-9864 (office), 610-405-2847 (cell)
Ron Walker	Owner's Representative	631-234-1600 (office)

Sub-Slab Depressurization System Inspection
New 470 Project, 12 Eckford Street, Brooklyn, New York

Inspector Name:	**Date:**
Time In:	**Time Out:**

GENERAL

Weather:	Exterior Temperature:	°F	Barometric Pressure:	inHg	Equipment Room Temperature:	°F	Equipment Room PID Reading:	ppm

When was the last rain event?

Is the SSDS fan currently operating? Yes / No (circle one)

If no, ALERT PROJECT MANAGER and list reason/alarm condition and fill out the shut down log:

What is the VFD setting (Hz reading on VFD panel)?

If under 20 Hz, ALERT PROJECT MANAGER:

Is control panel communicating remotely? Yes / No (circle one)

Any evidence of system tampering, vandalism or damage? Yes / No (circle one)

If yes, ALERT PROJECT MANAGER and please note findings:

Are the control panel and all gauges clean, legible, and operational? Yes / No (circle one)

If no, ALERT PROJECT MANAGER and please note findings:

Any evidence of alterations, damage, and/or loose piping along aboveground pipe runs and system equipment room? Yes / No (circle one)

If yes, ALERT PROJECT MANAGER and please note findings below and on a figure and with photographic documentation:

Notes: PID - Photoionization Detector; ppm - parts per million; NA - Not applicable
This SSDS Inspection Log should be completed along with the sampling log for each sampling event.

Emergency Contact Information

Name	Title	Contact Number
Marc Godick	AKRF Project Director	914-922-2356 (office), 917-991-4030 (cell)
Amy Jordan	AKRF Project Manager	646-388-9864 (office), 610-405-2847 (cell)
Ron Walker	Owner's Representative	631-234-1600 (office)

New 470 Project - Sub-Slab Depressurization System O&M CALL PROJECT MANAGER IF READING OUTSIDE ACCEPTABLE RANGE					
Parameter	**Field ID**	**Unit**	**Acceptable Range**	**Value**	**Within Acceptable Range (circle one)?**
Individual Legs					
SSDS-A					
SSDS-A Vacuum	VI-103	inH_2O	1-8		Y N
SSDS-A Air Flow Rate	FI-103	inH_2O scfm	20-100		Y N
SSDS-A VOC	VI-103	PPM	record result		N/A
SSDS-B					
SSDS-B Vacuum	VI-104	inH_2O	1-8		Y N
SSDS-B Air Flow Rate	FI-104	inH_2O scfm	20-100		Y N
SSDS-B VOC	VI-104	PPM	record result		N/A
SSDS-C					
SSDS-C Vacuum	VI-102	inH_2O	1-8		Y N
SSDS-C Air Flow Rate	FI-102	inH_2O scfm	20-100		Y N
SSDS-C VOC	VI-102	PPM	record result		N/A
SSDS-D					
SSDS-D Vacuum	VI-101	inH_2O	1-8		Y N
SSDS-D Air Flow Rate	FI-101	inH_2O scfm	20-100		Y N
SSDS-D VOC	VI-101	PPM	record result		N/A
Pre-Suction Fan					
Pre-Suction Fan Temperature	T-101	°F	record result		N/A
Pre-Suction Fan Vacuum	VI-105	inH_2O	max 9.5		Y N
Post-Suction Fan					
Effluent Pressure	PI-101	inH_2O	< 5		Y N
Effluent Temperature	TI-102	°F	record result		N/A
Effluent VOC	PI-101	PPM	record result		N/A
Vapor Monitoring Points					
VMP-01 Vacuum	VMP-01	inH_2O	> 0.04		Y N
VMP-02 Vacuum	VMP-02	inH_2O	> 0.04		Y N
VMP-03 Vacuum	VMP-03	inH_2O	> 0.04		Y N
Comments:					

Emergency Contact Information		
Name	**Title**	**Contact Number**
Marc Godick	AKRF Project Director	914-922-2356 (office), 917-991-4030 (cell)
Amy Jordan	AKRF Project Manager	646-388-9864 (office), 610-405-2847 (cell)
Ron Walker	Owner's Representative	631-234-1600 (office)