August 19, 2025

Mr. Richard Mustico
Environmental Engineer, Division of Environmental Remediation
New York State Department of Environmental Conservation
625 Broadway
Albany, NY 12233-7016

Re: Corrective Measures Work Plan No. 2
514 Union Street
Brooklyn, NY 11215
NYSDEC BCP Site No. C224318
Langan Project No.: 170361307

Dear Mr. Mustico,

Langan Engineering, Environmental, Surveying, Landscape Architecture and Geology, D.P.C. (Langan) prepared this Corrective Measures Work Plan (CMWP) No. 2 on behalf of Gowanus President Owner LLC (the Volunteer) for the property at 514 Union Street, Brooklyn, New York (the site). The Volunteer was accepted into the New York State Department of Environmental Conservation (NYSDEC) Brownfield Cleanup Program (BCP) to investigate and remediate the site pursuant to the NYSDEC Brownfield Cleanup Agreement (BCA) executed on October 21, 2021. A BCA Amendment to add the Volunteer, Gowanus President Owner LLC, was executed on February 1, 2023, and a BCA Amendment to add the west-adjoining property, 305 Nevins Street, to the BCP site was executed on July 19, 2023.

This CMWP was required due to elevated Trichloroethene (TCE) in indoor air and was requested by NYSDEC and NYSDOH on February 9, 2025. This CMWP summarizes the site background and documents the elevated TCE and corrective measures implemented to remedy the issue.

SITE BACKGROUND

The site consists of two contiguous parcels: 514 Union Street (Block 440, Lot 12) and 305 Nevins Street (Block 440, Lot 9) on the block bound by Union Street to the north, 3rd Avenue to the east, President Street to the south, and Nevins Street to the west, in the Gowanus neighborhood of Brooklyn, New York. The two parcels encompass an about 19,400-square-foot (SF) area improved with an about 17,000-SF one-story commercial building (514 Union Street) and an about 2,400-SF two-story, unoccupied building undergoing renovation (305 Nevins Street). 514 Union Street is occupied by the Royal Palms Shuffleboard Club. The site is adjoined to the east, south, and

west by BCP Site Nos. C224220/C224309 (473 President Street/President Street Portfolio), where a remedial system including air sparge, vapor collection, soil vapor extraction, and soil vapor intrusion mitigation systems have been operating since January 17, 2025. A site location map is provided as Figure 1.

Prior to occupancy by the Shuffleboard Club, the site operated as a manufacturing and storage warehouse. In 2013, the warehouse was retrofitted with an elevated wooden platform to support a new finished floor over the majority of the footprint. The building improvements include shuffleboard courts, an office, bars, restrooms, storage areas, and a loading dock. An about 2- to 10-inch-thick void space is present between the finished floor platform and the concrete building foundation slab. A site plan is included as Figure 2.

Chlorinated volatile organic compounds (CVOC) were detected in sub-slab vapor and indoor air samples collected during the March 2021 Limited Subsurface Investigation. An Interim Remedial Measures Work Plan (IRMWP) was developed to mitigate SVI into the 514 Union Street building. The July 2022 Interim IRMWP was approved by NYSDEC on July 29, 2022 and included installation and operation of an SVI mitigation system to mitigate potential vapor intrusion into the building. Based on this, the measures described below were implemented at the 514 Union Street parcel.

- <u>SVI Mitigation System Installation</u>

  The SVI mitigation system consists of four 4-inch-diameter metal riser ventilation points, extending from a roof-mounted blower to the existing space between the finished floor platform and the building slab, the "void space".

  AARCO Environmental Services Corp. (AARCO) installed the SVI system between August 31 and September 22, 2022. System startup was completed on September 22, 2022.The SVI mitigation system record drawings are provided as Attachment A.

- <u>February 2024 HVAC Modification and Air Purifier Unit Installation</u>

  Donnelly Mechanical Corp. (Donnelly), a commercial heating, ventilation, air conditioning (HVAC) contractor, inspected the building's HVAC system on February 22, 2024 following indoor sampling events in December and January. During the inspection, Donnelly noted that two energy recovery ventilation (ERV) units, ERV-1 and ERV-2, located on the roof of the central part of the building, intended to deliver about 2,500 cubic feet per minute (cfm) of fresh air into the building, were not operating. Donnelly turned on both ERVs and set them to run continuously. Following continuous ERV operations, two rounds of indoor air sample results collected in March and May 2024. TCE concentrations were below the NYSDOH AGVs in all samples. The ERVs are required to run continuously, and an alarm was installed to notify the project team if either unit stops running.

Additionally, two Airpura C600DLX air purifier units (APU) were installed in the office space on February 14 and 20, 2024. The air purifiers were equipped with 26 pounds of activated carbon each. The carbon filter in one of the units was replaced in November 2024 and in January 2025.

In accordance with the NYSDEC-approved June 21, 2023 Interim Site Management Plan (ISMP), a routine annual inspection of the soil vapor intrusion (SVI) mitigation system, including collection of four indoor air samples was completed on November 26, 2024. TCE was detected in each of the four indoor air samples at concentrations exceeding the New York State Department of Health (NYSDOH) Air Guideline Value (AGV) as set forth in the NYSDOH Guidance[1] for TCE of 2 micrograms per cubic meter (µg/m^3). All samples were below the NYSDOH recommended immediate action level of 20 µg/m^3. The elevated TCE in indoor air is further detailed below.

INDOOR AIR NYSDOH TCE AGV EXCEEDANCE

In accordance with the June 2023 ISMP, an annual site inspection and indoor air sampling event were performed on November 26, 2024, during the heating season. Four indoor air samples were collected from the main space and office space and one outdoor ambient air sample was collected. TCE was detected in each of the four indoor air samples at concentrations ranging from 4.23 to 4.98 µg/m^3 in the main building space, and at 12.8 µg/m^3 in the office space, above the NYSDOH AGV of 2 µg/m^3 but below the NYSDOH recommended immediate action level of 20 µg/m^3. The air purifiers were operating during the sampling event; however, the air purifiers were observed to be off during subsequent site visits on December 11, 12, and 13, 2024. It is unknown how often the air purifiers were operating leading up to the indoor air sampling event. Indoor air and ambient air sample analytical results are shown in Table 1. Previous sample results are also shown in the tables as reference. Sample locations are shown on Figure 3.

Langan received analytical results from the laboratory on December 10, 2024. NYSDEC was notified on December 11, 2024, and the tenant was notified on December 12, 2024, of the indoor sampling results and plans for further action on the site to assess further mitigation methods. NYSDEC and tenant notifications are included as Attachment B.

SVI mitigation system inspection logs, indoor air sampling logs, NYSDOH Indoor Air Quality Questionnaire and Building Inventory forms for the, and sample analytical laboratory reports are included as Attachment C, D, E, and F, respectively.

[1] NYSDOH Guidance refers to the NYSDOH October 2006 Guidance for Evaluating Soil Vapor Intrusion in the State of New York Decision Matrices for Sub-Slab Vapor and Indoor Air and subsequent updates (2013, 2015, 2017, and 2024).

CORRECTIVE MEASURES

The following corrective measures were implemented to investigate and address elevated TCE concentrations in indoor air.

Floor Drain Sampling

To determine if floor drains were a potential pathway of soil vapor intrusion into the building, 17 floor drains were screened for VOCs using a ppbRAE handheld photoionization detector (PID) on December 12 and 13, 2024. Floor drain PID readings ranged from 32 to 1,574 parts per billion (ppb). A plan showing floor drain PID readings is provided in Attachment G.

On December 23, 2024, five air samples were collected from floor drains where the highest PID readings were observed on December 12 and 13, 2024, as well as in general accordance with the NYSDOH "Guidance for Evaluating Soil Vapor Intrusion in the State of New York" (October 2006, with updates February 2024). The samples consisted of individually-certified 6-L Summa® canisters calibrated and fitted with 2-hour flow control valves. Langan screened the sample locations with a ppbRAE PID and connected 3/16-inch ID x 3/8-inch outer diameter silicone tubing to the canister and inserted it approximately 2 inches into the drain prior to sampling. The samples and flow controllers were checked periodically during sampling to document proper operation. TCE concentrations ranged between 0.204 and 0.530 µg/m^3.

Floor Drain Cover Installation

To mitigate potential vapor intrusion from the floor drains, 22 air-tight F Series Dranjer vapor drain covers were installed on January 29, 2025. Three floor drains were removed from the kitchen in the western part of the building, the bar in the southern part of the building, and the storage room in the southeastern part of the building on February 5 and 6, 2025 due to insufficient water drainage flow during peak business operation. Dranjer vapor drain product and installation sheet are provided in Attachment H.

HVAC Modifications

Indoor air screening performed in November 2024 indicated that fresh air was not being directly delivered to the extremities of the building, including the office. From January 15 to 17, 2025, EPIC Mechanical Contractors (EPIC) installed approximately 130 feet of ductwork, fitted with 13 vents extending from ERV-1. ERV-2 was also fitted with two additional vents to increase fresh air dispersion in the main building space.

Following the HVAC modifications, a handheld Velocicalc airflow meter was used to measure flow of fresh air into the office on February 14, 2025. Handheld airflow meter readings indicated that approximately 200 cfm of fresh air was being delivered to the office space via the new ductwork.

As-built drawings showing the HVAC modifications are included as Attachment I.

Air Purifying Unit Carbon Change

Langan visited the site on November 12, 2024 and on January 8, 2025 to replace one of the carbon air purifier filters. The APUs were temporarily shut off to conduct filter replacement, and subsequently resumed at about 40% speed.

The air purifier units were turned off on March 19, 2025 and remain off as of the date of submission of this work plan.

Void Space Communication

Langan visited the site on December 27, 2024, January 29, 2025 and February 11, 2025 to investigate SVI system communication within the void space below the office. During each visit, GGP Construction Management (GGP) removed floorboards in and around the office. Langan performed smoke tests in each location to determine if the underlying void space was sufficiently influenced by the SVI mitigation system, indicated by smoke infiltration into the void space. GGP removed floorboards and exposed the void space in five areas as follows:

- an approximately 6-inch by 6-inch area along the central wall in the inner office. Communication was not observed
- an approximately 6-inch by 6-inch area along the southern wall in the inner office. Communication was not observed
- an approximately 2-foot by 2-foot area along the southern wall in the outer office. Communication was observed
- an approximately 1-foot by 1-foot area along the eastern wall in the outer office. Communication was observed
- an approximately 1-foot by 1-foot area along the outside the eastern wall of the outer office, in the main building space. Communication was observed

During smoke testing, Langan observed SVI mitigation system influence outside the office, indicated by smoke infiltration into the void space. Langan did not observe SVI mitigation system influence within the inner office. Visual inspection revealed the inner office void space was separated from the surrounding area by a wooden frame and sheetrock wall.

GGP drilled communication holes laterally into the wooden frame and sheetrock wall to extend SVI mitigation system influence into the inner office void space. Langan performed another smoke test and observed smoke infiltration into the inner office void space, showing SVI mitigation system influence was achieved. Floor removal and the communication hole drilling areas are shown on Figure 5.

Post-Implementation Indoor Air Sampling

Langan performed two indoor air sampling events on January 28 and March 20, 2025.

On January 28, 2025, 11 days after completion of HVAC modifications and restart of the adjacent 473 President Street/President Street Portfolio air sparge/soil vapor extraction system, Langan collected four indoor air samples and one ambient air sample for VOC analysis via United States Environmental Protection Agency (USEPA) Method TO-15. TCE was not detected in two indoor air samples (IA01 and IA03). TCE was detected at concentrations ranging from 0.14 to 0.474 µg/m^3 (below the NYSDOH AGV of 2 µg/m^3) in the other two samples (IA02 and IA04).

On March 20, 2025, 9 days after completion of void space communication extensions, Langan performed an indoor air sampling event. Langan collected four indoor air samples and one ambient air sample for VOC analysis via USEPA Method TO-15. TCE was not detected in any indoor air samples.

Sample locations are shown on Figure 3. Indoor air and ambient air sample analytical results are shown in Table 1. Previous sample results are also shown in the tables as reference.

NYSDEC and the tenant were notified of indoor air sample results. NYSDEC and tenant notifications are included in Attachment B. Indoor air sampling logs, NYSDOH Indoor Air Quality Questionnaire and Building Inventory forms and sample analytical laboratory reports for the November, January, and March sampling events are included as Attachment D, E, and F, respectively. Category B laboratory reports were forwarded to Langan's data validator for the collected samples. The Data Usability Summary Reports (DUSR) for the for the November, January, and March sampling events are included as Attachment J.

ISMP Modifications

The ISMP will be revised to include the ERVs as an Engineering Control. The ISMP will detail continuous operation, monitoring and routine inspection of the ERVs.

CERTIFICATIONS

I, Jason Hayes, certify that I am currently a New York State (NYS) registered professional engineer and that this Corrective Measures Work Plan No. 2 was prepared in accordance with all applicable statutes and regulations and in substantial conformance with the DER Technical Guidance for Site Investigation and Remediation (DER-10).

I certify that all information and statements in this certification are true. I understand that a false statement made herein is punishable as a Class "A" misdemeanor, pursuant to Section 210.45 of the Penal Law.



089491
NYS Professional Engineer #

8/26/2025
Date

Signature

It is a violation of Article 145 of New York State Education Law for any person to alter this document in any way without the express written verification of adoption by any New York State licensed engineer in accordance with Section 7209(2), Article 145, New York State Education Law.

CLOSURE

Please contact the undersigned at 212-479-5451 with any questions.

Sincerely,
Langan Engineering, Environmental, Surveying, Landscape Architecture and Geology, D.P.C.

Paul McMahon, PE
Associate

Jason Hayes, PE
Senior Principal

Enclosure(s): Figure 1 – Site Location Map
Figure 2 – Site Plan
Figure 3 – Indoor Air Sample Location Map
Figure 4 – Floor Drain Sampling Map
Figure 5 – Void Space Communication Extension Plan

Table 1 – Indoor and Ambient Air Sample Results

Attachment A – SVI Mitigation System Record Drawings
Attachment B – NYSDEC and Tenant Correspondence
Attachment C – SVI Mitigation System Inspection Forms
Attachment D – Indoor Air Sampling Logs
Attachment E – NYSDOH Indoor Air Quality Questionnaire and Building Inventory
Attachment F – Analytical Laboratory Reports
Attachment G – PID Screening Results
Attachment H – Vapor Drain Product and Installation Sheet
Attachment I – As-Built HVAC Modifications
Attachment J – Data Usability Summary Reports

FIGURES



NOTES:

1. BASEMAP ADAPTED FROM UNITED STATES GEOLOGICAL SURVEY (USGS) 7.5-MINUTE SERIES TOPOGRAPHICAL MAPS, JERSEY CITY, NJ AND BROOKLYN, NY QUADRANGLES, DATED 2016.

1000 0 500 1000

SCALE: 1 INCH = 1000 FEET

LANGAN
Langan Engineering, Environmental, Surveying, Landscape Architecture and Geology, D.P.C.
368 Ninth Avenue, 8th Floor
New York, NY 10001
T: 212.479.5400 F: 212.479.5444 www.langan.com

Project	514 UNION STREET BLOCK No. 440, LOTS No. 9 and 12 BROOKLYN KINGS NEW YORK
Figure Title	SITE LOCATION MAP
Project No.	17036107
Date	09/13/2023
Drawn By	AJ
Checked By	VDP
Figure No.	1
Sheet	1 of 5

© 2019 Langan

Filename: \\langan.com\data\NY\data3\170361301\Cadd Data - 170361301\SheetFiles\Environmental\514 Union Street\Corrective Measures Work Plan\Figure 1 - Site Location Map.dwg Date: 3/26/2025 Time: 15:09 User: cdevin Style Table: Langan.stb Layout: ANSIA-BP

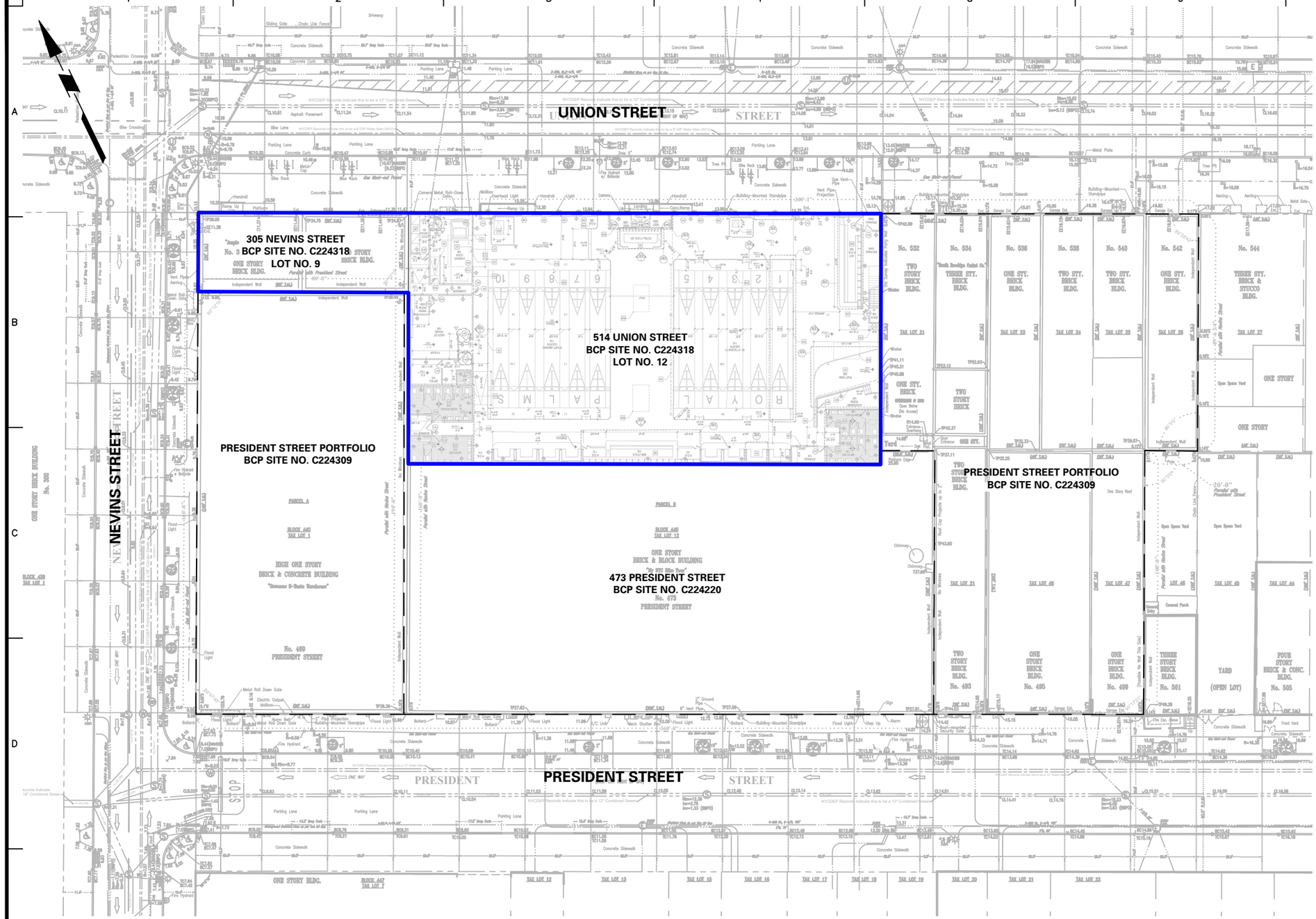
UNION STREET
305 NEVINS STREET
BCP SITE NO. C224318
LOT NO. 9
514 UNION STREET
BCP SITE NO. C224318
LOT NO. 12
PRESIDENT STREET PORTFOLIO
BCP SITE NO. C224309
PRESIDENT STREET PORTFOLIO
BCP SITE NO. C224309
473 PRESIDENT STREET
BCP SITE NO. C224220
No. 473
PRESIDENT STREET
NEVINS STREET
PRESIDENT STREET
No. 532
No. 534
No. 536
No. 538
No. 540
No. 542
No. 544
No. 469
PRESIDENT STREET
No. 493
No. 495
No. 499
No. 501
No. 505
YARD
(OPEN LOT)
ONE STORY BRICK BUILDING
No. 300
BLOCK 439
TAX LOT 1
BLOCK 440
TAX LOT 1
BLOCK 440
TAX LOT 12
BLOCK 447
TAX LOT 7
TAX LOT 12
TAX LOT 13
TAX LOT 15
TAX LOT 16
TAX LOT 17
TAX LOT 18
TAX LOT 19
TAX LOT 20
TAX LOT 21
TAX LOT 22
TAX LOT 51
TAX LOT 53
TAX LOT 54
TAX LOT 56
TAX LOT 58
TAX LOT 27
TAX LOT 21
TAX LOT 48
TAX LOT 47
TAX LOT 45
TAX LOT 44
HIGH ONE STORY BRICK & CONCRETE BUILDING
"Terrance S-Nuts Terrabrum"
ONE STORY BRICK & BLOCK BUILDING
"By NYC Bike Tour"
TWO STORY BRICK BLDG.
THREE STY. BRICK BLDG.
ONE STY. BRICK BLDG.
TWO STORY BRICK BLDG.
ONE STY. BRICK BLDG.
THREE STY. BRICK & STUCCO BLDG.
ONE STORY
ONE STORY
TWO STORY BRICK BLDG.
ONE STORY BRICK BLDG.
ONE STORY BRICK BLDG.
THREE STORY BRICK BLDG.
YARD
(OPEN LOT)
FOUR STORY BRICK & CONC. BLDG.
ONE STORY BLDG.
Front Yard
Open Space Yard
Covered Porch
Awning
Metal Gate
Chain Link Fence
Sliding Gate
Driveway
Concrete Sidewalk
Asphalt Pavement
Bike Lane
Parking Lane
Concrete Curb
Pedestrian Crossing
Bike Crossing
Flood Light
Bollard
Fire Hydrant
Metal Roll Down Gate
Electric Outlet
Mailbox
Handrail
Ramp Up
Platform
Overhead Light
Camera
Vent Pipe
Gas Vent-Pipe
Building-Mounted Standpipe
Fire Escape
Awning
Sign
Step Up
Alarm
Security Gate
Roof-mounted
Tree Pit
Tree
Metal Plate
Drop Curb
Gooseneck
Chimney
Roof Cap Projects up to 2'
Independent Wall
Parallel with Nevins Street
Parallel with President Street
Parallel with Union Street
ONE WAY
STOP
PRESIDENT STREET
UNION STREET
NEVINS STREET
PARCEL A
PARCEL B
Ground Floor Projection
Ground Floor Projection
Ground Floor Projection

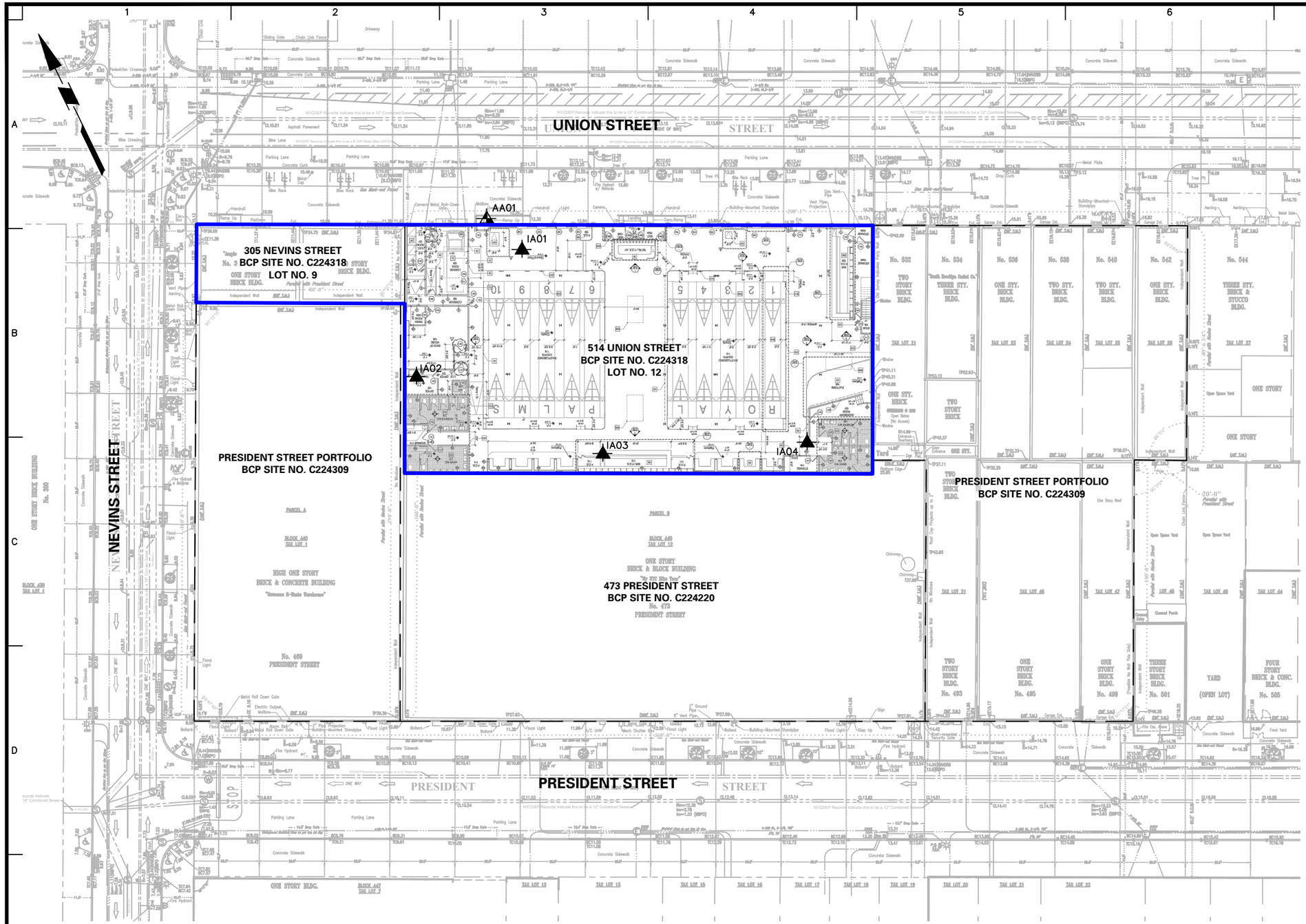
UNION STREET
NEVINS STREET
PRESIDENT STREET
305 NEVINS STREET
BCP SITE NO. C224318
LOT NO. 9
514 UNION STREET
BCP SITE NO. C224318
LOT NO. 12
PRESIDENT STREET PORTFOLIO
BCP SITE NO. C224309
473 PRESIDENT STREET
BCP SITE NO. C224220
No. 473
PRESIDENT STREET
AA01
IA01
IA02
IA03
IA04
No. 532
No. 534
No. 536
No. 538
No. 540
No. 542
No. 544
No. 469
PRESIDENT STREET
No. 493
No. 495
No. 499
No. 501
No. 505
YARD
(OPEN LOT)
BLOCK 439
TAX LOT 1
BLOCK 440
TAX LOT 1
BLOCK 440
TAX LOT 12
BLOCK 447
TAX LOT 7
HIGH ONE STORY
BRICK & CONCRETE BUILDING
ONE STORY
BRICK & BLOCK BUILDING
ONE STORY BRICK BUILDING
No. 300
ONE STORY BLDG.
PARCEL A
PARCEL B
Driveway
Sliding Gate
Chain Link Fence
Concrete Sidewalk
Asphalt Pavement
Bike Lane
Parking Lane
Concrete Curb
Bike Rack
Flood Light
Bollard
Fire Hydrant
Metal Roll Down Gate
Electric Outlet
Mailbox
Handrail
Ramp Up
Platform
Camera
Metal Plate
Building-Mounted Standpipe
Fire Escape
Awning
Chain Link Fence
Independent Wall
Open Space Yard
Covered Porch
Front Yard
Roof Drain
Vent Pipe
Gas Vent-Pipe
Sign
Step Up
Alarm
A/C Unit
Tree Pit
Tree 5"
Tree 6"
Tree 8"
Tree 10"
Tree 12"
Tree 14"
Tree 16"
Tree 18"
Tree 20"
Tree 24"
Tree 30"
Tree 36"
Tree 40"
Tree 42"
Tree 48"
Tree 50"
Tree 54"
Tree 60"
Tree 72"
Tree 84"
Tree 96"
Tree 108"
Tree 120"
Tree 132"
Tree 144"
Tree 156"
Tree 168"
Tree 180"
Tree 192"
Tree 204"
Tree 216"
Tree 228"
Tree 240"
Tree 252"
Tree 264"
Tree 276"
Tree 288"
Tree

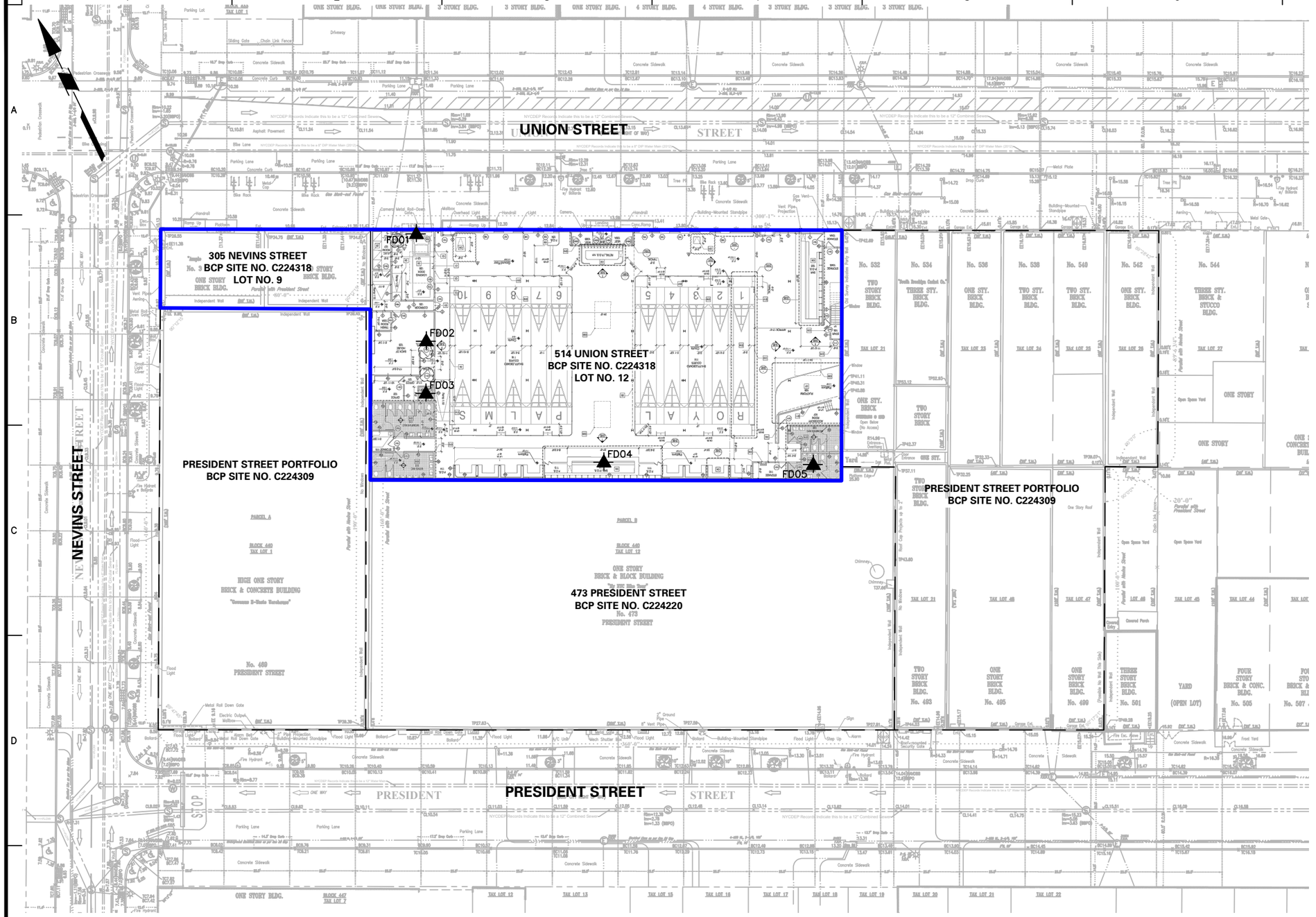

LEGEND:

- SITE BOUNDARY
- ADJOINING BCP SITE BOUNDARY
- FD01 FLOOR DRAIN AIR SAMPLE LOCATION

NOTES:

1. BASE MAP ADAPTED FROM DRAWING NO. A-001.00, TITLED "PROPOSED GROUND FLOOR PLAN" BY ANDRE TCHELISTCHEFF ARCHITECTS, DATED 13 AUGUST 2013 AND SURVEY BY NEW YORK CITY LAND SURVEYORS, PC, DATED 14 JUNE 2019.
2. ELEVATIONS HEREIN ARE IN FEET AND REFERENCED TO THE NORTH AMERICAN VERTICAL DATUM OF 1988 (NAVD88).

40 0 20 40

SCALE: 1 INCH = 40 FEET

LANGAN
Langan Engineering, Environmental, Surveying, Landscape Architecture and Geology, D.P.C.
368 Ninth Avenue, 8th Floor
New York, NY 10001
T: 212.479.5400 F: 212.479.5444 www.langan.com

Project	514 UNION STREET BLOCK No. 440, LOTS No. 9 and 12 BROOKLYN KINGS NEW YORK
Figure Title	PROPOSED FLOOR DRAIN AND INDOOR AIR SAMPLE LOCATION PLAN
Project No.	170361307
Date	12/17/2024
Drawn By	BK
Checked By	VDP
Figure No.	4
Sheet	4 of 5

© 2021 Langan

Filename: \\langan.com\data\NY\data3\170361301\Cadd Data - 170361301\SheetFiles\Environmental\514 Union Street\Corrective Measures Work Plan\Figure 4 - Proposed Floor Drain and Indoor Air Sample Location Plan-12.2024.dwg Date: 7/29/2025 Time: 14:40
User: afitzgerald Style Table: Langan.stb Layout: ANSIB-BL

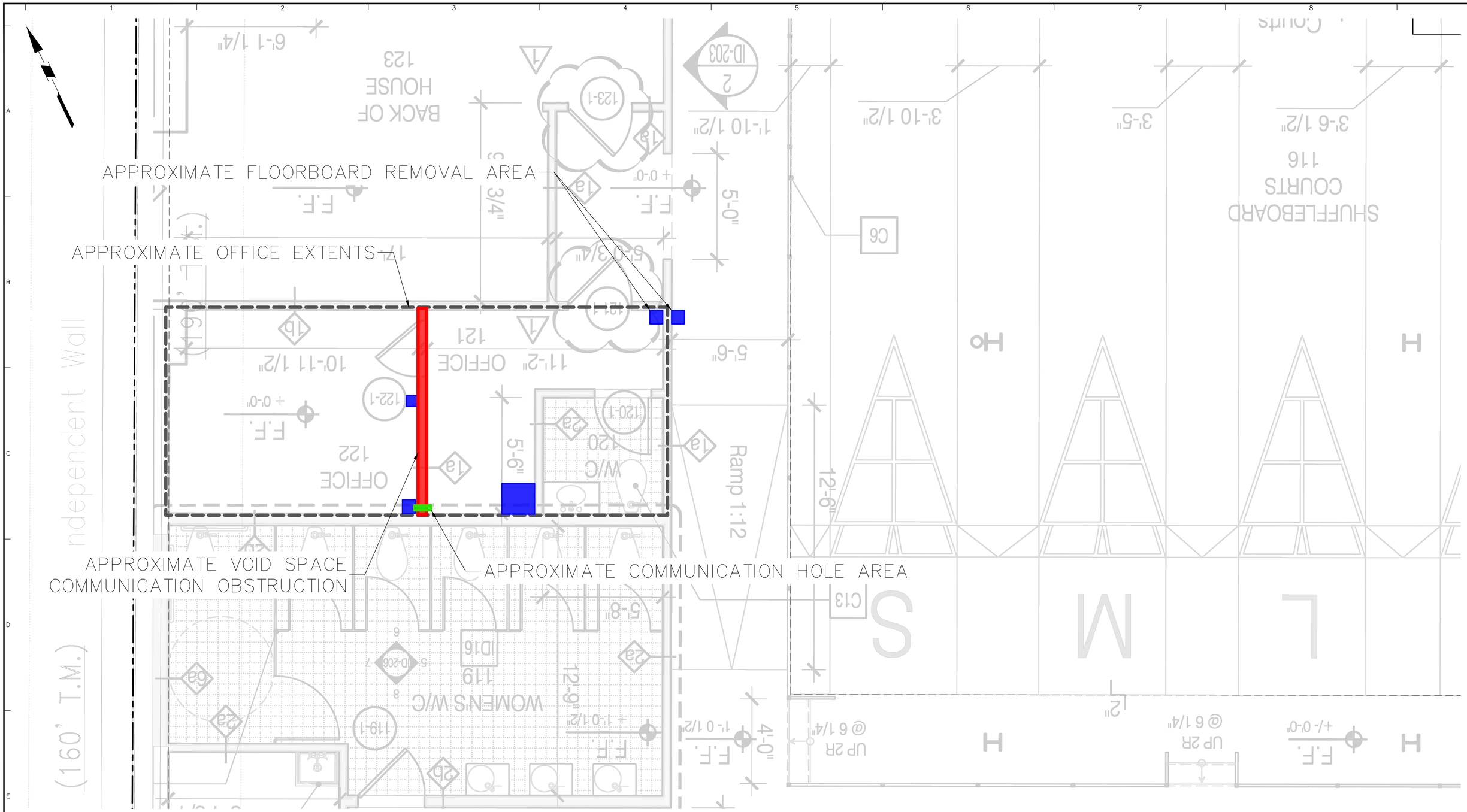

GENERAL NOTES:

1. BASE MAP ADAPTED FROM DRAWING NO. A-001.00, TITLED "PROPOSED GROUND FLOOR PLAN" BY ANDRE TCHELISTCHEFF ARCHITECTS, DATED 13 AUGUST 2013 AND SURVEY BY NEW YORK CITY LAND SURVEYORS, PC, DATED 14 JUNE 2019.
2. DRAWING SHALL NOT BE USED FOR STRUCTURAL, ARCHITECTURAL, UTILITY, OR OTHER REFERENCE EXCEPT FOR THE SOIL VAPOR INTRUSION (SVI) MITIGATION SYSTEM.
3. VAULTS, HATCHES, CRACKS, VOIDS, AND PENETRATIONS IDENTIFIED BY THE ENGINEER ON THE GROUND FLOOR WERE SEALED WITH POLYURETHANE-BASED CAULKING, CEMENT, OR FOAM AND RUBBER WEATHER PROOFING STRIPS.

LEGEND:

- APPROXIMATE COMMUNICATION HOLE AREA
- APPROXIMATE VOID SPACE COMMUNICATION OBSTRUCTION
- APPROXIMATE FLOORBOARD REMOVAL AREA
- APPROXIMATE OFFICE EXTENTS

SCALE: 1 INCH = 2 INCHES

LANGAN
Langan Engineering, Environmental, Surveying, Landscape Architecture and Geology, D.P.C.
368 Ninth Avenue, 8th Floor
New York, NY 10001
T: 212.479.5400 F: 212.479.5444 www.langan.com

Project	514 UNION STREET BLOCK No. 440, LOTS No. 9 AND 12 BROOKLYN KINGS NEW YORK
Drawing Title	VOID SPACE COMMUNICATION EXTENSION PLAN
Project No.	170361307
Date	06/12/2025
Drawn By	VK
Checked By	BK
Drawing No.	5
	Sheet 5 of 5

PROJECT NO. 170361307

Filename: \\langan.com\data\NYC\data3\170361301\Cadd Data - 170361301\Sheet Files\Environmental\514 Union Street\Corrective Measures Work Plan\Figure 5 - Void Space Communication Extension Plan.dwg Date: 7/30/2025 Time: 14:47 User: cdevin Style Table: Langan.stb Layout: Figure 5

TABLES

Table 1
Indoor Air Sampling
Indoor and Ambient Air Sampling Results

514 Union Street
Brooklyn, New York
NYSDEC BCP Site No.: C224318
Langan Project No.: 170361307

Analyte	CAS Number	NYSDOH AGVs	Location	AA01	AA01	AA01	AA01	AA01	AA01	AA01	AA01	AA01	AA01	AA01	AA01
			Sample Name	AA01_071420	AA01_031921	AA01_112022	AA01_031723	AA01_122623	AA01_011224	AA01_020224	AA01_030424	AA01_051624	AA01_112624	AA01_012825	AA01_032025
			Sample Date	07/14/2020	03/19/2021	11/21/2022	03/17/2023	12/26/2023	01/12/2024	02/02/2024	03/04/2024	05/16/2024	11/26/2024	01/28/2025	03/20/2025
			Sample Type	AA	AA	AA	AA	AA	AA	AA	AA	AA	AA	AA	AA
			Unit	Result	Result	Result	Result	Result	Result	Result	Result	Result	Result	Result	Result
Volatile Organic Compounds															
1,1,1,2-Tetrachloroethane	630-20-6	NS	ug/m3	<0.74 U	<0.56 U	NA	NA	NA	<0.601 U	<0.533 U	<1.06 UJ	NA	<0.677 U	<0.557 U	<0.57 U
1,1,1-Trichloroethane	71-55-6	NS	ug/m3	<0.59 U	<0.44 U	<0.109 U	<0.5 U	<0.505 U	<0.477 U	<0.423 U	<0.844 UJ	<0.489 U	<0.538 U	<0.443 U	<0.46 U
1,1,2,2-Tetrachloroethane	79-34-5	NS	ug/m3	<0.74 U	<0.56 U	NA	NA	NA	<0.601 U	<0.533 U	<1.06 UJ	NA	<0.677 U	<0.557 U	<0.57 U
1,1,2-Trichloro-1,2,2-Trifluoroethane	76-13-1	NS	ug/m3	<0.82 U	<0.62 U	NA	NA	NA	<0.671 U	<0.595 U	<1.19 UJ	NA	0.756 D	<0.622 U	<0.64 U
1,1,2-Trichloroethane	79-00-5	NS	ug/m3	<0.59 U	<0.44 U	NA	NA	NA	<0.477 U	<0.423 U	<0.844 UJ	NA	<0.538 U	<0.443 U	<0.46 U
1,1-Dichloroethane	75-34-3	NS	ug/m3	<0.43 U	<0.33 U	<0.081 U	<0.371 U	<0.374 U	<0.354 U	<0.314 U	<0.626 UJ	<0.363 U	<0.399 U	<0.328 U	<0.34 U
1,1-Dichloroethene	75-35-4	NS	ug/m3	<0.11 U	<0.08 U	<0.079 U	<0.182 U	<0.183 U	<0.173 U	<0.154 U	<0.307 UJ	<0.178 U	<0.195 U	<0.161 U	<0.083 U
1,2,4-Trichlorobenzene	120-82-1	NS	ug/m3	<0.8 U	<0.6 U	NA	NA	NA	<0.649 UJ	<0.576 U	<1.15 UJ	NA	<0.732 U	<0.602 U	<0.62 U
1,2,4-Trimethylbenzene	95-63-6	NS	ug/m3	0.53 D	0.56 D	NA	NA	NA	0.645 D	0.687 D	1.14 J	NA	0.824 D	0.518 D	2.6 D
1,2-Dibromoethane (Ethylene Dibromide)	106-93-4	NS	ug/m3	<0.83 U	<0.62 U	NA	NA	NA	<0.672 U	<0.596 U	<1.19 UJ	NA	<0.758 U	<0.623 U	<0.64 U
1,2-Dichlorobenzene	95-50-1	NS	ug/m3	<0.65 U	<0.49 U	NA	NA	NA	<0.526 U	<0.467 U	<0.93 UJ	NA	<0.593 U	<0.488 U	<0.5 U
1,2-Dichloroethane	107-06-2	NS	ug/m3	<0.43 U	<0.33 U	<0.081 U	<0.371 U	<0.374 U	<0.354 U	<0.314 U	<0.626 UJ	<0.363 U	<0.399 U	<0.328 U	<0.34 U
1,2-Dichloropropane	78-87-5	NS	ug/m3	<0.5 U	<0.37 U	NA	NA	NA	<0.404 U	<0.359 U	<0.715 UJ	NA	<0.456 U	<0.375 U	<0.39 U
1,2-Dichlorotetrafluoroethane	76-14-2	NS	ug/m3	<0.75 U	<0.57 U	NA	NA	NA	<0.612 U	<0.542 U	<1.08 UJ	NA	<0.689 U	<0.567 U	<0.59 U
1,3,5-Trimethylbenzene (Mesitylene)	108-67-8	NS	ug/m3	<0.53 U	<0.4 U	NA	NA	NA	<0.43 U	<0.381 U	<0.761 UJ	NA	<0.485 U	<0.399 U	0.66 D
1,3-Butadiene	106-99-0	NS	ug/m3	<0.71 U	<0.54 U	NA	NA	NA	<0.581 UJ	<0.515 U	<1.03 UJ	NA	<0.654 U	<0.538 U	<0.56 U
1,3-Dichlorobenzene	541-73-1	NS	ug/m3	<0.65 U	<0.49 U	NA	NA	NA	<0.526 U	<0.467 U	<0.93 UJ	NA	<0.593 U	<0.488 U	<0.5 U
1,3-Dichloropropane	142-28-9	NS	ug/m3	<0.5 U	<0.37 U	NA	NA	NA	<0.404 U	<0.359 U	<0.715 UJ	NA	<0.456 U	<0.375 U	<0.39 U
1,4-Dichlorobenzene	106-46-7	NS	ug/m3	<0.65 U	<0.49 U	NA	NA	NA	<0.526 U	<0.467 U	<0.93 UJ	NA	0.771 D	<0.488 U	<0.5 U
1,4-Dioxane (P-Dioxane)	123-91-1	NS	ug/m3	<0.77 U	<0.58 U	NA	NA	NA	<0.631 U	<0.559 U	<1.11 UJ	NA	<0.711 U	<0.584 U	<0.6 U
2,2,4-Trimethylpentane	540-84-1	NS	ug/m3	NA	NA	NA	NA	NA	NA	NA	NA	NA	NA	1.14 D	0.27 D
2-Hexanone (MBK)	591-78-6	NS	ug/m3	<0.88 U	<0.66 U	NA	NA	NA	<0.717 U	<0.636 U	<1.27 UJ	NA	<0.808 U	<0.664 U	<0.69 U
4-Ethyltoluene	622-96-8	NS	ug/m3	<0.53 U	0.56 D	NA	NA	NA	0.688 D	0.496 D	<0.761 UJ	NA	0.679 D	0.439 D	1.4 D
Acetone	67-64-1	NS	ug/m3	7.8 D	3.9 D	NA	NA	NA	5.74 D	9.01 D	24.3 J	NA	20.4 D	3.62 D	36 D
Acrylonitrile	107-13-1	NS	ug/m3	<0.23 U	<0.18 U	NA	NA	NA	0.19 D	<0.337 U	<0.336 UJ	NA	<2.78 U	<2.29 U	<2.4 U
Allyl Chloride (3-Chloropropene)	107-05-1	NS	ug/m3	<1.7 U	<1.3 U	NA	NA	NA	<1.37 U	<1.21 U	<2.42 UJ	NA	<1.54 U	<1.27 U	<1.3 U
Benzene	71-43-2	NS	ug/m3	0.45 D	0.59 D	NA	NA	NA	1.93 D	0.917 D	2.52 J	NA	1.35 D	0.985 D	0.43 D
Benzyl Chloride	100-44-7	NS	ug/m3	<0.56 U	<0.42 U	NA	NA	NA	<0.453 U	<0.402 U	<0.801 UJ	NA	<0.51 U	<0.42 U	<0.43 U
Bromodichloromethane	75-27-4	NS	ug/m3	<0.72 U	<0.54 U	NA	NA	NA	<0.586 U	<0.52 U	<1.04 UJ	NA	<0.661 U	<0.543 U	<0.56 U
Bromoethene	593-60-2	NS	ug/m3	<0.47 U	<0.35 U	NA	NA	NA	<0.383 U	<0.339 U	<0.677 UJ	NA	<0.431 U	<0.355 U	<0.37 U
Bromoform	75-25-2	NS	ug/m3	<1.1 U	<0.84 U	NA	NA	NA	<0.904 U	<0.802 U	<1.6 UJ	NA	<1.02 U	<0.838 U	<0.87 U
Bromomethane	74-83-9	NS	ug/m3	<0.42 U	<0.31 U	NA	NA	NA	<0.34 U	<0.301 U	<0.601 UJ	NA	<0.383 U	<0.315 U	<0.33 U
Carbon Disulfide	75-15-0	NS	ug/m3	<0.33 U	<0.25 U	NA	NA	NA	<0.272 U	<0.242 U	<0.482 UJ	NA	<0.307 U	<0.253 U	<0.26 U
Carbon Tetrachloride	56-23-5	NS	ug/m3	0.47 D	0.41 D	NA	NA	NA	0.385 D	0.342 D	0.584 J	NA	0.496 D	0.306 D	0.37 D
Chlorobenzene	108-90-7	NS	ug/m3	<0.49 U	<0.37 U	NA	NA	NA	<0.403 U	<0.357 U	<0.712 UJ	NA	<0.454 U	<0.373 U	<0.39 U
Chloroethane	75-00-3	NS	ug/m3	<0.28 U	<0.21 U	NA	NA	NA	<0.231 U	<0.205 U	<0.408 UJ	NA	<0.26 U	<0.214 U	<0.22 U
Chloroform	67-66-3	NS	ug/m3	<0.52 U	<0.4 U	NA	NA	NA	<0.427 U	<0.379 U	<0.755 UJ	NA	<0.481 U	<0.396 U	<0.41 U
Chloromethane	74-87-3	NS	ug/m3	1.3 D	1.1 D	NA	NA	NA	0.922 J	1.76 J	1.5 J	NA	1.65 D	1.36 D	1.2 D
Cis-1,2-Dichloroethene	156-59-2	NS	ug/m3	<0.11 U	<0.08 U	<0.079 U	<0.182 U	<0.183 U	<0.173 U	0.185 D	<0.307 UJ	<0.178 U	<0.195 U	<0.161 U	<0.083 U
Cis-1,3-Dichloropropene	10061-01-5	NS	ug/m3	<0.49 U	<0.37 U	NA	NA	NA	<0.397 U	<0.352 U	<0.702 UJ	NA	<0.448 U	<0.368 U	<0.38 U
Cyclohexane	110-82-7	NS	ug/m3	0.85 D	<0.28 U	NA	NA	NA	0.753 D	0.347 D	<0.532 UJ	NA	0.543 D	<0.279 U	<0.29 U
Dibromochloromethane	124-48-1	NS	ug/m3	<0.91 U	<0.69 U	NA	NA	NA	<0.745 U	<0.661 U	<1.32 UJ	NA	<0.84 U	<0.691 U	<0.71 U
Dichlorodifluoromethane	75-71-8	NS	ug/m3	1.7 D	2.1 D	NA	NA	NA	2.16 D	2.65 D	2.6 J	NA	3.22 D	2.13 D	1.9 D
Ethyl Acetate	141-78-6	NS	ug/m3	<0.77 U	4.5 D	NA	NA	NA	<0.631 U	<0.559 U	<1.11 UJ	NA	2.24 J	<0.584 U	3.8 D
Ethylbenzene	100-41-4	NS	ug/m3	<0.47 U	1.1 D	NA	NA	NA	0.798 D	0.438 D	1.28 J	NA	1.5 D	0.704 D	0.44 D
Hexachlorobutadiene	87-68-3	NS	ug/m3	<1.1 U	<0.86 U	NA	NA	NA	<0.933 UJ	<0.828 U	<1.65 UJ	NA	<1.05 U	<0.865 U	<0.89 U
Isopropanol	67-63-0	NS	ug/m3	<0.53 U	3.7 D	NA	NA	NA	2.34 J	2.46 J	11.8 J	NA	17.9 D	<1.2 U	7.8 J
M,P-Xylene	179601-23-1	NS	ug/m3	<0.93 U	3.7 D	NA	NA	NA	2.7 D	1.52 D	2.02 J	NA	5.39 D	1.66 D	1.8 D
Methyl Ethyl Ketone (2-Butanone)	78-93-3	NS	ug/m3	1.1 D	0.48 D	NA	NA	NA	1.08 D	1.19 D	0.867 J	NA	1.74 D	0.598 D	0.57 D
Methyl Isobutyl Ketone (4-Methyl-2-Pentanone)	108-10-1	NS	ug/m3	<0.44 U	<0.33 U	NA	NA	NA	<0.358 U	<0.318 U	<0.634 UJ	NA	<0.404 U	<0.332 U	0.65 D
Methyl Methacrylate	80-62-6	NS	ug/m3	<0.44 U	<0.33 U	NA	NA	NA	<0.358 U	1.33 D	<0.633 UJ	NA	0.969 D	0.432 D	<0.34 U
Methylene Chloride	75-09-2	60	ug/m3	<0.75 U	0.65 D	<1.74 U	1.15 D	0.739 D	<0.608 U	0.566 D	<1.07 UJ	<0.622 U	2.19 D	<1.69 U	<1.7 U
Naphthalene	91-20-3	NS	ug/m3	NA	NA	NA	NA	NA	NA	NA	NA	NA	NA	<0.85 U	<0.88 U
n-Heptane	142-82-5	NS	ug/m3	<0.44 U	<0.33 U	NA	NA	NA	1.43 D	0.763 D	<0.634 UJ	NA	1.45 D	0.465 D	<0.34 U
n-Hexane	110-54-3	NS	ug/m3	0.76 D	0.48 D	NA	NA	NA	8.48 D	1.04 D	<0.545 UJ	NA	1.42 D	0.829 D	0.44 D
o-Xylene (1,2-Dimethylbenzene)	95-47-6	NS	ug/m3	<0.47 U	0.6 D	NA	NA	NA	0.912 D	0.505 D	0.873 J	NA	1.93 D	0.669 D	0.69 D
Propylene	115-07-1	NS	ug/m3	<0.18 U	<0.14 U	NA	NA	NA	<0.151 U	<0.134 U	<0.266 UJ	NA	1.99 D	1.41 D	<0.14 U
Styrene	100-42-5	NS	ug/m3	<0.46 U	<0.34 U	NA	NA	NA	<0.373 U	<0.331 U	<0.659 UJ	NA	<0.42 U	<0.345 U	<0.36 U
Tert-Butyl Methyl Ether	1634-04-4	NS	ug/m3	<0.39 U	<0.29 U	NA	NA	NA	<0.315 U	<0.28 U	<0.558 UJ	NA	<0.355 U	<0.292 U	<0.3 U
Tetrachloroethene (PCE)	127-18-4	30	ug/m3	<0.73 U	<0.55 U	<0.136 U	<0.621 U	0.878 D	<0.593 U	1.79 D	<1.05 UJ	<0.608 U	1.14 D	<0.55 U	<0.57 U
Tetrahydrofuran	109-99-9	NS	ug/m3	<0.63 U	<0.48 U	NA	NA	NA	<0.516 U	1.01 D	<0.913 UJ	NA	0.669 D	<0.478 U	<0.49 U
Toluene	108-88-3	NS	ug/m3	1.3 D	1 D	NA	NA	NA	5.77 D	2.72 D	3.03 J	NA	13.5 D	3.3 D	1.3 D
Trans-1,2-Dichloroethene	156-60-5	NS	ug/m3	<0.43 U	<0.32 U	<0.079 U	<0.363 U	<0.367 U	<0.347 U	<0.308 U	<0.613 UJ	<0.355 U	<0.391 U	<0.322 U	<0.33 U
Trans-1,3-Dichloropropene	10061-02-6	NS	ug/m3	<0.49 U	<0.37 U	NA	NA	NA	<0.397 U	<0.352 U	<0.702 UJ	NA	<0.448 U	<0.368 U	<0.38 U
Trichloroethene (TCE)	79-01-6	**2**	ug/m3	<0.14 U	<0.11 U	<0.107 U	<0.123 U	<0.124 U	<0.118 U	0.417 D	<0.208 UJ	<0.12 U	0.371 D	<0.109 U	<0.11 U
Trichlorofluoromethane	75-69-4	NS	ug/m3	1.2 D	1.1 D	NA	NA	NA	1.47 D	1.18 D	1.48 J	NA	1.72 D	1.14 D	0.99 D
Vinyl Acetate	108-05-4	NS	ug/m3	<0.38 U	<0.28 U	NA	NA	NA	<0.308 U	<0.273 U	<0.545 UJ	NA	<0.347 UJ	<0.286 UJ	<0.29 UJ
Vinyl Chloride	75-01-4	NS	ug/m3	<0.14 U	<0.1 U	<0.051 U	<0.117 U	<0.118 U	<0.112 UJ	<0.0992 U	<0.198 UJ	<0.115 U	<0.126 U	<0.104 U	<0.11 U

Table 1
Indoor Air Sampling
Indoor and Ambient Air Sampling Results

514 Union Street
Brooklyn, New York
NYSDEC BCP Site No.: C224318
Langan Project No.: 170361307

Analyte	CAS Number	NYSDOH AGVs	Location	IA01	IA01	IA01	IA01	IA01	IA01	IA01	IA01	IA01	IA01	IA01	IA01
			Sample Name	IA01_071420	IA01_031921	IA01_112022	IA01_031723	IA01_122623	IA01_011224	IA01_020224	IA01_030424	IA01_051624	IA01_112624	IA01_012825	IA01_032025
			Sample Date	07/14/2020	03/19/2021	11/21/2022	03/17/2023	12/26/2023	01/12/2024	02/02/2024	03/04/2024	05/16/2024	11/26/2024	01/28/2025	03/20/2025
			Sample Type	IA	IA	IA	IA	IA	IA	IA	IA	IA	IA	IA	IA
			Unit	Result	Result	Result	Result	Result	Result	Result	Result	Result	Result	Result	Result
Volatile Organic Compounds															
1,1,1,2-Tetrachloroethane	630-20-6	NS	ug/m3	<0.76 U	<0.56 U	NA	NA	NA	<0.583 U	<0.585 U	<0.631 U	NA	<0.625 U	<0.606 U	<0.6 U
1,1,1-Trichloroethane	71-55-6	NS	ug/m3	<0.6 U	<0.44 U	<0.109 U	<0.605 UJ	<0.504 U	<0.463 U	<0.465 U	<0.501 U	<0.526 U	<0.497 U	<0.482 U	<0.48 U
1,1,2,2-Tetrachloroethane	79-34-5	NS	ug/m3	<0.76 U	<0.56 U	NA	NA	NA	<0.583 U	<0.585 U	<0.631 U	NA	<0.625 U	<0.606 U	<0.6 U
1,1,2-Trichloro-1,2,2-Trifluoroethane	76-13-1	NS	ug/m3	0.93 D	<0.62 U	NA	NA	NA	<0.651 U	<0.653 U	<0.704 U	NA	<0.697 U	<0.677 U	<0.67 U
1,1,2-Trichloroethane	79-00-5	NS	ug/m3	<0.6 U	<0.44 U	NA	NA	NA	<0.463 U	<0.465 U	<0.501 U	NA	<0.497 U	<0.482 U	<0.48 U
1,1-Dichloroethane	75-34-3	NS	ug/m3	<0.45 U	<0.33 U	<0.081 U	<0.448 UJ	<0.374 U	<0.344 U	<0.345 U	<0.372 U	<0.39 U	<0.368 U	<0.357 U	<0.35 U
1,1-Dichloroethene	75-35-4	NS	ug/m3	<0.11 U	<0.081 U	<0.079 U	<0.22 UJ	<0.183 U	<0.168 U	<0.169 U	<0.182 U	<0.191 U	<0.18 U	<0.175 U	<0.086 U
1,2,4-Trichlorobenzene	120-82-1	NS	ug/m3	<0.82 U	<0.6 U	NA	NA	NA	<0.63 UJ	<0.632 U	<0.682 UJ	NA	<0.675 U	1.38 D	<0.65 U
1,2,4-Trimethylbenzene	95-63-6	NS	ug/m3	2.7 D	0.48 D	NA	NA	NA	0.626 D	0.754 D	<0.452 U	NA	0.447 D	<0.434 U	2.8 D
1,2-Dibromoethane (Ethylene Dibromide)	106-93-4	NS	ug/m3	<0.85 U	<0.63 U	NA	NA	NA	<0.652 U	<0.655 U	<0.706 U	NA	<0.699 U	<0.678 U	<0.67 U
1,2-Dichlorobenzene	95-50-1	NS	ug/m3	<0.66 U	<0.49 U	NA	NA	NA	<0.51 U	<0.512 U	<0.553 U	NA	<0.547 U	<0.531 U	<0.52 U
1,2-Dichloroethane	107-06-2	NS	ug/m3	0.89 D	<0.33 U	<0.081 U	<0.448 UJ	<0.374 U	<0.344 U	<0.345 U	<0.372 U	<0.39 U	<0.368 U	<0.357 U	<0.35 U
1,2-Dichloropropane	78-87-5	NS	ug/m3	<0.51 U	<0.38 U	NA	NA	NA	<0.392 U	<0.394 U	<0.425 U	NA	<0.42 U	<0.408 U	<0.4 U
1,2-Dichlorotetrafluoroethane	76-14-2	NS	ug/m3	<0.77 U	<0.57 U	NA	NA	NA	<0.594 U	<0.596 U	<0.642 U	NA	<0.636 U	<0.617 U	<0.61 U
1,3,5-Trimethylbenzene (Mesitylene)	108-67-8	NS	ug/m3	0.98 D	<0.4 U	NA	NA	NA	<0.417 U	<0.419 U	<0.452 U	NA	<0.447 U	<0.434 U	0.77 D
1,3-Butadiene	106-99-0	NS	ug/m3	<0.73 U	<0.54 U	NA	NA	NA	<0.563 UJ	<0.565 U	<0.61 U	NA	<0.604 U	<0.586 U	<0.58 U
1,3-Dichlorobenzene	541-73-1	NS	ug/m3	<0.66 U	<0.49 U	NA	NA	NA	<0.51 U	<0.512 U	<0.553 U	NA	<0.547 U	<0.531 U	<0.52 U
1,3-Dichloropropane	142-28-9	NS	ug/m3	<0.51 U	<0.38 U	NA	NA	NA	<0.392 U	<0.394 U	<0.425 U	NA	<0.421 U	<0.408 U	<0.4 U
1,4-Dichlorobenzene	106-46-7	NS	ug/m3	1.1 D	<0.49 U	NA	NA	NA	<0.51 U	<0.512 U	<0.553 U	NA	<0.547 U	<0.531 U	<0.52 U
1,4-Dioxane (P-Dioxane)	123-91-1	NS	ug/m3	<0.79 U	<0.59 U	NA	NA	NA	<0.612 U	<0.614 U	<0.662 U	NA	<0.656 U	<0.636 U	<0.63 U
2,2,4-Trimethylpentane	540-84-1	NS	ug/m3	NA	NA	NA	NA	NA	NA	NA	NA	NA	NA	0.413 D	0.33 D
2-Hexanone (MBK)	591-78-6	NS	ug/m3	<0.9 U	<0.67 U	NA	NA	NA	<0.696 U	<0.698 U	1.43 D	NA	<0.746 U	<0.723 U	<0.71 U
4-Ethyltoluene	622-96-8	NS	ug/m3	2.5 D	0.44 D	NA	NA	NA	0.584 D	0.545 D	<0.452 U	NA	<0.447 U	<0.434 U	1.6 D
Acetone	67-64-1	NS	ug/m3	100 D	4.8 D	NA	NA	NA	9.66 D	15.1 D	7.01 D	NA	14.5 D	4.24 D	39 D
Acrylonitrile	107-13-1	NS	ug/m3	<0.24 U	<0.18 U	NA	NA	NA	<0.184 U	<0.37 U	<0.199 U	NA	<2.57 U	<2.49 U	0.7 JD
Allyl Chloride (3-Chloropropene)	107-05-1	NS	ug/m3	<1.7 U	<1.3 U	NA	NA	NA	<1.33 U	<1.33 U	<1.44 U	NA	<1.42 U	<1.38 U	<1.4 U
Benzene	71-43-2	NS	ug/m3	1.1 D	0.52 D	NA	NA	NA	1.11 D	0.898 D	1.17 D	NA	0.669 D	0.621 D	0.5 D
Benzyl Chloride	100-44-7	NS	ug/m3	<0.57 U	<0.42 U	NA	NA	NA	<0.44 U	<0.441 U	<0.476 U	NA	<0.471 U	<0.457 U	<0.45 U
Bromodichloromethane	75-27-4	NS	ug/m3	<0.74 U	<0.55 U	NA	NA	NA	<0.569 U	<0.571 U	<0.616 U	NA	<0.61 U	<0.592 U	<0.58 U
Bromoethene	593-60-2	NS	ug/m3	<0.48 U	<0.36 U	NA	NA	NA	<0.371 U	<0.373 U	<0.402 U	NA	<0.398 U	<0.386 U	<0.38 U
Bromoform	75-25-2	NS	ug/m3	<1.1 U	<0.84 U	NA	NA	NA	<0.878 U	<0.881 U	<0.95 U	NA	<0.941 U	<0.913 U	<0.9 U
Bromomethane	74-83-9	NS	ug/m3	<0.43 U	<0.32 U	NA	NA	NA	<0.33 U	<0.331 U	<0.357 U	NA	<0.353 U	<0.343 U	<0.34 U
Carbon Disulfide	75-15-0	NS	ug/m3	2.1 D	<0.25 U	NA	NA	NA	<0.264 U	<0.265 U	<0.286 U	NA	<0.283 U	<0.275 U	<0.27 U
Carbon Tetrachloride	56-23-5	NS	ug/m3	0.83 D	0.36 D	NA	NA	NA	0.374 D	0.429 D	0.289 D	NA	0.401 D	0.333 D	0.44 D
Chlorobenzene	108-90-7	NS	ug/m3	<0.51 U	<0.38 U	NA	NA	NA	<0.391 U	<0.392 U	<0.423 U	NA	<0.419 U	<0.407 U	<0.4 U
Chloroethane	75-00-3	NS	ug/m3	<0.29 U	<0.22 U	NA	NA	NA	<0.224 U	<0.225 U	<0.242 U	NA	<0.24 U	<0.233 U	<0.23 U
Chloroform	67-66-3	NS	ug/m3	0.7 D	<0.4 U	NA	NA	NA	0.539 D	<0.416 U	<0.449 U	NA	<0.444 U	<0.431 U	<0.43 U
Chloromethane	74-87-3	NS	ug/m3	3 D	1.4 D	NA	NA	NA	0.894 J	1.94 J	1.21 D	NA	1.26 D	1.29 D	1.2 D
Cis-1,2-Dichloroethene	156-59-2	NS	ug/m3	<0.11 U	<0.081 U	<0.079 U	<0.22 UJ	<0.183 U	<0.168 U	<0.169 U	<0.182 U	<0.191 U	<0.18 U	<0.175 U	<0.086 U
Cis-1,3-Dichloropropene	10061-01-5	NS	ug/m3	<0.5 U	<0.37 U	NA	NA	NA	<0.385 U	<0.387 U	<0.417 U	NA	<0.413 U	<0.401 U	<0.4 U
Cyclohexane	110-82-7	NS	ug/m3	0.83 D	<0.28 U	NA	NA	NA	0.497 D	0.587 D	<0.316 U	NA	<0.313 U	<0.304 U	<0.3 U
Dibromochloromethane	124-48-1	NS	ug/m3	<0.94 U	<0.69 U	NA	NA	NA	<0.723 U	<0.726 U	<0.783 U	NA	<0.775 U	<0.752 U	<0.74 U
Dichlorodifluoromethane	75-71-8	NS	ug/m3	2.7 D	1.9 D	NA	NA	NA	1.93 D	2.57 D	1.86 D	NA	2.48 D	2.18 D	2.2 D
Ethyl Acetate	141-78-6	NS	ug/m3	25 D	<0.59 U	NA	NA	NA	3.24 D	2.86 D	1.89 D	NA	1.02 J	2.8 D	10 D
Ethylbenzene	100-41-4	NS	ug/m3	3.3 D	<0.35 U	NA	NA	NA	0.627 D	0.555 D	0.718 D	NA	<0.395 U	0.383 D	0.49 D
Hexachlorobutadiene	87-68-3	NS	ug/m3	<1.2 U	<0.87 U	NA	NA	NA	<0.905 UJ	<0.909 U	<0.98 U	NA	<0.971 U	<0.942 U	<0.93 U
Isopropanol	67-63-0	NS	ug/m3	660 DE	4.1 D	NA	NA	NA	2.8 J	4.42 J	5.42 D	NA	3.15 D	1.37 D	3 J
M,P-Xylene	179601-23-1	NS	ug/m3	11 D	1 D	NA	NA	NA	2.21 D	1.96 D	1.08 D	NA	0.948 D	0.997 D	2 D
Methyl Ethyl Ketone (2-Butanone)	78-93-3	NS	ug/m3	7.2 D	1.3 D	NA	NA	NA	1.15 D	0.93 D	2.06 D	NA	1.05 D	1.15 D	1.1 D
Methyl Isobutyl Ketone (4-Methyl-2-Pentanone)	108-10-1	NS	ug/m3	6.3 D	<0.33 U	NA	NA	NA	<0.348 U	<0.349 U	<0.376 U	NA	<0.373 U	<0.362 U	0.86 D
Methyl Methacrylate	80-62-6	NS	ug/m3	0.95 D	3 D	NA	NA	NA	<0.348 U	<0.349 U	<0.376 U	NA	0.931 D	0.723 D	<0.36 U
Methylene Chloride	75-09-2	60	ug/m3	1.6 D	19 D	<1.74 U	1.19 J	0.705 D	<0.59 U	0.592 D	0.67 D	<0.67 U	<1.9 U	<1.84 U	<1.8 U
Naphthalene	91-20-3	NS	ug/m3	NA	NA	NA	NA	NA	NA	NA	NA	NA	NA	2.04 D	<0.91 U
n-Heptane	142-82-5	NS	ug/m3	1.9 D	<0.33 U	NA	NA	NA	0.87 D	0.698 D	<0.377 U	NA	<0.373 U	<0.362 U	<0.36 U
n-Hexane	110-54-3	NS	ug/m3	6.8 D	0.49 D	NA	NA	NA	1.71 D	0.781 D	0.324 D	NA	0.417 D	0.591 D	0.49 D
o-Xylene (1,2-Dimethylbenzene)	95-47-6	NS	ug/m3	3.1 D	0.39 D	NA	NA	NA	0.737 D	0.629 D	0.439 D	NA	<0.395 U	<0.383 U	0.83 D
Propylene	115-07-1	NS	ug/m3	<0.19 U	<0.14 U	NA	NA	NA	<0.146 U	<0.147 U	0.775 D	NA	0.971 D	1.03 D	<0.15 U
Styrene	100-42-5	NS	ug/m3	14 D	<0.35 U	NA	NA	NA	<0.362 U	<0.363 U	<0.391 U	NA	<0.388 U	<0.376 U	<0.37 U
Tert-Butyl Methyl Ether	1634-04-4	NS	ug/m3	<0.4 U	<0.29 U	NA	NA	NA	<0.306 U	<0.307 U	<0.331 U	NA	<0.328 U	<0.318 U	<0.31 U
Tetrachloroethene (PCE)	127-18-4	30	ug/m3	7 D	<0.55 U	<0.136 U	<0.751 UJ	1 D	<0.576 U	<0.578 U	<0.623 U	<0.654 U	<0.617 U	<0.599 U	<0.59 U
Tetrahydrofuran	109-99-9	NS	ug/m3	<0.65 U	<0.48 U	NA	NA	NA	<0.501 U	<0.503 U	<0.542 U	NA	<0.537 U	<0.521 U	<0.51 U
Toluene	108-88-3	NS	ug/m3	62 D	1.1 D	NA	NA	NA	10.4 D	2.44 D	1.52 D	NA	1.27 D	2.46 D	1.6 D
Trans-1,2-Dichloroethene	156-60-5	NS	ug/m3	<0.44 U	<0.32 U	<0.079 U	<0.439 UJ	<0.366 U	<0.337 U	<0.338 U	<0.364 U	<0.382 U	<0.361 U	<0.35 U	<0.35 U
Trans-1,3-Dichloropropene	10061-02-6	NS	ug/m3	<0.5 U	<0.37 U	NA	NA	NA	<0.385 U	<0.387 U	<0.417 U	NA	<0.413 U	<0.401 U	<0.4 U
Trichloroethene (TCE)	79-01-6	**2**	ug/m3	0.36 D	**18 D**	0.5	<0.149 UJ	**5.9 D**	**2.92 D**	**3.53 D**	<0.123 U	<0.13 U	**4.3 D**	<0.119 U	<0.12 U
Trichlorofluoromethane	75-69-4	NS	ug/m3	2.4 D	1.1 D	NA	NA	NA	1.43 D	1.29 D	0.981 D	NA	1.28 D	1.14 D	1.1 D
Vinyl Acetate	108-05-4	NS	ug/m3	<0.39 U	<0.29 U	NA	NA	NA	<0.299 U	<0.3 U	<0.324 U	NA	<0.32 UJ	<0.311 UJ	<0.31 UJ
Vinyl Chloride	75-01-4	NS	ug/m3	<0.14 U	<0.1 U	<0.051 U	<0.142 UJ	<0.118 U	<0.109 UJ	<0.109 U	<0.117 U	<0.123 U	<0.116 U	<0.113 U	<0.11 U

Table 1
Indoor Air Sampling
Indoor and Ambient Air Sampling Results

514 Union Street
Brooklyn, New York
NYSDEC BCP Site No.: C224318
Langan Project No.: 170361307

Analyte	CAS Number	NYSDOH AGVs	Location	IA02	IA02	IA02	IA02	IA02	IA02	IA02	IA02	IA02	IA02	IA02	IA02
			Sample Name	IA02_071420	IA02_031921	IA02_112022	IA02_031723	IA02_122623	IA02_011224	IA02_020224	IA02_030424	IA02_051624	IA02_112624	IA02_012825	IA02_032025
			Sample Date	07/14/2020	03/19/2021	11/21/2022	03/17/2023	12/26/2023	01/12/2024	02/02/2024	03/04/2024	05/16/2024	11/26/2024	01/28/2025	03/20/2025
			Sample Type	IA	IA	IA	IA	IA	IA	IA	IA	IA	IA	AI	IA
			Unit	Result	Result	Result	Result	Result	Result	Result	Result	Result	Result	Result	Result
Volatile Organic Compounds															
1,1,1,2-Tetrachloroethane	630-20-6	NS	ug/m3	<0.51 U	<0.6 U	NA	NA	NA	<0.66 U	<0.557 U	<0.626 U	NA	<0.61 U	<0.605 U	<0.6 U
1,1,1-Trichloroethane	71-55-6	NS	ug/m3	<0.41 U	<0.48 U	<0.109 UJ	<0.524 U	<0.497 U	<0.525 U	<0.443 U	<0.498 U	<0.587 U	<0.485 U	<0.481 U	<0.47 U
1,1,2,2-Tetrachloroethane	79-34-5	NS	ug/m3	<0.51 U	<0.6 U	NA	NA	NA	<0.66 U	<0.557 U	<0.626 U	NA	<0.61 U	<0.605 U	<0.6 U
1,1,2-Trichloro-1,2,2-Trifluoroethane	76-13-1	NS	ug/m3	<0.57 U	<0.67 U	NA	NA	NA	<0.737 U	<0.622 U	<0.699 U	NA	<0.681 U	<0.676 U	<0.67 U
1,1,2-Trichloroethane	79-00-5	NS	ug/m3	<0.41 U	<0.48 U	NA	NA	NA	<0.525 U	<0.443 U	<0.498 U	NA	<0.485 U	<0.481 U	<0.47 U
1,1-Dichloroethane	75-34-3	NS	ug/m3	<0.3 U	<0.35 U	<0.081 UJ	<0.389 U	<0.368 U	<0.389 U	<0.328 U	<0.369 U	<0.436 U	<0.36 U	<0.357 U	<0.35 U
1,1-Dichloroethene	75-35-4	NS	ug/m3	<0.074 U	<0.087 U	<0.079 UJ	<0.19 U	<0.18 U	<0.191 U	<0.161 U	<0.181 U	<0.213 U	<0.176 U	<0.175 U	<0.086 U
1,2,4-Trichlorobenzene	120-82-1	NS	ug/m3	<0.55 U	<0.65 U	NA	NA	NA	<0.714 UJ	<0.602 U	<0.677 UJ	NA	<0.66 UJ	<0.655 U	<0.64 U
1,2,4-Trimethylbenzene	95-63-6	NS	ug/m3	0.8 D	0.52 D	NA	NA	NA	0.567 D	1.12 D	<0.448 U	NA	<0.437 U	<0.434 U	2.4 D
1,2-Dibromoethane (Ethylene Dibromide)	106-93-4	NS	ug/m3	<0.57 U	<0.67 U	NA	NA	NA	<0.739 U	<0.623 U	<0.701 U	NA	<0.683 U	<0.678 U	<0.67 U
1,2-Dichlorobenzene	95-50-1	NS	ug/m3	<0.45 U	<0.53 U	NA	NA	NA	<0.578 U	<0.488 U	<0.548 U	NA	<0.534 U	<0.53 U	<0.52 U
1,2-Dichloroethane	107-06-2	NS	ug/m3	<0.3 U	<0.35 U	<0.081 UJ	<0.389 U	<0.368 U	<0.389 U	<0.328 U	<0.369 U	<0.435 U	<0.36 U	<0.357 U	<0.35 U
1,2-Dichloropropane	78-87-5	NS	ug/m3	<0.34 U	<0.4 U	NA	NA	NA	<0.445 U	<0.375 U	<0.421 U	NA	<0.411 U	<0.408 U	<0.4 U
1,2-Dichlorotetrafluoroethane	76-14-2	NS	ug/m3	<0.52 U	<0.61 U	NA	NA	NA	<0.672 U	<0.567 U	<0.638 U	NA	<0.621 U	<0.617 U	<0.61 U
1,3,5-Trimethylbenzene (Mesitylene)	108-67-8	NS	ug/m3	<0.37 U	<0.43 U	NA	NA	NA	<0.473 U	<0.399 U	<0.448 U	NA	<0.437 U	<0.434 U	0.68 D
1,3-Butadiene	106-99-0	NS	ug/m3	<0.49 U	<0.58 U	NA	NA	NA	<0.638 UJ	<0.538 U	<0.605 U	NA	<0.59 U	<0.585 U	<0.58 U
1,3-Dichlorobenzene	541-73-1	NS	ug/m3	<0.45 U	<0.53 U	NA	NA	NA	<0.578 U	<0.488 U	<0.548 U	NA	<0.534 U	<0.53 U	<0.52 U
1,3-Dichloropropane	142-28-9	NS	ug/m3	<0.34 U	<0.4 U	NA	NA	NA	<0.445 U	<0.375 U	<0.421 U	NA	<0.411 U	<0.408 U	<0.4 U
1,4-Dichlorobenzene	106-46-7	NS	ug/m3	<0.45 U	<0.53 U	NA	NA	NA	<0.578 U	<0.488 U	<0.548 U	NA	<0.534 U	<0.53 U	<0.52 U
1,4-Dioxane (P-Dioxane)	123-91-1	NS	ug/m3	<0.54 U	<0.63 U	NA	NA	NA	<0.693 U	<0.584 U	<0.657 U	NA	<0.641 U	<0.636 U	<0.63 U
2,2,4-Trimethylpentane	540-84-1	NS	ug/m3	NA	NA	NA	NA	NA	NA	NA	NA	NA	NA	0.288 D	0.32 D
2-Hexanone (MBK)	591-78-6	NS	ug/m3	<0.61 U	<0.72 U	NA	NA	NA	<0.788 U	<0.664 U	<0.747 U	NA	<0.728 U	<0.723 U	<0.71 U
4-Ethyltoluene	622-96-8	NS	ug/m3	0.66 D	<0.43 U	NA	NA	NA	0.52 D	0.718 D	<0.448 U	NA	<0.437 U	<0.434 U	1.3 D
Acetone	67-64-1	NS	ug/m3	12 D	5.2 D	NA	NA	NA	17.2 D	28.7 D	6.74 D	NA	19.3 D	3.23 D	6.2 D
Acrylonitrile	107-13-1	NS	ug/m3	<0.16 U	<0.19 U	NA	NA	NA	3.78 D	1.39 J	<0.198 U	NA	52.8 D	6.51 D	<2.4 U
Allyl Chloride (3-Chloropropene)	107-05-1	NS	ug/m3	<1.2 U	<1.4 U	NA	NA	NA	<1.51 U	<1.27 U	<1.43 U	NA	<1.39 U	<1.38 U	<1.4 U
Benzene	71-43-2	NS	ug/m3	0.33 D	0.53 D	NA	NA	NA	0.953 D	0.855 D	<0.291 U	NA	0.341 D	0.423 D	0.47 D
Benzyl Chloride	100-44-7	NS	ug/m3	<0.38 U	<0.45 U	NA	NA	NA	<0.498 U	<0.42 U	<0.472 U	NA	<0.46 U	<0.457 U	<0.45 U
Bromodichloromethane	75-27-4	NS	ug/m3	<0.5 U	<0.59 U	NA	NA	NA	<0.644 U	<0.543 U	<0.611 U	NA	<0.596 U	<0.591 U	<0.58 U
Bromoethene	593-60-2	NS	ug/m3	<0.33 U	<0.38 U	NA	NA	NA	<0.421 U	<0.355 U	<0.399 U	NA	<0.389 U	<0.386 U	<0.38 U
Bromoform	75-25-2	NS	ug/m3	<0.77 U	<0.91 U	NA	NA	NA	<0.994 U	<0.838 U	<0.943 U	NA	<0.919 U	<0.912 U	<0.9 U
Bromomethane	74-83-9	NS	ug/m3	<0.29 U	<0.34 U	NA	NA	NA	<0.374 U	<0.315 U	<0.354 U	NA	<0.345 U	<0.342 U	<0.34 U
Carbon Disulfide	75-15-0	NS	ug/m3	<0.23 U	<0.27 U	NA	NA	NA	<0.3 U	<0.253 U	<0.284 U	NA	<0.277 U	<0.275 U	<0.27 U
Carbon Tetrachloride	56-23-5	NS	ug/m3	0.47 D	0.39 D	NA	NA	NA	0.424 D	0.357 D	<0.143 U	NA	0.224 D	0.222 D	0.38 D
Chlorobenzene	108-90-7	NS	ug/m3	<0.34 U	<0.4 U	NA	NA	NA	<0.443 U	<0.373 U	<0.42 U	NA	<0.409 U	<0.406 U	<0.4 U
Chloroethane	75-00-3	NS	ug/m3	<0.2 U	<0.23 U	NA	NA	NA	<0.254 U	<0.214 U	<0.241 U	NA	<0.235 U	<0.233 U	<0.23 U
Chloroform	67-66-3	NS	ug/m3	<0.36 U	<0.43 U	NA	NA	NA	2.63 D	0.752 D	<0.445 U	NA	2.73 D	<0.431 U	<0.42 U
Chloromethane	74-87-3	NS	ug/m3	1.4 D	1.3 D	NA	NA	NA	0.874 J	1.98 J	1.43 D	NA	1.73 J	1.24 D	1.2 D
Cis-1,2-Dichloroethene	156-59-2	NS	ug/m3	<0.074 U	<0.087 U	<0.079 UJ	<0.19 U	<0.18 U	<0.191 U	0.257 D	<0.181 U	<0.213 U	2.61 D	<0.175 U	<0.086 U
Cis-1,3-Dichloropropene	10061-01-5	NS	ug/m3	<0.34 U	<0.4 U	NA	NA	NA	<0.437 U	<0.368 U	<0.414 U	NA	<0.403 U	<0.4 U	<0.39 U
Cyclohexane	110-82-7	NS	ug/m3	0.61 D	<0.3 U	NA	NA	NA	0.464 D	0.502 D	<0.314 U	NA	3 D	<0.304 U	<0.3 U
Dibromochloromethane	124-48-1	NS	ug/m3	<0.63 U	<0.75 U	NA	NA	NA	<0.819 U	<0.691 U	<0.777 U	NA	<0.757 U	<0.751 U	<0.74 U
Dichlorodifluoromethane	75-71-8	NS	ug/m3	1.6 D	1.9 D	NA	NA	NA	2.09 D	2.61 D	1.98 D	NA	2.24 D	2.14 D	2 D
Ethyl Acetate	141-78-6	NS	ug/m3	0.86 D	<0.63 U	NA	NA	NA	5.82 D	6.55 D	<0.657 U	NA	1.54 D	1.94 D	2.4 D
Ethylbenzene	100-41-4	NS	ug/m3	0.52 D	<0.38 U	NA	NA	NA	0.668 D	0.634 D	<0.396 U	NA	<0.386 U	<0.383 U	<0.38 U
Hexachlorobutadiene	87-68-3	NS	ug/m3	<0.79 U	<0.93 U	NA	NA	NA	<1.03 UJ	<0.865 U	<0.973 U	NA	<0.948 U	<0.941 U	<0.93 U
Isopropanol	67-63-0	NS	ug/m3	1.7 D	3.1 D	NA	NA	NA	3.19 J	8.41 BD	2.96 D	NA	3.63 D	<1.3 U	2 J
M,P-Xylene	179601-23-1	NS	ug/m3	1.8 D	0.87 D	NA	NA	NA	2.21 D	1.94 D	<0.792 U	NA	<0.772 U	<0.766 U	1.4 D
Methyl Ethyl Ketone (2-Butanone)	78-93-3	NS	ug/m3	1.1 D	0.62 D	NA	NA	NA	2.64 D	1.41 D	0.323 D	NA	0.891 D	0.546 D	0.31 D
Methyl Isobutyl Ketone (4-Methyl-2-Pentanone)	108-10-1	NS	ug/m3	<0.3 U	<0.36 U	NA	NA	NA	<0.394 U	<0.332 U	<0.374 U	NA	<0.364 U	<0.361 U	<0.36 U
Methyl Methacrylate	80-62-6	NS	ug/m3	<0.3 U	2.6 D	NA	NA	NA	<0.394 U	<0.332 U	<0.373 U	NA	0.473 D	0.469 D	<0.36 U
Methylene Chloride	75-09-2	60	ug/m3	7.4 D	19 D	<1.74 UJ	1.07 D	0.727 D	<0.668 U	0.676 D	0.634 D	<0.748 U	<1.85 U	<1.84 U	<1.8 U
Naphthalene	91-20-3	NS	ug/m3	NA	NA	NA	NA	NA	NA	NA	NA	NA	NA	<0.925 U	<0.91 U
n-Heptane	142-82-5	NS	ug/m3	<0.3 U	<0.36 U	NA	NA	NA	0.828 D	0.698 D	<0.374 U	NA	<0.364 U	<0.361 U	<0.36 U
n-Hexane	110-54-3	NS	ug/m3	4.7 D	0.49 D	NA	NA	NA	1.42 D	0.886 D	<0.321 U	NA	0.501 D	0.373 D	0.55 D
o-Xylene (1,2-Dimethylbenzene)	95-47-6	NS	ug/m3	0.61 D	<0.38 U	NA	NA	NA	0.752 D	0.739 D	<0.396 U	NA	<0.386 U	<0.383 U	0.6 D
Propylene	115-07-1	NS	ug/m3	<0.13 U	<0.15 U	NA	NA	NA	<0.166 U	<0.14 U	0.879 D	NA	<0.153 U	1.02 D	<0.15 U
Styrene	100-42-5	NS	ug/m3	0.32 D	<0.37 U	NA	NA	NA	<0.41 U	0.345 D	<0.388 U	NA	<0.379 U	<0.376 U	<0.37 U
Tert-Butyl Methyl Ether	1634-04-4	NS	ug/m3	<0.27 U	<0.32 U	NA	NA	NA	<0.347 U	<0.292 U	<0.329 U	NA	<0.321 U	<0.318 U	<0.31 U
Tetrachloroethene (PCE)	127-18-4	30	ug/m3	<0.5 U	22 D	<0.136 UJ	<0.651 U	0.617 D	<0.652 U	0.55 D	<0.619 U	<0.73 U	<0.603 U	<0.598 U	<0.59 U
Tetrahydrofuran	109-99-9	NS	ug/m3	<0.44 U	<0.52 U	NA	NA	NA	3.18 D	<0.478 U	<0.538 U	NA	<0.524 U	<0.52 U	<0.51 U
Toluene	108-88-3	NS	ug/m3	1.3 D	0.92 D	NA	NA	NA	251 D	3.73 D	0.412 D	NA	0.804 D	1.96 D	1.3 D
Trans-1,2-Dichloroethene	156-60-5	NS	ug/m3	<0.29 U	<0.35 U	<0.079 UJ	<0.381 U	<0.361 U	<0.381 U	<0.322 U	<0.362 U	<0.427 U	<0.352 U	<0.35 U	<0.34 U
Trans-1,3-Dichloropropene	10061-02-6	NS	ug/m3	<0.34 U	<0.4 U	NA	NA	NA	<0.437 U	<0.368 U	<0.414 U	NA	<0.403 U	<0.4 U	<0.39 U
Trichloroethene (TCE)	79-01-6	**2**	ug/m3	0.56 D	**2.2 D**	0.446 J	<0.129 U	**7.29 D**	**6.93 D**	**31.1 D**	0.392 D	1.91 D	**12.8 D**	0.474 D	<0.12 U
Trichlorofluoromethane	75-69-4	NS	ug/m3	1.2 D	1.1 D	NA	NA	NA	1.35 D	1.23 D	0.717 D	NA	1.1 D	0.942 D	1 D
Vinyl Acetate	108-05-4	NS	ug/m3	<0.26 U	<0.31 U	NA	NA	NA	<0.339 U	<0.286 U	<0.321 U	NA	<0.313 UJ	<0.311 UJ	<0.31 UJ
Vinyl Chloride	75-01-4	NS	ug/m3	<0.095 U	<0.11 U	<0.051 UJ	<0.123 U	<0.116 U	<0.123 UJ	<0.104 U	<0.117 U	<0.138 U	<0.114 U	<0.113 U	<0.11 U

Table 1
Indoor Air Sampling
Indoor and Ambient Air Sampling Results

514 Union Street
Brooklyn, New York
NYSDEC BCP Site No.: C224318
Langan Project No.: 170361307

Analyte	CAS Number	NYSDOH AGVs	Location	IA03	IA03	IA03	IA03	IA03	IA03	IA03	IA03	IA03	IA03	IA03	IA03
			Sample Name	IA03_071420	IA03_031921	IA03_112022	IA03_031723	IA03_122623	IA03_011224	IA03_020224	IA03_030424	IA03_051624	IA03_112624	IA03_012825	IA03_032025
			Sample Date	07/14/2020	03/19/2021	11/21/2022	03/17/2023	12/26/2023	01/12/2024	02/02/2024	03/04/2024	05/16/2024	11/26/2024	01/28/2025	03/20/2025
			Sample Type	IA	IA	IA	IA	IA	IA	IA	IA	IA	IA	IA	IA
			Unit	Result	Result	Result	Result	Result	Result	Result	Result	Result	Result	Result	Result
Volatile Organic Compounds															
1,1,1,2-Tetrachloroethane	630-20-6	NS	ug/m3	<0.65 U	<0.58 U	NA	NA	NA	<0.568 U	<0.533 U	<0.573 U	NA	<0.601 U	<0.588 U	<0.62 U
1,1,1-Trichloroethane	71-55-6	NS	ug/m3	<0.51 U	<0.46 U	<0.109 U	<0.54 U	<0.509 U	<0.451 U	<0.423 U	<0.455 U	<0.544 U	<0.477 U	<0.467 U	<0.49 U
1,1,2,2-Tetrachloroethane	79-34-5	NS	ug/m3	<0.65 U	<0.58 U	NA	NA	NA	<0.568 U	<0.533 U	<0.573 U	NA	<0.601 U	<0.588 U	<0.62 U
1,1,2-Trichloro-1,2,2-Trifluoroethane	76-13-1	NS	ug/m3	<0.72 U	<0.65 U	NA	NA	NA	<0.634 U	<0.595 U	<0.639 U	NA	<0.671 U	<0.656 U	<0.69 U
1,1,2-Trichloroethane	79-00-5	NS	ug/m3	<0.51 U	<0.46 U	NA	NA	NA	<0.451 U	<0.423 U	<0.455 U	NA	<0.477 U	<0.467 U	<0.49 U
1,1-Dichloroethane	75-34-3	NS	ug/m3	<0.38 U	<0.34 U	<0.081 U	<0.401 U	<0.377 U	<0.335 U	<0.314 U	<0.338 U	<0.404 U	<0.354 U	<0.346 U	<0.36 U
1,1-Dichloroethene	75-35-4	NS	ug/m3	<0.093 U	<0.084 U	<0.079 U	<0.196 U	<0.185 U	<0.164 U	<0.154 U	<0.165 U	<0.198 U	<0.173 U	<0.17 U	<0.089 U
1,2,4-Trichlorobenzene	120-82-1	NS	ug/m3	<0.7 U	<0.63 U	NA	NA	NA	<0.614 UJ	<0.576 U	<0.619 UJ	NA	<0.649 UJ	<0.635 U	<0.67 U
1,2,4-Trimethylbenzene	95-63-6	NS	ug/m3	0.93 D	0.42 D	NA	NA	NA	0.65 D	0.992 D	0.41 D	NA	<0.43 U	<0.421 U	4.3 D
1,2-Dibromoethane (Ethylene Dibromide)	106-93-4	NS	ug/m3	<0.72 U	<0.65 U	NA	NA	NA	<0.635 U	<0.596 U	<0.641 U	NA	<0.672 U	<0.658 U	<0.69 U
1,2-Dichlorobenzene	95-50-1	NS	ug/m3	<0.57 U	<0.51 U	NA	NA	NA	<0.497 U	<0.467 U	<0.501 U	NA	<0.526 U	<0.515 U	<0.54 U
1,2-Dichloroethane	107-06-2	NS	ug/m3	<0.38 U	<0.34 U	<0.081 U	<0.401 U	<0.377 U	<0.335 U	<0.314 U	<0.338 U	<0.403 U	<0.354 U	<0.346 U	<0.36 U
1,2-Dichloropropane	78-87-5	NS	ug/m3	<0.43 U	<0.39 U	NA	NA	NA	<0.382 U	<0.359 U	<0.385 U	NA	<0.404 U	<0.396 U	<0.42 U
1,2-Dichlorotetrafluoroethane	76-14-2	NS	ug/m3	<0.66 U	<0.59 U	NA	NA	NA	<0.578 U	<0.542 U	<0.583 U	NA	<0.612 U	<0.598 U	<0.63 U
1,3,5-Trimethylbenzene (Mesitylene)	108-67-8	NS	ug/m3	<0.46 U	<0.42 U	NA	NA	NA	<0.407 U	<0.381 U	<0.41 U	NA	<0.43 U	<0.421 U	1.2 D
1,3-Butadiene	106-99-0	NS	ug/m3	<0.62 U	<0.56 U	NA	NA	NA	<0.549 UJ	<0.515 U	<0.554 U	NA	<0.581 U	<0.568 U	<0.6 U
1,3-Dichlorobenzene	541-73-1	NS	ug/m3	<0.57 U	<0.51 U	NA	NA	NA	<0.497 U	<0.467 U	<0.501 U	NA	<0.526 U	<0.515 U	<0.54 U
1,3-Dichloropropane	142-28-9	NS	ug/m3	<0.43 U	<0.39 U	NA	NA	NA	<0.382 U	<0.359 U	<0.385 U	NA	<0.404 U	<0.396 U	<0.42 U
1,4-Dichlorobenzene	106-46-7	NS	ug/m3	<0.57 U	<0.51 U	NA	NA	NA	<0.497 U	<0.467 U	<0.501 U	NA	<0.526 U	<0.515 U	<0.54 U
1,4-Dioxane (P-Dioxane)	123-91-1	NS	ug/m3	<0.68 U	<0.61 U	NA	NA	NA	<0.596 U	<0.559 U	<0.601 U	NA	<0.631 U	<0.617 U	<0.65 U
2,2,4-Trimethylpentane	540-84-1	NS	ug/m3	NA	NA	NA	NA	NA	NA	NA	NA	NA	NA	0.28 D	0.76 D
2-Hexanone (MBK)	591-78-6	NS	ug/m3	<0.77 U	<0.7 U	NA	NA	NA	<0.678 U	<0.636 U	<0.683 U	NA	<0.717 U	<0.701 U	<0.74 U
4-Ethyltoluene	622-96-8	NS	ug/m3	0.74 D	<0.42 U	NA	NA	NA	0.61 D	0.649 D	<0.41 U	NA	<0.43 U	<0.421 U	2.7 D
Acetone	67-64-1	NS	ug/m3	17 D	10 D	NA	NA	NA	11.5 D	20 D	86.7 D	NA	24.6 D	3.11 D	16 D
Acrylonitrile	107-13-1	NS	ug/m3	<0.2 U	<0.18 U	NA	NA	NA	0.197 D	<0.573 U	<0.181 U	NA	<2.47 U	<2.41 U	<2.5 U
Allyl Chloride (3-Chloropropene)	107-05-1	NS	ug/m3	<1.5 U	<1.3 U	NA	NA	NA	<1.29 U	<1.21 U	<1.31 U	NA	<1.37 U	<1.34 U	<1.4 U
Benzene	71-43-2	NS	ug/m3	0.39 D	0.6 D	NA	NA	NA	1.14 D	0.892 D	1.23 D	NA	0.671 D	0.492 D	0.72 D
Benzyl Chloride	100-44-7	NS	ug/m3	<0.49 U	<0.44 U	NA	NA	NA	<0.428 U	<0.402 U	<0.432 U	NA	<0.453 U	<0.443 U	<0.47 U
Bromodichloromethane	75-27-4	NS	ug/m3	<0.63 U	<0.57 U	NA	NA	NA	<0.554 U	<0.52 U	<0.559 U	NA	<0.586 U	<0.573 U	<0.6 U
Bromoethene	593-60-2	NS	ug/m3	<0.41 U	<0.37 U	NA	NA	NA	<0.362 U	<0.339 U	<0.365 U	NA	<0.383 U	<0.374 U	<0.39 U
Bromoform	75-25-2	NS	ug/m3	<0.97 U	<0.88 U	NA	NA	NA	<0.855 U	<0.802 U	<0.862 U	NA	<0.904 U	<0.885 U	<0.93 U
Bromomethane	74-83-9	NS	ug/m3	<0.37 U	<0.33 U	NA	NA	NA	<0.321 U	<0.301 U	<0.324 U	NA	<0.34 U	<0.332 U	<0.35 U
Carbon Disulfide	75-15-0	NS	ug/m3	0.32 D	<0.27 U	NA	NA	NA	<0.258 U	<0.242 U	<0.26 U	NA	<0.272 U	<0.267 U	<0.28 U
Carbon Tetrachloride	56-23-5	NS	ug/m3	0.47 D	0.37 D	NA	NA	NA	0.416 D	0.342 D	0.262 D	NA	0.385 D	0.323 D	0.4 D
Chlorobenzene	108-90-7	NS	ug/m3	<0.43 U	<0.39 U	NA	NA	NA	<0.381 U	<0.357 U	<0.384 U	NA	<0.403 U	<0.394 U	<0.41 U
Chloroethane	75-00-3	NS	ug/m3	<0.25 U	<0.22 U	NA	NA	NA	<0.218 U	<0.205 U	<0.22 U	NA	<0.231 U	<0.226 U	<0.24 U
Chloroform	67-66-3	NS	ug/m3	<0.46 U	<0.42 U	NA	NA	NA	0.646 D	0.379 D	<0.407 U	NA	<0.427 U	<0.418 U	<0.44 U
Chloromethane	74-87-3	NS	ug/m3	1.4 D	1.1 D	NA	NA	NA	0.922 J	1.91 J	1.33 D	NA	1.92 J	1.24 D	1.2 D
Cis-1,2-Dichloroethene	156-59-2	NS	ug/m3	<0.093 U	<0.084 U	<0.079 U	<0.196 U	<0.185 U	<0.164 U	<0.154 U	<0.165 U	<0.198 U	<0.173 U	<0.17 U	<0.089 U
Cis-1,3-Dichloropropene	10061-01-5	NS	ug/m3	<0.43 U	<0.39 U	NA	NA	NA	<0.375 U	<0.352 U	<0.379 U	NA	<0.397 U	<0.389 U	<0.41 U
Cyclohexane	110-82-7	NS	ug/m3	0.74 D	<0.29 U	NA	NA	NA	0.512 D	0.641 D	0.287 D	NA	<0.301 U	<0.295 U	0.43 D
Dibromochloromethane	124-48-1	NS	ug/m3	<0.8 U	<0.72 U	NA	NA	NA	<0.704 U	<0.661 U	<0.71 U	NA	<0.745 U	<0.729 U	<0.77 U
Dichlorodifluoromethane	75-71-8	NS	ug/m3	1.5 D	2.1 D	NA	NA	NA	2.21 D	2.72 D	2.02 D	NA	2.29 D	2.12 D	2 D
Ethyl Acetate	141-78-6	NS	ug/m3	9.2 D	<0.61 U	NA	NA	NA	5.13 D	3.36 D	4 D	NA	1.1 D	1.97 D	11 D
Ethylbenzene	100-41-4	NS	ug/m3	0.61 D	<0.37 U	NA	NA	NA	0.646 D	0.607 D	0.688 D	NA	<0.38 U	<0.372 U	0.9 D
Hexachlorobutadiene	87-68-3	NS	ug/m3	<1 U	<0.91 U	NA	NA	NA	<0.882 UJ	<0.828 U	<0.889 U	NA	<0.933 U	<0.913 U	<0.96 U
Isopropanol	67-63-0	NS	ug/m3	2.2 D	5.4 D	NA	NA	NA	3.33 J	6.87 BD	33 D	NA	3.66 D	<1.26 U	2.5 J
M,P-Xylene	179601-23-1	NS	ug/m3	2 D	0.74 D	NA	NA	NA	2.37 D	2.39 D	1.27 D	NA	0.874 D	<0.743 U	3.9 D
Methyl Ethyl Ketone (2-Butanone)	78-93-3	NS	ug/m3	1.2 D	1.7 D	NA	NA	NA	1.32 D	1.12 D	0.664 D	NA	1.03 D	0.606 D	0.58 D
Methyl Isobutyl Ketone (4-Methyl-2-Pentanone)	108-10-1	NS	ug/m3	<0.39 U	<0.35 U	NA	NA	NA	<0.339 U	<0.318 U	<0.342 U	NA	<0.358 U	<0.351 U	0.44 D
Methyl Methacrylate	80-62-6	NS	ug/m3	<0.39 U	4 D	NA	NA	NA	<0.339 U	<0.318 U	<0.341 U	NA	0.788 D	0.385 D	<0.37 U
Methylene Chloride	75-09-2	60	ug/m3	0.69 D	26 D	<1.74 U	1.07 D	0.712 D	<0.575 U	0.62 D	0.927 D	<0.693 U	<1.82 U	<1.78 U	<1.9 U
Naphthalene	91-20-3	NS	ug/m3	NA	NA	NA	NA	NA	NA	NA	NA	NA	NA	<0.897 U	<0.94 U
n-Heptane	142-82-5	NS	ug/m3	<0.39 U	<0.35 U	NA	NA	NA	0.915 D	0.827 D	<0.342 U	NA	<0.359 U	<0.351 U	0.78 D
n-Hexane	110-54-3	NS	ug/m3	0.9 D	0.45 D	NA	NA	NA	1.95 D	0.903 D	0.382 D	NA	0.401 D	0.513 D	1.4 D
o-Xylene (1,2-Dimethylbenzene)	95-47-6	NS	ug/m3	0.69 D	<0.37 U	NA	NA	NA	0.826 D	0.809 D	0.471 D	NA	<0.38 U	<0.372 U	1.7 D
Propylene	115-07-1	NS	ug/m3	<0.16 U	<0.15 U	NA	NA	NA	<0.142 U	<0.134 U	0.775 D	NA	<0.151 U	0.84 D	<0.16 U
Styrene	100-42-5	NS	ug/m3	0.44 D	<0.36 U	NA	NA	NA	<0.352 U	<0.331 U	0.355 D	NA	<0.373 U	<0.365 U	<0.38 U
Tert-Butyl Methyl Ether	1634-04-4	NS	ug/m3	<0.34 U	<0.31 U	NA	NA	NA	<0.298 U	<0.28 U	<0.301 U	NA	<0.315 U	<0.309 U	<0.32 U
Tetrachloroethene (PCE)	127-18-4	30	ug/m3	<0.64 U	<0.58 U	0.38	<0.671 U	0.759 D	<0.561 U	0.526 D	<0.566 U	<0.676 U	<0.593 U	<0.581 U	<0.61 U
Tetrahydrofuran	109-99-9	NS	ug/m3	<0.56 U	<0.5 U	NA	NA	NA	<0.488 U	<0.458 U	<0.492 U	NA	<0.516 U	<0.505 U	<0.53 U
Toluene	108-88-3	NS	ug/m3	1.6 D	0.9 D	NA	NA	NA	11.1 D	3.92 D	1.82 D	NA	1.12 D	1.81 D	3.2 D
Trans-1,2-Dichloroethene	156-60-5	NS	ug/m3	<0.37 U	<0.34 U	<0.079 U	<0.393 U	<0.37 U	<0.328 U	<0.308 U	<0.331 U	<0.395 U	<0.347 U	<0.339 U	<0.36 U
Trans-1,3-Dichloropropene	10061-02-6	NS	ug/m3	<0.43 U	<0.39 U	NA	NA	NA	<0.375 U	<0.352 U	<0.379 U	NA	<0.397 U	<0.389 U	<0.41 U
Trichloroethene (TCE)	79-01-6	**2**	ug/m3	0.71 D	1.9 D	0.511	<0.133 U	**5.71 D**	**3.29 D**	**3.67 D**	<0.112 U	<0.134 U	**4.23 D**	<0.115 U	<0.12 U
Trichlorofluoromethane	75-69-4	NS	ug/m3	1.3 D	1.1 D	NA	NA	NA	1.49 D	1.26 D	0.984 D	NA	1.18 D	1.11 D	1 D
Vinyl Acetate	108-05-4	NS	ug/m3	<0.33 U	<0.3 U	NA	NA	NA	<0.291 U	<0.273 U	<0.294 U	NA	<0.308 UJ	<0.301 UJ	<0.32 UJ
Vinyl Chloride	75-01-4	NS	ug/m3	<0.12 U	<0.11 U	<0.051 U	<0.127 U	<0.119 U	<0.106 UJ	<0.0992 U	<0.107 U	<0.127 U	<0.112 U	<0.109 U	<0.12 U

Table 1
Indoor Air Sampling
Indoor and Ambient Air Sampling Results

514 Union Street
Brooklyn, New York
NYSDEC BCP Site No.: C224318
Langan Project No.: 170361307

Analyte	CAS Number	NYSDOH AGVs	Location	IA04	IA04	IA04	IA04	IA04	IA04	IA04	IA04	IA04	IA04	IA04
			Sample Name	IA04_031921	IA04_112022	IA04_031723	IA04_122623	IA04_011224	IA04_020224	IA04_030424	IA04_051624	IA04_112624	IA04_012825	IA04_032025
			Sample Date	03/19/2021	11/21/2022	03/17/2023	12/26/2023	01/12/2024	02/02/2024	03/04/2024	05/16/2024	11/26/2024	01/28/2025	03/20/2025
			Sample Type	IA	IA	IA	IA	IA	IA	IA	IA	IA	IA	IA
			Unit	Result	Result	Result	Result	Result	Result	Result	Result	Result	Result	Result
Volatile Organic Compounds														
1,1,1,2-Tetrachloroethane	630-20-6	NS	ug/m3	<0.55 U	NA	NA	NA	<0.517 U	<0.562 U	<0.615 U	NA	<0.649 U	<0.595 U	<0.62 U
1,1,1-Trichloroethane	71-55-6	NS	ug/m3	<0.44 U	<0.109 U	<0.448 U	<0.518 U	<0.411 U	<0.447 U	<0.489 U	<0.489 U	<0.516 U	<0.473 U	<0.49 U
1,1,2,2-Tetrachloroethane	79-34-5	NS	ug/m3	<0.55 U	NA	NA	NA	<0.517 U	<0.562 U	<0.615 U	NA	<0.649 U	<0.595 U	<0.62 U
1,1,2-Trichloro-1,2,2-Trifluoroethane	76-13-1	NS	ug/m3	<0.61 U	NA	NA	NA	<0.577 U	<0.628 U	<0.687 U	NA	<0.724 U	<0.664 U	<0.69 U
1,1,2-Trichloroethane	79-00-5	NS	ug/m3	<0.44 U	NA	NA	NA	<0.411 U	<0.447 U	<0.489 U	NA	<0.516 U	<0.473 U	<0.49 U
1,1-Dichloroethane	75-34-3	NS	ug/m3	<0.32 U	<0.081 U	<0.332 U	<0.385 U	<0.305 U	<0.331 U	<0.363 U	<0.363 U	<0.382 U	<0.351 U	<0.36 U
1,1-Dichloroethene	75-35-4	NS	ug/m3	<0.079 U	<0.079 U	<0.163 U	<0.188 U	<0.149 U	<0.162 U	<0.178 U	<0.178 U	<0.187 U	<0.172 U	<0.089 U
1,2,4-Trichlorobenzene	120-82-1	NS	ug/m3	<0.59 U	NA	NA	NA	<0.559 UJ	<0.608 U	<0.665 UJ	NA	<0.701 UJ	<0.643 U	<0.67 U
1,2,4-Trimethylbenzene	95-63-6	NS	ug/m3	0.47 D	NA	NA	NA	0.518 D	0.765 D	<0.44 U	NA	<0.465 U	<0.426 U	3 D
1,2-Dibromoethane (Ethylene Dibromide)	106-93-4	NS	ug/m3	<0.61 U	NA	NA	NA	<0.579 U	<0.629 U	<0.688 U	NA	<0.726 U	<0.666 U	<0.69 U
1,2-Dichlorobenzene	95-50-1	NS	ug/m3	<0.48 U	NA	NA	NA	<0.453 U	<0.492 U	<0.539 U	NA	<0.568 U	<0.521 U	<0.54 U
1,2-Dichloroethane	107-06-2	NS	ug/m3	<0.32 U	<0.081 U	<0.332 U	<0.384 U	<0.305 U	<0.331 U	<0.363 U	<0.363 U	<0.382 U	<0.351 U	<0.36 U
1,2-Dichloropropane	78-87-5	NS	ug/m3	<0.37 U	NA	NA	NA	<0.348 U	<0.378 U	<0.414 U	NA	<0.437 U	<0.401 U	<0.41 U
1,2-Dichlorotetrafluoroethane	76-14-2	NS	ug/m3	<0.56 U	NA	NA	NA	<0.526 U	<0.573 U	<0.626 U	NA	<0.661 U	<0.606 U	<0.63 U
1,3,5-Trimethylbenzene (Mesitylene)	108-67-8	NS	ug/m3	<0.39 U	NA	NA	NA	<0.37 U	<0.403 U	<0.44 U	NA	<0.465 U	<0.426 U	0.84 D
1,3-Butadiene	106-99-0	NS	ug/m3	<0.53 U	NA	NA	NA	<0.5 UJ	<0.544 U	<0.595 U	NA	<0.627 U	<0.575 U	<0.6 U
1,3-Dichlorobenzene	541-73-1	NS	ug/m3	<0.48 U	NA	NA	NA	<0.453 U	<0.492 U	<0.539 U	NA	<0.568 U	<0.521 U	<0.54 U
1,3-Dichloropropane	142-28-9	NS	ug/m3	<0.37 U	NA	NA	NA	<0.348 U	<0.378 U	<0.414 U	NA	<0.437 U	<0.401 U	<0.41 U
1,4-Dichlorobenzene	106-46-7	NS	ug/m3	<0.48 U	NA	NA	NA	<0.453 U	<0.492 U	<0.539 U	NA	<0.568 U	<0.521 U	<0.54 U
1,4-Dioxane (P-Dioxane)	123-91-1	NS	ug/m3	<0.58 U	NA	NA	NA	<0.543 U	<0.59 U	<0.646 U	NA	<0.681 U	<0.625 U	<0.65 U
2,2,4-Trimethylpentane	540-84-1	NS	ug/m3	NA	NA	NA	NA	NA	NA	NA	NA	NA	0.405 D	0.63 D
2-Hexanone (MBK)	591-78-6	NS	ug/m3	<0.65 U	NA	NA	NA	<0.617 U	<0.671 U	<0.734 U	NA	<0.774 U	<0.71 U	0.96 D
4-Ethyltoluene	622-96-8	NS	ug/m3	0.39 D	NA	NA	NA	0.481 D	0.523 D	<0.44 U	NA	<0.465 U	<0.426 U	2.1 D
Acetone	67-64-1	NS	ug/m3	7.3 D	NA	NA	NA	9.82 D	12.9 D	5.36 D	NA	21.8 D	4.86 D	5.8 D
Acrylonitrile	107-13-1	NS	ug/m3	<0.17 U	NA	NA	NA	0.327 D	<0.355 U	<0.194 U	NA	<2.67 U	<2.45 U	1.1 JD
Allyl Chloride (3-Chloropropene)	107-05-1	NS	ug/m3	<1.3 U	NA	NA	NA	<1.18 U	<1.28 U	<1.4 U	NA	<1.48 U	<1.36 U	<1.4 U
Benzene	71-43-2	NS	ug/m3	0.51 D	NA	NA	NA	0.818 D	0.863 D	1.12 D	NA	0.936 D	0.609 D	0.55 D
Benzyl Chloride	100-44-7	NS	ug/m3	<0.41 U	NA	NA	NA	<0.39 U	<0.424 U	<0.464 U	NA	<0.489 U	<0.449 U	<0.46 U
Bromodichloromethane	75-27-4	NS	ug/m3	<0.54 U	NA	NA	NA	<0.504 U	<0.549 U	<0.6 U	NA	<0.633 U	<0.581 U	<0.6 U
Bromoethene	593-60-2	NS	ug/m3	<0.35 U	NA	NA	NA	<0.329 U	<0.358 U	<0.392 U	NA	<0.413 U	<0.379 U	<0.39 U
Bromoform	75-25-2	NS	ug/m3	<0.83 U	NA	NA	NA	<0.778 U	<0.847 U	<0.926 U	NA	<0.977 U	<0.896 U	<0.93 U
Bromomethane	74-83-9	NS	ug/m3	<0.31 U	NA	NA	NA	<0.292 U	<0.318 U	<0.348 U	NA	<0.367 U	<0.337 U	<0.35 U
Carbon Disulfide	75-15-0	NS	ug/m3	<0.25 U	NA	NA	NA	<0.234 U	<0.255 U	<0.279 U	NA	<0.294 U	<0.27 U	<0.28 U
Carbon Tetrachloride	56-23-5	NS	ug/m3	0.45 D	NA	NA	NA	0.426 D	0.361 D	0.282 D	NA	0.416 D	0.273 D	0.45 D
Chlorobenzene	108-90-7	NS	ug/m3	<0.37 U	NA	NA	NA	<0.347 U	<0.377 U	<0.412 U	NA	<0.435 U	<0.399 U	<0.41 U
Chloroethane	75-00-3	NS	ug/m3	<0.21 U	NA	NA	NA	<0.199 U	<0.216 U	<0.236 U	NA	<0.249 U	<0.229 U	<0.24 U
Chloroform	67-66-3	NS	ug/m3	<0.39 U	NA	NA	NA	0.699 D	<0.4 U	<0.437 U	NA	<0.461 U	<0.423 U	<0.44 U
Chloromethane	74-87-3	NS	ug/m3	1.1 D	NA	NA	NA	0.809 J	1.86 J	1.05 D	NA	1.68 J	1.34 D	1.3 D
Cis-1,2-Dichloroethene	156-59-2	NS	ug/m3	0.19 D	<0.079 U	<0.163 U	<0.188 U	<0.149 U	<0.162 U	<0.178 U	<0.178 U	<0.187 U	<0.172 U	<0.089 U
Cis-1,3-Dichloropropene	10061-01-5	NS	ug/m3	<0.36 U	NA	NA	NA	<0.342 U	<0.372 U	<0.407 U	NA	<0.429 U	<0.394 U	<0.41 U
Cyclohexane	110-82-7	NS	ug/m3	<0.28 U	NA	NA	NA	0.363 D	0.423 D	<0.308 U	NA	<0.325 U	<0.298 U	<0.31 U
Dibromochloromethane	124-48-1	NS	ug/m3	<0.68 U	NA	NA	NA	<0.641 U	<0.698 U	<0.763 U	NA	<0.805 U	<0.739 U	<0.76 U
Dichlorodifluoromethane	75-71-8	NS	ug/m3	2.2 D	NA	NA	NA	2.01 D	2.71 D	2.08 D	NA	2.29 D	2.1 D	2.1 D
Ethyl Acetate	141-78-6	NS	ug/m3	0.86 D	NA	NA	NA	3.96 D	2.66 D	1.49 D	NA	0.987 D	3.87 D	1.3 D
Ethylbenzene	100-41-4	NS	ug/m3	<0.35 U	NA	NA	NA	0.523 D	0.462 D	0.661 D	NA	<0.41 U	0.376 D	0.7 D
Hexachlorobutadiene	87-68-3	NS	ug/m3	<0.85 U	NA	NA	NA	<0.803 UJ	<0.873 U	<0.956 U	NA	<1.01 U	<0.925 U	<0.96 U
Isopropanol	67-63-0	NS	ug/m3	5.6 D	NA	NA	NA	3.72 J	3.58 J	3.33 D	NA	2.83 D	4.73 D	1.9 J
M,P-Xylene	179601-23-1	NS	ug/m3	1.1 D	NA	NA	NA	1.96 D	1.56 D	0.934 D	NA	0.903 D	1.36 D	2.8 D
Methyl Ethyl Ketone (2-Butanone)	78-93-3	NS	ug/m3	0.99 D	NA	NA	NA	1.29 D	0.918 D	0.502 D	NA	0.892 D	1.48 D	0.32 D
Methyl Isobutyl Ketone (4-Methyl-2-Pentanone)	108-10-1	NS	ug/m3	<0.33 U	NA	NA	NA	<0.308 U	<0.336 U	<0.367 U	NA	<0.387 U	<0.355 U	<0.37 U
Methyl Methacrylate	80-62-6	NS	ug/m3	2.1 D	NA	NA	NA	<0.308 U	<0.335 U	<0.367 U	NA	0.89 D	<0.355 U	<0.37 U
Methylene Chloride	75-09-2	60	ug/m3	10 D	<1.74 U	0.97 D	0.726 D	<0.523 U	0.597 D	0.685 D	<0.623 U	<1.97 U	<1.81 U	<1.9 U
Naphthalene	91-20-3	NS	ug/m3	NA	NA	NA	NA	NA	NA	NA	NA	NA	<0.909 U	<0.94 U
n-Heptane	142-82-5	NS	ug/m3	0.39 D	NA	NA	NA	0.71 D	0.604 D	<0.367 U	NA	<0.387 U	<0.355 U	0.55 D
n-Hexane	110-54-3	NS	ug/m3	0.51 D	NA	NA	NA	1.09 D	0.808 D	<0.316 U	NA	0.366 D	0.581 D	0.85 D
o-Xylene (1,2-Dimethylbenzene)	95-47-6	NS	ug/m3	0.38 D	NA	NA	NA	0.654 D	0.569 D	0.389 D	NA	<0.41 U	0.489 D	1.2 D
Propylene	115-07-1	NS	ug/m3	<0.14 U	NA	NA	NA	<0.13 U	<0.141 U	0.709 D	NA	<0.163 U	0.925 D	<0.15 U
Styrene	100-42-5	NS	ug/m3	<0.34 U	NA	NA	NA	<0.321 U	<0.349 U	<0.382 U	NA	<0.403 U	<0.369 U	<0.38 U
Tert-Butyl Methyl Ether	1634-04-4	NS	ug/m3	<0.29 U	NA	NA	NA	<0.271 U	<0.295 U	<0.323 U	NA	<0.341 U	<0.313 U	<0.32 U
Tetrachloroethene (PCE)	127-18-4	30	ug/m3	0.98 D	<0.136 U	<0.557 U	0.838 D	<0.511 U	<0.555 U	<0.608 U	<0.608 U	<0.641 U	<0.588 U	<0.61 U
Tetrahydrofuran	109-99-9	NS	ug/m3	<0.47 U	NA	NA	NA	0.555 D	<0.483 U	<0.529 U	NA	<0.557 U	<0.511 U	<0.53 U
Toluene	108-88-3	NS	ug/m3	1.4 D	NA	NA	NA	11.6 D	2.1 D	1.42 D	NA	1.32 D	1.9 D	2.4 D
Trans-1,2-Dichloroethene	156-60-5	NS	ug/m3	<0.32 U	<0.079 U	<0.326 U	<0.377 U	<0.299 U	<0.325 U	<0.355 U	<0.356 U	<0.375 U	<0.344 U	<0.36 U
Trans-1,3-Dichloropropene	10061-02-6	NS	ug/m3	<0.36 U	NA	NA	NA	<0.342 U	<0.372 U	<0.407 U	NA	<0.429 U	<0.394 U	<0.41 U
Trichloroethene (TCE)	79-01-6	**2**	ug/m3	**43 D**	0.494	<0.11 U	**5.41 D**	**3.12 D**	**2.99 D**	<0.12 U	0.145 D	**4.98 D**	0.14 D	<0.12 U
Trichlorofluoromethane	75-69-4	NS	ug/m3	1.2 D	NA	NA	NA	1.31 D	1.24 D	0.957 D	NA	1.17 D	1.12 D	1.1 D
Vinyl Acetate	108-05-4	NS	ug/m3	<0.28 U	NA	NA	NA	<0.265 U	<0.288 U	<0.315 U	NA	<0.333 UJ	<0.305 UJ	<0.32 UJ
Vinyl Chloride	75-01-4	NS	ug/m3	<0.1 U	<0.051 U	<0.105 U	<0.121 U	<0.0962 UJ	<0.105 U	<0.115 U	<0.115 U	<0.121 U	<0.111 U	<0.11 U

Table 1
Indoor Air Sampling
Indoor and Ambient Air Sampling Results

514 Union Street
Brooklyn, New York
NYSDEC BCP Site No.: C224318
Langan Project No.: 170361307

Notes:

AA - Ambient Air
IA - Indoor Air
CAS - Chemical Abstract Service
NS - No standard
ug/m3 - microgram per cubic meter
NA - Not analyzed
RL - Reporting limit
<RL - Not detected
Indoor air sample analytical results are compared to the New York State Department of Health (NYSDOH) Air Guideline Values (AGVs) as set forth in the NYSDOH October 2006 Guidance for Evaluating Soil Vapor Intrusion in the State of New York and subsequent updates (through to 2017).
Ambient air sample analytical results are shown for reference only.

Qualifiers:

D - The concentration reported is a result of a diluted sample.
E - The result is estimated and cannot be accurately reported due to levels encountered or interferences.
B - The analyte was found in the associated analysis batch blank.
J - The analyte was positively identified and the associated numerical value is the approximate concentration of the analyte in the sample.
UJ - The analyte was not detected at a level greater than or equal to the RL; however, the reported RL is approximate and may be inaccurate or imprecise.
U - The analyte was analyzed for, but was not detected at a level greater than or equal to the level of the RL or the sample concentration for results impacted by blank contamination.

Exceedance Summary:

10 - Result exceeds NYSDOH AGVs

ATTACHMENT A

SVI MITIGATION SYSTEM RECORD DRAWINGS

UNION STREET

4-INCH-DIAMETER VENTILATION POINT THROUGH FINISHED FLOOR PLATFORM WITH METAL RISER PIPE TO ROOF

ROOF-MOUNTED 4-INCH-DIAMETER METAL PIPE TO BLOWER MANIFOLD

SEALED UTILITY ACCESS HATCH

SEALED UTILITY ACCESS HATCH

DISCHARGE POINT ON ROOF WITH VENT CAP

ROOF-MOUNTED BLOWER SKID

SEALED UTILITY ACCESS HATCH

ELECTRIC CONTROL PANEL

SITE BOUNDARY

VP-01

VP-02

VP-03

VP-04

SEE DETAIL 8 ON DRAWING NO. 2 FOR HORIZONTAL VAPOR COLLECTION PIPE EXTENSION BETWEEN FINISHED FLOOR PLATFORM AND CONCRETE SLAB

VOID BELOW FINISHED FLOOR PLATFORM

BUTTERFLY VALVE, VACUUM GAUGE AND SAMPLE PORT ON ROOF-MOUNTED PIPE

ROOF-MOUNTED 8-INCH-DIAMETER HEADER PIPE (BLOWER MANIFOLD) TO BLOWER SKID

GENERAL NOTES:

1. BASE MAP ADAPTED FROM DRAWING NO. A-001.00, TITLED "PROPOSED GROUND FLOOR PLAN" BY ANDRE TCHELISTCHEFF ARCHITECTS, DATED 13 AUGUST 2013 AND SURVEY BY NEW YORK CITY LAND SURVEYORS, PC, DATED 14 JUNE 2019.
2. DRAWING SHALL NOT BE USED FOR STRUCTURAL, ARCHITECTURAL, UTILITY, OR OTHER REFERENCE EXCEPT FOR THE SOIL VAPOR INTRUSION (SVI) MITIGATION SYSTEM.
3. VAULTS, HATCHES, CRACKS, VOIDS, AND PENETRATIONS IDENTIFIED BY THE ENGINEER ON THE GROUND FLOOR WERE SEALED WITH POLYURETHANE-BASED CAULKING, CEMENT, OR FOAM AND RUBBER WEATHER PROOFING STRIPS.

VENTILATION POINT AND RISER PIPE NOTES:

1. LOCATION OF VENTILATION POINTS WERE MOVED BASED ON SITE CONDITIONS WITH APPROVAL OF THE ENGINEER.
2. AN ELBOW WAS INSTALLED AT VP-03 TO DIRECT AIR FLOW. SEE DETAIL 8.
3. ALL FITTINGS AND CONNECTIONS FOR THE VAPOR COLLECTION AND RISER PIPES ARE 4-INCH-DIAMETER METAL FITTINGS EXCEPT 8-INCH-DIAMETER MANIFOLD.
4. RISER PIPE PENETRATIONS THROUGH THE FINISHED FLOOR PLATFORM ARE SEALED WITH A POLYURETHANE-BASED CAULK.
5. RISER PIPE IS CLEARLY LABELED "CAUTION: DO NOT ALTER SUB-FLOOR VAPOR VENT PIPE" IN EACH ACCESSIBLE AREA AT A MINIMUM OF EVERY 10 LINEAR FEET OF RISER PIPE RUN.
6. SYSTEM INSTALLATION ADHERES TO OCTOBER 2006 FINAL GUIDANCE FOR EVALUATING SOIL VAPOR INTRUSION IN THE STATE OF NEW YORK PREPARED BY THE NEW YORK STATE DEPARTMENT OF HEALTH (NYSDOH) AND SUBSEQUENT UPDATES, AND 2014 NEW YORK CITY MECHANICAL CODE, CHAPTER 5, SECTION MC 512-SUBSLAB SOIL EXHAUST SYSTEMS.
7. POINT OF EXHAUST IS:
   - A. ABOVE THE EAVE OF THE ROOF AND AT LEAST 24-INCHES ABOVE THE SURFACE OF THE ROOF;
   - B. AT LEAST 10 FEET ABOVE GROUND LEVEL;
   - C. AT LEAST 10 FEET AWAY FROM ANY OPERABLE AIR INTAKE THAT IS LESS THAN 2 FEET BELOW THE DISCHARGE POINT; AND
   - D. 10 FEET FROM ANY ADJOINING OR ADJACENT BUILDINGS, HVAC INTAKES, OR HVAC SUPPLY REGISTERS.
12. INSTALLED VENT CAP IS SMITH® NO. 1748 SERIES LOW TYPE VANDAL PROOF VENT CAP.

SCALE: 1 INCH = 8 FEET

Date	Description	No.
–	–	–

REVISIONS

STATE OF NEW YORK JASON JAMES HAYES LICENSED PROFESSIONAL ENGINEER 089491

03/09/2023
DATE SIGNED
SIGNATURE
PROFESSIONAL ENGINEER
STATE LIC. No. 089491

LANGAN
Langan Engineering, Environmental, Surveying, Landscape Architecture and Geology, D.P.C.
21 Penn Plaza, 360 West 31st Street, 8th Floor
New York, NY 10001
T: 212.479.5400 F: 212.479.5444 www.langan.com

Project
514 UNION STREET
BLOCK No. 440, LOT No. 12
BROOKLYN
KINGS COUNTY NEW YORK

Drawing Title
SVI MITIGATION SYSTEM - AS BUILT

Project No.	Drawing No.
170361305	1
Date: 11/28/2022	Sheet 1 of 2
Drawn By: AJ	
Checked By: PM	

LANGAN
PROJECT NO. 170361305

©2023 Langan

Filename: \\langan.com\data\NYC\data3\170361301\Cadd Data - 170361301\SheetFiles\Environmental\514 Union Street\CCR\SSD Design\SVI Mitigation System Plan - As Built.dwg Date: 3/9/2023 Time: 14:15 User: acaelwaerts Style Table: Langan.stb Layout: SVI Mitigation System Plan

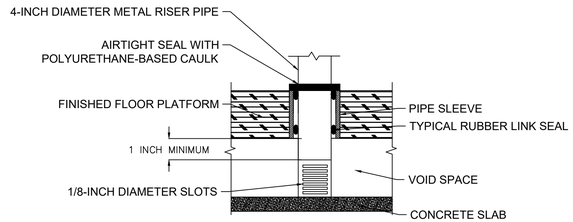

DETAIL 1: TYPICAL VAPOR COLLECTION PIPE TO RISER PIPE CONNECTION (SECTION VIEW)
NOT TO SCALE

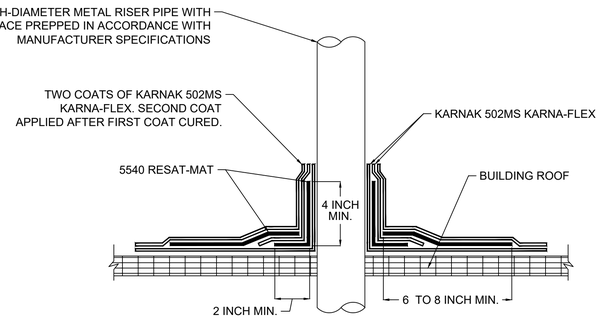

NOTE: DETAIL USED IN CONJUNCTION WITH KARNAK® GENERAL REQUIREMENTS, APPLICATION METHODS AND APPROVED DETAILS.

DETAIL 2: ROOF PENETRATION (SECTION VIEW)
NOT TO SCALE

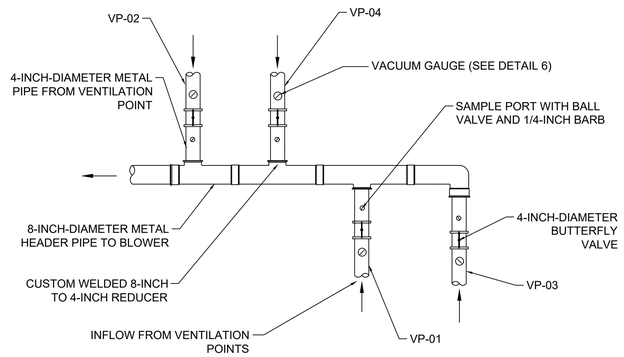

DETAIL 3: TYPICAL BLOWER MANIFOLD ASSEMBLY
NOT TO SCALE

VACUUM BLOWER NOTES:

1. THE BLOWER ASSEMBLY (AIRTECH 3BA1400-7AT06 [A 161]) PROVIDES, AT CONTINUOUS OPERATION, A MINIMUM FLOW RATE OF 60 CUBIC FEET PER MINUTE (CFM) AND A VACUUM OF 10 INCHES OF WATER COLUMN (IN. WC) AT THE BLOWER.
2. THE BLOWER SCHEMATIC IS SHOWN TO ILLUSTRATE THE COMPONENTS AND THE GENERAL LOCATION IN THE PIPE RUN. REFER TO BLOWER SPECIFICATIONS AND CUT SHEETS FOR ADDITIONAL DETAILS.
3. OMNIBEACON REMOTE ALARM IS CONNECTED TO A CELLULAR NETWORK AND CAPABLE OF NOTIFYING MULTIPLE PARTIES VIA EMAIL, TEXT MESSAGE, AND PHONE CALL IF THE VACUUM BLOWER STOPS OPERATING.

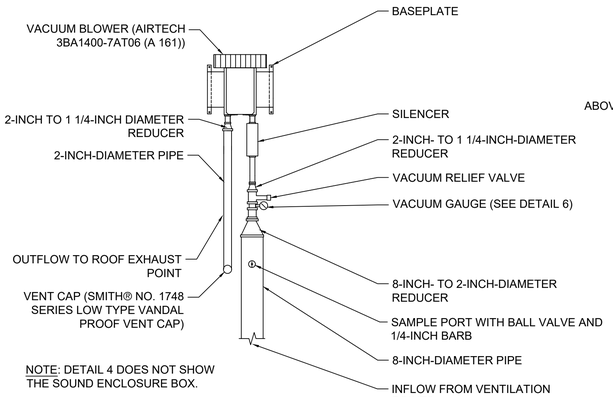

NOTE: DETAIL 4 DOES NOT SHOW THE SOUND ENCLOSURE BOX.

DETAIL 4: VACUUM BLOWER ASSEMBLY (PLAN VIEW)
NOT TO SCALE

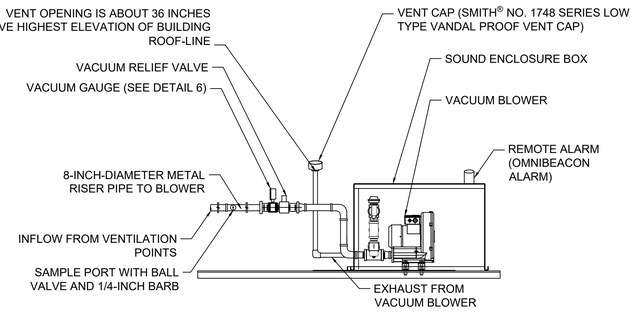

DETAIL 5: VACUUM BLOWER ASSEMBLY (SECTION VIEW)
NOT TO SCALE

NOTE: WIKA® TYPE 611.10 LOW PRESSURE CAPSULE GAUGE RANGING FROM -100 TO 0 in H_20

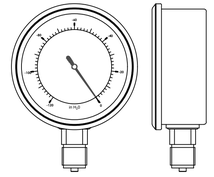

DETAIL 6: VACUUM GAUGE
NOT TO SCALE

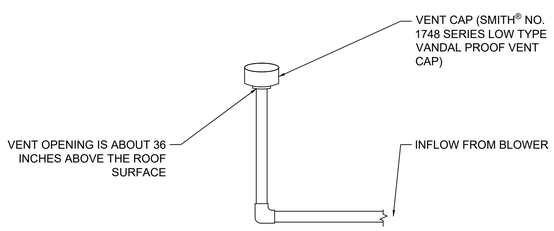

DETAIL 7: TYPICAL DISCHARGE POINT (SECTION VIEW)
NOT TO SCALE

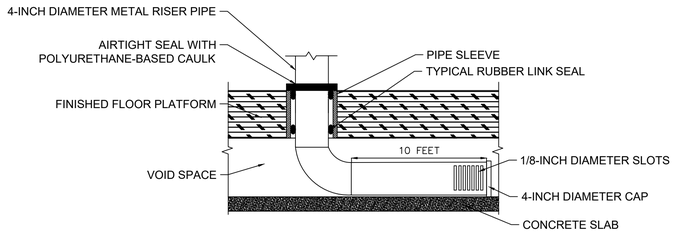

DETAIL 8: VP-03 HORIZONTAL VAPOR COLLECTION PIPE TO RISER PIPE CONNECTION (SECTION VIEW)
NOT TO SCALE

Date	Description	No.
–	–	–

REVISIONS

STATE OF NEW YORK · JASON JAMES HAYES · LICENSED PROFESSIONAL ENGINEER · SIGNATURE 089491

03/09/2023
DATE SIGNED

PROFESSIONAL ENGINEER
STATE LIC. No. 089491

LANGAN
Langan Engineering, Environmental, Surveying, Landscape Architecture and Geology, D.P.C.
21 Penn Plaza, 360 West 31st Street, 8th Floor
New York, NY 10001
T: 212.479.5400 F: 212.479.5444 www.langan.com

Project
514 UNION STREET
BLOCK No. 440, LOT No. 12
BROOKLYN
KINGS COUNTY NEW YORK

Drawing Title
SVI MITIGATION SYSTEM DETAILS

Project No. 170361305
Date 11/28/2022
Drawn By AJ
Checked By PM

Drawing No. 2
Sheet 2 of 2

LANGAN
PROJECT NO. 170361305

© 2021 Langan

Filename: \\langan.com\data\NYC\data3\170361301\Cadd Data - 170361301\Sheet Files\Environmental\514 Union Street\CCR\SSD Design\SVI Mitigation System Plan - As Built.dwg Date: 3/9/2023 Time: 14:16 User: acaelwaerts Style Table: Langan.stb Layout: SVI Mitigation System Details

ATTACHMENT B

NYSDEC AND TENANT CORRESPONDENCE

December 12, 2024

Gowanus President Owner LLC
400 West 59th Street
New York, New York 10019

Re: Indoor Air Sample Results (November 2024)
514 Union Street
Brooklyn, New York
NYSDEC BCP Site No. C224318

Langan Engineering, Environmental, Surveying, Landscape Architecture and Geology, D.P.C. (Langan) prepared this letter to facilitate tenant notification[1] of indoor air sample results collected on November 26, 2024 at 514 Union Street in Brooklyn, New York (the site). Indoor air samples were collected as part of ongoing soil vapor intrusion (SVI) monitoring required by the New York State Department of Environmental Conservation (NYSDEC) and the New York State Department of Health (NYSDOH) due to the presence of volatile organic compounds (VOCs) in groundwater and soil vapor.

Five rounds of indoor air sampling were previously conducted on *December 26, 2023*, *January 12, 2024*, *February 4, 2024*, *March 4, 2024,* and *March 22, 2024*. Sampling results and actions taken in response to the results from this period are discussed in the March 22, 2024 and June 6, 2024 Tenant Notification Letters.

Indoor air sampling was performed on November 26, 2024. Trichloroethene (TCE) concentrations ranged 4.23 micrograms per cubic meter (µg/m^3) in the main building space and 12.8 µg/m^3 inside the office, above the NYSDOH Air Guideline Value of 2 µg/m^3, but below the NYSDOH immediate action level of 20 µg/m^3. The samples were collected in a manner consistent with the NYSDOH October 2006 Guidance for Evaluation Soil Vapor Intrusion (including subsequent updates). Sample locations are shown on the attached **Figure 1**, and sample results are shown in the attached **Table 1**.

Langan visited the site on December 11, 2024 and observed both carbon air purifiers to have been turned off. Maintaining operation of both carbon air purifiers located in the office spaces is a requirement of the tenant. Langan will remobilize to the site on December 12, 2024 to inspect the engineering controls, identify potential sources of contamination, and to evaluate what additional soil vapor intrusion mitigation methods may be viable.

Langan will continue to monitor SVI at the site to comply with NYSDEC and NYSDOH requirements.

[1]Environmental Conservation Law 27-2405 requires property owners or owners' agents (such as landlords) to notify all of their tenants and occupants of any test results related to indoor air contamination. The law applies to both residential and non-residential properties. More information regarding the tenant notification law and your obligations can be found at: http://www.dec.ny.gov/regulations/55739.html.

If you have any questions regarding this correspondence, please contact Mike Burke (Langan) at (212) 479-5413. For site-related questions, contact Bill Bennett of NYSDEC at (518) 402-9659 or william.bennett@dec.ny.gov. For exposure and health-related questions, contact Angela Martin of NYSDOH at (518) 473-4671 or BEEI@health.ny.gov.

Sincerely,
Langan Engineering, Environmental, Surveying,
Landscape Architecture and Geology, D.P.C.

Jason Hayes, PE, LEED AP
Principal/Vice President

Enclosures:

Figure 1 – Indoor Air Sample Location Map
Table 1 – Indoor Air Sample Results

cc:

Bill Bennet, Richard Mustico – NYSDEC
Angela Martin – NYSDOH

DRAFT

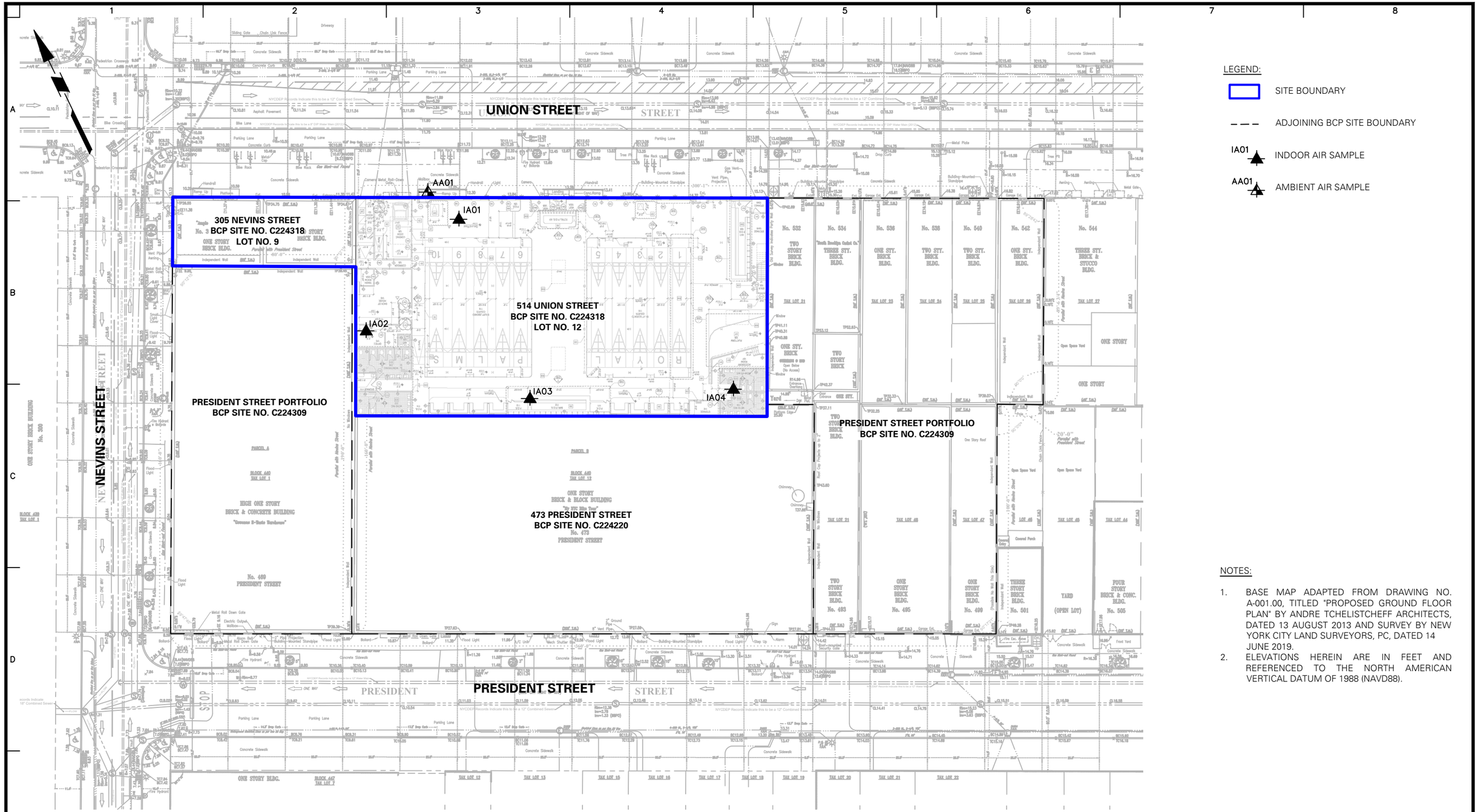

LEGEND:

- SITE BOUNDARY
- ADJOINING BCP SITE BOUNDARY
- IA01 — INDOOR AIR SAMPLE
- AA01 — AMBIENT AIR SAMPLE

NOTES:

1. BASE MAP ADAPTED FROM DRAWING NO. A-001.00, TITLED "PROPOSED GROUND FLOOR PLAN" BY ANDRE TCHELISTCHEFF ARCHITECTS, DATED 13 AUGUST 2013 AND SURVEY BY NEW YORK CITY LAND SURVEYORS, PC, DATED 14 JUNE 2019.
2. ELEVATIONS HEREIN ARE IN FEET AND REFERENCED TO THE NORTH AMERICAN VERTICAL DATUM OF 1988 (NAVD88).

40 0 20 40

SCALE: 1 INCH = 40 FEET

LANGAN

Langan Engineering, Environmental, Surveying, Landscape Architecture and Geology, D.P.C.

360 West 31st Street, 8th Floor
New York, NY 10001

T: 212.479.5400 F: 212.479.5444 www.langan.com

Project	514 UNION STREET
	BLOCK No. 440, LOTS No. 9 and 12
	BROOKLYN
	KINGS NEW YORK
Figure Title	INDOOR AIR SAMPLE LOCATION MAP
Project No.	170361307
Date	03/19/2024
Drawn By	CD
Checked By	VDP
Figure No.	1
Sheet	1 of 1

© 2021 Langan

Filename: \\langan.com\data\NYC\data3\170361301\Cadd Data - 170361301\SheetFiles\Environmental\514 Union Street\Corrective Measures Work Plan\Figure 3 - Indoor Air Sample Location Map.dwg Date: 3/19/2024 Time: 18:52 User: cdevin Style Table: Langan.stb Layout: ANSIB-BL

Table 1
Indoor Air Sample Results

DRAFT

514 Union Street
Brooklyn, New York
NYSDEC BCP Site No.: C224318
Langan Project No.: 170361307

Analyte	CAS Number	NYSDOH AGVs	Location	IA01	IA02	IA03	IA04	AA01
			Sample Name	IA01_112624	IA02_112624	IA03_112624	IA04_112624	AA01_112624
			Sample Date	11/26/2024	11/26/2024	11/26/2024	11/26/2024	11/26/2024
			Sample Type	IA	IA	IA	IA	AA
			Unit	Result	Result	Result	Result	Result
Volatile Organic Compounds								
1,1,1-Trichloroethane	71-55-6	NS	ug/m3	<0.497 U	<0.485 U	<0.477 U	<0.516 U	<0.538 U
1,1-Dichloroethene	75-35-4	NS	ug/m3	<0.180 U	<0.176 U	<0.173 U	<0.187 U	<0.195 U
Carbon Tetrachloride	56-23-5	NS	ug/m3	0.401 D	0.224 D	0.385 D	0.416 D	0.496 D
Cis-1,2-Dichloroethene	156-59-2	NS	ug/m3	<0.180 U	2.610 D	<0.173 U	<0.187 U	<0.195 U
Methylene Chloride	75-09-2	60	ug/m3	<1.900 U	<1.850 U	<1.820 U	<1.970 U	2.190 D
Tetrachloroethene (PCE)	127-18-4	30	ug/m3	<0.617 U	<0.603 U	<0.593 U	<0.641 U	1.140 D
Trichloroethene (TCE)	79-01-6	2	ug/m3	**4.300 D**	**12.800 D**	**4.230 D**	**4.980 D**	0.371 D
Vinyl Chloride	75-01-4	NS	ug/m3	<0.116 U	<0.114 U	<0.112 U	<0.121 U	<0.126 U

Notes:
AA - Ambient Air
IA - Indoor Air
CAS - Chemical Abstract Service
NS - No standard
ug/m3 - microgram per cubic meter
NA - Not analyzed
RL - Reporting limit
<RL - Not detected
Indoor air sample analytical results are compared to the New York State Department of Health (NYSDOH) Air Guideline Values (AGVs) as set forth in the NYSDOH October 2006 Guidance for Evaluating Soil Vapor Intrusion in the State of New York and subsequent updates (through to 2017).
Ambient air sample analytical results are shown for reference only.

Qualifiers:
D - The concentration reported is a result of a diluted sample.
U - The analyte was analyzed for, but was not detected at a level greater than or equal to the level of the RL or the sample concentration for results impacted by blank contamination.

Exceedance Summary:
10 - Result exceeds NYSDOH AGVs

From: Brad Koontz <bkoontz@langan.com>
Sent: Wednesday, December 11, 2024 4:30 PM
To: Mustico, Richard P (DEC) <richard.mustico1@dec.ny.gov>
Cc: Bennett, William B (DEC) <william.bennett@dec.ny.gov>; Martin, Angela L (HEALTH) <Angela.Martin@health.ny.gov>; Jason Hayes <jahayes@Langan.com>; Michael D. Burke <mburke@Langan.com>; Paul McMahon <PMcMahon@Langan.com>; Vinicius De Paula <vdepaula@langan.com>
Subject: 514 Union Street (C224318) Update

Richard,

In accordance with the NYS Department of Environmental Conservation (DEC)-approved Interim Site Management Plan for 514 Union Street prepared by Langan, four indoor air samples were collected inside the building on November 26th, 2024 to determine whether the soil vapor intrusion mitigation system continues to perform as designed. We reviewed the data this morning (December 11th, 2024). Trichloroethene (TCE), a contaminant of concern at the site, was detected in the four indoor air samples at concentrations ranging between 4.23 and 12.8 micrograms per cubic meter ($\mu g/m^3$). These concentrations exceed the NYS Department of Health (DOH) Air Guideline Value (AGV) for TCE of 2 $\mu g/m^3$, but are below the DOH recommended immediate action threshold for TCE of 20 $\mu g/m^3$. The SVI mitigation system was inspected and continues to operate, and the HVAC system observed to be on. The lab report, draft results table, and sample location map are attached.

The chlorinated volatile organic compounds (CVOC) concentrations in indoor air remain lower than the indoor air concentrations identified prior to installation of the SVI mitigation system.

We plan to remobilize to the site this week to inspect the engineering controls, identify potential sources of contamination, and to evaluate what additional soil vapor intrusion mitigation methods may be viable. We will notify you following the inspection with proposed next steps.

Thanks,
Brad

Brad Koontz
Project Engineer

LANGAN

From: Steven Hirschberg <shirschberg@brodsky.com>
Sent: Friday, December 13, 2024 1:56 PM
To: Jonathan Schnapp <jonathan@royalpalmsshuffle.com>
Cc: Vinicius De Paula <vdepaula@langan.com>; Brad Koontz <bkoontz@langan.com>
Subject: [External] 514 Union St

Hi Jonathan. Langan asked that we forward the attachment to you.

Steven Hirschberg
The Brodsky Organization
400 West 59th Street, 3rd Floor
NY, NY 10019
Direct: 212.896.5565
Mobile: 203.536.4431

February 10, 2025

Gowanus President Owner LLC
400 West 59th Street
New York, New York 10019

Re: Indoor Air Sample Results (January 2025)
514 Union Street
Brooklyn, New York
NYSDEC BCP Site No. C224318

Langan Engineering, Environmental, Surveying, Landscape Architecture and Geology, D.P.C. (Langan) prepared this letter to facilitate tenant notification[1] of indoor air sample results collected on January 28, 2025 at 514 Union Street in Brooklyn, New York (the site). Indoor air samples were collected as part of ongoing soil vapor intrusion (SVI) monitoring required by the New York State Department of Environmental Conservation (NYSDEC) and the New York State Department of Health (NYSDOH) due to the presence of volatile organic compounds (VOCs) in groundwater and soil vapor.

Six rounds of indoor air sampling were previously conducted on *December 26, 2023*, *January 12, 2024*, *February 4, 2024*, *March 4, 2024, March 22, 2024, and November 26, 2024.* Sampling results and actions taken in response to the results from this period are discussed in the March 22, 2024, June 6, 2024, and December 12, 2024 Tenant Notification Letters.

Indoor air sampling was performed on January 28, 2025. Trichloroethene (TCE) concentrations ranged between not detected (less than 0.109 micrograms per cubic meter [µg/m^3]) in the main building space and 0.474 µg/m^3 inside the office, below the NYSDOH Air Guideline Value of 2 µg/m^3. The samples were collected in a manner consistent with the NYSDOH October 2006 Guidance for Evaluation Soil Vapor Intrusion (including subsequent updates). Sample locations are shown on the attached **Figure 1**, and sample results are shown in the attached **Table 1**.

Prior to completion of the January 2025 sampling event, new ducts were installed to more efficiently distribute incoming fresh air from the energy recovery ventilators (ERV). Continued operation without adjustment and maintenance of the ERVs is a required obligation of the tenant. Langan will turn off the two air purifiers equipped with activated carbon filters in the office and conduct another round of indoor air sampling in February 2025, in accordance with NYSDEC and NYSDOH requirements.

[1]Environmental Conservation Law 27-2405 requires property owners or owners' agents (such as landlords) to notify all of their tenants and occupants of any test results related to indoor air contamination. The law applies to both residential and non-residential properties. More information regarding the tenant notification law and your obligations can be found at: http://www.dec.ny.gov/regulations/55739.html.

If you have any questions regarding this correspondence, please contact Mike Burke (Langan) at (212) 479-5413. For site-related questions, contact Bill Bennett of NYSDEC at (518) 402-9659 or william.bennett@dec.ny.gov. For exposure and health-related questions, contact Angela Martin of NYSDOH at (518) 473-4671 or BEEI@health.ny.gov.

Sincerely,
Langan Engineering, Environmental, Surveying,
Landscape Architecture and Geology, D.P.C.

Jason Hayes, PE, LEED AP
Principal/Vice President

Enclosures:

Figure 1 – Indoor Air Sample Location Map
Table 1 – Indoor Air Sample Results

cc:

Bill Bennet, Richard Mustico – NYSDEC
Angela Martin – NYSDOH

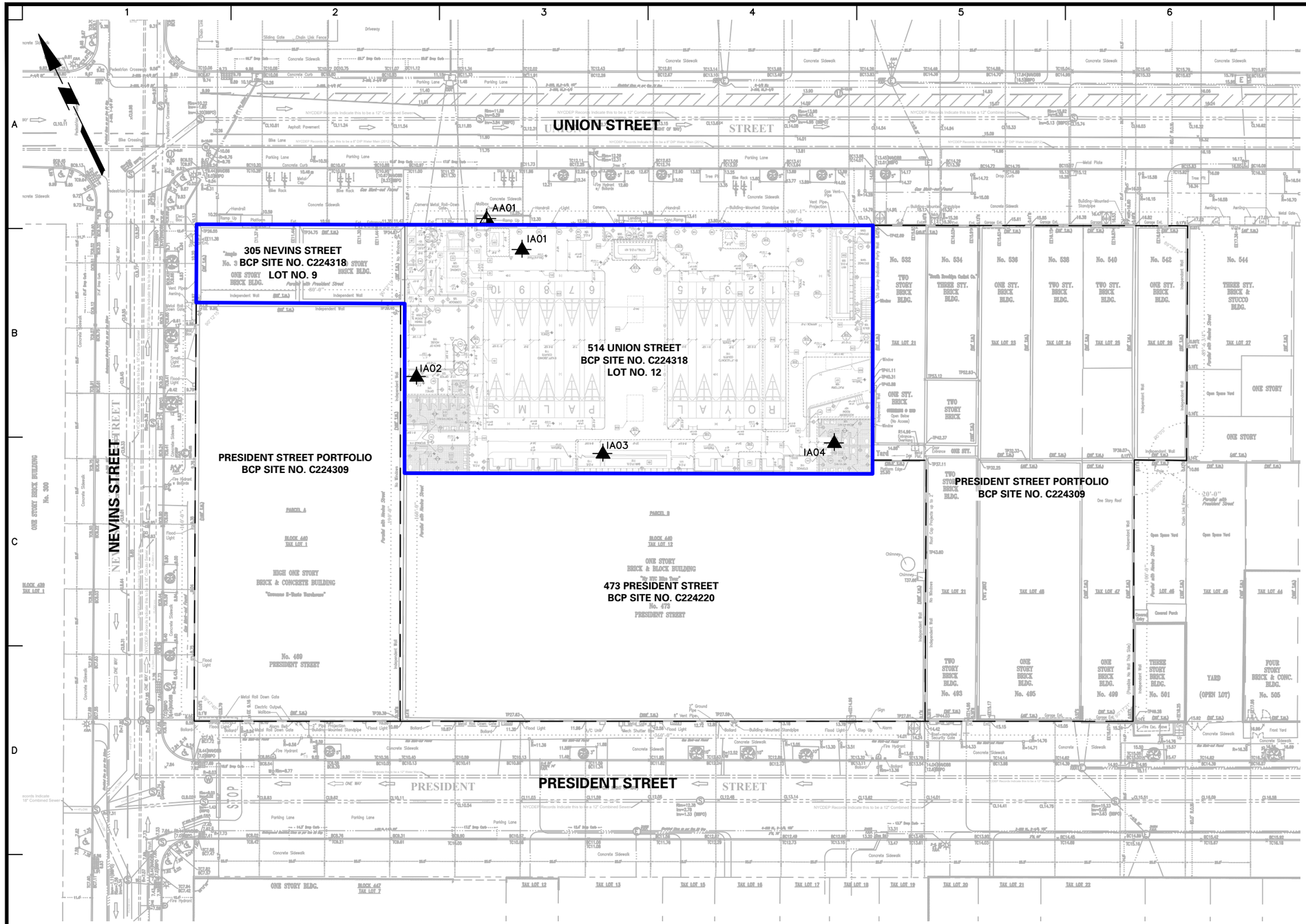
UNION STREET
NEVINS STREET
PRESIDENT STREET
305 NEVINS STREET
BCP SITE NO. C224318
LOT NO. 9
514 UNION STREET
BCP SITE NO. C224318
LOT NO. 12
PRESIDENT STREET PORTFOLIO
BCP SITE NO. C224309
473 PRESIDENT STREET
BCP SITE NO. C224220
No. 473
PRESIDENT STREET
AA01
IA01
IA02
IA03
IA04
No. 532
No. 534
No. 536
No. 538
No. 540
No. 542
No. 544
No. 469
PRESIDENT STREET
No. 493
No. 495
No. 499
No. 501
No. 505
YARD
(OPEN LOT)
BLOCK 440
TAX LOT 1
BLOCK 440
TAX LOT 12
BLOCK 447
TAX LOT 7
HIGH ONE STORY
BRICK & CONCRETE BUILDING
ONE STORY
BRICK & BLOCK BUILDING
ONE STORY BRICK BUILDING
No. 300
ONE STORY BLDG.
PARCEL A
PARCEL B
STOP
Sliding Gate
Chain Link Fence
Concrete Sidewalk
Asphalt Pavement
Bike Crossing
Pedestrian Crossing
Parking Lane
Flood Light
Bollard
Fire Hydrant
Metal Roll Down Gate
Independent Wall
Open Space Yard
Covered Porch
Front Yard
Fire Esc. Above 1
Gangway
Skylight
Chimney
Vent Pipe
Roof Cap Projects up to 2'
Building-Mounted Standpipe
Flood Light
Step Up
Alarm
Sign
Ground Pipe
Gas Shut-off Valve
Gas Shut-off Found
Tree Pit
Tree 5"
Tree 6"
Tree 8"
Tree 10"
Tree 12"
Tree 24"
Tree 30"
Tree 36"
Tree 48"
Tree 60"
Tree 72"
Tree 84"
Tree 96"
Tree 108"
Tree 120"
Tree 132"
Tree 144"
Tree 156"
Tree 168"
Tree 180"
Tree 192"
Tree 204"
Tree 216"
Tree 228"
Tree 240"
Tree 252"
Tree 264"
Tree

Table 1
Indoor Air Sampling
Indoor Air Sample Results

514 Union Street
Brooklyn, New York
NYSDEC BCP Site No.: C224318
Langan Project No.: 170361307

Analyte	CAS Number	NYSDOH AGVs	Location	AA01	IA01	IA02	IA03	IA04
			Sample Name	AA01_012825	IA01_012825	IA02_012825	IA03_012825	IA04_012825
			Sample Date	01/28/2025	01/28/2025	01/28/2025	01/28/2025	01/28/2025
			Sample Type	AA	IA	IA	IA	IA
			Unit	Result	Result	Result	Result	Result
Volatile Organic Compounds								
1,1,1-Trichloroethane	71-55-6	NS	ug/m3	<0.443 U	<0.482 U	<0.481 U	<0.467 U	<0.473 U
1,1-Dichloroethene	75-35-4	NS	ug/m3	<0.161 U	<0.175 U	<0.175 U	<0.17 U	<0.172 U
Carbon Tetrachloride	56-23-5	NS	ug/m3	0.306 D	0.333 D	0.222 D	0.323 D	0.273 D
Cis-1,2-Dichloroethene	156-59-2	NS	ug/m3	<0.161 U	<0.175 U	<0.175 U	<0.17 U	<0.172 U
Methylene Chloride	75-09-2	60	ug/m3	<1.69 U	<1.84 U	<1.84 U	<1.78 U	<1.81 U
Tetrachloroethene (PCE)	127-18-4	30	ug/m3	<0.55 U	<0.599 U	<0.598 U	<0.581 U	<0.588 U
Trichloroethene (TCE)	79-01-6	2	ug/m3	<0.109 U	<0.119 U	0.474 D	<0.115 U	0.14 D
Vinyl Chloride	75-01-4	NS	ug/m3	<0.104 U	<0.113 U	<0.113 U	<0.109 U	<0.111 U

Notes:
AA - Ambient Air
IA - Indoor Air
CAS - Chemical Abstract Service
NS - No standard
ug/m3 - microgram per cubic meter
NA - Not analyzed
RL - Reporting limit
<RL - Not detected
Indoor air sample analytical results are compared to the New York State Department of Health (NYSDOH) Air Guideline Values (AGVs) as set forth in the NYSDOH October 2006 Guidance for Evaluating Soil Vapor Intrusion in the State of New York and subsequent updates (through to 2017).
Ambient air sample analytical results are shown for reference only.

Qualifiers:
D - The concentration reported is a result of a diluted sample.
U - The analyte was analyzed for, but was not detected at a level greater than or equal to the level of the RL or the sample concentration for results impacted by blank contamination.

Exceedance Summary:
10 - Result exceeds NYSDOH AGVs

Brad Koontz

From: Steven Hirschberg <shirschberg@brodsky.com>
Sent: Thursday, February 13, 2025 11:08 AM
To: Brad Koontz
Cc: Vinicius De Paula
Subject: FW: 514 Union Street Indoor Air Results Tenant Notification Letter
Attachments: 2025-02-10 - 514 Union Street - C224318 - Tenant Notification Letter.pdf

Brad. The letter was sent to RP on Monday.

Steven Hirschberg
The Brodsky Organization
400 West 59th Street - 3rd Floor
New York, NY 10019
212.896.5565 (Direct)
203.536.4431 (Mobile)

From: Steven Hirschberg
Sent: Monday, February 10, 2025 4:57 PM
To: jonathan@royalpalmsshuffle.com; Nick Shields <nick@royalpalmsshuffle.com>
Subject: FW: 514 Union Street Indoor Air Results Tenant Notification Letter

J+N: Langan asked that we forward you the attached letter. Thx

Steven Hirschberg
The Brodsky Organization
400 West 59th Street - 3rd Floor
New York, NY 10019
212.896.5565 (Direct)
203.536.4431 (Mobile)

From: Brad Koontz <bkoontz@langan.com>
Sent: Monday, February 10, 2025 4:40 PM
To: Steven Hirschberg <shirschberg@brodsky.com>
Cc: Jason Hayes <jahayes@Langan.com>; Michael D. Burke <mburke@Langan.com>; Paul McMahon <PMcMahon@Langan.com>; Vinicius De Paula <vdepaula@langan.com>; Caroline Devin <Cdevin@langan.com>; Camille Quick <cquick@langan.com>
Subject: 514 Union Street Indoor Air Results Tenant Notification Letter

Brad Koontz

From: Vinicius De Paula
Sent: Thursday, February 13, 2025 11:28 AM
To: Mustico, Richard P (DEC); Martin, Angela L (HEALTH)
Cc: Bennett, William B (DEC); Paul McMahon; Michael D. Burke; Brad Koontz; Caroline Devin
Subject: FW: 514 Union Street Indoor Air Results Tenant Notification Letter
Attachments: 2025-02-10 - 514 Union Street - C224318 - Tenant Notification Letter.pdf

Richard and Angie, the attached tenant notification letter was shared with the 514 Union Street tenant regarding the January 2025 indoor air sample results.

Thanks,
Vinicius

Vinicius De Paula, PE
Senior Project Manager

LANGAN

Direct: 312.547.7730
Mobile: 914.803.7130
File Sharing Link
www.langan.com

ILLINOIS NEW JERSEY NEW YORK CONNECTICUT MASSACHUSETTS PENNSYLVANIA VIRGINIA WASHINGTON, DC OHIO NORTH CAROLINA TENNESSEE FLORIDA TEXAS ARIZONA COLORADO UTAH WASHINGTON CALIFORNIA ATHENS CALGARY DUBAI LONDON PANAMA

From: Steven Hirschberg <shirschberg@brodsky.com>
Sent: Thursday, February 13, 2025 10:08 AM
To: Brad Koontz <bkoontz@langan.com>
Cc: Vinicius De Paula <vdepaula@langan.com>
Subject: FW: 514 Union Street Indoor Air Results Tenant Notification Letter

Brad. The letter was sent to RP on Monday.

Steven Hirschberg
The Brodsky Organization
400 West 59th Street - 3rd Floor
New York, NY 10019
212.896.5565 (Direct)

April 8, 2025

Gowanus President Owner LLC
400 West 59th Street
New York, New York 10019

Re: Indoor Air Sample Results (March 2025)
514 Union Street
Brooklyn, New York
NYSDEC BCP Site No. C224318

Langan Engineering, Environmental, Surveying, Landscape Architecture and Geology, D.P.C. (Langan) prepared this letter to facilitate tenant notification[1] of indoor air sample results collected on March 20, 2025 at 514 Union Street in Brooklyn, New York (the site). Indoor air samples were collected as part of ongoing soil vapor intrusion (SVI) monitoring required by the New York State Department of Environmental Conservation (NYSDEC) and the New York State Department of Health (NYSDOH) due to the presence of volatile organic compounds (VOCs) in groundwater and soil vapor.

Seven rounds of indoor air sampling were previously conducted on *December 26, 2023*, *January 12, 2024*, *February 4, 2024*, *March 4, 2024, March 22, 2024, November 26, 2024, and January 28, 2025.* Sampling results and actions taken in response to the results from this period are discussed in the March 22, 2024, June 6, 2024, December 12, 2024, and February 10, 2025 Tenant Notification Letters.

Indoor air sampling was performed on March 20, 2025. Trichloroethene (TCE) concentrations were not detected in the main building space and inside the office. The non-detect TCE concentrations are below the NYSDOH Air Guideline Values. The samples were collected in a manner consistent with the NYSDOH October 2006 Guidance for Evaluation Soil Vapor Intrusion (including subsequent updates). Sample locations are shown on the attached **Figure 1**, and sample results are shown in the attached **Table 1**.

Prior to the completion of the March 2025 sampling event, communication holes were drilled within the void space below the office to increase influence of the SVI mitigation system in addition to the energy recovery ventilator ducts installed in January 2025. Continued operation and maintenance without adjustment of the ERVs is a required obligation of the tenant. The two air purifiers equipped with activated carbon filters in the office were turned off on

[1]Environmental Conservation Law 27-2405 requires property owners or owners' agents (such as landlords) to notify all of their tenants and occupants of any test results related to indoor air contamination. The law applies to both residential and non-residential properties. More information regarding the tenant notification law and your obligations can be found at: http://www.dec.ny.gov/regulations/55739.html.

March 13, 2025, one week prior to the March 2025 indoor air sampling event, in accordance with NYSDEC and NYSDOH requirements.

If you have any questions regarding this correspondence, please contact Mike Burke (Langan) at (212) 479-5413. For site-related questions, contact Bill Bennett of NYSDEC at (518) 402-9659 or william.bennett@dec.ny.gov. For exposure and health-related questions, contact Angela Martin of NYSDOH at (518) 473-4671 or BEEI@health.ny.gov.

Sincerely,
Langan Engineering, Environmental, Surveying,
Landscape Architecture and Geology, D.P.C.



Jason Hayes, PE, LEED AP
Principal

Enclosures:

Figure 1 – Indoor Air Sample Location Map
Table 1 – Indoor Air Sample Results

cc:

Bill Bennet, Richard Mustico – NYSDEC
Angela Martin – NYSDOH

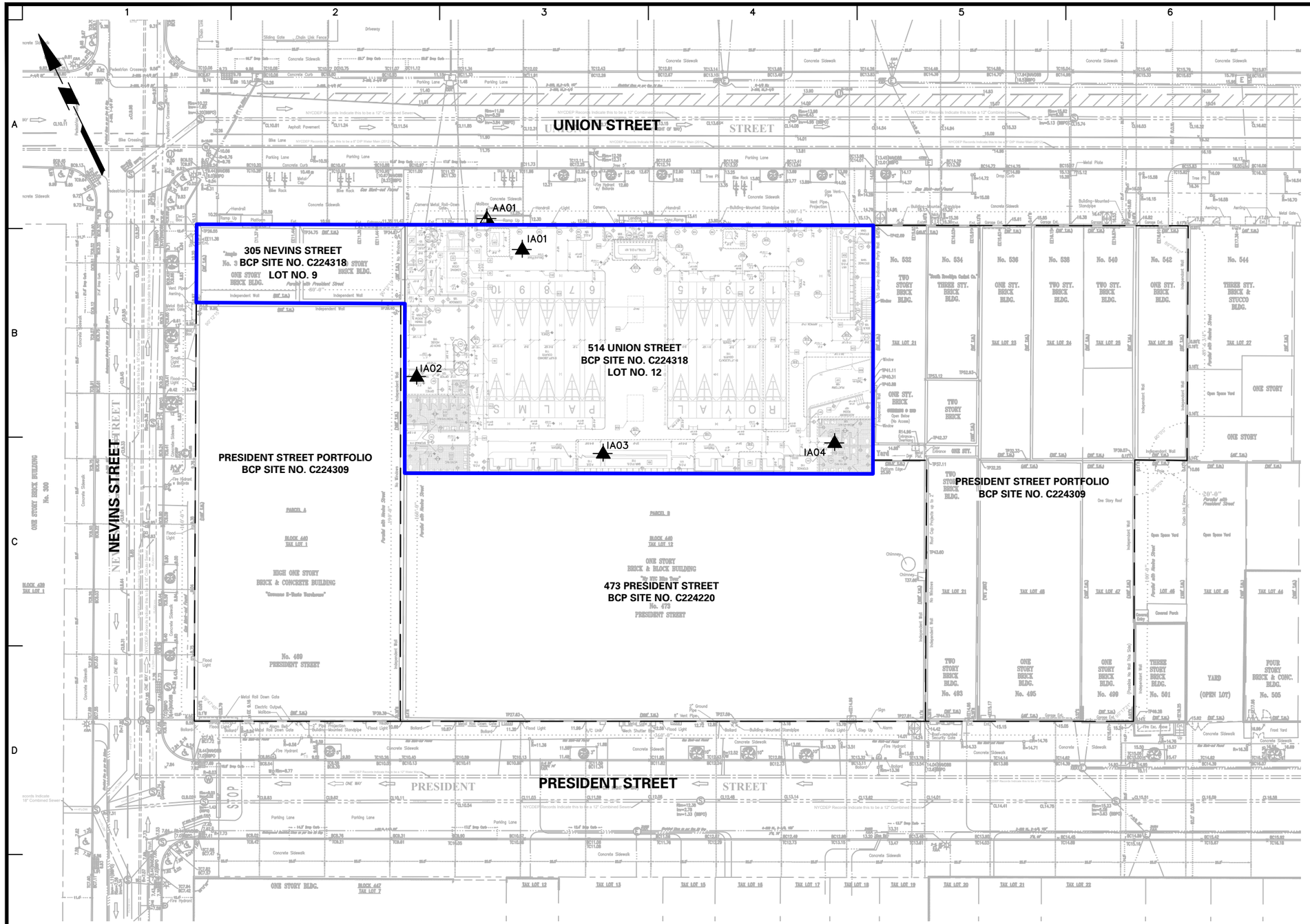

LEGEND:

- SITE BOUNDARY
- ADJOINING BCP SITE BOUNDARY
- IA01 — INDOOR AIR SAMPLE
- AA01 — AMBIENT AIR SAMPLE

NOTES:

1. BASE MAP ADAPTED FROM DRAWING NO. A-001.00, TITLED "PROPOSED GROUND FLOOR PLAN" BY ANDRE TCHELISTCHEFF ARCHITECTS, DATED 13 AUGUST 2013 AND SURVEY BY NEW YORK CITY LAND SURVEYORS, PC, DATED 14 JUNE 2019.
2. ELEVATIONS HEREIN ARE IN FEET AND REFERENCED TO THE NORTH AMERICAN VERTICAL DATUM OF 1988 (NAVD88).

40 0 20 40

SCALE: 1 INCH = 40 FEET

LANGAN

Langan Engineering, Environmental, Surveying, Landscape Architecture and Geology, D.P.C.

360 West 31st Street, 8th Floor
New York, NY 10001

T: 212.479.5400 F: 212.479.5444 www.langan.com

Project	514 UNION STREET
	BLOCK No. 440, LOTS No. 9 and 12
	BROOKLYN
	KINGS NEW YORK
Figure Title	INDOOR AIR SAMPLE LOCATION MAP
Project No.	170361307
Date	03/19/2024
Drawn By	CD
Checked By	VDP
Figure No.	1
Sheet	1 of 1

© 2021 Langan

Filename: \\langan.com\data\NYC\data3\170361301\Cadd Data - 170361301\SheetFiles\Environmental\514 Union Street\Corrective Measures Work Plan\Figure 3 - Indoor Air Sample Location Map.dwg Date: 3/19/2024 Time: 18:52 User: cdevin Style Table: Langan.stb Layout: ANSIB-BL

Table 1
Indoor Air Sampling
Indoor and Ambient Air Sampling Results

514 Union Street
Brooklyn, New York
NYSDEC BCP Site No.: C224318
Langan Project No.: 170361307

Analyte	CAS Number	NYSDOH AGVs	Location	AA01	IA01	IA02	IA03	IA04
			Sample Name	AA01_032025	IA01_032025	IA02_032025	IA03_032025	IA04_032025
			Sample Date	03/20/2025	03/20/2025	03/20/2025	03/20/2025	03/20/2025
			Sample Type	AA	IA	IA	IA	IA
			Unit	Result	Result	Result	Result	Result
Volatile Organic Compounds								
1,1,1-Trichloroethane	71-55-6	NS	ug/m3	<0.46 U	<0.48 U	<0.47 U	<0.49 U	<0.49 U
1,1-Dichloroethene	75-35-4	NS	ug/m3	<0.083 U	<0.086 U	<0.086 U	<0.089 U	<0.089 U
Carbon Tetrachloride	56-23-5	NS	ug/m3	0.37 D	0.44 D	0.38 D	0.4 D	0.45 D
Cis-1,2-Dichloroethene	156-59-2	NS	ug/m3	<0.083 U	<0.086 U	<0.086 U	<0.089 U	<0.089 U
Methylene Chloride	75-09-2	60	ug/m3	<1.7 U	<1.8 U	<1.8 U	<1.9 U	<1.9 U
Tetrachloroethene (PCE)	127-18-4	30	ug/m3	<0.57 U	<0.59 U	<0.59 U	<0.61 U	<0.61 U
Trichloroethene (TCE)	79-01-6	2	ug/m3	<0.11 U	<0.12 U	<0.12 U	<0.12 U	<0.12 U
Vinyl Chloride	75-01-4	NS	ug/m3	<0.11 U	<0.11 U	<0.11 U	<0.12 U	<0.11 U

Notes:
AA - Ambient Air
IA - Indoor Air
CAS - Chemical Abstract Service
NS - No standard
ug/m3 - microgram per cubic meter
NA - Not analyzed
RL - Reporting limit
<RL - Not detected
Indoor air sample analytical results are compared to the New York State Department of Health (NYSDOH) Air Guideline Values (AGVs) as set forth in the NYSDOH October 2006 Guidance for Evaluating Soil Vapor Intrusion in the State of New York and subsequent updates (through to 2017).
Ambient air sample analytical results are shown for reference only.

Qualifiers:
D - The concentration reported is a result of a diluted sample.
U - The analyte was analyzed for, but was not detected at a level greater than or equal to the level of the RL or the sample concentration for results impacted by blank contamination.

Exceedance Summary:
10 - Result exceeds NYSDOH AGVs

From: Vinicius De Paula <vdepaula@langan.com>
Sent: Tuesday, March 25, 2025 12:00 PM
To: Mustico, Richard P (DEC) <richard.mustico1@dec.ny.gov>; Martin, Angela L (HEALTH) <Angela.Martin@health.ny.gov>; Brad Koontz <bkoontz@langan.com>
Cc: Bennett, William B (DEC) <william.bennett@dec.ny.gov>; McLaughlin, Scarlett E (HEALTH) <scarlett.mclaughlin@health.ny.gov>; Kuehner, Wendy S (HEALTH) <wendy.kuehner@health.ny.gov>; Vooris, Christine N (HEALTH) <Christine.Vooris@health.ny.gov>; Deyette, Scott (DEC) <scott.deyette@dec.ny.gov>; pmcmahon@langan.com; mburke@langan.com; jahayes@Langan.com; Caroline Devin <Cdevin@langan.com>
Subject: RE: RECEIVED - Jan 2025 IA sampling results, post Air Sparge startup: 514 Union Street (C224318) - Draft Corrective Measures Work Plan #2

ATTENTION: This email came from an external source. Do not open attachments or click on links from unknown senders or unexpected emails.

Richard,

We received lab results for last week's indoor air sampling event at 514 Union Street. TCE was not detected in the four indoor air samples. We are validating the results and will provide another update once that is complete. Attached are the lab report and the unvalidated raw data from the lab in an Excel file. The sample locations are the same as previous events.

Thanks,
Vinicius

Vinicius De Paula, PE
Senior Project Manager

LANGAN

Direct: 312.547.7730
Mobile: 914.803.7130
File Sharing Link
www.langan.com

Technical Excellence ● Practical Experience ● Client Responsiveness

ILLINOIS NEW JERSEY NEW YORK CONNECTICUT MASSACHUSETTS PENNSYLVANIA VIRGINIA WASHINGTON, DC
OHIO NORTH CAROLINA TENNESSEE FLORIDA TEXAS ARIZONA COLORADO UTAH WASHINGTON OREGON NEVADA CALIFORNIA
ATHENS CALGARY DUBAI LONDON PANAMA

From: Vinicius De Paula
Sent: Friday, March 21, 2025 7:28 AM
To: Mustico, Richard P (DEC) <richard.mustico1@dec.ny.gov>; Martin, Angela L (HEALTH) <Angela.Martin@health.ny.gov>; Brad Koontz <bkoontz@langan.com>
Cc: Bennett, William B (DEC) <william.bennett@dec.ny.gov>; McLaughlin, Scarlett E (HEALTH) <scarlett.mclaughlin@health.ny.gov>; Kuehner, Wendy S (HEALTH) <wendy.kuehner@health.ny.gov>; Vooris, Christine N (HEALTH) <Christine.Vooris@health.ny.gov>; Deyette, Scott (DEC) <scott.deyette@dec.ny.gov>; Paul McMahon <PMcMahon@Langan.com>; Michael D. Burke <mburke@Langan.com>; Jason Hayes <jahayes@Langan.com>; Caroline Devin <Cdevin@langan.com>
Subject: RE: RECEIVED - Jan 2025 IA sampling results, post Air Sparge startup: 514 Union Street (C224318) - Draft Corrective Measures Work Plan #2

Brad Koontz

From: Steven Hirschberg <shirschberg@brodsky.com>
Sent: Wednesday, April 9, 2025 8:27 AM
To: jonathan@royalpalmsshuffle.com; Nick Shields
Cc: Brad Koontz
Subject: FW: 514 Union Street Indoor Air Results Tenant Notification Letter
Attachments: 2025-04-08 - 514 Union Street - C224318 - Tenant Notification Letter.pdf

Follow Up Flag: Follow up
Flag Status: Flagged

Good morning. Langan asked that we forward the attached letter to you.

Steven Hirschberg
The Brodsky Organization
400 West 59th Street - 3rd Floor
New York, NY 10019
212.896.5565 (Direct)
203.536.4431 (Mobile)

From: Brad Koontz <bkoontz@langan.com>
Sent: Tuesday, April 8, 2025 5:19 PM
To: Steven Hirschberg <shirschberg@brodsky.com>
Cc: Jason Hayes <jahayes@Langan.com>; Michael D. Burke <mburke@Langan.com>; Paul McMahon <PMcMahon@Langan.com>; Vinicius De Paula <vdepaula@langan.com>; Caroline Devin <Cdevin@langan.com>
Subject: 514 Union Street Indoor Air Results Tenant Notification Letter

Steve,

The Tenant Notification Letter documenting the 3/20/25 indoor air sampling at 514 Union Street is attached. Please send to Jonathan and Nick and forward us that correspondence for our record.

Thanks,
Brad

Brad Koontz, EIT
Project Engineer

LANGAN

Direct: 212.479.5499 x5625
Mobile: 609.775.8109
File Sharing Link

ATTACHMENT C

SVI MITIGATION SYSTEM INSPECTION FORMS

SYSTEM INSPECTION FORM

PROJECT: 514 Union Street	**PROJECT NO.:** 170361307
LOCATION: Brooklyn, New York	
INSPECTOR(s): Caroline Devin	**DATE:** 11/26/2024
REASON FOR INSPECTION (I.E., QUARTERLY, NON-ROUTINE): Semi-Annual Routine Inspection	
DATE OF LAST INSPECTION AND OUTSTANDING ITEMS: 5/16/2024 (Non-Routine Inspection)	
CURRENT SITE CONDITIONS: Space is occupied by Royal Palms Shuffleboard Club	
WEATHER CONDITIONS: Temperature: 43 F Wind Speed and Direction: SE 8 mph Precipitation: 0.2 in last 24 hours Pressure: 29.91" Hg	

A. SVI MITIGATION SYSTEM

	Yes	No	Is the Condition Normal?	Remarks
Is the blower skid in operation and exhausting air at the discharge point?	X		Yes	ppbRAE = 225 ppb at the discharge point ; The blower vacuum gauge is reading 5 IWC
Does all visible SVI Mitigation system piping appear intact and undamaged?	X		Yes	
Does the inlet filter at the blower skid need replacement?	X		No	
Is there any evidence of moisture within the SVI mitigation system components?		X	Yes	
Was the blower skid alarm successfully triggered?			N/A	
Have any air intake point been installed within 10 feet of a discharge point?		X	Yes	

B. VENTILATION POINTS

Ventilation Point	Flow (CFM)	Differential Pressure (IWC)	PID Reading (ppb)	Smoke Entering
VP-01	33.14	-0.044	154	Pass
VP-02	33.21	-0.045	202	Pass
VP-03	30.87	-0.037	113	Pass
VP-04	30.21	-0.044	220	Pass

C. BUILDING SLAB

	Yes	No	Is the Condition Normal?	Remarks
Are there any indications of a breach in the finished floor?		X	Yes	
Are there any cracks in the finished floor?	X		Yes	Exisitng cracks in the floor were smoke tested and determined to be surficial.
Is there any indication of construction activity since the last inspection that included breaching of the finished floor?		X	Yes	

D. ADDITIONAL REMARKS

CFM = Cubic feet per minute
SVI = Soil vapor intrusion
PID = Photoionization detector
ppb = Parts per billion
IWC = Inches of water column

SYSTEM INSPECTION FORM

PROJECT: 514 Union Street	**PROJECT NO.:** 170361307
LOCATION: Brooklyn, New York	
INSPECTOR(s): Caroline Devin	**DATE:** 3/20/2025
REASON FOR INSPECTION (I.E., QUARTERLY, NON-ROUTINE): Non-Routine Inspection	
DATE OF LAST INSPECTION AND OUTSTANDING ITEMS: 11/26/2024 (Semi-Annual Routine Inspection)	
CURRENT SITE CONDITIONS: Space is occupied by Royal Palms Shuffleboard Club	
WEATHER CONDITIONS: Temperature: 43 F Wind Speed and Direction: SE 8 mph Precipitation: 0.2 in last 24 hours Pressure: 29.91" Hg	

A. SVI MITIGATION SYSTEM

	Yes	No	Is the Condition Normal?	Remarks
Is the blower skid in operation and exhausting air at the discharge point?	X		Yes	
Does all visible SVI Mitigation system piping appear intact and undamaged?	X		Yes	
Does the inlet filter at the blower skid need replacement?	X		No	
Is there any evidence of moisture within the SVI mitigation system components?		X	Yes	
Was the blower skid alarm successfully triggered?			N/A	
Have any air intake point been installed within 10 feet of a discharge point?		X	Yes	

B. VENTILATION POINTS

Ventilation Point	Flow (CFM)	Differential Pressure (IWC)	PID Reading (ppb)	Smoke Entering
VP-01	32.7	-0.014	154	Pass
VP-02	28.17	-0.017	144	Pass
VP-03	21.06	-0.005	132	Pass
VP-04	29.73	-0.044	187	Pass

C. BUILDING SLAB

	Yes	No	Is the Condition Normal?	Remarks
Are there any indications of a breach in the finished floor?		X	Yes	
Are there any cracks in the finished floor?			Yes	Exisitng cracks in the floor were smoke tested and determined to be surficial.
Is there any indication of construction activity since the last inspection that included breaching of the finished floor?		X	Yes	

D. ADDITIONAL REMARKS

CFM = Cubic feet per minute
SVI = Soil vapor intrusion
PID = Photoionization detector
ppb = Parts per billion
IWC = Inches of water column

ATTACHMENT D

INDOOR AIR SAMPLING LOGS

AIR SAMPLING LOG SHEET

Sample Number: AA01_112624

PROJECT: 514 Union Street	**PROJECT NO.:** 170361307		
LOCATION: Brooklyn, NY	**SURFACE ELEVATION AND DATUM:** N/A		
SAMPLER: Caroline Devin	**SAMPLE DATE STARTED:** 11/26/2024	**DATE FINISHED:** 11/26/2024	
INSPECTOR: Caroline Devin	**TYPE OF SAMPLING DEVICE:** 6-Liter Summa Canister		
POTENTIAL SAMPLE INTERFERENCES: None	**WEATHER CONDITIONS (PRECIP., TEMP., PRESS., WIND SPEED AND DIR.):**		
	Temp:	48 deg F	
	Wind:	SE @5mph	
	Precipitation:	0.0 in last 24 hours	
	Pressure:	29.96 inHg	

METHOD OF INSTALLATION AND SAMPLING:

Langan field screened the sample location with a ppbRAE 3000 photoionization detector prior to sampling. Sample consisted of 6L Summa canister fitted with an 8-hour flow control valve. The valve was opened to initiate the 8-hour sample collection. The sample and flow controller were checked each hour during sampling to ensure proper operation.

SAMPLE DETAILS

HEIGHT ABOVE GROUND (FT):	4
PID BEFORE SAMPLE (PPB):	0.0
SAMPLE START TIME:	0:12
SAMPLE STOP TIME:	8:14
TOTAL SAMPLE TIME (MIN):	482
REGULATOR FLOW RATE (L/MIN):	9.41
VOLUME OF SAMPLE (LITERS):	4.54
PID AFTER SAMPLE (PPB):	0.2
SAMPLE MOISTURE CONTENT:	N/A
CAN SERIAL NUMBER:	37386
REGULATOR SERIAL NUMBER:	20442
CAN START VACUUM PRESS. (" HG):	-30
CAN STOP VACUUM PRESS. (" HG):	-10

SAMPLE LOCATION SKETCH

See Sample Location Plan

NOTES

Langan Engineering, Environmental, Surveying, Landscape Architecture, and Geology D.P.C.
21 Penn Plaza, 360 West 31st Street, 8th Floor, New York, New York 10001-2727

AIR SAMPLING LOG SHEET

Sample Number: IA01_112624

PROJECT: 514 Union Street	**PROJECT NO.:** 170361307		
LOCATION: Brooklyn, NY	**SURFACE ELEVATION AND DATUM:** N/A		
SAMPLER: Caroline Devin	**SAMPLE DATE STARTED:** 11/26/2024	**DATE FINISHED:** 11/26/2024	
INSPECTOR: Caroline Devin	**TYPE OF SAMPLING DEVICE:** 6-Liter Summa Canister		
POTENTIAL SAMPLE INTERFERENCES: None	**WEATHER CONDITIONS (PRECIP., TEMP., PRESS., WIND SPEED AND DIR.):**		
	Temp:	48 deg F	
	Wind:	SE @5mph	
	Precipitation:	0.0 in last 24 hours	
	Pressure:	29.96 inHg	

METHOD OF INSTALLATION AND SAMPLING:

Langan field screened the sample location with a ppbRAE 3000 photoionization detector prior to sampling. Sample consisted of 6L Summa canister fitted with an 8-hour flow control valve. The valve was opened to initiate the 8-hour sample collection. The sample and flow controller were checked each hour during sampling to ensure proper operation.

SAMPLE DETAILS

HEIGHT ABOVE GROUND (FT):	4
PID BEFORE SAMPLE (PPB):	140.0
SAMPLE START TIME:	0:12
SAMPLE STOP TIME:	8:15
TOTAL SAMPLE TIME (MIN):	483
REGULATOR FLOW RATE (L/MIN):	10.78
VOLUME OF SAMPLE (LITERS):	5.21
PID AFTER SAMPLE (PPB):	104.0
SAMPLE MOISTURE CONTENT:	N/A
CAN SERIAL NUMBER:	22080
REGULATOR SERIAL NUMBER:	17179
CAN START VACUUM PRESS. (" HG):	-30
CAN STOP VACUUM PRESS. (" HG):	-7

SAMPLE LOCATION SKETCH

See Sample Location Plan

NOTES

Langan Engineering, Environmental, Surveying, Landscape Architecture, and Geology D.P.C.
21 Penn Plaza, 360 West 31st Street, 8th Floor, New York, New York 10001-2727

AIR SAMPLING LOG SHEET

Sample Number: IA02_112624

PROJECT: 514 Union Street	**PROJECT NO.:** 170361307		
LOCATION: Brooklyn, NY	**SURFACE ELEVATION AND DATUM:** N/A		
SAMPLER: Caroline Devin	**SAMPLE DATE STARTED:** 11/26/2024	**DATE FINISHED:** 11/26/2024	
INSPECTOR: Caroline Devin	**TYPE OF SAMPLING DEVICE:** 6-Liter Summa Canister		
POTENTIAL SAMPLE INTERFERENCES: None	**WEATHER CONDITIONS (PRECIP., TEMP., PRESS., WIND SPEED AND DIR.):**		
	Temp:	48 deg F	
	Wind:	SE @5mph	
	Precipitation:	0.0 in last 24 hours	
	Pressure:	29.96 inHg	

METHOD OF INSTALLATION AND SAMPLING:

Langan field screened the sample location with a ppbRAE 3000 photoionization detector prior to sampling. Sample consisted of 6L Summa canister fitted with an 8-hour flow control valve. The valve was opened to initiate the 8-hour sample collection. The sample and flow controller were checked each hour during sampling to ensure proper operation.

SAMPLE DETAILS

HEIGHT ABOVE GROUND (FT):	4
PID BEFORE SAMPLE (PPB):	241.0
SAMPLE START TIME:	0:13
SAMPLE STOP TIME:	8:16
TOTAL SAMPLE TIME (MIN):	483
REGULATOR FLOW RATE (L/MIN):	10.03
VOLUME OF SAMPLE (LITERS):	4.84
PID AFTER SAMPLE (PPB):	256.0
SAMPLE MOISTURE CONTENT:	N/A
CAN SERIAL NUMBER:	49978
REGULATOR SERIAL NUMBER:	17988
CAN START VACUUM PRESS. (" HG):	-30
CAN STOP VACUUM PRESS. (" HG):	-6

SAMPLE LOCATION SKETCH

See Sample Location Plan

NOTES

Vaccuum pressure dropped rapidly in half hour span (4:35 AM - 5:05 AM)

Langan Engineering, Environmental, Surveying, Landscape Architecture, and Geology D.P.C.
21 Penn Plaza, 360 West 31st Street, 8th Floor, New York, New York 10001-2727

AIR SAMPLING LOG SHEET

Sample Number: IA03_112624

PROJECT: 514 Union Street	**PROJECT NO.:** 170361307		
LOCATION: Brooklyn, NY	**SURFACE ELEVATION AND DATUM:** N/A		
SAMPLER: Caroline Devin	**SAMPLE DATE STARTED:** 11/26/2024	**DATE FINISHED:** 11/26/2024	
INSPECTOR: Caroline Devin	**TYPE OF SAMPLING DEVICE:** 6-Liter Summa Canister		
POTENTIAL SAMPLE INTERFERENCES: None	**WEATHER CONDITIONS (PRECIP., TEMP., PRESS., WIND SPEED AND DIR.):**		
	Temp:	48 deg F	
	Wind:	SE @5mph	
	Precipitation:	0.0 in last 24 hours	
	Pressure:	29.96 inHg	

METHOD OF INSTALLATION AND SAMPLING:

Langan field screened the sample location with a ppbRAE 3000 photoionization detector prior to sampling. Sample consisted of 6L Summa canister fitted with an 8-hour flow control valve. The valve was opened to initiate the 8-hour sample collection. The sample and flow controller were checked each hour during sampling to ensure proper operation.

SAMPLE DETAILS

HEIGHT ABOVE GROUND (FT):	4
PID BEFORE SAMPLE (PPB):	160.0
SAMPLE START TIME:	0:14
SAMPLE STOP TIME:	8:17
TOTAL SAMPLE TIME (MIN):	483
REGULATOR FLOW RATE (L/MIN):	11.01
VOLUME OF SAMPLE (LITERS):	5.32
PID AFTER SAMPLE (PPB):	77.0
SAMPLE MOISTURE CONTENT:	N/A
CAN SERIAL NUMBER:	49582
REGULATOR SERIAL NUMBER:	20239
CAN START VACUUM PRESS. (" HG):	-29
CAN STOP VACUUM PRESS. (" HG):	-6

SAMPLE LOCATION SKETCH

See Sample Location Plan

NOTES

Langan Engineering, Environmental, Surveying, Landscape Architecture, and Geology D.P.C.
21 Penn Plaza, 360 West 31st Street, 8th Floor, New York, New York 10001-2727

AIR SAMPLING LOG SHEET

Sample Number: IA04_112624

PROJECT: 514 Union Street	**PROJECT NO.:** 170361307		
LOCATION: Brooklyn, NY	**SURFACE ELEVATION AND DATUM:** N/A		
SAMPLER: Caroline Devin	**SAMPLE DATE STARTED:** 11/26/2024	**DATE FINISHED:** 11/26/2024	
INSPECTOR: Caroline Devin	**TYPE OF SAMPLING DEVICE:** 6-Liter Summa Canister		
POTENTIAL SAMPLE INTERFERENCES: None	**WEATHER CONDITIONS (PRECIP., TEMP., PRESS., WIND SPEED AND DIR.):**		
	Temp:	48 deg F	
	Wind:	SE @5mph	
	Precipitation:	0.0 in last 24 hours	
	Pressure:	29.96 inHg	

METHOD OF INSTALLATION AND SAMPLING:

Langan field screened the sample location with a ppbRAE 3000 photoionization detector prior to sampling. Sample consisted of 6L Summa canister fitted with an 8-hour flow control valve. The valve was opened to initiate the 8-hour sample collection. The sample and flow controller were checked each hour during sampling to ensure proper operation.

SAMPLE DETAILS

HEIGHT ABOVE GROUND (FT):	4
PID BEFORE SAMPLE (PPB):	143.0
SAMPLE START TIME:	0:15
SAMPLE STOP TIME:	8:17
TOTAL SAMPLE TIME (MIN):	482
REGULATOR FLOW RATE (L/MIN):	10.21
VOLUME OF SAMPLE (LITERS):	4.92
PID AFTER SAMPLE (PPB):	89.0
SAMPLE MOISTURE CONTENT:	N/A
CAN SERIAL NUMBER:	16956
REGULATOR SERIAL NUMBER:	19392
CAN START VACUUM PRESS. (" HG):	-30
CAN STOP VACUUM PRESS. (" HG):	-9

SAMPLE LOCATION SKETCH

See Sample Location Plan

NOTES

Langan Engineering, Environmental, Surveying, Landscape Architecture, and Geology D.P.C.
21 Penn Plaza, 360 West 31st Street, 8th Floor, New York, New York 10001-2727

AIR SAMPLING LOG SHEET

Sample Number: EA01_122324

PROJECT: 514 Union Street	**PROJECT NO.:** 170361307		
LOCATION: Brooklyn, NY	**SURFACE ELEVATION AND DATUM:** N/A		
SAMPLER: Caroline Devin	**SAMPLE DATE STARTED:** 12/23/2024	**DATE FINISHED:** 12/23/2024	
INSPECTOR: Caroline Devin	**TYPE OF SAMPLING DEVICE:** 6-Liter Summa Canister		
POTENTIAL SAMPLE INTERFERENCES: None	**WEATHER CONDITIONS (PRECIP., TEMP., PRESS., WIND SPEED AND DIR.):**		
	Temp:	19 deg F	
	Wind:	0mph	
	Precipitation:	0.0 in last 24 hours	
	Pressure:	30.66 inHg	

METHOD OF INSTALLATION AND SAMPLING:

Langan field screened the sample location with a ppbRAE 3000 photoionization detector and connected 3/16-inch ID x 3/8-inch OD silicone tubing to the canister and inserted it approximately 2 inches into the drain prior to sampling. Sample consisted of 6L Summa canister fitted with an 2-hour flow control valve. The valve was opened to initiate the 2-hour sample collection. The sample and flow controller were checked periodically during sampling to ensure proper operation.

SAMPLE DETAILS

HEIGHT ABOVE GROUND (FT):	N/A
PID BEFORE SAMPLE (PPB):	0.0
SAMPLE START TIME:	13:01
SAMPLE STOP TIME:	13:17
TOTAL SAMPLE TIME (MIN):	16
REGULATOR FLOW RATE (L/MIN):	0.347
VOLUME OF SAMPLE (LITERS):	5.55
PID AFTER SAMPLE (PPB):	NM
SAMPLE MOISTURE CONTENT:	N/A
CAN SERIAL NUMBER:	48292
REGULATOR SERIAL NUMBER:	21031
CAN START VACUUM PRESS. (" HG):	-28
CAN STOP VACUUM PRESS. (" HG):	-4

SAMPLE LOCATION SKETCH

See Sample Location Plan

NOTES

NM - Not Measured

Langan Engineering, Environmental, Surveying, Landscape Architecture, and Geology D.P.C.
21 Penn Plaza, 360 West 31st Street, 8th Floor, New York, New York 10001-2727

AIR SAMPLING LOG SHEET

Sample Number: FD01_122324

PROJECT: 514 Union Street		**PROJECT NO.:** 170361307	
LOCATION: Brooklyn, NY		**SURFACE ELEVATION AND DATUM:** N/A	
SAMPLER: Caroline Devin		**SAMPLE DATE STARTED:** 12/23/2024	**DATE FINISHED:** 12/23/2024
INSPECTOR: Caroline Devin		**TYPE OF SAMPLING DEVICE:** 6-Liter Summa Canister	
POTENTIAL SAMPLE INTERFERENCES: None		**WEATHER CONDITIONS (PRECIP., TEMP., PRESS., WIND SPEED AND DIR.):**	
		Temp:	19 deg F
		Wind:	0mph
		Precipitation:	0.0 in last 24 hours
		Pressure:	30.66 inHg

METHOD OF INSTALLATION AND SAMPLING:

Langan field screened the sample location with a ppbRAE 3000 photoionization detector and connected 3/16-inch ID x 3/8-inch OD silicone tubing to the canister and inserted it approximately 2 inches into the drain prior to sampling. Sample consisted of 6L Summa canister fitted with an 2-hour flow control valve. The valve was opened to initiate the 2-hour sample collection. The sample and flow controller were checked periodically during sampling to ensure proper operation.

SAMPLE DETAILS	
HEIGHT ABOVE GROUND (FT):	N/A
PID BEFORE SAMPLE (PPB):	105.0
SAMPLE START TIME:	10:01
SAMPLE STOP TIME:	12:00
TOTAL SAMPLE TIME (MIN):	119
REGULATOR FLOW RATE (L/MIN):	0.04
VOLUME OF SAMPLE (LITERS):	5.12
PID AFTER SAMPLE (PPB):	NM
SAMPLE MOISTURE CONTENT:	N/A
CAN SERIAL NUMBER:	24108
REGULATOR SERIAL NUMBER:	20410
CAN START VACUUM PRESS. (" HG):	-30
CAN STOP VACUUM PRESS. (" HG):	-5

SAMPLE LOCATION SKETCH

See Sample Location Plan

NOTES

NM - Not Measured

Langan Engineering, Environmental, Surveying, Landscape Architecture, and Geology D.P.C.
21 Penn Plaza, 360 West 31st Street, 8th Floor, New York, New York 10001-2727

AIR SAMPLING LOG SHEET

Sample Number: FD02_122324

PROJECT: 514 Union Street		**PROJECT NO.:** 170361307	
LOCATION: Brooklyn, NY		**SURFACE ELEVATION AND DATUM:** N/A	
SAMPLER: Caroline Devin		**SAMPLE DATE STARTED:** 12/23/2024	**DATE FINISHED:** 12/23/2024
INSPECTOR: Caroline Devin		**TYPE OF SAMPLING DEVICE:** 6-Liter Summa Canister	
POTENTIAL SAMPLE INTERFERENCES: None		**WEATHER CONDITIONS (PRECIP., TEMP., PRESS., WIND SPEED AND DIR.):**	
		Temp:	19 deg F
		Wind:	0mph
		Precipitation:	0.0 in last 24 hours
		Pressure:	30.66 inHg

METHOD OF INSTALLATION AND SAMPLING:

Langan field screened the sample location with a ppbRAE 3000 photoionization detector and connected 3/16-inch ID x 3/8-inch OD silicone tubing to the canister and inserted it approximately 2 inches into the drain prior to sampling. Sample consisted of 6L Summa canister fitted with an 2-hour flow control valve. The valve was opened to initiate the 2-hour sample collection. The sample and flow controller were checked periodically during sampling to ensure proper operation.

SAMPLE DETAILS

HEIGHT ABOVE GROUND (FT):	N/A
PID BEFORE SAMPLE (PPB):	1558.0
SAMPLE START TIME:	10:04
SAMPLE STOP TIME:	12:01
TOTAL SAMPLE TIME (MIN):	117
REGULATOR FLOW RATE (L/MIN):	0.04
VOLUME OF SAMPLE (LITERS):	5.03
PID AFTER SAMPLE (PPB):	NM
SAMPLE MOISTURE CONTENT:	N/A
CAN SERIAL NUMBER:	49574
REGULATOR SERIAL NUMBER:	21016
CAN START VACUUM PRESS. (" HG):	-30
CAN STOP VACUUM PRESS. (" HG):	-6

SAMPLE LOCATION SKETCH

See Sample Location Plan

NOTES

NM - Not Measured

Langan Engineering, Environmental, Surveying, Landscape Architecture, and Geology D.P.C.
21 Penn Plaza, 360 West 31st Street, 8th Floor, New York, New York 10001-2727

AIR SAMPLING LOG SHEET

Sample Number: FD03_122324

PROJECT: 514 Union Street		**PROJECT NO.:** 170361307	
LOCATION: Brooklyn, NY		**SURFACE ELEVATION AND DATUM:** N/A	
SAMPLER: Caroline Devin		**SAMPLE DATE STARTED:** 12/23/2024	**DATE FINISHED:** 12/23/2024
INSPECTOR: Caroline Devin		**TYPE OF SAMPLING DEVICE:** 6-Liter Summa Canister	
POTENTIAL SAMPLE INTERFERENCES: None		**WEATHER CONDITIONS (PRECIP., TEMP., PRESS., WIND SPEED AND DIR.):**	
		Temp:	19 deg F
		Wind:	0mph
		Precipitation:	0.0 in last 24 hours
		Pressure:	30.66 inHg

METHOD OF INSTALLATION AND SAMPLING:

Langan field screened the sample location with a ppbRAE 3000 photoionization detector and connected 3/16-inch ID x 3/8-inch OD silicone tubing to the canister and inserted it approximately 2 inches into the drain prior to sampling. Sample consisted of 6L Summa canister fitted with an 2-hour flow control valve. The valve was opened to initiate the 2-hour sample collection. The sample and flow controller were checked periodically during sampling to ensure proper operation.

SAMPLE DETAILS		SAMPLE LOCATION SKETCH
HEIGHT ABOVE GROUND (FT):	N/A	**See Sample Location Plan**
PID BEFORE SAMPLE (PPB):	129.0	
SAMPLE START TIME:	10:07	
SAMPLE STOP TIME:	12:02	
TOTAL SAMPLE TIME (MIN):	115	
REGULATOR FLOW RATE (L/MIN):	0.04	
VOLUME OF SAMPLE (LITERS):	4.95	
PID AFTER SAMPLE (PPB):	NM	
SAMPLE MOISTURE CONTENT:	N/A	
CAN SERIAL NUMBER:	49982	
REGULATOR SERIAL NUMBER:	20446	
CAN START VACUUM PRESS. (" HG):	-30	
CAN STOP VACUUM PRESS. (" HG):	-5	

NOTES

NM - Not Measured

Langan Engineering, Environmental, Surveying, Landscape Architecture, and Geology D.P.C.
21 Penn Plaza, 360 West 31st Street, 8th Floor, New York, New York 10001-2727

AIR SAMPLING LOG SHEET

Sample Number: FD04_122324

PROJECT: 514 Union Street	**PROJECT NO.:** 170361307		
LOCATION: Brooklyn, NY	**SURFACE ELEVATION AND DATUM:** N/A		
SAMPLER: Caroline Devin	**SAMPLE DATE STARTED:** 12/23/2024	**DATE FINISHED:** 12/23/2024	
INSPECTOR: Caroline Devin	**TYPE OF SAMPLING DEVICE:** 6-Liter Summa Canister		
POTENTIAL SAMPLE INTERFERENCES: None	**WEATHER CONDITIONS (PRECIP., TEMP., PRESS., WIND SPEED AND DIR.):**		
	Temp:	19 deg F	
	Wind:	0mph	
	Precipitation:	0.0 in last 24 hours	
	Pressure:	30.66 inHg	

METHOD OF INSTALLATION AND SAMPLING:

Langan field screened the sample location with a ppbRAE 3000 photoionization detector and connected 3/16-inch ID x 3/8-inch OD silicone tubing to the canister and inserted it approximately 2 inches into the drain prior to sampling. Sample consisted of 6L Summa canister fitted with an 2-hour flow control valve. The valve was opened to initiate the 2-hour sample collection. The sample and flow controller were checked periodically during sampling to ensure proper operation.

SAMPLE DETAILS		SAMPLE LOCATION SKETCH
HEIGHT ABOVE GROUND (FT):	N/A	**See Sample Location Plan**
PID BEFORE SAMPLE (PPB):	173.0	
SAMPLE START TIME:	10:12	
SAMPLE STOP TIME:	12:05	
TOTAL SAMPLE TIME (MIN):	113	
REGULATOR FLOW RATE (L/MIN):	0.04	
VOLUME OF SAMPLE (LITERS):	4.86	
PID AFTER SAMPLE (PPB):	NM	
SAMPLE MOISTURE CONTENT:	N/A	
CAN SERIAL NUMBER:	20754	
REGULATOR SERIAL NUMBER:	20234	
CAN START VACUUM PRESS. (" HG):	-30	
CAN STOP VACUUM PRESS. (" HG):	-5	

NOTES

NM - Not Measured

Langan Engineering, Environmental, Surveying, Landscape Architecture, and Geology D.P.C.
21 Penn Plaza, 360 West 31st Street, 8th Floor, New York, New York 10001-2727

AIR SAMPLING LOG SHEET

Sample Number: FD05_122324

PROJECT: 514 Union Street	**PROJECT NO.:** 170361307		
LOCATION: Brooklyn, NY	**SURFACE ELEVATION AND DATUM:** N/A		
SAMPLER: Caroline Devin	**SAMPLE DATE STARTED:** 12/23/2024	**DATE FINISHED:** 12/23/2024	
INSPECTOR: Caroline Devin	**TYPE OF SAMPLING DEVICE:** 6-Liter Summa Canister		
POTENTIAL SAMPLE INTERFERENCES: None	**WEATHER CONDITIONS (PRECIP., TEMP., PRESS., WIND SPEED AND DIR.):**		
	Temp:	19 deg F	
	Wind:	0mph	
	Precipitation:	0.0 in last 24 hours	
	Pressure:	30.66 inHg	

METHOD OF INSTALLATION AND SAMPLING:

Langan field screened the sample location with a ppbRAE 3000 photoionization detector and connected 3/16-inch ID x 3/8-inch OD silicone tubing to the canister and inserted it approximately 2 inches into the drain prior to sampling. Sample consisted of 6L Summa canister fitted with an 2-hour flow control valve. The valve was opened to initiate the 2-hour sample collection. The sample and flow controller were checked periodically during sampling to ensure proper operation.

SAMPLE DETAILS	
HEIGHT ABOVE GROUND (FT):	N/A
PID BEFORE SAMPLE (PPB):	49.0
SAMPLE START TIME:	10:15
SAMPLE STOP TIME:	12:06
TOTAL SAMPLE TIME (MIN):	111
REGULATOR FLOW RATE (L/MIN):	0.04
VOLUME OF SAMPLE (LITERS):	4.77
PID AFTER SAMPLE (PPB):	NM
SAMPLE MOISTURE CONTENT:	N/A
CAN SERIAL NUMBER:	43000
REGULATOR SERIAL NUMBER:	19393
CAN START VACUUM PRESS. (" HG):	-30
CAN STOP VACUUM PRESS. (" HG):	-6

SAMPLE LOCATION SKETCH

See Sample Location Plan

NOTES

NM - Not Measured

Langan Engineering, Environmental, Surveying, Landscape Architecture, and Geology D.P.C.
21 Penn Plaza, 360 West 31st Street, 8th Floor, New York, New York 10001-2727

AIR SAMPLING LOG SHEET

Sample Number: AA01_012825

PROJECT: 514 Union Street		**PROJECT NO.:** 170361307	
LOCATION: Brooklyn, NY		**SURFACE ELEVATION AND DATUM:** N/A	
SAMPLER: Caroline Devin		**SAMPLE DATE STARTED:** 1/27/2025	**DATE FINISHED:** 1/28/2025
INSPECTOR: Caroline Devin		**TYPE OF SAMPLING DEVICE:** 6-Liter Summa Canister	
POTENTIAL SAMPLE INTERFERENCES: None		**WEATHER CONDITIONS (PRECIP., TEMP., PRESS., WIND SPEED AND DIR.):**	
		Temp:	33 deg F
		Wind:	SW @12mph
		Precipitation:	0.0 in last 24 hours
		Pressure:	29.65 inHg

METHOD OF INSTALLATION AND SAMPLING:

Langan field screened the sample location with a ppbRAE 3000 photoionization detector prior to sampling. Sample consisted of 6L Summa canister fitted with an 8-hour flow control valve. The valve was opened to initiate the 8-hour sample collection. The sample and flow controller were checked each hour during sampling to ensure proper operation.

SAMPLE DETAILS

HEIGHT ABOVE GROUND (FT):	4
PID BEFORE SAMPLE (PPB):	0.0
SAMPLE START TIME:	0:50
SAMPLE STOP TIME:	8:50
TOTAL SAMPLE TIME (MIN):	480
REGULATOR FLOW RATE (L/MIN):	10.37
VOLUME OF SAMPLE (LITERS):	4.98
PID AFTER SAMPLE (PPB):	0.0
SAMPLE MOISTURE CONTENT:	N/A
CAN SERIAL NUMBER:	41939
REGULATOR SERIAL NUMBER:	19381
CAN START VACUUM PRESS. (" HG):	-28
CAN STOP VACUUM PRESS. (" HG):	-6

SAMPLE LOCATION SKETCH

See Sample Location Plan

NOTES

Langan Engineering, Environmental, Surveying, Landscape Architecture, and Geology D.P.C.
21 Penn Plaza, 360 West 31st Street, 8th Floor, New York, New York 10001-2727

AIR SAMPLING LOG SHEET

Sample Number: IA01_012825

PROJECT: 514 Union Street		**PROJECT NO.:** 170361307	
LOCATION: Brooklyn, NY		**SURFACE ELEVATION AND DATUM:** N/A	
SAMPLER: Caroline Devin		**SAMPLE DATE STARTED:** 1/27/2025	**DATE FINISHED:** 1/28/2025
INSPECTOR: Caroline Devin		**TYPE OF SAMPLING DEVICE:** 6-Liter Summa Canister	
POTENTIAL SAMPLE INTERFERENCES: None		**WEATHER CONDITIONS (PRECIP., TEMP., PRESS., WIND SPEED AND DIR.):**	
		Temp:	33 deg F
		Wind:	SW @12mph
		Precipitation:	0.0 in last 24 hours
		Pressure:	29.65 inHg

METHOD OF INSTALLATION AND SAMPLING:

Langan field screened the sample location with a ppbRAE 3000 photoionization detector prior to sampling. Sample consisted of 6L Summa canister fitted with an 8-hour flow control valve. The valve was opened to initiate the 8-hour sample collection. The sample and flow controller were checked each hour during sampling to ensure proper operation.

SAMPLE DETAILS	
HEIGHT ABOVE GROUND (FT):	4
PID BEFORE SAMPLE (PPB):	36.0
SAMPLE START TIME:	0:51
SAMPLE STOP TIME:	8:51
TOTAL SAMPLE TIME (MIN):	480
REGULATOR FLOW RATE (L/MIN):	10.37
VOLUME OF SAMPLE (LITERS):	4.98
PID AFTER SAMPLE (PPB):	39.0
SAMPLE MOISTURE CONTENT:	N/A
CAN SERIAL NUMBER:	28844
REGULATOR SERIAL NUMBER:	21023
CAN START VACUUM PRESS. (" HG):	-28
CAN STOP VACUUM PRESS. (" HG):	-6

SAMPLE LOCATION SKETCH

See Sample Location Plan

NOTES

Langan Engineering, Environmental, Surveying, Landscape Architecture, and Geology D.P.C.
21 Penn Plaza, 360 West 31st Street, 8th Floor, New York, New York 10001-2727

AIR SAMPLING LOG SHEET

Sample Number: IA02_012825

PROJECT: 514 Union Street		**PROJECT NO.:** 170361307	
LOCATION: Brooklyn, NY		**SURFACE ELEVATION AND DATUM:** N/A	
SAMPLER: Caroline Devin		**SAMPLE DATE STARTED:** 1/27/2025	**DATE FINISHED:** 1/28/2025
INSPECTOR: Caroline Devin		**TYPE OF SAMPLING DEVICE:** 6-Liter Summa Canister	
POTENTIAL SAMPLE INTERFERENCES: None		**WEATHER CONDITIONS (PRECIP., TEMP., PRESS., WIND SPEED AND DIR.):**	
		Temp:	33 deg F
		Wind:	SW @12mph
		Precipitation:	0.0 in last 24 hours
		Pressure:	29.65 inHg

METHOD OF INSTALLATION AND SAMPLING:

Langan field screened the sample location with a ppbRAE 3000 photoionization detector prior to sampling. Sample consisted of 6L Summa canister fitted with an 8-hour flow control valve. The valve was opened to initiate the 8-hour sample collection. The sample and flow controller were checked each hour during sampling to ensure proper operation.

SAMPLE DETAILS

HEIGHT ABOVE GROUND (FT):	4
PID BEFORE SAMPLE (PPB):	36.0
SAMPLE START TIME:	0:52
SAMPLE STOP TIME:	8:52
TOTAL SAMPLE TIME (MIN):	480
REGULATOR FLOW RATE (L/MIN):	10.67
VOLUME OF SAMPLE (LITERS):	5.12
PID AFTER SAMPLE (PPB):	33.0
SAMPLE MOISTURE CONTENT:	N/A
CAN SERIAL NUMBER:	48288
REGULATOR SERIAL NUMBER:	21021
CAN START VACUUM PRESS. (" HG):	-30
CAN STOP VACUUM PRESS. (" HG):	-6

SAMPLE LOCATION SKETCH

See Sample Location Plan

NOTES

Vaccuum pressure dropped rapidly in half hour span (4:35 AM - 5:05 AM)

Langan Engineering, Environmental, Surveying, Landscape Architecture, and Geology D.P.C.
21 Penn Plaza, 360 West 31st Street, 8th Floor, New York, New York 10001-2727

AIR SAMPLING LOG SHEET

Sample Number: IA03_012825

PROJECT: 514 Union Street		**PROJECT NO.:** 170361307	
LOCATION: Brooklyn, NY		**SURFACE ELEVATION AND DATUM:** N/A	
SAMPLER: Caroline Devin		**SAMPLE DATE STARTED:** 1/27/2025	**DATE FINISHED:** 1/28/2025
INSPECTOR: Caroline Devin		**TYPE OF SAMPLING DEVICE:** 6-Liter Summa Canister	
POTENTIAL SAMPLE INTERFERENCES: None		**WEATHER CONDITIONS (PRECIP., TEMP., PRESS., WIND SPEED AND DIR.):**	
		Temp:	33 deg F
		Wind:	SW @12mph
		Precipitation:	0.0 in last 24 hours
		Pressure:	29.65 inHg

METHOD OF INSTALLATION AND SAMPLING:

Langan field screened the sample location with a ppbRAE 3000 photoionization detector prior to sampling. Sample consisted of 6L Summa canister fitted with an 8-hour flow control valve. The valve was opened to initiate the 8-hour sample collection. The sample and flow controller were checked each hour during sampling to ensure proper operation.

SAMPLE DETAILS	
HEIGHT ABOVE GROUND (FT):	4
PID BEFORE SAMPLE (PPB):	45.0
SAMPLE START TIME:	0:53
SAMPLE STOP TIME:	7:44
TOTAL SAMPLE TIME (MIN):	411
REGULATOR FLOW RATE (L/MIN):	10.81
VOLUME OF SAMPLE (LITERS):	4.44
PID AFTER SAMPLE (PPB):	51.0
SAMPLE MOISTURE CONTENT:	N/A
CAN SERIAL NUMBER:	28850
REGULATOR SERIAL NUMBER:	19428
CAN START VACUUM PRESS. (" HG):	-30
CAN STOP VACUUM PRESS. (" HG):	-5

SAMPLE LOCATION SKETCH

See Sample Location Plan

NOTES

Langan Engineering, Environmental, Surveying, Landscape Architecture, and Geology D.P.C.
21 Penn Plaza, 360 West 31st Street, 8th Floor, New York, New York 10001-2727

AIR SAMPLING LOG SHEET

Sample Number: IA04_012825

PROJECT: 514 Union Street	**PROJECT NO.:** 170361307		
LOCATION: Brooklyn, NY	**SURFACE ELEVATION AND DATUM:** N/A		
SAMPLER: Caroline Devin	**SAMPLE DATE STARTED:** 1/27/2025	**DATE FINISHED:** 1/28/2025	
INSPECTOR: Caroline Devin	**TYPE OF SAMPLING DEVICE:** 6-Liter Summa Canister		
POTENTIAL SAMPLE INTERFERENCES: None	**WEATHER CONDITIONS (PRECIP., TEMP., PRESS., WIND SPEED AND DIR.):**		
	Temp:	33 deg F	
	Wind:	SW @12mph	
	Precipitation:	0.0 in last 24 hours	
	Pressure:	29.65 inHg	

METHOD OF INSTALLATION AND SAMPLING:

Langan field screened the sample location with a ppbRAE 3000 photoionization detector prior to sampling. Sample consisted of 6L Summa canister fitted with an 8-hour flow control valve. The valve was opened to initiate the 8-hour sample collection. The sample and flow controller were checked each hour during sampling to ensure proper operation.

SAMPLE DETAILS

HEIGHT ABOVE GROUND (FT):	4
PID BEFORE SAMPLE (PPB):	43.0
SAMPLE START TIME:	0:54
SAMPLE STOP TIME:	7:45
TOTAL SAMPLE TIME (MIN):	411
REGULATOR FLOW RATE (L/MIN):	11.2
VOLUME OF SAMPLE (LITERS):	4.60
PID AFTER SAMPLE (PPB):	57.0
SAMPLE MOISTURE CONTENT:	N/A
CAN SERIAL NUMBER:	20944
REGULATOR SERIAL NUMBER:	19407
CAN START VACUUM PRESS. (" HG):	-27
CAN STOP VACUUM PRESS. (" HG):	-5

SAMPLE LOCATION SKETCH

See Sample Location Plan

NOTES

Langan Engineering, Environmental, Surveying, Landscape Architecture, and Geology D.P.C.
21 Penn Plaza, 360 West 31st Street, 8th Floor, New York, New York 10001-2727

AIR SAMPLING LOG SHEET

Sample Number: AA01_032025

PROJECT: 514 Union Street	**PROJECT NO.:** 170361307		
LOCATION: Brooklyn, NY	**SURFACE ELEVATION AND DATUM:** N/A		
SAMPLER: Caroline Devin	**SAMPLE DATE STARTED:** 3/20/2025	**DATE FINISHED:** 3/20/2025	
INSPECTOR: Caroline Devin	**TYPE OF SAMPLING DEVICE:** 6-Liter Summa Canister		
POTENTIAL SAMPLE INTERFERENCES: None	**WEATHER CONDITIONS (PRECIP., TEMP., PRESS., WIND SPEED AND DIR.):**		
	Temp:	42 deg F	
	Wind:	SE @9mph	
	Precipitation:	0.0 in last 24 hours	
	Pressure:	30.01 inHg	

METHOD OF INSTALLATION AND SAMPLING:

Langan field screened the sample location with a ppbRAE 3000 photoionization detector prior to sampling. Sample consisted of 6L Summa canister fitted with an 8-hour flow control valve. The valve was opened to initiate the 8-hour sample collection. The sample and flow controller were checked each hour during sampling to ensure proper operation.

SAMPLE DETAILS

HEIGHT ABOVE GROUND (FT):	4
PID BEFORE SAMPLE (PPB):	0.0
SAMPLE START TIME:	0:28
SAMPLE STOP TIME:	7:10
TOTAL SAMPLE TIME (MIN):	402
REGULATOR FLOW RATE (L/MIN):	10.8
VOLUME OF SAMPLE (LITERS):	4.34
PID AFTER SAMPLE (PPB):	0.0
SAMPLE MOISTURE CONTENT:	N/A
CAN SERIAL NUMBER:	49976
REGULATOR SERIAL NUMBER:	19415
CAN START VACUUM PRESS. (" HG):	-29
CAN STOP VACUUM PRESS. (" HG):	-5

SAMPLE LOCATION SKETCH

See Sample Location Plan

NOTES

Langan Engineering, Environmental, Surveying, Landscape Architecture, and Geology D.P.C.
21 Penn Plaza, 360 West 31st Street, 8th Floor, New York, New York 10001-2727

AIR SAMPLING LOG SHEET

Sample Number: IA01_032025

PROJECT: 514 Union Street	**PROJECT NO.:** 170361307		
LOCATION: Brooklyn, NY	**SURFACE ELEVATION AND DATUM:** N/A		
SAMPLER: Caroline Devin	**SAMPLE DATE STARTED:** 3/20/2025	**DATE FINISHED:** 3/20/2025	
INSPECTOR: Caroline Devin	**TYPE OF SAMPLING DEVICE:** 6-Liter Summa Canister		
POTENTIAL SAMPLE INTERFERENCES: None	**WEATHER CONDITIONS (PRECIP., TEMP., PRESS., WIND SPEED AND DIR.):**		
	Temp:	42 deg F	
	Wind:	SE @9mph	
	Precipitation:	0.0 in last 24 hours	
	Pressure:	30.01 inHg	

METHOD OF INSTALLATION AND SAMPLING:

Langan field screened the sample location with a ppbRAE 3000 photoionization detector prior to sampling. Sample consisted of 6L Summa canister fitted with an 8-hour flow control valve. The valve was opened to initiate the 8-hour sample collection. The sample and flow controller were checked each hour during sampling to ensure proper operation.

SAMPLE DETAILS

HEIGHT ABOVE GROUND (FT):	4
PID BEFORE SAMPLE (PPB):	19.0
SAMPLE START TIME:	0:24
SAMPLE STOP TIME:	7:40
TOTAL SAMPLE TIME (MIN):	436
REGULATOR FLOW RATE (L/MIN):	10.80
VOLUME OF SAMPLE (LITERS):	4.71
PID AFTER SAMPLE (PPB):	29.0
SAMPLE MOISTURE CONTENT:	N/A
CAN SERIAL NUMBER:	49998
REGULATOR SERIAL NUMBER:	20927
CAN START VACUUM PRESS. (" HG):	-30
CAN STOP VACUUM PRESS. (" HG):	-6

SAMPLE LOCATION SKETCH

See Sample Location Plan

NOTES

Langan Engineering, Environmental, Surveying, Landscape Architecture, and Geology D.P.C.
21 Penn Plaza, 360 West 31st Street, 8th Floor, New York, New York 10001-2727

AIR SAMPLING LOG SHEET

Sample Number: IA02_032025

PROJECT: 514 Union Street	**PROJECT NO.:** 170361307		
LOCATION: Brooklyn, NY	**SURFACE ELEVATION AND DATUM:** N/A		
SAMPLER: Caroline Devin	**SAMPLE DATE STARTED:** 3/20/2025	**DATE FINISHED:** 3/20/2025	
INSPECTOR: Caroline Devin	**TYPE OF SAMPLING DEVICE:** 6-Liter Summa Canister		
POTENTIAL SAMPLE INTERFERENCES: None	**WEATHER CONDITIONS (PRECIP., TEMP., PRESS., WIND SPEED AND DIR.):**		
	Temp:	42 deg F	
	Wind:	SE @9mph	
	Precipitation:	0.0 in last 24 hours	
	Pressure:	30.01 inHg	

METHOD OF INSTALLATION AND SAMPLING:

Langan field screened the sample location with a ppbRAE 3000 photoionization detector prior to sampling. Sample consisted of 6L Summa canister fitted with an 8-hour flow control valve. The valve was opened to initiate the 8-hour sample collection. The sample and flow controller were checked each hour during sampling to ensure proper operation.

SAMPLE DETAILS

HEIGHT ABOVE GROUND (FT):	4
PID BEFORE SAMPLE (PPB):	19.0
SAMPLE START TIME:	0:25
SAMPLE STOP TIME:	7:08
TOTAL SAMPLE TIME (MIN):	403
REGULATOR FLOW RATE (L/MIN):	10.8
VOLUME OF SAMPLE (LITERS):	4.35
PID AFTER SAMPLE (PPB):	22.0
SAMPLE MOISTURE CONTENT:	N/A
CAN SERIAL NUMBER:	51008
REGULATOR SERIAL NUMBER:	19431
CAN START VACUUM PRESS. (" HG):	-29
CAN STOP VACUUM PRESS. (" HG):	-6

SAMPLE LOCATION SKETCH

See Sample Location Plan

NOTES

Vaccuum pressure dropped rapidly in half hour span (4:35 AM - 5:05 AM)

Langan Engineering, Environmental, Surveying, Landscape Architecture, and Geology D.P.C.
21 Penn Plaza, 360 West 31st Street, 8th Floor, New York, New York 10001-2727

AIR SAMPLING LOG SHEET

Sample Number: IA03_032025

PROJECT: 514 Union Street	**PROJECT NO.:** 170361307		
LOCATION: Brooklyn, NY	**SURFACE ELEVATION AND DATUM:** N/A		
SAMPLER: Caroline Devin	**SAMPLE DATE STARTED:** 3/20/2025	**DATE FINISHED:** 3/20/2025	
INSPECTOR: Caroline Devin	**TYPE OF SAMPLING DEVICE:** 6-Liter Summa Canister		
POTENTIAL SAMPLE INTERFERENCES: None	**WEATHER CONDITIONS (PRECIP., TEMP., PRESS., WIND SPEED AND DIR.):**		
	Temp:	42 deg F	
	Wind:	SE @9mph	
	Precipitation:	0.0 in last 24 hours	
	Pressure:	30.01 inHg	

METHOD OF INSTALLATION AND SAMPLING:

Langan field screened the sample location with a ppbRAE 3000 photoionization detector prior to sampling. Sample consisted of 6L Summa canister fitted with an 8-hour flow control valve. The valve was opened to initiate the 8-hour sample collection. The sample and flow controller were checked each hour during sampling to ensure proper operation.

SAMPLE DETAILS

HEIGHT ABOVE GROUND (FT):	4
PID BEFORE SAMPLE (PPB):	42.0
SAMPLE START TIME:	0:26
SAMPLE STOP TIME:	7:05
TOTAL SAMPLE TIME (MIN):	399
REGULATOR FLOW RATE (L/MIN):	10.8
VOLUME OF SAMPLE (LITERS):	4.31
PID AFTER SAMPLE (PPB):	50.0
SAMPLE MOISTURE CONTENT:	N/A
CAN SERIAL NUMBER:	34501
REGULATOR SERIAL NUMBER:	17190
CAN START VACUUM PRESS. (" HG):	-30
CAN STOP VACUUM PRESS. (" HG):	-6

SAMPLE LOCATION SKETCH

See Sample Location Plan

NOTES

Langan Engineering, Environmental, Surveying, Landscape Architecture, and Geology D.P.C.
21 Penn Plaza, 360 West 31st Street, 8th Floor, New York, New York 10001-2727

AIR SAMPLING LOG SHEET

Sample Number: IA04_032025

PROJECT: 514 Union Street	**PROJECT NO.:** 170361307		
LOCATION: Brooklyn, NY	**SURFACE ELEVATION AND DATUM:** N/A		
SAMPLER: Caroline Devin	**SAMPLE DATE STARTED:** 3/20/2025	**DATE FINISHED:** 3/20/2025	
INSPECTOR: Caroline Devin	**TYPE OF SAMPLING DEVICE:** 6-Liter Summa Canister		
POTENTIAL SAMPLE INTERFERENCES: None	**WEATHER CONDITIONS (PRECIP., TEMP., PRESS., WIND SPEED AND DIR.):**		
	Temp:	42 deg F	
	Wind:	SE @9mph	
	Precipitation:	0.0 in last 24 hours	
	Pressure:	30.01 inHg	

METHOD OF INSTALLATION AND SAMPLING:

Langan field screened the sample location with a ppbRAE 3000 photoionization detector prior to sampling. Sample consisted of 6L Summa canister fitted with an 8-hour flow control valve. The valve was opened to initiate the 8-hour sample collection. The sample and flow controller were checked each hour during sampling to ensure proper operation.

SAMPLE DETAILS

HEIGHT ABOVE GROUND (FT):	4
PID BEFORE SAMPLE (PPB):	41.0
SAMPLE START TIME:	0:27
SAMPLE STOP TIME:	7:15
TOTAL SAMPLE TIME (MIN):	408
REGULATOR FLOW RATE (L/MIN):	10.8
VOLUME OF SAMPLE (LITERS):	4.41
PID AFTER SAMPLE (PPB):	55.0
SAMPLE MOISTURE CONTENT:	N/A
CAN SERIAL NUMBER:	49577
REGULATOR SERIAL NUMBER:	20932
CAN START VACUUM PRESS. (" HG):	-30
CAN STOP VACUUM PRESS. (" HG):	-6

SAMPLE LOCATION SKETCH

See Sample Location Plan

NOTES

Langan Engineering, Environmental, Surveying, Landscape Architecture, and Geology D.P.C.
21 Penn Plaza, 360 West 31st Street, 8th Floor, New York, New York 10001-2727

ATTACHMENT E

NYSDOH INDOOR AIR QUALITY QUESTIONNAIRE AND BUILDING INVENTORY

NEW YORK STATE DEPARTMENT OF HEALTH
INDOOR AIR QUALITY QUESTIONNAIRE AND BUILDING INVENTORY
CENTER FOR ENVIRONMENTAL HEALTH

This form must be completed for each residence involved in indoor air testing.

Preparer's Name Caroline Devin Date/Time Prepared 11/26/2024

Preparer's Affiliation Langan Engineering Phone No. 212-479-5400

Purpose of Investigation Indoor Air Sampling

1. OCCUPANT:

Interviewed: Y /(N)

Last Name: _____ First Name: _____

Address: _____

County: _____

Home Phone: _____ Office Phone: _____

Number of Occupants/persons at this location 5-500 Age of Occupants 21+

2. OWNER OR LANDLORD: (Check if same as occupant ___)

Interviewed: Y /(N)

Last Name: _____ First Name: _____

Address: _____

County: _____

Home Phone: _____ Office Phone: _____

3. BUILDING CHARACTERISTICS

Type of Building: (Circle appropriate response)

Residential	School	(Commercial/Multi-use)
Industrial	Church	Other: _____

If the property is residential, type? (Circle appropriate response)

Ranch	2-Family	3-Family
Raised Ranch	Split Level	Colonial
Cape Cod	Contemporary	Mobile Home
Duplex	Apartment House	Townhouses/Condos
Modular	Log Home	Other:_____

If multiple units, how many? _____

If the property is commercial, type?

Business Type(s) Royal Palms Shuffleboard Club

Does it include residences (i.e., multi-use)? Y / (N) If yes, how many? _____

Other characteristics:

Number of floors 1 Building age 1919

Is the building insulated? Y / (N) How air tight? Tight / (Average) / Not Tight

4. AIRFLOW

Use air current tubes or tracer smoke to evaluate airflow patterns and qualitatively describe:

Airflow between floors

N/A

Airflow near source

20 Overhead Fans, Overhead exposed HVAC System (on)

Outdoor air infiltration

Front Doors, attached non-insulated garage doors

Infiltration into air ducts

Overhead exposed HVAC system

5. BASEMENT AND CONSTRUCTION CHARACTERISTICS (Circle all that apply)

a. Above grade construction:	wood frame	concrete	stone	(brick)
b. Basement type:	full	crawlspace	slab	other N/A
c. Basement floor:	concrete	dirt	stone	other N/A
d. Basement floor:	uncovered	covered	covered with N/A	
e. Concrete floor:	unsealed	(sealed)	sealed with wood flooring, and/or paint in parts	
f. Foundation walls:	poured	block	stone	other Brick
g. Foundation walls:	unsealed	(sealed)	sealed with Paint	
h. The basement is:	wet	damp	dry	moldy
i. The basement is:	finished	unfinished	partially finished	
j. Sump present?	Y / (N)			
k. Water in sump?	Y / N / (not applicable)			

Basement/Lowest level depth below grade: N/A (feet)

Identify potential soil vapor entry points and approximate size (e.g., cracks, utility ports, drains)

Bathroom floor drains, utility vaults, floor drains behind southern and eastern bars, drains in the garage

6. HEATING, VENTING and AIR CONDITIONING (Circle all that apply)

Type of heating system(s) used in this building: (circle all that apply – note primary)

(Hot air circulation)	Heat pump	Hot water baseboard	
Space Heaters	Stream radiation	Radiant floor	
Electric baseboard	Wood stove	Outdoor wood boiler	Other _____

The primary type of fuel used is:

(Natural Gas)	Fuel Oil	Kerosene
Electric	Propane	Solar
Wood	Coal	

Domestic hot water tank fueled by: _____

Boiler/furnace located in: Basement Outdoors (Main Floor) Other_____

Air conditioning: (Central Air) Window units Open Windows None

Are there air distribution ducts present? (Y) / N

Describe the supply and cold air return ductwork, and its condition where visible, including whether there is a cold air return and the tightness of duct joints. Indicate the locations on the floor plan diagram.

Visible cold air supply and return ductwork visible and connected to building ceiling. Duct joints appeared to be in good condition. Ductwork connects to roof-mounted HVAC unit. HVAC ERV unit in the center of the floor plan was turned on on 2/22/2024 to bring in fresh air continuously. ERV fresh air unit was confirmed on during the 11/26/24 inspection.

7. OCCUPANCY

Is basement/lowest level occupied? (Full-time) Occasionally Seldom Almost Never

Level	**General Use of Each Floor (e.g., familyroom, bedroom, laundry, workshop, storage)**
Basement	None
1st Floor	Royal Palms Shuffleboard Club
2nd Floor	
3rd Floor	
4th Floor	

8. FACTORS THAT MAY INFLUENCE INDOOR AIR QUALITY

a. Is there an attached garage? (Y) / N

b. Does the garage have a separate heating unit? Y / (N) / NA

c. Are petroleum-powered machines or vehicles stored in the garage (e.g., lawnmower, atv, car) (Y) / N / NA Please specify Food Truck (when operational)

d. Has the building ever had a fire? Y / (N) When? _____

e. Is a kerosene or unvented gas space heater present? Y / (N) Where? _____

f. Is there a workshop or hobby/craft area? Y / (N) Where & Type? _____

g. Is there smoking in the building? Y / (N) How frequently? _____

h. Have cleaning products been used recently? (Y) / N When & Type? Yes; Windex, and Sysco Glass Cleaner

i. Have cosmetic products been used recently? Y / (N) When & Type? _____

j. Has painting/staining been done in the last 6 months? (Y) / N Where & When? Yes, on 10/18/2024; Exterior brick of building

k. Is there new carpet, drapes or other textiles? Y / (N) Where & When? _____

l. Have air fresheners been used recently? Y / (N) When & Type? _____

m. Is there a kitchen exhaust fan? Y / (N) If yes, where vented?_____

n. Is there a bathroom exhaust fan? (Y) / N If yes, where vented? Roof

o. Is there a clothes dryer? Y / (N) If yes, is it vented outside? Y / N

p. Has there been a pesticide application? Y / (N) When & Type?_____

Are there odors in the building? Y / (N)
If yes, please describe: N/A

Do any of the building occupants use solvents at work? Y / (N)
(e.g., chemical manufacturing or laboratory, auto mechanic or auto body shop, painting, fuel oil delivery, boiler mechanic, pesticide application, cosmetologist

If yes, what types of solvents are used? N/A

If yes, are their clothes washed at work? Y / (N)

Do any of the building occupants regularly use or work at a dry-cleaning service? (Circle appropriate response)

Yes, use dry-cleaning regularly (weekly) (No)
Yes, use dry-cleaning infrequently (monthly or less) Unknown
Yes, work at a dry-cleaning service

Is there a radon mitigation system for the building/structure? (Y) / N Date of Installation: SVI Mitigation System installed 2022
Is the system active or passive? (Active)/Passive

9. WATER AND SEWAGE

Water Supply: (Public Water) Drilled Well Driven Well Dug Well Other: _____

Sewage Disposal: (Public Sewer) Septic Tank Leach Field Dry Well Other: _____

10. RELOCATION INFORMATION (for oil spill residential emergency)

a. Provide reasons why relocation is recommended: N/A

b. Residents choose to: remain in home relocate to friends/family relocate to hotel/motel

c. Responsibility for costs associated with reimbursement explained? Y / N

d. Relocation package provided and explained to residents? Y / N

11. FLOOR PLANS

Draw a plan view sketch of the basement and first floor of the building. Indicate air sampling locations, possible indoor air pollution sources and PID meter readings. If the building does not have a basement, please note.

Basement: No Basement

First Floor:

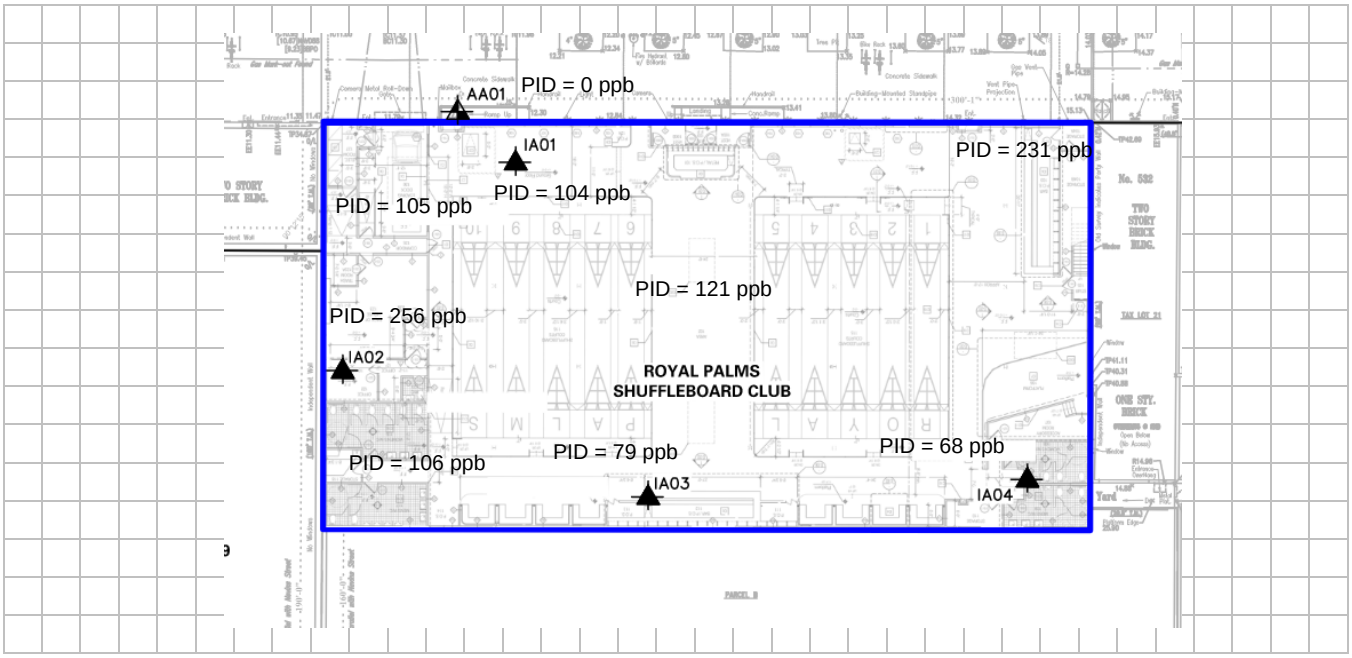

PID = photoionization detector

ppb = parts per billion

12. OUTDOOR PLOT

Draw a sketch of the area surrounding the building being sampled. If applicable, provide information on spill locations, potential air contamination sources (industries, gas stations, repair shops, landfills, etc.), outdoor air sampling location(s) and PID meter readings.

Also indicate compass direction, wind direction and speed during sampling, the locations of the well and septic system, if applicable, and a qualifying statement to help locate the site on a topographic map.

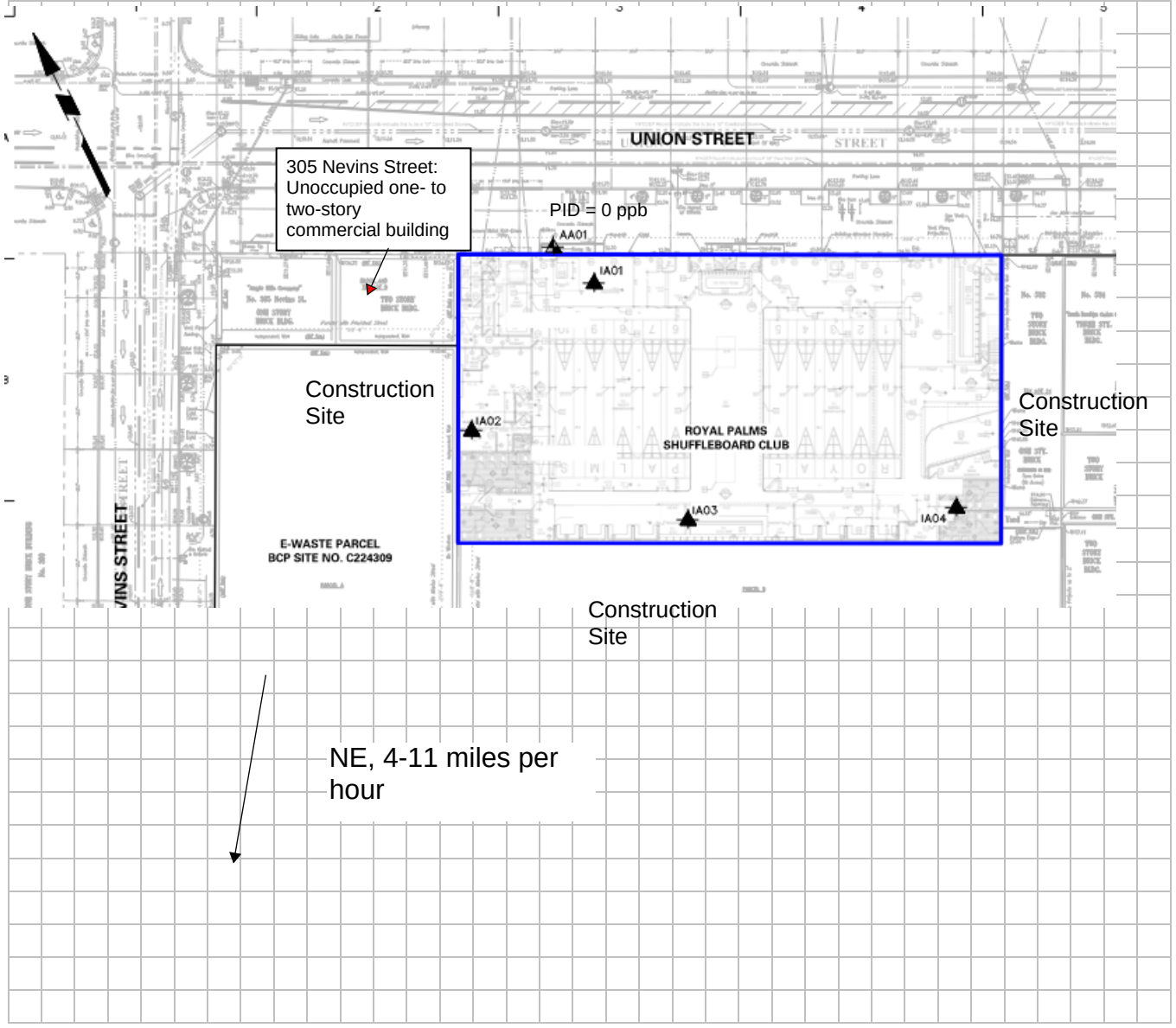

PID = photoionization detector

ppb = parts per billion

13. Product Inventory Form - Continued

Site Name: 514 Union Street **Langan Project No.:** 170361307

Site Location: Brooklyn, New York **Date:** 11/26/2024

Make and model of field instrument used: ppbRAE 3000

Location	Product Description	Size (units)	Condition*	Chemical Ingredients	Field Instrument Reading (ppb)	Photo Y/N
Bar/Staircase	Carpenter's Wood Glue	(1) 16 fl oz	Good, opened U	glyoxal, boric acid	957	Y
	Carpenter's Wood Glue Max	(1) 16 fl oz	Good, opened U	ethyl cyanoacrylate, poly(methyl methacrylate)	957	Y
	Graffiti Safewipes	(1) 20 wipes	Good, unopened UO	citrus terpines, ethanol,	957	Y
	Instant Gum Cutter	(1) 13 oz	Good, opened U	acetone, toulene, xylene, mixed isonomers, carbon dioxide, methanol, ethylbenzene	957	Y
	Coil Cleaner	(1) 19 oz	Good, opened U	2-butoxyethanol, propane, butane, secondary alcohol ethoxylate	957	Y
	Insualting Foam Sealant	(1) 12 oz	Good, opened U	diphenylmethane diisocyanate, 4,4' - methylenediphenyl diisocyanate, polymethylenepolyphenylisocyanate, propoxylated glycerin polymer, polymethylenepolyphenyl polyisocyanate, polypropyleneglycol copolymer, isobutane, paraffin waxes and hydrocarbon waxes chlorinated, tris(1-chloro-2-propyl) phosphate, methyl ether, propane	957	Y
	Ice Machine Cleaner & Descaler	(1) 16 fl oz	Good, opened U	citric acid	957	Y
	Air Conditioner Foaming Cleaner Heavy Duty Detergent	(1) 19 oz	Good, opened U	isobutane, propane, ethylene glycol monobutyl ether	957	Y
	Liquid Nails Adhesive	(1) 10.5 fl oz	Good, opened U	limestone, kaolin, titanium dioxide, cristobalite, crystalline silica	957	Y
	All Purpose Silicone Sealant	(1) 10.1 fl oz	Good, opened U	silicon dioxide	957	Y
	Windex	(2) 23 fl oz	Good, 1 opened U, 1 unopened UO	titanium dioxide, ethylene glycol, diuron	791	Y
Second Floor Bulkhead	Dyco Silicone Acrylic	(8) 5 Gallons	Good, opened U	acrylic resin, aromatic hydrocarbon, titanium dioxide, acetone, xylene	774	Y
	Seal Krete	(2) 1 Gallon	Good, opened U	2,2,4-Trimethyl-1,3-Pentanediol Monoisobutyrate, 1,3,5-Triazine-1,3,5(2H,4H,6H)-Triethanol, 5-Chloro-2-Methyl-4-Isothiazolin-3-one Mixture with	774	Y
	Arizona Gold	(3) 1 Liter	Good, opened U	acrylic polymer product	1156	Y
	Jasco Muriatic Acid	(4) 1 Liter	Good, opened U	Hydrochloric acid based	790	Y
	Regal Select Paint	(9) 3.43 Liters	Good, opened U	titanium dioxide, kaolin, silica amorphous, sodium C14-C16 olefin sulfonate	790	Y
	Roman Wallpaper Adhesive	(3) 1 Gallon	Good, opened U	glycerol	790	Y
	Zinsser Bulls Eye 1-2-3 Primer	(2) 5 Gallons	Good, opened U	Acetaldehyde, calcium carbonate, distillates, petroleum, ethylene glycol, methylchoroisothiazoline, methylisothiazoline,	790	Y
	Krylon Clakboard Paint	(4) 29 Fl oz.	Good, opened U	Acetone, Propane, n-Butyl Acetate, Butane, 2-Propoxyethanol, Amorphous Precipitated Silica, Xylene, mixed isomers, Titanium Dioxide, Zirconium	795	Y
	Sysco Reliance Bleach	(7) 1 Gallon	Good, opened U	Sodium hypochlorate	795	Y
	Sysco Reliance Liquid Hand Soap	(9) 1 Gallon	Good, opened U	Sodium poly(oxyethylene) dodecyl ether sulfate gyderin, sodium chloride, alklamidopropylbetaines, sulfuric acid, salts, ethanol	795	Y

* Describe the condition of the product containers as Unopened (UO), Used (U), or Deteriorated (D).

13. Product Inventory Form - Continued

Location	Product Description	Size (units)	Condition*	Chemical Ingredients	Field Instrument Reading (ppb)	Photo Y/N
Second Floor Bulkhead	Valspar Porch, Floor and Patio Latex Paint	(12+) 31 fl oz	Good, opened U	Titanium oxide, heavy paraffinic oil	1147	Y
	Benjamin Moore Stays Clear Acrylic Polyeurethane	(5) 1 Gallon	Good, opened U	Water, polyeurethane acrylic polymer, coalescing agent, dipropylene glycol monomethyl ether, actylic copolymer	5524	Y
	Behr Premium Floor Coating	(2) 1 Gallon	Good, unopened UO	titanium dioxide, ethylene glycol, diuron	7001	Y
	Fabuloso Multi-Purpose Cleaner	(2) 1 Gallon	Good, opened U	Sodium dodecyl, benzene sulfonate, 2-Phenoxyethanol, sodium sulfate	795	Y
Office	Nella Seal Shuffleboard Court Wax	(6) 1 Gallon	Good, uopened UO	Mineral Spirits	1756	Y
	Clean Revolution Foaming Hand Soap	(1) 1 Gallon	Good, opened U	Water, sodium C14-16 Sulfonate, Glycerin, capryl/decyl glucoside, Cocamidopropyl betaine, lauramidopropylamine oxide, myristamidopropylamine oxide, bis-PEG-19 Methyl ether dimethyl silane, sodium benzoate, tetrasodium glutamate, diacetate, sodium chloride, citric acid, gyceryl oleate	1782	Y
	Brake Parts Cleaner	(1) 14 oz	Good, opened U	acetone, carbon dioxide, toluene	1917	Y
	WD-40	(2) 8 oz	Good, opened U	aliphatic hydrocarbon, petroleum base oil, carbon dioxide	1767	Y
	Wood Glue	(1) 18 fl oz	Good, opened U	water, vinyl acetate polymer, aluminum chloride, hexahydrate, 2-propanol, 1-phenoxy-	1931	Y
	Rust-Oleum Matte Spray	(1) 12 oz	Good, opened U	acetone, propane, naphtha, n-butane, hydrous magnesium silicate, xylenes (o-, m-, p- isomers), hydrotreatedlLight distillate, dimethyl carbonate, titanium dioxide, propylene glycol monobutyl ether, ethylbenzene, ethylene glycol monobutyl ether	1949	Y
	Silicone Sealant	(1) 10.1 fl oz	Good, opened U	%100 silicon	1970	Y
	Interior Paint and Primer	(1) 116 fl oz	Good, opened U	titanium dioxide, kaolin, silica, amorphous, sodium olefin sulfonate	1987	Y
	Valspar Porch, Floor and Patio Latex Paint	31 fl oz	Good, opened U	Titanium oxide, heavy paraffinic oil	1389	Y
	Interior Paint and Primer	(1) 29 fl oz	Good, opened U	titanium dioxide, kaolin, silica, amorphous, sodium olefin sulfonate	1475	Y
Garage	Ice Melter	(2) 50 LB	Good, 1 opened U, 1 unopened UO	sodium chloride, magnesium chloride hexahydrate	682	Y
Supply Closet	Unkown	(9) 1 Gallon	Good, uopened UO	Unknown	2091	Y
	Dawn Dish Detergent	(7) 38 fl oz	Good, unopened UO	sulfuric acid, poly(oxy-1,2-ethanediyl), ethanol, amine oxides	2853	Y
	Fabuloso Multi-Purpose Cleaner	(5) 1 Gallon	Good, 1 opened U, 4 unopened UO	Sodium dodecyl, benzene sulfonate, 2-Phenoxyethanol, sodium sulfate	2347	Y
	Bleach	(2) 8 oz	Good, opened U	sodium hypochlorite	2409	Y
	Liquid Hand Soap	(2) 18 fl oz	Good, 1 opened U, 1 unopened UO	sodium poly(oxyethylene) dodecyl ether sulfate, glycerin, sodum chloride, alkylamidopropylbetaines, sulfuric acid, salts, ethanol	5579	Y
	Windex	(5) 1 Gallon	Good, 1 opened U, 4 unopened UO	titanium dioxide, ethylene glycol, diuron	2890	Y
	Glass Cleaner	(1) 2.5 Gallon	Good, opened U	d-glucopyranose, oligomeric, decyl octyl glycosides	2931	Y
	Toilet Bowl Cleaner Disinfectant	(1) 32 oz	Good, opened U	hydrochloric acid	3429	Y

* Describe the condition of the product containers as Unopened (UO), Used (U), or Deteriorated (D).

NEW YORK STATE DEPARTMENT OF HEALTH
INDOOR AIR QUALITY QUESTIONNAIRE AND BUILDING INVENTORY
CENTER FOR ENVIRONMENTAL HEALTH

This form must be completed for each residence involved in indoor air testing.

Preparer's Name Caroline Devin Date/Time Prepared 1/28/2025

Preparer's Affiliation Langan Engineering Phone No. 212-479-5400

Purpose of Investigation Indoor Air Sampling

1. OCCUPANT:

Interviewed: Y / (N)

Last Name: _____ First Name: _____

Address: _____

County: _____

Home Phone: _____ Office Phone: _____

Number of Occupants/persons at this location 5-500 Age of Occupants 21+

2. OWNER OR LANDLORD: (Check if same as occupant ___)

Interviewed: Y / (N)

Last Name: _____ First Name: _____

Address: _____

County: _____

Home Phone: _____ Office Phone: _____

3. BUILDING CHARACTERISTICS

Type of Building: (Circle appropriate response)

Residential	School	(Commercial/Multi-use)
Industrial	Church	Other: _____

If the property is residential, type? (Circle appropriate response)

Ranch	2-Family	3-Family
Raised Ranch	Split Level	Colonial
Cape Cod	Contemporary	Mobile Home
Duplex	Apartment House	Townhouses/Condos
Modular	Log Home	Other:_____

If multiple units, how many? _____

If the property is commercial, type?

Business Type(s) Royal Palms Shuffleboard Club

Does it include residences (i.e., multi-use)? Y / (N) If yes, how many? _____

Other characteristics:

Number of floors 1 Building age 1919

Is the building insulated? Y / (N) How air tight? Tight / (Average) / Not Tight

4. AIRFLOW

Use air current tubes or tracer smoke to evaluate airflow patterns and qualitatively describe:

Airflow between floors

N/A

Airflow near source

20 Overhead Fans, Overhead exposed HVAC System (on), ERV Units in the center of the main space (on), 2 overhead fresh air ducts in office space (on)

Outdoor air infiltration

Front Doors, attached non-insulated garage doors

Infiltration into air ducts

Overhead exposed HVAC system

5. BASEMENT AND CONSTRUCTION CHARACTERISTICS (Circle all that apply)

a. Above grade construction:	wood frame	concrete	stone	(brick)
b. Basement type:	full	crawlspace	slab	other N/A
c. Basement floor:	concrete	dirt	stone	other N/A
d. Basement floor:	uncovered	covered	covered with N/A	
e. Concrete floor:	unsealed	(sealed)	sealed with wood flooring, and/or paint in parts	
f. Foundation walls:	poured	block	stone	other Brick
g. Foundation walls:	unsealed	(sealed)	sealed with Paint	
h. The basement is:	wet	damp	dry	moldy
i. The basement is:	finished	unfinished	partially finished	
j. Sump present?	Y / (N)			
k. Water in sump?	Y / N / (not applicable)			

Basement/Lowest level depth below grade: N/A (feet)

Identify potential soil vapor entry points and approximate size (e.g., cracks, utility ports, drains)

Bathroom floor drains, utility vaults, floor drains behind southern and eastern bars, drains in the garage

6. HEATING, VENTING and AIR CONDITIONING (Circle all that apply)

Type of heating system(s) used in this building: (circle all that apply – note primary)

(Hot air circulation)	Heat pump	Hot water baseboard	
Space Heaters	Stream radiation	Radiant floor	
Electric baseboard	Wood stove	Outdoor wood boiler	Other _____

The primary type of fuel used is:

(Natural Gas)	Fuel Oil	Kerosene
Electric	Propane	Solar
Wood	Coal	

Domestic hot water tank fueled by: _____

Boiler/furnace located in: Basement Outdoors (Main Floor) Other_____

Air conditioning: (Central Air) Window units Open Windows None

Are there air distribution ducts present? (Y) / N

Describe the supply and cold air return ductwork, and its condition where visible, including whether there is a cold air return and the tightness of duct joints. Indicate the locations on the floor plan diagram.

Visible cold air supply and return ductwork visible and connected to building ceiling. Duct joints appeared to be in good condition. Ductwork connects to roof-mounted HVAC unit. HVAC ERV unit in the center of the floor plan was turned on on 2/22/2024 to bring in fresh air continuously. ERV fresh air unit was confirmed on during the 1/28/25 inspection. Overhead fresh air units were installed by an HVAC contractor in the office space (one in the outer office, one in the inner office), both confirmed on during the 1/28/25.

7. OCCUPANCY

Is basement/lowest level occupied? (Full-time) Occasionally Seldom Almost Never

Level	**General Use of Each Floor (e.g., familyroom, bedroom, laundry, workshop, storage)**
Basement	None
1st Floor	Royal Palms Shuffleboard Club
2nd Floor	
3rd Floor	
4th Floor	

8. FACTORS THAT MAY INFLUENCE INDOOR AIR QUALITY

a. Is there an attached garage? (Y) / N

b. Does the garage have a separate heating unit? Y / (N) / NA

c. Are petroleum-powered machines or vehicles stored in the garage (e.g., lawnmower, atv, car) (Y) / N / NA Please specify Food Truck (when operational)

d. Has the building ever had a fire? Y / (N) When? _____

e. Is a kerosene or unvented gas space heater present? Y / (N) Where? _____

f. Is there a workshop or hobby/craft area? Y / (N) Where & Type? _____

g. Is there smoking in the building? Y / (N) How frequently? _____

h. Have cleaning products been used recently? (Y) / N When & Type? Yes; Windex, and Sysco Glass Cleaner

i. Have cosmetic products been used recently? Y / (N) When & Type? _____

j. Has painting/staining been done in the last 6 months? (Y) / N Where & When? Yes, on 10/18/2024; Exterior brick of building

k. Is there new carpet, drapes or other textiles? Y / (N) Where & When? _____

l. Have air fresheners been used recently? Y / (N) When & Type? _____

m. Is there a kitchen exhaust fan? Y / (N) If yes, where vented?_____

n. Is there a bathroom exhaust fan? (Y) / N If yes, where vented? Roof

o. Is there a clothes dryer? Y / (N) If yes, is it vented outside? Y / N

p. Has there been a pesticide application? Y / (N) When & Type?_____

Are there odors in the building? Y / (N)
If yes, please describe: N/A

Do any of the building occupants use solvents at work? Y / (N)
(e.g., chemical manufacturing or laboratory, auto mechanic or auto body shop, painting, fuel oil delivery, boiler mechanic, pesticide application, cosmetologist

If yes, what types of solvents are used? N/A

If yes, are their clothes washed at work? Y / (N)

Do any of the building occupants regularly use or work at a dry-cleaning service? (Circle appropriate response)

Yes, use dry-cleaning regularly (weekly) (No)
Yes, use dry-cleaning infrequently (monthly or less) Unknown
Yes, work at a dry-cleaning service

Is there a radon mitigation system for the building/structure? (Y) / N Date of Installation: SVI Mitigation System installed 2022
Is the system active or passive? (Active)/Passive

9. WATER AND SEWAGE

Water Supply: (Public Water) Drilled Well Driven Well Dug Well Other: _____

Sewage Disposal: (Public Sewer) Septic Tank Leach Field Dry Well Other: _____

10. RELOCATION INFORMATION (for oil spill residential emergency)

a. Provide reasons why relocation is recommended: N/A

b. Residents choose to: remain in home relocate to friends/family relocate to hotel/motel

c. Responsibility for costs associated with reimbursement explained? Y / N

d. Relocation package provided and explained to residents? Y / N

11. FLOOR PLANS

Draw a plan view sketch of the basement and first floor of the building. Indicate air sampling locations, possible indoor air pollution sources and PID meter readings. If the building does not have a basement, please note.

Basement: No Basement

First Floor:

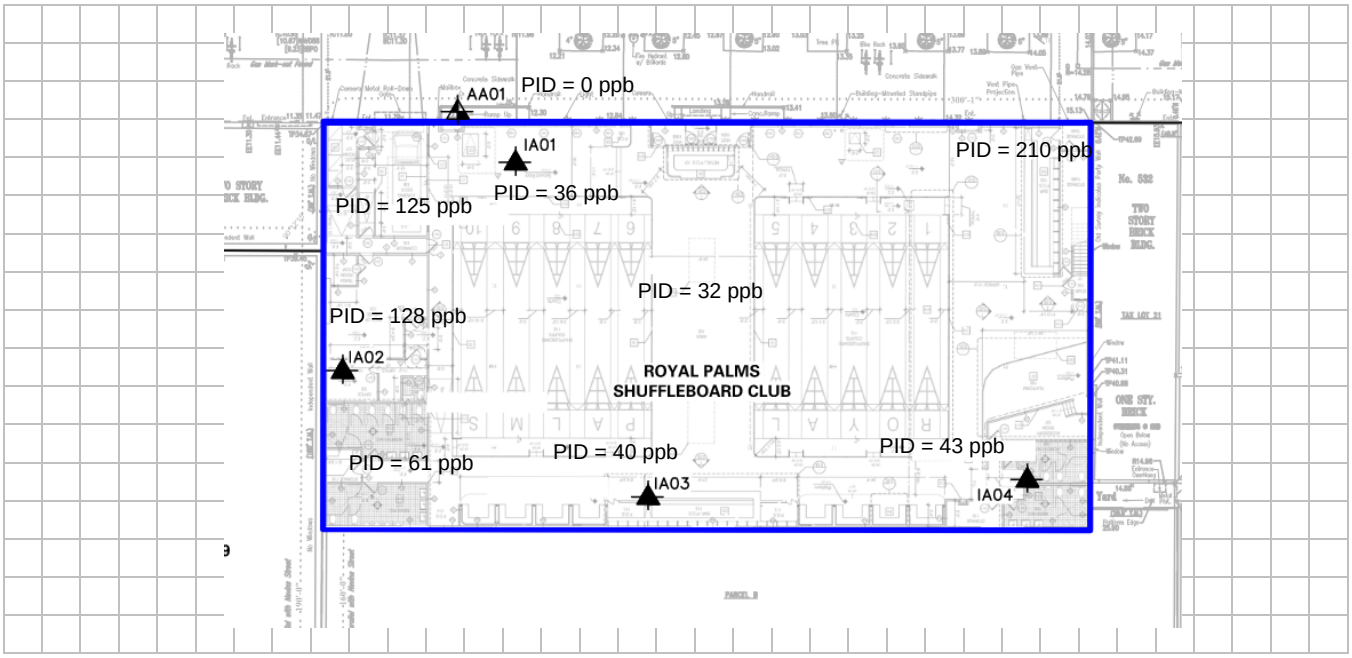

PID = photoionization detector
ppb = parts per billion

12. OUTDOOR PLOT

Draw a sketch of the area surrounding the building being sampled. If applicable, provide information on spill locations, potential air contamination sources (industries, gas stations, repair shops, landfills, etc.), outdoor air sampling location(s) and PID meter readings.

Also indicate compass direction, wind direction and speed during sampling, the locations of the well and septic system, if applicable, and a qualifying statement to help locate the site on a topographic map.

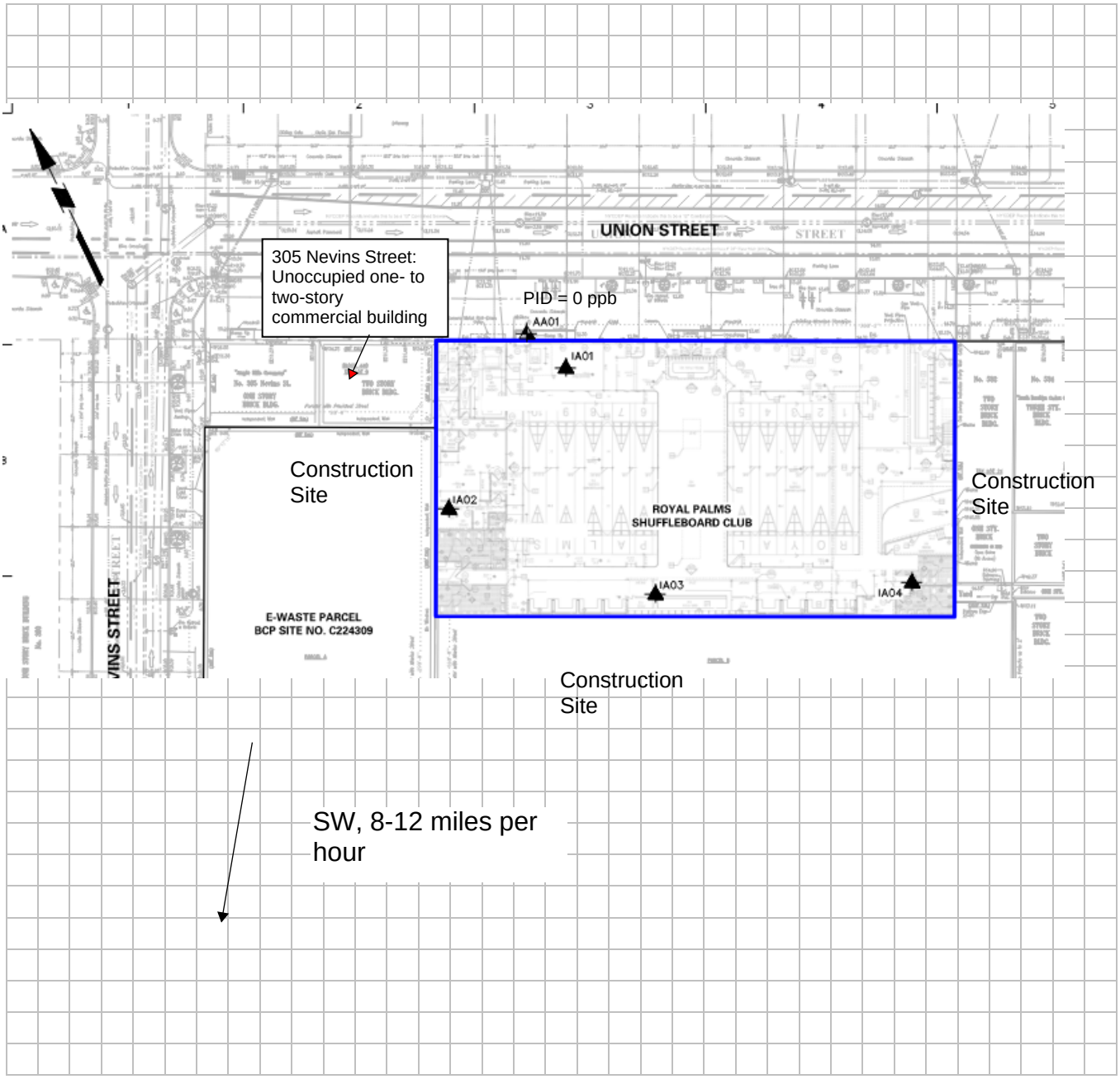

PID = photoionization detector

ppb = parts per billion

13. Product Inventory Form - Continued

Site Name: 514 Union Street
Site Location: Brooklyn, New York
Langan Project No.: 170361307
Date: 1/28/2025

Make and model of field instrument used: ppbRAE 3000

Location	Product Description	Size (units)	Condition*	Chemical Ingredients	Field Instrument Reading (ppb)	Photo Y/N
Bar/Staircase	Carpenter's Wood Glue	(1) 16 fl oz	Good, opened U	glyoxal, boric acid	158	Y
	Carpenter's Wood Glue Max	(1) 16 fl oz	Good, opened U	ethyl cyanoacrylate, poly(methyl methacrylate)	160	Y
	Graffiti Safewipes	(1) 20 wipes	Good, unopened UO	citrus terpines, ethanol,	151	Y
	Instant Gum Cutter	(1) 13 oz	Good, opened U	acetone, toulene, xylene, mixed isonomers, carbon dioxide, methanol, ethylbenzene	156	Y
	Coil Cleaner	(1) 19 oz	Good, opened U	2-butoxyethanol, propane, butane, secondary alcohol ethoxylate	163	Y
	Insualting Foam Sealant	(1) 12 oz	Good, opened U	diphenylmethane diisocyanate, 4,4' - methylenediphenyl diisocyanate, polymethylenepolyphenylisocyanate, propoxylated glycerin polymer, polymethylenepolyphenyl polyisocyanate, polypropyleneglycol copolymer, isobutane, paraffin waxes and hydrocarbon waxes chlorinated, tris(1-chloro-2-propyl) phosphate, methyl ether, propane	271	Y
	Ice Machine Cleaner & Descaler	(1) 16 fl oz	Good, opened U	citric acid	747	Y
	Air Conditioner Foaming Cleaner Heavy Duty Detergent	(1) 19 oz	Good, opened U	isobutane, propane, ethylene glycol monobutyl ether	73	Y
	Liquid Nails Adhesive	(1) 10.5 fl oz	Good, opened U	limestone, kaolin, titanium dioxide, cristobalite, crystalline silica	134	Y
	All Purpose Silicone Sealant	(1) 10.1 fl oz	Good, opened U	silicon dioxide	77	Y
	Windex	(2) 23 fl oz	Good, 1 opened U, 1 unopened UO	titanium dioxide, ethylene glycol, diuron	154	Y
Second Floor Bulkhead	Dyco Silicone Acrylic	(8) 5 Gallons	Good, opened U	acrylic resin, aromatic hydrocarbon, titanium dioxide, acetone, xylene	195	Y
	Seal Krete	(2) 1 Gallon	Good, opened U	2,2,4-Trimethyl-1,3-Pentanediol Monoisobutyrate, 1,3,5-Triazine-1,3,5(2H,4H,6H)-Triethanol, 5-Chloro-2-Methyl-4-Isothiazolin-3-one Mixture with	191	Y
	Arizona Gold	(3) 1 Liter	Good, opened U	acrylic polymer product	191	Y
	Jasco Muriatic Acid	(4) 1 Liter	Good, opened U	Hydrochloric acid based	191	Y
	Regal Select Paint	(9) 3.43 Liters	Good, opened U	titanium dioxide, kaolin, silica amorphous, sodium C14-C16 olefin sulfonate	211	Y
	Roman Wallpaper Adhesive	(3) 1 Gallon	Good, opened U	glycerol	210	Y
	Zinsser Bulls Eye 1-2-3 Primer	(2) 5 Gallons	Good, opened U	Acetaldehyde, calcium carbonate, distillates, petroleum, ethylene glycol, methylchoroisothiazoline, methylisothiazoline,	264	Y
	Krylon Clakboard Paint	(4) 29 Fl oz.	Good, opened U	Acetone, Propane, n-Butyl Acetate, Butane, 2-Propoxyethanol, Amorphous Precipitated Silica, Xylene, mixed isomers, Titanium Dioxide, Zirconium	218	Y
	Sysco Reliance Bleach	(7) 1 Gallon	Good, opened U	Sodium hypochlorate	322	Y
	Sysco Reliance Liquid Hand Soap	(9) 1 Gallon	Good, opened U	Sodium poly(oxyethylene) dodecyl ether sulfate gyderin, sodium chloride, alklamidopropylbetaines, sulfuric acid, salts, ethanol	230	Y

* Describe the condition of the product containers as Unopened (UO), Used (U), or Deteriorated (D).

13. Product Inventory Form - Continued

Location	Product Description	Size (units)	Condition*	Chemical Ingredients	Field Instrument Reading (ppb)	Photo Y/N
	Valspar Porch, Floor and Patio Latex Paint	(12+) 31 fl oz	Good, opened U	Titanium oxide, heavy paraffinic oil	218	Y
	Benjamin Moore Stays Clear Acrylic Polyeurethane	(5) 1 Gallon	Good, opened U	Water, polyeurethane acrylic polymer, coalescing agent, dipropylene glycol monomethyl ether, actylic copolymer	210	Y
	Behr Premium Floor Coating	(2) 1 Gallon	Good, unopened UO	titanium dioxide, ethylene glycol, diuron	210	Y
	Fabuloso Multi-Purpose Cleaner	(2) 1 Gallon	Good, opened U	Sodium dodecyl, benzene sulfonate, 2-Phenoxyethanol, sodium sulfate	210	Y
Office	Nella Seal Shuffleboard Court Wax	(6) 1 Gallon	Good, uopened UO	Mineral Spirits	133	Y
	Clean Revolution Foaming Hand Soap	(1) 1 Gallon	Good, opened U	Water, sodium C14-16 Sulfonate, Glycerin, capryl/decyl glucoside, Cocamidopropyl betaine, lauramidopropylamine oxide, myristamidopropylamine oxide, bis-PEG-19 Methyl ether dimethyl silane, sodium benzoate, tetrasodium glutamate, diacetate, sodium chloride, citric acid, gyceryl oleate	246	Y
	Brake Parts Cleaner	(1) 14 oz	Good, opened U	acetone, carbon dioxide, toluene	231	Y
	WD-40	(2) 8 oz	Good, opened U	aliphatic hydrocarbon, petroleum base oil, carbon dioxide	249	Y
	Wood Glue	(1) 18 fl oz	Good, opened U	water, vinyl acetate polymer, aluminum chloride, hexahydrate, 2-propanol, 1-phenoxy-	183	Y
	Rust-Oleum Matte Spray	(1) 12 oz	Good, opened U	acetone, propane, naphtha, n-butane, hydrous magnesium silicate, xylenes (o-, m-, p- isomers), hydrotreatedlLight distillate, dimethyl carbonate, titanium dioxide, propylene glycol monobutyl ether, ethylbenzene, ethylene glycol monobutyl ether	270	Y
	Silicone Sealant	(1) 10.1 fl oz	Good, opened U	%100 silicon	256	Y
	Interior Paint and Primer	(1) 116 fl oz	Good, opened U	titanium dioxide, kaolin, silica, amorphous, sodium olefin sulfonate	247	Y
	Valspar Porch, Floor and Patio Latex Paint	31 fl oz	Good, opened U	Titanium oxide, heavy paraffinic oil	242	Y
	Interior Paint and Primer	(1) 29 fl oz	Good, opened U	titanium dioxide, kaolin, silica, amorphous, sodium olefin sulfonate	291	Y
Garage	Ice Melter	(2) 50 LB	Good, 1 opened U, 1 unopened UO	sodium chloride, magnesium chloride hexahydrate	147	Y
Supply Closet	Unkown	(9) 1 Gallon	Good, uopened UO	Unknown	209	Y
	Dawn Dish Detergent	(7) 38 fl oz	Good, unopened UO	sulfuric acid, poly(oxy-1,2-ethanediyl), ethanol, amine oxides	285	Y
	Fabuloso Multi-Purpose Cleaner	(5) 1 Gallon	Good, 1 opened U, 4 unopened UO	Sodium dodecyl, benzene sulfonate, 2-Phenoxyethanol, sodium sulfate	234	Y
	Bleach	(2) 8 oz	Good, opened U	sodium hypochlorite	240	Y
	Liquid Hand Soap	(2) 18 fl oz	Good, 1 opened U, 1 unopened UO	sodium poly(oxyethylene) dodecyl ether sulfate, glycerin, sodum chloride, alkylamidopropylbetaines, sulfuric acid, salts, ethanol	447	Y
	Windex	(5) 1 Gallon	Good, 1 opened U, 4 unopened UO	titanium dioxide, ethylene glycol, diuron	289	Y
	Glass Cleaner	(1) 2.5 Gallon	Good, opened U	d-glucopyranose, oligomeric, decyl octyl glycosides	293	Y
	Toilet Bowl Cleaner Disinfectant	(1) 32 oz	Good, opened U	hydrochloric acid	309	Y

* Describe the condition of the product containers as Unopened (UO), Used (U), or Deteriorated (D).

NEW YORK STATE DEPARTMENT OF HEALTH
INDOOR AIR QUALITY QUESTIONNAIRE AND BUILDING INVENTORY
CENTER FOR ENVIRONMENTAL HEALTH

This form must be completed for each residence involved in indoor air testing.

Preparer's Name Caroline Devin Date/Time Prepared 3/20/2025

Preparer's Affiliation Langan Engineering Phone No. 212-479-5400

Purpose of Investigation Indoor Air Sampling

1. OCCUPANT:

Interviewed: Y / (N)

Last Name: _____ First Name: _____

Address: _____

County: _____

Home Phone: _____ Office Phone: _____

Number of Occupants/persons at this location 5-500 Age of Occupants 21+

2. OWNER OR LANDLORD: (Check if same as occupant ___)

Interviewed: Y / (N)

Last Name: _____ First Name: _____

Address: _____

County: _____

Home Phone: _____ Office Phone: _____

3. BUILDING CHARACTERISTICS

Type of Building: (Circle appropriate response)

Residential	School	(Commercial/Multi-use)
Industrial	Church	Other: _____

If the property is residential, type? (Circle appropriate response)

Ranch	2-Family	3-Family
Raised Ranch	Split Level	Colonial
Cape Cod	Contemporary	Mobile Home
Duplex	Apartment House	Townhouses/Condos
Modular	Log Home	Other:_____

If multiple units, how many? _____

If the property is commercial, type?

Business Type(s) Royal Palms Shuffleboard Club

Does it include residences (i.e., multi-use)? Y / (N) If yes, how many? _____

Other characteristics:

Number of floors 1 Building age 1919

Is the building insulated? Y / (N) How air tight? Tight / (Average) / Not Tight

4. AIRFLOW

Use air current tubes or tracer smoke to evaluate airflow patterns and qualitatively describe:

Airflow between floors

N/A

Airflow near source

20 Overhead Fans, Overhead exposed HVAC System (on), ERV Units in the center of the main space (on), 2 overhead fresh air ducts in office space (on)

Outdoor air infiltration

Front Doors, attached non-insulated garage doors

Infiltration into air ducts

Overhead exposed HVAC system

5. BASEMENT AND CONSTRUCTION CHARACTERISTICS (Circle all that apply)

a. Above grade construction:	wood frame	concrete	stone	(brick)
b. Basement type:	full	crawlspace	slab	other N/A
c. Basement floor:	concrete	dirt	stone	other N/A
d. Basement floor:	uncovered	covered	covered with N/A	
e. Concrete floor:	unsealed	(sealed)	sealed with wood flooring, and/or paint in parts	
f. Foundation walls:	poured	block	stone	other Brick
g. Foundation walls:	unsealed	(sealed)	sealed with Paint	
h. The basement is:	wet	damp	dry	moldy
i. The basement is:	finished	unfinished	partially finished	
j. Sump present?	Y / (N)			
k. Water in sump?	Y / N / (not applicable)			

Basement/Lowest level depth below grade: N/A (feet)

Identify potential soil vapor entry points and approximate size (e.g., cracks, utility ports, drains)

Bathroom floor drains, utility vaults, floor drains behind southern and eastern bars, drains in the garage

6. HEATING, VENTING and AIR CONDITIONING (Circle all that apply)

Type of heating system(s) used in this building: (circle all that apply – note primary)

(Hot air circulation)	Heat pump	Hot water baseboard	
Space Heaters	Stream radiation	Radiant floor	
Electric baseboard	Wood stove	Outdoor wood boiler	Other _____

The primary type of fuel used is:

(Natural Gas)	Fuel Oil	Kerosene
Electric	Propane	Solar
Wood	Coal	

Domestic hot water tank fueled by: _____

Boiler/furnace located in: Basement Outdoors (Main Floor) Other_____

Air conditioning: (Central Air) Window units Open Windows None

Are there air distribution ducts present? (Y) / N

Describe the supply and cold air return ductwork, and its condition where visible, including whether there is a cold air return and the tightness of duct joints. Indicate the locations on the floor plan diagram.

Visible cold air supply and return ductwork visible and connected to building ceiling. Duct joints appeared to be in good condition. Ductwork connects to roof-mounted HVAC unit. HVAC ERV unit in the center of the floor plan was turned on on 2/22/2024 to bring in fresh air continuously. ERV fresh air unit was confirmed on during the 3/20/25 inspection. Overhead fresh air units were installed by an HVAC contractor in the office space (one in the outer office, one in the inner office), both confirmed on during the 3/20/25. Air purifier units in the office space were off.

7. OCCUPANCY

Is basement/lowest level occupied? (Full-time) Occasionally Seldom Almost Never

Level	**General Use of Each Floor (e.g., familyroom, bedroom, laundry, workshop, storage)**
Basement	None
1st Floor	Royal Palms Shuffleboard Club
2nd Floor	
3rd Floor	
4th Floor	

8. FACTORS THAT MAY INFLUENCE INDOOR AIR QUALITY

a. Is there an attached garage? (Y) / N

b. Does the garage have a separate heating unit? Y / (N) / NA

c. Are petroleum-powered machines or vehicles stored in the garage (e.g., lawnmower, atv, car) (Y) / N / NA Please specify Food Truck (when operational)

d. Has the building ever had a fire? Y / (N) When?

e. Is a kerosene or unvented gas space heater present? Y / (N) Where?

f. Is there a workshop or hobby/craft area? Y / (N) Where & Type?

g. Is there smoking in the building? Y / (N) How frequently?

h. Have cleaning products been used recently? (Y) / N When & Type? Yes; Windex, and Sysco Glass Cleaner

i. Have cosmetic products been used recently? Y / (N) When & Type?

j. Has painting/staining been done in the last 6 months? (Y) / N Where & When? Yes, on 10/18/2024; Exterior brick of building

k. Is there new carpet, drapes or other textiles? Y / (N) Where & When? _____

l. Have air fresheners been used recently? Y / (N) When & Type? _____

m. Is there a kitchen exhaust fan? Y / (N) If yes, where vented?_____

n. Is there a bathroom exhaust fan? (Y) / N If yes, where vented? Roof

o. Is there a clothes dryer? Y / (N) If yes, is it vented outside? Y / N

p. Has there been a pesticide application? Y / (N) When & Type?_____

Are there odors in the building? Y / (N)
If yes, please describe: N/A

Do any of the building occupants use solvents at work? Y / (N)
(e.g., chemical manufacturing or laboratory, auto mechanic or auto body shop, painting, fuel oil delivery, boiler mechanic, pesticide application, cosmetologist

If yes, what types of solvents are used? N/A

If yes, are their clothes washed at work? Y / (N)

Do any of the building occupants regularly use or work at a dry-cleaning service? (Circle appropriate response)

Yes, use dry-cleaning regularly (weekly) (No)
Yes, use dry-cleaning infrequently (monthly or less) Unknown
Yes, work at a dry-cleaning service

Is there a radon mitigation system for the building/structure? (Y) / N Date of Installation: SVI Mitigation System installed 2022
Is the system active or passive? (Active)/Passive

9. WATER AND SEWAGE

Water Supply: (Public Water) Drilled Well Driven Well Dug Well Other: _____

Sewage Disposal: (Public Sewer) Septic Tank Leach Field Dry Well Other: _____

10. RELOCATION INFORMATION (for oil spill residential emergency)

a. Provide reasons why relocation is recommended: N/A

b. Residents choose to: remain in home relocate to friends/family relocate to hotel/motel

c. Responsibility for costs associated with reimbursement explained? Y / N

d. Relocation package provided and explained to residents? Y / N

11. FLOOR PLANS

Draw a plan view sketch of the basement and first floor of the building. Indicate air sampling locations, possible indoor air pollution sources and PID meter readings. If the building does not have a basement, please note.

Basement: No Basement

First Floor:

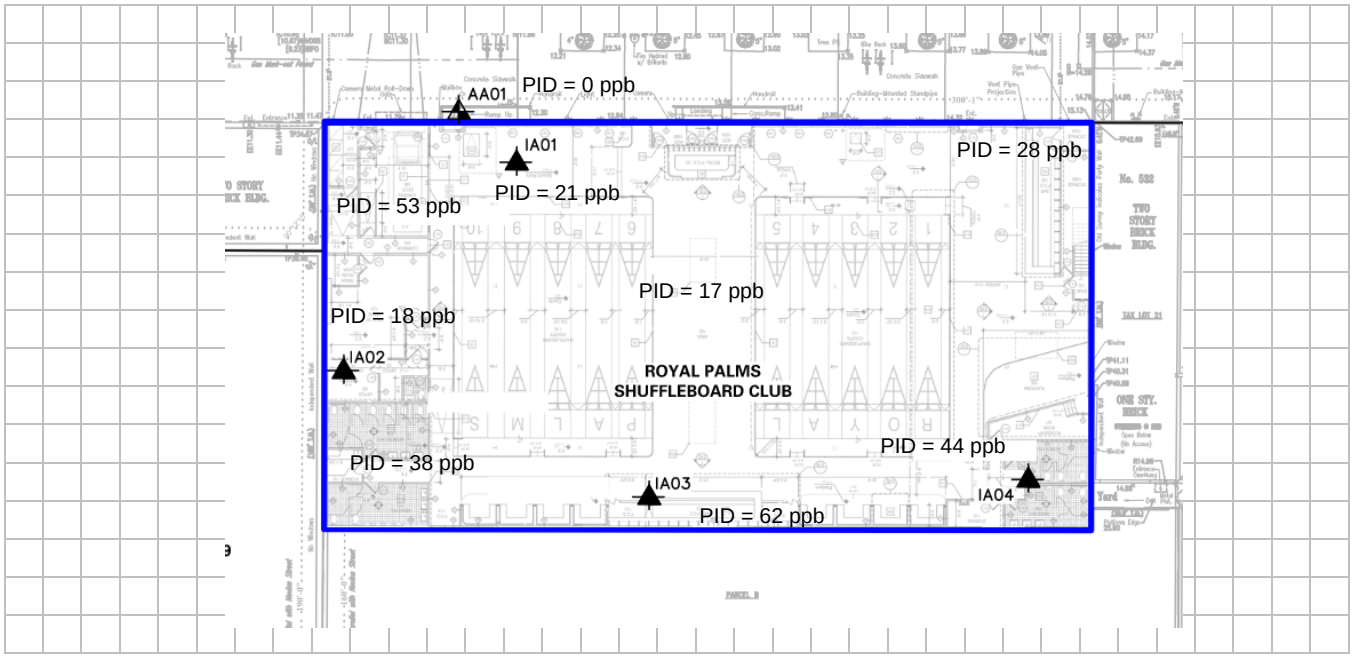

PID = photoionization detector
ppb = parts per billion

12. OUTDOOR PLOT

Draw a sketch of the area surrounding the building being sampled. If applicable, provide information on spill locations, potential air contamination sources (industries, gas stations, repair shops, landfills, etc.), outdoor air sampling location(s) and PID meter readings.

Also indicate compass direction, wind direction and speed during sampling, the locations of the well and septic system, if applicable, and a qualifying statement to help locate the site on a topographic map.

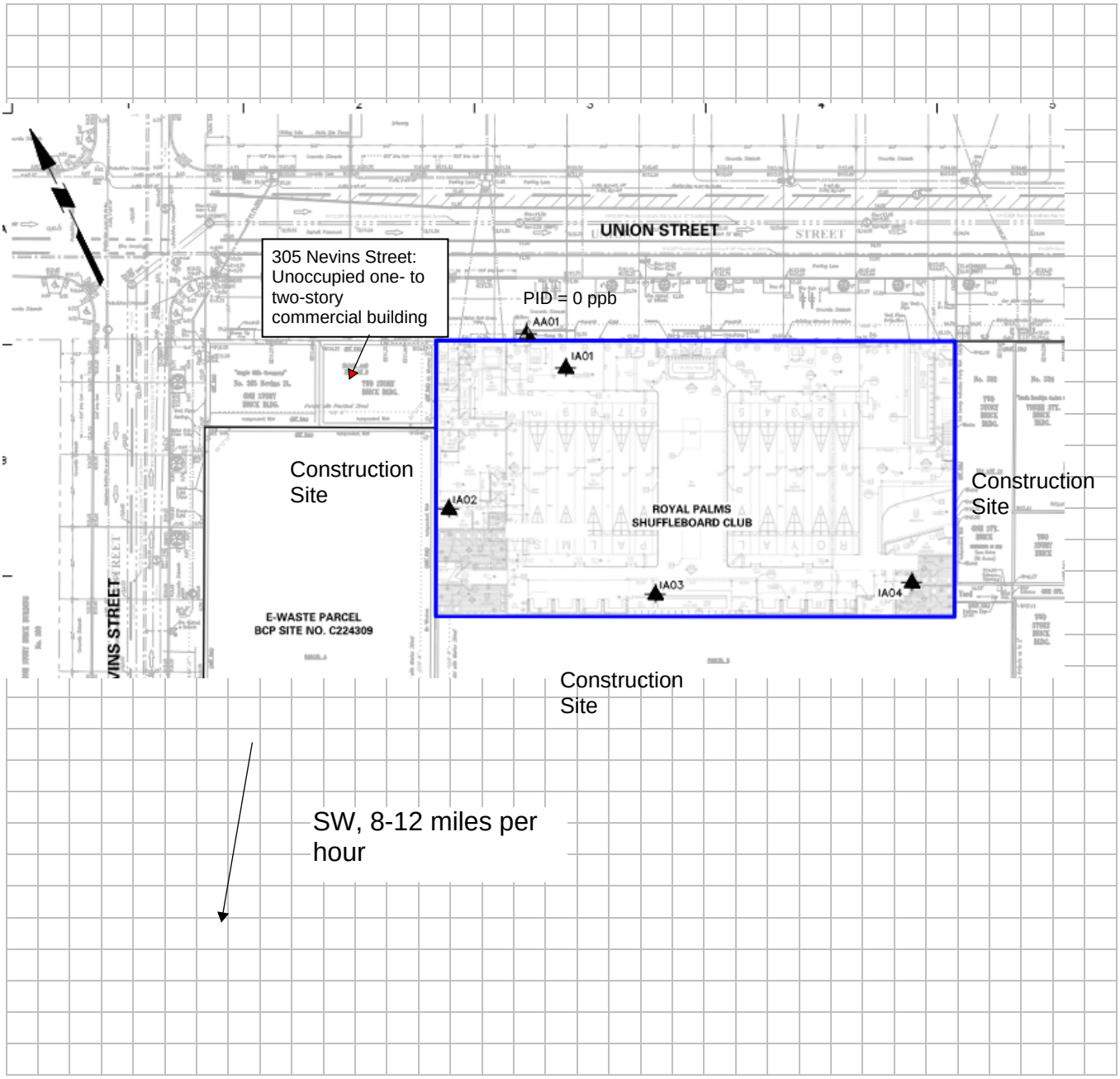

PID = photoionization detector

ppb = parts per billion

13. Product Inventory Form - Continued

Site Name: 514 Union Street
Site Location: Brooklyn, New York
Langan Project No.: 170361307
Date: 3/20/2025

Make and model of field instrument used: ppbRAE 3000

Location	Product Description	Size (units)	Condition*	Chemical Ingredients	Field Instrument Reading (ppb)	Photo Y/N
Bar/Staircase	Carpenter's Wood Glue	(1) 16 fl oz	Good, opened U	glyoxal, boric acid	160	Y
	Carpenter's Wood Glue Max	(1) 16 fl oz	Good, opened U	ethyl cyanoacrylate, poly(methyl methacrylate)	162	Y
	Instant Gum Cutter	(1) 13 oz	Good, opened U	acetone, toulene, xylene, mixed isonomers, carbon dioxide, methanol, ethylbenzene	1868	Y
	Coil Cleaner	(1) 19 oz	Good, opened U	2-butoxyethanol, propane, butane, secondary alcohol ethoxylate	163	Y
	Insualting Foam Sealant	(1) 12 oz	Good, opened U	diphenylmethane diisocyanate, 4,4' - methylenediphenyl diisocyanate, polymethylenepolyphenylisocyanate, propoxylated glycerin polymer, polymethylenepolyphenyl polyisocyanate, polypropyleneglycol copolymer, isobutane, paraffin waxes and hydrocarbon waxes chlorinated, tris(1-chloro-2-propyl) phosphate, methyl ether, propane	271	Y
	Ice Machine Cleaner & Descaler	(1) 16 fl oz	Good, opened U	citric acid	65	Y
	Air Conditioner Foaming Cleaner Heavy Duty Detergent	(1) 19 oz	Good, opened U	isobutane, propane, ethylene glycol monobutyl ether	102	Y
	All Purpose Silicone Sealant	(1) 10.1 fl oz	Good, opened U	silicon dioxide	77	Y
	Windex	(2) 23 fl oz	Good, 1 opened U, 1	titanium dioxide, ethylene glycol, diuron	190	Y
Second Floor Bulkhead	Dyco Silicone Acrylic	(8) 5 Gallons	Good, opened U	acrylic resin, aromatic hydrocarbon, titanium dioxide, acetone, xylene	195	Y
	Seal Krete	(2) 1 Gallon	Good, opened U	2,2,4-Trimethyl-1,3-Pentanediol Monoisobutyrate, 1,3,5-Triazine-1,3,5(2H,4H,6H)-Triethanol, 5-Chloro-2-Methyl-4-Isothiazolin-3-one Mixture with 2-Methyl-4-Isothiazolin-3-one	191	Y
	Arizona Gold	(3) 1 Liter	Good, opened U	acrylic polymer product	191	Y
	Jasco Muriatic Acid	(4) 1 Liter	Good, opened U	Hydrochloric acid based	191	Y
	Regal Select Paint	(9) 3.43 Liters	Good, opened U	titanium dioxide, kaolin, silica amorphous, sodium C14-C16 olefin sulfonate	211	Y
	Roman Wallpaper Adhesive	(3) 1 Gallon	Good, opened U	glycerol	210	Y
	Zinsser Bulls Eye 1-2-3 Primer	(2) 5 Gallons	Good, opened U	Acetaldehyde, calcium carbonate, distillates, petroleum, ethylene glycol, methylchoroisothiazoline, methylisothiazoline, silica,sodium nitrite, zinc oxide, talc, titanium oxide	264	Y
	Krylon Clakboard Paint	(4) 29 Fl oz.	Good, opened U	Acetone, Propane, n-Butyl Acetate, Butane, 2-Propoxyethanol, Amorphous Precipitated Silica, Xylene, mixed isomers, Titanium Dioxide, Zirconium 2-Ethylhexanoate, Methyl Ethyl Ketoxime,Carbon Black, Light Aromatic Hydrocarbons, Cobalt 2-Ethylhexanoate, Hydrotreated Heavy Petroleum Naphtha, trimethylbenzene	218	Y
	Sysco Reliance Bleach	(7) 1 Gallon	Good, opened U	Sodium hypochlorate	322	Y
	Sysco Reliance Liquid Hand Soap	(9) 1 Gallon	Good, opened U	Sodium poly(oxyethylene) dodecyl ether sulfate gyderin, sodium chloride, alklamidopropylbetaines, sulfuric acid, salts, ethanol	230	Y
	Valspar Porch, Floor and Patio Latex Paint	(12+) 31 fl oz	Good, opened U	Titanium oxide, heavy paraffinic oil	218	Y
	Benjamin Moore Stays Clear Acrylic Polyeurethane	(8+) 1 Gallon	Good, opened U	Water, polyeurethane acrylic polymer, coalescing agent, dipropylene glycol monomethyl ether, actylic copolymer	210	Y

* Describe the condition of the product containers as Unopened (UO), Used (U), or Deteriorated (D).

13. Product Inventory Form - Continued

Location	Product Description	Size (units)	Condition*	Chemical Ingredients	Field Instrument Reading (ppb)	Photo Y/N
	Behr Premium Floor Coating	(2) 1 Gallon	Good, unopened UO	titanium dioxide, ethylene glycol, diuron	210	Y
	Used Paint Brushes/Rollers/Bucket	NA	U	Paint	97	Y
	Rust-Oleum Metallic Spray Paint	(10) 11 oz	Opened, U	Acetone, propoane, n-butane, n-butyl acetate, barium sulfate, xylenones, dimethyl carbonate, naptha, petroleum hydrotreated light, carbon black, propylene glycol monobutyl ether, ethylbenzene, solvent naphtha light aromatic, n-heptane, octane, zirconium 2-ethylhexanoate, cobalt 2-ethylhexanoate, naphtha hydtortreated heavy, ziconium acetate	285	Y
	USG All Purpose Joint Compound	(2) 3.5 qt	Good, opened U	Limestone, attapulgite, perlite	115	Y
	APOC 264 Elastomeric Roof Patch	(2) 1 Gallon	Good, opened U	Titanium dioxide, limestone	108	Y
	Weber Odorless Turpenoid	(1) 0.5 Pint	Good, opened U	Naptha (petroleum), heavy alkylate (mineral spirits odorless)	340	Y
	Fabuloso Multi-Purpose Cleaner	(2) 1 Gallon	Good, opened U	Sodium dodecyl, benzene sulfonate, 2-Phenoxyethanol, sodium sulfate	210	Y
Office	Nella Seal Shuffleboard Court Wax	(6) 1 Gallon	Good, uopened UO	Mineral Spirits	135	Y
	Clean Revolution Foaming Hand Soap	(1) 1 Gallon	Good, opened U	Water, sodium C14-16 Sulfonate, Glycerin, capryl/decyl glucoside, Cocamidopropyl betaine, lauramidopropylamine oxide, myristamidopropylamine oxide, bis-PEG-19 Methyl ether dimethyl silane, sodium benzoate, tetrasodium glutamate, diacetate, sodium chloride, citric acid, gyceryl oleate	222	Y
	Brake Parts Cleaner	(1) 14 oz	Good, opened U	acetone, carbon dioxide, toluene	210	Y
	WD-40	(2) 8 oz	Good, opened U	aliphatic hydrocarbon, petroleum base oil, carbon dioxide	254	Y
	Wood Glue	(1) 18 fl oz	Good, opened U	water, vinyl acetate polymer, aluminum chloride, hexahydrate, 2-propanol, 1-phenoxy-	184	Y
	Rust-Oleum Matte Spray	(1) 12 oz	Good, opened U	acetone, propane, naphtha, n-butane, hydrous magnesium silicate, xylenes (o-, m-, p- isomers), hydrotreatedlLight distillate, dimethyl carbonate, titanium dioxide, propylene glycol monobutyl ether, ethylbenzene, ethylene glycol monobutyl ether	270	Y
	Silicone Sealant	(1) 10.1 fl oz	Good, opened U	%100 silicon	285	Y
	Interior Paint and Primer	(1) 116 fl oz	Good, opened U	titanium dioxide, kaolin, silica, amorphous, sodium olefin sulfonate	247	Y
	Valspar Porch, Floor and Patio Latex Paint	31 fl oz	Good, opened U	Titanium oxide, heavy paraffinic oil	242	Y
	Interior Paint and Primer	(1) 29 fl oz	Good, opened U	titanium dioxide, kaolin, silica, amorphous, sodium olefin sulfonate	291	Y
Garage	Ice Melter	(2) 50 LB	Good, 1 opened U, 1 unopened UO	sodium chloride, magnesium chloride hexahydrate	145	Y
	Dawn Dish Detergent	(7) 38 fl oz	Good, unopened UO	sulfuric acid, poly(oxy-1,2-ethanediyl), ethanol, amine oxides	285	Y
	Fabuloso Multi-Purpose Cleaner	(5) 1 Gallon	Good, 1 opened U, 4 unopened UO	Sodium dodecyl, benzene sulfonate, 2-Phenoxyethanol, sodium sulfate	234	Y
	Bleach	(2) 8 oz	Good, opened U	sodium hypochlorite	240	Y
	Liquid Hand Soap	(2) 18 fl oz	Good, 1 opened U, 1 unopened UO	sodium poly(oxyethylene) dodecyl ether sulfate, glycerin, sodum chloride, alkylamidopropylbetaines, sulfuric acid, salts, ethanol	447	Y
	Windex	(5) 1 Gallon	Good, 1 opened U, 4	titanium dioxide, ethylene glycol, diuron	289	Y
	Glass Cleaner	(1) 2.5 Gallon	Good, opened U	d-glucopyranose, oligomeric, decyl octyl glycosides	293	Y
	Toilet Bowl Cleaner Disinfectant	(1) 32 oz	Good, opened U	hydrochloric acid	309	Y

* Describe the condition of the product containers as Unopened (UO), Used (U), or Deteriorated (D).

ATTACHMENT F

ANALYTICAL LABORATORY REPORTS

Technical Report

prepared for:

Langan Engineering & Environmental Services (NYC)
21 Penn Plaza, 360 West 31st Street
New York NY, 10001
Attention: Vinicius DePaula

Report Date: 12/10/2024
Client Project ID: 170361307
York Project (SDG) No.: 24K1748

CT Cert. No. PH-0723 New Jersey Cert. No. CT005 and NY037 New York Cert. Nos. 10854 and 12058 PA Cert. No. 68-04440

120 RESEARCH DRIVE STRATFORD, CT 06615 ■ 132-02 89th AVENUE RICHMOND HILL, NY 11418
www.YORKLAB.com (203) 325-1371 FAX (203) 357-0166 ClientServices@yorklab.com

Report Date: 12/10/2024
Client Project ID: 170361307
York Project (SDG) No.: 24K1748

Langan Engineering & Environmental Services (NYC)
21 Penn Plaza, 360 West 31st Street
New York NY, 10001
Attention: Vinicius DePaula

Purpose and Results

This report contains the analytical data for the sample(s) identified on the attached chain-of-custody received in our laboratory on November 25, 2024 and listed below. The project was identified as your project: **170361307**.

The analyses were conducted utilizing appropriate EPA, Standard Methods, and ASTM methods as detailed in the data summary tables.

All samples were received in proper condition meeting the customary acceptance requirements for environmental samples except those indicated under the Sample and Analysis Qualifiers section of this report.

All analyses met the method and laboratory standard operating procedure requirements except as indicated by any data flags, the meaning of which are explained in the Sample and Data Qualifiers Relating to This Work Order section of this report and case narrative if applicable.

The results of the analyses, which are all reported on dry weight basis (soils) unless otherwise noted, are detailed in the following pages.

Please contact Client Services at 203.325.1371 with any questions regarding this report.

York Sample ID	Client Sample ID	Matrix	Date Collected	Date Received
24K1748-02	CAN 49978 / FC 17988	Air	11/22/2024	11/25/2024
24K1748-03	CAN 37386 / FC 20442	Air	11/22/2024	11/25/2024
24K1748-04	CAN 49582 / FC 20239	Air	11/22/2024	11/25/2024
24K1748-06	CAN 22080 / FC 17179	Air	11/22/2024	11/25/2024
24K1748-07	CAN 16956 / FC 19392	Air	11/22/2024	11/25/2024
24K1863-01	AA01_112624	Outdoor Ambient Ai	11/26/2024	11/26/2024
24K1863-02	IA01_112624	Indoor Ambient Air	11/26/2024	11/26/2024
24K1863-03	IA02_112624	Indoor Ambient Air	11/26/2024	11/26/2024
24K1863-04	IA03_112624	Indoor Ambient Air	11/26/2024	11/26/2024
24K1863-05	IA04_112624	Indoor Ambient Air	11/26/2024	11/26/2024

General Notes for York Project (SDG) No.: 24K1748

1. The RLs and MDLs (Reporting Limit and Method Detection Limit respectively) reported are adjusted for any dilution necessary due to the levels of target and/or non-target analytes and matrix interference. The RL(REPORTING LIMIT) is based upon the lowest standard utilized for the calibration where applicable.
2. Samples are retained for a period of thirty days after submittal of report, unless other arrangements are made.
3. York's liability for the above data is limited to the dollar value paid to York for the referenced project.
4. This report shall not be reproduced without the written approval of York Analytical Laboratories, Inc.
5. All analyses conducted met method or Laboratory SOP requirements. See the Sample and Data Qualifiers Section for further information.
6. It is noted that no analyses reported herein were subcontracted to another laboratory, unless noted in the report.
7. This report reflects results that relate only to the samples submitted on the attached chain-of-custody form(s) received by York.
8. Analyses conducted at York Analytical Laboratories, Inc. Stratford, CT are indicated by NY Cert. No. 10854; those conducted at York Analytical Laboratories, Inc., Richmond Hill, NY are indicated by NY Cert. No. 12058.

Approved By  **Date:** 12/10/2024

Cassie L. Mosher
Laboratory Manager

Sample Information

Client Sample ID: CAN 49978 / FC 17988 **York Sample ID:** 24K1748-02

York Project (SDG) No.	Client Project ID	Matrix	Collection Date/Time	Date Received
24K1748	170361307	Air	November 22, 2024 3:00 pm	11/25/2024

VOA, TO15 MASTER

Log-in Notes:

Sample Notes:

Sample Prepared by Method: EPA TO15 PREP

CAS No.	Parameter	Result	Flag	Units	Reported to LOQ	Dilution	Reference Method	Date/Time Prepared	Date/Time Analyzed	Analyst
630-20-6	* 1,1,1,2-Tetrachloroethane	ND		ug/m³	0.687	1	EPA TO-15	11/20/2024 12:00	11/20/2024 23:36	YR
							Certifications:			
71-55-6	1,1,1-Trichloroethane	ND		ug/m³	0.546	1	EPA TO-15	11/20/2024 12:00	11/20/2024 23:36	YR
							Certifications:	NELAC-NY12058,NJDEP-NY037		
79-34-5	1,1,2,2-Tetrachloroethane	ND		ug/m³	0.687	1	EPA TO-15	11/20/2024 12:00	11/20/2024 23:36	YR
							Certifications:	NELAC-NY12058,NJDEP-NY037		
76-13-1	1,1,2-Trichloro-1,2,2-trifluoroethane (Freon 113)	ND		ug/m³	0.766	1	EPA TO-15	11/20/2024 12:00	11/20/2024 23:36	YR
							Certifications:	NELAC-NY12058,NJDEP-NY037		
79-00-5	1,1,2-Trichloroethane	ND		ug/m³	0.546	1	EPA TO-15	11/20/2024 12:00	11/20/2024 23:36	YR
							Certifications:	NELAC-NY12058,NJDEP-NY037		
75-34-3	1,1-Dichloroethane	ND		ug/m³	0.405	1	EPA TO-15	11/20/2024 12:00	11/20/2024 23:36	YR
							Certifications:	NELAC-NY12058,NJDEP-NY037		
75-35-4	1,1-Dichloroethylene	ND		ug/m³	0.198	1	EPA TO-15	11/20/2024 12:00	11/20/2024 23:36	YR
							Certifications:	NELAC-NY12058,NJDEP-NY037		
120-82-1	1,2,4-Trichlorobenzene	ND	TO-CCV, TO-LCS-L	ug/m³	0.742	1	EPA TO-15	11/20/2024 12:00	11/20/2024 23:36	YR
							Certifications:	NELAC-NY12058,NJDEP-NY037		
95-63-6	1,2,4-Trimethylbenzene	ND		ug/m³	0.492	1	EPA TO-15	11/20/2024 12:00	11/20/2024 23:36	YR
							Certifications:	NELAC-NY12058,NJDEP-NY037		
106-93-4	1,2-Dibromoethane	ND		ug/m³	0.768	1	EPA TO-15	11/20/2024 12:00	11/20/2024 23:36	YR
							Certifications:	NELAC-NY12058,NJDEP-NY037		
95-50-1	1,2-Dichlorobenzene	ND		ug/m³	0.601	1	EPA TO-15	11/20/2024 12:00	11/20/2024 23:36	YR
							Certifications:	NELAC-NY12058,NJDEP-NY037		
107-06-2	1,2-Dichloroethane	ND		ug/m³	0.405	1	EPA TO-15	11/20/2024 12:00	11/20/2024 23:36	YR
							Certifications:	NELAC-NY12058,NJDEP-NY037		
78-87-5	1,2-Dichloropropane	ND		ug/m³	0.462	1	EPA TO-15	11/20/2024 12:00	11/20/2024 23:36	YR
							Certifications:	NELAC-NY12058,NJDEP-NY037		
76-14-2	1,2-Dichlorotetrafluoroethane	ND		ug/m³	0.699	1	EPA TO-15	11/20/2024 12:00	11/20/2024 23:36	YR
							Certifications:	NELAC-NY12058,NJDEP-NY037		
108-67-8	1,3,5-Trimethylbenzene	ND		ug/m³	0.492	1	EPA TO-15	11/20/2024 12:00	11/20/2024 23:36	YR
							Certifications:	NELAC-NY12058,NJDEP-NY037		
106-99-0	1,3-Butadiene	ND		ug/m³	0.664	1	EPA TO-15	11/20/2024 12:00	11/20/2024 23:36	YR
							Certifications:	NELAC-NY12058,NJDEP-NY037		
541-73-1	1,3-Dichlorobenzene	ND		ug/m³	0.601	1	EPA TO-15	11/20/2024 12:00	11/20/2024 23:36	YR
							Certifications:	NELAC-NY12058,NJDEP-NY037		
142-28-9	* 1,3-Dichloropropane	ND		ug/m³	0.462	1	EPA TO-15	11/20/2024 12:00	11/20/2024 23:36	YR
							Certifications:			
106-46-7	1,4-Dichlorobenzene	ND		ug/m³	0.601	1	EPA TO-15	11/20/2024 12:00	11/20/2024 23:36	YR
							Certifications:	NELAC-NY12058,NJDEP-NY037		
123-91-1	1,4-Dioxane	ND	TO-CCV	ug/m³	0.721	1	EPA TO-15	11/20/2024 12:00	11/20/2024 23:36	YR
							Certifications:	NELAC-NY12058,NJDEP-NY037		

Sample Information

Client Sample ID: CAN 49978 / FC 17988 **York Sample ID:** 24K1748-02

York Project (SDG) No.	Client Project ID	Matrix	Collection Date/Time	Date Received
24K1748	170361307	Air	November 22, 2024 3:00 pm	11/25/2024

VOA, TO15 MASTER

Log-in Notes:

Sample Notes:

Sample Prepared by Method: EPA TO15 PREP

CAS No.	Parameter	Result	Flag	Units	Reported to LOQ	Dilution	Reference Method	Date/Time Prepared	Date/Time Analyzed	Analyst
78-93-3	2-Butanone	ND		ug/m³	0.295	1	EPA TO-15 Certifications: NELAC-NY12058,NJDEP-NY037	11/20/2024 12:00	11/20/2024 23:36	YR
591-78-6	* 2-Hexanone	ND	TO-CCV	ug/m³	0.819	1	EPA TO-15 Certifications:	11/20/2024 12:00	11/20/2024 23:36	YR
107-05-1	3-Chloropropene	ND		ug/m³	1.57	1	EPA TO-15 Certifications: NELAC-NY12058,NJDEP-NY037	11/20/2024 12:00	11/20/2024 23:36	YR
108-10-1	4-Methyl-2-pentanone	ND		ug/m³	0.410	1	EPA TO-15 Certifications: NELAC-NY12058,NJDEP-NY037	11/20/2024 12:00	11/20/2024 23:36	YR
67-64-1	**Acetone**	**0.736**		ug/m³	0.475	1	EPA TO-15 Certifications: NELAC-NY12058,NJDEP-NY037	11/20/2024 12:00	11/20/2024 23:36	YR
107-13-1	Acrylonitrile	ND		ug/m³	0.217	1	EPA TO-15 Certifications: NELAC-NY12058,NJDEP-NY037	11/20/2024 12:00	11/20/2024 23:36	YR
71-43-2	Benzene	ND		ug/m³	0.319	1	EPA TO-15 Certifications: NELAC-NY12058,NJDEP-NY037	11/20/2024 12:00	11/20/2024 23:36	YR
100-44-7	Benzyl chloride	ND		ug/m³	0.518	1	EPA TO-15 Certifications: NELAC-NY12058,NJDEP-NY037	11/20/2024 12:00	11/20/2024 23:36	YR
75-27-4	Bromodichloromethane	ND		ug/m³	0.670	1	EPA TO-15 Certifications: NELAC-NY12058,NJDEP-NY037	11/20/2024 12:00	11/20/2024 23:36	YR
75-25-2	Bromoform	ND	ICVE, TO-LCS-L	ug/m³	1.03	1	EPA TO-15 Certifications: NELAC-NY12058,NJDEP-NY037	11/20/2024 12:00	11/20/2024 23:36	YR
74-83-9	Bromomethane	ND		ug/m³	0.388	1	EPA TO-15 Certifications: NELAC-NY12058,NJDEP-NY037	11/20/2024 12:00	11/20/2024 23:36	YR
75-15-0	Carbon disulfide	ND		ug/m³	0.311	1	EPA TO-15 Certifications: NELAC-NY12058,NJDEP-NY037	11/20/2024 12:00	11/20/2024 23:36	YR
56-23-5	Carbon tetrachloride	ND		ug/m³	0.157	1	EPA TO-15 Certifications: NELAC-NY12058,NJDEP-NY037	11/20/2024 12:00	11/20/2024 23:36	YR
108-90-7	Chlorobenzene	ND		ug/m³	0.460	1	EPA TO-15 Certifications: NELAC-NY12058,NJDEP-NY037	11/20/2024 12:00	11/20/2024 23:36	YR
75-00-3	Chloroethane	ND		ug/m³	0.264	1	EPA TO-15 Certifications: NELAC-NY12058,NJDEP-NY037	11/20/2024 12:00	11/20/2024 23:36	YR
67-66-3	Chloroform	ND		ug/m³	0.488	1	EPA TO-15 Certifications: NELAC-NY12058,NJDEP-NY037	11/20/2024 12:00	11/20/2024 23:36	YR
74-87-3	Chloromethane	ND		ug/m³	0.207	1	EPA TO-15 Certifications: NELAC-NY12058,NJDEP-NY037	11/20/2024 12:00	11/20/2024 23:36	YR
156-59-2	cis-1,2-Dichloroethylene	ND		ug/m³	0.198	1	EPA TO-15 Certifications: NELAC-NY12058,NJDEP-NY037	11/20/2024 12:00	11/20/2024 23:36	YR
10061-01-5	cis-1,3-Dichloropropylene	ND		ug/m³	0.454	1	EPA TO-15 Certifications: NELAC-NY12058,NJDEP-NY037	11/20/2024 12:00	11/20/2024 23:36	YR
110-82-7	Cyclohexane	ND		ug/m³	0.344	1	EPA TO-15 Certifications: NELAC-NY12058,NJDEP-NY037	11/20/2024 12:00	11/20/2024 23:36	YR
124-48-1	Dibromochloromethane	ND	ICVE, TO-LCS-L	ug/m³	0.852	1	EPA TO-15 Certifications: NELAC-NY12058,NJDEP-NY037	11/20/2024 12:00	11/20/2024 23:36	YR

Sample Information

Client Sample ID: CAN 49978 / FC 17988 **York Sample ID:** 24K1748-02

York Project (SDG) No.	Client Project ID	Matrix	Collection Date/Time	Date Received
24K1748	170361307	Air	November 22, 2024 3:00 pm	11/25/2024

VOA, TO15 MASTER

Log-in Notes:

Sample Notes:

Sample Prepared by Method: EPA TO15 PREP

CAS No.	Parameter	Result	Flag	Units	Reported to LOQ	Dilution	Reference Method	Date/Time Prepared	Date/Time Analyzed	Analyst
75-71-8	Dichlorodifluoromethane	ND		ug/m³	0.495	1	EPA TO-15	11/20/2024 12:00	11/20/2024 23:36	YR
							Certifications: NELAC-NY12058,NJDEP-NY037			
141-78-6	* Ethyl acetate	ND		ug/m³	0.721	1	EPA TO-15	11/20/2024 12:00	11/20/2024 23:36	YR
							Certifications:			
100-41-4	Ethyl Benzene	ND		ug/m³	0.434	1	EPA TO-15	11/20/2024 12:00	11/20/2024 23:36	YR
							Certifications: NELAC-NY12058,NJDEP-NY037			
87-68-3	Hexachlorobutadiene	ND		ug/m³	1.07	1	EPA TO-15	11/20/2024 12:00	11/20/2024 23:36	YR
							Certifications: NELAC-NY12058,NJDEP-NY037			
67-63-0	Isopropanol	ND		ug/m³	0.492	1	EPA TO-15	11/20/2024 12:00	11/20/2024 23:36	YR
							Certifications: NELAC-NY12058,NJDEP-NY037			
80-62-6	Methyl Methacrylate	ND		ug/m³	0.409	1	EPA TO-15	11/20/2024 12:00	11/20/2024 23:36	YR
							Certifications: NELAC-NY12058,NJDEP-NY037			
1634-04-4	Methyl tert-butyl ether (MTBE)	ND		ug/m³	0.361	1	EPA TO-15	11/20/2024 12:00	11/20/2024 23:36	YR
							Certifications: NELAC-NY12058,NJDEP-NY037			
75-09-2	Methylene chloride	ND		ug/m³	0.695	1	EPA TO-15	11/20/2024 12:00	11/20/2024 23:36	YR
							Certifications: NELAC-NY12058,NJDEP-NY037			
142-82-5	n-Heptane	ND		ug/m³	0.410	1	EPA TO-15	11/20/2024 12:00	11/20/2024 23:36	YR
							Certifications: NELAC-NY12058,NJDEP-NY037			
110-54-3	n-Hexane	ND		ug/m³	0.352	1	EPA TO-15	11/20/2024 12:00	11/20/2024 23:36	YR
							Certifications: NELAC-NY12058,NJDEP-NY037			
95-47-6	o-Xylene	ND		ug/m³	0.434	1	EPA TO-15	11/20/2024 12:00	11/20/2024 23:36	YR
							Certifications: NELAC-NY12058,NJDEP-NY037			
179601-23-1	p- & m- Xylenes	ND		ug/m³	0.868	1	EPA TO-15	11/20/2024 12:00	11/20/2024 23:36	YR
							Certifications: NELAC-NY12058,NJDEP-NY037			
622-96-8	* p-Ethyltoluene	ND		ug/m³	0.492	1	EPA TO-15	11/20/2024 12:00	11/20/2024 23:36	YR
							Certifications:			
115-07-1	* Propylene	ND		ug/m³	0.172	1	EPA TO-15	11/20/2024 12:00	11/20/2024 23:36	YR
							Certifications:			
100-42-5	Styrene	ND		ug/m³	0.426	1	EPA TO-15	11/20/2024 12:00	11/20/2024 23:36	YR
							Certifications: NELAC-NY12058,NJDEP-NY037			
127-18-4	Tetrachloroethylene	ND		ug/m³	0.678	1	EPA TO-15	11/20/2024 12:00	11/20/2024 23:36	YR
							Certifications: NELAC-NY12058,NJDEP-NY037			
109-99-9	* Tetrahydrofuran	ND		ug/m³	0.590	1	EPA TO-15	11/20/2024 12:00	11/20/2024 23:36	YR
							Certifications:			
108-88-3	Toluene	ND		ug/m³	0.377	1	EPA TO-15	11/20/2024 12:00	11/20/2024 23:36	YR
							Certifications: NELAC-NY12058,NJDEP-NY037			
156-60-5	trans-1,2-Dichloroethylene	ND		ug/m³	0.396	1	EPA TO-15	11/20/2024 12:00	11/20/2024 23:36	YR
							Certifications: NELAC-NY12058,NJDEP-NY037			
10061-02-6	trans-1,3-Dichloropropylene	ND		ug/m³	0.454	1	EPA TO-15	11/20/2024 12:00	11/20/2024 23:36	YR
							Certifications: NELAC-NY12058,NJDEP-NY037			
79-01-6	Trichloroethylene	ND		ug/m³	0.134	1	EPA TO-15	11/20/2024 12:00	11/20/2024 23:36	YR
							Certifications: NELAC-NY12058,NJDEP-NY037			
75-69-4	Trichlorofluoromethane (Freon 11)	ND		ug/m³	0.562	1	EPA TO-15	11/20/2024 12:00	11/20/2024 23:36	YR
							Certifications: NELAC-NY12058,NJDEP-NY037			

Sample Information

Client Sample ID: CAN 49978 / FC 17988 **York Sample ID:** 24K1748-02

York Project (SDG) No.	Client Project ID	Matrix	Collection Date/Time	Date Received
24K1748	170361307	Air	November 22, 2024 3:00 pm	11/25/2024

VOA, TO15 MASTER

Log-in Notes:

Sample Notes:

Sample Prepared by Method: EPA TO15 PREP

CAS No.	Parameter	Result	Flag	Units	Reported to LOQ	Dilution	Reference Method	Date/Time Prepared	Date/Time Analyzed	Analyst
108-05-4	Vinyl acetate	ND	ICVE, TO-LCS -L	ug/m³	0.352	1	EPA TO-15	11/20/2024 12:00	11/20/2024 23:36	YR
							Certifications:	NELAC-NY12058,NJDEP-NY037		
593-60-2	Vinyl bromide	ND		ug/m³	0.437	1	EPA TO-15	11/20/2024 12:00	11/20/2024 23:36	YR
							Certifications:	NELAC-NY12058,NJDEP-NY037		
75-01-4	Vinyl Chloride	ND		ug/m³	0.128	1	EPA TO-15	11/20/2024 12:00	11/20/2024 23:36	YR
							Certifications:	NELAC-NY12058,NJDEP-NY037		

Sample Information

Client Sample ID: CAN 37386 / FC 20442 **York Sample ID:** 24K1748-03

York Project (SDG) No.	Client Project ID	Matrix	Collection Date/Time	Date Received
24K1748	170361307	Air	November 22, 2024 3:00 pm	11/25/2024

VOA, TO15 MASTER

Log-in Notes:

Sample Notes:

Sample Prepared by Method: EPA TO15 PREP

CAS No.	Parameter	Result	Flag	Units	Reported to LOQ	Dilution	Reference Method	Date/Time Prepared	Date/Time Analyzed	Analyst
630-20-6	* 1,1,1,2-Tetrachloroethane	ND		ug/m³	0.687	1	EPA TO-15 Certifications:	11/20/2024 12:00	11/21/2024 00:17	YR
71-55-6	1,1,1-Trichloroethane	ND		ug/m³	0.546	1	EPA TO-15 Certifications: NELAC-NY12058,NJDEP-NY037	11/20/2024 12:00	11/21/2024 00:17	YR
79-34-5	1,1,2,2-Tetrachloroethane	ND		ug/m³	0.687	1	EPA TO-15 Certifications: NELAC-NY12058,NJDEP-NY037	11/20/2024 12:00	11/21/2024 00:17	YR
76-13-1	1,1,2-Trichloro-1,2,2-trifluoroethane (Freon 113)	ND		ug/m³	0.766	1	EPA TO-15 Certifications: NELAC-NY12058,NJDEP-NY037	11/20/2024 12:00	11/21/2024 00:17	YR
79-00-5	1,1,2-Trichloroethane	ND		ug/m³	0.546	1	EPA TO-15 Certifications: NELAC-NY12058,NJDEP-NY037	11/20/2024 12:00	11/21/2024 00:17	YR
75-34-3	1,1-Dichloroethane	ND		ug/m³	0.405	1	EPA TO-15 Certifications: NELAC-NY12058,NJDEP-NY037	11/20/2024 12:00	11/21/2024 00:17	YR
75-35-4	1,1-Dichloroethylene	ND		ug/m³	0.198	1	EPA TO-15 Certifications: NELAC-NY12058,NJDEP-NY037	11/20/2024 12:00	11/21/2024 00:17	YR
120-82-1	1,2,4-Trichlorobenzene	ND	TO-CCV, TO-LCS-L	ug/m³	0.742	1	EPA TO-15 Certifications: NELAC-NY12058,NJDEP-NY037	11/20/2024 12:00	11/21/2024 00:17	YR
95-63-6	1,2,4-Trimethylbenzene	ND		ug/m³	0.492	1	EPA TO-15 Certifications: NELAC-NY12058,NJDEP-NY037	11/20/2024 12:00	11/21/2024 00:17	YR
106-93-4	1,2-Dibromoethane	ND		ug/m³	0.768	1	EPA TO-15 Certifications: NELAC-NY12058,NJDEP-NY037	11/20/2024 12:00	11/21/2024 00:17	YR
95-50-1	1,2-Dichlorobenzene	ND		ug/m³	0.601	1	EPA TO-15 Certifications: NELAC-NY12058,NJDEP-NY037	11/20/2024 12:00	11/21/2024 00:17	YR
107-06-2	1,2-Dichloroethane	ND		ug/m³	0.405	1	EPA TO-15 Certifications: NELAC-NY12058,NJDEP-NY037	11/20/2024 12:00	11/21/2024 00:17	YR
78-87-5	1,2-Dichloropropane	ND		ug/m³	0.462	1	EPA TO-15 Certifications: NELAC-NY12058,NJDEP-NY037	11/20/2024 12:00	11/21/2024 00:17	YR
76-14-2	1,2-Dichlorotetrafluoroethane	ND		ug/m³	0.699	1	EPA TO-15 Certifications: NELAC-NY12058,NJDEP-NY037	11/20/2024 12:00	11/21/2024 00:17	YR
108-67-8	1,3,5-Trimethylbenzene	ND		ug/m³	0.492	1	EPA TO-15 Certifications: NELAC-NY12058,NJDEP-NY037	11/20/2024 12:00	11/21/2024 00:17	YR
106-99-0	1,3-Butadiene	ND		ug/m³	0.664	1	EPA TO-15 Certifications: NELAC-NY12058,NJDEP-NY037	11/20/2024 12:00	11/21/2024 00:17	YR
541-73-1	1,3-Dichlorobenzene	ND		ug/m³	0.601	1	EPA TO-15 Certifications: NELAC-NY12058,NJDEP-NY037	11/20/2024 12:00	11/21/2024 00:17	YR
142-28-9	* 1,3-Dichloropropane	ND		ug/m³	0.462	1	EPA TO-15 Certifications:	11/20/2024 12:00	11/21/2024 00:17	YR
106-46-7	1,4-Dichlorobenzene	ND		ug/m³	0.601	1	EPA TO-15 Certifications: NELAC-NY12058,NJDEP-NY037	11/20/2024 12:00	11/21/2024 00:17	YR
123-91-1	1,4-Dioxane	ND	TO-CCV	ug/m³	0.721	1	EPA TO-15 Certifications: NELAC-NY12058,NJDEP-NY037	11/20/2024 12:00	11/21/2024 00:17	YR
78-93-3	2-Butanone	ND		ug/m³	0.295	1	EPA TO-15 Certifications: NELAC-NY12058,NJDEP-NY037	11/20/2024 12:00	11/21/2024 00:17	YR

Sample Information

Client Sample ID: CAN 37386 / FC 20442 **York Sample ID:** 24K1748-03

York Project (SDG) No.	Client Project ID	Matrix	Collection Date/Time	Date Received
24K1748	170361307	Air	November 22, 2024 3:00 pm	11/25/2024

VOA, TO15 MASTER

Log-in Notes:

Sample Notes:

Sample Prepared by Method: EPA TO15 PREP

CAS No.	Parameter	Result	Flag	Units	Reported to LOQ	Dilution	Reference Method	Date/Time Prepared	Date/Time Analyzed	Analyst
591-78-6	* 2-Hexanone	ND	TO-CCV	ug/m³	0.819	1	EPA TO-15 Certifications:	11/20/2024 12:00	11/21/2024 00:17	YR
107-05-1	3-Chloropropene	ND		ug/m³	1.57	1	EPA TO-15 Certifications: NELAC-NY12058,NJDEP-NY037	11/20/2024 12:00	11/21/2024 00:17	YR
108-10-1	4-Methyl-2-pentanone	ND		ug/m³	0.410	1	EPA TO-15 Certifications: NELAC-NY12058,NJDEP-NY037	11/20/2024 12:00	11/21/2024 00:17	YR
67-64-1	Acetone	ND		ug/m³	0.475	1	EPA TO-15 Certifications: NELAC-NY12058,NJDEP-NY037	11/20/2024 12:00	11/21/2024 00:17	YR
107-13-1	Acrylonitrile	ND		ug/m³	0.217	1	EPA TO-15 Certifications: NELAC-NY12058,NJDEP-NY037	11/20/2024 12:00	11/21/2024 00:17	YR
71-43-2	Benzene	ND		ug/m³	0.319	1	EPA TO-15 Certifications: NELAC-NY12058,NJDEP-NY037	11/20/2024 12:00	11/21/2024 00:17	YR
100-44-7	Benzyl chloride	ND		ug/m³	0.518	1	EPA TO-15 Certifications: NELAC-NY12058,NJDEP-NY037	11/20/2024 12:00	11/21/2024 00:17	YR
75-27-4	Bromodichloromethane	ND		ug/m³	0.670	1	EPA TO-15 Certifications: NELAC-NY12058,NJDEP-NY037	11/20/2024 12:00	11/21/2024 00:17	YR
75-25-2	Bromoform	ND	ICVE, TO-LCS-L	ug/m³	1.03	1	EPA TO-15 Certifications: NELAC-NY12058,NJDEP-NY037	11/20/2024 12:00	11/21/2024 00:17	YR
74-83-9	Bromomethane	ND		ug/m³	0.388	1	EPA TO-15 Certifications: NELAC-NY12058,NJDEP-NY037	11/20/2024 12:00	11/21/2024 00:17	YR
75-15-0	Carbon disulfide	ND		ug/m³	0.311	1	EPA TO-15 Certifications: NELAC-NY12058,NJDEP-NY037	11/20/2024 12:00	11/21/2024 00:17	YR
56-23-5	Carbon tetrachloride	ND		ug/m³	0.157	1	EPA TO-15 Certifications: NELAC-NY12058,NJDEP-NY037	11/20/2024 12:00	11/21/2024 00:17	YR
108-90-7	Chlorobenzene	ND		ug/m³	0.460	1	EPA TO-15 Certifications: NELAC-NY12058,NJDEP-NY037	11/20/2024 12:00	11/21/2024 00:17	YR
75-00-3	Chloroethane	ND		ug/m³	0.264	1	EPA TO-15 Certifications: NELAC-NY12058,NJDEP-NY037	11/20/2024 12:00	11/21/2024 00:17	YR
67-66-3	Chloroform	ND		ug/m³	0.488	1	EPA TO-15 Certifications: NELAC-NY12058,NJDEP-NY037	11/20/2024 12:00	11/21/2024 00:17	YR
74-87-3	Chloromethane	ND		ug/m³	0.207	1	EPA TO-15 Certifications: NELAC-NY12058,NJDEP-NY037	11/20/2024 12:00	11/21/2024 00:17	YR
156-59-2	cis-1,2-Dichloroethylene	ND		ug/m³	0.198	1	EPA TO-15 Certifications: NELAC-NY12058,NJDEP-NY037	11/20/2024 12:00	11/21/2024 00:17	YR
10061-01-5	cis-1,3-Dichloropropylene	ND		ug/m³	0.454	1	EPA TO-15 Certifications: NELAC-NY12058,NJDEP-NY037	11/20/2024 12:00	11/21/2024 00:17	YR
110-82-7	Cyclohexane	ND		ug/m³	0.344	1	EPA TO-15 Certifications: NELAC-NY12058,NJDEP-NY037	11/20/2024 12:00	11/21/2024 00:17	YR
124-48-1	Dibromochloromethane	ND	ICVE, TO-LCS-L	ug/m³	0.852	1	EPA TO-15 Certifications: NELAC-NY12058,NJDEP-NY037	11/20/2024 12:00	11/21/2024 00:17	YR
75-71-8	Dichlorodifluoromethane	ND		ug/m³	0.495	1	EPA TO-15 Certifications: NELAC-NY12058,NJDEP-NY037	11/20/2024 12:00	11/21/2024 00:17	YR

Sample Information

Client Sample ID: CAN 37386 / FC 20442 **York Sample ID:** 24K1748-03

York Project (SDG) No.	Client Project ID	Matrix	Collection Date/Time	Date Received
24K1748	170361307	Air	November 22, 2024 3:00 pm	11/25/2024

VOA, TO15 MASTER

Log-in Notes:

Sample Notes:

Sample Prepared by Method: EPA TO15 PREP

CAS No.	Parameter	Result	Flag	Units	Reported to LOQ	Dilution	Reference Method	Date/Time Prepared	Date/Time Analyzed	Analyst
141-78-6	* Ethyl acetate	ND		ug/m³	0.721	1	EPA TO-15	11/20/2024 12:00	11/21/2024 00:17	YR
							Certifications:			
100-41-4	Ethyl Benzene	ND		ug/m³	0.434	1	EPA TO-15	11/20/2024 12:00	11/21/2024 00:17	YR
							Certifications:	NELAC-NY12058,NJDEP-NY037		
87-68-3	Hexachlorobutadiene	ND		ug/m³	1.07	1	EPA TO-15	11/20/2024 12:00	11/21/2024 00:17	YR
							Certifications:	NELAC-NY12058,NJDEP-NY037		
67-63-0	Isopropanol	ND		ug/m³	0.492	1	EPA TO-15	11/20/2024 12:00	11/21/2024 00:17	YR
							Certifications:	NELAC-NY12058,NJDEP-NY037		
80-62-6	Methyl Methacrylate	ND		ug/m³	0.409	1	EPA TO-15	11/20/2024 12:00	11/21/2024 00:17	YR
							Certifications:	NELAC-NY12058,NJDEP-NY037		
1634-04-4	Methyl tert-butyl ether (MTBE)	ND		ug/m³	0.361	1	EPA TO-15	11/20/2024 12:00	11/21/2024 00:17	YR
							Certifications:	NELAC-NY12058,NJDEP-NY037		
75-09-2	Methylene chloride	ND		ug/m³	0.695	1	EPA TO-15	11/20/2024 12:00	11/21/2024 00:17	YR
							Certifications:	NELAC-NY12058,NJDEP-NY037		
142-82-5	n-Heptane	ND		ug/m³	0.410	1	EPA TO-15	11/20/2024 12:00	11/21/2024 00:17	YR
							Certifications:	NELAC-NY12058,NJDEP-NY037		
110-54-3	n-Hexane	ND		ug/m³	0.352	1	EPA TO-15	11/20/2024 12:00	11/21/2024 00:17	YR
							Certifications:	NELAC-NY12058,NJDEP-NY037		
95-47-6	o-Xylene	ND		ug/m³	0.434	1	EPA TO-15	11/20/2024 12:00	11/21/2024 00:17	YR
							Certifications:	NELAC-NY12058,NJDEP-NY037		
179601-23-1	p- & m- Xylenes	ND		ug/m³	0.868	1	EPA TO-15	11/20/2024 12:00	11/21/2024 00:17	YR
							Certifications:	NELAC-NY12058,NJDEP-NY037		
622-96-8	* p-Ethyltoluene	ND		ug/m³	0.492	1	EPA TO-15	11/20/2024 12:00	11/21/2024 00:17	YR
							Certifications:			
115-07-1	* Propylene	ND		ug/m³	0.172	1	EPA TO-15	11/20/2024 12:00	11/21/2024 00:17	YR
							Certifications:			
100-42-5	Styrene	ND		ug/m³	0.426	1	EPA TO-15	11/20/2024 12:00	11/21/2024 00:17	YR
							Certifications:	NELAC-NY12058,NJDEP-NY037		
127-18-4	Tetrachloroethylene	ND		ug/m³	0.678	1	EPA TO-15	11/20/2024 12:00	11/21/2024 00:17	YR
							Certifications:	NELAC-NY12058,NJDEP-NY037		
109-99-9	* Tetrahydrofuran	ND		ug/m³	0.590	1	EPA TO-15	11/20/2024 12:00	11/21/2024 00:17	YR
							Certifications:			
108-88-3	Toluene	ND		ug/m³	0.377	1	EPA TO-15	11/20/2024 12:00	11/21/2024 00:17	YR
							Certifications:	NELAC-NY12058,NJDEP-NY037		
156-60-5	trans-1,2-Dichloroethylene	ND		ug/m³	0.396	1	EPA TO-15	11/20/2024 12:00	11/21/2024 00:17	YR
							Certifications:	NELAC-NY12058,NJDEP-NY037		
10061-02-6	trans-1,3-Dichloropropylene	ND		ug/m³	0.454	1	EPA TO-15	11/20/2024 12:00	11/21/2024 00:17	YR
							Certifications:	NELAC-NY12058,NJDEP-NY037		
79-01-6	Trichloroethylene	ND		ug/m³	0.134	1	EPA TO-15	11/20/2024 12:00	11/21/2024 00:17	YR
							Certifications:	NELAC-NY12058,NJDEP-NY037		
75-69-4	Trichlorofluoromethane (Freon 11)	ND		ug/m³	0.562	1	EPA TO-15	11/20/2024 12:00	11/21/2024 00:17	YR
							Certifications:	NELAC-NY12058,NJDEP-NY037		

Sample Information

Client Sample ID: CAN 37386 / FC 20442 **York Sample ID:** 24K1748-03

York Project (SDG) No.	Client Project ID	Matrix	Collection Date/Time	Date Received
24K1748	170361307	Air	November 22, 2024 3:00 pm	11/25/2024

VOA, TO15 MASTER

Log-in Notes:

Sample Notes:

Sample Prepared by Method: EPA TO15 PREP

CAS No.	Parameter	Result	Flag	Units	Reported to LOQ	Dilution	Reference Method	Date/Time Prepared	Date/Time Analyzed	Analyst
108-05-4	Vinyl acetate	ND	ICVE, TO-LCS -L	ug/m³	0.352	1	EPA TO-15	11/20/2024 12:00	11/21/2024 00:17	YR
							Certifications:	NELAC-NY12058,NJDEP-NY037		
593-60-2	Vinyl bromide	ND		ug/m³	0.437	1	EPA TO-15	11/20/2024 12:00	11/21/2024 00:17	YR
							Certifications:	NELAC-NY12058,NJDEP-NY037		
75-01-4	Vinyl Chloride	ND		ug/m³	0.128	1	EPA TO-15	11/20/2024 12:00	11/21/2024 00:17	YR
							Certifications:	NELAC-NY12058,NJDEP-NY037		

Sample Information

Client Sample ID: CAN 49582 / FC 20239 **York Sample ID:** 24K1748-04

York Project (SDG) No.	Client Project ID	Matrix	Collection Date/Time	Date Received
24K1748	170361307	Air	November 22, 2024 3:00 pm	11/25/2024

VOA, TO15 MASTER

Log-in Notes:

Sample Notes:

Sample Prepared by Method: EPA TO15 PREP

CAS No.	Parameter	Result	Flag	Units	Reported to LOQ	Dilution	Reference Method	Date/Time Prepared	Date/Time Analyzed	Analyst
630-20-6	* 1,1,1,2-Tetrachloroethane	ND		ug/m³	0.687	1	EPA TO-15 Certifications:	11/20/2024 12:00	11/21/2024 00:58	YR
71-55-6	1,1,1-Trichloroethane	ND		ug/m³	0.546	1	EPA TO-15 Certifications: NELAC-NY12058,NJDEP-NY037	11/20/2024 12:00	11/21/2024 00:58	YR
79-34-5	1,1,2,2-Tetrachloroethane	ND		ug/m³	0.687	1	EPA TO-15 Certifications: NELAC-NY12058,NJDEP-NY037	11/20/2024 12:00	11/21/2024 00:58	YR
76-13-1	1,1,2-Trichloro-1,2,2-trifluoroethane (Freon 113)	ND		ug/m³	0.766	1	EPA TO-15 Certifications: NELAC-NY12058,NJDEP-NY037	11/20/2024 12:00	11/21/2024 00:58	YR
79-00-5	1,1,2-Trichloroethane	ND		ug/m³	0.546	1	EPA TO-15 Certifications: NELAC-NY12058,NJDEP-NY037	11/20/2024 12:00	11/21/2024 00:58	YR
75-34-3	1,1-Dichloroethane	ND		ug/m³	0.405	1	EPA TO-15 Certifications: NELAC-NY12058,NJDEP-NY037	11/20/2024 12:00	11/21/2024 00:58	YR
75-35-4	1,1-Dichloroethylene	ND		ug/m³	0.198	1	EPA TO-15 Certifications: NELAC-NY12058,NJDEP-NY037	11/20/2024 12:00	11/21/2024 00:58	YR
120-82-1	1,2,4-Trichlorobenzene	ND	TO-CCV, TO-LCS-L	ug/m³	0.742	1	EPA TO-15 Certifications: NELAC-NY12058,NJDEP-NY037	11/20/2024 12:00	11/21/2024 00:58	YR
95-63-6	1,2,4-Trimethylbenzene	ND		ug/m³	0.492	1	EPA TO-15 Certifications: NELAC-NY12058,NJDEP-NY037	11/20/2024 12:00	11/21/2024 00:58	YR
106-93-4	1,2-Dibromoethane	ND		ug/m³	0.768	1	EPA TO-15 Certifications: NELAC-NY12058,NJDEP-NY037	11/20/2024 12:00	11/21/2024 00:58	YR
95-50-1	1,2-Dichlorobenzene	ND		ug/m³	0.601	1	EPA TO-15 Certifications: NELAC-NY12058,NJDEP-NY037	11/20/2024 12:00	11/21/2024 00:58	YR
107-06-2	1,2-Dichloroethane	ND		ug/m³	0.405	1	EPA TO-15 Certifications: NELAC-NY12058,NJDEP-NY037	11/20/2024 12:00	11/21/2024 00:58	YR
78-87-5	1,2-Dichloropropane	ND		ug/m³	0.462	1	EPA TO-15 Certifications: NELAC-NY12058,NJDEP-NY037	11/20/2024 12:00	11/21/2024 00:58	YR
76-14-2	1,2-Dichlorotetrafluoroethane	ND		ug/m³	0.699	1	EPA TO-15 Certifications: NELAC-NY12058,NJDEP-NY037	11/20/2024 12:00	11/21/2024 00:58	YR
108-67-8	1,3,5-Trimethylbenzene	ND		ug/m³	0.492	1	EPA TO-15 Certifications: NELAC-NY12058,NJDEP-NY037	11/20/2024 12:00	11/21/2024 00:58	YR
106-99-0	1,3-Butadiene	ND		ug/m³	0.664	1	EPA TO-15 Certifications: NELAC-NY12058,NJDEP-NY037	11/20/2024 12:00	11/21/2024 00:58	YR
541-73-1	1,3-Dichlorobenzene	ND		ug/m³	0.601	1	EPA TO-15 Certifications: NELAC-NY12058,NJDEP-NY037	11/20/2024 12:00	11/21/2024 00:58	YR
142-28-9	* 1,3-Dichloropropane	ND		ug/m³	0.462	1	EPA TO-15 Certifications:	11/20/2024 12:00	11/21/2024 00:58	YR
106-46-7	1,4-Dichlorobenzene	ND		ug/m³	0.601	1	EPA TO-15 Certifications: NELAC-NY12058,NJDEP-NY037	11/20/2024 12:00	11/21/2024 00:58	YR
123-91-1	1,4-Dioxane	ND	TO-CCV	ug/m³	0.721	1	EPA TO-15 Certifications: NELAC-NY12058,NJDEP-NY037	11/20/2024 12:00	11/21/2024 00:58	YR
78-93-3	2-Butanone	ND		ug/m³	0.295	1	EPA TO-15 Certifications: NELAC-NY12058,NJDEP-NY037	11/20/2024 12:00	11/21/2024 00:58	YR

Sample Information

Client Sample ID: CAN 49582 / FC 20239 **York Sample ID:** 24K1748-04

York Project (SDG) No.	Client Project ID	Matrix	Collection Date/Time	Date Received
24K1748	170361307	Air	November 22, 2024 3:00 pm	11/25/2024

VOA, TO15 MASTER

Log-in Notes:

Sample Notes:

Sample Prepared by Method: EPA TO15 PREP

CAS No.	Parameter	Result	Flag	Units	Reported to LOQ	Dilution	Reference Method	Date/Time Prepared	Date/Time Analyzed	Analyst
591-78-6	* 2-Hexanone	ND	TO-CCV	ug/m³	0.819	1	EPA TO-15 Certifications:	11/20/2024 12:00	11/21/2024 00:58	YR
107-05-1	3-Chloropropene	ND		ug/m³	1.57	1	EPA TO-15 Certifications: NELAC-NY12058,NJDEP-NY037	11/20/2024 12:00	11/21/2024 00:58	YR
108-10-1	4-Methyl-2-pentanone	ND		ug/m³	0.410	1	EPA TO-15 Certifications: NELAC-NY12058,NJDEP-NY037	11/20/2024 12:00	11/21/2024 00:58	YR
67-64-1	Acetone	ND		ug/m³	0.475	1	EPA TO-15 Certifications: NELAC-NY12058,NJDEP-NY037	11/20/2024 12:00	11/21/2024 00:58	YR
107-13-1	**Acrylonitrile**	**0.217**		ug/m³	0.217	1	EPA TO-15 Certifications: NELAC-NY12058,NJDEP-NY037	11/20/2024 12:00	11/21/2024 00:58	YR
71-43-2	Benzene	ND		ug/m³	0.319	1	EPA TO-15 Certifications: NELAC-NY12058,NJDEP-NY037	11/20/2024 12:00	11/21/2024 00:58	YR
100-44-7	Benzyl chloride	ND		ug/m³	0.518	1	EPA TO-15 Certifications: NELAC-NY12058,NJDEP-NY037	11/20/2024 12:00	11/21/2024 00:58	YR
75-27-4	Bromodichloromethane	ND		ug/m³	0.670	1	EPA TO-15 Certifications: NELAC-NY12058,NJDEP-NY037	11/20/2024 12:00	11/21/2024 00:58	YR
75-25-2	Bromoform	ND	ICVE, TO-LCS-L	ug/m³	1.03	1	EPA TO-15 Certifications: NELAC-NY12058,NJDEP-NY037	11/20/2024 12:00	11/21/2024 00:58	YR
74-83-9	Bromomethane	ND		ug/m³	0.388	1	EPA TO-15 Certifications: NELAC-NY12058,NJDEP-NY037	11/20/2024 12:00	11/21/2024 00:58	YR
75-15-0	Carbon disulfide	ND		ug/m³	0.311	1	EPA TO-15 Certifications: NELAC-NY12058,NJDEP-NY037	11/20/2024 12:00	11/21/2024 00:58	YR
56-23-5	Carbon tetrachloride	ND		ug/m³	0.157	1	EPA TO-15 Certifications: NELAC-NY12058,NJDEP-NY037	11/20/2024 12:00	11/21/2024 00:58	YR
108-90-7	Chlorobenzene	ND		ug/m³	0.460	1	EPA TO-15 Certifications: NELAC-NY12058,NJDEP-NY037	11/20/2024 12:00	11/21/2024 00:58	YR
75-00-3	Chloroethane	ND		ug/m³	0.264	1	EPA TO-15 Certifications: NELAC-NY12058,NJDEP-NY037	11/20/2024 12:00	11/21/2024 00:58	YR
67-66-3	Chloroform	ND		ug/m³	0.488	1	EPA TO-15 Certifications: NELAC-NY12058,NJDEP-NY037	11/20/2024 12:00	11/21/2024 00:58	YR
74-87-3	Chloromethane	ND		ug/m³	0.207	1	EPA TO-15 Certifications: NELAC-NY12058,NJDEP-NY037	11/20/2024 12:00	11/21/2024 00:58	YR
156-59-2	cis-1,2-Dichloroethylene	ND		ug/m³	0.198	1	EPA TO-15 Certifications: NELAC-NY12058,NJDEP-NY037	11/20/2024 12:00	11/21/2024 00:58	YR
10061-01-5	cis-1,3-Dichloropropylene	ND		ug/m³	0.454	1	EPA TO-15 Certifications: NELAC-NY12058,NJDEP-NY037	11/20/2024 12:00	11/21/2024 00:58	YR
110-82-7	Cyclohexane	ND		ug/m³	0.344	1	EPA TO-15 Certifications: NELAC-NY12058,NJDEP-NY037	11/20/2024 12:00	11/21/2024 00:58	YR
124-48-1	Dibromochloromethane	ND	ICVE, TO-LCS-L	ug/m³	0.852	1	EPA TO-15 Certifications: NELAC-NY12058,NJDEP-NY037	11/20/2024 12:00	11/21/2024 00:58	YR
75-71-8	Dichlorodifluoromethane	ND		ug/m³	0.495	1	EPA TO-15 Certifications: NELAC-NY12058,NJDEP-NY037	11/20/2024 12:00	11/21/2024 00:58	YR

Sample Information

Client Sample ID: CAN 49582 / FC 20239 **York Sample ID:** 24K1748-04

York Project (SDG) No.	Client Project ID	Matrix	Collection Date/Time	Date Received
24K1748	170361307	Air	November 22, 2024 3:00 pm	11/25/2024

VOA, TO15 MASTER

Log-in Notes:

Sample Notes:

Sample Prepared by Method: EPA TO15 PREP

CAS No.	Parameter	Result	Flag	Units	Reported to LOQ	Dilution	Reference Method	Date/Time Prepared	Date/Time Analyzed	Analyst
141-78-6	* Ethyl acetate	ND		ug/m³	0.721	1	EPA TO-15	11/20/2024 12:00	11/21/2024 00:58	YR
							Certifications:			
100-41-4	Ethyl Benzene	ND		ug/m³	0.434	1	EPA TO-15	11/20/2024 12:00	11/21/2024 00:58	YR
							Certifications:	NELAC-NY12058,NJDEP-NY037		
87-68-3	Hexachlorobutadiene	ND		ug/m³	1.07	1	EPA TO-15	11/20/2024 12:00	11/21/2024 00:58	YR
							Certifications:	NELAC-NY12058,NJDEP-NY037		
67-63-0	Isopropanol	ND		ug/m³	0.492	1	EPA TO-15	11/20/2024 12:00	11/21/2024 00:58	YR
							Certifications:	NELAC-NY12058,NJDEP-NY037		
80-62-6	Methyl Methacrylate	ND		ug/m³	0.409	1	EPA TO-15	11/20/2024 12:00	11/21/2024 00:58	YR
							Certifications:	NELAC-NY12058,NJDEP-NY037		
1634-04-4	Methyl tert-butyl ether (MTBE)	ND		ug/m³	0.361	1	EPA TO-15	11/20/2024 12:00	11/21/2024 00:58	YR
							Certifications:	NELAC-NY12058,NJDEP-NY037		
75-09-2	Methylene chloride	ND		ug/m³	0.695	1	EPA TO-15	11/20/2024 12:00	11/21/2024 00:58	YR
							Certifications:	NELAC-NY12058,NJDEP-NY037		
142-82-5	n-Heptane	ND		ug/m³	0.410	1	EPA TO-15	11/20/2024 12:00	11/21/2024 00:58	YR
							Certifications:	NELAC-NY12058,NJDEP-NY037		
110-54-3	n-Hexane	ND		ug/m³	0.352	1	EPA TO-15	11/20/2024 12:00	11/21/2024 00:58	YR
							Certifications:	NELAC-NY12058,NJDEP-NY037		
95-47-6	o-Xylene	ND		ug/m³	0.434	1	EPA TO-15	11/20/2024 12:00	11/21/2024 00:58	YR
							Certifications:	NELAC-NY12058,NJDEP-NY037		
179601-23-1	p- & m- Xylenes	ND		ug/m³	0.868	1	EPA TO-15	11/20/2024 12:00	11/21/2024 00:58	YR
							Certifications:	NELAC-NY12058,NJDEP-NY037		
622-96-8	* p-Ethyltoluene	ND		ug/m³	0.492	1	EPA TO-15	11/20/2024 12:00	11/21/2024 00:58	YR
							Certifications:			
115-07-1	* Propylene	ND		ug/m³	0.172	1	EPA TO-15	11/20/2024 12:00	11/21/2024 00:58	YR
							Certifications:			
100-42-5	Styrene	ND		ug/m³	0.426	1	EPA TO-15	11/20/2024 12:00	11/21/2024 00:58	YR
							Certifications:	NELAC-NY12058,NJDEP-NY037		
127-18-4	Tetrachloroethylene	ND		ug/m³	0.678	1	EPA TO-15	11/20/2024 12:00	11/21/2024 00:58	YR
							Certifications:	NELAC-NY12058,NJDEP-NY037		
109-99-9	* Tetrahydrofuran	ND		ug/m³	0.590	1	EPA TO-15	11/20/2024 12:00	11/21/2024 00:58	YR
							Certifications:			
108-88-3	Toluene	ND		ug/m³	0.377	1	EPA TO-15	11/20/2024 12:00	11/21/2024 00:58	YR
							Certifications:	NELAC-NY12058,NJDEP-NY037		
156-60-5	trans-1,2-Dichloroethylene	ND		ug/m³	0.396	1	EPA TO-15	11/20/2024 12:00	11/21/2024 00:58	YR
							Certifications:	NELAC-NY12058,NJDEP-NY037		
10061-02-6	trans-1,3-Dichloropropylene	ND		ug/m³	0.454	1	EPA TO-15	11/20/2024 12:00	11/21/2024 00:58	YR
							Certifications:	NELAC-NY12058,NJDEP-NY037		
79-01-6	Trichloroethylene	ND		ug/m³	0.134	1	EPA TO-15	11/20/2024 12:00	11/21/2024 00:58	YR
							Certifications:	NELAC-NY12058,NJDEP-NY037		
75-69-4	Trichlorofluoromethane (Freon 11)	ND		ug/m³	0.562	1	EPA TO-15	11/20/2024 12:00	11/21/2024 00:58	YR
							Certifications:	NELAC-NY12058,NJDEP-NY037		

Sample Information

Client Sample ID: CAN 49582 / FC 20239 **York Sample ID:** 24K1748-04

York Project (SDG) No.	Client Project ID	Matrix	Collection Date/Time	Date Received
24K1748	170361307	Air	November 22, 2024 3:00 pm	11/25/2024

VOA, TO15 MASTER

Log-in Notes:

Sample Notes:

Sample Prepared by Method: EPA TO15 PREP

CAS No.	Parameter	Result	Flag	Units	Reported to LOQ	Dilution	Reference Method	Date/Time Prepared	Date/Time Analyzed	Analyst
108-05-4	Vinyl acetate	ND	ICVE, TO-LCS -L	ug/m³	0.352	1	EPA TO-15	11/20/2024 12:00	11/21/2024 00:58	YR
							Certifications:	NELAC-NY12058,NJDEP-NY037		
593-60-2	Vinyl bromide	ND		ug/m³	0.437	1	EPA TO-15	11/20/2024 12:00	11/21/2024 00:58	YR
							Certifications:	NELAC-NY12058,NJDEP-NY037		
75-01-4	Vinyl Chloride	ND		ug/m³	0.128	1	EPA TO-15	11/20/2024 12:00	11/21/2024 00:58	YR
							Certifications:	NELAC-NY12058,NJDEP-NY037		

Sample Information

Client Sample ID: CAN 22080 / FC 17179 **York Sample ID:** 24K1748-06

York Project (SDG) No.	Client Project ID	Matrix	Collection Date/Time	Date Received
24K1748	170361307	Air	November 22, 2024 3:00 pm	11/25/2024

VOA, TO15 MASTER

Log-in Notes:

Sample Notes:

Sample Prepared by Method: EPA TO15 PREP

CAS No.	Parameter	Result	Flag	Units	Reported to LOQ	Dilution	Reference Method	Date/Time Prepared	Date/Time Analyzed	Analyst
630-20-6	* 1,1,1,2-Tetrachloroethane	ND		ug/m³	0.687	1	EPA TO-15 Certifications:	11/20/2024 12:00	11/21/2024 03:01	YR
71-55-6	1,1,1-Trichloroethane	ND		ug/m³	0.546	1	EPA TO-15 Certifications: NELAC-NY12058,NJDEP-NY037	11/20/2024 12:00	11/21/2024 03:01	YR
79-34-5	1,1,2,2-Tetrachloroethane	ND		ug/m³	0.687	1	EPA TO-15 Certifications: NELAC-NY12058,NJDEP-NY037	11/20/2024 12:00	11/21/2024 03:01	YR
76-13-1	1,1,2-Trichloro-1,2,2-trifluoroethane (Freon 113)	ND		ug/m³	0.766	1	EPA TO-15 Certifications: NELAC-NY12058,NJDEP-NY037	11/20/2024 12:00	11/21/2024 03:01	YR
79-00-5	1,1,2-Trichloroethane	ND		ug/m³	0.546	1	EPA TO-15 Certifications: NELAC-NY12058,NJDEP-NY037	11/20/2024 12:00	11/21/2024 03:01	YR
75-34-3	1,1-Dichloroethane	ND		ug/m³	0.405	1	EPA TO-15 Certifications: NELAC-NY12058,NJDEP-NY037	11/20/2024 12:00	11/21/2024 03:01	YR
75-35-4	1,1-Dichloroethylene	ND		ug/m³	0.198	1	EPA TO-15 Certifications: NELAC-NY12058,NJDEP-NY037	11/20/2024 12:00	11/21/2024 03:01	YR
120-82-1	1,2,4-Trichlorobenzene	ND	TO-CCV, TO-LCS-L	ug/m³	0.742	1	EPA TO-15 Certifications: NELAC-NY12058,NJDEP-NY037	11/20/2024 12:00	11/21/2024 03:01	YR
95-63-6	1,2,4-Trimethylbenzene	ND		ug/m³	0.492	1	EPA TO-15 Certifications: NELAC-NY12058,NJDEP-NY037	11/20/2024 12:00	11/21/2024 03:01	YR
106-93-4	1,2-Dibromoethane	ND		ug/m³	0.768	1	EPA TO-15 Certifications: NELAC-NY12058,NJDEP-NY037	11/20/2024 12:00	11/21/2024 03:01	YR
95-50-1	1,2-Dichlorobenzene	ND		ug/m³	0.601	1	EPA TO-15 Certifications: NELAC-NY12058,NJDEP-NY037	11/20/2024 12:00	11/21/2024 03:01	YR
107-06-2	1,2-Dichloroethane	ND		ug/m³	0.405	1	EPA TO-15 Certifications: NELAC-NY12058,NJDEP-NY037	11/20/2024 12:00	11/21/2024 03:01	YR
78-87-5	1,2-Dichloropropane	ND		ug/m³	0.462	1	EPA TO-15 Certifications: NELAC-NY12058,NJDEP-NY037	11/20/2024 12:00	11/21/2024 03:01	YR
76-14-2	1,2-Dichlorotetrafluoroethane	ND		ug/m³	0.699	1	EPA TO-15 Certifications: NELAC-NY12058,NJDEP-NY037	11/20/2024 12:00	11/21/2024 03:01	YR
108-67-8	1,3,5-Trimethylbenzene	ND		ug/m³	0.492	1	EPA TO-15 Certifications: NELAC-NY12058,NJDEP-NY037	11/20/2024 12:00	11/21/2024 03:01	YR
106-99-0	1,3-Butadiene	ND		ug/m³	0.664	1	EPA TO-15 Certifications: NELAC-NY12058,NJDEP-NY037	11/20/2024 12:00	11/21/2024 03:01	YR
541-73-1	1,3-Dichlorobenzene	ND		ug/m³	0.601	1	EPA TO-15 Certifications: NELAC-NY12058,NJDEP-NY037	11/20/2024 12:00	11/21/2024 03:01	YR
142-28-9	* 1,3-Dichloropropane	ND		ug/m³	0.462	1	EPA TO-15 Certifications:	11/20/2024 12:00	11/21/2024 03:01	YR
106-46-7	1,4-Dichlorobenzene	ND		ug/m³	0.601	1	EPA TO-15 Certifications: NELAC-NY12058,NJDEP-NY037	11/20/2024 12:00	11/21/2024 03:01	YR
123-91-1	1,4-Dioxane	ND	TO-CCV	ug/m³	0.721	1	EPA TO-15 Certifications: NELAC-NY12058,NJDEP-NY037	11/20/2024 12:00	11/21/2024 03:01	YR
78-93-3	2-Butanone	ND		ug/m³	0.295	1	EPA TO-15 Certifications: NELAC-NY12058,NJDEP-NY037	11/20/2024 12:00	11/21/2024 03:01	YR

Sample Information

Client Sample ID: CAN 22080 / FC 17179 **York Sample ID:** 24K1748-06

York Project (SDG) No.	Client Project ID	Matrix	Collection Date/Time	Date Received
24K1748	170361307	Air	November 22, 2024 3:00 pm	11/25/2024

VOA, TO15 MASTER

Log-in Notes:

Sample Notes:

Sample Prepared by Method: EPA TO15 PREP

CAS No.	Parameter	Result	Flag	Units	Reported to LOQ	Dilution	Reference Method	Date/Time Prepared	Date/Time Analyzed	Analyst
591-78-6	* 2-Hexanone	ND	TO-CCV	ug/m³	0.819	1	EPA TO-15	11/20/2024 12:00	11/21/2024 03:01	YR
							Certifications:			
107-05-1	3-Chloropropene	ND		ug/m³	1.57	1	EPA TO-15	11/20/2024 12:00	11/21/2024 03:01	YR
							Certifications: NELAC-NY12058,NJDEP-NY037			
108-10-1	4-Methyl-2-pentanone	ND		ug/m³	0.410	1	EPA TO-15	11/20/2024 12:00	11/21/2024 03:01	YR
							Certifications: NELAC-NY12058,NJDEP-NY037			
67-64-1	Acetone	ND		ug/m³	0.475	1	EPA TO-15	11/20/2024 12:00	11/21/2024 03:01	YR
							Certifications: NELAC-NY12058,NJDEP-NY037			
107-13-1	Acrylonitrile	ND		ug/m³	0.217	1	EPA TO-15	11/20/2024 12:00	11/21/2024 03:01	YR
							Certifications: NELAC-NY12058,NJDEP-NY037			
71-43-2	Benzene	ND		ug/m³	0.319	1	EPA TO-15	11/20/2024 12:00	11/21/2024 03:01	YR
							Certifications: NELAC-NY12058,NJDEP-NY037			
100-44-7	Benzyl chloride	ND		ug/m³	0.518	1	EPA TO-15	11/20/2024 12:00	11/21/2024 03:01	YR
							Certifications: NELAC-NY12058,NJDEP-NY037			
75-27-4	Bromodichloromethane	ND		ug/m³	0.670	1	EPA TO-15	11/20/2024 12:00	11/21/2024 03:01	YR
							Certifications: NELAC-NY12058,NJDEP-NY037			
75-25-2	Bromoform	ND	ICVE, TO-LCS-L	ug/m³	1.03	1	EPA TO-15	11/20/2024 12:00	11/21/2024 03:01	YR
							Certifications: NELAC-NY12058,NJDEP-NY037			
74-83-9	Bromomethane	ND		ug/m³	0.388	1	EPA TO-15	11/20/2024 12:00	11/21/2024 03:01	YR
							Certifications: NELAC-NY12058,NJDEP-NY037			
75-15-0	Carbon disulfide	ND		ug/m³	0.311	1	EPA TO-15	11/20/2024 12:00	11/21/2024 03:01	YR
							Certifications: NELAC-NY12058,NJDEP-NY037			
56-23-5	Carbon tetrachloride	ND		ug/m³	0.157	1	EPA TO-15	11/20/2024 12:00	11/21/2024 03:01	YR
							Certifications: NELAC-NY12058,NJDEP-NY037			
108-90-7	Chlorobenzene	ND		ug/m³	0.460	1	EPA TO-15	11/20/2024 12:00	11/21/2024 03:01	YR
							Certifications: NELAC-NY12058,NJDEP-NY037			
75-00-3	Chloroethane	ND		ug/m³	0.264	1	EPA TO-15	11/20/2024 12:00	11/21/2024 03:01	YR
							Certifications: NELAC-NY12058,NJDEP-NY037			
67-66-3	Chloroform	ND		ug/m³	0.488	1	EPA TO-15	11/20/2024 12:00	11/21/2024 03:01	YR
							Certifications: NELAC-NY12058,NJDEP-NY037			
74-87-3	Chloromethane	ND		ug/m³	0.207	1	EPA TO-15	11/20/2024 12:00	11/21/2024 03:01	YR
							Certifications: NELAC-NY12058,NJDEP-NY037			
156-59-2	cis-1,2-Dichloroethylene	ND		ug/m³	0.198	1	EPA TO-15	11/20/2024 12:00	11/21/2024 03:01	YR
							Certifications: NELAC-NY12058,NJDEP-NY037			
10061-01-5	cis-1,3-Dichloropropylene	ND		ug/m³	0.454	1	EPA TO-15	11/20/2024 12:00	11/21/2024 03:01	YR
							Certifications: NELAC-NY12058,NJDEP-NY037			
110-82-7	Cyclohexane	ND		ug/m³	0.344	1	EPA TO-15	11/20/2024 12:00	11/21/2024 03:01	YR
							Certifications: NELAC-NY12058,NJDEP-NY037			
124-48-1	Dibromochloromethane	ND	ICVE, TO-LCS-L	ug/m³	0.852	1	EPA TO-15	11/20/2024 12:00	11/21/2024 03:01	YR
							Certifications: NELAC-NY12058,NJDEP-NY037			
75-71-8	Dichlorodifluoromethane	ND		ug/m³	0.495	1	EPA TO-15	11/20/2024 12:00	11/21/2024 03:01	YR
							Certifications: NELAC-NY12058,NJDEP-NY037			

Sample Information

Client Sample ID: CAN 22080 / FC 17179 **York Sample ID:** 24K1748-06

York Project (SDG) No.	Client Project ID	Matrix	Collection Date/Time	Date Received
24K1748	170361307	Air	November 22, 2024 3:00 pm	11/25/2024

VOA, TO15 MASTER

Log-in Notes:

Sample Notes:

Sample Prepared by Method: EPA TO15 PREP

CAS No.	Parameter	Result	Flag	Units	Reported to LOQ	Dilution	Reference Method	Date/Time Prepared	Date/Time Analyzed	Analyst
141-78-6	* Ethyl acetate	ND		ug/m³	0.721	1	EPA TO-15	11/20/2024 12:00	11/21/2024 03:01	YR
							Certifications:			
100-41-4	Ethyl Benzene	ND		ug/m³	0.434	1	EPA TO-15	11/20/2024 12:00	11/21/2024 03:01	YR
							Certifications:	NELAC-NY12058,NJDEP-NY037		
87-68-3	Hexachlorobutadiene	ND		ug/m³	1.07	1	EPA TO-15	11/20/2024 12:00	11/21/2024 03:01	YR
							Certifications:	NELAC-NY12058,NJDEP-NY037		
67-63-0	Isopropanol	ND		ug/m³	0.492	1	EPA TO-15	11/20/2024 12:00	11/21/2024 03:01	YR
							Certifications:	NELAC-NY12058,NJDEP-NY037		
80-62-6	Methyl Methacrylate	ND		ug/m³	0.409	1	EPA TO-15	11/20/2024 12:00	11/21/2024 03:01	YR
							Certifications:	NELAC-NY12058,NJDEP-NY037		
1634-04-4	Methyl tert-butyl ether (MTBE)	ND		ug/m³	0.361	1	EPA TO-15	11/20/2024 12:00	11/21/2024 03:01	YR
							Certifications:	NELAC-NY12058,NJDEP-NY037		
75-09-2	Methylene chloride	ND		ug/m³	0.695	1	EPA TO-15	11/20/2024 12:00	11/21/2024 03:01	YR
							Certifications:	NELAC-NY12058,NJDEP-NY037		
142-82-5	n-Heptane	ND		ug/m³	0.410	1	EPA TO-15	11/20/2024 12:00	11/21/2024 03:01	YR
							Certifications:	NELAC-NY12058,NJDEP-NY037		
110-54-3	n-Hexane	ND		ug/m³	0.352	1	EPA TO-15	11/20/2024 12:00	11/21/2024 03:01	YR
							Certifications:	NELAC-NY12058,NJDEP-NY037		
95-47-6	o-Xylene	ND		ug/m³	0.434	1	EPA TO-15	11/20/2024 12:00	11/21/2024 03:01	YR
							Certifications:	NELAC-NY12058,NJDEP-NY037		
179601-23-1	p- & m- Xylenes	ND		ug/m³	0.868	1	EPA TO-15	11/20/2024 12:00	11/21/2024 03:01	YR
							Certifications:	NELAC-NY12058,NJDEP-NY037		
622-96-8	* p-Ethyltoluene	ND		ug/m³	0.492	1	EPA TO-15	11/20/2024 12:00	11/21/2024 03:01	YR
							Certifications:			
115-07-1	* Propylene	ND		ug/m³	0.172	1	EPA TO-15	11/20/2024 12:00	11/21/2024 03:01	YR
							Certifications:			
100-42-5	Styrene	ND		ug/m³	0.426	1	EPA TO-15	11/20/2024 12:00	11/21/2024 03:01	YR
							Certifications:	NELAC-NY12058,NJDEP-NY037		
127-18-4	Tetrachloroethylene	ND		ug/m³	0.678	1	EPA TO-15	11/20/2024 12:00	11/21/2024 03:01	YR
							Certifications:	NELAC-NY12058,NJDEP-NY037		
109-99-9	* Tetrahydrofuran	ND		ug/m³	0.590	1	EPA TO-15	11/20/2024 12:00	11/21/2024 03:01	YR
							Certifications:			
108-88-3	Toluene	ND		ug/m³	0.377	1	EPA TO-15	11/20/2024 12:00	11/21/2024 03:01	YR
							Certifications:	NELAC-NY12058,NJDEP-NY037		
156-60-5	trans-1,2-Dichloroethylene	ND		ug/m³	0.396	1	EPA TO-15	11/20/2024 12:00	11/21/2024 03:01	YR
							Certifications:	NELAC-NY12058,NJDEP-NY037		
10061-02-6	trans-1,3-Dichloropropylene	ND		ug/m³	0.454	1	EPA TO-15	11/20/2024 12:00	11/21/2024 03:01	YR
							Certifications:	NELAC-NY12058,NJDEP-NY037		
79-01-6	Trichloroethylene	ND		ug/m³	0.134	1	EPA TO-15	11/20/2024 12:00	11/21/2024 03:01	YR
							Certifications:	NELAC-NY12058,NJDEP-NY037		
75-69-4	Trichlorofluoromethane (Freon 11)	ND		ug/m³	0.562	1	EPA TO-15	11/20/2024 12:00	11/21/2024 03:01	YR
							Certifications:	NELAC-NY12058,NJDEP-NY037		

Sample Information

Client Sample ID: CAN 22080 / FC 17179 **York Sample ID:** 24K1748-06

York Project (SDG) No.	Client Project ID	Matrix	Collection Date/Time	Date Received
24K1748	170361307	Air	November 22, 2024 3:00 pm	11/25/2024

VOA, TO15 MASTER

Log-in Notes:

Sample Notes:

Sample Prepared by Method: EPA TO15 PREP

CAS No.	Parameter	Result	Flag	Units	Reported to LOQ	Dilution	Reference Method	Date/Time Prepared	Date/Time Analyzed	Analyst
108-05-4	Vinyl acetate	ND	ICVE, TO-LCS -L	ug/m³	0.352	1	EPA TO-15	11/20/2024 12:00	11/21/2024 03:01	YR
							Certifications:	NELAC-NY12058,NJDEP-NY037		
593-60-2	Vinyl bromide	ND		ug/m³	0.437	1	EPA TO-15	11/20/2024 12:00	11/21/2024 03:01	YR
							Certifications:	NELAC-NY12058,NJDEP-NY037		
75-01-4	Vinyl Chloride	ND		ug/m³	0.128	1	EPA TO-15	11/20/2024 12:00	11/21/2024 03:01	YR
							Certifications:	NELAC-NY12058,NJDEP-NY037		

Sample Information

Client Sample ID: CAN 16956 / FC 19392 **York Sample ID:** 24K1748-07

York Project (SDG) No.	Client Project ID	Matrix	Collection Date/Time	Date Received
24K1748	170361307	Air	November 22, 2024 3:00 pm	11/25/2024

VOA, TO15 MASTER

Log-in Notes:

Sample Notes:

Sample Prepared by Method: EPA TO15 PREP

CAS No.	Parameter	Result	Flag	Units	Reported to LOQ	Dilution	Reference Method	Date/Time Prepared	Date/Time Analyzed	Analyst
630-20-6	* 1,1,1,2-Tetrachloroethane	ND		ug/m³	0.687	1	EPA TO-15 Certifications:	11/20/2024 12:00	11/21/2024 11:27	YR
71-55-6	1,1,1-Trichloroethane	ND		ug/m³	0.546	1	EPA TO-15 Certifications: NELAC-NY12058,NJDEP-NY037	11/20/2024 12:00	11/21/2024 11:27	YR
79-34-5	1,1,2,2-Tetrachloroethane	ND		ug/m³	0.687	1	EPA TO-15 Certifications: NELAC-NY12058,NJDEP-NY037	11/20/2024 12:00	11/21/2024 11:27	YR
76-13-1	1,1,2-Trichloro-1,2,2-trifluoroethane (Freon 113)	ND		ug/m³	0.766	1	EPA TO-15 Certifications: NELAC-NY12058,NJDEP-NY037	11/20/2024 12:00	11/21/2024 11:27	YR
79-00-5	1,1,2-Trichloroethane	ND		ug/m³	0.546	1	EPA TO-15 Certifications: NELAC-NY12058,NJDEP-NY037	11/20/2024 12:00	11/21/2024 11:27	YR
75-34-3	1,1-Dichloroethane	ND		ug/m³	0.405	1	EPA TO-15 Certifications: NELAC-NY12058,NJDEP-NY037	11/20/2024 12:00	11/21/2024 11:27	YR
75-35-4	1,1-Dichloroethylene	ND		ug/m³	0.198	1	EPA TO-15 Certifications: NELAC-NY12058,NJDEP-NY037	11/20/2024 12:00	11/21/2024 11:27	YR
120-82-1	1,2,4-Trichlorobenzene	ND	TO-CCV, TO-LCS-L	ug/m³	0.742	1	EPA TO-15 Certifications: NELAC-NY12058,NJDEP-NY037	11/20/2024 12:00	11/21/2024 11:27	YR
95-63-6	1,2,4-Trimethylbenzene	ND		ug/m³	0.492	1	EPA TO-15 Certifications: NELAC-NY12058,NJDEP-NY037	11/20/2024 12:00	11/21/2024 11:27	YR
106-93-4	1,2-Dibromoethane	ND		ug/m³	0.768	1	EPA TO-15 Certifications: NELAC-NY12058,NJDEP-NY037	11/20/2024 12:00	11/21/2024 11:27	YR
95-50-1	1,2-Dichlorobenzene	ND		ug/m³	0.601	1	EPA TO-15 Certifications: NELAC-NY12058,NJDEP-NY037	11/20/2024 12:00	11/21/2024 11:27	YR
107-06-2	1,2-Dichloroethane	ND		ug/m³	0.405	1	EPA TO-15 Certifications: NELAC-NY12058,NJDEP-NY037	11/20/2024 12:00	11/21/2024 11:27	YR
78-87-5	1,2-Dichloropropane	ND		ug/m³	0.462	1	EPA TO-15 Certifications: NELAC-NY12058,NJDEP-NY037	11/20/2024 12:00	11/21/2024 11:27	YR
76-14-2	1,2-Dichlorotetrafluoroethane	ND		ug/m³	0.699	1	EPA TO-15 Certifications: NELAC-NY12058,NJDEP-NY037	11/20/2024 12:00	11/21/2024 11:27	YR
108-67-8	1,3,5-Trimethylbenzene	ND		ug/m³	0.492	1	EPA TO-15 Certifications: NELAC-NY12058,NJDEP-NY037	11/20/2024 12:00	11/21/2024 11:27	YR
106-99-0	1,3-Butadiene	ND		ug/m³	0.664	1	EPA TO-15 Certifications: NELAC-NY12058,NJDEP-NY037	11/20/2024 12:00	11/21/2024 11:27	YR
541-73-1	1,3-Dichlorobenzene	ND		ug/m³	0.601	1	EPA TO-15 Certifications: NELAC-NY12058,NJDEP-NY037	11/20/2024 12:00	11/21/2024 11:27	YR
142-28-9	* 1,3-Dichloropropane	ND		ug/m³	0.462	1	EPA TO-15 Certifications:	11/20/2024 12:00	11/21/2024 11:27	YR
106-46-7	1,4-Dichlorobenzene	ND		ug/m³	0.601	1	EPA TO-15 Certifications: NELAC-NY12058,NJDEP-NY037	11/20/2024 12:00	11/21/2024 11:27	YR
123-91-1	1,4-Dioxane	ND	TO-CCV	ug/m³	0.721	1	EPA TO-15 Certifications: NELAC-NY12058,NJDEP-NY037	11/20/2024 12:00	11/21/2024 11:27	YR
78-93-3	2-Butanone	ND		ug/m³	0.295	1	EPA TO-15 Certifications: NELAC-NY12058,NJDEP-NY037	11/20/2024 12:00	11/21/2024 11:27	YR

Sample Information

Client Sample ID: CAN 16956 / FC 19392 **York Sample ID:** 24K1748-07

York Project (SDG) No.	Client Project ID	Matrix	Collection Date/Time	Date Received
24K1748	170361307	Air	November 22, 2024 3:00 pm	11/25/2024

VOA, TO15 MASTER

Log-in Notes:

Sample Notes:

Sample Prepared by Method: EPA TO15 PREP

CAS No.	Parameter	Result	Flag	Units	Reported to LOQ	Dilution	Reference Method	Date/Time Prepared	Date/Time Analyzed	Analyst
591-78-6	* 2-Hexanone	ND	TO-CCV	ug/m³	0.819	1	EPA TO-15	11/20/2024 12:00	11/21/2024 11:27	YR
							Certifications:			
107-05-1	3-Chloropropene	ND		ug/m³	1.57	1	EPA TO-15	11/20/2024 12:00	11/21/2024 11:27	YR
							Certifications: NELAC-NY12058,NJDEP-NY037			
108-10-1	4-Methyl-2-pentanone	ND		ug/m³	0.410	1	EPA TO-15	11/20/2024 12:00	11/21/2024 11:27	YR
							Certifications: NELAC-NY12058,NJDEP-NY037			
67-64-1	Acetone	ND		ug/m³	0.475	1	EPA TO-15	11/20/2024 12:00	11/21/2024 11:27	YR
							Certifications: NELAC-NY12058,NJDEP-NY037			
107-13-1	Acrylonitrile	ND		ug/m³	0.217	1	EPA TO-15	11/20/2024 12:00	11/21/2024 11:27	YR
							Certifications: NELAC-NY12058,NJDEP-NY037			
71-43-2	Benzene	ND		ug/m³	0.319	1	EPA TO-15	11/20/2024 12:00	11/21/2024 11:27	YR
							Certifications: NELAC-NY12058,NJDEP-NY037			
100-44-7	Benzyl chloride	ND		ug/m³	0.518	1	EPA TO-15	11/20/2024 12:00	11/21/2024 11:27	YR
							Certifications: NELAC-NY12058,NJDEP-NY037			
75-27-4	Bromodichloromethane	ND		ug/m³	0.670	1	EPA TO-15	11/20/2024 12:00	11/21/2024 11:27	YR
							Certifications: NELAC-NY12058,NJDEP-NY037			
75-25-2	Bromoform	ND	ICVE, TO-LCS-L	ug/m³	1.03	1	EPA TO-15	11/20/2024 12:00	11/21/2024 11:27	YR
							Certifications: NELAC-NY12058,NJDEP-NY037			
74-83-9	Bromomethane	ND		ug/m³	0.388	1	EPA TO-15	11/20/2024 12:00	11/21/2024 11:27	YR
							Certifications: NELAC-NY12058,NJDEP-NY037			
75-15-0	Carbon disulfide	ND		ug/m³	0.311	1	EPA TO-15	11/20/2024 12:00	11/21/2024 11:27	YR
							Certifications: NELAC-NY12058,NJDEP-NY037			
56-23-5	Carbon tetrachloride	ND		ug/m³	0.157	1	EPA TO-15	11/20/2024 12:00	11/21/2024 11:27	YR
							Certifications: NELAC-NY12058,NJDEP-NY037			
108-90-7	Chlorobenzene	ND		ug/m³	0.460	1	EPA TO-15	11/20/2024 12:00	11/21/2024 11:27	YR
							Certifications: NELAC-NY12058,NJDEP-NY037			
75-00-3	Chloroethane	ND		ug/m³	0.264	1	EPA TO-15	11/20/2024 12:00	11/21/2024 11:27	YR
							Certifications: NELAC-NY12058,NJDEP-NY037			
67-66-3	Chloroform	ND		ug/m³	0.488	1	EPA TO-15	11/20/2024 12:00	11/21/2024 11:27	YR
							Certifications: NELAC-NY12058,NJDEP-NY037			
74-87-3	Chloromethane	ND		ug/m³	0.207	1	EPA TO-15	11/20/2024 12:00	11/21/2024 11:27	YR
							Certifications: NELAC-NY12058,NJDEP-NY037			
156-59-2	cis-1,2-Dichloroethylene	ND		ug/m³	0.198	1	EPA TO-15	11/20/2024 12:00	11/21/2024 11:27	YR
							Certifications: NELAC-NY12058,NJDEP-NY037			
10061-01-5	cis-1,3-Dichloropropylene	ND		ug/m³	0.454	1	EPA TO-15	11/20/2024 12:00	11/21/2024 11:27	YR
							Certifications: NELAC-NY12058,NJDEP-NY037			
110-82-7	Cyclohexane	ND		ug/m³	0.344	1	EPA TO-15	11/20/2024 12:00	11/21/2024 11:27	YR
							Certifications: NELAC-NY12058,NJDEP-NY037			
124-48-1	Dibromochloromethane	ND	ICVE, TO-LCS-L	ug/m³	0.852	1	EPA TO-15	11/20/2024 12:00	11/21/2024 11:27	YR
							Certifications: NELAC-NY12058,NJDEP-NY037			
75-71-8	Dichlorodifluoromethane	ND		ug/m³	0.495	1	EPA TO-15	11/20/2024 12:00	11/21/2024 11:27	YR
							Certifications: NELAC-NY12058,NJDEP-NY037			

Sample Information

Client Sample ID: CAN 16956 / FC 19392 **York Sample ID:** 24K1748-07

York Project (SDG) No.	Client Project ID	Matrix	Collection Date/Time	Date Received
24K1748	170361307	Air	November 22, 2024 3:00 pm	11/25/2024

VOA, TO15 MASTER

Log-in Notes:

Sample Notes:

Sample Prepared by Method: EPA TO15 PREP

CAS No.	Parameter	Result	Flag	Units	Reported to LOQ	Dilution	Reference Method	Date/Time Prepared	Date/Time Analyzed	Analyst
141-78-6	* Ethyl acetate	ND		ug/m³	0.721	1	EPA TO-15	11/20/2024 12:00	11/21/2024 11:27	YR
							Certifications:			
100-41-4	Ethyl Benzene	ND		ug/m³	0.434	1	EPA TO-15	11/20/2024 12:00	11/21/2024 11:27	YR
							Certifications:	NELAC-NY12058,NJDEP-NY037		
87-68-3	Hexachlorobutadiene	ND		ug/m³	1.07	1	EPA TO-15	11/20/2024 12:00	11/21/2024 11:27	YR
							Certifications:	NELAC-NY12058,NJDEP-NY037		
67-63-0	Isopropanol	ND		ug/m³	0.492	1	EPA TO-15	11/20/2024 12:00	11/21/2024 11:27	YR
							Certifications:	NELAC-NY12058,NJDEP-NY037		
80-62-6	Methyl Methacrylate	ND		ug/m³	0.409	1	EPA TO-15	11/20/2024 12:00	11/21/2024 11:27	YR
							Certifications:	NELAC-NY12058,NJDEP-NY037		
1634-04-4	Methyl tert-butyl ether (MTBE)	ND		ug/m³	0.361	1	EPA TO-15	11/20/2024 12:00	11/21/2024 11:27	YR
							Certifications:	NELAC-NY12058,NJDEP-NY037		
75-09-2	Methylene chloride	ND		ug/m³	0.695	1	EPA TO-15	11/20/2024 12:00	11/21/2024 11:27	YR
							Certifications:	NELAC-NY12058,NJDEP-NY037		
142-82-5	n-Heptane	ND		ug/m³	0.410	1	EPA TO-15	11/20/2024 12:00	11/21/2024 11:27	YR
							Certifications:	NELAC-NY12058,NJDEP-NY037		
110-54-3	n-Hexane	ND		ug/m³	0.352	1	EPA TO-15	11/20/2024 12:00	11/21/2024 11:27	YR
							Certifications:	NELAC-NY12058,NJDEP-NY037		
95-47-6	o-Xylene	ND		ug/m³	0.434	1	EPA TO-15	11/20/2024 12:00	11/21/2024 11:27	YR
							Certifications:	NELAC-NY12058,NJDEP-NY037		
179601-23-1	p- & m- Xylenes	ND		ug/m³	0.868	1	EPA TO-15	11/20/2024 12:00	11/21/2024 11:27	YR
							Certifications:	NELAC-NY12058,NJDEP-NY037		
622-96-8	* p-Ethyltoluene	ND		ug/m³	0.492	1	EPA TO-15	11/20/2024 12:00	11/21/2024 11:27	YR
							Certifications:			
115-07-1	* Propylene	ND		ug/m³	0.172	1	EPA TO-15	11/20/2024 12:00	11/21/2024 11:27	YR
							Certifications:			
100-42-5	Styrene	ND		ug/m³	0.426	1	EPA TO-15	11/20/2024 12:00	11/21/2024 11:27	YR
							Certifications:	NELAC-NY12058,NJDEP-NY037		
127-18-4	Tetrachloroethylene	ND		ug/m³	0.678	1	EPA TO-15	11/20/2024 12:00	11/21/2024 11:27	YR
							Certifications:	NELAC-NY12058,NJDEP-NY037		
109-99-9	* Tetrahydrofuran	ND		ug/m³	0.590	1	EPA TO-15	11/20/2024 12:00	11/21/2024 11:27	YR
							Certifications:			
108-88-3	Toluene	ND		ug/m³	0.377	1	EPA TO-15	11/20/2024 12:00	11/21/2024 11:27	YR
							Certifications:	NELAC-NY12058,NJDEP-NY037		
156-60-5	trans-1,2-Dichloroethylene	ND		ug/m³	0.396	1	EPA TO-15	11/20/2024 12:00	11/21/2024 11:27	YR
							Certifications:	NELAC-NY12058,NJDEP-NY037		
10061-02-6	trans-1,3-Dichloropropylene	ND		ug/m³	0.454	1	EPA TO-15	11/20/2024 12:00	11/21/2024 11:27	YR
							Certifications:	NELAC-NY12058,NJDEP-NY037		
79-01-6	Trichloroethylene	ND		ug/m³	0.134	1	EPA TO-15	11/20/2024 12:00	11/21/2024 11:27	YR
							Certifications:	NELAC-NY12058,NJDEP-NY037		
75-69-4	Trichlorofluoromethane (Freon 11)	ND		ug/m³	0.562	1	EPA TO-15	11/20/2024 12:00	11/21/2024 11:27	YR
							Certifications:	NELAC-NY12058,NJDEP-NY037		

Sample Information

Client Sample ID: CAN 16956 / FC 19392 **York Sample ID:** 24K1748-07

York Project (SDG) No.	Client Project ID	Matrix	Collection Date/Time	Date Received
24K1748	170361307	Air	November 22, 2024 3:00 pm	11/25/2024

VOA, TO15 MASTER

Log-in Notes:

Sample Notes:

Sample Prepared by Method: EPA TO15 PREP

CAS No.	Parameter	Result	Flag	Units	Reported to LOQ	Dilution	Reference Method	Date/Time Prepared	Date/Time Analyzed	Analyst
108-05-4	Vinyl acetate	ND	ICVE, TO-LCS -L	ug/m³	0.352	1	EPA TO-15	11/20/2024 12:00	11/21/2024 11:27	YR
							Certifications:	NELAC-NY12058,NJDEP-NY037		
593-60-2	Vinyl bromide	ND		ug/m³	0.437	1	EPA TO-15	11/20/2024 12:00	11/21/2024 11:27	YR
							Certifications:	NELAC-NY12058,NJDEP-NY037		
75-01-4	Vinyl Chloride	ND		ug/m³	0.128	1	EPA TO-15	11/20/2024 12:00	11/21/2024 11:27	YR
							Certifications:	NELAC-NY12058,NJDEP-NY037		

Sample Information

Client Sample ID: AA01_112624 **York Sample ID:** 24K1863-01

York Project (SDG) No.	Client Project ID	Matrix	Collection Date/Time	Date Received
24K1863	170361307	Outdoor Ambient Air	November 26, 2024 8:14 am	11/26/2024

VOA, TO15 MASTER

Log-in Notes:

Sample Notes:

Sample Prepared by Method: EPA TO15 PREP

CAS No.	Parameter	Result	Flag	Units	Reported to LOQ	Dilution	Reference Method	Date/Time Prepared	Date/Time Analyzed	Analyst
630-20-6	* 1,1,1,2-Tetrachloroethane	ND		ug/m³	0.677	0.986	EPA TO-15	12/09/2024 15:41	12/10/2024 15:39	YR
							Certifications:			
71-55-6	1,1,1-Trichloroethane	ND		ug/m³	0.538	0.986	EPA TO-15	12/09/2024 15:41	12/10/2024 15:39	YR
							Certifications:	NELAC-NY12058,NJDEP-NY037		
79-34-5	1,1,2,2-Tetrachloroethane	ND		ug/m³	0.677	0.986	EPA TO-15	12/09/2024 15:41	12/10/2024 15:39	YR
							Certifications:	NELAC-NY12058,NJDEP-NY037		
76-13-1	**1,1,2-Trichloro-1,2,2-trifluoroethane (Freon 113)**	**0.756**		ug/m³	0.756	0.986	EPA TO-15	12/09/2024 15:41	12/10/2024 15:39	YR
							Certifications:	NELAC-NY12058,NJDEP-NY037		
79-00-5	1,1,2-Trichloroethane	ND		ug/m³	0.538	0.986	EPA TO-15	12/09/2024 15:41	12/10/2024 15:39	YR
							Certifications:	NELAC-NY12058,NJDEP-NY037		
75-34-3	1,1-Dichloroethane	ND		ug/m³	0.399	0.986	EPA TO-15	12/09/2024 15:41	12/10/2024 15:39	YR
							Certifications:	NELAC-NY12058,NJDEP-NY037		
75-35-4	1,1-Dichloroethylene	ND		ug/m³	0.195	0.986	EPA TO-15	12/09/2024 15:41	12/10/2024 15:39	YR
							Certifications:	NELAC-NY12058,NJDEP-NY037		
120-82-1	1,2,4-Trichlorobenzene	ND		ug/m³	0.732	0.986	EPA TO-15	12/09/2024 15:41	12/10/2024 15:39	YR
							Certifications:	NELAC-NY12058,NJDEP-NY037		
95-63-6	**1,2,4-Trimethylbenzene**	**0.824**		ug/m³	0.485	0.986	EPA TO-15	12/09/2024 15:41	12/10/2024 15:39	YR
							Certifications:	NELAC-NY12058,NJDEP-NY037		
106-93-4	1,2-Dibromoethane	ND		ug/m³	0.758	0.986	EPA TO-15	12/09/2024 15:41	12/10/2024 15:39	YR
							Certifications:	NELAC-NY12058,NJDEP-NY037		
95-50-1	1,2-Dichlorobenzene	ND		ug/m³	0.593	0.986	EPA TO-15	12/09/2024 15:41	12/10/2024 15:39	YR
							Certifications:	NELAC-NY12058,NJDEP-NY037		
107-06-2	1,2-Dichloroethane	ND		ug/m³	0.399	0.986	EPA TO-15	12/09/2024 15:41	12/10/2024 15:39	YR
							Certifications:	NELAC-NY12058,NJDEP-NY037		
78-87-5	1,2-Dichloropropane	ND		ug/m³	0.456	0.986	EPA TO-15	12/09/2024 15:41	12/10/2024 15:39	YR
							Certifications:	NELAC-NY12058,NJDEP-NY037		
76-14-2	1,2-Dichlorotetrafluoroethane	ND		ug/m³	0.689	0.986	EPA TO-15	12/09/2024 15:41	12/10/2024 15:39	YR
							Certifications:	NELAC-NY12058,NJDEP-NY037		
108-67-8	1,3,5-Trimethylbenzene	ND		ug/m³	0.485	0.986	EPA TO-15	12/09/2024 15:41	12/10/2024 15:39	YR
							Certifications:	NELAC-NY12058,NJDEP-NY037		
106-99-0	1,3-Butadiene	ND		ug/m³	0.654	0.986	EPA TO-15	12/09/2024 15:41	12/10/2024 15:39	YR
							Certifications:	NELAC-NY12058,NJDEP-NY037		
541-73-1	1,3-Dichlorobenzene	ND		ug/m³	0.593	0.986	EPA TO-15	12/09/2024 15:41	12/10/2024 15:39	YR
							Certifications:	NELAC-NY12058,NJDEP-NY037		
142-28-9	* 1,3-Dichloropropane	ND		ug/m³	0.456	0.986	EPA TO-15	12/09/2024 15:41	12/10/2024 15:39	YR
							Certifications:			
106-46-7	**1,4-Dichlorobenzene**	**0.771**		ug/m³	0.593	0.986	EPA TO-15	12/09/2024 15:41	12/10/2024 15:39	YR
							Certifications:	NELAC-NY12058,NJDEP-NY037		
123-91-1	1,4-Dioxane	ND		ug/m³	0.711	0.986	EPA TO-15	12/09/2024 15:41	12/10/2024 15:39	YR
							Certifications:	NELAC-NY12058,NJDEP-NY037		
78-93-3	**2-Butanone**	**1.74**		ug/m³	0.291	0.986	EPA TO-15	12/09/2024 15:41	12/10/2024 15:39	YR
							Certifications:	NELAC-NY12058,NJDEP-NY037		
591-78-6	* 2-Hexanone	ND		ug/m³	0.808	0.986	EPA TO-15	12/09/2024 15:41	12/10/2024 15:39	YR
							Certifications:			

Sample Information

Client Sample ID: AA01_112624 **York Sample ID:** 24K1863-01

York Project (SDG) No.	Client Project ID	Matrix	Collection Date/Time	Date Received
24K1863	170361307	Outdoor Ambient Air	November 26, 2024 8:14 am	11/26/2024

VOA, TO15 MASTER

Log-in Notes:

Sample Notes:

Sample Prepared by Method: EPA TO15 PREP

CAS No.	Parameter	Result	Flag	Units	Reported to LOQ	Dilution	Reference Method	Date/Time Prepared	Date/Time Analyzed	Analyst
107-05-1	3-Chloropropene	ND		ug/m³	1.54	0.986	EPA TO-15	12/09/2024 15:41	12/10/2024 15:39	YR
							Certifications:	NELAC-NY12058,NJDEP-NY037		
108-10-1	4-Methyl-2-pentanone	ND		ug/m³	0.404	0.986	EPA TO-15	12/09/2024 15:41	12/10/2024 15:39	YR
							Certifications:	NELAC-NY12058,NJDEP-NY037		
67-64-1	**Acetone**	**20.4**		ug/m³	1.87	0.986	EPA TO-15	12/09/2024 15:41	12/10/2024 15:39	YR
							Certifications:	NELAC-NY12058,NJDEP-NY037		
107-13-1	Acrylonitrile	ND		ug/m³	2.78	0.986	EPA TO-15	12/09/2024 15:41	12/10/2024 15:39	YR
							Certifications:	NELAC-NY12058,NJDEP-NY037		
71-43-2	**Benzene**	**1.35**		ug/m³	0.315	0.986	EPA TO-15	12/09/2024 15:41	12/10/2024 15:39	YR
							Certifications:	NELAC-NY12058,NJDEP-NY037		
100-44-7	Benzyl chloride	ND		ug/m³	0.510	0.986	EPA TO-15	12/09/2024 15:41	12/10/2024 15:39	YR
							Certifications:	NELAC-NY12058,NJDEP-NY037		
75-27-4	Bromodichloromethane	ND		ug/m³	0.661	0.986	EPA TO-15	12/09/2024 15:41	12/10/2024 15:39	YR
							Certifications:	NELAC-NY12058,NJDEP-NY037		
75-25-2	Bromoform	ND	TO-CCV	ug/m³	1.02	0.986	EPA TO-15	12/09/2024 15:41	12/10/2024 15:39	YR
							Certifications:	NELAC-NY12058,NJDEP-NY037		
74-83-9	Bromomethane	ND		ug/m³	0.383	0.986	EPA TO-15	12/09/2024 15:41	12/10/2024 15:39	YR
							Certifications:	NELAC-NY12058,NJDEP-NY037		
75-15-0	Carbon disulfide	ND		ug/m³	0.307	0.986	EPA TO-15	12/09/2024 15:41	12/10/2024 15:39	YR
							Certifications:	NELAC-NY12058,NJDEP-NY037		
56-23-5	**Carbon tetrachloride**	**0.496**		ug/m³	0.155	0.986	EPA TO-15	12/09/2024 15:41	12/10/2024 15:39	YR
							Certifications:	NELAC-NY12058,NJDEP-NY037		
108-90-7	Chlorobenzene	ND		ug/m³	0.454	0.986	EPA TO-15	12/09/2024 15:41	12/10/2024 15:39	YR
							Certifications:	NELAC-NY12058,NJDEP-NY037		
75-00-3	Chloroethane	ND		ug/m³	0.260	0.986	EPA TO-15	12/09/2024 15:41	12/10/2024 15:39	YR
							Certifications:	NELAC-NY12058,NJDEP-NY037		
67-66-3	Chloroform	ND		ug/m³	0.481	0.986	EPA TO-15	12/09/2024 15:41	12/10/2024 15:39	YR
							Certifications:	NELAC-NY12058,NJDEP-NY037		
74-87-3	**Chloromethane**	**1.65**		ug/m³	0.204	0.986	EPA TO-15	12/09/2024 15:41	12/10/2024 15:39	YR
							Certifications:	NELAC-NY12058,NJDEP-NY037		
156-59-2	cis-1,2-Dichloroethylene	ND		ug/m³	0.195	0.986	EPA TO-15	12/09/2024 15:41	12/10/2024 15:39	YR
							Certifications:	NELAC-NY12058,NJDEP-NY037		
10061-01-5	cis-1,3-Dichloropropylene	ND		ug/m³	0.448	0.986	EPA TO-15	12/09/2024 15:41	12/10/2024 15:39	YR
							Certifications:	NELAC-NY12058,NJDEP-NY037		
110-82-7	**Cyclohexane**	**0.543**		ug/m³	0.339	0.986	EPA TO-15	12/09/2024 15:41	12/10/2024 15:39	YR
							Certifications:	NELAC-NY12058,NJDEP-NY037		
124-48-1	Dibromochloromethane	ND		ug/m³	0.840	0.986	EPA TO-15	12/09/2024 15:41	12/10/2024 15:39	YR
							Certifications:	NELAC-NY12058,NJDEP-NY037		
75-71-8	**Dichlorodifluoromethane**	**3.22**		ug/m³	0.488	0.986	EPA TO-15	12/09/2024 15:41	12/10/2024 15:39	YR
							Certifications:	NELAC-NY12058,NJDEP-NY037		
141-78-6	*** Ethyl acetate**	**2.24**	TO-LCS-H	ug/m³	0.711	0.986	EPA TO-15	12/09/2024 15:41	12/10/2024 15:39	YR
							Certifications:			
100-41-4	**Ethyl Benzene**	**1.50**		ug/m³	0.428	0.986	EPA TO-15	12/09/2024 15:41	12/10/2024 15:39	YR
							Certifications:	NELAC-NY12058,NJDEP-NY037		

Sample Information

Client Sample ID: AA01_112624 **York Sample ID:** 24K1863-01

York Project (SDG) No.	Client Project ID	Matrix	Collection Date/Time	Date Received
24K1863	170361307	Outdoor Ambient Air	November 26, 2024 8:14 am	11/26/2024

VOA, TO15 MASTER

Log-in Notes:

Sample Notes:

Sample Prepared by Method: EPA TO15 PREP

CAS No.	Parameter	Result	Flag	Units	Reported to LOQ	Dilution	Reference Method	Date/Time Prepared	Date/Time Analyzed	Analyst
87-68-3	Hexachlorobutadiene	ND		ug/m³	1.05	0.986	EPA TO-15	12/09/2024 15:41	12/10/2024 15:39	YR
							Certifications:	NELAC-NY12058,NJDEP-NY037		
67-63-0	**Isopropanol**	**17.9**		ug/m³	1.45	0.986	EPA TO-15	12/09/2024 15:41	12/10/2024 15:39	YR
							Certifications:	NELAC-NY12058,NJDEP-NY037		
80-62-6	**Methyl Methacrylate**	**0.969**		ug/m³	0.404	0.986	EPA TO-15	12/09/2024 15:41	12/10/2024 15:39	YR
							Certifications:	NELAC-NY12058,NJDEP-NY037		
1634-04-4	Methyl tert-butyl ether (MTBE)	ND		ug/m³	0.355	0.986	EPA TO-15	12/09/2024 15:41	12/10/2024 15:39	YR
							Certifications:	NELAC-NY12058,NJDEP-NY037		
75-09-2	**Methylene chloride**	**2.19**		ug/m³	2.05	0.986	EPA TO-15	12/09/2024 15:41	12/10/2024 15:39	YR
							Certifications:	NELAC-NY12058,NJDEP-NY037		
142-82-5	**n-Heptane**	**1.45**		ug/m³	0.404	0.986	EPA TO-15	12/09/2024 15:41	12/10/2024 15:39	YR
							Certifications:	NELAC-NY12058,NJDEP-NY037		
110-54-3	**n-Hexane**	**1.42**		ug/m³	0.348	0.986	EPA TO-15	12/09/2024 15:41	12/10/2024 15:39	YR
							Certifications:	NELAC-NY12058,NJDEP-NY037		
95-47-6	**o-Xylene**	**1.93**		ug/m³	0.428	0.986	EPA TO-15	12/09/2024 15:41	12/10/2024 15:39	YR
							Certifications:	NELAC-NY12058,NJDEP-NY037		
179601-23-1	**p- & m- Xylenes**	**5.39**		ug/m³	0.856	0.986	EPA TO-15	12/09/2024 15:41	12/10/2024 15:39	YR
							Certifications:	NELAC-NY12058,NJDEP-NY037		
622-96-8	*** p-Ethyltoluene**	**0.679**		ug/m³	0.485	0.986	EPA TO-15	12/09/2024 15:41	12/10/2024 15:39	YR
							Certifications:			
115-07-1	*** Propylene**	**1.99**		ug/m³	0.170	0.986	EPA TO-15	12/09/2024 15:41	12/10/2024 15:39	YR
							Certifications:			
100-42-5	Styrene	ND		ug/m³	0.420	0.986	EPA TO-15	12/09/2024 15:41	12/10/2024 15:39	YR
							Certifications:	NELAC-NY12058,NJDEP-NY037		
127-18-4	**Tetrachloroethylene**	**1.14**		ug/m³	0.669	0.986	EPA TO-15	12/09/2024 15:41	12/10/2024 15:39	YR
							Certifications:	NELAC-NY12058,NJDEP-NY037		
109-99-9	*** Tetrahydrofuran**	**0.669**		ug/m³	0.582	0.986	EPA TO-15	12/09/2024 15:41	12/10/2024 15:39	YR
							Certifications:			
108-88-3	**Toluene**	**13.5**		ug/m³	0.372	0.986	EPA TO-15	12/09/2024 15:41	12/10/2024 15:39	YR
							Certifications:	NELAC-NY12058,NJDEP-NY037		
156-60-5	trans-1,2-Dichloroethylene	ND		ug/m³	0.391	0.986	EPA TO-15	12/09/2024 15:41	12/10/2024 15:39	YR
							Certifications:	NELAC-NY12058,NJDEP-NY037		
10061-02-6	trans-1,3-Dichloropropylene	ND		ug/m³	0.448	0.986	EPA TO-15	12/09/2024 15:41	12/10/2024 15:39	YR
							Certifications:	NELAC-NY12058,NJDEP-NY037		
79-01-6	**Trichloroethylene**	**0.371**		ug/m³	0.132	0.986	EPA TO-15	12/09/2024 15:41	12/10/2024 15:39	YR
							Certifications:	NELAC-NY12058,NJDEP-NY037		
75-69-4	**Trichlorofluoromethane (Freon 11)**	**1.72**		ug/m³	0.554	0.986	EPA TO-15	12/09/2024 15:41	12/10/2024 15:39	YR
							Certifications:	NELAC-NY12058,NJDEP-NY037		
108-05-4	Vinyl acetate	ND	TO-LCS -L, ICVE	ug/m³	0.347	0.986	EPA TO-15	12/09/2024 15:41	12/10/2024 15:39	YR
							Certifications:	NELAC-NY12058,NJDEP-NY037		
593-60-2	Vinyl bromide	ND		ug/m³	0.431	0.986	EPA TO-15	12/09/2024 15:41	12/10/2024 15:39	YR
							Certifications:	NELAC-NY12058,NJDEP-NY037		

Sample Information

Client Sample ID: AA01_112624 **York Sample ID:** 24K1863-01

York Project (SDG) No.	Client Project ID	Matrix	Collection Date/Time	Date Received
24K1863	170361307	Outdoor Ambient Air	November 26, 2024 8:14 am	11/26/2024

VOA, TO15 MASTER

Log-in Notes:

Sample Notes:

Sample Prepared by Method: EPA TO15 PREP

CAS No.	Parameter	Result	Flag	Units	Reported to LOQ	Dilution	Reference Method	Date/Time Prepared	Date/Time Analyzed	Analyst
75-01-4	Vinyl Chloride	ND		ug/m³	0.126	0.986	EPA TO-15	12/09/2024 15:41	12/10/2024 15:39	YR
							Certifications:	NELAC-NY12058,NJDEP-NY037		

Sample Information

Client Sample ID: IA01_112624 **York Sample ID:** 24K1863-02

York Project (SDG) No.	Client Project ID	Matrix	Collection Date/Time	Date Received
24K1863	170361307	Indoor Ambient Air	November 26, 2024 8:15 am	11/26/2024

VOA, TO15 MASTER

Log-in Notes:

Sample Notes:

Sample Prepared by Method: EPA TO15 PREP

CAS No.	Parameter	Result	Flag	Units	Reported to LOQ	Dilution	Reference Method	Date/Time Prepared	Date/Time Analyzed	Analyst
630-20-6	* 1,1,1,2-Tetrachloroethane	ND		ug/m³	0.625	0.91	EPA TO-15	12/09/2024 15:41	12/10/2024 16:44	YR
							Certifications:			
71-55-6	1,1,1-Trichloroethane	ND		ug/m³	0.497	0.91	EPA TO-15	12/09/2024 15:41	12/10/2024 16:44	YR
							Certifications:	NELAC-NY12058,NJDEP-NY037		
79-34-5	1,1,2,2-Tetrachloroethane	ND		ug/m³	0.625	0.91	EPA TO-15	12/09/2024 15:41	12/10/2024 16:44	YR
							Certifications:	NELAC-NY12058,NJDEP-NY037		
76-13-1	1,1,2-Trichloro-1,2,2-trifluoroethane (Freon 113)	ND		ug/m³	0.697	0.91	EPA TO-15	12/09/2024 15:41	12/10/2024 16:44	YR
							Certifications:	NELAC-NY12058,NJDEP-NY037		
79-00-5	1,1,2-Trichloroethane	ND		ug/m³	0.497	0.91	EPA TO-15	12/09/2024 15:41	12/10/2024 16:44	YR
							Certifications:	NELAC-NY12058,NJDEP-NY037		
75-34-3	1,1-Dichloroethane	ND		ug/m³	0.368	0.91	EPA TO-15	12/09/2024 15:41	12/10/2024 16:44	YR
							Certifications:	NELAC-NY12058,NJDEP-NY037		
75-35-4	1,1-Dichloroethylene	ND		ug/m³	0.180	0.91	EPA TO-15	12/09/2024 15:41	12/10/2024 16:44	YR
							Certifications:	NELAC-NY12058,NJDEP-NY037		
120-82-1	1,2,4-Trichlorobenzene	ND		ug/m³	0.675	0.91	EPA TO-15	12/09/2024 15:41	12/10/2024 16:44	YR
							Certifications:	NELAC-NY12058,NJDEP-NY037		
95-63-6	**1,2,4-Trimethylbenzene**	**0.447**		ug/m³	0.447	0.91	EPA TO-15	12/09/2024 15:41	12/10/2024 16:44	YR
							Certifications:	NELAC-NY12058,NJDEP-NY037		
106-93-4	1,2-Dibromoethane	ND		ug/m³	0.699	0.91	EPA TO-15	12/09/2024 15:41	12/10/2024 16:44	YR
							Certifications:	NELAC-NY12058,NJDEP-NY037		
95-50-1	1,2-Dichlorobenzene	ND		ug/m³	0.547	0.91	EPA TO-15	12/09/2024 15:41	12/10/2024 16:44	YR
							Certifications:	NELAC-NY12058,NJDEP-NY037		
107-06-2	1,2-Dichloroethane	ND		ug/m³	0.368	0.91	EPA TO-15	12/09/2024 15:41	12/10/2024 16:44	YR
							Certifications:	NELAC-NY12058,NJDEP-NY037		
78-87-5	1,2-Dichloropropane	ND		ug/m³	0.420	0.91	EPA TO-15	12/09/2024 15:41	12/10/2024 16:44	YR
							Certifications:	NELAC-NY12058,NJDEP-NY037		
76-14-2	1,2-Dichlorotetrafluoroethane	ND		ug/m³	0.636	0.91	EPA TO-15	12/09/2024 15:41	12/10/2024 16:44	YR
							Certifications:	NELAC-NY12058,NJDEP-NY037		
108-67-8	1,3,5-Trimethylbenzene	ND		ug/m³	0.447	0.91	EPA TO-15	12/09/2024 15:41	12/10/2024 16:44	YR
							Certifications:	NELAC-NY12058,NJDEP-NY037		
106-99-0	1,3-Butadiene	ND		ug/m³	0.604	0.91	EPA TO-15	12/09/2024 15:41	12/10/2024 16:44	YR
							Certifications:	NELAC-NY12058,NJDEP-NY037		
541-73-1	1,3-Dichlorobenzene	ND		ug/m³	0.547	0.91	EPA TO-15	12/09/2024 15:41	12/10/2024 16:44	YR
							Certifications:	NELAC-NY12058,NJDEP-NY037		
142-28-9	* 1,3-Dichloropropane	ND		ug/m³	0.421	0.91	EPA TO-15	12/09/2024 15:41	12/10/2024 16:44	YR
							Certifications:			
106-46-7	1,4-Dichlorobenzene	ND		ug/m³	0.547	0.91	EPA TO-15	12/09/2024 15:41	12/10/2024 16:44	YR
							Certifications:	NELAC-NY12058,NJDEP-NY037		
123-91-1	1,4-Dioxane	ND		ug/m³	0.656	0.91	EPA TO-15	12/09/2024 15:41	12/10/2024 16:44	YR
							Certifications:	NELAC-NY12058,NJDEP-NY037		
78-93-3	**2-Butanone**	**1.05**		ug/m³	0.268	0.91	EPA TO-15	12/09/2024 15:41	12/10/2024 16:44	YR
							Certifications:	NELAC-NY12058,NJDEP-NY037		
591-78-6	* 2-Hexanone	ND		ug/m³	0.746	0.91	EPA TO-15	12/09/2024 15:41	12/10/2024 16:44	YR
							Certifications:			

Sample Information

Client Sample ID: IA01_112624 **York Sample ID:** 24K1863-02

York Project (SDG) No.	Client Project ID	Matrix	Collection Date/Time	Date Received
24K1863	170361307	Indoor Ambient Air	November 26, 2024 8:15 am	11/26/2024

VOA, TO15 MASTER

Log-in Notes:

Sample Notes:

Sample Prepared by Method: EPA TO15 PREP

CAS No.	Parameter	Result	Flag	Units	Reported to LOQ	Dilution	Reference Method	Date/Time Prepared	Date/Time Analyzed	Analyst
107-05-1	3-Chloropropene	ND		ug/m³	1.42	0.91	EPA TO-15	12/09/2024 15:41	12/10/2024 16:44	YR
							Certifications:	NELAC-NY12058,NJDEP-NY037		
108-10-1	4-Methyl-2-pentanone	ND		ug/m³	0.373	0.91	EPA TO-15	12/09/2024 15:41	12/10/2024 16:44	YR
							Certifications:	NELAC-NY12058,NJDEP-NY037		
67-64-1	**Acetone**	**14.5**		ug/m³	1.73	0.91	EPA TO-15	12/09/2024 15:41	12/10/2024 16:44	YR
							Certifications:	NELAC-NY12058,NJDEP-NY037		
107-13-1	Acrylonitrile	ND		ug/m³	2.57	0.91	EPA TO-15	12/09/2024 15:41	12/10/2024 16:44	YR
							Certifications:	NELAC-NY12058,NJDEP-NY037		
71-43-2	**Benzene**	**0.669**		ug/m³	0.291	0.91	EPA TO-15	12/09/2024 15:41	12/10/2024 16:44	YR
							Certifications:	NELAC-NY12058,NJDEP-NY037		
100-44-7	Benzyl chloride	ND		ug/m³	0.471	0.91	EPA TO-15	12/09/2024 15:41	12/10/2024 16:44	YR
							Certifications:	NELAC-NY12058,NJDEP-NY037		
75-27-4	Bromodichloromethane	ND		ug/m³	0.610	0.91	EPA TO-15	12/09/2024 15:41	12/10/2024 16:44	YR
							Certifications:	NELAC-NY12058,NJDEP-NY037		
75-25-2	Bromoform	ND	TO-CCV	ug/m³	0.941	0.91	EPA TO-15	12/09/2024 15:41	12/10/2024 16:44	YR
							Certifications:	NELAC-NY12058,NJDEP-NY037		
74-83-9	Bromomethane	ND		ug/m³	0.353	0.91	EPA TO-15	12/09/2024 15:41	12/10/2024 16:44	YR
							Certifications:	NELAC-NY12058,NJDEP-NY037		
75-15-0	Carbon disulfide	ND		ug/m³	0.283	0.91	EPA TO-15	12/09/2024 15:41	12/10/2024 16:44	YR
							Certifications:	NELAC-NY12058,NJDEP-NY037		
56-23-5	**Carbon tetrachloride**	**0.401**		ug/m³	0.143	0.91	EPA TO-15	12/09/2024 15:41	12/10/2024 16:44	YR
							Certifications:	NELAC-NY12058,NJDEP-NY037		
108-90-7	Chlorobenzene	ND		ug/m³	0.419	0.91	EPA TO-15	12/09/2024 15:41	12/10/2024 16:44	YR
							Certifications:	NELAC-NY12058,NJDEP-NY037		
75-00-3	Chloroethane	ND		ug/m³	0.240	0.91	EPA TO-15	12/09/2024 15:41	12/10/2024 16:44	YR
							Certifications:	NELAC-NY12058,NJDEP-NY037		
67-66-3	Chloroform	ND		ug/m³	0.444	0.91	EPA TO-15	12/09/2024 15:41	12/10/2024 16:44	YR
							Certifications:	NELAC-NY12058,NJDEP-NY037		
74-87-3	**Chloromethane**	**1.26**		ug/m³	0.188	0.91	EPA TO-15	12/09/2024 15:41	12/10/2024 16:44	YR
							Certifications:	NELAC-NY12058,NJDEP-NY037		
156-59-2	cis-1,2-Dichloroethylene	ND		ug/m³	0.180	0.91	EPA TO-15	12/09/2024 15:41	12/10/2024 16:44	YR
							Certifications:	NELAC-NY12058,NJDEP-NY037		
10061-01-5	cis-1,3-Dichloropropylene	ND		ug/m³	0.413	0.91	EPA TO-15	12/09/2024 15:41	12/10/2024 16:44	YR
							Certifications:	NELAC-NY12058,NJDEP-NY037		
110-82-7	Cyclohexane	ND		ug/m³	0.313	0.91	EPA TO-15	12/09/2024 15:41	12/10/2024 16:44	YR
							Certifications:	NELAC-NY12058,NJDEP-NY037		
124-48-1	Dibromochloromethane	ND		ug/m³	0.775	0.91	EPA TO-15	12/09/2024 15:41	12/10/2024 16:44	YR
							Certifications:	NELAC-NY12058,NJDEP-NY037		
75-71-8	**Dichlorodifluoromethane**	**2.48**		ug/m³	0.450	0.91	EPA TO-15	12/09/2024 15:41	12/10/2024 16:44	YR
							Certifications:	NELAC-NY12058,NJDEP-NY037		
141-78-6	*** Ethyl acetate**	**1.02**	TO-LCS-H	ug/m³	0.656	0.91	EPA TO-15	12/09/2024 15:41	12/10/2024 16:44	YR
							Certifications:			
100-41-4	Ethyl Benzene	ND		ug/m³	0.395	0.91	EPA TO-15	12/09/2024 15:41	12/10/2024 16:44	YR
							Certifications:	NELAC-NY12058,NJDEP-NY037		

Sample Information

Client Sample ID: IA01_112624 **York Sample ID:** 24K1863-02

York Project (SDG) No.	Client Project ID	Matrix	Collection Date/Time	Date Received
24K1863	170361307	Indoor Ambient Air	November 26, 2024 8:15 am	11/26/2024

VOA, TO15 MASTER

Log-in Notes:

Sample Notes:

Sample Prepared by Method: EPA TO15 PREP

CAS No.	Parameter	Result	Flag	Units	Reported to LOQ	Dilution	Reference Method	Date/Time Prepared	Date/Time Analyzed	Analyst
87-68-3	Hexachlorobutadiene	ND		ug/m³	0.971	0.91	EPA TO-15	12/09/2024 15:41	12/10/2024 16:44	YR
							Certifications:	NELAC-NY12058,NJDEP-NY037		
67-63-0	**Isopropanol**	**3.15**		ug/m³	1.34	0.91	EPA TO-15	12/09/2024 15:41	12/10/2024 16:44	YR
							Certifications:	NELAC-NY12058,NJDEP-NY037		
80-62-6	**Methyl Methacrylate**	**0.931**		ug/m³	0.373	0.91	EPA TO-15	12/09/2024 15:41	12/10/2024 16:44	YR
							Certifications:	NELAC-NY12058,NJDEP-NY037		
1634-04-4	Methyl tert-butyl ether (MTBE)	ND		ug/m³	0.328	0.91	EPA TO-15	12/09/2024 15:41	12/10/2024 16:44	YR
							Certifications:	NELAC-NY12058,NJDEP-NY037		
75-09-2	Methylene chloride	ND		ug/m³	1.90	0.91	EPA TO-15	12/09/2024 15:41	12/10/2024 16:44	YR
							Certifications:	NELAC-NY12058,NJDEP-NY037		
142-82-5	n-Heptane	ND		ug/m³	0.373	0.91	EPA TO-15	12/09/2024 15:41	12/10/2024 16:44	YR
							Certifications:	NELAC-NY12058,NJDEP-NY037		
110-54-3	**n-Hexane**	**0.417**		ug/m³	0.321	0.91	EPA TO-15	12/09/2024 15:41	12/10/2024 16:44	YR
							Certifications:	NELAC-NY12058,NJDEP-NY037		
95-47-6	o-Xylene	ND		ug/m³	0.395	0.91	EPA TO-15	12/09/2024 15:41	12/10/2024 16:44	YR
							Certifications:	NELAC-NY12058,NJDEP-NY037		
179601-23-1	**p- & m- Xylenes**	**0.948**		ug/m³	0.790	0.91	EPA TO-15	12/09/2024 15:41	12/10/2024 16:44	YR
							Certifications:	NELAC-NY12058,NJDEP-NY037		
622-96-8	* p-Ethyltoluene	ND		ug/m³	0.447	0.91	EPA TO-15	12/09/2024 15:41	12/10/2024 16:44	YR
							Certifications:			
115-07-1	*** Propylene**	**0.971**		ug/m³	0.157	0.91	EPA TO-15	12/09/2024 15:41	12/10/2024 16:44	YR
							Certifications:			
100-42-5	Styrene	ND		ug/m³	0.388	0.91	EPA TO-15	12/09/2024 15:41	12/10/2024 16:44	YR
							Certifications:	NELAC-NY12058,NJDEP-NY037		
127-18-4	Tetrachloroethylene	ND		ug/m³	0.617	0.91	EPA TO-15	12/09/2024 15:41	12/10/2024 16:44	YR
							Certifications:	NELAC-NY12058,NJDEP-NY037		
109-99-9	* Tetrahydrofuran	ND		ug/m³	0.537	0.91	EPA TO-15	12/09/2024 15:41	12/10/2024 16:44	YR
							Certifications:			
108-88-3	**Toluene**	**1.27**		ug/m³	0.343	0.91	EPA TO-15	12/09/2024 15:41	12/10/2024 16:44	YR
							Certifications:	NELAC-NY12058,NJDEP-NY037		
156-60-5	trans-1,2-Dichloroethylene	ND		ug/m³	0.361	0.91	EPA TO-15	12/09/2024 15:41	12/10/2024 16:44	YR
							Certifications:	NELAC-NY12058,NJDEP-NY037		
10061-02-6	trans-1,3-Dichloropropylene	ND		ug/m³	0.413	0.91	EPA TO-15	12/09/2024 15:41	12/10/2024 16:44	YR
							Certifications:	NELAC-NY12058,NJDEP-NY037		
79-01-6	**Trichloroethylene**	**4.30**		ug/m³	0.122	0.91	EPA TO-15	12/09/2024 15:41	12/10/2024 16:44	YR
							Certifications:	NELAC-NY12058,NJDEP-NY037		
75-69-4	**Trichlorofluoromethane (Freon 11)**	**1.28**		ug/m³	0.511	0.91	EPA TO-15	12/09/2024 15:41	12/10/2024 16:44	YR
							Certifications:	NELAC-NY12058,NJDEP-NY037		
108-05-4	Vinyl acetate	ND	ICVE, TO-LCS -L	ug/m³	0.320	0.91	EPA TO-15	12/09/2024 15:41	12/10/2024 16:44	YR
							Certifications:	NELAC-NY12058,NJDEP-NY037		
593-60-2	Vinyl bromide	ND		ug/m³	0.398	0.91	EPA TO-15	12/09/2024 15:41	12/10/2024 16:44	YR
							Certifications:	NELAC-NY12058,NJDEP-NY037		

Sample Information

Client Sample ID: IA01_112624 **York Sample ID:** 24K1863-02

York Project (SDG) No.	Client Project ID	Matrix	Collection Date/Time	Date Received
24K1863	170361307	Indoor Ambient Air	November 26, 2024 8:15 am	11/26/2024

VOA, TO15 MASTER

Log-in Notes:

Sample Notes:

Sample Prepared by Method: EPA TO15 PREP

CAS No.	Parameter	Result	Flag	Units	Reported to LOQ	Dilution	Reference Method	Date/Time Prepared	Date/Time Analyzed	Analyst
75-01-4	Vinyl Chloride	ND		ug/m³	0.116	0.91	EPA TO-15	12/09/2024 15:41	12/10/2024 16:44	YR
							Certifications:	NELAC-NY12058,NJDEP-NY037		

Sample Information

Client Sample ID: IA02_112624 **York Sample ID:** 24K1863-03

York Project (SDG) No.	Client Project ID	Matrix	Collection Date/Time	Date Received
24K1863	170361307	Indoor Ambient Air	November 26, 2024 8:16 am	11/26/2024

VOA, TO15 MASTER

Log-in Notes:

Sample Notes:

Sample Prepared by Method: EPA TO15 PREP

CAS No.	Parameter	Result	Flag	Units	Reported to LOQ	Dilution	Reference Method	Date/Time Prepared	Date/Time Analyzed	Analyst
630-20-6	* 1,1,1,2-Tetrachloroethane	ND		ug/m³	0.610	0.889	EPA TO-15	12/09/2024 09:00	12/09/2024 19:24	YR
							Certifications:			
71-55-6	1,1,1-Trichloroethane	ND		ug/m³	0.485	0.889	EPA TO-15	12/09/2024 09:00	12/09/2024 19:24	YR
							Certifications:	NELAC-NY12058,NJDEP-NY037		
79-34-5	1,1,2,2-Tetrachloroethane	ND		ug/m³	0.610	0.889	EPA TO-15	12/09/2024 09:00	12/09/2024 19:24	YR
							Certifications:	NELAC-NY12058,NJDEP-NY037		
76-13-1	1,1,2-Trichloro-1,2,2-trifluoroethane (Freon 113)	ND		ug/m³	0.681	0.889	EPA TO-15	12/09/2024 09:00	12/09/2024 19:24	YR
							Certifications:	NELAC-NY12058,NJDEP-NY037		
79-00-5	1,1,2-Trichloroethane	ND		ug/m³	0.485	0.889	EPA TO-15	12/09/2024 09:00	12/09/2024 19:24	YR
							Certifications:	NELAC-NY12058,NJDEP-NY037		
75-34-3	1,1-Dichloroethane	ND		ug/m³	0.360	0.889	EPA TO-15	12/09/2024 09:00	12/09/2024 19:24	YR
							Certifications:	NELAC-NY12058,NJDEP-NY037		
75-35-4	1,1-Dichloroethylene	ND		ug/m³	0.176	0.889	EPA TO-15	12/09/2024 09:00	12/09/2024 19:24	YR
							Certifications:	NELAC-NY12058,NJDEP-NY037		
120-82-1	1,2,4-Trichlorobenzene	ND	TO-LCS-L	ug/m³	0.660	0.889	EPA TO-15	12/09/2024 09:00	12/09/2024 19:24	YR
							Certifications:	NELAC-NY12058,NJDEP-NY037		
95-63-6	1,2,4-Trimethylbenzene	ND		ug/m³	0.437	0.889	EPA TO-15	12/09/2024 09:00	12/09/2024 19:24	YR
							Certifications:	NELAC-NY12058,NJDEP-NY037		
106-93-4	1,2-Dibromoethane	ND		ug/m³	0.683	0.889	EPA TO-15	12/09/2024 09:00	12/09/2024 19:24	YR
							Certifications:	NELAC-NY12058,NJDEP-NY037		
95-50-1	1,2-Dichlorobenzene	ND		ug/m³	0.534	0.889	EPA TO-15	12/09/2024 09:00	12/09/2024 19:24	YR
							Certifications:	NELAC-NY12058,NJDEP-NY037		
107-06-2	1,2-Dichloroethane	ND		ug/m³	0.360	0.889	EPA TO-15	12/09/2024 09:00	12/09/2024 19:24	YR
							Certifications:	NELAC-NY12058,NJDEP-NY037		
78-87-5	1,2-Dichloropropane	ND		ug/m³	0.411	0.889	EPA TO-15	12/09/2024 09:00	12/09/2024 19:24	YR
							Certifications:	NELAC-NY12058,NJDEP-NY037		
76-14-2	1,2-Dichlorotetrafluoroethane	ND		ug/m³	0.621	0.889	EPA TO-15	12/09/2024 09:00	12/09/2024 19:24	YR
							Certifications:	NELAC-NY12058,NJDEP-NY037		
108-67-8	1,3,5-Trimethylbenzene	ND		ug/m³	0.437	0.889	EPA TO-15	12/09/2024 09:00	12/09/2024 19:24	YR
							Certifications:	NELAC-NY12058,NJDEP-NY037		
106-99-0	1,3-Butadiene	ND		ug/m³	0.590	0.889	EPA TO-15	12/09/2024 09:00	12/09/2024 19:24	YR
							Certifications:	NELAC-NY12058,NJDEP-NY037		
541-73-1	1,3-Dichlorobenzene	ND		ug/m³	0.534	0.889	EPA TO-15	12/09/2024 09:00	12/09/2024 19:24	YR
							Certifications:	NELAC-NY12058,NJDEP-NY037		
142-28-9	* 1,3-Dichloropropane	ND		ug/m³	0.411	0.889	EPA TO-15	12/09/2024 09:00	12/09/2024 19:24	YR
							Certifications:			
106-46-7	1,4-Dichlorobenzene	ND		ug/m³	0.534	0.889	EPA TO-15	12/09/2024 09:00	12/09/2024 19:24	YR
							Certifications:	NELAC-NY12058,NJDEP-NY037		
123-91-1	1,4-Dioxane	ND		ug/m³	0.641	0.889	EPA TO-15	12/09/2024 09:00	12/09/2024 19:24	YR
							Certifications:	NELAC-NY12058,NJDEP-NY037		
78-93-3	**2-Butanone**	**0.891**		ug/m³	0.262	0.889	EPA TO-15	12/09/2024 09:00	12/09/2024 19:24	YR
							Certifications:	NELAC-NY12058,NJDEP-NY037		
591-78-6	* 2-Hexanone	ND		ug/m³	0.728	0.889	EPA TO-15	12/09/2024 09:00	12/09/2024 19:24	YR
							Certifications:			

Sample Information

Client Sample ID: IA02_112624 **York Sample ID:** 24K1863-03

York Project (SDG) No.	Client Project ID	Matrix	Collection Date/Time	Date Received
24K1863	170361307	Indoor Ambient Air	November 26, 2024 8:16 am	11/26/2024

VOA, TO15 MASTER

Log-in Notes:

Sample Notes:

Sample Prepared by Method: EPA TO15 PREP

CAS No.	Parameter	Result	Flag	Units	Reported to LOQ	Dilution	Reference Method	Date/Time Prepared	Date/Time Analyzed	Analyst
107-05-1	3-Chloropropene	ND		ug/m³	1.39	0.889	EPA TO-15	12/09/2024 09:00	12/09/2024 19:24	YR
							Certifications:	NELAC-NY12058,NJDEP-NY037		
108-10-1	4-Methyl-2-pentanone	ND		ug/m³	0.364	0.889	EPA TO-15	12/09/2024 09:00	12/09/2024 19:24	YR
							Certifications:	NELAC-NY12058,NJDEP-NY037		
67-64-1	**Acetone**	**19.3**		ug/m³	1.69	0.889	EPA TO-15	12/09/2024 09:00	12/09/2024 19:24	YR
							Certifications:	NELAC-NY12058,NJDEP-NY037		
107-13-1	**Acrylonitrile**	**52.8**		ug/m³	2.51	0.889	EPA TO-15	12/09/2024 09:00	12/09/2024 19:24	YR
							Certifications:	NELAC-NY12058,NJDEP-NY037		
71-43-2	**Benzene**	**0.341**		ug/m³	0.284	0.889	EPA TO-15	12/09/2024 09:00	12/09/2024 19:24	YR
							Certifications:	NELAC-NY12058,NJDEP-NY037		
100-44-7	Benzyl chloride	ND		ug/m³	0.460	0.889	EPA TO-15	12/09/2024 09:00	12/09/2024 19:24	YR
							Certifications:	NELAC-NY12058,NJDEP-NY037		
75-27-4	Bromodichloromethane	ND		ug/m³	0.596	0.889	EPA TO-15	12/09/2024 09:00	12/09/2024 19:24	YR
							Certifications:	NELAC-NY12058,NJDEP-NY037		
75-25-2	Bromoform	ND		ug/m³	0.919	0.889	EPA TO-15	12/09/2024 09:00	12/09/2024 19:24	YR
							Certifications:	NELAC-NY12058,NJDEP-NY037		
74-83-9	Bromomethane	ND		ug/m³	0.345	0.889	EPA TO-15	12/09/2024 09:00	12/09/2024 19:24	YR
							Certifications:	NELAC-NY12058,NJDEP-NY037		
75-15-0	Carbon disulfide	ND		ug/m³	0.277	0.889	EPA TO-15	12/09/2024 09:00	12/09/2024 19:24	YR
							Certifications:	NELAC-NY12058,NJDEP-NY037		
56-23-5	**Carbon tetrachloride**	**0.224**		ug/m³	0.140	0.889	EPA TO-15	12/09/2024 09:00	12/09/2024 19:24	YR
							Certifications:	NELAC-NY12058,NJDEP-NY037		
108-90-7	Chlorobenzene	ND		ug/m³	0.409	0.889	EPA TO-15	12/09/2024 09:00	12/09/2024 19:24	YR
							Certifications:	NELAC-NY12058,NJDEP-NY037		
75-00-3	Chloroethane	ND		ug/m³	0.235	0.889	EPA TO-15	12/09/2024 09:00	12/09/2024 19:24	YR
							Certifications:	NELAC-NY12058,NJDEP-NY037		
67-66-3	**Chloroform**	**2.73**		ug/m³	0.434	0.889	EPA TO-15	12/09/2024 09:00	12/09/2024 19:24	YR
							Certifications:	NELAC-NY12058,NJDEP-NY037		
74-87-3	**Chloromethane**	**1.73**	TO-CCV, TO-LCS-H	ug/m³	0.184	0.889	EPA TO-15	12/09/2024 09:00	12/09/2024 19:24	YR
							Certifications:	NELAC-NY12058,NJDEP-NY037		
156-59-2	**cis-1,2-Dichloroethylene**	**2.61**		ug/m³	0.176	0.889	EPA TO-15	12/09/2024 09:00	12/09/2024 19:24	YR
							Certifications:	NELAC-NY12058,NJDEP-NY037		
10061-01-5	cis-1,3-Dichloropropylene	ND		ug/m³	0.403	0.889	EPA TO-15	12/09/2024 09:00	12/09/2024 19:24	YR
							Certifications:	NELAC-NY12058,NJDEP-NY037		
110-82-7	**Cyclohexane**	**3.00**		ug/m³	0.306	0.889	EPA TO-15	12/09/2024 09:00	12/09/2024 19:24	YR
							Certifications:	NELAC-NY12058,NJDEP-NY037		
124-48-1	Dibromochloromethane	ND		ug/m³	0.757	0.889	EPA TO-15	12/09/2024 09:00	12/09/2024 19:24	YR
							Certifications:	NELAC-NY12058,NJDEP-NY037		
75-71-8	**Dichlorodifluoromethane**	**2.24**		ug/m³	0.440	0.889	EPA TO-15	12/09/2024 09:00	12/09/2024 19:24	YR
							Certifications:	NELAC-NY12058,NJDEP-NY037		
141-78-6	*** Ethyl acetate**	**1.54**		ug/m³	0.641	0.889	EPA TO-15	12/09/2024 09:00	12/09/2024 19:24	YR
							Certifications:			

Sample Information

Client Sample ID: IA02_112624 **York Sample ID:** 24K1863-03

York Project (SDG) No.	Client Project ID	Matrix	Collection Date/Time	Date Received
24K1863	170361307	Indoor Ambient Air	November 26, 2024 8:16 am	11/26/2024

VOA, TO15 MASTER

Log-in Notes:

Sample Notes:

Sample Prepared by Method: EPA TO15 PREP

CAS No.	Parameter	Result	Flag	Units	Reported to LOQ	Dilution	Reference Method	Date/Time Prepared	Date/Time Analyzed	Analyst
100-41-4	Ethyl Benzene	ND		ug/m³	0.386	0.889	EPA TO-15	12/09/2024 09:00	12/09/2024 19:24	YR
							Certifications:	NELAC-NY12058,NJDEP-NY037		
87-68-3	Hexachlorobutadiene	ND		ug/m³	0.948	0.889	EPA TO-15	12/09/2024 09:00	12/09/2024 19:24	YR
							Certifications:	NELAC-NY12058,NJDEP-NY037		
67-63-0	**Isopropanol**	**3.63**		ug/m³	1.31	0.889	EPA TO-15	12/09/2024 09:00	12/09/2024 19:24	YR
							Certifications:	NELAC-NY12058,NJDEP-NY037		
80-62-6	**Methyl Methacrylate**	**0.473**		ug/m³	0.364	0.889	EPA TO-15	12/09/2024 09:00	12/09/2024 19:24	YR
							Certifications:	NELAC-NY12058,NJDEP-NY037		
1634-04-4	Methyl tert-butyl ether (MTBE)	ND		ug/m³	0.321	0.889	EPA TO-15	12/09/2024 09:00	12/09/2024 19:24	YR
							Certifications:	NELAC-NY12058,NJDEP-NY037		
75-09-2	Methylene chloride	ND		ug/m³	1.85	0.889	EPA TO-15	12/09/2024 09:00	12/09/2024 19:24	YR
							Certifications:	NELAC-NY12058,NJDEP-NY037		
142-82-5	n-Heptane	ND		ug/m³	0.364	0.889	EPA TO-15	12/09/2024 09:00	12/09/2024 19:24	YR
							Certifications:	NELAC-NY12058,NJDEP-NY037		
110-54-3	**n-Hexane**	**0.501**		ug/m³	0.313	0.889	EPA TO-15	12/09/2024 09:00	12/09/2024 19:24	YR
							Certifications:	NELAC-NY12058,NJDEP-NY037		
95-47-6	o-Xylene	ND		ug/m³	0.386	0.889	EPA TO-15	12/09/2024 09:00	12/09/2024 19:24	YR
							Certifications:	NELAC-NY12058,NJDEP-NY037		
179601-23-1	p- & m- Xylenes	ND		ug/m³	0.772	0.889	EPA TO-15	12/09/2024 09:00	12/09/2024 19:24	YR
							Certifications:	NELAC-NY12058,NJDEP-NY037		
622-96-8	* p-Ethyltoluene	ND		ug/m³	0.437	0.889	EPA TO-15	12/09/2024 09:00	12/09/2024 19:24	YR
							Certifications:			
115-07-1	* Propylene	ND		ug/m³	0.153	0.889	EPA TO-15	12/09/2024 09:00	12/09/2024 19:24	YR
							Certifications:			
100-42-5	Styrene	ND		ug/m³	0.379	0.889	EPA TO-15	12/09/2024 09:00	12/09/2024 19:24	YR
							Certifications:	NELAC-NY12058,NJDEP-NY037		
127-18-4	Tetrachloroethylene	ND		ug/m³	0.603	0.889	EPA TO-15	12/09/2024 09:00	12/09/2024 19:24	YR
							Certifications:	NELAC-NY12058,NJDEP-NY037		
109-99-9	* Tetrahydrofuran	ND		ug/m³	0.524	0.889	EPA TO-15	12/09/2024 09:00	12/09/2024 19:24	YR
							Certifications:			
108-88-3	**Toluene**	**0.804**		ug/m³	0.335	0.889	EPA TO-15	12/09/2024 09:00	12/09/2024 19:24	YR
							Certifications:	NELAC-NY12058,NJDEP-NY037		
156-60-5	trans-1,2-Dichloroethylene	ND		ug/m³	0.352	0.889	EPA TO-15	12/09/2024 09:00	12/09/2024 19:24	YR
							Certifications:	NELAC-NY12058,NJDEP-NY037		
10061-02-6	trans-1,3-Dichloropropylene	ND		ug/m³	0.403	0.889	EPA TO-15	12/09/2024 09:00	12/09/2024 19:24	YR
							Certifications:	NELAC-NY12058,NJDEP-NY037		
79-01-6	**Trichloroethylene**	**12.8**		ug/m³	0.119	0.889	EPA TO-15	12/09/2024 09:00	12/09/2024 19:24	YR
							Certifications:	NELAC-NY12058,NJDEP-NY037		
75-69-4	**Trichlorofluoromethane (Freon 11)**	**1.10**		ug/m³	0.499	0.889	EPA TO-15	12/09/2024 09:00	12/09/2024 19:24	YR
							Certifications:	NELAC-NY12058,NJDEP-NY037		
108-05-4	Vinyl acetate	ND	TO-LCS -L	ug/m³	0.313	0.889	EPA TO-15	12/09/2024 09:00	12/09/2024 19:24	YR
							Certifications:	NELAC-NY12058,NJDEP-NY037		
593-60-2	Vinyl bromide	ND		ug/m³	0.389	0.889	EPA TO-15	12/09/2024 09:00	12/09/2024 19:24	YR
							Certifications:	NELAC-NY12058,NJDEP-NY037		

Sample Information

Client Sample ID: IA02_112624 **York Sample ID:** 24K1863-03

York Project (SDG) No.	Client Project ID	Matrix	Collection Date/Time	Date Received
24K1863	170361307	Indoor Ambient Air	November 26, 2024 8:16 am	11/26/2024

VOA, TO15 MASTER

Log-in Notes:

Sample Notes:

Sample Prepared by Method: EPA TO15 PREP

CAS No.	Parameter	Result	Flag	Units	Reported to LOQ	Dilution	Reference Method	Date/Time Prepared	Date/Time Analyzed	Analyst
75-01-4	Vinyl Chloride	ND		ug/m³	0.114	0.889	EPA TO-15	12/09/2024 09:00	12/09/2024 19:24	YR
							Certifications:	NELAC-NY12058,NJDEP-NY037		

Sample Information

Client Sample ID: IA03_112624 **York Sample ID:** 24K1863-04

York Project (SDG) No.	Client Project ID	Matrix	Collection Date/Time	Date Received
24K1863	170361307	Indoor Ambient Air	November 26, 2024 8:17 am	11/26/2024

VOA, TO15 MASTER

Log-in Notes:

Sample Notes:

Sample Prepared by Method: EPA TO15 PREP

CAS No.	Parameter	Result	Flag	Units	Reported to LOQ	Dilution	Reference Method	Date/Time Prepared	Date/Time Analyzed	Analyst
630-20-6	* 1,1,1,2-Tetrachloroethane	ND		ug/m³	0.601	0.875	EPA TO-15	12/09/2024 09:00	12/09/2024 20:10	YR
							Certifications:			
71-55-6	1,1,1-Trichloroethane	ND		ug/m³	0.477	0.875	EPA TO-15	12/09/2024 09:00	12/09/2024 20:10	YR
							Certifications:	NELAC-NY12058,NJDEP-NY037		
79-34-5	1,1,2,2-Tetrachloroethane	ND		ug/m³	0.601	0.875	EPA TO-15	12/09/2024 09:00	12/09/2024 20:10	YR
							Certifications:	NELAC-NY12058,NJDEP-NY037		
76-13-1	1,1,2-Trichloro-1,2,2-trifluoroethane (Freon 113)	ND		ug/m³	0.671	0.875	EPA TO-15	12/09/2024 09:00	12/09/2024 20:10	YR
							Certifications:	NELAC-NY12058,NJDEP-NY037		
79-00-5	1,1,2-Trichloroethane	ND		ug/m³	0.477	0.875	EPA TO-15	12/09/2024 09:00	12/09/2024 20:10	YR
							Certifications:	NELAC-NY12058,NJDEP-NY037		
75-34-3	1,1-Dichloroethane	ND		ug/m³	0.354	0.875	EPA TO-15	12/09/2024 09:00	12/09/2024 20:10	YR
							Certifications:	NELAC-NY12058,NJDEP-NY037		
75-35-4	1,1-Dichloroethylene	ND		ug/m³	0.173	0.875	EPA TO-15	12/09/2024 09:00	12/09/2024 20:10	YR
							Certifications:	NELAC-NY12058,NJDEP-NY037		
120-82-1	1,2,4-Trichlorobenzene	ND	TO-LCS-L	ug/m³	0.649	0.875	EPA TO-15	12/09/2024 09:00	12/09/2024 20:10	YR
							Certifications:	NELAC-NY12058,NJDEP-NY037		
95-63-6	1,2,4-Trimethylbenzene	ND		ug/m³	0.430	0.875	EPA TO-15	12/09/2024 09:00	12/09/2024 20:10	YR
							Certifications:	NELAC-NY12058,NJDEP-NY037		
106-93-4	1,2-Dibromoethane	ND		ug/m³	0.672	0.875	EPA TO-15	12/09/2024 09:00	12/09/2024 20:10	YR
							Certifications:	NELAC-NY12058,NJDEP-NY037		
95-50-1	1,2-Dichlorobenzene	ND		ug/m³	0.526	0.875	EPA TO-15	12/09/2024 09:00	12/09/2024 20:10	YR
							Certifications:	NELAC-NY12058,NJDEP-NY037		
107-06-2	1,2-Dichloroethane	ND		ug/m³	0.354	0.875	EPA TO-15	12/09/2024 09:00	12/09/2024 20:10	YR
							Certifications:	NELAC-NY12058,NJDEP-NY037		
78-87-5	1,2-Dichloropropane	ND		ug/m³	0.404	0.875	EPA TO-15	12/09/2024 09:00	12/09/2024 20:10	YR
							Certifications:	NELAC-NY12058,NJDEP-NY037		
76-14-2	1,2-Dichlorotetrafluoroethane	ND		ug/m³	0.612	0.875	EPA TO-15	12/09/2024 09:00	12/09/2024 20:10	YR
							Certifications:	NELAC-NY12058,NJDEP-NY037		
108-67-8	1,3,5-Trimethylbenzene	ND		ug/m³	0.430	0.875	EPA TO-15	12/09/2024 09:00	12/09/2024 20:10	YR
							Certifications:	NELAC-NY12058,NJDEP-NY037		
106-99-0	1,3-Butadiene	ND		ug/m³	0.581	0.875	EPA TO-15	12/09/2024 09:00	12/09/2024 20:10	YR
							Certifications:	NELAC-NY12058,NJDEP-NY037		
541-73-1	1,3-Dichlorobenzene	ND		ug/m³	0.526	0.875	EPA TO-15	12/09/2024 09:00	12/09/2024 20:10	YR
							Certifications:	NELAC-NY12058,NJDEP-NY037		
142-28-9	* 1,3-Dichloropropane	ND		ug/m³	0.404	0.875	EPA TO-15	12/09/2024 09:00	12/09/2024 20:10	YR
							Certifications:			
106-46-7	1,4-Dichlorobenzene	ND		ug/m³	0.526	0.875	EPA TO-15	12/09/2024 09:00	12/09/2024 20:10	YR
							Certifications:	NELAC-NY12058,NJDEP-NY037		
123-91-1	1,4-Dioxane	ND		ug/m³	0.631	0.875	EPA TO-15	12/09/2024 09:00	12/09/2024 20:10	YR
							Certifications:	NELAC-NY12058,NJDEP-NY037		
78-93-3	**2-Butanone**	**1.03**		ug/m³	0.258	0.875	EPA TO-15	12/09/2024 09:00	12/09/2024 20:10	YR
							Certifications:	NELAC-NY12058,NJDEP-NY037		
591-78-6	* 2-Hexanone	ND		ug/m³	0.717	0.875	EPA TO-15	12/09/2024 09:00	12/09/2024 20:10	YR
							Certifications:			

Sample Information

Client Sample ID: IA03_112624 **York Sample ID:** 24K1863-04

York Project (SDG) No.	Client Project ID	Matrix	Collection Date/Time	Date Received
24K1863	170361307	Indoor Ambient Air	November 26, 2024 8:17 am	11/26/2024

VOA, TO15 MASTER

Log-in Notes:

Sample Notes:

Sample Prepared by Method: EPA TO15 PREP

CAS No.	Parameter	Result	Flag	Units	Reported to LOQ	Dilution	Reference Method	Date/Time Prepared	Date/Time Analyzed	Analyst
107-05-1	3-Chloropropene	ND		ug/m³	1.37	0.875	EPA TO-15	12/09/2024 09:00	12/09/2024 20:10	YR
							Certifications:	NELAC-NY12058,NJDEP-NY037		
108-10-1	4-Methyl-2-pentanone	ND		ug/m³	0.358	0.875	EPA TO-15	12/09/2024 09:00	12/09/2024 20:10	YR
							Certifications:	NELAC-NY12058,NJDEP-NY037		
67-64-1	**Acetone**	**24.6**		ug/m³	1.66	0.875	EPA TO-15	12/09/2024 09:00	12/09/2024 20:10	YR
							Certifications:	NELAC-NY12058,NJDEP-NY037		
107-13-1	Acrylonitrile	ND		ug/m³	2.47	0.875	EPA TO-15	12/09/2024 09:00	12/09/2024 20:10	YR
							Certifications:	NELAC-NY12058,NJDEP-NY037		
71-43-2	**Benzene**	**0.671**		ug/m³	0.280	0.875	EPA TO-15	12/09/2024 09:00	12/09/2024 20:10	YR
							Certifications:	NELAC-NY12058,NJDEP-NY037		
100-44-7	Benzyl chloride	ND		ug/m³	0.453	0.875	EPA TO-15	12/09/2024 09:00	12/09/2024 20:10	YR
							Certifications:	NELAC-NY12058,NJDEP-NY037		
75-27-4	Bromodichloromethane	ND		ug/m³	0.586	0.875	EPA TO-15	12/09/2024 09:00	12/09/2024 20:10	YR
							Certifications:	NELAC-NY12058,NJDEP-NY037		
75-25-2	Bromoform	ND		ug/m³	0.904	0.875	EPA TO-15	12/09/2024 09:00	12/09/2024 20:10	YR
							Certifications:	NELAC-NY12058,NJDEP-NY037		
74-83-9	Bromomethane	ND		ug/m³	0.340	0.875	EPA TO-15	12/09/2024 09:00	12/09/2024 20:10	YR
							Certifications:	NELAC-NY12058,NJDEP-NY037		
75-15-0	Carbon disulfide	ND		ug/m³	0.272	0.875	EPA TO-15	12/09/2024 09:00	12/09/2024 20:10	YR
							Certifications:	NELAC-NY12058,NJDEP-NY037		
56-23-5	**Carbon tetrachloride**	**0.385**		ug/m³	0.138	0.875	EPA TO-15	12/09/2024 09:00	12/09/2024 20:10	YR
							Certifications:	NELAC-NY12058,NJDEP-NY037		
108-90-7	Chlorobenzene	ND		ug/m³	0.403	0.875	EPA TO-15	12/09/2024 09:00	12/09/2024 20:10	YR
							Certifications:	NELAC-NY12058,NJDEP-NY037		
75-00-3	Chloroethane	ND		ug/m³	0.231	0.875	EPA TO-15	12/09/2024 09:00	12/09/2024 20:10	YR
							Certifications:	NELAC-NY12058,NJDEP-NY037		
67-66-3	Chloroform	ND		ug/m³	0.427	0.875	EPA TO-15	12/09/2024 09:00	12/09/2024 20:10	YR
							Certifications:	NELAC-NY12058,NJDEP-NY037		
74-87-3	**Chloromethane**	**1.92**	TO-CCV, TO-LCS-H	ug/m³	0.181	0.875	EPA TO-15	12/09/2024 09:00	12/09/2024 20:10	YR
							Certifications:	NELAC-NY12058,NJDEP-NY037		
156-59-2	cis-1,2-Dichloroethylene	ND		ug/m³	0.173	0.875	EPA TO-15	12/09/2024 09:00	12/09/2024 20:10	YR
							Certifications:	NELAC-NY12058,NJDEP-NY037		
10061-01-5	cis-1,3-Dichloropropylene	ND		ug/m³	0.397	0.875	EPA TO-15	12/09/2024 09:00	12/09/2024 20:10	YR
							Certifications:	NELAC-NY12058,NJDEP-NY037		
110-82-7	Cyclohexane	ND		ug/m³	0.301	0.875	EPA TO-15	12/09/2024 09:00	12/09/2024 20:10	YR
							Certifications:	NELAC-NY12058,NJDEP-NY037		
124-48-1	Dibromochloromethane	ND		ug/m³	0.745	0.875	EPA TO-15	12/09/2024 09:00	12/09/2024 20:10	YR
							Certifications:	NELAC-NY12058,NJDEP-NY037		
75-71-8	**Dichlorodifluoromethane**	**2.29**		ug/m³	0.433	0.875	EPA TO-15	12/09/2024 09:00	12/09/2024 20:10	YR
							Certifications:	NELAC-NY12058,NJDEP-NY037		
141-78-6	*** Ethyl acetate**	**1.10**		ug/m³	0.631	0.875	EPA TO-15	12/09/2024 09:00	12/09/2024 20:10	YR
							Certifications:			

Sample Information

Client Sample ID: IA03_112624 **York Sample ID:** 24K1863-04

York Project (SDG) No.	Client Project ID	Matrix	Collection Date/Time	Date Received
24K1863	170361307	Indoor Ambient Air	November 26, 2024 8:17 am	11/26/2024

VOA, TO15 MASTER

Log-in Notes:

Sample Notes:

Sample Prepared by Method: EPA TO15 PREP

CAS No.	Parameter	Result	Flag	Units	Reported to LOQ	Dilution	Reference Method	Date/Time Prepared	Date/Time Analyzed	Analyst
100-41-4	Ethyl Benzene	ND		ug/m³	0.380	0.875	EPA TO-15	12/09/2024 09:00	12/09/2024 20:10	YR
							Certifications:	NELAC-NY12058,NJDEP-NY037		
87-68-3	Hexachlorobutadiene	ND		ug/m³	0.933	0.875	EPA TO-15	12/09/2024 09:00	12/09/2024 20:10	YR
							Certifications:	NELAC-NY12058,NJDEP-NY037		
67-63-0	**Isopropanol**	**3.66**		ug/m³	1.29	0.875	EPA TO-15	12/09/2024 09:00	12/09/2024 20:10	YR
							Certifications:	NELAC-NY12058,NJDEP-NY037		
80-62-6	**Methyl Methacrylate**	**0.788**		ug/m³	0.358	0.875	EPA TO-15	12/09/2024 09:00	12/09/2024 20:10	YR
							Certifications:	NELAC-NY12058,NJDEP-NY037		
1634-04-4	Methyl tert-butyl ether (MTBE)	ND		ug/m³	0.315	0.875	EPA TO-15	12/09/2024 09:00	12/09/2024 20:10	YR
							Certifications:	NELAC-NY12058,NJDEP-NY037		
75-09-2	Methylene chloride	ND		ug/m³	1.82	0.875	EPA TO-15	12/09/2024 09:00	12/09/2024 20:10	YR
							Certifications:	NELAC-NY12058,NJDEP-NY037		
142-82-5	n-Heptane	ND		ug/m³	0.359	0.875	EPA TO-15	12/09/2024 09:00	12/09/2024 20:10	YR
							Certifications:	NELAC-NY12058,NJDEP-NY037		
110-54-3	**n-Hexane**	**0.401**		ug/m³	0.308	0.875	EPA TO-15	12/09/2024 09:00	12/09/2024 20:10	YR
							Certifications:	NELAC-NY12058,NJDEP-NY037		
95-47-6	o-Xylene	ND		ug/m³	0.380	0.875	EPA TO-15	12/09/2024 09:00	12/09/2024 20:10	YR
							Certifications:	NELAC-NY12058,NJDEP-NY037		
179601-23-1	**p- & m- Xylenes**	**0.874**		ug/m³	0.760	0.875	EPA TO-15	12/09/2024 09:00	12/09/2024 20:10	YR
							Certifications:	NELAC-NY12058,NJDEP-NY037		
622-96-8	* p-Ethyltoluene	ND		ug/m³	0.430	0.875	EPA TO-15	12/09/2024 09:00	12/09/2024 20:10	YR
							Certifications:			
115-07-1	* Propylene	ND		ug/m³	0.151	0.875	EPA TO-15	12/09/2024 09:00	12/09/2024 20:10	YR
							Certifications:			
100-42-5	Styrene	ND		ug/m³	0.373	0.875	EPA TO-15	12/09/2024 09:00	12/09/2024 20:10	YR
							Certifications:	NELAC-NY12058,NJDEP-NY037		
127-18-4	Tetrachloroethylene	ND		ug/m³	0.593	0.875	EPA TO-15	12/09/2024 09:00	12/09/2024 20:10	YR
							Certifications:	NELAC-NY12058,NJDEP-NY037		
109-99-9	* Tetrahydrofuran	ND		ug/m³	0.516	0.875	EPA TO-15	12/09/2024 09:00	12/09/2024 20:10	YR
							Certifications:			
108-88-3	**Toluene**	**1.12**		ug/m³	0.330	0.875	EPA TO-15	12/09/2024 09:00	12/09/2024 20:10	YR
							Certifications:	NELAC-NY12058,NJDEP-NY037		
156-60-5	trans-1,2-Dichloroethylene	ND		ug/m³	0.347	0.875	EPA TO-15	12/09/2024 09:00	12/09/2024 20:10	YR
							Certifications:	NELAC-NY12058,NJDEP-NY037		
10061-02-6	trans-1,3-Dichloropropylene	ND		ug/m³	0.397	0.875	EPA TO-15	12/09/2024 09:00	12/09/2024 20:10	YR
							Certifications:	NELAC-NY12058,NJDEP-NY037		
79-01-6	**Trichloroethylene**	**4.23**		ug/m³	0.118	0.875	EPA TO-15	12/09/2024 09:00	12/09/2024 20:10	YR
							Certifications:	NELAC-NY12058,NJDEP-NY037		
75-69-4	**Trichlorofluoromethane (Freon 11)**	**1.18**		ug/m³	0.492	0.875	EPA TO-15	12/09/2024 09:00	12/09/2024 20:10	YR
							Certifications:	NELAC-NY12058,NJDEP-NY037		
108-05-4	Vinyl acetate	ND	TO-LCS -L	ug/m³	0.308	0.875	EPA TO-15	12/09/2024 09:00	12/09/2024 20:10	YR
							Certifications:	NELAC-NY12058,NJDEP-NY037		
593-60-2	Vinyl bromide	ND		ug/m³	0.383	0.875	EPA TO-15	12/09/2024 09:00	12/09/2024 20:10	YR
							Certifications:	NELAC-NY12058,NJDEP-NY037		

Sample Information

Client Sample ID: IA03_112624 **York Sample ID:** 24K1863-04

York Project (SDG) No.	Client Project ID	Matrix	Collection Date/Time	Date Received
24K1863	170361307	Indoor Ambient Air	November 26, 2024 8:17 am	11/26/2024

VOA, TO15 MASTER

Log-in Notes:

Sample Notes:

Sample Prepared by Method: EPA TO15 PREP

CAS No.	Parameter	Result	Flag	Units	Reported to LOQ	Dilution	Reference Method	Date/Time Prepared	Date/Time Analyzed	Analyst
75-01-4	Vinyl Chloride	ND		ug/m³	0.112	0.875	EPA TO-15	12/09/2024 09:00	12/09/2024 20:10	YR
							Certifications:	NELAC-NY12058,NJDEP-NY037		

Sample Information

Client Sample ID: IA04_112624 **York Sample ID:** 24K1863-05

York Project (SDG) No.	Client Project ID	Matrix	Collection Date/Time	Date Received
24K1863	170361307	Indoor Ambient Air	November 26, 2024 8:17 am	11/26/2024

VOA, TO15 MASTER

Log-in Notes:

Sample Notes:

Sample Prepared by Method: EPA TO15 PREP

CAS No.	Parameter	Result	Flag	Units	Reported to LOQ	Dilution	Reference Method	Date/Time Prepared	Date/Time Analyzed	Analyst
630-20-6	* 1,1,1,2-Tetrachloroethane	ND		ug/m³	0.649	0.945	EPA TO-15	12/09/2024 09:00	12/09/2024 20:55	YR
							Certifications:			
71-55-6	1,1,1-Trichloroethane	ND		ug/m³	0.516	0.945	EPA TO-15	12/09/2024 09:00	12/09/2024 20:55	YR
							Certifications:	NELAC-NY12058,NJDEP-NY037		
79-34-5	1,1,2,2-Tetrachloroethane	ND		ug/m³	0.649	0.945	EPA TO-15	12/09/2024 09:00	12/09/2024 20:55	YR
							Certifications:	NELAC-NY12058,NJDEP-NY037		
76-13-1	1,1,2-Trichloro-1,2,2-trifluoroethane (Freon 113)	ND		ug/m³	0.724	0.945	EPA TO-15	12/09/2024 09:00	12/09/2024 20:55	YR
							Certifications:	NELAC-NY12058,NJDEP-NY037		
79-00-5	1,1,2-Trichloroethane	ND		ug/m³	0.516	0.945	EPA TO-15	12/09/2024 09:00	12/09/2024 20:55	YR
							Certifications:	NELAC-NY12058,NJDEP-NY037		
75-34-3	1,1-Dichloroethane	ND		ug/m³	0.382	0.945	EPA TO-15	12/09/2024 09:00	12/09/2024 20:55	YR
							Certifications:	NELAC-NY12058,NJDEP-NY037		
75-35-4	1,1-Dichloroethylene	ND		ug/m³	0.187	0.945	EPA TO-15	12/09/2024 09:00	12/09/2024 20:55	YR
							Certifications:	NELAC-NY12058,NJDEP-NY037		
120-82-1	1,2,4-Trichlorobenzene	ND	TO-LCS-L	ug/m³	0.701	0.945	EPA TO-15	12/09/2024 09:00	12/09/2024 20:55	YR
							Certifications:	NELAC-NY12058,NJDEP-NY037		
95-63-6	1,2,4-Trimethylbenzene	ND		ug/m³	0.465	0.945	EPA TO-15	12/09/2024 09:00	12/09/2024 20:55	YR
							Certifications:	NELAC-NY12058,NJDEP-NY037		
106-93-4	1,2-Dibromoethane	ND		ug/m³	0.726	0.945	EPA TO-15	12/09/2024 09:00	12/09/2024 20:55	YR
							Certifications:	NELAC-NY12058,NJDEP-NY037		
95-50-1	1,2-Dichlorobenzene	ND		ug/m³	0.568	0.945	EPA TO-15	12/09/2024 09:00	12/09/2024 20:55	YR
							Certifications:	NELAC-NY12058,NJDEP-NY037		
107-06-2	1,2-Dichloroethane	ND		ug/m³	0.382	0.945	EPA TO-15	12/09/2024 09:00	12/09/2024 20:55	YR
							Certifications:	NELAC-NY12058,NJDEP-NY037		
78-87-5	1,2-Dichloropropane	ND		ug/m³	0.437	0.945	EPA TO-15	12/09/2024 09:00	12/09/2024 20:55	YR
							Certifications:	NELAC-NY12058,NJDEP-NY037		
76-14-2	1,2-Dichlorotetrafluoroethane	ND		ug/m³	0.661	0.945	EPA TO-15	12/09/2024 09:00	12/09/2024 20:55	YR
							Certifications:	NELAC-NY12058,NJDEP-NY037		
108-67-8	1,3,5-Trimethylbenzene	ND		ug/m³	0.465	0.945	EPA TO-15	12/09/2024 09:00	12/09/2024 20:55	YR
							Certifications:	NELAC-NY12058,NJDEP-NY037		
106-99-0	1,3-Butadiene	ND		ug/m³	0.627	0.945	EPA TO-15	12/09/2024 09:00	12/09/2024 20:55	YR
							Certifications:	NELAC-NY12058,NJDEP-NY037		
541-73-1	1,3-Dichlorobenzene	ND		ug/m³	0.568	0.945	EPA TO-15	12/09/2024 09:00	12/09/2024 20:55	YR
							Certifications:	NELAC-NY12058,NJDEP-NY037		
142-28-9	* 1,3-Dichloropropane	ND		ug/m³	0.437	0.945	EPA TO-15	12/09/2024 09:00	12/09/2024 20:55	YR
							Certifications:			
106-46-7	1,4-Dichlorobenzene	ND		ug/m³	0.568	0.945	EPA TO-15	12/09/2024 09:00	12/09/2024 20:55	YR
							Certifications:	NELAC-NY12058,NJDEP-NY037		
123-91-1	1,4-Dioxane	ND		ug/m³	0.681	0.945	EPA TO-15	12/09/2024 09:00	12/09/2024 20:55	YR
							Certifications:	NELAC-NY12058,NJDEP-NY037		
78-93-3	**2-Butanone**	**0.892**		ug/m³	0.279	0.945	EPA TO-15	12/09/2024 09:00	12/09/2024 20:55	YR
							Certifications:	NELAC-NY12058,NJDEP-NY037		
591-78-6	* 2-Hexanone	ND		ug/m³	0.774	0.945	EPA TO-15	12/09/2024 09:00	12/09/2024 20:55	YR
							Certifications:			

Sample Information

Client Sample ID: IA04_112624 **York Sample ID:** 24K1863-05

York Project (SDG) No.	Client Project ID	Matrix	Collection Date/Time	Date Received
24K1863	170361307	Indoor Ambient Air	November 26, 2024 8:17 am	11/26/2024

VOA, TO15 MASTER

Log-in Notes:

Sample Notes:

Sample Prepared by Method: EPA TO15 PREP

CAS No.	Parameter	Result	Flag	Units	Reported to LOQ	Dilution	Reference Method	Date/Time Prepared	Date/Time Analyzed	Analyst
107-05-1	3-Chloropropene	ND		ug/m³	1.48	0.945	EPA TO-15	12/09/2024 09:00	12/09/2024 20:55	YR
							Certifications:	NELAC-NY12058,NJDEP-NY037		
108-10-1	4-Methyl-2-pentanone	ND		ug/m³	0.387	0.945	EPA TO-15	12/09/2024 09:00	12/09/2024 20:55	YR
							Certifications:	NELAC-NY12058,NJDEP-NY037		
67-64-1	**Acetone**	**21.8**		ug/m³	1.80	0.945	EPA TO-15	12/09/2024 09:00	12/09/2024 20:55	YR
							Certifications:	NELAC-NY12058,NJDEP-NY037		
107-13-1	Acrylonitrile	ND		ug/m³	2.67	0.945	EPA TO-15	12/09/2024 09:00	12/09/2024 20:55	YR
							Certifications:	NELAC-NY12058,NJDEP-NY037		
71-43-2	**Benzene**	**0.936**		ug/m³	0.302	0.945	EPA TO-15	12/09/2024 09:00	12/09/2024 20:55	YR
							Certifications:	NELAC-NY12058,NJDEP-NY037		
100-44-7	Benzyl chloride	ND		ug/m³	0.489	0.945	EPA TO-15	12/09/2024 09:00	12/09/2024 20:55	YR
							Certifications:	NELAC-NY12058,NJDEP-NY037		
75-27-4	Bromodichloromethane	ND		ug/m³	0.633	0.945	EPA TO-15	12/09/2024 09:00	12/09/2024 20:55	YR
							Certifications:	NELAC-NY12058,NJDEP-NY037		
75-25-2	Bromoform	ND		ug/m³	0.977	0.945	EPA TO-15	12/09/2024 09:00	12/09/2024 20:55	YR
							Certifications:	NELAC-NY12058,NJDEP-NY037		
74-83-9	Bromomethane	ND		ug/m³	0.367	0.945	EPA TO-15	12/09/2024 09:00	12/09/2024 20:55	YR
							Certifications:	NELAC-NY12058,NJDEP-NY037		
75-15-0	Carbon disulfide	ND		ug/m³	0.294	0.945	EPA TO-15	12/09/2024 09:00	12/09/2024 20:55	YR
							Certifications:	NELAC-NY12058,NJDEP-NY037		
56-23-5	**Carbon tetrachloride**	**0.416**		ug/m³	0.149	0.945	EPA TO-15	12/09/2024 09:00	12/09/2024 20:55	YR
							Certifications:	NELAC-NY12058,NJDEP-NY037		
108-90-7	Chlorobenzene	ND		ug/m³	0.435	0.945	EPA TO-15	12/09/2024 09:00	12/09/2024 20:55	YR
							Certifications:	NELAC-NY12058,NJDEP-NY037		
75-00-3	Chloroethane	ND		ug/m³	0.249	0.945	EPA TO-15	12/09/2024 09:00	12/09/2024 20:55	YR
							Certifications:	NELAC-NY12058,NJDEP-NY037		
67-66-3	Chloroform	ND		ug/m³	0.461	0.945	EPA TO-15	12/09/2024 09:00	12/09/2024 20:55	YR
							Certifications:	NELAC-NY12058,NJDEP-NY037		
74-87-3	**Chloromethane**	**1.68**	TO-CCV, TO-LCS-H	ug/m³	0.195	0.945	EPA TO-15	12/09/2024 09:00	12/09/2024 20:55	YR
							Certifications:	NELAC-NY12058,NJDEP-NY037		
156-59-2	cis-1,2-Dichloroethylene	ND		ug/m³	0.187	0.945	EPA TO-15	12/09/2024 09:00	12/09/2024 20:55	YR
							Certifications:	NELAC-NY12058,NJDEP-NY037		
10061-01-5	cis-1,3-Dichloropropylene	ND		ug/m³	0.429	0.945	EPA TO-15	12/09/2024 09:00	12/09/2024 20:55	YR
							Certifications:	NELAC-NY12058,NJDEP-NY037		
110-82-7	Cyclohexane	ND		ug/m³	0.325	0.945	EPA TO-15	12/09/2024 09:00	12/09/2024 20:55	YR
							Certifications:	NELAC-NY12058,NJDEP-NY037		
124-48-1	Dibromochloromethane	ND		ug/m³	0.805	0.945	EPA TO-15	12/09/2024 09:00	12/09/2024 20:55	YR
							Certifications:	NELAC-NY12058,NJDEP-NY037		
75-71-8	**Dichlorodifluoromethane**	**2.29**		ug/m³	0.467	0.945	EPA TO-15	12/09/2024 09:00	12/09/2024 20:55	YR
							Certifications:	NELAC-NY12058,NJDEP-NY037		
141-78-6	*** Ethyl acetate**	**0.987**		ug/m³	0.681	0.945	EPA TO-15	12/09/2024 09:00	12/09/2024 20:55	YR
							Certifications:			

Sample Information

Client Sample ID: IA04_112624 **York Sample ID:** 24K1863-05

York Project (SDG) No.	Client Project ID	Matrix	Collection Date/Time	Date Received
24K1863	170361307	Indoor Ambient Air	November 26, 2024 8:17 am	11/26/2024

VOA, TO15 MASTER

Log-in Notes:

Sample Notes:

Sample Prepared by Method: EPA TO15 PREP

CAS No.	Parameter	Result	Flag	Units	Reported to LOQ	Dilution	Reference Method	Date/Time Prepared	Date/Time Analyzed	Analyst
100-41-4	Ethyl Benzene	ND		ug/m³	0.410	0.945	EPA TO-15	12/09/2024 09:00	12/09/2024 20:55	YR
							Certifications:	NELAC-NY12058,NJDEP-NY037		
87-68-3	Hexachlorobutadiene	ND		ug/m³	1.01	0.945	EPA TO-15	12/09/2024 09:00	12/09/2024 20:55	YR
							Certifications:	NELAC-NY12058,NJDEP-NY037		
67-63-0	**Isopropanol**	**2.83**		ug/m³	1.39	0.945	EPA TO-15	12/09/2024 09:00	12/09/2024 20:55	YR
							Certifications:	NELAC-NY12058,NJDEP-NY037		
80-62-6	**Methyl Methacrylate**	**0.890**		ug/m³	0.387	0.945	EPA TO-15	12/09/2024 09:00	12/09/2024 20:55	YR
							Certifications:	NELAC-NY12058,NJDEP-NY037		
1634-04-4	Methyl tert-butyl ether (MTBE)	ND		ug/m³	0.341	0.945	EPA TO-15	12/09/2024 09:00	12/09/2024 20:55	YR
							Certifications:	NELAC-NY12058,NJDEP-NY037		
75-09-2	Methylene chloride	ND		ug/m³	1.97	0.945	EPA TO-15	12/09/2024 09:00	12/09/2024 20:55	YR
							Certifications:	NELAC-NY12058,NJDEP-NY037		
142-82-5	n-Heptane	ND		ug/m³	0.387	0.945	EPA TO-15	12/09/2024 09:00	12/09/2024 20:55	YR
							Certifications:	NELAC-NY12058,NJDEP-NY037		
110-54-3	**n-Hexane**	**0.366**		ug/m³	0.333	0.945	EPA TO-15	12/09/2024 09:00	12/09/2024 20:55	YR
							Certifications:	NELAC-NY12058,NJDEP-NY037		
95-47-6	o-Xylene	ND		ug/m³	0.410	0.945	EPA TO-15	12/09/2024 09:00	12/09/2024 20:55	YR
							Certifications:	NELAC-NY12058,NJDEP-NY037		
179601-23-1	**p- & m- Xylenes**	**0.903**		ug/m³	0.821	0.945	EPA TO-15	12/09/2024 09:00	12/09/2024 20:55	YR
							Certifications:	NELAC-NY12058,NJDEP-NY037		
622-96-8	* p-Ethyltoluene	ND		ug/m³	0.465	0.945	EPA TO-15	12/09/2024 09:00	12/09/2024 20:55	YR
							Certifications:			
115-07-1	* Propylene	ND		ug/m³	0.163	0.945	EPA TO-15	12/09/2024 09:00	12/09/2024 20:55	YR
							Certifications:			
100-42-5	Styrene	ND		ug/m³	0.403	0.945	EPA TO-15	12/09/2024 09:00	12/09/2024 20:55	YR
							Certifications:	NELAC-NY12058,NJDEP-NY037		
127-18-4	Tetrachloroethylene	ND		ug/m³	0.641	0.945	EPA TO-15	12/09/2024 09:00	12/09/2024 20:55	YR
							Certifications:	NELAC-NY12058,NJDEP-NY037		
109-99-9	* Tetrahydrofuran	ND		ug/m³	0.557	0.945	EPA TO-15	12/09/2024 09:00	12/09/2024 20:55	YR
							Certifications:			
108-88-3	**Toluene**	**1.32**		ug/m³	0.356	0.945	EPA TO-15	12/09/2024 09:00	12/09/2024 20:55	YR
							Certifications:	NELAC-NY12058,NJDEP-NY037		
156-60-5	trans-1,2-Dichloroethylene	ND		ug/m³	0.375	0.945	EPA TO-15	12/09/2024 09:00	12/09/2024 20:55	YR
							Certifications:	NELAC-NY12058,NJDEP-NY037		
10061-02-6	trans-1,3-Dichloropropylene	ND		ug/m³	0.429	0.945	EPA TO-15	12/09/2024 09:00	12/09/2024 20:55	YR
							Certifications:	NELAC-NY12058,NJDEP-NY037		
79-01-6	**Trichloroethylene**	**4.98**		ug/m³	0.127	0.945	EPA TO-15	12/09/2024 09:00	12/09/2024 20:55	YR
							Certifications:	NELAC-NY12058,NJDEP-NY037		
75-69-4	**Trichlorofluoromethane (Freon 11)**	**1.17**		ug/m³	0.531	0.945	EPA TO-15	12/09/2024 09:00	12/09/2024 20:55	YR
							Certifications:	NELAC-NY12058,NJDEP-NY037		
108-05-4	Vinyl acetate	ND	TO-LCS -L	ug/m³	0.333	0.945	EPA TO-15	12/09/2024 09:00	12/09/2024 20:55	YR
							Certifications:	NELAC-NY12058,NJDEP-NY037		
593-60-2	Vinyl bromide	ND		ug/m³	0.413	0.945	EPA TO-15	12/09/2024 09:00	12/09/2024 20:55	YR
							Certifications:	NELAC-NY12058,NJDEP-NY037		

Sample Information

Client Sample ID: IA04_112624 **York Sample ID:** 24K1863-05

York Project (SDG) No.	Client Project ID	Matrix	Collection Date/Time	Date Received
24K1863	170361307	Indoor Ambient Air	November 26, 2024 8:17 am	11/26/2024

VOA, TO15 MASTER

Log-in Notes:

Sample Notes:

Sample Prepared by Method: EPA TO15 PREP

CAS No.	Parameter	Result	Flag	Units	Reported to LOQ	Dilution	Reference Method	Date/Time Prepared	Date/Time Analyzed	Analyst
75-01-4	Vinyl Chloride	ND		ug/m³	0.121	0.945	EPA TO-15	12/09/2024 09:00	12/09/2024 20:55	YR
							Certifications:	NELAC-NY12058,NJDEP-NY037		

Analytical Batch Summary

Batch ID: BK41617 **Preparation Method:** EPA TO15 PREP **Prepared By:** YR

YORK Sample ID	Client Sample ID	Preparation Date
24K1748-02	CAN 49978 / FC 17988	11/20/24
24K1748-03	CAN 37386 / FC 20442	11/20/24
24K1748-04	CAN 49582 / FC 20239	11/20/24
24K1748-06	CAN 22080 / FC 17179	11/20/24
24K1748-07	CAN 16956 / FC 19392	11/20/24
BK41617-BLK1	Blank	11/20/24
BK41617-BS1	LCS	11/20/24

Batch ID: BL40674 **Preparation Method:** EPA TO15 PREP **Prepared By:** YR

YORK Sample ID	Client Sample ID	Preparation Date
24K1863-03	IA02_112624	12/09/24
24K1863-04	IA03_112624	12/09/24
24K1863-05	IA04_112624	12/09/24
BL40674-BLK1	Blank	12/09/24
BL40674-BS1	LCS	12/09/24

Batch ID: BL40699 **Preparation Method:** EPA TO15 PREP **Prepared By:** BMC

YORK Sample ID	Client Sample ID	Preparation Date
24K1863-01	AA01_112624	12/09/24
24K1863-02	IA01_112624	12/09/24
BL40699-BLK1	Blank	12/09/24
BL40699-BS1	LCS	12/09/24

Volatile Organic Compounds in Air by GC/MS - Quality Control Data

York Analytical Laboratories, Inc. - Stratford

Analyte	Result	Reporting Limit	Units	Spike Level	Source* Result	%REC	%REC Limits	Flag	RPD	RPD Limit	Flag
Batch BK41617 - EPA TO15 PREP											
Blank (BK41617-BLK1) Blank									Prepared & Analyzed: 11/20/2024		
1,1,1,2-Tetrachloroethane	ND	0.687	ug/m³								
1,1,1-Trichloroethane	ND	0.546	"								
1,1,2,2-Tetrachloroethane	ND	0.687	"								
1,1,2-Trichloro-1,2,2-trifluoroethane (Freon 113)	ND	0.766	"								
1,1,2-Trichloroethane	ND	0.546	"								
1,1-Dichloroethane	ND	0.405	"								
1,1-Dichloroethylene	ND	0.198	"								
1,2,4-Trichlorobenzene	ND	0.742	"								
1,2,4-Trimethylbenzene	ND	0.492	"								
1,2-Dibromoethane	ND	0.768	"								
1,2-Dichlorobenzene	ND	0.601	"								
1,2-Dichloroethane	ND	0.405	"								
1,2-Dichloropropane	ND	0.462	"								
1,2-Dichlorotetrafluoroethane	ND	0.699	"								
1,3,5-Trimethylbenzene	ND	0.492	"								
1,3-Butadiene	ND	0.664	"								
1,3-Dichlorobenzene	ND	0.601	"								
1,3-Dichloropropane	ND	0.462	"								
1,4-Dichlorobenzene	ND	0.601	"								
1,4-Dioxane	ND	0.721	"								
2-Butanone	ND	0.295	"								
2-Hexanone	ND	0.819	"								
3-Chloropropene	ND	1.57	"								
4-Methyl-2-pentanone	ND	0.410	"								
Acetone	ND	0.475	"								
Acrylonitrile	ND	0.217	"								
Benzene	ND	0.319	"								
Benzyl chloride	ND	0.518	"								
Bromodichloromethane	ND	0.670	"								
Bromoform	ND	1.03	"								
Bromomethane	ND	0.388	"								
Carbon disulfide	ND	0.311	"								
Carbon tetrachloride	ND	0.157	"								
Chlorobenzene	ND	0.460	"								
Chloroethane	ND	0.264	"								
Chloroform	ND	0.488	"								
Chloromethane	ND	0.207	"								
cis-1,2-Dichloroethylene	ND	0.198	"								
cis-1,3-Dichloropropylene	ND	0.454	"								
Cyclohexane	ND	0.344	"								
Dibromochloromethane	ND	0.852	"								
Dichlorodifluoromethane	ND	0.495	"								
Ethyl acetate	ND	0.721	"								
Ethyl Benzene	ND	0.434	"								
Hexachlorobutadiene	ND	1.07	"								
Isopropanol	ND	0.492	"								
Methyl Methacrylate	ND	0.409	"								
Methyl tert-butyl ether (MTBE)	ND	0.361	"								
Methylene chloride	ND	0.695	"								
n-Heptane	ND	0.410	"								

Volatile Organic Compounds in Air by GC/MS - Quality Control Data

York Analytical Laboratories, Inc. - Stratford

Analyte	Result	Reporting Limit	Units	Spike Level	Source* Result	%REC	%REC Limits	Flag	RPD	RPD Limit	Flag
Batch BK41617 - EPA TO15 PREP											
Blank (BK41617-BLK1) Blank								Prepared & Analyzed: 11/20/2024			
n-Hexane	ND	0.352	ug/m³								
o-Xylene	ND	0.434	"								
p- & m- Xylenes	ND	0.868	"								
p-Ethyltoluene	ND	0.492	"								
Propylene	ND	0.172	"								
Styrene	ND	0.426	"								
Tetrachloroethylene	ND	0.678	"								
Tetrahydrofuran	ND	0.590	"								
Toluene	ND	0.377	"								
trans-1,2-Dichloroethylene	ND	0.396	"								
trans-1,3-Dichloropropylene	ND	0.454	"								
Trichloroethylene	ND	0.134	"								
Trichlorofluoromethane (Freon 11)	ND	0.562	"								
Vinyl acetate	ND	0.352	"								
Vinyl bromide	ND	0.437	"								
Vinyl Chloride	ND	0.128	"								
LCS (BK41617-BS1) LCS								Prepared & Analyzed: 11/20/2024			
1,1,1,2-Tetrachloroethane	9.56		ppbv	10.0		95.6	70-130				
1,1,1-Trichloroethane	10.3		"	10.0		103	70-130				
1,1,2,2-Tetrachloroethane	8.68		"	10.0		86.8	70-130				
1,1,2-Trichloro-1,2,2-trifluoroethane (Freon 113)	10.1		"	10.0		101	70-130				
1,1,2-Trichloroethane	9.37		"	10.0		93.7	70-130				
1,1-Dichloroethane	8.98		"	10.0		89.8	70-130				
1,1-Dichloroethylene	9.14		"	10.0		91.4	70-130				
1,2,4-Trichlorobenzene	6.05		"	10.0		60.5	70-130	Low Bias			
1,2,4-Trimethylbenzene	9.32		"	10.0		93.2	70-130				
1,2-Dibromoethane	9.21		"	10.0		92.1	70-130				
1,2-Dichlorobenzene	7.97		"	10.0		79.7	70-130				
1,2-Dichloroethane	9.43		"	10.0		94.3	70-130				
1,2-Dichloropropane	8.58		"	10.0		85.8	70-130				
1,2-Dichlorotetrafluoroethane	11.1		"	10.0		111	70-130				
1,3,5-Trimethylbenzene	9.15		"	10.0		91.5	70-130				
1,3-Butadiene	8.99		"	10.0		89.9	70-130				
1,3-Dichlorobenzene	9.64		"	10.0		96.4	70-130				
1,3-Dichloropropane	8.39		"	10.0		83.9	70-130				
1,4-Dichlorobenzene	9.62		"	10.0		96.2	70-130				
1,4-Dioxane	8.35		"	10.0		83.5	70-130				
2-Butanone	8.24		"	10.0		82.4	70-130				
2-Hexanone	8.10		"	10.0		81.0	70-130				
3-Chloropropene	8.62		"	10.0		86.2	70-130				
4-Methyl-2-pentanone	7.82		"	10.0		78.2	70-130				
Acetone	8.89		"	10.0		88.9	70-130				
Acrylonitrile	8.64		"	10.0		86.4	70-130				
Benzene	9.77		"	10.0		97.7	70-130				
Benzyl chloride	7.39		"	10.0		73.9	70-130				
Bromodichloromethane	9.69		"	10.0		96.9	70-130				
Bromoform	3.55		"	10.0		35.5	70-130	Low Bias			
Bromomethane	9.76		"	10.0		97.6	70-130				
Carbon disulfide	9.30		"	10.0		93.0	70-130				
Carbon tetrachloride	9.57		"	10.0		95.7	70-130				

Volatile Organic Compounds in Air by GC/MS - Quality Control Data

York Analytical Laboratories, Inc. - Stratford

Analyte	Result	Reporting Limit	Units	Spike Level	Source* Result	%REC	%REC Limits	Flag	RPD	RPD Limit	Flag
Batch BK41617 - EPA TO15 PREP											
LCS (BK41617-BS1) LCS								Prepared & Analyzed: 11/20/2024			
Chlorobenzene	8.90		ppbv	10.0		89.0	70-130				
Chloroethane	9.22		"	10.0		92.2	70-130				
Chloroform	9.84		"	10.0		98.4	70-130				
Chloromethane	15.5		"	10.0		155	70-130	High Bias			
cis-1,2-Dichloroethylene	9.34		"	10.0		93.4	70-130				
cis-1,3-Dichloropropylene	8.83		"	10.0		88.3	70-130				
Cyclohexane	9.18		"	10.0		91.8	70-130				
Dibromochloromethane	6.40		"	10.0		64.0	70-130	Low Bias			
Dichlorodifluoromethane	9.48		"	10.0		94.8	70-130				
Ethyl acetate	9.98		"	10.0		99.8	70-130				
Ethyl Benzene	8.68		"	10.0		86.8	70-130				
Hexachlorobutadiene	7.30		"	10.0		73.0	70-130				
Isopropanol	8.17		"	10.0		81.7	70-130				
Methyl Methacrylate	8.40		"	10.0		84.0	70-130				
Methyl tert-butyl ether (MTBE)	9.71		"	10.0		97.1	70-130				
Methylene chloride	8.89		"	10.0		88.9	70-130				
n-Heptane	9.19		"	10.0		91.9	70-130				
n-Hexane	9.32		"	10.0		93.2	70-130				
o-Xylene	9.14		"	10.0		91.4	70-130				
p- & m- Xylenes	18.9		"	20.0		94.3	70-130				
p-Ethyltoluene	9.21		"	10.0		92.1	70-130				
Propylene	7.73		"	10.0		77.3	70-130				
Styrene	9.73		"	10.0		97.3	70-130				
Tetrachloroethylene	9.62		"	10.0		96.2	70-130				
Tetrahydrofuran	8.39		"	10.0		83.9	70-130				
Toluene	8.70		"	10.0		87.0	70-130				
trans-1,2-Dichloroethylene	9.28		"	10.0		92.8	70-130				
trans-1,3-Dichloropropylene	8.78		"	10.0		87.8	70-130				
Trichloroethylene	8.90		"	10.0		89.0	70-130				
Trichlorofluoromethane (Freon 11)	10.6		"	10.0		106	70-130				
Vinyl acetate	5.55		"	10.0		55.5	70-130	Low Bias			
Vinyl bromide	10.5		"	10.0		105	70-130				
Vinyl Chloride	9.07		"	10.0		90.7	70-130				

Volatile Organic Compounds in Air by GC/MS - Quality Control Data

York Analytical Laboratories, Inc. - Stratford

Analyte	Result	Reporting Limit	Units	Spike Level	Source* Result	%REC	%REC Limits	Flag	RPD	RPD Limit	Flag
Batch BL40674 - EPA TO15 PREP											
Blank (BL40674-BLK1) Blank									Prepared & Analyzed: 12/09/2024		
1,1,1,2-Tetrachloroethane	ND	0.687	ug/m³								
1,1,1-Trichloroethane	ND	0.546	"								
1,1,2,2-Tetrachloroethane	ND	0.687	"								
1,1,2-Trichloro-1,2,2-trifluoroethane (Freon 113)	ND	0.766	"								
1,1,2-Trichloroethane	ND	0.546	"								
1,1-Dichloroethane	ND	0.405	"								
1,1-Dichloroethylene	ND	0.198	"								
1,2,4-Trichlorobenzene	ND	0.742	"								
1,2,4-Trimethylbenzene	ND	0.492	"								
1,2-Dibromoethane	ND	0.768	"								
1,2-Dichlorobenzene	ND	0.601	"								
1,2-Dichloroethane	ND	0.405	"								
1,2-Dichloropropane	ND	0.462	"								
1,2-Dichlorotetrafluoroethane	ND	0.699	"								
1,3,5-Trimethylbenzene	ND	0.492	"								
1,3-Butadiene	ND	0.664	"								
1,3-Dichlorobenzene	ND	0.601	"								
1,3-Dichloropropane	ND	0.462	"								
1,4-Dichlorobenzene	ND	0.601	"								
1,4-Dioxane	ND	0.721	"								
2-Butanone	ND	0.295	"								
2-Hexanone	ND	0.819	"								
3-Chloropropene	ND	1.57	"								
4-Methyl-2-pentanone	ND	0.410	"								
Acetone	ND	1.90	"								
Acrylonitrile	ND	2.82	"								
Benzene	ND	0.319	"								
Benzyl chloride	ND	0.518	"								
Bromodichloromethane	ND	0.670	"								
Bromoform	ND	1.03	"								
Bromomethane	ND	0.388	"								
Carbon disulfide	ND	0.311	"								
Carbon tetrachloride	ND	0.157	"								
Chlorobenzene	ND	0.460	"								
Chloroethane	ND	0.264	"								
Chloroform	ND	0.488	"								
Chloromethane	ND	0.207	"								
cis-1,2-Dichloroethylene	ND	0.198	"								
cis-1,3-Dichloropropylene	ND	0.454	"								
Cyclohexane	ND	0.344	"								
Dibromochloromethane	ND	0.852	"								
Dichlorodifluoromethane	ND	0.495	"								
Ethyl acetate	ND	0.721	"								
Ethyl Benzene	ND	0.434	"								
Hexachlorobutadiene	ND	1.07	"								
Isopropanol	ND	1.47	"								
Methyl Methacrylate	ND	0.409	"								
Methyl tert-butyl ether (MTBE)	ND	0.361	"								
Methylene chloride	ND	2.08	"								
n-Heptane	ND	0.410	"								
n-Hexane	ND	0.352	"								

Volatile Organic Compounds in Air by GC/MS - Quality Control Data

York Analytical Laboratories, Inc. - Stratford

Analyte	Result	Reporting Limit	Units	Spike Level	Source* Result	%REC	%REC Limits	Flag	RPD	RPD Limit	Flag
Batch BL40674 - EPA TO15 PREP											
Blank (BL40674-BLK1) Blank								Prepared & Analyzed: 12/09/2024			
o-Xylene	ND	0.434	ug/m³								
p- & m- Xylenes	ND	0.868	"								
p-Ethyltoluene	ND	0.492	"								
Propylene	ND	0.172	"								
Styrene	ND	0.426	"								
Tetrachloroethylene	ND	0.678	"								
Tetrahydrofuran	ND	0.590	"								
Toluene	ND	0.377	"								
trans-1,2-Dichloroethylene	ND	0.396	"								
trans-1,3-Dichloropropylene	ND	0.454	"								
Trichloroethylene	ND	0.134	"								
Trichlorofluoromethane (Freon 11)	ND	0.562	"								
Vinyl acetate	ND	0.352	"								
Vinyl bromide	ND	0.437	"								
Vinyl Chloride	ND	0.128	"								
LCS (BL40674-BS1) LCS								Prepared & Analyzed: 12/09/2024			
1,1,1,2-Tetrachloroethane	10.1		ppbv	10.0		101	70-130				
1,1,1-Trichloroethane	11.5		"	10.0		115	70-130				
1,1,2,2-Tetrachloroethane	9.44		"	10.0		94.4	70-130				
1,1,2-Trichloro-1,2,2-trifluoroethane (Freon 113)	11.4		"	10.0		114	70-130				
1,1,2-Trichloroethane	10.0		"	10.0		100	70-130				
1,1-Dichloroethane	10.3		"	10.0		103	70-130				
1,1-Dichloroethylene	10.3		"	10.0		103	70-130				
1,2,4-Trichlorobenzene	6.99		"	10.0		69.9	70-130	Low Bias			
1,2,4-Trimethylbenzene	9.99		"	10.0		99.9	70-130				
1,2-Dibromoethane	9.81		"	10.0		98.1	70-130				
1,2-Dichlorobenzene	8.68		"	10.0		86.8	70-130				
1,2-Dichloroethane	10.5		"	10.0		105	70-130				
1,2-Dichloropropane	9.44		"	10.0		94.4	70-130				
1,2-Dichlorotetrafluoroethane	13.0		"	10.0		130	70-130				
1,3,5-Trimethylbenzene	9.45		"	10.0		94.5	70-130				
1,3-Butadiene	10.6		"	10.0		106	70-130				
1,3-Dichlorobenzene	10.4		"	10.0		104	70-130				
1,3-Dichloropropane	9.06		"	10.0		90.6	70-130				
1,4-Dichlorobenzene	10.4		"	10.0		104	70-130				
1,4-Dioxane	9.01		"	10.0		90.1	70-130				
2-Butanone	9.55		"	10.0		95.5	70-130				
2-Hexanone	8.75		"	10.0		87.5	70-130				
3-Chloropropene	9.99		"	10.0		99.9	70-130				
4-Methyl-2-pentanone	8.53		"	10.0		85.3	70-130				
Acetone	10.0		"	10.0		100	70-130				
Acrylonitrile	9.76		"	10.0		97.6	70-130				
Benzene	11.1		"	10.0		111	70-130				
Benzyl chloride	8.32		"	10.0		83.2	70-130				
Bromodichloromethane	10.8		"	10.0		108	70-130				
Bromoform	9.07		"	10.0		90.7	70-130				
Bromomethane	10.9		"	10.0		109	70-130				
Carbon disulfide	10.7		"	10.0		107	70-130				
Carbon tetrachloride	10.5		"	10.0		105	70-130				
Chlorobenzene	9.43		"	10.0		94.3	70-130				

Volatile Organic Compounds in Air by GC/MS - Quality Control Data

York Analytical Laboratories, Inc. - Stratford

Analyte	Result	Reporting Limit	Units	Spike Level	Source* Result	%REC	%REC Limits	Flag	RPD	RPD Limit	Flag
Batch BL40674 - EPA TO15 PREP											
LCS (BL40674-BS1) LCS							Prepared & Analyzed: 12/09/2024				
Chloroethane	10.7		ppbv	10.0		107	70-130				
Chloroform	11.0		"	10.0		110	70-130				
Chloromethane	13.3		"	10.0		133	70-130	High Bias			
cis-1,2-Dichloroethylene	10.5		"	10.0		105	70-130				
cis-1,3-Dichloropropylene	9.52		"	10.0		95.2	70-130				
Cyclohexane	10.5		"	10.0		105	70-130				
Dibromochloromethane	8.59		"	10.0		85.9	70-130				
Dichlorodifluoromethane	11.4		"	10.0		114	70-130				
Ethyl acetate	11.8		"	10.0		118	70-130				
Ethyl Benzene	9.23		"	10.0		92.3	70-130				
Hexachlorobutadiene	9.07		"	10.0		90.7	70-130				
Isopropanol	9.32		"	10.0		93.2	70-130				
Methyl Methacrylate	9.21		"	10.0		92.1	70-130				
Methyl tert-butyl ether (MTBE)	11.1		"	10.0		111	70-130				
Methylene chloride	10.2		"	10.0		102	70-130				
n-Heptane	10.6		"	10.0		106	70-130				
n-Hexane	10.7		"	10.0		107	70-130				
o-Xylene	9.84		"	10.0		98.4	70-130				
p- & m- Xylenes	20.1		"	20.0		101	70-130				
p-Ethyltoluene	10.1		"	10.0		101	70-130				
Propylene	9.45		"	10.0		94.5	70-130				
Styrene	10.5		"	10.0		105	70-130				
Tetrachloroethylene	10.2		"	10.0		102	70-130				
Tetrahydrofuran	9.70		"	10.0		97.0	70-130				
Toluene	9.24		"	10.0		92.4	70-130				
trans-1,2-Dichloroethylene	10.6		"	10.0		106	70-130				
trans-1,3-Dichloropropylene	9.46		"	10.0		94.6	70-130				
Trichloroethylene	9.46		"	10.0		94.6	70-130				
Trichlorofluoromethane (Freon 11)	11.8		"	10.0		118	70-130				
Vinyl acetate	5.94		"	10.0		59.4	70-130	Low Bias			
Vinyl bromide	11.6		"	10.0		116	70-130				
Vinyl Chloride	10.6		"	10.0		106	70-130				

Volatile Organic Compounds in Air by GC/MS - Quality Control Data

York Analytical Laboratories, Inc. - Stratford

Analyte	Result	Reporting Limit	Units	Spike Level	Source* Result	%REC	%REC Limits	Flag	RPD	RPD Limit	Flag
Batch BL40699 - EPA TO15 PREP											
Blank (BL40699-BLK1) Blank									Prepared & Analyzed: 12/09/2024		
1,1,1,2-Tetrachloroethane	ND	0.687	ug/m³								
1,1,1-Trichloroethane	ND	0.546	"								
1,1,2,2-Tetrachloroethane	ND	0.687	"								
1,1,2-Trichloro-1,2,2-trifluoroethane (Freon 113)	ND	0.766	"								
1,1,2-Trichloroethane	ND	0.546	"								
1,1-Dichloroethane	ND	0.405	"								
1,1-Dichloroethylene	ND	0.198	"								
1,2,4-Trichlorobenzene	ND	0.742	"								
1,2,4-Trimethylbenzene	ND	0.492	"								
1,2-Dibromoethane	ND	0.768	"								
1,2-Dichlorobenzene	ND	0.601	"								
1,2-Dichloroethane	ND	0.405	"								
1,2-Dichloropropane	ND	0.462	"								
1,2-Dichlorotetrafluoroethane	ND	0.699	"								
1,3,5-Trimethylbenzene	ND	0.492	"								
1,3-Butadiene	ND	0.664	"								
1,3-Dichlorobenzene	ND	0.601	"								
1,3-Dichloropropane	ND	0.462	"								
1,4-Dichlorobenzene	ND	0.601	"								
1,4-Dioxane	ND	0.721	"								
2-Butanone	ND	0.295	"								
2-Hexanone	ND	0.819	"								
3-Chloropropene	ND	1.57	"								
4-Methyl-2-pentanone	ND	0.410	"								
Acetone	ND	1.90	"								
Acrylonitrile	ND	2.82	"								
Benzene	ND	0.319	"								
Benzyl chloride	ND	0.518	"								
Bromodichloromethane	ND	0.670	"								
Bromoform	ND	1.03	"								
Bromomethane	ND	0.388	"								
Carbon disulfide	ND	0.311	"								
Carbon tetrachloride	ND	0.157	"								
Chlorobenzene	ND	0.460	"								
Chloroethane	ND	0.264	"								
Chloroform	ND	0.488	"								
Chloromethane	ND	0.207	"								
cis-1,2-Dichloroethylene	ND	0.198	"								
cis-1,3-Dichloropropylene	ND	0.454	"								
Cyclohexane	ND	0.344	"								
Dibromochloromethane	ND	0.852	"								
Dichlorodifluoromethane	ND	0.495	"								
Ethyl acetate	ND	0.721	"								
Ethyl Benzene	ND	0.434	"								
Hexachlorobutadiene	ND	1.07	"								
Isopropanol	ND	1.47	"								
Methyl Methacrylate	ND	0.409	"								
Methyl tert-butyl ether (MTBE)	ND	0.361	"								
Methylene chloride	ND	2.08	"								
n-Heptane	ND	0.410	"								
n-Hexane	ND	0.352	"								

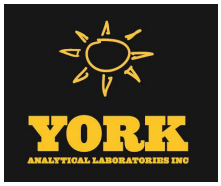

Volatile Organic Compounds in Air by GC/MS - Quality Control Data

York Analytical Laboratories, Inc. - Stratford

Analyte	Result	Reporting Limit	Units	Spike Level	Source* Result	%REC	%REC Limits	Flag	RPD	RPD Limit	Flag
Batch BL40699 - EPA TO15 PREP											
Blank (BL40699-BLK1) Blank									Prepared & Analyzed: 12/09/2024		
o-Xylene	ND	0.434	ug/m³								
p- & m- Xylenes	ND	0.868	"								
p-Ethyltoluene	ND	0.492	"								
Propylene	ND	0.172	"								
Styrene	ND	0.426	"								
Tetrachloroethylene	ND	0.678	"								
Tetrahydrofuran	ND	0.590	"								
Toluene	ND	0.377	"								
trans-1,2-Dichloroethylene	ND	0.396	"								
trans-1,3-Dichloropropylene	ND	0.454	"								
Trichloroethylene	ND	0.134	"								
Trichlorofluoromethane (Freon 11)	ND	0.562	"								
Vinyl acetate	ND	0.352	"								
Vinyl bromide	ND	0.437	"								
Vinyl Chloride	ND	0.128	"								
LCS (BL40699-BS1) LCS									Prepared & Analyzed: 12/09/2024		
1,1,1,2-Tetrachloroethane	10.8		ppbv	10.0		108	70-130				
1,1,1-Trichloroethane	10.9		"	10.0		109	70-130				
1,1,2,2-Tetrachloroethane	11.7		"	10.0		117	70-130				
1,1,2-Trichloro-1,2,2-trifluoroethane (Freon 113)	10.6		"	10.0		106	70-130				
1,1,2-Trichloroethane	11.2		"	10.0		112	70-130				
1,1-Dichloroethane	10.7		"	10.0		107	70-130				
1,1-Dichloroethylene	11.0		"	10.0		110	70-130				
1,2,4-Trichlorobenzene	10.1		"	10.0		101	70-130				
1,2,4-Trimethylbenzene	11.7		"	10.0		117	70-130				
1,2-Dibromoethane	11.4		"	10.0		114	70-130				
1,2-Dichlorobenzene	11.8		"	10.0		118	70-130				
1,2-Dichloroethane	11.1		"	10.0		111	70-130				
1,2-Dichloropropane	11.3		"	10.0		113	70-130				
1,2-Dichlorotetrafluoroethane	9.38		"	10.0		93.8	70-130				
1,3,5-Trimethylbenzene	11.7		"	10.0		117	70-130				
1,3-Butadiene	10.5		"	10.0		105	70-130				
1,3-Dichlorobenzene	12.0		"	10.0		120	70-130				
1,3-Dichloropropane	11.7		"	10.0		117	70-130				
1,4-Dichlorobenzene	11.8		"	10.0		118	70-130				
1,4-Dioxane	11.1		"	10.0		111	70-130				
2-Butanone	11.1		"	10.0		111	70-130				
2-Hexanone	11.1		"	10.0		111	70-130				
3-Chloropropene	10.6		"	10.0		106	70-130				
4-Methyl-2-pentanone	11.5		"	10.0		115	70-130				
Acetone	9.23		"	10.0		92.3	70-130				
Acrylonitrile	10.7		"	10.0		107	70-130				
Benzene	11.0		"	10.0		110	70-130				
Benzyl chloride	11.9		"	10.0		119	70-130				
Bromodichloromethane	10.1		"	10.0		101	70-130				
Bromoform	11.2		"	10.0		112	70-130				
Bromomethane	10.4		"	10.0		104	70-130				
Carbon disulfide	10.4		"	10.0		104	70-130				
Carbon tetrachloride	9.77		"	10.0		97.7	70-130				
Chlorobenzene	11.2		"	10.0		112	70-130				

Volatile Organic Compounds in Air by GC/MS - Quality Control Data

York Analytical Laboratories, Inc. - Stratford

Analyte	Result	Reporting Limit	Units	Spike Level	Source* Result	%REC	%REC Limits	Flag	RPD	RPD Limit	Flag
Batch BL40699 - EPA TO15 PREP											
LCS (BL40699-BS1) LCS								Prepared & Analyzed: 12/09/2024			
Chloroethane	10.8		ppbv	10.0		108	70-130				
Chloroform	10.8		"	10.0		108	70-130				
Chloromethane	10.1		"	10.0		101	70-130				
cis-1,2-Dichloroethylene	10.4		"	10.0		104	70-130				
cis-1,3-Dichloropropylene	11.4		"	10.0		114	70-130				
Cyclohexane	11.5		"	10.0		115	70-130				
Dibromochloromethane	11.0		"	10.0		110	70-130				
Dichlorodifluoromethane	10.6		"	10.0		106	70-130				
Ethyl acetate	13.1		"	10.0		131	70-130	High Bias			
Ethyl Benzene	11.4		"	10.0		114	70-130				
Hexachlorobutadiene	9.31		"	10.0		93.1	70-130				
Isopropanol	9.33		"	10.0		93.3	70-130				
Methyl Methacrylate	10.6		"	10.0		106	70-130				
Methyl tert-butyl ether (MTBE)	10.5		"	10.0		105	70-130				
Methylene chloride	11.0		"	10.0		110	70-130				
n-Heptane	11.1		"	10.0		111	70-130				
n-Hexane	10.9		"	10.0		109	70-130				
o-Xylene	11.2		"	10.0		112	70-130				
p- & m- Xylenes	22.7		"	20.0		113	70-130				
p-Ethyltoluene	12.0		"	10.0		120	70-130				
Propylene	10.6		"	10.0		106	70-130				
Styrene	11.4		"	10.0		114	70-130				
Tetrachloroethylene	10.9		"	10.0		109	70-130				
Tetrahydrofuran	11.0		"	10.0		110	70-130				
Toluene	10.8		"	10.0		108	70-130				
trans-1,2-Dichloroethylene	10.8		"	10.0		108	70-130				
trans-1,3-Dichloropropylene	11.4		"	10.0		114	70-130				
Trichloroethylene	11.0		"	10.0		110	70-130				
Trichlorofluoromethane (Freon 11)	10.5		"	10.0		105	70-130				
Vinyl acetate	5.40		"	10.0		54.0	70-130	Low Bias			
Vinyl bromide	11.0		"	10.0		110	70-130				
Vinyl Chloride	11.0		"	10.0		110	70-130				

Sample and Data Qualifiers Relating to This Work Order

TO-LCS-L	The result reported for this compound may be biased low due to its behavior in the analysis batch LCS where it recovered less 70% of the expected value.
TO-LCS-H	The result reported for this compound may be biased high due to its behavior in the analysis batch LCS where it recovered greater than 130% of the expected value.
TO-CCV	The value reported is ESTIMATED for this compound due to its behavior during continuing calibration verification (>30% Difference from initial calibration).
ICVE	The value reported is ESTIMATED. The value is estimated due to its behavior during initial calibration verification (recovery exceeded 30% of expected value).

Definitions and Other Explanations

*	Analyte is not certified or the state of the samples origination does not offer certification for the Analyte.
ND	NOT DETECTED - the analyte is not detected at the Reported to level (LOQ/RL or LOD/MDL)
RL	REPORTING LIMIT - the minimum reportable value based upon the lowest point in the analyte calibration curve.
LOQ	LIMIT OF QUANTITATION - the minimum concentration of a target analyte that can be reported within a specified degree of confidence. This is the lowest point in an analyte calibration curve that has been subjected to all steps of the processing/analysis and verified to meet defined criteria. This is based upon NELAC 2009 Standards and applies to all analyses.
LOD	LIMIT OF DETECTION - a verified estimate of the minimum concentration of a substance in a given matrix that an analytical process can reliably detect. This is based upon NELAC 2009 Standards and applies to all analyses conducted under the auspices of EPA SW-846.
MDL	METHOD DETECTION LIMIT - a statistically derived estimate of the minimum amount of a substance an analytical system can reliably detect with a 99% confidence that the concentration of the substance is greater than zero. This is based upon 40 CFR Part 136 Appendix B and applies only to EPA 600 and 200 series methods.
Reported to	This indicates that the data for a particular analysis is reported to either the LOD/MDL, or the LOQ/RL. In cases where the "Reported to" is located above the LOD/MDL, any value between this and the LOQ represents an estimated value which is "J" flagged accordingly. This applies to volatile and semi-volatile target compounds only.
NR	Not reported
RPD	Relative Percent Difference
Wet	The data has been reported on an as-received (wet weight) basis
Low Bias	Low Bias flag indicates that the recovery of the flagged analyte is below the laboratory or regulatory lower control limit. The data user should take note that this analyte may be biased low but should evaluate multiple lines of evidence including the LCS and site-specific MS/MSD data to draw bias conclusions. In cases where no site-specific MS/MSD was requested, only the LCS data can be used to evaluate such bias.
High Bias	High Bias flag indicates that the recovery of the flagged analyte is above the laboratory or regulatory upper control limit. The data user should take note that this analyte may be biased high but should evaluate multiple lines of evidence including the LCS and site-specific MS/MSD data to draw bias conclusions. In cases where no site-specific MS/MSD was requested, only the LCS data can be used to evaluate such bias.
Non-Dir.	Non-dir. flag (Non-Directional Bias) indicates that the Relative Percent Difference (RPD) (a measure of precision) among the MS and MSD data is outside the laboratory or regulatory control limit. This alerts the data user where the MS and MSD are from site-specific samples that the RPD is high due to either non-homogeneous distribution of target analyte between the MS/MSD or indicates poor reproducibility for other reasons.

If EPA SW-846 method 8270 is included herein it is noted that the target compound N-nitrosodiphenylamine (NDPA) decomposes in the gas chromatographic inlet and cannot be separated from diphenylamine (DPA). These results could actually represent 100% DPA, 100% NDPA or some combination of the two. For this reason, York reports the combined result for n-nitrosodiphenylamine and diphenylamine for either of these compounds as a combined concentration as Diphenylamine.

If Total PCBs are detected and the target aroclors reported are "Not detected", the Total PCB value is reported due to the presence of either or both Aroclors 1262 and 1268 which are non-target aroclors for some regulatory lists.

2-chloroethylvinyl ether readily breaks down under acidic conditions. Samples that are acid preserved, including standards will exhibit breakdown. The data user should take note.

Certification for pH is no longer offered by NYDOH ELAP.

Semi-Volatile and Volatile analyses are reported down to the LOD/MDL, with values between the LOD/MDL and the LOQ being "J" flagged as estimated results.

For analyses by EPA SW-846-8270D, the Limit of Quantitation (LOQ) reported for benzidine is based upon the lowest standard used for calibration and is not a verified LOQ due to this compound's propensity for oxidative losses during extraction/concentration procedures and non-reproducible chromatographic performance.

York Analytical Laboratories, Inc.
120 Research Drive, Stratford, CT 06615 | 132-02 89th Ave Queens, NY 11418
clientservices@yorklab.com | www.yorklab.com

Field Chain-of-Custody Record - AIR

NOTE: YORK's Standard Terms & Conditions are listed on the back side of this document. This document serves as your written authorization for YORK to proceed with the analyses requested below. Your signature binds you to YORK's Standard Terms & Conditions.

YORK Project No. 24K1863

YOUR Information	Report To:	Invoice To:
Company: LanganDPC	Company:	Company:
Address: 368 Ninth Avenue New York, NY 10001	Address:	Address:
Phone: 2124795400	Phone.:	Phone.:
Contact: Vinicius De Paula	Contact:	Contact:
E-mail: vdepaula@langan.com	E-mail:	E-mail:

YOUR Project Number: 170361307

YOUR Project Name: 514 Union Street

YOUR PO#:

Turn-Around Time

- RUSH - Next Day
- RUSH - Two Day
- RUSH - Three Day
- RUSH - Four Day
- Standard (5-7 Day) X

Please print clearly and legibly. All information must be complete. Samples will not be logged in and the turn-around-time clock will not begin until any questions by YORK are resolved.

Samples Collected by: (print your name above and sign below)

Caroline Devin

Air Matrix Codes

- AI - Indoor Ambient Air
- AO - Outdoor Amb. Air
- AE - Vapor Extraction Well/ Process Gas/Effluent
- AS - Soil Vapor/Sub-Slab

Samples From

- New York X
- New Jersey
- Connecticut
- Pennsylvania
- Other

Report / EDD Type (circle selections)

Summary Report	CT RCP	Standard Excel EDD
QA Report	CT RCP DQA/DUE	EQuIS (Standard)
NY ASP A Package	NJDEP Reduced Deliv.	NYSDEC EQuIS
NY ASP B Package	NJDKQP	NJDEP SRP HazSite
Other:		

YORK Reg. Comp.

Compared to the following Regulation(s): (please fill in)

Certified Canisters: Batch ___ Individual X

Please enter the following REQUIRED Field Data

Reporting Units: ug/m³ ___ ppbv ___ ppmv ___

Sample Identification	Date/Time Sampled	Air Matrix	Canister Vacuum Before Sampling (in Hg)	Canister Vacuum After Sampling (in Hg)	Canister ID	Flow Cont. ID	Analysis Requested
AA01-112624	11/26/24/0814	AO	-30	-10	37386	20442	[TO-15 VOCs]
IA01-112624	0815	AI	-30	-7	22080	17179	
IA02-112624	0816		-30	-6	49978	17988	
IA03-112624	0817		-29	-6	49582	20239	
IA04-112624	0817		-30	-9	16956	19392	

Comments: Please include: datamanagement@langan.com; mburke@langan.com; jahayes@langan.com; pmcmahon@langan.com; broontz@langan.com; cdevin@langan.com

Detection Limits Required

≤ 1 ug/m³ ___ NYSDEC V1 Limits ___

Routine Survey ___ Other ___

Sampling Media

- 6 Liter Canister X
- Tedlar Bag

Samples Relinquished by / Company	Date/Time	Samples Received by / Company	Date/Time	Samples Relinquished by / Company	Date/Time
Caroline Devin/Langan	11/26/24/900		11/26/24 900		11/26/24 16:48
Samples Received by / Company	Date/Time	Samples Relinquished by / Company	Date/Time	Samples Received by / Company	Date/Time
Samples Relinquished by / Company	Date/Time	Samples Received by / Company	Date/Time	Samples Received in LAB by	Date/Time
				11/26/24	16:48

Technical Report

prepared for:

Langan Engineering & Environmental Services (NYC)
21 Penn Plaza, 360 West 31st Street
New York NY, 10001
Attention: Vinicius DePaula

Report Date: 01/03/2025
Client Project ID: 170361307
York Project (SDG) No.: 24L1337

Report Date: 01/03/2025
Client Project ID: 170361307
York Project (SDG) No.: 24L1337

Langan Engineering & Environmental Services (NYC)
21 Penn Plaza, 360 West 31st Street
New York NY, 10001
Attention: Vinicius DePaula

Purpose and Results

This report contains the analytical data for the sample(s) identified on the attached chain-of-custody received in our laboratory on December 19, 2024 and listed below. The project was identified as your project: **170361307**.

The analyses were conducted utilizing appropriate EPA, Standard Methods, and ASTM methods as detailed in the data summary tables.

All samples were received in proper condition meeting the customary acceptance requirements for environmental samples except those indicated under the Sample and Analysis Qualifiers section of this report.

All analyses met the method and laboratory standard operating procedure requirements except as indicated by any data flags, the meaning of which are explained in the Sample and Data Qualifiers Relating to This Work Order section of this report and case narrative if applicable.

The results of the analyses, which are all reported on dry weight basis (soils) unless otherwise noted, are detailed in the following pages.

Please contact Client Services at 203.325.1371 with any questions regarding this report.

York Sample ID	Client Sample ID	Matrix	Date Collected	Date Received
24L1337-01	CAN 24108 / FC 20410	Air	12/18/2024	12/19/2024
24L1337-02	CAN 49982 / FC 20446	Air	12/18/2024	12/19/2024
24L1337-03	CAN 43000 / FC 19393	Air	12/18/2024	12/19/2024
24L1337-04	CAN 49574 / FC 21016	Air	12/18/2024	12/19/2024
24L1337-07	CAN 20754 / FC 20234	Air	12/18/2024	12/19/2024
24L1337-08	CAN 48292 / FC 21031	Air	12/18/2024	12/19/2024
24L1600-01	FD01_122324	Indoor Ambient Air	12/23/2024	12/23/2024
24L1600-02	FD02_122324	Indoor Ambient Air	12/23/2024	12/23/2024
24L1600-03	FD03_122324	Indoor Ambient Air	12/23/2024	12/23/2024
24L1600-04	FD04_122324	Indoor Ambient Air	12/23/2024	12/23/2024
24L1600-05	FD05_122324	Indoor Ambient Air	12/23/2024	12/23/2024
24L1600-06	EA01_122324	Vapor Extraction	12/23/2024	12/23/2024

General Notes for York Project (SDG) No.: 24L1337

1. The RLs and MDLs (Reporting Limit and Method Detection Limit respectively) reported are adjusted for any dilution necessary due to the levels of target and/or non-target analytes and matrix interference. The RL(REPORTING LIMIT) is based upon the lowest standard utilized for the calibration where applicable.
2. Samples are retained for a period of thirty days after submittal of report, unless other arrangements are made.
3. York's liability for the above data is limited to the dollar value paid to York for the referenced project.
4. This report shall not be reproduced without the written approval of York Analytical Laboratories, Inc.
5. All analyses conducted met method or Laboratory SOP requirements. See the Sample and Data Qualifiers Section for further information.
6. It is noted that no analyses reported herein were subcontracted to another laboratory, unless noted in the report.
7. This report reflects results that relate only to the samples submitted on the attached chain-of-custody form(s) received by York.
8. Analyses conducted at York Analytical Laboratories, Inc. Stratford, CT are indicated by NY Cert. No. 10854; those conducted at York Analytical Laboratories, Inc., Richmond Hill, NY are indicated by NY Cert. No. 12058.

Approved By  **Date:** 01/03/2025

Cassie L. Mosher
Laboratory Manager

Sample Information

Client Sample ID: CAN 24108 / FC 20410 **York Sample ID:** 24L1337-01

York Project (SDG) No.	Client Project ID	Matrix	Collection Date/Time	Date Received
24L1337	170361307	Air	December 18, 2024 3:00 pm	12/19/2024

VOA, TO15 MASTER

Log-in Notes:

Sample Notes:

Sample Prepared by Method: EPA TO15 PREP

CAS No.	Parameter	Result	Flag	Units	Reported to LOQ	Dilution	Reference Method	Date/Time Prepared	Date/Time Analyzed	Analyst
630-20-6	* 1,1,1,2-Tetrachloroethane	ND		ug/m³	0.687	1	EPA TO-15	12/18/2024 09:00	12/18/2024 13:31	YR
							Certifications:			
71-55-6	1,1,1-Trichloroethane	ND		ug/m³	0.546	1	EPA TO-15	12/18/2024 09:00	12/18/2024 13:31	YR
							Certifications:	NELAC-NY12058,NJDEP-NY037		
79-34-5	1,1,2,2-Tetrachloroethane	ND		ug/m³	0.687	1	EPA TO-15	12/18/2024 09:00	12/18/2024 13:31	YR
							Certifications:	NELAC-NY12058,NJDEP-NY037		
76-13-1	1,1,2-Trichloro-1,2,2-trifluoroethane (Freon 113)	ND		ug/m³	0.766	1	EPA TO-15	12/18/2024 09:00	12/18/2024 13:31	YR
							Certifications:	NELAC-NY12058,NJDEP-NY037		
79-00-5	1,1,2-Trichloroethane	ND		ug/m³	0.546	1	EPA TO-15	12/18/2024 09:00	12/18/2024 13:31	YR
							Certifications:	NELAC-NY12058,NJDEP-NY037		
75-34-3	1,1-Dichloroethane	ND		ug/m³	0.405	1	EPA TO-15	12/18/2024 09:00	12/18/2024 13:31	YR
							Certifications:	NELAC-NY12058,NJDEP-NY037		
75-35-4	1,1-Dichloroethylene	ND		ug/m³	0.198	1	EPA TO-15	12/18/2024 09:00	12/18/2024 13:31	YR
							Certifications:	NELAC-NY12058,NJDEP-NY037		
120-82-1	1,2,4-Trichlorobenzene	ND		ug/m³	0.742	1	EPA TO-15	12/18/2024 09:00	12/18/2024 13:31	YR
							Certifications:	NELAC-NY12058,NJDEP-NY037		
95-63-6	1,2,4-Trimethylbenzene	ND		ug/m³	0.492	1	EPA TO-15	12/18/2024 09:00	12/18/2024 13:31	YR
							Certifications:	NELAC-NY12058,NJDEP-NY037		
106-93-4	1,2-Dibromoethane	ND		ug/m³	0.768	1	EPA TO-15	12/18/2024 09:00	12/18/2024 13:31	YR
							Certifications:	NELAC-NY12058,NJDEP-NY037		
95-50-1	1,2-Dichlorobenzene	ND		ug/m³	0.601	1	EPA TO-15	12/18/2024 09:00	12/18/2024 13:31	YR
							Certifications:	NELAC-NY12058,NJDEP-NY037		
107-06-2	1,2-Dichloroethane	ND		ug/m³	0.405	1	EPA TO-15	12/18/2024 09:00	12/18/2024 13:31	YR
							Certifications:	NELAC-NY12058,NJDEP-NY037		
78-87-5	1,2-Dichloropropane	ND		ug/m³	0.462	1	EPA TO-15	12/18/2024 09:00	12/18/2024 13:31	YR
							Certifications:	NELAC-NY12058,NJDEP-NY037		
76-14-2	1,2-Dichlorotetrafluoroethane	ND		ug/m³	0.699	1	EPA TO-15	12/18/2024 09:00	12/18/2024 13:31	YR
							Certifications:	NELAC-NY12058,NJDEP-NY037		
108-67-8	1,3,5-Trimethylbenzene	ND		ug/m³	0.492	1	EPA TO-15	12/18/2024 09:00	12/18/2024 13:31	YR
							Certifications:	NELAC-NY12058,NJDEP-NY037		
106-99-0	1,3-Butadiene	ND		ug/m³	0.664	1	EPA TO-15	12/18/2024 09:00	12/18/2024 13:31	YR
							Certifications:	NELAC-NY12058,NJDEP-NY037		
541-73-1	1,3-Dichlorobenzene	ND		ug/m³	0.601	1	EPA TO-15	12/18/2024 09:00	12/18/2024 13:31	YR
							Certifications:	NELAC-NY12058,NJDEP-NY037		
142-28-9	* 1,3-Dichloropropane	ND		ug/m³	0.462	1	EPA TO-15	12/18/2024 09:00	12/18/2024 13:31	YR
							Certifications:			
106-46-7	1,4-Dichlorobenzene	ND		ug/m³	0.601	1	EPA TO-15	12/18/2024 09:00	12/18/2024 13:31	YR
							Certifications:	NELAC-NY12058,NJDEP-NY037		
123-91-1	1,4-Dioxane	ND		ug/m³	0.721	1	EPA TO-15	12/18/2024 09:00	12/18/2024 13:31	YR
							Certifications:	NELAC-NY12058,NJDEP-NY037		
540-84-1	* 2,2,4-Trimethylpentane	ND		ug/m³	0.234	1	EPA TO-15	12/18/2024 09:00	12/18/2024 13:31	YR
							Certifications:			

Sample Information

Client Sample ID: CAN 24108 / FC 20410 **York Sample ID:** 24L1337-01

York Project (SDG) No.	Client Project ID	Matrix	Collection Date/Time	Date Received
24L1337	170361307	Air	December 18, 2024 3:00 pm	12/19/2024

VOA, TO15 MASTER

Log-in Notes:

Sample Notes:

Sample Prepared by Method: EPA TO15 PREP

CAS No.	Parameter	Result	Flag	Units	Reported to LOQ	Dilution	Reference Method	Date/Time Prepared	Date/Time Analyzed	Analyst
78-93-3	2-Butanone	ND		ug/m³	0.295	1	EPA TO-15	12/18/2024 09:00	12/18/2024 13:31	YR
							Certifications: NELAC-NY12058,NJDEP-NY037			
591-78-6	* 2-Hexanone	ND		ug/m³	0.819	1	EPA TO-15	12/18/2024 09:00	12/18/2024 13:31	YR
							Certifications:			
107-05-1	3-Chloropropene	ND		ug/m³	1.57	1	EPA TO-15	12/18/2024 09:00	12/18/2024 13:31	YR
							Certifications: NELAC-NY12058,NJDEP-NY037			
108-10-1	4-Methyl-2-pentanone	ND		ug/m³	0.410	1	EPA TO-15	12/18/2024 09:00	12/18/2024 13:31	YR
							Certifications: NELAC-NY12058,NJDEP-NY037			
67-64-1	Acetone	ND		ug/m³	1.90	1	EPA TO-15	12/18/2024 09:00	12/18/2024 13:31	YR
							Certifications: NELAC-NY12058,NJDEP-NY037			
107-13-1	Acrylonitrile	ND		ug/m³	2.82	1	EPA TO-15	12/18/2024 09:00	12/18/2024 13:31	YR
							Certifications: NELAC-NY12058,NJDEP-NY037			
71-43-2	Benzene	ND		ug/m³	0.319	1	EPA TO-15	12/18/2024 09:00	12/18/2024 13:31	YR
							Certifications: NELAC-NY12058,NJDEP-NY037			
100-44-7	Benzyl chloride	ND		ug/m³	0.518	1	EPA TO-15	12/18/2024 09:00	12/18/2024 13:31	YR
							Certifications: NELAC-NY12058,NJDEP-NY037			
75-27-4	Bromodichloromethane	ND		ug/m³	0.670	1	EPA TO-15	12/18/2024 09:00	12/18/2024 13:31	YR
							Certifications: NELAC-NY12058,NJDEP-NY037			
75-25-2	Bromoform	ND		ug/m³	1.03	1	EPA TO-15	12/18/2024 09:00	12/18/2024 13:31	YR
							Certifications: NELAC-NY12058,NJDEP-NY037			
74-83-9	Bromomethane	ND		ug/m³	0.388	1	EPA TO-15	12/18/2024 09:00	12/18/2024 13:31	YR
							Certifications: NELAC-NY12058,NJDEP-NY037			
75-15-0	Carbon disulfide	ND		ug/m³	0.311	1	EPA TO-15	12/18/2024 09:00	12/18/2024 13:31	YR
							Certifications: NELAC-NY12058,NJDEP-NY037			
56-23-5	Carbon tetrachloride	ND		ug/m³	0.157	1	EPA TO-15	12/18/2024 09:00	12/18/2024 13:31	YR
							Certifications: NELAC-NY12058,NJDEP-NY037			
108-90-7	Chlorobenzene	ND		ug/m³	0.460	1	EPA TO-15	12/18/2024 09:00	12/18/2024 13:31	YR
							Certifications: NELAC-NY12058,NJDEP-NY037			
75-00-3	Chloroethane	ND		ug/m³	0.264	1	EPA TO-15	12/18/2024 09:00	12/18/2024 13:31	YR
							Certifications: NELAC-NY12058,NJDEP-NY037			
67-66-3	Chloroform	ND		ug/m³	0.488	1	EPA TO-15	12/18/2024 09:00	12/18/2024 13:31	YR
							Certifications: NELAC-NY12058,NJDEP-NY037			
74-87-3	Chloromethane	ND		ug/m³	0.207	1	EPA TO-15	12/18/2024 09:00	12/18/2024 13:31	YR
							Certifications: NELAC-NY12058,NJDEP-NY037			
156-59-2	cis-1,2-Dichloroethylene	ND		ug/m³	0.198	1	EPA TO-15	12/18/2024 09:00	12/18/2024 13:31	YR
							Certifications: NELAC-NY12058,NJDEP-NY037			
10061-01-5	cis-1,3-Dichloropropylene	ND		ug/m³	0.454	1	EPA TO-15	12/18/2024 09:00	12/18/2024 13:31	YR
							Certifications: NELAC-NY12058,NJDEP-NY037			
110-82-7	Cyclohexane	ND		ug/m³	0.344	1	EPA TO-15	12/18/2024 09:00	12/18/2024 13:31	YR
							Certifications: NELAC-NY12058,NJDEP-NY037			
124-48-1	Dibromochloromethane	ND		ug/m³	0.852	1	EPA TO-15	12/18/2024 09:00	12/18/2024 13:31	YR
							Certifications: NELAC-NY12058,NJDEP-NY037			
75-71-8	Dichlorodifluoromethane	ND		ug/m³	0.495	1	EPA TO-15	12/18/2024 09:00	12/18/2024 13:31	YR
							Certifications: NELAC-NY12058,NJDEP-NY037			

Sample Information

Client Sample ID: CAN 24108 / FC 20410 **York Sample ID:** 24L1337-01

York Project (SDG) No.	Client Project ID	Matrix	Collection Date/Time	Date Received
24L1337	170361307	Air	December 18, 2024 3:00 pm	12/19/2024

VOA, TO15 MASTER

Log-in Notes:

Sample Notes:

Sample Prepared by Method: EPA TO15 PREP

CAS No.	Parameter	Result	Flag	Units	Reported to LOQ	Dilution	Reference Method	Date/Time Prepared	Date/Time Analyzed	Analyst
141-78-6	* Ethyl acetate	ND		ug/m³	0.721	1	EPA TO-15	12/18/2024 09:00	12/18/2024 13:31	YR
							Certifications:			
100-41-4	Ethyl Benzene	ND		ug/m³	0.434	1	EPA TO-15	12/18/2024 09:00	12/18/2024 13:31	YR
							Certifications:	NELAC-NY12058,NJDEP-NY037		
87-68-3	Hexachlorobutadiene	ND		ug/m³	1.07	1	EPA TO-15	12/18/2024 09:00	12/18/2024 13:31	YR
							Certifications:	NELAC-NY12058,NJDEP-NY037		
67-63-0	Isopropanol	ND		ug/m³	1.47	1	EPA TO-15	12/18/2024 09:00	12/18/2024 13:31	YR
							Certifications:	NELAC-NY12058,NJDEP-NY037		
80-62-6	Methyl Methacrylate	ND		ug/m³	0.409	1	EPA TO-15	12/18/2024 09:00	12/18/2024 13:31	YR
							Certifications:	NELAC-NY12058,NJDEP-NY037		
1634-04-4	Methyl tert-butyl ether (MTBE)	ND		ug/m³	0.361	1	EPA TO-15	12/18/2024 09:00	12/18/2024 13:31	YR
							Certifications:	NELAC-NY12058,NJDEP-NY037		
75-09-2	Methylene chloride	ND		ug/m³	2.08	1	EPA TO-15	12/18/2024 09:00	12/18/2024 13:31	YR
							Certifications:	NELAC-NY12058,NJDEP-NY037		
91-20-3	* Naphthalene	ND		ug/m³	1.05	1	EPA TO-15	12/18/2024 09:00	12/18/2024 13:31	YR
							Certifications:	NJDEP-NY037		
142-82-5	n-Heptane	ND		ug/m³	0.410	1	EPA TO-15	12/18/2024 09:00	12/18/2024 13:31	YR
							Certifications:	NELAC-NY12058,NJDEP-NY037		
110-54-3	n-Hexane	ND		ug/m³	0.352	1	EPA TO-15	12/18/2024 09:00	12/18/2024 13:31	YR
							Certifications:	NELAC-NY12058,NJDEP-NY037		
95-47-6	o-Xylene	ND		ug/m³	0.434	1	EPA TO-15	12/18/2024 09:00	12/18/2024 13:31	YR
							Certifications:	NELAC-NY12058,NJDEP-NY037		
179601-23-1	p- & m- Xylenes	ND		ug/m³	0.868	1	EPA TO-15	12/18/2024 09:00	12/18/2024 13:31	YR
							Certifications:	NELAC-NY12058,NJDEP-NY037		
622-96-8	* p-Ethyltoluene	ND		ug/m³	0.492	1	EPA TO-15	12/18/2024 09:00	12/18/2024 13:31	YR
							Certifications:			
115-07-1	* Propylene	ND		ug/m³	0.172	1	EPA TO-15	12/18/2024 09:00	12/18/2024 13:31	YR
							Certifications:			
100-42-5	Styrene	ND		ug/m³	0.426	1	EPA TO-15	12/18/2024 09:00	12/18/2024 13:31	YR
							Certifications:	NELAC-NY12058,NJDEP-NY037		
127-18-4	Tetrachloroethylene	ND		ug/m³	0.678	1	EPA TO-15	12/18/2024 09:00	12/18/2024 13:31	YR
							Certifications:	NELAC-NY12058,NJDEP-NY037		
109-99-9	* Tetrahydrofuran	ND		ug/m³	0.590	1	EPA TO-15	12/18/2024 09:00	12/18/2024 13:31	YR
							Certifications:			
108-88-3	Toluene	ND		ug/m³	0.377	1	EPA TO-15	12/18/2024 09:00	12/18/2024 13:31	YR
							Certifications:	NELAC-NY12058,NJDEP-NY037		
156-60-5	trans-1,2-Dichloroethylene	ND		ug/m³	0.396	1	EPA TO-15	12/18/2024 09:00	12/18/2024 13:31	YR
							Certifications:	NELAC-NY12058,NJDEP-NY037		
10061-02-6	trans-1,3-Dichloropropylene	ND		ug/m³	0.454	1	EPA TO-15	12/18/2024 09:00	12/18/2024 13:31	YR
							Certifications:	NELAC-NY12058,NJDEP-NY037		
79-01-6	Trichloroethylene	ND		ug/m³	0.134	1	EPA TO-15	12/18/2024 09:00	12/18/2024 13:31	YR
							Certifications:	NELAC-NY12058,NJDEP-NY037		
75-69-4	Trichlorofluoromethane (Freon 11)	ND		ug/m³	0.562	1	EPA TO-15	12/18/2024 09:00	12/18/2024 13:31	YR
							Certifications:	NELAC-NY12058,NJDEP-NY037		

Sample Information

Client Sample ID: CAN 24108 / FC 20410 **York Sample ID:** 24L1337-01

York Project (SDG) No.	Client Project ID	Matrix	Collection Date/Time	Date Received
24L1337	170361307	Air	December 18, 2024 3:00 pm	12/19/2024

VOA, TO15 MASTER

Log-in Notes:

Sample Notes:

Sample Prepared by Method: EPA TO15 PREP

CAS No.	Parameter	Result	Flag	Units	Reported to LOQ	Dilution	Reference Method	Date/Time Prepared	Date/Time Analyzed	Analyst
108-05-4	Vinyl acetate	ND		ug/m³	0.352	1	EPA TO-15	12/18/2024 09:00	12/18/2024 13:31	YR
							Certifications:	NELAC-NY12058,NJDEP-NY037		
593-60-2	Vinyl bromide	ND		ug/m³	0.437	1	EPA TO-15	12/18/2024 09:00	12/18/2024 13:31	YR
							Certifications:	NELAC-NY12058,NJDEP-NY037		
75-01-4	Vinyl Chloride	ND		ug/m³	0.128	1	EPA TO-15	12/18/2024 09:00	12/18/2024 13:31	YR
							Certifications:	NELAC-NY12058,NJDEP-NY037		

Sample Information

Client Sample ID: CAN 49982 / FC 20446 **York Sample ID:** 24L1337-02

York Project (SDG) No.	Client Project ID	Matrix	Collection Date/Time	Date Received
24L1337	170361307	Air	December 18, 2024 3:00 pm	12/19/2024

VOA, TO15 MASTER **Log-in Notes:** **Sample Notes:**

Sample Prepared by Method: EPA TO15 PREP

CAS No.	Parameter	Result	Flag	Units	Reported to LOQ	Dilution	Reference Method	Date/Time Prepared	Date/Time Analyzed	Analyst
630-20-6	* 1,1,1,2-Tetrachloroethane	ND		ug/m³	0.687	1	EPA TO-15	12/17/2024 08:00	12/17/2024 17:55	YR
							Certifications:			
71-55-6	1,1,1-Trichloroethane	ND		ug/m³	0.546	1	EPA TO-15	12/17/2024 08:00	12/17/2024 17:55	YR
							Certifications:	NELAC-NY12058,NJDEP-NY037		
79-34-5	1,1,2,2-Tetrachloroethane	ND		ug/m³	0.687	1	EPA TO-15	12/17/2024 08:00	12/17/2024 17:55	YR
							Certifications:	NELAC-NY12058,NJDEP-NY037		
76-13-1	1,1,2-Trichloro-1,2,2-trifluoroethane (Freon 113)	ND		ug/m³	0.766	1	EPA TO-15	12/17/2024 08:00	12/17/2024 17:55	YR
							Certifications:	NELAC-NY12058,NJDEP-NY037		
79-00-5	1,1,2-Trichloroethane	ND		ug/m³	0.546	1	EPA TO-15	12/17/2024 08:00	12/17/2024 17:55	YR
							Certifications:	NELAC-NY12058,NJDEP-NY037		
75-34-3	1,1-Dichloroethane	ND		ug/m³	0.405	1	EPA TO-15	12/17/2024 08:00	12/17/2024 17:55	YR
							Certifications:	NELAC-NY12058,NJDEP-NY037		
75-35-4	1,1-Dichloroethylene	ND		ug/m³	0.198	1	EPA TO-15	12/17/2024 08:00	12/17/2024 17:55	YR
							Certifications:	NELAC-NY12058,NJDEP-NY037		
120-82-1	1,2,4-Trichlorobenzene	ND		ug/m³	0.742	1	EPA TO-15	12/17/2024 08:00	12/17/2024 17:55	YR
							Certifications:	NELAC-NY12058,NJDEP-NY037		
95-63-6	1,2,4-Trimethylbenzene	ND		ug/m³	0.492	1	EPA TO-15	12/17/2024 08:00	12/17/2024 17:55	YR
							Certifications:	NELAC-NY12058,NJDEP-NY037		
106-93-4	1,2-Dibromoethane	ND		ug/m³	0.768	1	EPA TO-15	12/17/2024 08:00	12/17/2024 17:55	YR
							Certifications:	NELAC-NY12058,NJDEP-NY037		
95-50-1	1,2-Dichlorobenzene	ND		ug/m³	0.601	1	EPA TO-15	12/17/2024 08:00	12/17/2024 17:55	YR
							Certifications:	NELAC-NY12058,NJDEP-NY037		
107-06-2	1,2-Dichloroethane	ND		ug/m³	0.405	1	EPA TO-15	12/17/2024 08:00	12/17/2024 17:55	YR
							Certifications:	NELAC-NY12058,NJDEP-NY037		
78-87-5	1,2-Dichloropropane	ND		ug/m³	0.462	1	EPA TO-15	12/17/2024 08:00	12/17/2024 17:55	YR
							Certifications:	NELAC-NY12058,NJDEP-NY037		
76-14-2	1,2-Dichlorotetrafluoroethane	ND		ug/m³	0.699	1	EPA TO-15	12/17/2024 08:00	12/17/2024 17:55	YR
							Certifications:	NELAC-NY12058,NJDEP-NY037		
108-67-8	1,3,5-Trimethylbenzene	ND		ug/m³	0.492	1	EPA TO-15	12/17/2024 08:00	12/17/2024 17:55	YR
							Certifications:	NELAC-NY12058,NJDEP-NY037		
106-99-0	1,3-Butadiene	ND		ug/m³	0.664	1	EPA TO-15	12/17/2024 08:00	12/17/2024 17:55	YR
							Certifications:	NELAC-NY12058,NJDEP-NY037		
541-73-1	1,3-Dichlorobenzene	ND		ug/m³	0.601	1	EPA TO-15	12/17/2024 08:00	12/17/2024 17:55	YR
							Certifications:	NELAC-NY12058,NJDEP-NY037		
142-28-9	* 1,3-Dichloropropane	ND		ug/m³	0.462	1	EPA TO-15	12/17/2024 08:00	12/17/2024 17:55	YR
							Certifications:			
106-46-7	1,4-Dichlorobenzene	ND		ug/m³	0.601	1	EPA TO-15	12/17/2024 08:00	12/17/2024 17:55	YR
							Certifications:	NELAC-NY12058,NJDEP-NY037		
123-91-1	1,4-Dioxane	ND		ug/m³	0.721	1	EPA TO-15	12/17/2024 08:00	12/17/2024 17:55	YR
							Certifications:	NELAC-NY12058,NJDEP-NY037		
540-84-1	* 2,2,4-Trimethylpentane	ND		ug/m³	0.234	1	EPA TO-15	12/17/2024 08:00	12/17/2024 17:55	YR
							Certifications:			
78-93-3	2-Butanone	ND		ug/m³	0.295	1	EPA TO-15	12/17/2024 08:00	12/17/2024 17:55	YR
							Certifications:	NELAC-NY12058,NJDEP-NY037		

Sample Information

Client Sample ID: CAN 49982 / FC 20446 **York Sample ID:** 24L1337-02

York Project (SDG) No.	Client Project ID	Matrix	Collection Date/Time	Date Received
24L1337	170361307	Air	December 18, 2024 3:00 pm	12/19/2024

VOA, TO15 MASTER **Log-in Notes:** **Sample Notes:**

Sample Prepared by Method: EPA TO15 PREP

CAS No.	Parameter	Result	Flag	Units	Reported to LOQ	Dilution	Reference Method	Date/Time Prepared	Date/Time Analyzed	Analyst
591-78-6	* 2-Hexanone	ND		ug/m³	0.819	1	EPA TO-15	12/17/2024 08:00	12/17/2024 17:55	YR
							Certifications:			
107-05-1	3-Chloropropene	ND		ug/m³	1.57	1	EPA TO-15	12/17/2024 08:00	12/17/2024 17:55	YR
							Certifications:	NELAC-NY12058,NJDEP-NY037		
108-10-1	4-Methyl-2-pentanone	ND		ug/m³	0.410	1	EPA TO-15	12/17/2024 08:00	12/17/2024 17:55	YR
							Certifications:	NELAC-NY12058,NJDEP-NY037		
67-64-1	Acetone	ND		ug/m³	1.90	1	EPA TO-15	12/17/2024 08:00	12/17/2024 17:55	YR
							Certifications:	NELAC-NY12058,NJDEP-NY037		
107-13-1	Acrylonitrile	ND		ug/m³	2.82	1	EPA TO-15	12/17/2024 08:00	12/17/2024 17:55	YR
							Certifications:	NELAC-NY12058,NJDEP-NY037		
71-43-2	Benzene	ND		ug/m³	0.319	1	EPA TO-15	12/17/2024 08:00	12/17/2024 17:55	YR
							Certifications:	NELAC-NY12058,NJDEP-NY037		
100-44-7	Benzyl chloride	ND		ug/m³	0.518	1	EPA TO-15	12/17/2024 08:00	12/17/2024 17:55	YR
							Certifications:	NELAC-NY12058,NJDEP-NY037		
75-27-4	Bromodichloromethane	ND		ug/m³	0.670	1	EPA TO-15	12/17/2024 08:00	12/17/2024 17:55	YR
							Certifications:	NELAC-NY12058,NJDEP-NY037		
75-25-2	Bromoform	ND		ug/m³	1.03	1	EPA TO-15	12/17/2024 08:00	12/17/2024 17:55	YR
							Certifications:	NELAC-NY12058,NJDEP-NY037		
74-83-9	Bromomethane	ND		ug/m³	0.388	1	EPA TO-15	12/17/2024 08:00	12/17/2024 17:55	YR
							Certifications:	NELAC-NY12058,NJDEP-NY037		
75-15-0	Carbon disulfide	ND		ug/m³	0.311	1	EPA TO-15	12/17/2024 08:00	12/17/2024 17:55	YR
							Certifications:	NELAC-NY12058,NJDEP-NY037		
56-23-5	Carbon tetrachloride	ND		ug/m³	0.157	1	EPA TO-15	12/17/2024 08:00	12/17/2024 17:55	YR
							Certifications:	NELAC-NY12058,NJDEP-NY037		
108-90-7	Chlorobenzene	ND		ug/m³	0.460	1	EPA TO-15	12/17/2024 08:00	12/17/2024 17:55	YR
							Certifications:	NELAC-NY12058,NJDEP-NY037		
75-00-3	Chloroethane	ND		ug/m³	0.264	1	EPA TO-15	12/17/2024 08:00	12/17/2024 17:55	YR
							Certifications:	NELAC-NY12058,NJDEP-NY037		
67-66-3	Chloroform	ND		ug/m³	0.488	1	EPA TO-15	12/17/2024 08:00	12/17/2024 17:55	YR
							Certifications:	NELAC-NY12058,NJDEP-NY037		
74-87-3	Chloromethane	ND		ug/m³	0.207	1	EPA TO-15	12/17/2024 08:00	12/17/2024 17:55	YR
							Certifications:	NELAC-NY12058,NJDEP-NY037		
156-59-2	cis-1,2-Dichloroethylene	ND		ug/m³	0.198	1	EPA TO-15	12/17/2024 08:00	12/17/2024 17:55	YR
							Certifications:	NELAC-NY12058,NJDEP-NY037		
10061-01-5	cis-1,3-Dichloropropylene	ND		ug/m³	0.454	1	EPA TO-15	12/17/2024 08:00	12/17/2024 17:55	YR
							Certifications:	NELAC-NY12058,NJDEP-NY037		
110-82-7	Cyclohexane	ND		ug/m³	0.344	1	EPA TO-15	12/17/2024 08:00	12/17/2024 17:55	YR
							Certifications:	NELAC-NY12058,NJDEP-NY037		
124-48-1	Dibromochloromethane	ND		ug/m³	0.852	1	EPA TO-15	12/17/2024 08:00	12/17/2024 17:55	YR
							Certifications:	NELAC-NY12058,NJDEP-NY037		
75-71-8	Dichlorodifluoromethane	ND		ug/m³	0.495	1	EPA TO-15	12/17/2024 08:00	12/17/2024 17:55	YR
							Certifications:	NELAC-NY12058,NJDEP-NY037		
141-78-6	* Ethyl acetate	ND		ug/m³	0.721	1	EPA TO-15	12/17/2024 08:00	12/17/2024 17:55	YR
							Certifications:			

Sample Information

Client Sample ID: CAN 49982 / FC 20446 **York Sample ID:** 24L1337-02

York Project (SDG) No.	Client Project ID	Matrix	Collection Date/Time	Date Received
24L1337	170361307	Air	December 18, 2024 3:00 pm	12/19/2024

VOA, TO15 MASTER **Log-in Notes:** **Sample Notes:**

Sample Prepared by Method: EPA TO15 PREP

CAS No.	Parameter	Result	Flag	Units	Reported to LOQ	Dilution	Reference Method	Date/Time Prepared	Date/Time Analyzed	Analyst
100-41-4	Ethyl Benzene	ND		ug/m³	0.434	1	EPA TO-15	12/17/2024 08:00	12/17/2024 17:55	YR
							Certifications:	NELAC-NY12058,NJDEP-NY037		
87-68-3	Hexachlorobutadiene	ND		ug/m³	1.07	1	EPA TO-15	12/17/2024 08:00	12/17/2024 17:55	YR
							Certifications:	NELAC-NY12058,NJDEP-NY037		
67-63-0	Isopropanol	ND		ug/m³	1.47	1	EPA TO-15	12/17/2024 08:00	12/17/2024 17:55	YR
							Certifications:	NELAC-NY12058,NJDEP-NY037		
80-62-6	Methyl Methacrylate	ND		ug/m³	0.409	1	EPA TO-15	12/17/2024 08:00	12/17/2024 17:55	YR
							Certifications:	NELAC-NY12058,NJDEP-NY037		
1634-04-4	Methyl tert-butyl ether (MTBE)	ND		ug/m³	0.361	1	EPA TO-15	12/17/2024 08:00	12/17/2024 17:55	YR
							Certifications:	NELAC-NY12058,NJDEP-NY037		
75-09-2	Methylene chloride	ND		ug/m³	2.08	1	EPA TO-15	12/17/2024 08:00	12/17/2024 17:55	YR
							Certifications:	NELAC-NY12058,NJDEP-NY037		
91-20-3	* Naphthalene	ND		ug/m³	1.05	1	EPA TO-15	12/17/2024 08:00	12/17/2024 17:55	YR
							Certifications:	NJDEP-NY037		
142-82-5	n-Heptane	ND		ug/m³	0.410	1	EPA TO-15	12/17/2024 08:00	12/17/2024 17:55	YR
							Certifications:	NELAC-NY12058,NJDEP-NY037		
110-54-3	n-Hexane	ND		ug/m³	0.352	1	EPA TO-15	12/17/2024 08:00	12/17/2024 17:55	YR
							Certifications:	NELAC-NY12058,NJDEP-NY037		
95-47-6	o-Xylene	ND		ug/m³	0.434	1	EPA TO-15	12/17/2024 08:00	12/17/2024 17:55	YR
							Certifications:	NELAC-NY12058,NJDEP-NY037		
179601-23-1	p- & m- Xylenes	ND		ug/m³	0.868	1	EPA TO-15	12/17/2024 08:00	12/17/2024 17:55	YR
							Certifications:	NELAC-NY12058,NJDEP-NY037		
622-96-8	* p-Ethyltoluene	ND		ug/m³	0.492	1	EPA TO-15	12/17/2024 08:00	12/17/2024 17:55	YR
							Certifications:			
115-07-1	* Propylene	ND		ug/m³	0.172	1	EPA TO-15	12/17/2024 08:00	12/17/2024 17:55	YR
							Certifications:			
100-42-5	Styrene	ND		ug/m³	0.426	1	EPA TO-15	12/17/2024 08:00	12/17/2024 17:55	YR
							Certifications:	NELAC-NY12058,NJDEP-NY037		
127-18-4	Tetrachloroethylene	ND		ug/m³	0.678	1	EPA TO-15	12/17/2024 08:00	12/17/2024 17:55	YR
							Certifications:	NELAC-NY12058,NJDEP-NY037		
109-99-9	* Tetrahydrofuran	ND		ug/m³	0.590	1	EPA TO-15	12/17/2024 08:00	12/17/2024 17:55	YR
							Certifications:			
108-88-3	Toluene	ND		ug/m³	0.377	1	EPA TO-15	12/17/2024 08:00	12/17/2024 17:55	YR
							Certifications:	NELAC-NY12058,NJDEP-NY037		
156-60-5	trans-1,2-Dichloroethylene	ND		ug/m³	0.396	1	EPA TO-15	12/17/2024 08:00	12/17/2024 17:55	YR
							Certifications:	NELAC-NY12058,NJDEP-NY037		
10061-02-6	trans-1,3-Dichloropropylene	ND		ug/m³	0.454	1	EPA TO-15	12/17/2024 08:00	12/17/2024 17:55	YR
							Certifications:	NELAC-NY12058,NJDEP-NY037		
79-01-6	Trichloroethylene	ND		ug/m³	0.134	1	EPA TO-15	12/17/2024 08:00	12/17/2024 17:55	YR
							Certifications:	NELAC-NY12058,NJDEP-NY037		
75-69-4	Trichlorofluoromethane (Freon 11)	ND		ug/m³	0.562	1	EPA TO-15	12/17/2024 08:00	12/17/2024 17:55	YR
							Certifications:	NELAC-NY12058,NJDEP-NY037		
108-05-4	Vinyl acetate	ND		ug/m³	0.352	1	EPA TO-15	12/17/2024 08:00	12/17/2024 17:55	YR
							Certifications:	NELAC-NY12058,NJDEP-NY037		

Sample Information

Client Sample ID: CAN 49982 / FC 20446 **York Sample ID:** 24L1337-02

York Project (SDG) No.	Client Project ID	Matrix	Collection Date/Time	Date Received
24L1337	170361307	Air	December 18, 2024 3:00 pm	12/19/2024

VOA, TO15 MASTER

Log-in Notes:

Sample Notes:

Sample Prepared by Method: EPA TO15 PREP

CAS No.	Parameter	Result	Flag	Units	Reported to LOQ	Dilution	Reference Method	Date/Time Prepared	Date/Time Analyzed	Analyst
593-60-2	Vinyl bromide	ND		ug/m³	0.437	1	EPA TO-15	12/17/2024 08:00	12/17/2024 17:55	YR
							Certifications:	NELAC-NY12058,NJDEP-NY037		
75-01-4	Vinyl Chloride	ND		ug/m³	0.128	1	EPA TO-15	12/17/2024 08:00	12/17/2024 17:55	YR
							Certifications:	NELAC-NY12058,NJDEP-NY037		

Sample Information

Client Sample ID: CAN 43000 / FC 19393 **York Sample ID:** 24L1337-03

York Project (SDG) No.	Client Project ID	Matrix	Collection Date/Time	Date Received
24L1337	170361307	Air	December 18, 2024 3:00 pm	12/19/2024

VOA, TO15 MASTER **Log-in Notes:** **Sample Notes:**

Sample Prepared by Method: EPA TO15 PREP

CAS No.	Parameter	Result	Flag	Units	Reported to LOQ	Dilution	Reference Method	Date/Time Prepared	Date/Time Analyzed	Analyst
630-20-6	* 1,1,1,2-Tetrachloroethane	ND		ug/m³	0.687	1	EPA TO-15	12/18/2024 09:00	12/18/2024 14:23	YR
							Certifications:			
71-55-6	1,1,1-Trichloroethane	ND		ug/m³	0.546	1	EPA TO-15	12/18/2024 09:00	12/18/2024 14:23	YR
							Certifications:	NELAC-NY12058,NJDEP-NY037		
79-34-5	1,1,2,2-Tetrachloroethane	ND		ug/m³	0.687	1	EPA TO-15	12/18/2024 09:00	12/18/2024 14:23	YR
							Certifications:	NELAC-NY12058,NJDEP-NY037		
76-13-1	1,1,2-Trichloro-1,2,2-trifluoroethane (Freon 113)	ND		ug/m³	0.766	1	EPA TO-15	12/18/2024 09:00	12/18/2024 14:23	YR
							Certifications:	NELAC-NY12058,NJDEP-NY037		
79-00-5	1,1,2-Trichloroethane	ND		ug/m³	0.546	1	EPA TO-15	12/18/2024 09:00	12/18/2024 14:23	YR
							Certifications:	NELAC-NY12058,NJDEP-NY037		
75-34-3	1,1-Dichloroethane	ND		ug/m³	0.405	1	EPA TO-15	12/18/2024 09:00	12/18/2024 14:23	YR
							Certifications:	NELAC-NY12058,NJDEP-NY037		
75-35-4	1,1-Dichloroethylene	ND		ug/m³	0.198	1	EPA TO-15	12/18/2024 09:00	12/18/2024 14:23	YR
							Certifications:	NELAC-NY12058,NJDEP-NY037		
120-82-1	1,2,4-Trichlorobenzene	ND		ug/m³	0.742	1	EPA TO-15	12/18/2024 09:00	12/18/2024 14:23	YR
							Certifications:	NELAC-NY12058,NJDEP-NY037		
95-63-6	1,2,4-Trimethylbenzene	ND		ug/m³	0.492	1	EPA TO-15	12/18/2024 09:00	12/18/2024 14:23	YR
							Certifications:	NELAC-NY12058,NJDEP-NY037		
106-93-4	1,2-Dibromoethane	ND		ug/m³	0.768	1	EPA TO-15	12/18/2024 09:00	12/18/2024 14:23	YR
							Certifications:	NELAC-NY12058,NJDEP-NY037		
95-50-1	1,2-Dichlorobenzene	ND		ug/m³	0.601	1	EPA TO-15	12/18/2024 09:00	12/18/2024 14:23	YR
							Certifications:	NELAC-NY12058,NJDEP-NY037		
107-06-2	1,2-Dichloroethane	ND		ug/m³	0.405	1	EPA TO-15	12/18/2024 09:00	12/18/2024 14:23	YR
							Certifications:	NELAC-NY12058,NJDEP-NY037		
78-87-5	1,2-Dichloropropane	ND		ug/m³	0.462	1	EPA TO-15	12/18/2024 09:00	12/18/2024 14:23	YR
							Certifications:	NELAC-NY12058,NJDEP-NY037		
76-14-2	1,2-Dichlorotetrafluoroethane	ND		ug/m³	0.699	1	EPA TO-15	12/18/2024 09:00	12/18/2024 14:23	YR
							Certifications:	NELAC-NY12058,NJDEP-NY037		
108-67-8	1,3,5-Trimethylbenzene	ND		ug/m³	0.492	1	EPA TO-15	12/18/2024 09:00	12/18/2024 14:23	YR
							Certifications:	NELAC-NY12058,NJDEP-NY037		
106-99-0	1,3-Butadiene	ND		ug/m³	0.664	1	EPA TO-15	12/18/2024 09:00	12/18/2024 14:23	YR
							Certifications:	NELAC-NY12058,NJDEP-NY037		
541-73-1	1,3-Dichlorobenzene	ND		ug/m³	0.601	1	EPA TO-15	12/18/2024 09:00	12/18/2024 14:23	YR
							Certifications:	NELAC-NY12058,NJDEP-NY037		
142-28-9	* 1,3-Dichloropropane	ND		ug/m³	0.462	1	EPA TO-15	12/18/2024 09:00	12/18/2024 14:23	YR
							Certifications:			
106-46-7	1,4-Dichlorobenzene	ND		ug/m³	0.601	1	EPA TO-15	12/18/2024 09:00	12/18/2024 14:23	YR
							Certifications:	NELAC-NY12058,NJDEP-NY037		
123-91-1	1,4-Dioxane	ND		ug/m³	0.721	1	EPA TO-15	12/18/2024 09:00	12/18/2024 14:23	YR
							Certifications:	NELAC-NY12058,NJDEP-NY037		
540-84-1	* 2,2,4-Trimethylpentane	ND		ug/m³	0.234	1	EPA TO-15	12/18/2024 09:00	12/18/2024 14:23	YR
							Certifications:			
78-93-3	2-Butanone	ND		ug/m³	0.295	1	EPA TO-15	12/18/2024 09:00	12/18/2024 14:23	YR
							Certifications:	NELAC-NY12058,NJDEP-NY037		

Sample Information

Client Sample ID: CAN 43000 / FC 19393 **York Sample ID:** 24L1337-03

York Project (SDG) No.	Client Project ID	Matrix	Collection Date/Time	Date Received
24L1337	170361307	Air	December 18, 2024 3:00 pm	12/19/2024

VOA, TO15 MASTER **Log-in Notes:** **Sample Notes:**

Sample Prepared by Method: EPA TO15 PREP

CAS No.	Parameter	Result	Flag	Units	Reported to LOQ	Dilution	Reference Method	Date/Time Prepared	Date/Time Analyzed	Analyst
591-78-6	* 2-Hexanone	ND		ug/m³	0.819	1	EPA TO-15	12/18/2024 09:00	12/18/2024 14:23	YR
							Certifications:			
107-05-1	3-Chloropropene	ND		ug/m³	1.57	1	EPA TO-15	12/18/2024 09:00	12/18/2024 14:23	YR
							Certifications:	NELAC-NY12058,NJDEP-NY037		
108-10-1	4-Methyl-2-pentanone	ND		ug/m³	0.410	1	EPA TO-15	12/18/2024 09:00	12/18/2024 14:23	YR
							Certifications:	NELAC-NY12058,NJDEP-NY037		
67-64-1	Acetone	ND		ug/m³	1.90	1	EPA TO-15	12/18/2024 09:00	12/18/2024 14:23	YR
							Certifications:	NELAC-NY12058,NJDEP-NY037		
107-13-1	Acrylonitrile	ND		ug/m³	2.82	1	EPA TO-15	12/18/2024 09:00	12/18/2024 14:23	YR
							Certifications:	NELAC-NY12058,NJDEP-NY037		
71-43-2	Benzene	ND		ug/m³	0.319	1	EPA TO-15	12/18/2024 09:00	12/18/2024 14:23	YR
							Certifications:	NELAC-NY12058,NJDEP-NY037		
100-44-7	Benzyl chloride	ND		ug/m³	0.518	1	EPA TO-15	12/18/2024 09:00	12/18/2024 14:23	YR
							Certifications:	NELAC-NY12058,NJDEP-NY037		
75-27-4	Bromodichloromethane	ND		ug/m³	0.670	1	EPA TO-15	12/18/2024 09:00	12/18/2024 14:23	YR
							Certifications:	NELAC-NY12058,NJDEP-NY037		
75-25-2	Bromoform	ND		ug/m³	1.03	1	EPA TO-15	12/18/2024 09:00	12/18/2024 14:23	YR
							Certifications:	NELAC-NY12058,NJDEP-NY037		
74-83-9	Bromomethane	ND		ug/m³	0.388	1	EPA TO-15	12/18/2024 09:00	12/18/2024 14:23	YR
							Certifications:	NELAC-NY12058,NJDEP-NY037		
75-15-0	Carbon disulfide	ND		ug/m³	0.311	1	EPA TO-15	12/18/2024 09:00	12/18/2024 14:23	YR
							Certifications:	NELAC-NY12058,NJDEP-NY037		
56-23-5	Carbon tetrachloride	ND		ug/m³	0.157	1	EPA TO-15	12/18/2024 09:00	12/18/2024 14:23	YR
							Certifications:	NELAC-NY12058,NJDEP-NY037		
108-90-7	Chlorobenzene	ND		ug/m³	0.460	1	EPA TO-15	12/18/2024 09:00	12/18/2024 14:23	YR
							Certifications:	NELAC-NY12058,NJDEP-NY037		
75-00-3	Chloroethane	ND		ug/m³	0.264	1	EPA TO-15	12/18/2024 09:00	12/18/2024 14:23	YR
							Certifications:	NELAC-NY12058,NJDEP-NY037		
67-66-3	Chloroform	ND		ug/m³	0.488	1	EPA TO-15	12/18/2024 09:00	12/18/2024 14:23	YR
							Certifications:	NELAC-NY12058,NJDEP-NY037		
74-87-3	Chloromethane	ND		ug/m³	0.207	1	EPA TO-15	12/18/2024 09:00	12/18/2024 14:23	YR
							Certifications:	NELAC-NY12058,NJDEP-NY037		
156-59-2	cis-1,2-Dichloroethylene	ND		ug/m³	0.198	1	EPA TO-15	12/18/2024 09:00	12/18/2024 14:23	YR
							Certifications:	NELAC-NY12058,NJDEP-NY037		
10061-01-5	cis-1,3-Dichloropropylene	ND		ug/m³	0.454	1	EPA TO-15	12/18/2024 09:00	12/18/2024 14:23	YR
							Certifications:	NELAC-NY12058,NJDEP-NY037		
110-82-7	Cyclohexane	ND		ug/m³	0.344	1	EPA TO-15	12/18/2024 09:00	12/18/2024 14:23	YR
							Certifications:	NELAC-NY12058,NJDEP-NY037		
124-48-1	Dibromochloromethane	ND		ug/m³	0.852	1	EPA TO-15	12/18/2024 09:00	12/18/2024 14:23	YR
							Certifications:	NELAC-NY12058,NJDEP-NY037		
75-71-8	Dichlorodifluoromethane	ND		ug/m³	0.495	1	EPA TO-15	12/18/2024 09:00	12/18/2024 14:23	YR
							Certifications:	NELAC-NY12058,NJDEP-NY037		
141-78-6	* Ethyl acetate	ND		ug/m³	0.721	1	EPA TO-15	12/18/2024 09:00	12/18/2024 14:23	YR
							Certifications:			

Sample Information

Client Sample ID: CAN 43000 / FC 19393 **York Sample ID:** 24L1337-03

York Project (SDG) No.	Client Project ID	Matrix	Collection Date/Time	Date Received
24L1337	170361307	Air	December 18, 2024 3:00 pm	12/19/2024

VOA, TO15 MASTER **Log-in Notes:** **Sample Notes:**

Sample Prepared by Method: EPA TO15 PREP

CAS No.	Parameter	Result	Flag	Units	Reported to LOQ	Dilution	Reference Method	Date/Time Prepared	Date/Time Analyzed	Analyst
100-41-4	Ethyl Benzene	ND		ug/m³	0.434	1	EPA TO-15	12/18/2024 09:00	12/18/2024 14:23	YR
							Certifications:	NELAC-NY12058,NJDEP-NY037		
87-68-3	Hexachlorobutadiene	ND		ug/m³	1.07	1	EPA TO-15	12/18/2024 09:00	12/18/2024 14:23	YR
							Certifications:	NELAC-NY12058,NJDEP-NY037		
67-63-0	Isopropanol	ND		ug/m³	1.47	1	EPA TO-15	12/18/2024 09:00	12/18/2024 14:23	YR
							Certifications:	NELAC-NY12058,NJDEP-NY037		
80-62-6	Methyl Methacrylate	ND		ug/m³	0.409	1	EPA TO-15	12/18/2024 09:00	12/18/2024 14:23	YR
							Certifications:	NELAC-NY12058,NJDEP-NY037		
1634-04-4	Methyl tert-butyl ether (MTBE)	ND		ug/m³	0.361	1	EPA TO-15	12/18/2024 09:00	12/18/2024 14:23	YR
							Certifications:	NELAC-NY12058,NJDEP-NY037		
75-09-2	Methylene chloride	ND		ug/m³	2.08	1	EPA TO-15	12/18/2024 09:00	12/18/2024 14:23	YR
							Certifications:	NELAC-NY12058,NJDEP-NY037		
91-20-3	* Naphthalene	ND		ug/m³	1.05	1	EPA TO-15	12/18/2024 09:00	12/18/2024 14:23	YR
							Certifications:	NJDEP-NY037		
142-82-5	n-Heptane	ND		ug/m³	0.410	1	EPA TO-15	12/18/2024 09:00	12/18/2024 14:23	YR
							Certifications:	NELAC-NY12058,NJDEP-NY037		
110-54-3	n-Hexane	ND		ug/m³	0.352	1	EPA TO-15	12/18/2024 09:00	12/18/2024 14:23	YR
							Certifications:	NELAC-NY12058,NJDEP-NY037		
95-47-6	o-Xylene	ND		ug/m³	0.434	1	EPA TO-15	12/18/2024 09:00	12/18/2024 14:23	YR
							Certifications:	NELAC-NY12058,NJDEP-NY037		
179601-23-1	p- & m- Xylenes	ND		ug/m³	0.868	1	EPA TO-15	12/18/2024 09:00	12/18/2024 14:23	YR
							Certifications:	NELAC-NY12058,NJDEP-NY037		
622-96-8	* p-Ethyltoluene	ND		ug/m³	0.492	1	EPA TO-15	12/18/2024 09:00	12/18/2024 14:23	YR
							Certifications:			
115-07-1	* Propylene	ND		ug/m³	0.172	1	EPA TO-15	12/18/2024 09:00	12/18/2024 14:23	YR
							Certifications:			
100-42-5	Styrene	ND		ug/m³	0.426	1	EPA TO-15	12/18/2024 09:00	12/18/2024 14:23	YR
							Certifications:	NELAC-NY12058,NJDEP-NY037		
127-18-4	Tetrachloroethylene	ND		ug/m³	0.678	1	EPA TO-15	12/18/2024 09:00	12/18/2024 14:23	YR
							Certifications:	NELAC-NY12058,NJDEP-NY037		
109-99-9	* Tetrahydrofuran	ND		ug/m³	0.590	1	EPA TO-15	12/18/2024 09:00	12/18/2024 14:23	YR
							Certifications:			
108-88-3	Toluene	ND		ug/m³	0.377	1	EPA TO-15	12/18/2024 09:00	12/18/2024 14:23	YR
							Certifications:	NELAC-NY12058,NJDEP-NY037		
156-60-5	trans-1,2-Dichloroethylene	ND		ug/m³	0.396	1	EPA TO-15	12/18/2024 09:00	12/18/2024 14:23	YR
							Certifications:	NELAC-NY12058,NJDEP-NY037		
10061-02-6	trans-1,3-Dichloropropylene	ND		ug/m³	0.454	1	EPA TO-15	12/18/2024 09:00	12/18/2024 14:23	YR
							Certifications:	NELAC-NY12058,NJDEP-NY037		
79-01-6	Trichloroethylene	ND		ug/m³	0.134	1	EPA TO-15	12/18/2024 09:00	12/18/2024 14:23	YR
							Certifications:	NELAC-NY12058,NJDEP-NY037		
75-69-4	Trichlorofluoromethane (Freon 11)	ND		ug/m³	0.562	1	EPA TO-15	12/18/2024 09:00	12/18/2024 14:23	YR
							Certifications:	NELAC-NY12058,NJDEP-NY037		
108-05-4	Vinyl acetate	ND		ug/m³	0.352	1	EPA TO-15	12/18/2024 09:00	12/18/2024 14:23	YR
							Certifications:	NELAC-NY12058,NJDEP-NY037		

Sample Information

Client Sample ID: **CAN 43000 / FC 19393** **York Sample ID:** **24L1337-03**

York Project (SDG) No.	Client Project ID	Matrix	Collection Date/Time	Date Received
24L1337	170361307	Air	December 18, 2024 3:00 pm	12/19/2024

VOA, TO15 MASTER

Log-in Notes:

Sample Notes:

Sample Prepared by Method: EPA TO15 PREP

CAS No.	Parameter	Result	Flag	Units	Reported to LOQ	Dilution	Reference Method	Date/Time Prepared	Date/Time Analyzed	Analyst
593-60-2	Vinyl bromide	ND		ug/m³	0.437	1	EPA TO-15	12/18/2024 09:00	12/18/2024 14:23	YR
							Certifications:	NELAC-NY12058,NJDEP-NY037		
75-01-4	Vinyl Chloride	ND		ug/m³	0.128	1	EPA TO-15	12/18/2024 09:00	12/18/2024 14:23	YR
							Certifications:	NELAC-NY12058,NJDEP-NY037		

Sample Information

Client Sample ID: CAN 49574 / FC 21016 **York Sample ID:** 24L1337-04

York Project (SDG) No.	Client Project ID	Matrix	Collection Date/Time	Date Received
24L1337	170361307	Air	December 18, 2024 3:00 pm	12/19/2024

VOA, TO15 MASTER **Log-in Notes:** **Sample Notes:**

Sample Prepared by Method: EPA TO15 PREP

CAS No.	Parameter	Result	Flag	Units	Reported to LOQ	Dilution	Reference Method	Date/Time Prepared	Date/Time Analyzed	Analyst
630-20-6	* 1,1,1,2-Tetrachloroethane	ND		ug/m³	0.687	1	EPA TO-15	12/17/2024 08:00	12/17/2024 19:40	YR
							Certifications:			
71-55-6	1,1,1-Trichloroethane	ND		ug/m³	0.546	1	EPA TO-15	12/17/2024 08:00	12/17/2024 19:40	YR
							Certifications:	NELAC-NY12058,NJDEP-NY037		
79-34-5	1,1,2,2-Tetrachloroethane	ND		ug/m³	0.687	1	EPA TO-15	12/17/2024 08:00	12/17/2024 19:40	YR
							Certifications:	NELAC-NY12058,NJDEP-NY037		
76-13-1	1,1,2-Trichloro-1,2,2-trifluoroethane (Freon 113)	ND		ug/m³	0.766	1	EPA TO-15	12/17/2024 08:00	12/17/2024 19:40	YR
							Certifications:	NELAC-NY12058,NJDEP-NY037		
79-00-5	1,1,2-Trichloroethane	ND		ug/m³	0.546	1	EPA TO-15	12/17/2024 08:00	12/17/2024 19:40	YR
							Certifications:	NELAC-NY12058,NJDEP-NY037		
75-34-3	1,1-Dichloroethane	ND		ug/m³	0.405	1	EPA TO-15	12/17/2024 08:00	12/17/2024 19:40	YR
							Certifications:	NELAC-NY12058,NJDEP-NY037		
75-35-4	1,1-Dichloroethylene	ND		ug/m³	0.198	1	EPA TO-15	12/17/2024 08:00	12/17/2024 19:40	YR
							Certifications:	NELAC-NY12058,NJDEP-NY037		
120-82-1	1,2,4-Trichlorobenzene	ND		ug/m³	0.742	1	EPA TO-15	12/17/2024 08:00	12/17/2024 19:40	YR
							Certifications:	NELAC-NY12058,NJDEP-NY037		
95-63-6	1,2,4-Trimethylbenzene	ND		ug/m³	0.492	1	EPA TO-15	12/17/2024 08:00	12/17/2024 19:40	YR
							Certifications:	NELAC-NY12058,NJDEP-NY037		
106-93-4	1,2-Dibromoethane	ND		ug/m³	0.768	1	EPA TO-15	12/17/2024 08:00	12/17/2024 19:40	YR
							Certifications:	NELAC-NY12058,NJDEP-NY037		
95-50-1	1,2-Dichlorobenzene	ND		ug/m³	0.601	1	EPA TO-15	12/17/2024 08:00	12/17/2024 19:40	YR
							Certifications:	NELAC-NY12058,NJDEP-NY037		
107-06-2	1,2-Dichloroethane	ND		ug/m³	0.405	1	EPA TO-15	12/17/2024 08:00	12/17/2024 19:40	YR
							Certifications:	NELAC-NY12058,NJDEP-NY037		
78-87-5	1,2-Dichloropropane	ND		ug/m³	0.462	1	EPA TO-15	12/17/2024 08:00	12/17/2024 19:40	YR
							Certifications:	NELAC-NY12058,NJDEP-NY037		
76-14-2	1,2-Dichlorotetrafluoroethane	ND		ug/m³	0.699	1	EPA TO-15	12/17/2024 08:00	12/17/2024 19:40	YR
							Certifications:	NELAC-NY12058,NJDEP-NY037		
108-67-8	1,3,5-Trimethylbenzene	ND		ug/m³	0.492	1	EPA TO-15	12/17/2024 08:00	12/17/2024 19:40	YR
							Certifications:	NELAC-NY12058,NJDEP-NY037		
106-99-0	1,3-Butadiene	ND		ug/m³	0.664	1	EPA TO-15	12/17/2024 08:00	12/17/2024 19:40	YR
							Certifications:	NELAC-NY12058,NJDEP-NY037		
541-73-1	1,3-Dichlorobenzene	ND		ug/m³	0.601	1	EPA TO-15	12/17/2024 08:00	12/17/2024 19:40	YR
							Certifications:	NELAC-NY12058,NJDEP-NY037		
142-28-9	* 1,3-Dichloropropane	ND		ug/m³	0.462	1	EPA TO-15	12/17/2024 08:00	12/17/2024 19:40	YR
							Certifications:			
106-46-7	1,4-Dichlorobenzene	ND		ug/m³	0.601	1	EPA TO-15	12/17/2024 08:00	12/17/2024 19:40	YR
							Certifications:	NELAC-NY12058,NJDEP-NY037		
123-91-1	1,4-Dioxane	ND		ug/m³	0.721	1	EPA TO-15	12/17/2024 08:00	12/17/2024 19:40	YR
							Certifications:	NELAC-NY12058,NJDEP-NY037		
540-84-1	* 2,2,4-Trimethylpentane	ND		ug/m³	0.234	1	EPA TO-15	12/17/2024 08:00	12/17/2024 19:40	YR
							Certifications:			
78-93-3	2-Butanone	ND		ug/m³	0.295	1	EPA TO-15	12/17/2024 08:00	12/17/2024 19:40	YR
							Certifications:	NELAC-NY12058,NJDEP-NY037		

Sample Information

Client Sample ID: CAN 49574 / FC 21016 **York Sample ID:** 24L1337-04

York Project (SDG) No.	Client Project ID	Matrix	Collection Date/Time	Date Received
24L1337	170361307	Air	December 18, 2024 3:00 pm	12/19/2024

VOA, TO15 MASTER **Log-in Notes:** **Sample Notes:**

Sample Prepared by Method: EPA TO15 PREP

CAS No.	Parameter	Result	Flag	Units	Reported to LOQ	Dilution	Reference Method	Date/Time Prepared	Date/Time Analyzed	Analyst
591-78-6	* 2-Hexanone	ND		ug/m³	0.819	1	EPA TO-15	12/17/2024 08:00	12/17/2024 19:40	YR
							Certifications:			
107-05-1	3-Chloropropene	ND		ug/m³	1.57	1	EPA TO-15	12/17/2024 08:00	12/17/2024 19:40	YR
							Certifications:	NELAC-NY12058,NJDEP-NY037		
108-10-1	4-Methyl-2-pentanone	ND		ug/m³	0.410	1	EPA TO-15	12/17/2024 08:00	12/17/2024 19:40	YR
							Certifications:	NELAC-NY12058,NJDEP-NY037		
67-64-1	Acetone	ND		ug/m³	1.90	1	EPA TO-15	12/17/2024 08:00	12/17/2024 19:40	YR
							Certifications:	NELAC-NY12058,NJDEP-NY037		
107-13-1	Acrylonitrile	ND		ug/m³	2.82	1	EPA TO-15	12/17/2024 08:00	12/17/2024 19:40	YR
							Certifications:	NELAC-NY12058,NJDEP-NY037		
71-43-2	Benzene	ND		ug/m³	0.319	1	EPA TO-15	12/17/2024 08:00	12/17/2024 19:40	YR
							Certifications:	NELAC-NY12058,NJDEP-NY037		
100-44-7	Benzyl chloride	ND		ug/m³	0.518	1	EPA TO-15	12/17/2024 08:00	12/17/2024 19:40	YR
							Certifications:	NELAC-NY12058,NJDEP-NY037		
75-27-4	Bromodichloromethane	ND		ug/m³	0.670	1	EPA TO-15	12/17/2024 08:00	12/17/2024 19:40	YR
							Certifications:	NELAC-NY12058,NJDEP-NY037		
75-25-2	Bromoform	ND		ug/m³	1.03	1	EPA TO-15	12/17/2024 08:00	12/17/2024 19:40	YR
							Certifications:	NELAC-NY12058,NJDEP-NY037		
74-83-9	Bromomethane	ND		ug/m³	0.388	1	EPA TO-15	12/17/2024 08:00	12/17/2024 19:40	YR
							Certifications:	NELAC-NY12058,NJDEP-NY037		
75-15-0	Carbon disulfide	ND		ug/m³	0.311	1	EPA TO-15	12/17/2024 08:00	12/17/2024 19:40	YR
							Certifications:	NELAC-NY12058,NJDEP-NY037		
56-23-5	Carbon tetrachloride	ND		ug/m³	0.157	1	EPA TO-15	12/17/2024 08:00	12/17/2024 19:40	YR
							Certifications:	NELAC-NY12058,NJDEP-NY037		
108-90-7	Chlorobenzene	ND		ug/m³	0.460	1	EPA TO-15	12/17/2024 08:00	12/17/2024 19:40	YR
							Certifications:	NELAC-NY12058,NJDEP-NY037		
75-00-3	Chloroethane	ND		ug/m³	0.264	1	EPA TO-15	12/17/2024 08:00	12/17/2024 19:40	YR
							Certifications:	NELAC-NY12058,NJDEP-NY037		
67-66-3	Chloroform	ND		ug/m³	0.488	1	EPA TO-15	12/17/2024 08:00	12/17/2024 19:40	YR
							Certifications:	NELAC-NY12058,NJDEP-NY037		
74-87-3	Chloromethane	ND		ug/m³	0.207	1	EPA TO-15	12/17/2024 08:00	12/17/2024 19:40	YR
							Certifications:	NELAC-NY12058,NJDEP-NY037		
156-59-2	cis-1,2-Dichloroethylene	ND		ug/m³	0.198	1	EPA TO-15	12/17/2024 08:00	12/17/2024 19:40	YR
							Certifications:	NELAC-NY12058,NJDEP-NY037		
10061-01-5	cis-1,3-Dichloropropylene	ND		ug/m³	0.454	1	EPA TO-15	12/17/2024 08:00	12/17/2024 19:40	YR
							Certifications:	NELAC-NY12058,NJDEP-NY037		
110-82-7	Cyclohexane	ND		ug/m³	0.344	1	EPA TO-15	12/17/2024 08:00	12/17/2024 19:40	YR
							Certifications:	NELAC-NY12058,NJDEP-NY037		
124-48-1	Dibromochloromethane	ND		ug/m³	0.852	1	EPA TO-15	12/17/2024 08:00	12/17/2024 19:40	YR
							Certifications:	NELAC-NY12058,NJDEP-NY037		
75-71-8	Dichlorodifluoromethane	ND		ug/m³	0.495	1	EPA TO-15	12/17/2024 08:00	12/17/2024 19:40	YR
							Certifications:	NELAC-NY12058,NJDEP-NY037		
141-78-6	* Ethyl acetate	ND		ug/m³	0.721	1	EPA TO-15	12/17/2024 08:00	12/17/2024 19:40	YR
							Certifications:			

Sample Information

Client Sample ID: CAN 49574 / FC 21016 **York Sample ID:** 24L1337-04

York Project (SDG) No.	Client Project ID	Matrix	Collection Date/Time	Date Received
24L1337	170361307	Air	December 18, 2024 3:00 pm	12/19/2024

VOA, TO15 MASTER **Log-in Notes:** **Sample Notes:**

Sample Prepared by Method: EPA TO15 PREP

CAS No.	Parameter	Result	Flag	Units	Reported to LOQ	Dilution	Reference Method	Date/Time Prepared	Date/Time Analyzed	Analyst
100-41-4	Ethyl Benzene	ND		ug/m³	0.434	1	EPA TO-15	12/17/2024 08:00	12/17/2024 19:40	YR
							Certifications: NELAC-NY12058,NJDEP-NY037			
87-68-3	Hexachlorobutadiene	ND		ug/m³	1.07	1	EPA TO-15	12/17/2024 08:00	12/17/2024 19:40	YR
							Certifications: NELAC-NY12058,NJDEP-NY037			
67-63-0	Isopropanol	ND		ug/m³	1.47	1	EPA TO-15	12/17/2024 08:00	12/17/2024 19:40	YR
							Certifications: NELAC-NY12058,NJDEP-NY037			
80-62-6	Methyl Methacrylate	ND		ug/m³	0.409	1	EPA TO-15	12/17/2024 08:00	12/17/2024 19:40	YR
							Certifications: NELAC-NY12058,NJDEP-NY037			
1634-04-4	Methyl tert-butyl ether (MTBE)	ND		ug/m³	0.361	1	EPA TO-15	12/17/2024 08:00	12/17/2024 19:40	YR
							Certifications: NELAC-NY12058,NJDEP-NY037			
75-09-2	Methylene chloride	ND		ug/m³	2.08	1	EPA TO-15	12/17/2024 08:00	12/17/2024 19:40	YR
							Certifications: NELAC-NY12058,NJDEP-NY037			
91-20-3	* Naphthalene	ND		ug/m³	1.05	1	EPA TO-15	12/17/2024 08:00	12/17/2024 19:40	YR
							Certifications: NJDEP-NY037			
142-82-5	n-Heptane	ND		ug/m³	0.410	1	EPA TO-15	12/17/2024 08:00	12/17/2024 19:40	YR
							Certifications: NELAC-NY12058,NJDEP-NY037			
110-54-3	n-Hexane	ND		ug/m³	0.352	1	EPA TO-15	12/17/2024 08:00	12/17/2024 19:40	YR
							Certifications: NELAC-NY12058,NJDEP-NY037			
95-47-6	o-Xylene	ND		ug/m³	0.434	1	EPA TO-15	12/17/2024 08:00	12/17/2024 19:40	YR
							Certifications: NELAC-NY12058,NJDEP-NY037			
179601-23-1	p- & m- Xylenes	ND		ug/m³	0.868	1	EPA TO-15	12/17/2024 08:00	12/17/2024 19:40	YR
							Certifications: NELAC-NY12058,NJDEP-NY037			
622-96-8	* p-Ethyltoluene	ND		ug/m³	0.492	1	EPA TO-15	12/17/2024 08:00	12/17/2024 19:40	YR
							Certifications:			
115-07-1	* Propylene	ND		ug/m³	0.172	1	EPA TO-15	12/17/2024 08:00	12/17/2024 19:40	YR
							Certifications:			
100-42-5	Styrene	ND		ug/m³	0.426	1	EPA TO-15	12/17/2024 08:00	12/17/2024 19:40	YR
							Certifications: NELAC-NY12058,NJDEP-NY037			
127-18-4	Tetrachloroethylene	ND		ug/m³	0.678	1	EPA TO-15	12/17/2024 08:00	12/17/2024 19:40	YR
							Certifications: NELAC-NY12058,NJDEP-NY037			
109-99-9	* Tetrahydrofuran	ND		ug/m³	0.590	1	EPA TO-15	12/17/2024 08:00	12/17/2024 19:40	YR
							Certifications:			
108-88-3	Toluene	ND		ug/m³	0.377	1	EPA TO-15	12/17/2024 08:00	12/17/2024 19:40	YR
							Certifications: NELAC-NY12058,NJDEP-NY037			
156-60-5	trans-1,2-Dichloroethylene	ND		ug/m³	0.396	1	EPA TO-15	12/17/2024 08:00	12/17/2024 19:40	YR
							Certifications: NELAC-NY12058,NJDEP-NY037			
10061-02-6	trans-1,3-Dichloropropylene	ND		ug/m³	0.454	1	EPA TO-15	12/17/2024 08:00	12/17/2024 19:40	YR
							Certifications: NELAC-NY12058,NJDEP-NY037			
79-01-6	Trichloroethylene	ND		ug/m³	0.134	1	EPA TO-15	12/17/2024 08:00	12/17/2024 19:40	YR
							Certifications: NELAC-NY12058,NJDEP-NY037			
75-69-4	Trichlorofluoromethane (Freon 11)	ND		ug/m³	0.562	1	EPA TO-15	12/17/2024 08:00	12/17/2024 19:40	YR
							Certifications: NELAC-NY12058,NJDEP-NY037			
108-05-4	Vinyl acetate	ND		ug/m³	0.352	1	EPA TO-15	12/17/2024 08:00	12/17/2024 19:40	YR
							Certifications: NELAC-NY12058,NJDEP-NY037			

Sample Information

Client Sample ID: CAN 49574 / FC 21016 **York Sample ID:** 24L1337-04

York Project (SDG) No.	Client Project ID	Matrix	Collection Date/Time	Date Received
24L1337	170361307	Air	December 18, 2024 3:00 pm	12/19/2024

VOA, TO15 MASTER **Log-in Notes:** **Sample Notes:**

Sample Prepared by Method: EPA TO15 PREP

CAS No.	Parameter	Result	Flag	Units	Reported to LOQ	Dilution	Reference Method	Date/Time Prepared	Date/Time Analyzed	Analyst
593-60-2	Vinyl bromide	ND		ug/m³	0.437	1	EPA TO-15	12/17/2024 08:00	12/17/2024 19:40	YR
							Certifications:	NELAC-NY12058,NJDEP-NY037		
75-01-4	Vinyl Chloride	ND		ug/m³	0.128	1	EPA TO-15	12/17/2024 08:00	12/17/2024 19:40	YR
							Certifications:	NELAC-NY12058,NJDEP-NY037		

Sample Information

Client Sample ID: CAN 20754 / FC 20234 **York Sample ID:** 24L1337-07

York Project (SDG) No.	Client Project ID	Matrix	Collection Date/Time	Date Received
24L1337	170361307	Air	December 18, 2024 3:00 pm	12/19/2024

VOA, TO15 MASTER

Log-in Notes:

Sample Notes:

Sample Prepared by Method: EPA TO15 PREP

CAS No.	Parameter	Result	Flag	Units	Reported to LOQ	Dilution	Reference Method	Date/Time Prepared	Date/Time Analyzed	Analyst
630-20-6	* 1,1,1,2-Tetrachloroethane	ND		ug/m³	0.687	1	EPA TO-15 Certifications:	12/17/2024 08:00	12/17/2024 23:09	YR
71-55-6	1,1,1-Trichloroethane	ND		ug/m³	0.546	1	EPA TO-15 Certifications:	12/17/2024 08:00 NELAC-NY12058,NJDEP-NY037	12/17/2024 23:09	YR
79-34-5	1,1,2,2-Tetrachloroethane	ND		ug/m³	0.687	1	EPA TO-15 Certifications:	12/17/2024 08:00 NELAC-NY12058,NJDEP-NY037	12/17/2024 23:09	YR
76-13-1	1,1,2-Trichloro-1,2,2-trifluoroethane (Freon 113)	ND		ug/m³	0.766	1	EPA TO-15 Certifications:	12/17/2024 08:00 NELAC-NY12058,NJDEP-NY037	12/17/2024 23:09	YR
79-00-5	1,1,2-Trichloroethane	ND		ug/m³	0.546	1	EPA TO-15 Certifications:	12/17/2024 08:00 NELAC-NY12058,NJDEP-NY037	12/17/2024 23:09	YR
75-34-3	1,1-Dichloroethane	ND		ug/m³	0.405	1	EPA TO-15 Certifications:	12/17/2024 08:00 NELAC-NY12058,NJDEP-NY037	12/17/2024 23:09	YR
75-35-4	1,1-Dichloroethylene	ND		ug/m³	0.198	1	EPA TO-15 Certifications:	12/17/2024 08:00 NELAC-NY12058,NJDEP-NY037	12/17/2024 23:09	YR
120-82-1	1,2,4-Trichlorobenzene	ND		ug/m³	0.742	1	EPA TO-15 Certifications:	12/17/2024 08:00 NELAC-NY12058,NJDEP-NY037	12/17/2024 23:09	YR
95-63-6	1,2,4-Trimethylbenzene	ND		ug/m³	0.492	1	EPA TO-15 Certifications:	12/17/2024 08:00 NELAC-NY12058,NJDEP-NY037	12/17/2024 23:09	YR
106-93-4	1,2-Dibromoethane	ND		ug/m³	0.768	1	EPA TO-15 Certifications:	12/17/2024 08:00 NELAC-NY12058,NJDEP-NY037	12/17/2024 23:09	YR
95-50-1	1,2-Dichlorobenzene	ND		ug/m³	0.601	1	EPA TO-15 Certifications:	12/17/2024 08:00 NELAC-NY12058,NJDEP-NY037	12/17/2024 23:09	YR
107-06-2	1,2-Dichloroethane	ND		ug/m³	0.405	1	EPA TO-15 Certifications:	12/17/2024 08:00 NELAC-NY12058,NJDEP-NY037	12/17/2024 23:09	YR
78-87-5	1,2-Dichloropropane	ND		ug/m³	0.462	1	EPA TO-15 Certifications:	12/17/2024 08:00 NELAC-NY12058,NJDEP-NY037	12/17/2024 23:09	YR
76-14-2	1,2-Dichlorotetrafluoroethane	ND		ug/m³	0.699	1	EPA TO-15 Certifications:	12/17/2024 08:00 NELAC-NY12058,NJDEP-NY037	12/17/2024 23:09	YR
108-67-8	1,3,5-Trimethylbenzene	ND		ug/m³	0.492	1	EPA TO-15 Certifications:	12/17/2024 08:00 NELAC-NY12058,NJDEP-NY037	12/17/2024 23:09	YR
106-99-0	1,3-Butadiene	ND		ug/m³	0.664	1	EPA TO-15 Certifications:	12/17/2024 08:00 NELAC-NY12058,NJDEP-NY037	12/17/2024 23:09	YR
541-73-1	1,3-Dichlorobenzene	ND		ug/m³	0.601	1	EPA TO-15 Certifications:	12/17/2024 08:00 NELAC-NY12058,NJDEP-NY037	12/17/2024 23:09	YR
142-28-9	* 1,3-Dichloropropane	ND		ug/m³	0.462	1	EPA TO-15 Certifications:	12/17/2024 08:00	12/17/2024 23:09	YR
106-46-7	1,4-Dichlorobenzene	ND		ug/m³	0.601	1	EPA TO-15 Certifications:	12/17/2024 08:00 NELAC-NY12058,NJDEP-NY037	12/17/2024 23:09	YR
123-91-1	1,4-Dioxane	ND		ug/m³	0.721	1	EPA TO-15 Certifications:	12/17/2024 08:00 NELAC-NY12058,NJDEP-NY037	12/17/2024 23:09	YR
540-84-1	* 2,2,4-Trimethylpentane	ND		ug/m³	0.234	1	EPA TO-15 Certifications:	12/17/2024 08:00	12/17/2024 23:09	YR
78-93-3	2-Butanone	ND		ug/m³	0.295	1	EPA TO-15 Certifications:	12/17/2024 08:00 NELAC-NY12058,NJDEP-NY037	12/17/2024 23:09	YR

Sample Information

Client Sample ID: CAN 20754 / FC 20234 **York Sample ID:** 24L1337-07

York Project (SDG) No.	Client Project ID	Matrix	Collection Date/Time	Date Received
24L1337	170361307	Air	December 18, 2024 3:00 pm	12/19/2024

VOA, TO15 MASTER **Log-in Notes:** **Sample Notes:**

Sample Prepared by Method: EPA TO15 PREP

CAS No.	Parameter	Result	Flag	Units	Reported to LOQ	Dilution	Reference Method	Date/Time Prepared	Date/Time Analyzed	Analyst
591-78-6	* 2-Hexanone	ND		ug/m³	0.819	1	EPA TO-15	12/17/2024 08:00	12/17/2024 23:09	YR
							Certifications:			
107-05-1	3-Chloropropene	ND		ug/m³	1.57	1	EPA TO-15	12/17/2024 08:00	12/17/2024 23:09	YR
							Certifications:	NELAC-NY12058,NJDEP-NY037		
108-10-1	4-Methyl-2-pentanone	ND		ug/m³	0.410	1	EPA TO-15	12/17/2024 08:00	12/17/2024 23:09	YR
							Certifications:	NELAC-NY12058,NJDEP-NY037		
67-64-1	Acetone	ND		ug/m³	1.90	1	EPA TO-15	12/17/2024 08:00	12/17/2024 23:09	YR
							Certifications:	NELAC-NY12058,NJDEP-NY037		
107-13-1	Acrylonitrile	ND		ug/m³	2.82	1	EPA TO-15	12/17/2024 08:00	12/17/2024 23:09	YR
							Certifications:	NELAC-NY12058,NJDEP-NY037		
71-43-2	Benzene	ND		ug/m³	0.319	1	EPA TO-15	12/17/2024 08:00	12/17/2024 23:09	YR
							Certifications:	NELAC-NY12058,NJDEP-NY037		
100-44-7	Benzyl chloride	ND		ug/m³	0.518	1	EPA TO-15	12/17/2024 08:00	12/17/2024 23:09	YR
							Certifications:	NELAC-NY12058,NJDEP-NY037		
75-27-4	Bromodichloromethane	ND		ug/m³	0.670	1	EPA TO-15	12/17/2024 08:00	12/17/2024 23:09	YR
							Certifications:	NELAC-NY12058,NJDEP-NY037		
75-25-2	Bromoform	ND		ug/m³	1.03	1	EPA TO-15	12/17/2024 08:00	12/17/2024 23:09	YR
							Certifications:	NELAC-NY12058,NJDEP-NY037		
74-83-9	Bromomethane	ND		ug/m³	0.388	1	EPA TO-15	12/17/2024 08:00	12/17/2024 23:09	YR
							Certifications:	NELAC-NY12058,NJDEP-NY037		
75-15-0	Carbon disulfide	ND		ug/m³	0.311	1	EPA TO-15	12/17/2024 08:00	12/17/2024 23:09	YR
							Certifications:	NELAC-NY12058,NJDEP-NY037		
56-23-5	Carbon tetrachloride	ND		ug/m³	0.157	1	EPA TO-15	12/17/2024 08:00	12/17/2024 23:09	YR
							Certifications:	NELAC-NY12058,NJDEP-NY037		
108-90-7	Chlorobenzene	ND		ug/m³	0.460	1	EPA TO-15	12/17/2024 08:00	12/17/2024 23:09	YR
							Certifications:	NELAC-NY12058,NJDEP-NY037		
75-00-3	Chloroethane	ND		ug/m³	0.264	1	EPA TO-15	12/17/2024 08:00	12/17/2024 23:09	YR
							Certifications:	NELAC-NY12058,NJDEP-NY037		
67-66-3	Chloroform	ND		ug/m³	0.488	1	EPA TO-15	12/17/2024 08:00	12/17/2024 23:09	YR
							Certifications:	NELAC-NY12058,NJDEP-NY037		
74-87-3	Chloromethane	ND		ug/m³	0.207	1	EPA TO-15	12/17/2024 08:00	12/17/2024 23:09	YR
							Certifications:	NELAC-NY12058,NJDEP-NY037		
156-59-2	cis-1,2-Dichloroethylene	ND		ug/m³	0.198	1	EPA TO-15	12/17/2024 08:00	12/17/2024 23:09	YR
							Certifications:	NELAC-NY12058,NJDEP-NY037		
10061-01-5	cis-1,3-Dichloropropylene	ND		ug/m³	0.454	1	EPA TO-15	12/17/2024 08:00	12/17/2024 23:09	YR
							Certifications:	NELAC-NY12058,NJDEP-NY037		
110-82-7	Cyclohexane	ND		ug/m³	0.344	1	EPA TO-15	12/17/2024 08:00	12/17/2024 23:09	YR
							Certifications:	NELAC-NY12058,NJDEP-NY037		
124-48-1	Dibromochloromethane	ND		ug/m³	0.852	1	EPA TO-15	12/17/2024 08:00	12/17/2024 23:09	YR
							Certifications:	NELAC-NY12058,NJDEP-NY037		
75-71-8	Dichlorodifluoromethane	ND		ug/m³	0.495	1	EPA TO-15	12/17/2024 08:00	12/17/2024 23:09	YR
							Certifications:	NELAC-NY12058,NJDEP-NY037		
141-78-6	* Ethyl acetate	ND		ug/m³	0.721	1	EPA TO-15	12/17/2024 08:00	12/17/2024 23:09	YR
							Certifications:			

Sample Information

Client Sample ID: CAN 20754 / FC 20234 **York Sample ID:** 24L1337-07

York Project (SDG) No.	Client Project ID	Matrix	Collection Date/Time	Date Received
24L1337	170361307	Air	December 18, 2024 3:00 pm	12/19/2024

VOA, TO15 MASTER **Log-in Notes:** **Sample Notes:**

Sample Prepared by Method: EPA TO15 PREP

CAS No.	Parameter	Result	Flag	Units	Reported to LOQ	Dilution	Reference Method	Date/Time Prepared	Date/Time Analyzed	Analyst
100-41-4	Ethyl Benzene	ND		ug/m³	0.434	1	EPA TO-15	12/17/2024 08:00	12/17/2024 23:09	YR
							Certifications:	NELAC-NY12058,NJDEP-NY037		
87-68-3	Hexachlorobutadiene	ND		ug/m³	1.07	1	EPA TO-15	12/17/2024 08:00	12/17/2024 23:09	YR
							Certifications:	NELAC-NY12058,NJDEP-NY037		
67-63-0	Isopropanol	ND		ug/m³	1.47	1	EPA TO-15	12/17/2024 08:00	12/17/2024 23:09	YR
							Certifications:	NELAC-NY12058,NJDEP-NY037		
80-62-6	Methyl Methacrylate	ND		ug/m³	0.409	1	EPA TO-15	12/17/2024 08:00	12/17/2024 23:09	YR
							Certifications:	NELAC-NY12058,NJDEP-NY037		
1634-04-4	Methyl tert-butyl ether (MTBE)	ND		ug/m³	0.361	1	EPA TO-15	12/17/2024 08:00	12/17/2024 23:09	YR
							Certifications:	NELAC-NY12058,NJDEP-NY037		
75-09-2	Methylene chloride	ND		ug/m³	2.08	1	EPA TO-15	12/17/2024 08:00	12/17/2024 23:09	YR
							Certifications:	NELAC-NY12058,NJDEP-NY037		
91-20-3	* Naphthalene	ND		ug/m³	1.05	1	EPA TO-15	12/17/2024 08:00	12/17/2024 23:09	YR
							Certifications:	NJDEP-NY037		
142-82-5	n-Heptane	ND		ug/m³	0.410	1	EPA TO-15	12/17/2024 08:00	12/17/2024 23:09	YR
							Certifications:	NELAC-NY12058,NJDEP-NY037		
110-54-3	n-Hexane	ND		ug/m³	0.352	1	EPA TO-15	12/17/2024 08:00	12/17/2024 23:09	YR
							Certifications:	NELAC-NY12058,NJDEP-NY037		
95-47-6	o-Xylene	ND		ug/m³	0.434	1	EPA TO-15	12/17/2024 08:00	12/17/2024 23:09	YR
							Certifications:	NELAC-NY12058,NJDEP-NY037		
179601-23-1	p- & m- Xylenes	ND		ug/m³	0.868	1	EPA TO-15	12/17/2024 08:00	12/17/2024 23:09	YR
							Certifications:	NELAC-NY12058,NJDEP-NY037		
622-96-8	* p-Ethyltoluene	ND		ug/m³	0.492	1	EPA TO-15	12/17/2024 08:00	12/17/2024 23:09	YR
							Certifications:			
115-07-1	* Propylene	ND		ug/m³	0.172	1	EPA TO-15	12/17/2024 08:00	12/17/2024 23:09	YR
							Certifications:			
100-42-5	Styrene	ND		ug/m³	0.426	1	EPA TO-15	12/17/2024 08:00	12/17/2024 23:09	YR
							Certifications:	NELAC-NY12058,NJDEP-NY037		
127-18-4	Tetrachloroethylene	ND		ug/m³	0.678	1	EPA TO-15	12/17/2024 08:00	12/17/2024 23:09	YR
							Certifications:	NELAC-NY12058,NJDEP-NY037		
109-99-9	* Tetrahydrofuran	ND		ug/m³	0.590	1	EPA TO-15	12/17/2024 08:00	12/17/2024 23:09	YR
							Certifications:			
108-88-3	Toluene	ND		ug/m³	0.377	1	EPA TO-15	12/17/2024 08:00	12/17/2024 23:09	YR
							Certifications:	NELAC-NY12058,NJDEP-NY037		
156-60-5	trans-1,2-Dichloroethylene	ND		ug/m³	0.396	1	EPA TO-15	12/17/2024 08:00	12/17/2024 23:09	YR
							Certifications:	NELAC-NY12058,NJDEP-NY037		
10061-02-6	trans-1,3-Dichloropropylene	ND		ug/m³	0.454	1	EPA TO-15	12/17/2024 08:00	12/17/2024 23:09	YR
							Certifications:	NELAC-NY12058,NJDEP-NY037		
79-01-6	Trichloroethylene	ND		ug/m³	0.134	1	EPA TO-15	12/17/2024 08:00	12/17/2024 23:09	YR
							Certifications:	NELAC-NY12058,NJDEP-NY037		
75-69-4	Trichlorofluoromethane (Freon 11)	ND		ug/m³	0.562	1	EPA TO-15	12/17/2024 08:00	12/17/2024 23:09	YR
							Certifications:	NELAC-NY12058,NJDEP-NY037		
108-05-4	Vinyl acetate	ND		ug/m³	0.352	1	EPA TO-15	12/17/2024 08:00	12/17/2024 23:09	YR
							Certifications:	NELAC-NY12058,NJDEP-NY037		

Sample Information

Client Sample ID: **CAN 20754 / FC 20234** **York Sample ID:** **24L1337-07**

York Project (SDG) No.	Client Project ID	Matrix	Collection Date/Time	Date Received
24L1337	170361307	Air	December 18, 2024 3:00 pm	12/19/2024

VOA, TO15 MASTER

Log-in Notes:

Sample Notes:

Sample Prepared by Method: EPA TO15 PREP

CAS No.	Parameter	Result	Flag	Units	Reported to LOQ	Dilution	Reference Method	Date/Time Prepared	Date/Time Analyzed	Analyst
593-60-2	Vinyl bromide	ND		ug/m³	0.437	1	EPA TO-15	12/17/2024 08:00	12/17/2024 23:09	YR
							Certifications:	NELAC-NY12058,NJDEP-NY037		
75-01-4	Vinyl Chloride	ND		ug/m³	0.128	1	EPA TO-15	12/17/2024 08:00	12/17/2024 23:09	YR
							Certifications:	NELAC-NY12058,NJDEP-NY037		

Sample Information

Client Sample ID: CAN 48292 / FC 21031 **York Sample ID:** 24L1337-08

York Project (SDG) No.	Client Project ID	Matrix	Collection Date/Time	Date Received
24L1337	170361307	Air	December 18, 2024 3:00 pm	12/19/2024

VOA, TO15 MASTER **Log-in Notes:** **Sample Notes:**

Sample Prepared by Method: EPA TO15 PREP

CAS No.	Parameter	Result	Flag	Units	Reported to LOQ	Dilution	Reference Method	Date/Time Prepared	Date/Time Analyzed	Analyst
630-20-6	* 1,1,1,2-Tetrachloroethane	ND		ug/m³	0.687	1	EPA TO-15	12/19/2024 10:00	12/19/2024 23:14	YR
							Certifications:			
71-55-6	1,1,1-Trichloroethane	ND		ug/m³	0.546	1	EPA TO-15	12/19/2024 10:00	12/19/2024 23:14	YR
							Certifications:	NELAC-NY12058,NJDEP-NY037		
79-34-5	1,1,2,2-Tetrachloroethane	ND		ug/m³	0.687	1	EPA TO-15	12/19/2024 10:00	12/19/2024 23:14	YR
							Certifications:	NELAC-NY12058,NJDEP-NY037		
76-13-1	1,1,2-Trichloro-1,2,2-trifluoroethane (Freon 113)	ND		ug/m³	0.766	1	EPA TO-15	12/19/2024 10:00	12/19/2024 23:14	YR
							Certifications:	NELAC-NY12058,NJDEP-NY037		
79-00-5	1,1,2-Trichloroethane	ND		ug/m³	0.546	1	EPA TO-15	12/19/2024 10:00	12/19/2024 23:14	YR
							Certifications:	NELAC-NY12058,NJDEP-NY037		
75-34-3	1,1-Dichloroethane	ND		ug/m³	0.405	1	EPA TO-15	12/19/2024 10:00	12/19/2024 23:14	YR
							Certifications:	NELAC-NY12058,NJDEP-NY037		
75-35-4	1,1-Dichloroethylene	ND		ug/m³	0.198	1	EPA TO-15	12/19/2024 10:00	12/19/2024 23:14	YR
							Certifications:	NELAC-NY12058,NJDEP-NY037		
120-82-1	1,2,4-Trichlorobenzene	ND		ug/m³	0.742	1	EPA TO-15	12/19/2024 10:00	12/19/2024 23:14	YR
							Certifications:	NELAC-NY12058,NJDEP-NY037		
95-63-6	1,2,4-Trimethylbenzene	ND		ug/m³	0.492	1	EPA TO-15	12/19/2024 10:00	12/19/2024 23:14	YR
							Certifications:	NELAC-NY12058,NJDEP-NY037		
106-93-4	1,2-Dibromoethane	ND		ug/m³	0.768	1	EPA TO-15	12/19/2024 10:00	12/19/2024 23:14	YR
							Certifications:	NELAC-NY12058,NJDEP-NY037		
95-50-1	1,2-Dichlorobenzene	ND		ug/m³	0.601	1	EPA TO-15	12/19/2024 10:00	12/19/2024 23:14	YR
							Certifications:	NELAC-NY12058,NJDEP-NY037		
107-06-2	1,2-Dichloroethane	ND		ug/m³	0.405	1	EPA TO-15	12/19/2024 10:00	12/19/2024 23:14	YR
							Certifications:	NELAC-NY12058,NJDEP-NY037		
78-87-5	1,2-Dichloropropane	ND		ug/m³	0.462	1	EPA TO-15	12/19/2024 10:00	12/19/2024 23:14	YR
							Certifications:	NELAC-NY12058,NJDEP-NY037		
76-14-2	1,2-Dichlorotetrafluoroethane	ND		ug/m³	0.699	1	EPA TO-15	12/19/2024 10:00	12/19/2024 23:14	YR
							Certifications:	NELAC-NY12058,NJDEP-NY037		
108-67-8	1,3,5-Trimethylbenzene	ND		ug/m³	0.492	1	EPA TO-15	12/19/2024 10:00	12/19/2024 23:14	YR
							Certifications:	NELAC-NY12058,NJDEP-NY037		
106-99-0	1,3-Butadiene	ND		ug/m³	0.664	1	EPA TO-15	12/19/2024 10:00	12/19/2024 23:14	YR
							Certifications:	NELAC-NY12058,NJDEP-NY037		
541-73-1	1,3-Dichlorobenzene	ND		ug/m³	0.601	1	EPA TO-15	12/19/2024 10:00	12/19/2024 23:14	YR
							Certifications:	NELAC-NY12058,NJDEP-NY037		
142-28-9	* 1,3-Dichloropropane	ND		ug/m³	0.462	1	EPA TO-15	12/19/2024 10:00	12/19/2024 23:14	YR
							Certifications:			
106-46-7	1,4-Dichlorobenzene	ND		ug/m³	0.601	1	EPA TO-15	12/19/2024 10:00	12/19/2024 23:14	YR
							Certifications:	NELAC-NY12058,NJDEP-NY037		
123-91-1	1,4-Dioxane	ND		ug/m³	0.721	1	EPA TO-15	12/19/2024 10:00	12/19/2024 23:14	YR
							Certifications:	NELAC-NY12058,NJDEP-NY037		
540-84-1	* 2,2,4-Trimethylpentane	ND		ug/m³	0.234	1	EPA TO-15	12/19/2024 10:00	12/19/2024 23:14	YR
							Certifications:			
78-93-3	2-Butanone	ND		ug/m³	0.295	1	EPA TO-15	12/19/2024 10:00	12/19/2024 23:14	YR
							Certifications:	NELAC-NY12058,NJDEP-NY037		

Sample Information

Client Sample ID: CAN 48292 / FC 21031 **York Sample ID:** 24L1337-08

York Project (SDG) No.	Client Project ID	Matrix	Collection Date/Time	Date Received
24L1337	170361307	Air	December 18, 2024 3:00 pm	12/19/2024

VOA, TO15 MASTER **Log-in Notes:** **Sample Notes:**

Sample Prepared by Method: EPA TO15 PREP

CAS No.	Parameter	Result	Flag	Units	Reported to LOQ	Dilution	Reference Method	Date/Time Prepared	Date/Time Analyzed	Analyst
591-78-6	* 2-Hexanone	ND		ug/m³	0.819	1	EPA TO-15	12/19/2024 10:00	12/19/2024 23:14	YR
							Certifications:			
107-05-1	3-Chloropropene	ND		ug/m³	1.57	1	EPA TO-15	12/19/2024 10:00	12/19/2024 23:14	YR
							Certifications:	NELAC-NY12058,NJDEP-NY037		
108-10-1	4-Methyl-2-pentanone	ND		ug/m³	0.410	1	EPA TO-15	12/19/2024 10:00	12/19/2024 23:14	YR
							Certifications:	NELAC-NY12058,NJDEP-NY037		
67-64-1	Acetone	ND		ug/m³	1.90	1	EPA TO-15	12/19/2024 10:00	12/19/2024 23:14	YR
							Certifications:	NELAC-NY12058,NJDEP-NY037		
107-13-1	Acrylonitrile	ND		ug/m³	2.82	1	EPA TO-15	12/19/2024 10:00	12/19/2024 23:14	YR
							Certifications:	NELAC-NY12058,NJDEP-NY037		
71-43-2	Benzene	ND		ug/m³	0.319	1	EPA TO-15	12/19/2024 10:00	12/19/2024 23:14	YR
							Certifications:	NELAC-NY12058,NJDEP-NY037		
100-44-7	Benzyl chloride	ND		ug/m³	0.518	1	EPA TO-15	12/19/2024 10:00	12/19/2024 23:14	YR
							Certifications:	NELAC-NY12058,NJDEP-NY037		
75-27-4	Bromodichloromethane	ND		ug/m³	0.670	1	EPA TO-15	12/19/2024 10:00	12/19/2024 23:14	YR
							Certifications:	NELAC-NY12058,NJDEP-NY037		
75-25-2	Bromoform	ND		ug/m³	1.03	1	EPA TO-15	12/19/2024 10:00	12/19/2024 23:14	YR
							Certifications:	NELAC-NY12058,NJDEP-NY037		
74-83-9	Bromomethane	ND		ug/m³	0.388	1	EPA TO-15	12/19/2024 10:00	12/19/2024 23:14	YR
							Certifications:	NELAC-NY12058,NJDEP-NY037		
75-15-0	Carbon disulfide	ND		ug/m³	0.311	1	EPA TO-15	12/19/2024 10:00	12/19/2024 23:14	YR
							Certifications:	NELAC-NY12058,NJDEP-NY037		
56-23-5	Carbon tetrachloride	ND		ug/m³	0.157	1	EPA TO-15	12/19/2024 10:00	12/19/2024 23:14	YR
							Certifications:	NELAC-NY12058,NJDEP-NY037		
108-90-7	Chlorobenzene	ND		ug/m³	0.460	1	EPA TO-15	12/19/2024 10:00	12/19/2024 23:14	YR
							Certifications:	NELAC-NY12058,NJDEP-NY037		
75-00-3	Chloroethane	ND		ug/m³	0.264	1	EPA TO-15	12/19/2024 10:00	12/19/2024 23:14	YR
							Certifications:	NELAC-NY12058,NJDEP-NY037		
67-66-3	Chloroform	ND		ug/m³	0.488	1	EPA TO-15	12/19/2024 10:00	12/19/2024 23:14	YR
							Certifications:	NELAC-NY12058,NJDEP-NY037		
74-87-3	Chloromethane	ND		ug/m³	0.207	1	EPA TO-15	12/19/2024 10:00	12/19/2024 23:14	YR
							Certifications:	NELAC-NY12058,NJDEP-NY037		
156-59-2	cis-1,2-Dichloroethylene	ND		ug/m³	0.198	1	EPA TO-15	12/19/2024 10:00	12/19/2024 23:14	YR
							Certifications:	NELAC-NY12058,NJDEP-NY037		
10061-01-5	cis-1,3-Dichloropropylene	ND		ug/m³	0.454	1	EPA TO-15	12/19/2024 10:00	12/19/2024 23:14	YR
							Certifications:	NELAC-NY12058,NJDEP-NY037		
110-82-7	Cyclohexane	ND		ug/m³	0.344	1	EPA TO-15	12/19/2024 10:00	12/19/2024 23:14	YR
							Certifications:	NELAC-NY12058,NJDEP-NY037		
124-48-1	Dibromochloromethane	ND		ug/m³	0.852	1	EPA TO-15	12/19/2024 10:00	12/19/2024 23:14	YR
							Certifications:	NELAC-NY12058,NJDEP-NY037		
75-71-8	Dichlorodifluoromethane	ND		ug/m³	0.495	1	EPA TO-15	12/19/2024 10:00	12/19/2024 23:14	YR
							Certifications:	NELAC-NY12058,NJDEP-NY037		
141-78-6	* Ethyl acetate	ND		ug/m³	0.721	1	EPA TO-15	12/19/2024 10:00	12/19/2024 23:14	YR
							Certifications:			

Sample Information

Client Sample ID: CAN 48292 / FC 21031 **York Sample ID:** 24L1337-08

York Project (SDG) No.	Client Project ID	Matrix	Collection Date/Time	Date Received
24L1337	170361307	Air	December 18, 2024 3:00 pm	12/19/2024

VOA, TO15 MASTER **Log-in Notes:** **Sample Notes:**

Sample Prepared by Method: EPA TO15 PREP

CAS No.	Parameter	Result	Flag	Units	Reported to LOQ	Dilution	Reference Method	Date/Time Prepared	Date/Time Analyzed	Analyst
100-41-4	Ethyl Benzene	ND		ug/m³	0.434	1	EPA TO-15	12/19/2024 10:00	12/19/2024 23:14	YR
							Certifications:	NELAC-NY12058,NJDEP-NY037		
87-68-3	Hexachlorobutadiene	ND		ug/m³	1.07	1	EPA TO-15	12/19/2024 10:00	12/19/2024 23:14	YR
							Certifications:	NELAC-NY12058,NJDEP-NY037		
67-63-0	Isopropanol	ND		ug/m³	1.47	1	EPA TO-15	12/19/2024 10:00	12/19/2024 23:14	YR
							Certifications:	NELAC-NY12058,NJDEP-NY037		
80-62-6	Methyl Methacrylate	ND		ug/m³	0.409	1	EPA TO-15	12/19/2024 10:00	12/19/2024 23:14	YR
							Certifications:	NELAC-NY12058,NJDEP-NY037		
1634-04-4	Methyl tert-butyl ether (MTBE)	ND		ug/m³	0.361	1	EPA TO-15	12/19/2024 10:00	12/19/2024 23:14	YR
							Certifications:	NELAC-NY12058,NJDEP-NY037		
75-09-2	Methylene chloride	ND		ug/m³	2.08	1	EPA TO-15	12/19/2024 10:00	12/19/2024 23:14	YR
							Certifications:	NELAC-NY12058,NJDEP-NY037		
91-20-3	* Naphthalene	ND		ug/m³	1.05	1	EPA TO-15	12/19/2024 10:00	12/19/2024 23:14	YR
							Certifications:	NJDEP-NY037		
142-82-5	n-Heptane	ND		ug/m³	0.410	1	EPA TO-15	12/19/2024 10:00	12/19/2024 23:14	YR
							Certifications:	NELAC-NY12058,NJDEP-NY037		
110-54-3	n-Hexane	ND		ug/m³	0.352	1	EPA TO-15	12/19/2024 10:00	12/19/2024 23:14	YR
							Certifications:	NELAC-NY12058,NJDEP-NY037		
95-47-6	o-Xylene	ND		ug/m³	0.434	1	EPA TO-15	12/19/2024 10:00	12/19/2024 23:14	YR
							Certifications:	NELAC-NY12058,NJDEP-NY037		
179601-23-1	p- & m- Xylenes	ND		ug/m³	0.868	1	EPA TO-15	12/19/2024 10:00	12/19/2024 23:14	YR
							Certifications:	NELAC-NY12058,NJDEP-NY037		
622-96-8	* p-Ethyltoluene	ND		ug/m³	0.492	1	EPA TO-15	12/19/2024 10:00	12/19/2024 23:14	YR
							Certifications:			
115-07-1	* Propylene	ND		ug/m³	0.172	1	EPA TO-15	12/19/2024 10:00	12/19/2024 23:14	YR
							Certifications:			
100-42-5	Styrene	ND		ug/m³	0.426	1	EPA TO-15	12/19/2024 10:00	12/19/2024 23:14	YR
							Certifications:	NELAC-NY12058,NJDEP-NY037		
127-18-4	Tetrachloroethylene	ND		ug/m³	0.678	1	EPA TO-15	12/19/2024 10:00	12/19/2024 23:14	YR
							Certifications:	NELAC-NY12058,NJDEP-NY037		
109-99-9	* Tetrahydrofuran	ND		ug/m³	0.590	1	EPA TO-15	12/19/2024 10:00	12/19/2024 23:14	YR
							Certifications:			
108-88-3	Toluene	ND		ug/m³	0.377	1	EPA TO-15	12/19/2024 10:00	12/19/2024 23:14	YR
							Certifications:	NELAC-NY12058,NJDEP-NY037		
156-60-5	trans-1,2-Dichloroethylene	ND		ug/m³	0.396	1	EPA TO-15	12/19/2024 10:00	12/19/2024 23:14	YR
							Certifications:	NELAC-NY12058,NJDEP-NY037		
10061-02-6	trans-1,3-Dichloropropylene	ND		ug/m³	0.454	1	EPA TO-15	12/19/2024 10:00	12/19/2024 23:14	YR
							Certifications:	NELAC-NY12058,NJDEP-NY037		
79-01-6	Trichloroethylene	ND		ug/m³	0.134	1	EPA TO-15	12/19/2024 10:00	12/19/2024 23:14	YR
							Certifications:	NELAC-NY12058,NJDEP-NY037		
75-69-4	Trichlorofluoromethane (Freon 11)	ND		ug/m³	0.562	1	EPA TO-15	12/19/2024 10:00	12/19/2024 23:14	YR
							Certifications:	NELAC-NY12058,NJDEP-NY037		
108-05-4	Vinyl acetate	ND		ug/m³	0.352	1	EPA TO-15	12/19/2024 10:00	12/19/2024 23:14	YR
							Certifications:	NELAC-NY12058,NJDEP-NY037		

Sample Information

Client Sample ID: **CAN 48292 / FC 21031** **York Sample ID:** **24L1337-08**

York Project (SDG) No.	Client Project ID	Matrix	Collection Date/Time	Date Received
24L1337	170361307	Air	December 18, 2024 3:00 pm	12/19/2024

VOA, TO15 MASTER

Log-in Notes:

Sample Notes:

Sample Prepared by Method: EPA TO15 PREP

CAS No.	Parameter	Result	Flag	Units	Reported to LOQ	Dilution	Reference Method	Date/Time Prepared	Date/Time Analyzed	Analyst
593-60-2	Vinyl bromide	ND		ug/m³	0.437	1	EPA TO-15	12/19/2024 10:00	12/19/2024 23:14	YR
							Certifications:	NELAC-NY12058,NJDEP-NY037		
75-01-4	Vinyl Chloride	ND		ug/m³	0.128	1	EPA TO-15	12/19/2024 10:00	12/19/2024 23:14	YR
							Certifications:	NELAC-NY12058,NJDEP-NY037		

Sample Information

Client Sample ID: FD01_122324 **York Sample ID:** 24L1600-01

York Project (SDG) No.	Client Project ID	Matrix	Collection Date/Time	Date Received
24L1600	170361307	Indoor Ambient Air	December 23, 2024 12:00 pm	12/23/2024

VOA, TO15 MASTER

Log-in Notes:

Sample Notes:

Sample Prepared by Method: EPA TO15 PREP

CAS No.	Parameter	Result	Flag	Units	Reported to LOQ	Dilution	Reference Method	Date/Time Prepared	Date/Time Analyzed	Analyst
630-20-6	* 1,1,1,2-Tetrachloroethane	ND		ug/m³	0.520	0.758	EPA TO-15 Certifications:	12/31/2024 13:52	01/01/2025 03:40	YR
71-55-6	1,1,1-Trichloroethane	ND		ug/m³	0.414	0.758	EPA TO-15 Certifications:	12/31/2024 13:52 NELAC-NY12058,NJDEP-NY037	01/01/2025 03:40	YR
79-34-5	1,1,2,2-Tetrachloroethane	ND		ug/m³	0.520	0.758	EPA TO-15 Certifications:	12/31/2024 13:52 NELAC-NY12058,NJDEP-NY037	01/01/2025 03:40	YR
76-13-1	1,1,2-Trichloro-1,2,2-trifluoroethane (Freon 113)	ND		ug/m³	0.581	0.758	EPA TO-15 Certifications:	12/31/2024 13:52 NELAC-NY12058,NJDEP-NY037	01/01/2025 03:40	YR
79-00-5	1,1,2-Trichloroethane	ND		ug/m³	0.414	0.758	EPA TO-15 Certifications:	12/31/2024 13:52 NELAC-NY12058,NJDEP-NY037	01/01/2025 03:40	YR
75-34-3	1,1-Dichloroethane	ND		ug/m³	0.307	0.758	EPA TO-15 Certifications:	12/31/2024 13:52 NELAC-NY12058,NJDEP-NY037	01/01/2025 03:40	YR
75-35-4	1,1-Dichloroethylene	ND		ug/m³	0.150	0.758	EPA TO-15 Certifications:	12/31/2024 13:52 NELAC-NY12058,NJDEP-NY037	01/01/2025 03:40	YR
120-82-1	1,2,4-Trichlorobenzene	ND		ug/m³	0.563	0.758	EPA TO-15 Certifications:	12/31/2024 13:52 NELAC-NY12058,NJDEP-NY037	01/01/2025 03:40	YR
95-63-6	**1,2,4-Trimethylbenzene**	**0.559**		ug/m³	0.373	0.758	EPA TO-15 Certifications:	12/31/2024 13:52 NELAC-NY12058,NJDEP-NY037	01/01/2025 03:40	YR
106-93-4	1,2-Dibromoethane	ND		ug/m³	0.582	0.758	EPA TO-15 Certifications:	12/31/2024 13:52 NELAC-NY12058,NJDEP-NY037	01/01/2025 03:40	YR
95-50-1	1,2-Dichlorobenzene	ND		ug/m³	0.456	0.758	EPA TO-15 Certifications:	12/31/2024 13:52 NELAC-NY12058,NJDEP-NY037	01/01/2025 03:40	YR
107-06-2	1,2-Dichloroethane	ND	TO-CCV, TO-LCS-L	ug/m³	0.307	0.758	EPA TO-15 Certifications:	12/31/2024 13:52 NELAC-NY12058,NJDEP-NY037	01/01/2025 03:40	YR
78-87-5	1,2-Dichloropropane	ND		ug/m³	0.350	0.758	EPA TO-15 Certifications:	12/31/2024 13:52 NELAC-NY12058,NJDEP-NY037	01/01/2025 03:40	YR
76-14-2	1,2-Dichlorotetrafluoroethane	ND		ug/m³	0.530	0.758	EPA TO-15 Certifications:	12/31/2024 13:52 NELAC-NY12058,NJDEP-NY037	01/01/2025 03:40	YR
108-67-8	1,3,5-Trimethylbenzene	ND		ug/m³	0.373	0.758	EPA TO-15 Certifications:	12/31/2024 13:52 NELAC-NY12058,NJDEP-NY037	01/01/2025 03:40	YR
106-99-0	1,3-Butadiene	ND		ug/m³	0.503	0.758	EPA TO-15 Certifications:	12/31/2024 13:52 NELAC-NY12058,NJDEP-NY037	01/01/2025 03:40	YR
541-73-1	1,3-Dichlorobenzene	ND		ug/m³	0.456	0.758	EPA TO-15 Certifications:	12/31/2024 13:52 NELAC-NY12058,NJDEP-NY037	01/01/2025 03:40	YR
142-28-9	* 1,3-Dichloropropane	ND		ug/m³	0.350	0.758	EPA TO-15 Certifications:	12/31/2024 13:52	01/01/2025 03:40	YR
106-46-7	1,4-Dichlorobenzene	ND		ug/m³	0.456	0.758	EPA TO-15 Certifications:	12/31/2024 13:52 NELAC-NY12058,NJDEP-NY037	01/01/2025 03:40	YR
123-91-1	1,4-Dioxane	ND		ug/m³	1.09	0.758	EPA TO-15 Certifications:	12/31/2024 13:52 NELAC-NY12058,NJDEP-NY037	01/01/2025 03:40	YR
540-84-1	* **2,2,4-Trimethylpentane**	**0.779**		ug/m³	0.177	0.758	EPA TO-15 Certifications:	12/31/2024 13:52	01/01/2025 03:40	YR

Sample Information

Client Sample ID: FD01_122324 **York Sample ID:** 24L1600-01

York Project (SDG) No.	Client Project ID	Matrix	Collection Date/Time	Date Received
24L1600	170361307	Indoor Ambient Air	December 23, 2024 12:00 pm	12/23/2024

VOA, TO15 MASTER

Log-in Notes:

Sample Notes:

Sample Prepared by Method: EPA TO15 PREP

CAS No.	Parameter	Result	Flag	Units	Reported to LOQ	Dilution	Reference Method	Date/Time Prepared	Date/Time Analyzed	Analyst
78-93-3	**2-Butanone**	**2.50**		ug/m³	0.224	0.758	EPA TO-15	12/31/2024 13:52	01/01/2025 03:40	YR
							Certifications: NELAC-NY12058,NJDEP-NY037			
591-78-6	*** 2-Hexanone**	**0.745**		ug/m³	0.621	0.758	EPA TO-15	12/31/2024 13:52	01/01/2025 03:40	YR
							Certifications:			
107-05-1	3-Chloropropene	ND		ug/m³	1.19	0.758	EPA TO-15	12/31/2024 13:52	01/01/2025 03:40	YR
							Certifications: NELAC-NY12058,NJDEP-NY037			
108-10-1	**4-Methyl-2-pentanone**	**0.528**		ug/m³	0.311	0.758	EPA TO-15	12/31/2024 13:52	01/01/2025 03:40	YR
							Certifications: NELAC-NY12058,NJDEP-NY037			
67-64-1	**Acetone**	**36.2**		ug/m³	1.44	0.758	EPA TO-15	12/31/2024 13:52	01/01/2025 03:40	YR
							Certifications: NELAC-NY12058,NJDEP-NY037			
107-13-1	Acrylonitrile	ND		ug/m³	2.14	0.758	EPA TO-15	12/31/2024 13:52	01/01/2025 03:40	YR
							Certifications: NELAC-NY12058,NJDEP-NY037			
71-43-2	**Benzene**	**0.799**		ug/m³	0.242	0.758	EPA TO-15	12/31/2024 13:52	01/01/2025 03:40	YR
							Certifications: NELAC-NY12058,NJDEP-NY037			
100-44-7	Benzyl chloride	ND		ug/m³	0.392	0.758	EPA TO-15	12/31/2024 13:52	01/01/2025 03:40	YR
							Certifications: NELAC-NY12058,NJDEP-NY037			
75-27-4	Bromodichloromethane	ND		ug/m³	0.508	0.758	EPA TO-15	12/31/2024 13:52	01/01/2025 03:40	YR
							Certifications: NELAC-NY12058,NJDEP-NY037			
75-25-2	Bromoform	ND	TO-CCV	ug/m³	0.784	0.758	EPA TO-15	12/31/2024 13:52	01/01/2025 03:40	YR
							Certifications: NELAC-NY12058,NJDEP-NY037			
74-83-9	Bromomethane	ND		ug/m³	0.294	0.758	EPA TO-15	12/31/2024 13:52	01/01/2025 03:40	YR
							Certifications: NELAC-NY12058,NJDEP-NY037			
75-15-0	Carbon disulfide	ND		ug/m³	0.236	0.758	EPA TO-15	12/31/2024 13:52	01/01/2025 03:40	YR
							Certifications: NELAC-NY12058,NJDEP-NY037			
56-23-5	**Carbon tetrachloride**	**0.334**		ug/m³	0.119	0.758	EPA TO-15	12/31/2024 13:52	01/01/2025 03:40	YR
							Certifications: NELAC-NY12058,NJDEP-NY037			
108-90-7	Chlorobenzene	ND		ug/m³	0.349	0.758	EPA TO-15	12/31/2024 13:52	01/01/2025 03:40	YR
							Certifications: NELAC-NY12058,NJDEP-NY037			
75-00-3	Chloroethane	ND		ug/m³	0.200	0.758	EPA TO-15	12/31/2024 13:52	01/01/2025 03:40	YR
							Certifications: NELAC-NY12058,NJDEP-NY037			
67-66-3	Chloroform	ND		ug/m³	0.370	0.758	EPA TO-15	12/31/2024 13:52	01/01/2025 03:40	YR
							Certifications: NELAC-NY12058,NJDEP-NY037			
74-87-3	**Chloromethane**	**1.13**		ug/m³	0.157	0.758	EPA TO-15	12/31/2024 13:52	01/01/2025 03:40	YR
							Certifications: NELAC-NY12058,NJDEP-NY037			
156-59-2	cis-1,2-Dichloroethylene	ND		ug/m³	0.150	0.758	EPA TO-15	12/31/2024 13:52	01/01/2025 03:40	YR
							Certifications: NELAC-NY12058,NJDEP-NY037			
10061-01-5	cis-1,3-Dichloropropylene	ND		ug/m³	0.344	0.758	EPA TO-15	12/31/2024 13:52	01/01/2025 03:40	YR
							Certifications: NELAC-NY12058,NJDEP-NY037			
110-82-7	**Cyclohexane**	**0.287**		ug/m³	0.261	0.758	EPA TO-15	12/31/2024 13:52	01/01/2025 03:40	YR
							Certifications: NELAC-NY12058,NJDEP-NY037			
124-48-1	Dibromochloromethane	ND		ug/m³	0.646	0.758	EPA TO-15	12/31/2024 13:52	01/01/2025 03:40	YR
							Certifications: NELAC-NY12058,NJDEP-NY037			
75-71-8	**Dichlorodifluoromethane**	**2.40**		ug/m³	0.375	0.758	EPA TO-15	12/31/2024 13:52	01/01/2025 03:40	YR
							Certifications: NELAC-NY12058,NJDEP-NY037			

Sample Information

Client Sample ID: FD01_122324 **York Sample ID:** 24L1600-01

York Project (SDG) No.	Client Project ID	Matrix	Collection Date/Time	Date Received
24L1600	170361307	Indoor Ambient Air	December 23, 2024 12:00 pm	12/23/2024

VOA, TO15 MASTER

Log-in Notes:

Sample Notes:

Sample Prepared by Method: EPA TO15 PREP

CAS No.	Parameter	Result	Flag	Units	Reported to LOQ	Dilution	Reference Method	Date/Time Prepared	Date/Time Analyzed	Analyst
141-78-6	*** Ethyl acetate**	**1.12**		ug/m³	0.546	0.758	EPA TO-15	12/31/2024 13:52	01/01/2025 03:40	YR
							Certifications:			
100-41-4	**Ethyl Benzene**	**1.09**		ug/m³	0.329	0.758	EPA TO-15	12/31/2024 13:52	01/01/2025 03:40	YR
							Certifications:	NELAC-NY12058,NJDEP-NY037		
87-68-3	Hexachlorobutadiene	ND		ug/m³	0.808	0.758	EPA TO-15	12/31/2024 13:52	01/01/2025 03:40	YR
							Certifications:	NELAC-NY12058,NJDEP-NY037		
67-63-0	**Isopropanol**	**188**	E, TO-IPA	ug/m³	1.12	0.758	EPA TO-15	12/31/2024 13:52	01/01/2025 03:40	YR
							Certifications:	NELAC-NY12058,NJDEP-NY037		
80-62-6	**Methyl Methacrylate**	**0.497**		ug/m³	0.310	0.758	EPA TO-15	12/31/2024 13:52	01/01/2025 03:40	YR
							Certifications:	NELAC-NY12058,NJDEP-NY037		
1634-04-4	Methyl tert-butyl ether (MTBE)	ND		ug/m³	0.273	0.758	EPA TO-15	12/31/2024 13:52	01/01/2025 03:40	YR
							Certifications:	NELAC-NY12058,NJDEP-NY037		
75-09-2	Methylene chloride	ND		ug/m³	1.58	0.758	EPA TO-15	12/31/2024 13:52	01/01/2025 03:40	YR
							Certifications:	NELAC-NY12058,NJDEP-NY037		
91-20-3	* Naphthalene	ND		ug/m³	0.795	0.758	EPA TO-15	12/31/2024 13:52	01/01/2025 03:40	YR
							Certifications:	NJDEP-NY037		
142-82-5	**n-Heptane**	**0.590**		ug/m³	0.311	0.758	EPA TO-15	12/31/2024 13:52	01/01/2025 03:40	YR
							Certifications:	NELAC-NY12058,NJDEP-NY037		
110-54-3	**n-Hexane**	**1.39**		ug/m³	0.267	0.758	EPA TO-15	12/31/2024 13:52	01/01/2025 03:40	YR
							Certifications:	NELAC-NY12058,NJDEP-NY037		
95-47-6	**o-Xylene**	**1.38**		ug/m³	0.329	0.758	EPA TO-15	12/31/2024 13:52	01/01/2025 03:40	YR
							Certifications:	NELAC-NY12058,NJDEP-NY037		
179601-23-1	**p- & m- Xylenes**	**4.25**		ug/m³	0.658	0.758	EPA TO-15	12/31/2024 13:52	01/01/2025 03:40	YR
							Certifications:	NELAC-NY12058,NJDEP-NY037		
622-96-8	*** p-Ethyltoluene**	**0.484**		ug/m³	0.373	0.758	EPA TO-15	12/31/2024 13:52	01/01/2025 03:40	YR
							Certifications:			
115-07-1	*** Propylene**	**1.81**		ug/m³	0.130	0.758	EPA TO-15	12/31/2024 13:52	01/01/2025 03:40	YR
							Certifications:			
100-42-5	Styrene	ND		ug/m³	0.323	0.758	EPA TO-15	12/31/2024 13:52	01/01/2025 03:40	YR
							Certifications:	NELAC-NY12058,NJDEP-NY037		
127-18-4	**Tetrachloroethylene**	**0.823**		ug/m³	0.514	0.758	EPA TO-15	12/31/2024 13:52	01/01/2025 03:40	YR
							Certifications:	NELAC-NY12058,NJDEP-NY037		
109-99-9	* Tetrahydrofuran	ND		ug/m³	0.447	0.758	EPA TO-15	12/31/2024 13:52	01/01/2025 03:40	YR
							Certifications:			
108-88-3	**Toluene**	**6.80**		ug/m³	0.286	0.758	EPA TO-15	12/31/2024 13:52	01/01/2025 03:40	YR
							Certifications:	NELAC-NY12058,NJDEP-NY037		
156-60-5	trans-1,2-Dichloroethylene	ND		ug/m³	0.301	0.758	EPA TO-15	12/31/2024 13:52	01/01/2025 03:40	YR
							Certifications:	NELAC-NY12058,NJDEP-NY037		
10061-02-6	trans-1,3-Dichloropropylene	ND		ug/m³	0.344	0.758	EPA TO-15	12/31/2024 13:52	01/01/2025 03:40	YR
							Certifications:	NELAC-NY12058,NJDEP-NY037		
79-01-6	**Trichloroethylene**	**0.204**		ug/m³	0.102	0.758	EPA TO-15	12/31/2024 13:52	01/01/2025 03:40	YR
							Certifications:	NELAC-NY12058,NJDEP-NY037		
75-69-4	**Trichlorofluoromethane (Freon 11)**	**1.15**		ug/m³	0.426	0.758	EPA TO-15	12/31/2024 13:52	01/01/2025 03:40	YR
							Certifications:	NELAC-NY12058,NJDEP-NY037		

Sample Information

Client Sample ID: FD01_122324 **York Sample ID:** 24L1600-01

York Project (SDG) No.	Client Project ID	Matrix	Collection Date/Time	Date Received
24L1600	170361307	Indoor Ambient Air	December 23, 2024 12:00 pm	12/23/2024

VOA, TO15 MASTER **Log-in Notes:** **Sample Notes:**

Sample Prepared by Method: EPA TO15 PREP

CAS No.	Parameter	Result	Flag	Units	Reported to LOQ	Dilution	Reference Method	Date/Time Prepared	Date/Time Analyzed	Analyst
108-05-4	Vinyl acetate	ND	TO-LC S-L	ug/m³	0.267	0.758	EPA TO-15	12/31/2024 13:52	01/01/2025 03:40	YR
							Certifications:	NELAC-NY12058,NJDEP-NY037		
593-60-2	Vinyl bromide	ND		ug/m³	0.332	0.758	EPA TO-15	12/31/2024 13:52	01/01/2025 03:40	YR
							Certifications:	NELAC-NY12058,NJDEP-NY037		
75-01-4	Vinyl Chloride	ND		ug/m³	0.0969	0.758	EPA TO-15	12/31/2024 13:52	01/01/2025 03:40	YR
							Certifications:	NELAC-NY12058,NJDEP-NY037		

Sample Information

Client Sample ID: FD02_122324 **York Sample ID:** 24L1600-02

York Project (SDG) No.	Client Project ID	Matrix	Collection Date/Time	Date Received
24L1600	170361307	Indoor Ambient Air	December 23, 2024 12:01 pm	12/23/2024

VOA, TO15 MASTER

Log-in Notes:

Sample Notes:

Sample Prepared by Method: EPA TO15 PREP

CAS No.	Parameter	Result	Flag	Units	Reported to LOQ	Dilution	Reference Method	Date/Time Prepared	Date/Time Analyzed	Analyst
630-20-6	* 1,1,1,2-Tetrachloroethane	ND		ug/m³	0.558	0.813	EPA TO-15 Certifications:	12/31/2024 13:52	01/01/2025 04:25	YR
71-55-6	1,1,1-Trichloroethane	ND		ug/m³	0.444	0.813	EPA TO-15 Certifications: NELAC-NY12058,NJDEP-NY037	12/31/2024 13:52	01/01/2025 04:25	YR
79-34-5	1,1,2,2-Tetrachloroethane	ND		ug/m³	0.558	0.813	EPA TO-15 Certifications: NELAC-NY12058,NJDEP-NY037	12/31/2024 13:52	01/01/2025 04:25	YR
76-13-1	1,1,2-Trichloro-1,2,2-trifluoroethane (Freon 113)	ND		ug/m³	0.623	0.813	EPA TO-15 Certifications: NELAC-NY12058,NJDEP-NY037	12/31/2024 13:52	01/01/2025 04:25	YR
79-00-5	1,1,2-Trichloroethane	ND		ug/m³	0.444	0.813	EPA TO-15 Certifications: NELAC-NY12058,NJDEP-NY037	12/31/2024 13:52	01/01/2025 04:25	YR
75-34-3	1,1-Dichloroethane	ND		ug/m³	0.329	0.813	EPA TO-15 Certifications: NELAC-NY12058,NJDEP-NY037	12/31/2024 13:52	01/01/2025 04:25	YR
75-35-4	1,1-Dichloroethylene	ND		ug/m³	0.161	0.813	EPA TO-15 Certifications: NELAC-NY12058,NJDEP-NY037	12/31/2024 13:52	01/01/2025 04:25	YR
120-82-1	1,2,4-Trichlorobenzene	ND		ug/m³	0.603	0.813	EPA TO-15 Certifications: NELAC-NY12058,NJDEP-NY037	12/31/2024 13:52	01/01/2025 04:25	YR
95-63-6	**1,2,4-Trimethylbenzene**	**0.879**		ug/m³	0.400	0.813	EPA TO-15 Certifications: NELAC-NY12058,NJDEP-NY037	12/31/2024 13:52	01/01/2025 04:25	YR
106-93-4	1,2-Dibromoethane	ND		ug/m³	0.625	0.813	EPA TO-15 Certifications: NELAC-NY12058,NJDEP-NY037	12/31/2024 13:52	01/01/2025 04:25	YR
95-50-1	1,2-Dichlorobenzene	ND		ug/m³	0.489	0.813	EPA TO-15 Certifications: NELAC-NY12058,NJDEP-NY037	12/31/2024 13:52	01/01/2025 04:25	YR
107-06-2	1,2-Dichloroethane	ND	TO-CCV, TO-LCS-L	ug/m³	0.329	0.813	EPA TO-15 Certifications: NELAC-NY12058,NJDEP-NY037	12/31/2024 13:52	01/01/2025 04:25	YR
78-87-5	1,2-Dichloropropane	ND		ug/m³	0.376	0.813	EPA TO-15 Certifications: NELAC-NY12058,NJDEP-NY037	12/31/2024 13:52	01/01/2025 04:25	YR
76-14-2	1,2-Dichlorotetrafluoroethane	ND		ug/m³	0.568	0.813	EPA TO-15 Certifications: NELAC-NY12058,NJDEP-NY037	12/31/2024 13:52	01/01/2025 04:25	YR
108-67-8	1,3,5-Trimethylbenzene	ND		ug/m³	0.400	0.813	EPA TO-15 Certifications: NELAC-NY12058,NJDEP-NY037	12/31/2024 13:52	01/01/2025 04:25	YR
106-99-0	1,3-Butadiene	ND		ug/m³	0.540	0.813	EPA TO-15 Certifications: NELAC-NY12058,NJDEP-NY037	12/31/2024 13:52	01/01/2025 04:25	YR
541-73-1	1,3-Dichlorobenzene	ND		ug/m³	0.489	0.813	EPA TO-15 Certifications: NELAC-NY12058,NJDEP-NY037	12/31/2024 13:52	01/01/2025 04:25	YR
142-28-9	* 1,3-Dichloropropane	ND		ug/m³	0.376	0.813	EPA TO-15 Certifications:	12/31/2024 13:52	01/01/2025 04:25	YR
106-46-7	1,4-Dichlorobenzene	ND		ug/m³	0.489	0.813	EPA TO-15 Certifications: NELAC-NY12058,NJDEP-NY037	12/31/2024 13:52	01/01/2025 04:25	YR
123-91-1	1,4-Dioxane	ND		ug/m³	1.17	0.813	EPA TO-15 Certifications: NELAC-NY12058,NJDEP-NY037	12/31/2024 13:52	01/01/2025 04:25	YR
540-84-1	* **2,2,4-Trimethylpentane**	**1.14**		ug/m³	0.190	0.813	EPA TO-15 Certifications:	12/31/2024 13:52	01/01/2025 04:25	YR

Sample Information

Client Sample ID: FD02_122324 **York Sample ID:** 24L1600-02

York Project (SDG) No.	Client Project ID	Matrix	Collection Date/Time	Date Received
24L1600	170361307	Indoor Ambient Air	December 23, 2024 12:01 pm	12/23/2024

VOA, TO15 MASTER **Log-in Notes:** **Sample Notes:**

Sample Prepared by Method: EPA TO15 PREP

CAS No.	Parameter	Result	Flag	Units	Reported to LOQ	Dilution	Reference Method	Date/Time Prepared	Date/Time Analyzed	Analyst
78-93-3	**2-Butanone**	**25.7**		ug/m³	0.240	0.813	EPA TO-15	12/31/2024 13:52	01/01/2025 04:25	YR
							Certifications: NELAC-NY12058,NJDEP-NY037			
591-78-6	*** 2-Hexanone**	**0.966**		ug/m³	0.666	0.813	EPA TO-15	12/31/2024 13:52	01/01/2025 04:25	YR
							Certifications:			
107-05-1	3-Chloropropene	ND		ug/m³	1.27	0.813	EPA TO-15	12/31/2024 13:52	01/01/2025 04:25	YR
							Certifications: NELAC-NY12058,NJDEP-NY037			
108-10-1	**4-Methyl-2-pentanone**	**0.899**		ug/m³	0.333	0.813	EPA TO-15	12/31/2024 13:52	01/01/2025 04:25	YR
							Certifications: NELAC-NY12058,NJDEP-NY037			
67-64-1	**Acetone**	**107**		ug/m³	2.90	1.526	EPA TO-15	01/02/2025 06:52	01/02/2025 16:03	YR
							Certifications: NELAC-NY12058,NJDEP-NY037			
107-13-1	Acrylonitrile	ND		ug/m³	2.29	0.813	EPA TO-15	12/31/2024 13:52	01/01/2025 04:25	YR
							Certifications: NELAC-NY12058,NJDEP-NY037			
71-43-2	**Benzene**	**1.74**		ug/m³	0.260	0.813	EPA TO-15	12/31/2024 13:52	01/01/2025 04:25	YR
							Certifications: NELAC-NY12058,NJDEP-NY037			
100-44-7	Benzyl chloride	ND		ug/m³	0.421	0.813	EPA TO-15	12/31/2024 13:52	01/01/2025 04:25	YR
							Certifications: NELAC-NY12058,NJDEP-NY037			
75-27-4	Bromodichloromethane	ND		ug/m³	0.545	0.813	EPA TO-15	12/31/2024 13:52	01/01/2025 04:25	YR
							Certifications: NELAC-NY12058,NJDEP-NY037			
75-25-2	Bromoform	ND	TO-CCV	ug/m³	0.840	0.813	EPA TO-15	12/31/2024 13:52	01/01/2025 04:25	YR
							Certifications: NELAC-NY12058,NJDEP-NY037			
74-83-9	Bromomethane	ND		ug/m³	0.316	0.813	EPA TO-15	12/31/2024 13:52	01/01/2025 04:25	YR
							Certifications: NELAC-NY12058,NJDEP-NY037			
75-15-0	**Carbon disulfide**	**1.37**		ug/m³	0.253	0.813	EPA TO-15	12/31/2024 13:52	01/01/2025 04:25	YR
							Certifications: NELAC-NY12058,NJDEP-NY037			
56-23-5	**Carbon tetrachloride**	**0.511**		ug/m³	0.128	0.813	EPA TO-15	12/31/2024 13:52	01/01/2025 04:25	YR
							Certifications: NELAC-NY12058,NJDEP-NY037			
108-90-7	Chlorobenzene	ND		ug/m³	0.374	0.813	EPA TO-15	12/31/2024 13:52	01/01/2025 04:25	YR
							Certifications: NELAC-NY12058,NJDEP-NY037			
75-00-3	**Chloroethane**	**0.837**		ug/m³	0.215	0.813	EPA TO-15	12/31/2024 13:52	01/01/2025 04:25	YR
							Certifications: NELAC-NY12058,NJDEP-NY037			
67-66-3	**Chloroform**	**7.90**		ug/m³	0.397	0.813	EPA TO-15	12/31/2024 13:52	01/01/2025 04:25	YR
							Certifications: NELAC-NY12058,NJDEP-NY037			
74-87-3	**Chloromethane**	**1.61**		ug/m³	0.168	0.813	EPA TO-15	12/31/2024 13:52	01/01/2025 04:25	YR
							Certifications: NELAC-NY12058,NJDEP-NY037			
156-59-2	cis-1,2-Dichloroethylene	ND		ug/m³	0.161	0.813	EPA TO-15	12/31/2024 13:52	01/01/2025 04:25	YR
							Certifications: NELAC-NY12058,NJDEP-NY037			
10061-01-5	cis-1,3-Dichloropropylene	ND		ug/m³	0.369	0.813	EPA TO-15	12/31/2024 13:52	01/01/2025 04:25	YR
							Certifications: NELAC-NY12058,NJDEP-NY037			
110-82-7	**Cyclohexane**	**0.420**		ug/m³	0.280	0.813	EPA TO-15	12/31/2024 13:52	01/01/2025 04:25	YR
							Certifications: NELAC-NY12058,NJDEP-NY037			
124-48-1	Dibromochloromethane	ND		ug/m³	0.693	0.813	EPA TO-15	12/31/2024 13:52	01/01/2025 04:25	YR
							Certifications: NELAC-NY12058,NJDEP-NY037			
75-71-8	**Dichlorodifluoromethane**	**2.57**		ug/m³	0.402	0.813	EPA TO-15	12/31/2024 13:52	01/01/2025 04:25	YR
							Certifications: NELAC-NY12058,NJDEP-NY037			

Sample Information

Client Sample ID: FD02_122324 **York Sample ID:** 24L1600-02

York Project (SDG) No.	Client Project ID	Matrix	Collection Date/Time	Date Received
24L1600	170361307	Indoor Ambient Air	December 23, 2024 12:01 pm	12/23/2024

VOA, TO15 MASTER **Log-in Notes:** **Sample Notes:**

Sample Prepared by Method: EPA TO15 PREP

CAS No.	Parameter	Result	Flag	Units	Reported to LOQ	Dilution	Reference Method	Date/Time Prepared	Date/Time Analyzed	Analyst
141-78-6	* **Ethyl acetate**	**4.98**		ug/m³	0.586	0.813	EPA TO-15	12/31/2024 13:52	01/01/2025 04:25	YR
							Certifications:			
100-41-4	**Ethyl Benzene**	**1.48**		ug/m³	0.353	0.813	EPA TO-15	12/31/2024 13:52	01/01/2025 04:25	YR
							Certifications:	NELAC-NY12058,NJDEP-NY037		
87-68-3	Hexachlorobutadiene	ND		ug/m³	0.867	0.813	EPA TO-15	12/31/2024 13:52	01/01/2025 04:25	YR
							Certifications:	NELAC-NY12058,NJDEP-NY037		
67-63-0	**Isopropanol**	**302**	E, TO-IPA	ug/m³	1.20	0.813	EPA TO-15	12/31/2024 13:52	01/01/2025 04:25	YR
							Certifications:	NELAC-NY12058,NJDEP-NY037		
80-62-6	**Methyl Methacrylate**	**0.732**		ug/m³	0.333	0.813	EPA TO-15	12/31/2024 13:52	01/01/2025 04:25	YR
							Certifications:	NELAC-NY12058,NJDEP-NY037		
1634-04-4	Methyl tert-butyl ether (MTBE)	ND		ug/m³	0.293	0.813	EPA TO-15	12/31/2024 13:52	01/01/2025 04:25	YR
							Certifications:	NELAC-NY12058,NJDEP-NY037		
75-09-2	Methylene chloride	ND		ug/m³	1.69	0.813	EPA TO-15	12/31/2024 13:52	01/01/2025 04:25	YR
							Certifications:	NELAC-NY12058,NJDEP-NY037		
91-20-3	* **Naphthalene**	**0.980**	TO-CCV	ug/m³	0.852	0.813	EPA TO-15	12/31/2024 13:52	01/01/2025 04:25	YR
							Certifications:	NJDEP-NY037		
142-82-5	**n-Heptane**	**7.73**		ug/m³	0.333	0.813	EPA TO-15	12/31/2024 13:52	01/01/2025 04:25	YR
							Certifications:	NELAC-NY12058,NJDEP-NY037		
110-54-3	**n-Hexane**	**6.42**		ug/m³	0.287	0.813	EPA TO-15	12/31/2024 13:52	01/01/2025 04:25	YR
							Certifications:	NELAC-NY12058,NJDEP-NY037		
95-47-6	**o-Xylene**	**1.94**		ug/m³	0.353	0.813	EPA TO-15	12/31/2024 13:52	01/01/2025 04:25	YR
							Certifications:	NELAC-NY12058,NJDEP-NY037		
179601-23-1	**p- & m- Xylenes**	**5.90**		ug/m³	0.706	0.813	EPA TO-15	12/31/2024 13:52	01/01/2025 04:25	YR
							Certifications:	NELAC-NY12058,NJDEP-NY037		
622-96-8	* **p-Ethyltoluene**	**0.719**		ug/m³	0.400	0.813	EPA TO-15	12/31/2024 13:52	01/01/2025 04:25	YR
							Certifications:			
115-07-1	* **Propylene**	**3.69**		ug/m³	0.140	0.813	EPA TO-15	12/31/2024 13:52	01/01/2025 04:25	YR
							Certifications:			
100-42-5	**Styrene**	**0.346**		ug/m³	0.346	0.813	EPA TO-15	12/31/2024 13:52	01/01/2025 04:25	YR
							Certifications:	NELAC-NY12058,NJDEP-NY037		
127-18-4	**Tetrachloroethylene**	**0.827**		ug/m³	0.551	0.813	EPA TO-15	12/31/2024 13:52	01/01/2025 04:25	YR
							Certifications:	NELAC-NY12058,NJDEP-NY037		
109-99-9	* **Tetrahydrofuran**	**0.767**		ug/m³	0.480	0.813	EPA TO-15	12/31/2024 13:52	01/01/2025 04:25	YR
							Certifications:			
108-88-3	**Toluene**	**8.39**		ug/m³	0.306	0.813	EPA TO-15	12/31/2024 13:52	01/01/2025 04:25	YR
							Certifications:	NELAC-NY12058,NJDEP-NY037		
156-60-5	trans-1,2-Dichloroethylene	ND		ug/m³	0.322	0.813	EPA TO-15	12/31/2024 13:52	01/01/2025 04:25	YR
							Certifications:	NELAC-NY12058,NJDEP-NY037		
10061-02-6	trans-1,3-Dichloropropylene	ND		ug/m³	0.369	0.813	EPA TO-15	12/31/2024 13:52	01/01/2025 04:25	YR
							Certifications:	NELAC-NY12058,NJDEP-NY037		
79-01-6	**Trichloroethylene**	**0.262**		ug/m³	0.109	0.813	EPA TO-15	12/31/2024 13:52	01/01/2025 04:25	YR
							Certifications:	NELAC-NY12058,NJDEP-NY037		
75-69-4	**Trichlorofluoromethane (Freon 11)**	**1.37**		ug/m³	0.457	0.813	EPA TO-15	12/31/2024 13:52	01/01/2025 04:25	YR
							Certifications:	NELAC-NY12058,NJDEP-NY037		

Sample Information

Client Sample ID: FD02_122324 **York Sample ID:** 24L1600-02

York Project (SDG) No.	Client Project ID	Matrix	Collection Date/Time	Date Received
24L1600	170361307	Indoor Ambient Air	December 23, 2024 12:01 pm	12/23/2024

VOA, TO15 MASTER **Log-in Notes:** **Sample Notes:**

Sample Prepared by Method: EPA TO15 PREP

CAS No.	Parameter	Result	Flag	Units	Reported to LOQ	Dilution	Reference Method	Date/Time Prepared	Date/Time Analyzed	Analyst
108-05-4	Vinyl acetate	ND	TO-LC S-L	ug/m³	0.286	0.813	EPA TO-15	12/31/2024 13:52	01/01/2025 04:25	YR
							Certifications:	NELAC-NY12058,NJDEP-NY037		
593-60-2	Vinyl bromide	ND		ug/m³	0.356	0.813	EPA TO-15	12/31/2024 13:52	01/01/2025 04:25	YR
							Certifications:	NELAC-NY12058,NJDEP-NY037		
75-01-4	Vinyl Chloride	ND		ug/m³	0.104	0.813	EPA TO-15	12/31/2024 13:52	01/01/2025 04:25	YR
							Certifications:	NELAC-NY12058,NJDEP-NY037		

Sample Information

Client Sample ID: FD03_122324 **York Sample ID:** 24L1600-03

York Project (SDG) No.	Client Project ID	Matrix	Collection Date/Time	Date Received
24L1600	170361307	Indoor Ambient Air	December 23, 2024 12:02 pm	12/23/2024

VOA, TO15 MASTER

Log-in Notes:

Sample Notes:

Sample Prepared by Method: EPA TO15 PREP

CAS No.	Parameter	Result	Flag	Units	Reported to LOQ	Dilution	Reference Method	Date/Time Prepared	Date/Time Analyzed	Analyst
630-20-6	* 1,1,1,2-Tetrachloroethane	ND		ug/m³	0.520	0.758	EPA TO-15 Certifications:	12/31/2024 13:52	01/01/2025 05:10	YR
71-55-6	1,1,1-Trichloroethane	ND		ug/m³	0.414	0.758	EPA TO-15 Certifications:	12/31/2024 13:52 NELAC-NY12058,NJDEP-NY037	01/01/2025 05:10	YR
79-34-5	1,1,2,2-Tetrachloroethane	ND		ug/m³	0.520	0.758	EPA TO-15 Certifications:	12/31/2024 13:52 NELAC-NY12058,NJDEP-NY037	01/01/2025 05:10	YR
76-13-1	1,1,2-Trichloro-1,2,2-trifluoroethane (Freon 113)	ND		ug/m³	0.581	0.758	EPA TO-15 Certifications:	12/31/2024 13:52 NELAC-NY12058,NJDEP-NY037	01/01/2025 05:10	YR
79-00-5	1,1,2-Trichloroethane	ND		ug/m³	0.414	0.758	EPA TO-15 Certifications:	12/31/2024 13:52 NELAC-NY12058,NJDEP-NY037	01/01/2025 05:10	YR
75-34-3	1,1-Dichloroethane	ND		ug/m³	0.307	0.758	EPA TO-15 Certifications:	12/31/2024 13:52 NELAC-NY12058,NJDEP-NY037	01/01/2025 05:10	YR
75-35-4	1,1-Dichloroethylene	ND		ug/m³	0.150	0.758	EPA TO-15 Certifications:	12/31/2024 13:52 NELAC-NY12058,NJDEP-NY037	01/01/2025 05:10	YR
120-82-1	1,2,4-Trichlorobenzene	ND		ug/m³	0.563	0.758	EPA TO-15 Certifications:	12/31/2024 13:52 NELAC-NY12058,NJDEP-NY037	01/01/2025 05:10	YR
95-63-6	**1,2,4-Trimethylbenzene**	**0.633**		ug/m³	0.373	0.758	EPA TO-15 Certifications:	12/31/2024 13:52 NELAC-NY12058,NJDEP-NY037	01/01/2025 05:10	YR
106-93-4	1,2-Dibromoethane	ND		ug/m³	0.582	0.758	EPA TO-15 Certifications:	12/31/2024 13:52 NELAC-NY12058,NJDEP-NY037	01/01/2025 05:10	YR
95-50-1	1,2-Dichlorobenzene	ND		ug/m³	0.456	0.758	EPA TO-15 Certifications:	12/31/2024 13:52 NELAC-NY12058,NJDEP-NY037	01/01/2025 05:10	YR
107-06-2	1,2-Dichloroethane	ND	TO-CCV, TO-LCS-L	ug/m³	0.307	0.758	EPA TO-15 Certifications:	12/31/2024 13:52 NELAC-NY12058,NJDEP-NY037	01/01/2025 05:10	YR
78-87-5	1,2-Dichloropropane	ND		ug/m³	0.350	0.758	EPA TO-15 Certifications:	12/31/2024 13:52 NELAC-NY12058,NJDEP-NY037	01/01/2025 05:10	YR
76-14-2	1,2-Dichlorotetrafluoroethane	ND		ug/m³	0.530	0.758	EPA TO-15 Certifications:	12/31/2024 13:52 NELAC-NY12058,NJDEP-NY037	01/01/2025 05:10	YR
108-67-8	1,3,5-Trimethylbenzene	ND		ug/m³	0.373	0.758	EPA TO-15 Certifications:	12/31/2024 13:52 NELAC-NY12058,NJDEP-NY037	01/01/2025 05:10	YR
106-99-0	1,3-Butadiene	ND		ug/m³	0.503	0.758	EPA TO-15 Certifications:	12/31/2024 13:52 NELAC-NY12058,NJDEP-NY037	01/01/2025 05:10	YR
541-73-1	1,3-Dichlorobenzene	ND		ug/m³	0.456	0.758	EPA TO-15 Certifications:	12/31/2024 13:52 NELAC-NY12058,NJDEP-NY037	01/01/2025 05:10	YR
142-28-9	* 1,3-Dichloropropane	ND		ug/m³	0.350	0.758	EPA TO-15 Certifications:	12/31/2024 13:52	01/01/2025 05:10	YR
106-46-7	1,4-Dichlorobenzene	ND		ug/m³	0.456	0.758	EPA TO-15 Certifications:	12/31/2024 13:52 NELAC-NY12058,NJDEP-NY037	01/01/2025 05:10	YR
123-91-1	1,4-Dioxane	ND		ug/m³	1.09	0.758	EPA TO-15 Certifications:	12/31/2024 13:52 NELAC-NY12058,NJDEP-NY037	01/01/2025 05:10	YR
540-84-1	* **2,2,4-Trimethylpentane**	**0.956**		ug/m³	0.177	0.758	EPA TO-15 Certifications:	12/31/2024 13:52	01/01/2025 05:10	YR

Sample Information

Client Sample ID: FD03_122324 **York Sample ID:** 24L1600-03

York Project (SDG) No.	Client Project ID	Matrix	Collection Date/Time	Date Received
24L1600	170361307	Indoor Ambient Air	December 23, 2024 12:02 pm	12/23/2024

VOA, TO15 MASTER **Log-in Notes:** **Sample Notes:**

Sample Prepared by Method: EPA TO15 PREP

CAS No.	Parameter	Result	Flag	Units	Reported to LOQ	Dilution	Reference Method	Date/Time Prepared	Date/Time Analyzed	Analyst
78-93-3	**2-Butanone**	**2.19**		ug/m³	0.224	0.758	EPA TO-15	12/31/2024 13:52	01/01/2025 05:10	YR
							Certifications: NELAC-NY12058,NJDEP-NY037			
591-78-6	* 2-Hexanone	ND		ug/m³	0.621	0.758	EPA TO-15	12/31/2024 13:52	01/01/2025 05:10	YR
							Certifications:			
107-05-1	3-Chloropropene	ND		ug/m³	1.19	0.758	EPA TO-15	12/31/2024 13:52	01/01/2025 05:10	YR
							Certifications: NELAC-NY12058,NJDEP-NY037			
108-10-1	**4-Methyl-2-pentanone**	**0.497**		ug/m³	0.311	0.758	EPA TO-15	12/31/2024 13:52	01/01/2025 05:10	YR
							Certifications: NELAC-NY12058,NJDEP-NY037			
67-64-1	**Acetone**	**32.3**		ug/m³	1.44	0.758	EPA TO-15	12/31/2024 13:52	01/01/2025 05:10	YR
							Certifications: NELAC-NY12058,NJDEP-NY037			
107-13-1	Acrylonitrile	ND		ug/m³	2.14	0.758	EPA TO-15	12/31/2024 13:52	01/01/2025 05:10	YR
							Certifications: NELAC-NY12058,NJDEP-NY037			
71-43-2	**Benzene**	**1.11**		ug/m³	0.242	0.758	EPA TO-15	12/31/2024 13:52	01/01/2025 05:10	YR
							Certifications: NELAC-NY12058,NJDEP-NY037			
100-44-7	Benzyl chloride	ND		ug/m³	0.392	0.758	EPA TO-15	12/31/2024 13:52	01/01/2025 05:10	YR
							Certifications: NELAC-NY12058,NJDEP-NY037			
75-27-4	Bromodichloromethane	ND		ug/m³	0.508	0.758	EPA TO-15	12/31/2024 13:52	01/01/2025 05:10	YR
							Certifications: NELAC-NY12058,NJDEP-NY037			
75-25-2	Bromoform	ND	TO-CCV	ug/m³	0.784	0.758	EPA TO-15	12/31/2024 13:52	01/01/2025 05:10	YR
							Certifications: NELAC-NY12058,NJDEP-NY037			
74-83-9	Bromomethane	ND		ug/m³	0.294	0.758	EPA TO-15	12/31/2024 13:52	01/01/2025 05:10	YR
							Certifications: NELAC-NY12058,NJDEP-NY037			
75-15-0	Carbon disulfide	ND		ug/m³	0.236	0.758	EPA TO-15	12/31/2024 13:52	01/01/2025 05:10	YR
							Certifications: NELAC-NY12058,NJDEP-NY037			
56-23-5	**Carbon tetrachloride**	**0.429**		ug/m³	0.119	0.758	EPA TO-15	12/31/2024 13:52	01/01/2025 05:10	YR
							Certifications: NELAC-NY12058,NJDEP-NY037			
108-90-7	Chlorobenzene	ND		ug/m³	0.349	0.758	EPA TO-15	12/31/2024 13:52	01/01/2025 05:10	YR
							Certifications: NELAC-NY12058,NJDEP-NY037			
75-00-3	Chloroethane	ND		ug/m³	0.200	0.758	EPA TO-15	12/31/2024 13:52	01/01/2025 05:10	YR
							Certifications: NELAC-NY12058,NJDEP-NY037			
67-66-3	**Chloroform**	**8.85**		ug/m³	0.370	0.758	EPA TO-15	12/31/2024 13:52	01/01/2025 05:10	YR
							Certifications: NELAC-NY12058,NJDEP-NY037			
74-87-3	**Chloromethane**	**1.14**		ug/m³	0.157	0.758	EPA TO-15	12/31/2024 13:52	01/01/2025 05:10	YR
							Certifications: NELAC-NY12058,NJDEP-NY037			
156-59-2	**cis-1,2-Dichloroethylene**	**0.150**		ug/m³	0.150	0.758	EPA TO-15	12/31/2024 13:52	01/01/2025 05:10	YR
							Certifications: NELAC-NY12058,NJDEP-NY037			
10061-01-5	cis-1,3-Dichloropropylene	ND		ug/m³	0.344	0.758	EPA TO-15	12/31/2024 13:52	01/01/2025 05:10	YR
							Certifications: NELAC-NY12058,NJDEP-NY037			
110-82-7	**Cyclohexane**	**0.470**		ug/m³	0.261	0.758	EPA TO-15	12/31/2024 13:52	01/01/2025 05:10	YR
							Certifications: NELAC-NY12058,NJDEP-NY037			
124-48-1	Dibromochloromethane	ND		ug/m³	0.646	0.758	EPA TO-15	12/31/2024 13:52	01/01/2025 05:10	YR
							Certifications: NELAC-NY12058,NJDEP-NY037			
75-71-8	**Dichlorodifluoromethane**	**2.62**		ug/m³	0.375	0.758	EPA TO-15	12/31/2024 13:52	01/01/2025 05:10	YR
							Certifications: NELAC-NY12058,NJDEP-NY037			

Sample Information

Client Sample ID: FD03_122324 **York Sample ID:** 24L1600-03

York Project (SDG) No.	Client Project ID	Matrix	Collection Date/Time	Date Received
24L1600	170361307	Indoor Ambient Air	December 23, 2024 12:02 pm	12/23/2024

VOA, TO15 MASTER **Log-in Notes:** **Sample Notes:**

Sample Prepared by Method: EPA TO15 PREP

CAS No.	Parameter	Result	Flag	Units	Reported to LOQ	Dilution	Reference Method	Date/Time Prepared	Date/Time Analyzed	Analyst
141-78-6	* **Ethyl acetate**	**1.17**		ug/m³	0.546	0.758	EPA TO-15	12/31/2024 13:52	01/01/2025 05:10	YR
							Certifications:			
100-41-4	**Ethyl Benzene**	**1.18**		ug/m³	0.329	0.758	EPA TO-15	12/31/2024 13:52	01/01/2025 05:10	YR
							Certifications:	NELAC-NY12058,NJDEP-NY037		
87-68-3	Hexachlorobutadiene	ND		ug/m³	0.808	0.758	EPA TO-15	12/31/2024 13:52	01/01/2025 05:10	YR
							Certifications:	NELAC-NY12058,NJDEP-NY037		
67-63-0	**Isopropanol**	**149**	E, TO-IPA	ug/m³	1.12	0.758	EPA TO-15	12/31/2024 13:52	01/01/2025 05:10	YR
							Certifications:	NELAC-NY12058,NJDEP-NY037		
80-62-6	**Methyl Methacrylate**	**0.497**		ug/m³	0.310	0.758	EPA TO-15	12/31/2024 13:52	01/01/2025 05:10	YR
							Certifications:	NELAC-NY12058,NJDEP-NY037		
1634-04-4	Methyl tert-butyl ether (MTBE)	ND		ug/m³	0.273	0.758	EPA TO-15	12/31/2024 13:52	01/01/2025 05:10	YR
							Certifications:	NELAC-NY12058,NJDEP-NY037		
75-09-2	Methylene chloride	ND		ug/m³	1.58	0.758	EPA TO-15	12/31/2024 13:52	01/01/2025 05:10	YR
							Certifications:	NELAC-NY12058,NJDEP-NY037		
91-20-3	* **Naphthalene**	**0.874**	TO-CCV	ug/m³	0.795	0.758	EPA TO-15	12/31/2024 13:52	01/01/2025 05:10	YR
							Certifications:	NJDEP-NY037		
142-82-5	**n-Heptane**	**0.621**		ug/m³	0.311	0.758	EPA TO-15	12/31/2024 13:52	01/01/2025 05:10	YR
							Certifications:	NELAC-NY12058,NJDEP-NY037		
110-54-3	**n-Hexane**	**1.28**		ug/m³	0.267	0.758	EPA TO-15	12/31/2024 13:52	01/01/2025 05:10	YR
							Certifications:	NELAC-NY12058,NJDEP-NY037		
95-47-6	**o-Xylene**	**1.51**		ug/m³	0.329	0.758	EPA TO-15	12/31/2024 13:52	01/01/2025 05:10	YR
							Certifications:	NELAC-NY12058,NJDEP-NY037		
179601-23-1	**p- & m- Xylenes**	**4.61**		ug/m³	0.658	0.758	EPA TO-15	12/31/2024 13:52	01/01/2025 05:10	YR
							Certifications:	NELAC-NY12058,NJDEP-NY037		
622-96-8	* **p-Ethyltoluene**	**0.559**		ug/m³	0.373	0.758	EPA TO-15	12/31/2024 13:52	01/01/2025 05:10	YR
							Certifications:			
115-07-1	* **Propylene**	**1.44**		ug/m³	0.130	0.758	EPA TO-15	12/31/2024 13:52	01/01/2025 05:10	YR
							Certifications:			
100-42-5	Styrene	ND		ug/m³	0.323	0.758	EPA TO-15	12/31/2024 13:52	01/01/2025 05:10	YR
							Certifications:	NELAC-NY12058,NJDEP-NY037		
127-18-4	**Tetrachloroethylene**	**0.771**		ug/m³	0.514	0.758	EPA TO-15	12/31/2024 13:52	01/01/2025 05:10	YR
							Certifications:	NELAC-NY12058,NJDEP-NY037		
109-99-9	* **Tetrahydrofuran**	**0.447**		ug/m³	0.447	0.758	EPA TO-15	12/31/2024 13:52	01/01/2025 05:10	YR
							Certifications:			
108-88-3	**Toluene**	**6.63**		ug/m³	0.286	0.758	EPA TO-15	12/31/2024 13:52	01/01/2025 05:10	YR
							Certifications:	NELAC-NY12058,NJDEP-NY037		
156-60-5	trans-1,2-Dichloroethylene	ND		ug/m³	0.301	0.758	EPA TO-15	12/31/2024 13:52	01/01/2025 05:10	YR
							Certifications:	NELAC-NY12058,NJDEP-NY037		
10061-02-6	trans-1,3-Dichloropropylene	ND		ug/m³	0.344	0.758	EPA TO-15	12/31/2024 13:52	01/01/2025 05:10	YR
							Certifications:	NELAC-NY12058,NJDEP-NY037		
79-01-6	**Trichloroethylene**	**0.530**		ug/m³	0.102	0.758	EPA TO-15	12/31/2024 13:52	01/01/2025 05:10	YR
							Certifications:	NELAC-NY12058,NJDEP-NY037		
75-69-4	**Trichlorofluoromethane (Freon 11)**	**1.24**		ug/m³	0.426	0.758	EPA TO-15	12/31/2024 13:52	01/01/2025 05:10	YR
							Certifications:	NELAC-NY12058,NJDEP-NY037		

Sample Information

Client Sample ID: FD03_122324 **York Sample ID:** 24L1600-03

York Project (SDG) No.	Client Project ID	Matrix	Collection Date/Time	Date Received
24L1600	170361307	Indoor Ambient Air	December 23, 2024 12:02 pm	12/23/2024

VOA, TO15 MASTER **Log-in Notes:** **Sample Notes:**

Sample Prepared by Method: EPA TO15 PREP

CAS No.	Parameter	Result	Flag	Units	Reported to LOQ	Dilution	Reference Method	Date/Time Prepared	Date/Time Analyzed	Analyst
108-05-4	Vinyl acetate	ND	TO-LC S-L	ug/m³	0.267	0.758	EPA TO-15	12/31/2024 13:52	01/01/2025 05:10	YR
							Certifications:	NELAC-NY12058,NJDEP-NY037		
593-60-2	Vinyl bromide	ND		ug/m³	0.332	0.758	EPA TO-15	12/31/2024 13:52	01/01/2025 05:10	YR
							Certifications:	NELAC-NY12058,NJDEP-NY037		
75-01-4	Vinyl Chloride	ND		ug/m³	0.0969	0.758	EPA TO-15	12/31/2024 13:52	01/01/2025 05:10	YR
							Certifications:	NELAC-NY12058,NJDEP-NY037		

Sample Information

Client Sample ID: FD04_122324 **York Sample ID:** 24L1600-04

York Project (SDG) No.	Client Project ID	Matrix	Collection Date/Time	Date Received
24L1600	170361307	Indoor Ambient Air	December 23, 2024 12:05 pm	12/23/2024

VOA, TO15 MASTER **Log-in Notes:** **Sample Notes:**

Sample Prepared by Method: EPA TO15 PREP

CAS No.	Parameter	Result	Flag	Units	Reported to LOQ	Dilution	Reference Method	Date/Time Prepared	Date/Time Analyzed	Analyst
630-20-6	* 1,1,1,2-Tetrachloroethane	ND		ug/m³	0.551	0.803	EPA TO-15 Certifications:	12/31/2024 13:52	01/01/2025 05:54	YR
71-55-6	1,1,1-Trichloroethane	ND		ug/m³	0.438	0.803	EPA TO-15 Certifications: NELAC-NY12058,NJDEP-NY037	12/31/2024 13:52	01/01/2025 05:54	YR
79-34-5	1,1,2,2-Tetrachloroethane	ND		ug/m³	0.551	0.803	EPA TO-15 Certifications: NELAC-NY12058,NJDEP-NY037	12/31/2024 13:52	01/01/2025 05:54	YR
76-13-1	1,1,2-Trichloro-1,2,2-trifluoroethane (Freon 113)	ND		ug/m³	0.615	0.803	EPA TO-15 Certifications: NELAC-NY12058,NJDEP-NY037	12/31/2024 13:52	01/01/2025 05:54	YR
79-00-5	1,1,2-Trichloroethane	ND		ug/m³	0.438	0.803	EPA TO-15 Certifications: NELAC-NY12058,NJDEP-NY037	12/31/2024 13:52	01/01/2025 05:54	YR
75-34-3	1,1-Dichloroethane	ND		ug/m³	0.325	0.803	EPA TO-15 Certifications: NELAC-NY12058,NJDEP-NY037	12/31/2024 13:52	01/01/2025 05:54	YR
75-35-4	1,1-Dichloroethylene	ND		ug/m³	0.159	0.803	EPA TO-15 Certifications: NELAC-NY12058,NJDEP-NY037	12/31/2024 13:52	01/01/2025 05:54	YR
120-82-1	1,2,4-Trichlorobenzene	ND		ug/m³	0.596	0.803	EPA TO-15 Certifications: NELAC-NY12058,NJDEP-NY037	12/31/2024 13:52	01/01/2025 05:54	YR
95-63-6	**1,2,4-Trimethylbenzene**	**0.553**		ug/m³	0.395	0.803	EPA TO-15 Certifications: NELAC-NY12058,NJDEP-NY037	12/31/2024 13:52	01/01/2025 05:54	YR
106-93-4	1,2-Dibromoethane	ND		ug/m³	0.617	0.803	EPA TO-15 Certifications: NELAC-NY12058,NJDEP-NY037	12/31/2024 13:52	01/01/2025 05:54	YR
95-50-1	1,2-Dichlorobenzene	ND		ug/m³	0.483	0.803	EPA TO-15 Certifications: NELAC-NY12058,NJDEP-NY037	12/31/2024 13:52	01/01/2025 05:54	YR
107-06-2	1,2-Dichloroethane	ND	TO-CCV, TO-LCS-L	ug/m³	0.325	0.803	EPA TO-15 Certifications: NELAC-NY12058,NJDEP-NY037	12/31/2024 13:52	01/01/2025 05:54	YR
78-87-5	1,2-Dichloropropane	ND		ug/m³	0.371	0.803	EPA TO-15 Certifications: NELAC-NY12058,NJDEP-NY037	12/31/2024 13:52	01/01/2025 05:54	YR
76-14-2	1,2-Dichlorotetrafluoroethane	ND		ug/m³	0.561	0.803	EPA TO-15 Certifications: NELAC-NY12058,NJDEP-NY037	12/31/2024 13:52	01/01/2025 05:54	YR
108-67-8	1,3,5-Trimethylbenzene	ND		ug/m³	0.395	0.803	EPA TO-15 Certifications: NELAC-NY12058,NJDEP-NY037	12/31/2024 13:52	01/01/2025 05:54	YR
106-99-0	1,3-Butadiene	ND		ug/m³	0.533	0.803	EPA TO-15 Certifications: NELAC-NY12058,NJDEP-NY037	12/31/2024 13:52	01/01/2025 05:54	YR
541-73-1	1,3-Dichlorobenzene	ND		ug/m³	0.483	0.803	EPA TO-15 Certifications: NELAC-NY12058,NJDEP-NY037	12/31/2024 13:52	01/01/2025 05:54	YR
142-28-9	* 1,3-Dichloropropane	ND		ug/m³	0.371	0.803	EPA TO-15 Certifications:	12/31/2024 13:52	01/01/2025 05:54	YR
106-46-7	1,4-Dichlorobenzene	ND		ug/m³	0.483	0.803	EPA TO-15 Certifications: NELAC-NY12058,NJDEP-NY037	12/31/2024 13:52	01/01/2025 05:54	YR
123-91-1	1,4-Dioxane	ND		ug/m³	1.16	0.803	EPA TO-15 Certifications: NELAC-NY12058,NJDEP-NY037	12/31/2024 13:52	01/01/2025 05:54	YR
540-84-1	* **2,2,4-Trimethylpentane**	**1.01**		ug/m³	0.188	0.803	EPA TO-15 Certifications:	12/31/2024 13:52	01/01/2025 05:54	YR

Sample Information

Client Sample ID: FD04_122324 **York Sample ID:** 24L1600-04

York Project (SDG) No.	Client Project ID	Matrix	Collection Date/Time	Date Received
24L1600	170361307	Indoor Ambient Air	December 23, 2024 12:05 pm	12/23/2024

VOA, TO15 MASTER **Log-in Notes:** **Sample Notes:**

Sample Prepared by Method: EPA TO15 PREP

CAS No.	Parameter	Result	Flag	Units	Reported to LOQ	Dilution	Reference Method	Date/Time Prepared	Date/Time Analyzed	Analyst
78-93-3	**2-Butanone**	**5.07**		ug/m³	0.237	0.803	EPA TO-15	12/31/2024 13:52	01/01/2025 05:54	YR
							Certifications: NELAC-NY12058,NJDEP-NY037			
591-78-6	* 2-Hexanone	ND		ug/m³	0.658	0.803	EPA TO-15	12/31/2024 13:52	01/01/2025 05:54	YR
							Certifications:			
107-05-1	3-Chloropropene	ND		ug/m³	1.26	0.803	EPA TO-15	12/31/2024 13:52	01/01/2025 05:54	YR
							Certifications: NELAC-NY12058,NJDEP-NY037			
108-10-1	**4-Methyl-2-pentanone**	**0.625**		ug/m³	0.329	0.803	EPA TO-15	12/31/2024 13:52	01/01/2025 05:54	YR
							Certifications: NELAC-NY12058,NJDEP-NY037			
67-64-1	**Acetone**	**90.5**		ug/m³	5.73	3.016	EPA TO-15	01/02/2025 06:52	01/02/2025 21:09	YR
							Certifications: NELAC-NY12058,NJDEP-NY037			
107-13-1	**Acrylonitrile**	**10.5**		ug/m³	2.27	0.803	EPA TO-15	12/31/2024 13:52	01/01/2025 05:54	YR
							Certifications: NELAC-NY12058,NJDEP-NY037			
71-43-2	**Benzene**	**1.33**		ug/m³	0.257	0.803	EPA TO-15	12/31/2024 13:52	01/01/2025 05:54	YR
							Certifications: NELAC-NY12058,NJDEP-NY037			
100-44-7	Benzyl chloride	ND		ug/m³	0.416	0.803	EPA TO-15	12/31/2024 13:52	01/01/2025 05:54	YR
							Certifications: NELAC-NY12058,NJDEP-NY037			
75-27-4	Bromodichloromethane	ND		ug/m³	0.538	0.803	EPA TO-15	12/31/2024 13:52	01/01/2025 05:54	YR
							Certifications: NELAC-NY12058,NJDEP-NY037			
75-25-2	Bromoform	ND	TO-CCV	ug/m³	0.830	0.803	EPA TO-15	12/31/2024 13:52	01/01/2025 05:54	YR
							Certifications: NELAC-NY12058,NJDEP-NY037			
74-83-9	Bromomethane	ND		ug/m³	0.312	0.803	EPA TO-15	12/31/2024 13:52	01/01/2025 05:54	YR
							Certifications: NELAC-NY12058,NJDEP-NY037			
75-15-0	Carbon disulfide	ND		ug/m³	0.250	0.803	EPA TO-15	12/31/2024 13:52	01/01/2025 05:54	YR
							Certifications: NELAC-NY12058,NJDEP-NY037			
56-23-5	**Carbon tetrachloride**	**0.455**		ug/m³	0.126	0.803	EPA TO-15	12/31/2024 13:52	01/01/2025 05:54	YR
							Certifications: NELAC-NY12058,NJDEP-NY037			
108-90-7	Chlorobenzene	ND		ug/m³	0.370	0.803	EPA TO-15	12/31/2024 13:52	01/01/2025 05:54	YR
							Certifications: NELAC-NY12058,NJDEP-NY037			
75-00-3	Chloroethane	ND		ug/m³	0.212	0.803	EPA TO-15	12/31/2024 13:52	01/01/2025 05:54	YR
							Certifications: NELAC-NY12058,NJDEP-NY037			
67-66-3	**Chloroform**	**0.549**		ug/m³	0.392	0.803	EPA TO-15	12/31/2024 13:52	01/01/2025 05:54	YR
							Certifications: NELAC-NY12058,NJDEP-NY037			
74-87-3	**Chloromethane**	**2.12**		ug/m³	0.166	0.803	EPA TO-15	12/31/2024 13:52	01/01/2025 05:54	YR
							Certifications: NELAC-NY12058,NJDEP-NY037			
156-59-2	cis-1,2-Dichloroethylene	ND		ug/m³	0.159	0.803	EPA TO-15	12/31/2024 13:52	01/01/2025 05:54	YR
							Certifications: NELAC-NY12058,NJDEP-NY037			
10061-01-5	cis-1,3-Dichloropropylene	ND		ug/m³	0.364	0.803	EPA TO-15	12/31/2024 13:52	01/01/2025 05:54	YR
							Certifications: NELAC-NY12058,NJDEP-NY037			
110-82-7	**Cyclohexane**	**0.415**		ug/m³	0.276	0.803	EPA TO-15	12/31/2024 13:52	01/01/2025 05:54	YR
							Certifications: NELAC-NY12058,NJDEP-NY037			
124-48-1	Dibromochloromethane	ND		ug/m³	0.684	0.803	EPA TO-15	12/31/2024 13:52	01/01/2025 05:54	YR
							Certifications: NELAC-NY12058,NJDEP-NY037			
75-71-8	**Dichlorodifluoromethane**	**2.50**		ug/m³	0.397	0.803	EPA TO-15	12/31/2024 13:52	01/01/2025 05:54	YR
							Certifications: NELAC-NY12058,NJDEP-NY037			

Sample Information

Client Sample ID: FD04_122324 **York Sample ID:** 24L1600-04

York Project (SDG) No.	Client Project ID	Matrix	Collection Date/Time	Date Received
24L1600	170361307	Indoor Ambient Air	December 23, 2024 12:05 pm	12/23/2024

VOA, TO15 MASTER **Log-in Notes:** **Sample Notes:**

Sample Prepared by Method: EPA TO15 PREP

CAS No.	Parameter	Result	Flag	Units	Reported to LOQ	Dilution	Reference Method	Date/Time Prepared	Date/Time Analyzed	Analyst
141-78-6	* **Ethyl acetate**	**360**		ug/m³	2.17	3.016	EPA TO-15	01/02/2025 06:52	01/02/2025 21:09	YR
							Certifications:			
100-41-4	**Ethyl Benzene**	**1.26**		ug/m³	0.349	0.803	EPA TO-15	12/31/2024 13:52	01/01/2025 05:54	YR
							Certifications:	NELAC-NY12058,NJDEP-NY037		
87-68-3	Hexachlorobutadiene	ND		ug/m³	0.856	0.803	EPA TO-15	12/31/2024 13:52	01/01/2025 05:54	YR
							Certifications:	NELAC-NY12058,NJDEP-NY037		
67-63-0	Isopropanol	ND		ug/m³	1.18	0.803	EPA TO-15	12/31/2024 13:52	01/01/2025 05:54	YR
							Certifications:	NELAC-NY12058,NJDEP-NY037		
80-62-6	**Methyl Methacrylate**	**0.625**		ug/m³	0.329	0.803	EPA TO-15	12/31/2024 13:52	01/01/2025 05:54	YR
							Certifications:	NELAC-NY12058,NJDEP-NY037		
1634-04-4	Methyl tert-butyl ether (MTBE)	ND		ug/m³	0.290	0.803	EPA TO-15	12/31/2024 13:52	01/01/2025 05:54	YR
							Certifications:	NELAC-NY12058,NJDEP-NY037		
75-09-2	Methylene chloride	ND		ug/m³	1.67	0.803	EPA TO-15	12/31/2024 13:52	01/01/2025 05:54	YR
							Certifications:	NELAC-NY12058,NJDEP-NY037		
91-20-3	* Naphthalene	ND		ug/m³	0.842	0.803	EPA TO-15	12/31/2024 13:52	01/01/2025 05:54	YR
							Certifications:	NJDEP-NY037		
142-82-5	**n-Heptane**	**0.658**		ug/m³	0.329	0.803	EPA TO-15	12/31/2024 13:52	01/01/2025 05:54	YR
							Certifications:	NELAC-NY12058,NJDEP-NY037		
110-54-3	**n-Hexane**	**1.59**		ug/m³	0.283	0.803	EPA TO-15	12/31/2024 13:52	01/01/2025 05:54	YR
							Certifications:	NELAC-NY12058,NJDEP-NY037		
95-47-6	**o-Xylene**	**1.53**		ug/m³	0.349	0.803	EPA TO-15	12/31/2024 13:52	01/01/2025 05:54	YR
							Certifications:	NELAC-NY12058,NJDEP-NY037		
179601-23-1	**p- & m- Xylenes**	**4.81**		ug/m³	0.697	0.803	EPA TO-15	12/31/2024 13:52	01/01/2025 05:54	YR
							Certifications:	NELAC-NY12058,NJDEP-NY037		
622-96-8	* **p-Ethyltoluene**	**0.553**		ug/m³	0.395	0.803	EPA TO-15	12/31/2024 13:52	01/01/2025 05:54	YR
							Certifications:			
115-07-1	* **Propylene**	**2.56**		ug/m³	0.138	0.803	EPA TO-15	12/31/2024 13:52	01/01/2025 05:54	YR
							Certifications:			
100-42-5	Styrene	ND		ug/m³	0.342	0.803	EPA TO-15	12/31/2024 13:52	01/01/2025 05:54	YR
							Certifications:	NELAC-NY12058,NJDEP-NY037		
127-18-4	**Tetrachloroethylene**	**15.5**		ug/m³	0.545	0.803	EPA TO-15	12/31/2024 13:52	01/01/2025 05:54	YR
							Certifications:	NELAC-NY12058,NJDEP-NY037		
109-99-9	* **Tetrahydrofuran**	**0.592**		ug/m³	0.474	0.803	EPA TO-15	12/31/2024 13:52	01/01/2025 05:54	YR
							Certifications:			
108-88-3	**Toluene**	**6.75**		ug/m³	0.303	0.803	EPA TO-15	12/31/2024 13:52	01/01/2025 05:54	YR
							Certifications:	NELAC-NY12058,NJDEP-NY037		
156-60-5	trans-1,2-Dichloroethylene	ND		ug/m³	0.318	0.803	EPA TO-15	12/31/2024 13:52	01/01/2025 05:54	YR
							Certifications:	NELAC-NY12058,NJDEP-NY037		
10061-02-6	trans-1,3-Dichloropropylene	ND		ug/m³	0.364	0.803	EPA TO-15	12/31/2024 13:52	01/01/2025 05:54	YR
							Certifications:	NELAC-NY12058,NJDEP-NY037		
79-01-6	**Trichloroethylene**	**0.302**		ug/m³	0.108	0.803	EPA TO-15	12/31/2024 13:52	01/01/2025 05:54	YR
							Certifications:	NELAC-NY12058,NJDEP-NY037		
75-69-4	Trichlorofluoromethane (Freon 11)	ND		ug/m³	0.451	0.803	EPA TO-15	12/31/2024 13:52	01/01/2025 05:54	YR
							Certifications:	NELAC-NY12058,NJDEP-NY037		

Sample Information

Client Sample ID: FD04_122324 **York Sample ID:** 24L1600-04

York Project (SDG) No.	Client Project ID	Matrix	Collection Date/Time	Date Received
24L1600	170361307	Indoor Ambient Air	December 23, 2024 12:05 pm	12/23/2024

VOA, TO15 MASTER

Log-in Notes:

Sample Notes:

Sample Prepared by Method: EPA TO15 PREP

CAS No.	Parameter	Result	Flag	Units	Reported to LOQ	Dilution	Reference Method	Date/Time Prepared	Date/Time Analyzed	Analyst
108-05-4	Vinyl acetate	ND	TO-LC S-L	ug/m³	0.283	0.803	EPA TO-15	12/31/2024 13:52	01/01/2025 05:54	YR
							Certifications:	NELAC-NY12058,NJDEP-NY037		
593-60-2	Vinyl bromide	ND		ug/m³	0.351	0.803	EPA TO-15	12/31/2024 13:52	01/01/2025 05:54	YR
							Certifications:	NELAC-NY12058,NJDEP-NY037		
75-01-4	Vinyl Chloride	ND		ug/m³	0.103	0.803	EPA TO-15	12/31/2024 13:52	01/01/2025 05:54	YR
							Certifications:	NELAC-NY12058,NJDEP-NY037		

Sample Information

Client Sample ID: FD05_122324 **York Sample ID:** 24L1600-05

York Project (SDG) No.	Client Project ID	Matrix	Collection Date/Time	Date Received
24L1600	170361307	Indoor Ambient Air	December 23, 2024 12:06 pm	12/23/2024

VOA, TO15 MASTER

Log-in Notes:

Sample Notes:

Sample Prepared by Method: EPA TO15 PREP

CAS No.	Parameter	Result	Flag	Units	Reported to LOQ	Dilution	Reference Method	Date/Time Prepared	Date/Time Analyzed	Analyst
630-20-6	* 1,1,1,2-Tetrachloroethane	ND		ug/m³	0.551	0.802	EPA TO-15 Certifications:	12/31/2024 13:52	01/01/2025 06:40	YR
71-55-6	1,1,1-Trichloroethane	ND		ug/m³	0.438	0.802	EPA TO-15 Certifications: NELAC-NY12058,NJDEP-NY037	12/31/2024 13:52	01/01/2025 06:40	YR
79-34-5	1,1,2,2-Tetrachloroethane	ND		ug/m³	0.551	0.802	EPA TO-15 Certifications: NELAC-NY12058,NJDEP-NY037	12/31/2024 13:52	01/01/2025 06:40	YR
76-13-1	1,1,2-Trichloro-1,2,2-trifluoroethane (Freon 113)	ND		ug/m³	0.615	0.802	EPA TO-15 Certifications: NELAC-NY12058,NJDEP-NY037	12/31/2024 13:52	01/01/2025 06:40	YR
79-00-5	1,1,2-Trichloroethane	ND		ug/m³	0.438	0.802	EPA TO-15 Certifications: NELAC-NY12058,NJDEP-NY037	12/31/2024 13:52	01/01/2025 06:40	YR
75-34-3	1,1-Dichloroethane	ND		ug/m³	0.325	0.802	EPA TO-15 Certifications: NELAC-NY12058,NJDEP-NY037	12/31/2024 13:52	01/01/2025 06:40	YR
75-35-4	1,1-Dichloroethylene	ND		ug/m³	0.159	0.802	EPA TO-15 Certifications: NELAC-NY12058,NJDEP-NY037	12/31/2024 13:52	01/01/2025 06:40	YR
120-82-1	1,2,4-Trichlorobenzene	ND		ug/m³	0.595	0.802	EPA TO-15 Certifications: NELAC-NY12058,NJDEP-NY037	12/31/2024 13:52	01/01/2025 06:40	YR
95-63-6	**1,2,4-Trimethylbenzene**	**0.473**		ug/m³	0.394	0.802	EPA TO-15 Certifications: NELAC-NY12058,NJDEP-NY037	12/31/2024 13:52	01/01/2025 06:40	YR
106-93-4	1,2-Dibromoethane	ND		ug/m³	0.616	0.802	EPA TO-15 Certifications: NELAC-NY12058,NJDEP-NY037	12/31/2024 13:52	01/01/2025 06:40	YR
95-50-1	1,2-Dichlorobenzene	ND		ug/m³	0.482	0.802	EPA TO-15 Certifications: NELAC-NY12058,NJDEP-NY037	12/31/2024 13:52	01/01/2025 06:40	YR
107-06-2	1,2-Dichloroethane	ND	TO-CCV, TO-LCS-L	ug/m³	0.325	0.802	EPA TO-15 Certifications: NELAC-NY12058,NJDEP-NY037	12/31/2024 13:52	01/01/2025 06:40	YR
78-87-5	1,2-Dichloropropane	ND		ug/m³	0.371	0.802	EPA TO-15 Certifications: NELAC-NY12058,NJDEP-NY037	12/31/2024 13:52	01/01/2025 06:40	YR
76-14-2	1,2-Dichlorotetrafluoroethane	ND		ug/m³	0.561	0.802	EPA TO-15 Certifications: NELAC-NY12058,NJDEP-NY037	12/31/2024 13:52	01/01/2025 06:40	YR
108-67-8	1,3,5-Trimethylbenzene	ND		ug/m³	0.394	0.802	EPA TO-15 Certifications: NELAC-NY12058,NJDEP-NY037	12/31/2024 13:52	01/01/2025 06:40	YR
106-99-0	1,3-Butadiene	ND		ug/m³	0.532	0.802	EPA TO-15 Certifications: NELAC-NY12058,NJDEP-NY037	12/31/2024 13:52	01/01/2025 06:40	YR
541-73-1	1,3-Dichlorobenzene	ND		ug/m³	0.482	0.802	EPA TO-15 Certifications: NELAC-NY12058,NJDEP-NY037	12/31/2024 13:52	01/01/2025 06:40	YR
142-28-9	* 1,3-Dichloropropane	ND		ug/m³	0.371	0.802	EPA TO-15 Certifications:	12/31/2024 13:52	01/01/2025 06:40	YR
106-46-7	1,4-Dichlorobenzene	ND		ug/m³	0.482	0.802	EPA TO-15 Certifications: NELAC-NY12058,NJDEP-NY037	12/31/2024 13:52	01/01/2025 06:40	YR
123-91-1	1,4-Dioxane	ND		ug/m³	1.16	0.802	EPA TO-15 Certifications: NELAC-NY12058,NJDEP-NY037	12/31/2024 13:52	01/01/2025 06:40	YR
540-84-1	* **2,2,4-Trimethylpentane**	**0.899**		ug/m³	0.187	0.802	EPA TO-15 Certifications:	12/31/2024 13:52	01/01/2025 06:40	YR

Sample Information

Client Sample ID: FD05_122324 **York Sample ID:** 24L1600-05

York Project (SDG) No.	Client Project ID	Matrix	Collection Date/Time	Date Received
24L1600	170361307	Indoor Ambient Air	December 23, 2024 12:06 pm	12/23/2024

VOA, TO15 MASTER **Log-in Notes:** **Sample Notes:**

Sample Prepared by Method: EPA TO15 PREP

CAS No.	Parameter	Result	Flag	Units	Reported to LOQ	Dilution	Reference Method	Date/Time Prepared	Date/Time Analyzed	Analyst
78-93-3	**2-Butanone**	**1.68**		ug/m³	0.237	0.802	EPA TO-15	12/31/2024 13:52	01/01/2025 06:40	YR
							Certifications: NELAC-NY12058,NJDEP-NY037			
591-78-6	* 2-Hexanone	ND		ug/m³	0.657	0.802	EPA TO-15	12/31/2024 13:52	01/01/2025 06:40	YR
							Certifications:			
107-05-1	3-Chloropropene	ND		ug/m³	1.26	0.802	EPA TO-15	12/31/2024 13:52	01/01/2025 06:40	YR
							Certifications: NELAC-NY12058,NJDEP-NY037			
108-10-1	**4-Methyl-2-pentanone**	**0.394**		ug/m³	0.329	0.802	EPA TO-15	12/31/2024 13:52	01/01/2025 06:40	YR
							Certifications: NELAC-NY12058,NJDEP-NY037			
67-64-1	**Acetone**	**21.0**		ug/m³	1.52	0.802	EPA TO-15	12/31/2024 13:52	01/01/2025 06:40	YR
							Certifications: NELAC-NY12058,NJDEP-NY037			
107-13-1	Acrylonitrile	ND		ug/m³	2.26	0.802	EPA TO-15	12/31/2024 13:52	01/01/2025 06:40	YR
							Certifications: NELAC-NY12058,NJDEP-NY037			
71-43-2	**Benzene**	**1.02**		ug/m³	0.256	0.802	EPA TO-15	12/31/2024 13:52	01/01/2025 06:40	YR
							Certifications: NELAC-NY12058,NJDEP-NY037			
100-44-7	Benzyl chloride	ND		ug/m³	0.415	0.802	EPA TO-15	12/31/2024 13:52	01/01/2025 06:40	YR
							Certifications: NELAC-NY12058,NJDEP-NY037			
75-27-4	Bromodichloromethane	ND		ug/m³	0.537	0.802	EPA TO-15	12/31/2024 13:52	01/01/2025 06:40	YR
							Certifications: NELAC-NY12058,NJDEP-NY037			
75-25-2	Bromoform	ND	TO-CCV	ug/m³	0.829	0.802	EPA TO-15	12/31/2024 13:52	01/01/2025 06:40	YR
							Certifications: NELAC-NY12058,NJDEP-NY037			
74-83-9	Bromomethane	ND		ug/m³	0.311	0.802	EPA TO-15	12/31/2024 13:52	01/01/2025 06:40	YR
							Certifications: NELAC-NY12058,NJDEP-NY037			
75-15-0	Carbon disulfide	ND		ug/m³	0.250	0.802	EPA TO-15	12/31/2024 13:52	01/01/2025 06:40	YR
							Certifications: NELAC-NY12058,NJDEP-NY037			
56-23-5	**Carbon tetrachloride**	**0.454**		ug/m³	0.126	0.802	EPA TO-15	12/31/2024 13:52	01/01/2025 06:40	YR
							Certifications: NELAC-NY12058,NJDEP-NY037			
108-90-7	Chlorobenzene	ND		ug/m³	0.369	0.802	EPA TO-15	12/31/2024 13:52	01/01/2025 06:40	YR
							Certifications: NELAC-NY12058,NJDEP-NY037			
75-00-3	Chloroethane	ND		ug/m³	0.212	0.802	EPA TO-15	12/31/2024 13:52	01/01/2025 06:40	YR
							Certifications: NELAC-NY12058,NJDEP-NY037			
67-66-3	Chloroform	ND		ug/m³	0.392	0.802	EPA TO-15	12/31/2024 13:52	01/01/2025 06:40	YR
							Certifications: NELAC-NY12058,NJDEP-NY037			
74-87-3	**Chloromethane**	**1.03**		ug/m³	0.166	0.802	EPA TO-15	12/31/2024 13:52	01/01/2025 06:40	YR
							Certifications: NELAC-NY12058,NJDEP-NY037			
156-59-2	cis-1,2-Dichloroethylene	ND		ug/m³	0.159	0.802	EPA TO-15	12/31/2024 13:52	01/01/2025 06:40	YR
							Certifications: NELAC-NY12058,NJDEP-NY037			
10061-01-5	cis-1,3-Dichloropropylene	ND		ug/m³	0.364	0.802	EPA TO-15	12/31/2024 13:52	01/01/2025 06:40	YR
							Certifications: NELAC-NY12058,NJDEP-NY037			
110-82-7	**Cyclohexane**	**0.359**		ug/m³	0.276	0.802	EPA TO-15	12/31/2024 13:52	01/01/2025 06:40	YR
							Certifications: NELAC-NY12058,NJDEP-NY037			
124-48-1	Dibromochloromethane	ND		ug/m³	0.683	0.802	EPA TO-15	12/31/2024 13:52	01/01/2025 06:40	YR
							Certifications: NELAC-NY12058,NJDEP-NY037			
75-71-8	**Dichlorodifluoromethane**	**2.62**		ug/m³	0.397	0.802	EPA TO-15	12/31/2024 13:52	01/01/2025 06:40	YR
							Certifications: NELAC-NY12058,NJDEP-NY037			

Sample Information

Client Sample ID: FD05_122324 **York Sample ID:** 24L1600-05

York Project (SDG) No.	Client Project ID	Matrix	Collection Date/Time	Date Received
24L1600	170361307	Indoor Ambient Air	December 23, 2024 12:06 pm	12/23/2024

VOA, TO15 MASTER

Log-in Notes:

Sample Notes:

Sample Prepared by Method: EPA TO15 PREP

CAS No.	Parameter	Result	Flag	Units	Reported to LOQ	Dilution	Reference Method	Date/Time Prepared	Date/Time Analyzed	Analyst
141-78-6	* **Ethyl acetate**	**0.780**		ug/m³	0.578	0.802	EPA TO-15	12/31/2024 13:52	01/01/2025 06:40	YR
							Certifications:			
100-41-4	**Ethyl Benzene**	**0.975**		ug/m³	0.348	0.802	EPA TO-15	12/31/2024 13:52	01/01/2025 06:40	YR
							Certifications:	NELAC-NY12058,NJDEP-NY037		
87-68-3	Hexachlorobutadiene	ND		ug/m³	0.855	0.802	EPA TO-15	12/31/2024 13:52	01/01/2025 06:40	YR
							Certifications:	NELAC-NY12058,NJDEP-NY037		
67-63-0	**Isopropanol**	**109**	E, TO-IPA	ug/m³	1.18	0.802	EPA TO-15	12/31/2024 13:52	01/01/2025 06:40	YR
							Certifications:	NELAC-NY12058,NJDEP-NY037		
80-62-6	**Methyl Methacrylate**	**0.394**		ug/m³	0.328	0.802	EPA TO-15	12/31/2024 13:52	01/01/2025 06:40	YR
							Certifications:	NELAC-NY12058,NJDEP-NY037		
1634-04-4	Methyl tert-butyl ether (MTBE)	ND		ug/m³	0.289	0.802	EPA TO-15	12/31/2024 13:52	01/01/2025 06:40	YR
							Certifications:	NELAC-NY12058,NJDEP-NY037		
75-09-2	Methylene chloride	ND		ug/m³	1.67	0.802	EPA TO-15	12/31/2024 13:52	01/01/2025 06:40	YR
							Certifications:	NELAC-NY12058,NJDEP-NY037		
91-20-3	* Naphthalene	ND		ug/m³	0.841	0.802	EPA TO-15	12/31/2024 13:52	01/01/2025 06:40	YR
							Certifications:	NJDEP-NY037		
142-82-5	**n-Heptane**	**0.559**		ug/m³	0.329	0.802	EPA TO-15	12/31/2024 13:52	01/01/2025 06:40	YR
							Certifications:	NELAC-NY12058,NJDEP-NY037		
110-54-3	**n-Hexane**	**1.27**		ug/m³	0.283	0.802	EPA TO-15	12/31/2024 13:52	01/01/2025 06:40	YR
							Certifications:	NELAC-NY12058,NJDEP-NY037		
95-47-6	**o-Xylene**	**1.29**		ug/m³	0.348	0.802	EPA TO-15	12/31/2024 13:52	01/01/2025 06:40	YR
							Certifications:	NELAC-NY12058,NJDEP-NY037		
179601-23-1	**p- & m- Xylenes**	**3.83**		ug/m³	0.696	0.802	EPA TO-15	12/31/2024 13:52	01/01/2025 06:40	YR
							Certifications:	NELAC-NY12058,NJDEP-NY037		
622-96-8	* **p-Ethyltoluene**	**0.434**		ug/m³	0.394	0.802	EPA TO-15	12/31/2024 13:52	01/01/2025 06:40	YR
							Certifications:			
115-07-1	* **Propylene**	**1.48**		ug/m³	0.138	0.802	EPA TO-15	12/31/2024 13:52	01/01/2025 06:40	YR
							Certifications:			
100-42-5	Styrene	ND		ug/m³	0.342	0.802	EPA TO-15	12/31/2024 13:52	01/01/2025 06:40	YR
							Certifications:	NELAC-NY12058,NJDEP-NY037		
127-18-4	**Tetrachloroethylene**	**0.598**		ug/m³	0.544	0.802	EPA TO-15	12/31/2024 13:52	01/01/2025 06:40	YR
							Certifications:	NELAC-NY12058,NJDEP-NY037		
109-99-9	* Tetrahydrofuran	ND		ug/m³	0.473	0.802	EPA TO-15	12/31/2024 13:52	01/01/2025 06:40	YR
							Certifications:			
108-88-3	**Toluene**	**5.32**		ug/m³	0.302	0.802	EPA TO-15	12/31/2024 13:52	01/01/2025 06:40	YR
							Certifications:	NELAC-NY12058,NJDEP-NY037		
156-60-5	trans-1,2-Dichloroethylene	ND		ug/m³	0.318	0.802	EPA TO-15	12/31/2024 13:52	01/01/2025 06:40	YR
							Certifications:	NELAC-NY12058,NJDEP-NY037		
10061-02-6	trans-1,3-Dichloropropylene	ND		ug/m³	0.364	0.802	EPA TO-15	12/31/2024 13:52	01/01/2025 06:40	YR
							Certifications:	NELAC-NY12058,NJDEP-NY037		
79-01-6	**Trichloroethylene**	**0.259**		ug/m³	0.108	0.802	EPA TO-15	12/31/2024 13:52	01/01/2025 06:40	YR
							Certifications:	NELAC-NY12058,NJDEP-NY037		
75-69-4	**Trichlorofluoromethane (Freon 11)**	**1.35**		ug/m³	0.451	0.802	EPA TO-15	12/31/2024 13:52	01/01/2025 06:40	YR
							Certifications:	NELAC-NY12058,NJDEP-NY037		

Sample Information

Client Sample ID: FD05_122324 **York Sample ID:** 24L1600-05

York Project (SDG) No.	Client Project ID	Matrix	Collection Date/Time	Date Received
24L1600	170361307	Indoor Ambient Air	December 23, 2024 12:06 pm	12/23/2024

VOA, TO15 MASTER **Log-in Notes:** **Sample Notes:**

Sample Prepared by Method: EPA TO15 PREP

CAS No.	Parameter	Result	Flag	Units	Reported to LOQ	Dilution	Reference Method	Date/Time Prepared	Date/Time Analyzed	Analyst
108-05-4	Vinyl acetate	ND	TO-LC S-L	ug/m³	0.282	0.802	EPA TO-15	12/31/2024 13:52	01/01/2025 06:40	YR
							Certifications:	NELAC-NY12058,NJDEP-NY037		
593-60-2	Vinyl bromide	ND		ug/m³	0.351	0.802	EPA TO-15	12/31/2024 13:52	01/01/2025 06:40	YR
							Certifications:	NELAC-NY12058,NJDEP-NY037		
75-01-4	Vinyl Chloride	ND		ug/m³	0.103	0.802	EPA TO-15	12/31/2024 13:52	01/01/2025 06:40	YR
							Certifications:	NELAC-NY12058,NJDEP-NY037		

Sample Information

Client Sample ID: EA01_122324 **York Sample ID:** 24L1600-06

York Project (SDG) No.	Client Project ID	Matrix	Collection Date/Time	Date Received
24L1600	170361307	Vapor Extraction	December 23, 2024 1:17 pm	12/23/2024

VOA, TO15 MASTER **Log-in Notes:** **Sample Notes:**

Sample Prepared by Method: EPA TO15 PREP

CAS No.	Parameter	Result	Flag	Units	Reported to LOQ	Dilution	Reference Method	Date/Time Prepared	Date/Time Analyzed	Analyst
630-20-6	* 1,1,1,2-Tetrachloroethane	ND		ug/m³	0.927	1.351	EPA TO-15	01/02/2025 06:52	01/02/2025 18:08	YR
							Certifications:			
71-55-6	1,1,1-Trichloroethane	ND		ug/m³	0.737	1.351	EPA TO-15	01/02/2025 06:52	01/02/2025 18:08	YR
							Certifications:	NELAC-NY12058,NJDEP-NY037		
79-34-5	1,1,2,2-Tetrachloroethane	ND		ug/m³	0.927	1.351	EPA TO-15	01/02/2025 06:52	01/02/2025 18:08	YR
							Certifications:	NELAC-NY12058,NJDEP-NY037		
76-13-1	1,1,2-Trichloro-1,2,2-trifluoroethane (Freon 113)	ND		ug/m³	1.04	1.351	EPA TO-15	01/02/2025 06:52	01/02/2025 18:08	YR
							Certifications:	NELAC-NY12058,NJDEP-NY037		
79-00-5	1,1,2-Trichloroethane	ND		ug/m³	0.737	1.351	EPA TO-15	01/02/2025 06:52	01/02/2025 18:08	YR
							Certifications:	NELAC-NY12058,NJDEP-NY037		
75-34-3	1,1-Dichloroethane	ND		ug/m³	0.547	1.351	EPA TO-15	01/02/2025 06:52	01/02/2025 18:08	YR
							Certifications:	NELAC-NY12058,NJDEP-NY037		
75-35-4	1,1-Dichloroethylene	ND		ug/m³	0.268	1.351	EPA TO-15	01/02/2025 06:52	01/02/2025 18:08	YR
							Certifications:	NELAC-NY12058,NJDEP-NY037		
120-82-1	1,2,4-Trichlorobenzene	ND		ug/m³	1.00	1.351	EPA TO-15	01/02/2025 06:52	01/02/2025 18:08	YR
							Certifications:	NELAC-NY12058,NJDEP-NY037		
95-63-6	**1,2,4-Trimethylbenzene**	**0.996**		ug/m³	0.664	1.351	EPA TO-15	01/02/2025 06:52	01/02/2025 18:08	YR
							Certifications:	NELAC-NY12058,NJDEP-NY037		
106-93-4	1,2-Dibromoethane	ND		ug/m³	1.04	1.351	EPA TO-15	01/02/2025 06:52	01/02/2025 18:08	YR
							Certifications:	NELAC-NY12058,NJDEP-NY037		
95-50-1	1,2-Dichlorobenzene	ND		ug/m³	0.812	1.351	EPA TO-15	01/02/2025 06:52	01/02/2025 18:08	YR
							Certifications:	NELAC-NY12058,NJDEP-NY037		
107-06-2	1,2-Dichloroethane	ND		ug/m³	0.547	1.351	EPA TO-15	01/02/2025 06:52	01/02/2025 18:08	YR
							Certifications:	NELAC-NY12058,NJDEP-NY037		
78-87-5	1,2-Dichloropropane	ND		ug/m³	0.624	1.351	EPA TO-15	01/02/2025 06:52	01/02/2025 18:08	YR
							Certifications:	NELAC-NY12058,NJDEP-NY037		
76-14-2	1,2-Dichlorotetrafluoroethane	ND		ug/m³	0.944	1.351	EPA TO-15	01/02/2025 06:52	01/02/2025 18:08	YR
							Certifications:	NELAC-NY12058,NJDEP-NY037		
108-67-8	1,3,5-Trimethylbenzene	ND		ug/m³	0.664	1.351	EPA TO-15	01/02/2025 06:52	01/02/2025 18:08	YR
							Certifications:	NELAC-NY12058,NJDEP-NY037		
106-99-0	1,3-Butadiene	ND		ug/m³	0.897	1.351	EPA TO-15	01/02/2025 06:52	01/02/2025 18:08	YR
							Certifications:	NELAC-NY12058,NJDEP-NY037		
541-73-1	1,3-Dichlorobenzene	ND		ug/m³	0.812	1.351	EPA TO-15	01/02/2025 06:52	01/02/2025 18:08	YR
							Certifications:	NELAC-NY12058,NJDEP-NY037		
142-28-9	* 1,3-Dichloropropane	ND		ug/m³	0.624	1.351	EPA TO-15	01/02/2025 06:52	01/02/2025 18:08	YR
							Certifications:			
106-46-7	1,4-Dichlorobenzene	ND		ug/m³	0.812	1.351	EPA TO-15	01/02/2025 06:52	01/02/2025 18:08	YR
							Certifications:	NELAC-NY12058,NJDEP-NY037		
123-91-1	1,4-Dioxane	ND		ug/m³	1.95	1.351	EPA TO-15	01/02/2025 06:52	01/02/2025 18:08	YR
							Certifications:	NELAC-NY12058,NJDEP-NY037		
540-84-1	*** 2,2,4-Trimethylpentane**	**6.00**		ug/m³	0.316	1.351	EPA TO-15	01/02/2025 06:52	01/02/2025 18:08	YR
							Certifications:			
78-93-3	**2-Butanone**	**1.75**		ug/m³	0.398	1.351	EPA TO-15	01/02/2025 06:52	01/02/2025 18:08	YR
							Certifications:	NELAC-NY12058,NJDEP-NY037		

Sample Information

Client Sample ID: EA01_122324 **York Sample ID:** 24L1600-06

York Project (SDG) No.	Client Project ID	Matrix	Collection Date/Time	Date Received
24L1600	170361307	Vapor Extraction	December 23, 2024 1:17 pm	12/23/2024

VOA, TO15 MASTER **Log-in Notes:** **Sample Notes:**

Sample Prepared by Method: EPA TO15 PREP

CAS No.	Parameter	Result	Flag	Units	Reported to LOQ	Dilution	Reference Method	Date/Time Prepared	Date/Time Analyzed	Analyst
591-78-6	* 2-Hexanone	ND		ug/m³	1.11	1.351	EPA TO-15	01/02/2025 06:52	01/02/2025 18:08	YR
							Certifications:			
107-05-1	3-Chloropropene	ND		ug/m³	2.11	1.351	EPA TO-15	01/02/2025 06:52	01/02/2025 18:08	YR
							Certifications:	NELAC-NY12058,NJDEP-NY037		
108-10-1	**4-Methyl-2-pentanone**	**1.22**		ug/m³	0.553	1.351	EPA TO-15	01/02/2025 06:52	01/02/2025 18:08	YR
							Certifications:	NELAC-NY12058,NJDEP-NY037		
67-64-1	**Acetone**	**15.8**		ug/m³	2.57	1.351	EPA TO-15	01/02/2025 06:52	01/02/2025 18:08	YR
							Certifications:	NELAC-NY12058,NJDEP-NY037		
107-13-1	Acrylonitrile	ND		ug/m³	3.81	1.351	EPA TO-15	01/02/2025 06:52	01/02/2025 18:08	YR
							Certifications:	NELAC-NY12058,NJDEP-NY037		
71-43-2	**Benzene**	**2.11**		ug/m³	0.432	1.351	EPA TO-15	01/02/2025 06:52	01/02/2025 18:08	YR
							Certifications:	NELAC-NY12058,NJDEP-NY037		
100-44-7	Benzyl chloride	ND		ug/m³	0.699	1.351	EPA TO-15	01/02/2025 06:52	01/02/2025 18:08	YR
							Certifications:	NELAC-NY12058,NJDEP-NY037		
75-27-4	Bromodichloromethane	ND		ug/m³	0.905	1.351	EPA TO-15	01/02/2025 06:52	01/02/2025 18:08	YR
							Certifications:	NELAC-NY12058,NJDEP-NY037		
75-25-2	Bromoform	ND	TO-CCV	ug/m³	1.40	1.351	EPA TO-15	01/02/2025 06:52	01/02/2025 18:08	YR
							Certifications:	NELAC-NY12058,NJDEP-NY037		
74-83-9	Bromomethane	ND		ug/m³	0.525	1.351	EPA TO-15	01/02/2025 06:52	01/02/2025 18:08	YR
							Certifications:	NELAC-NY12058,NJDEP-NY037		
75-15-0	Carbon disulfide	ND		ug/m³	0.421	1.351	EPA TO-15	01/02/2025 06:52	01/02/2025 18:08	YR
							Certifications:	NELAC-NY12058,NJDEP-NY037		
56-23-5	**Carbon tetrachloride**	**1.02**		ug/m³	0.212	1.351	EPA TO-15	01/02/2025 06:52	01/02/2025 18:08	YR
							Certifications:	NELAC-NY12058,NJDEP-NY037		
108-90-7	Chlorobenzene	ND		ug/m³	0.622	1.351	EPA TO-15	01/02/2025 06:52	01/02/2025 18:08	YR
							Certifications:	NELAC-NY12058,NJDEP-NY037		
75-00-3	Chloroethane	ND		ug/m³	0.356	1.351	EPA TO-15	01/02/2025 06:52	01/02/2025 18:08	YR
							Certifications:	NELAC-NY12058,NJDEP-NY037		
67-66-3	Chloroform	ND		ug/m³	0.660	1.351	EPA TO-15	01/02/2025 06:52	01/02/2025 18:08	YR
							Certifications:	NELAC-NY12058,NJDEP-NY037		
74-87-3	**Chloromethane**	**1.23**		ug/m³	0.279	1.351	EPA TO-15	01/02/2025 06:52	01/02/2025 18:08	YR
							Certifications:	NELAC-NY12058,NJDEP-NY037		
156-59-2	cis-1,2-Dichloroethylene	ND		ug/m³	0.268	1.351	EPA TO-15	01/02/2025 06:52	01/02/2025 18:08	YR
							Certifications:	NELAC-NY12058,NJDEP-NY037		
10061-01-5	cis-1,3-Dichloropropylene	ND		ug/m³	0.613	1.351	EPA TO-15	01/02/2025 06:52	01/02/2025 18:08	YR
							Certifications:	NELAC-NY12058,NJDEP-NY037		
110-82-7	**Cyclohexane**	**0.698**		ug/m³	0.465	1.351	EPA TO-15	01/02/2025 06:52	01/02/2025 18:08	YR
							Certifications:	NELAC-NY12058,NJDEP-NY037		
124-48-1	Dibromochloromethane	ND		ug/m³	1.15	1.351	EPA TO-15	01/02/2025 06:52	01/02/2025 18:08	YR
							Certifications:	NELAC-NY12058,NJDEP-NY037		
75-71-8	**Dichlorodifluoromethane**	**2.81**		ug/m³	0.668	1.351	EPA TO-15	01/02/2025 06:52	01/02/2025 18:08	YR
							Certifications:	NELAC-NY12058,NJDEP-NY037		
141-78-6	*** Ethyl acetate**	**1.90**		ug/m³	0.974	1.351	EPA TO-15	01/02/2025 06:52	01/02/2025 18:08	YR
							Certifications:			

Sample Information

Client Sample ID: EA01_122324 **York Sample ID:** 24L1600-06

York Project (SDG) No.	Client Project ID	Matrix	Collection Date/Time	Date Received
24L1600	170361307	Vapor Extraction	December 23, 2024 1:17 pm	12/23/2024

VOA, TO15 MASTER **Log-in Notes:** **Sample Notes:**

Sample Prepared by Method: EPA TO15 PREP

CAS No.	Parameter	Result	Flag	Units	Reported to LOQ	Dilution	Reference Method	Date/Time Prepared	Date/Time Analyzed	Analyst
100-41-4	**Ethyl Benzene**	**1.23**		ug/m³	0.587	1.351	EPA TO-15	01/02/2025 06:52	01/02/2025 18:08	YR
							Certifications: NELAC-NY12058,NJDEP-NY037			
87-68-3	Hexachlorobutadiene	ND		ug/m³	1.44	1.351	EPA TO-15	01/02/2025 06:52	01/02/2025 18:08	YR
							Certifications: NELAC-NY12058,NJDEP-NY037			
67-63-0	**Isopropanol**	**16.5**		ug/m³	1.99	1.351	EPA TO-15	01/02/2025 06:52	01/02/2025 18:08	YR
							Certifications: NELAC-NY12058,NJDEP-NY037			
80-62-6	**Methyl Methacrylate**	**0.664**		ug/m³	0.553	1.351	EPA TO-15	01/02/2025 06:52	01/02/2025 18:08	YR
							Certifications: NELAC-NY12058,NJDEP-NY037			
1634-04-4	Methyl tert-butyl ether (MTBE)	ND		ug/m³	0.487	1.351	EPA TO-15	01/02/2025 06:52	01/02/2025 18:08	YR
							Certifications: NELAC-NY12058,NJDEP-NY037			
75-09-2	Methylene chloride	ND		ug/m³	2.82	1.351	EPA TO-15	01/02/2025 06:52	01/02/2025 18:08	YR
							Certifications: NELAC-NY12058,NJDEP-NY037			
91-20-3	* Naphthalene	ND		ug/m³	1.42	1.351	EPA TO-15	01/02/2025 06:52	01/02/2025 18:08	YR
							Certifications: NJDEP-NY037			
142-82-5	**n-Heptane**	**1.22**		ug/m³	0.554	1.351	EPA TO-15	01/02/2025 06:52	01/02/2025 18:08	YR
							Certifications: NELAC-NY12058,NJDEP-NY037			
110-54-3	**n-Hexane**	**1.86**		ug/m³	0.476	1.351	EPA TO-15	01/02/2025 06:52	01/02/2025 18:08	YR
							Certifications: NELAC-NY12058,NJDEP-NY037			
95-47-6	**o-Xylene**	**1.58**		ug/m³	0.587	1.351	EPA TO-15	01/02/2025 06:52	01/02/2025 18:08	YR
							Certifications: NELAC-NY12058,NJDEP-NY037			
179601-23-1	**p- & m- Xylenes**	**4.58**		ug/m³	1.17	1.351	EPA TO-15	01/02/2025 06:52	01/02/2025 18:08	YR
							Certifications: NELAC-NY12058,NJDEP-NY037			
622-96-8	*** p-Ethyltoluene**	**0.930**		ug/m³	0.664	1.351	EPA TO-15	01/02/2025 06:52	01/02/2025 18:08	YR
							Certifications:			
115-07-1	*** Propylene**	**1.86**		ug/m³	0.233	1.351	EPA TO-15	01/02/2025 06:52	01/02/2025 18:08	YR
							Certifications:			
100-42-5	Styrene	ND		ug/m³	0.575	1.351	EPA TO-15	01/02/2025 06:52	01/02/2025 18:08	YR
							Certifications: NELAC-NY12058,NJDEP-NY037			
127-18-4	**Tetrachloroethylene**	**2.93**		ug/m³	0.916	1.351	EPA TO-15	01/02/2025 06:52	01/02/2025 18:08	YR
							Certifications: NELAC-NY12058,NJDEP-NY037			
109-99-9	*** Tetrahydrofuran**	**1.04**		ug/m³	0.797	1.351	EPA TO-15	01/02/2025 06:52	01/02/2025 18:08	YR
							Certifications:			
108-88-3	**Toluene**	**10.4**		ug/m³	0.509	1.351	EPA TO-15	01/02/2025 06:52	01/02/2025 18:08	YR
							Certifications: NELAC-NY12058,NJDEP-NY037			
156-60-5	trans-1,2-Dichloroethylene	ND		ug/m³	0.536	1.351	EPA TO-15	01/02/2025 06:52	01/02/2025 18:08	YR
							Certifications: NELAC-NY12058,NJDEP-NY037			
10061-02-6	trans-1,3-Dichloropropylene	ND		ug/m³	0.613	1.351	EPA TO-15	01/02/2025 06:52	01/02/2025 18:08	YR
							Certifications: NELAC-NY12058,NJDEP-NY037			
79-01-6	**Trichloroethylene**	**0.436**		ug/m³	0.182	1.351	EPA TO-15	01/02/2025 06:52	01/02/2025 18:08	YR
							Certifications: NELAC-NY12058,NJDEP-NY037			
75-69-4	**Trichlorofluoromethane (Freon 11)**	**1.82**		ug/m³	0.759	1.351	EPA TO-15	01/02/2025 06:52	01/02/2025 18:08	YR
							Certifications: NELAC-NY12058,NJDEP-NY037			
108-05-4	Vinyl acetate	ND	TO-LC S-L	ug/m³	0.476	1.351	EPA TO-15	01/02/2025 06:52	01/02/2025 18:08	YR
							Certifications: NELAC-NY12058,NJDEP-NY037			

Sample Information

Client Sample ID: EA01_122324 **York Sample ID:** 24L1600-06

York Project (SDG) No.	Client Project ID	Matrix	Collection Date/Time	Date Received
24L1600	170361307	Vapor Extraction	December 23, 2024 1:17 pm	12/23/2024

VOA, TO15 MASTER

Log-in Notes:

Sample Notes:

Sample Prepared by Method: EPA TO15 PREP

CAS No.	Parameter	Result	Flag	Units	Reported to LOQ	Dilution	Reference Method	Date/Time Prepared	Date/Time Analyzed	Analyst
593-60-2	Vinyl bromide	ND		ug/m³	0.591	1.351	EPA TO-15	01/02/2025 06:52	01/02/2025 18:08	YR
							Certifications:	NELAC-NY12058,NJDEP-NY037		
75-01-4	Vinyl Chloride	ND		ug/m³	0.173	1.351	EPA TO-15	01/02/2025 06:52	01/02/2025 18:08	YR
							Certifications:	NELAC-NY12058,NJDEP-NY037		

Analytical Batch Summary

Batch ID: BA50055 **Preparation Method:** EPA TO15 PREP **Prepared By:** BMC

YORK Sample ID	Client Sample ID	Preparation Date
24L1600-01	FD01_122324	12/31/24
24L1600-02	FD02_122324	12/31/24
24L1600-03	FD03_122324	12/31/24
24L1600-04	FD04_122324	12/31/24
24L1600-05	FD05_122324	12/31/24
BA50055-BLK1	Blank	12/31/24
BA50055-BS1	LCS	12/31/24

Batch ID: BA50082 **Preparation Method:** EPA TO15 PREP **Prepared By:** BMC

YORK Sample ID	Client Sample ID	Preparation Date
24L1600-02RE1	FD02_122324	01/02/25
24L1600-04RE1	FD04_122324	01/02/25
24L1600-06	EA01_122324	01/02/25
BA50082-BLK1	Blank	01/02/25
BA50082-BS1	LCS	01/02/25

Batch ID: BL41243 **Preparation Method:** EPA TO15 PREP **Prepared By:** YR

YORK Sample ID	Client Sample ID	Preparation Date
24L1337-02	CAN 49982 / FC 20446	12/17/24
24L1337-04	CAN 49574 / FC 21016	12/17/24
24L1337-07	CAN 20754 / FC 20234	12/17/24
BL41243-BLK1	Blank	12/17/24
BL41243-BS1	LCS	12/17/24

Batch ID: BL41400 **Preparation Method:** EPA TO15 PREP **Prepared By:** YR

YORK Sample ID	Client Sample ID	Preparation Date
24L1337-01	CAN 24108 / FC 20410	12/18/24
24L1337-03	CAN 43000 / FC 19393	12/18/24
BL41400-BLK1	Blank	12/18/24
BL41400-BS1	LCS	12/18/24

Batch ID: BL41484 **Preparation Method:** EPA TO15 PREP **Prepared By:** YR

YORK Sample ID	Client Sample ID	Preparation Date
24L1337-08	CAN 48292 / FC 21031	12/19/24
BL41484-BLK1	Blank	12/19/24
BL41484-BS1	LCS	12/19/24

Volatile Organic Compounds in Air by GC/MS - Quality Control Data

York Analytical Laboratories, Inc. - Stratford

Analyte	Result	Reporting Limit	Units	Spike Level	Source* Result	%REC	%REC Limits	Flag	RPD	RPD Limit	Flag
Batch BA50055 - EPA TO15 PREP											
Blank (BA50055-BLK1) Blank									Prepared & Analyzed: 12/31/2024		
1,1,1,2-Tetrachloroethane	ND	0.687	ug/m³								
1,1,1-Trichloroethane	ND	0.546	"								
1,1,2,2-Tetrachloroethane	ND	0.687	"								
1,1,2-Trichloro-1,2,2-trifluoroethane (Freon 113)	ND	0.766	"								
1,1,2-Trichloroethane	ND	0.546	"								
1,1-Dichloroethane	ND	0.405	"								
1,1-Dichloroethylene	ND	0.198	"								
1,2,4-Trichlorobenzene	ND	0.742	"								
1,2,4-Trimethylbenzene	ND	0.492	"								
1,2-Dibromoethane	ND	0.768	"								
1,2-Dichlorobenzene	ND	0.601	"								
1,2-Dichloroethane	ND	0.405	"								
1,2-Dichloropropane	ND	0.462	"								
1,2-Dichlorotetrafluoroethane	ND	0.699	"								
1,3,5-Trimethylbenzene	ND	0.492	"								
1,3-Butadiene	ND	0.664	"								
1,3-Dichlorobenzene	ND	0.601	"								
1,3-Dichloropropane	ND	0.462	"								
1,4-Dichlorobenzene	ND	0.601	"								
1,4-Dioxane	0.901	0.721	"								
2,2,4-Trimethylpentane	ND	0.234	"								
2-Butanone	ND	0.295	"								
2-Hexanone	ND	0.819	"								
3-Chloropropene	ND	1.57	"								
4-Methyl-2-pentanone	ND	0.410	"								
Acetone	ND	1.90	"								
Acrylonitrile	ND	2.82	"								
Benzene	ND	0.319	"								
Benzyl chloride	ND	0.518	"								
Bromodichloromethane	ND	0.670	"								
Bromoform	ND	1.03	"								
Bromomethane	ND	0.388	"								
Carbon disulfide	ND	0.311	"								
Carbon tetrachloride	ND	0.157	"								
Chlorobenzene	ND	0.460	"								
Chloroethane	ND	0.264	"								
Chloroform	ND	0.488	"								
Chloromethane	ND	0.207	"								
cis-1,2-Dichloroethylene	ND	0.198	"								
cis-1,3-Dichloropropylene	ND	0.454	"								
Cyclohexane	ND	0.344	"								
Dibromochloromethane	ND	0.852	"								
Dichlorodifluoromethane	ND	0.495	"								
Ethyl acetate	ND	0.721	"								
Ethyl Benzene	ND	0.434	"								
Hexachlorobutadiene	ND	1.07	"								
Isopropanol	ND	1.47	"								
Methyl Methacrylate	ND	0.409	"								
Methyl tert-butyl ether (MTBE)	ND	0.361	"								
Methylene chloride	ND	2.08	"								

Volatile Organic Compounds in Air by GC/MS - Quality Control Data

York Analytical Laboratories, Inc. - Stratford

Batch BA50055 - EPA TO15 PREP

Blank (BA50055-BLK1) Blank — Prepared & Analyzed: 12/31/2024

Analyte	Result	Reporting Limit	Units	Spike Level	Source* Result	%REC	%REC Limits	Flag	RPD	RPD Limit	Flag
Naphthalene	ND	1.05	ug/m³								
n-Heptane	ND	0.410	"								
n-Hexane	ND	0.352	"								
o-Xylene	ND	0.434	"								
p- & m- Xylenes	ND	0.868	"								
p-Ethyltoluene	ND	0.492	"								
Propylene	ND	0.172	"								
Styrene	ND	0.426	"								
Tetrachloroethylene	ND	0.678	"								
Tetrahydrofuran	ND	0.590	"								
Toluene	ND	0.377	"								
trans-1,2-Dichloroethylene	ND	0.396	"								
trans-1,3-Dichloropropylene	ND	0.454	"								
Trichloroethylene	ND	0.134	"								
Trichlorofluoromethane (Freon 11)	ND	0.562	"								
Vinyl acetate	ND	0.352	"								
Vinyl bromide	ND	0.437	"								
Vinyl Chloride	ND	0.128	"								

LCS (BA50055-BS1) LCS — Prepared & Analyzed: 12/31/2024

Analyte	Result	Reporting Limit	Units	Spike Level	Source* Result	%REC	%REC Limits	Flag	RPD	RPD Limit	Flag
1,1,1,2-Tetrachloroethane	10.3		ppbv	10.0		103	70-130				
1,1,1-Trichloroethane	11.4		"	10.0		114	70-130				
1,1,2,2-Tetrachloroethane	9.80		"	10.0		98.0	70-130				
1,1,2-Trichloro-1,2,2-trifluoroethane (Freon 113)	11.8		"	10.0		118	70-130				
1,1,2-Trichloroethane	10.5		"	10.0		105	70-130				
1,1-Dichloroethane	10.6		"	10.0		106	70-130				
1,1-Dichloroethylene	11.0		"	10.0		110	70-130				
1,2,4-Trichlorobenzene	11.4		"	10.0		114	70-130				
1,2,4-Trimethylbenzene	10.6		"	10.0		106	70-130				
1,2-Dibromoethane	10.2		"	10.0		102	70-130				
1,2-Dichlorobenzene	11.0		"	10.0		110	70-130				
1,2-Dichloroethane	0.00		"	10.0			70-130	Low Bias			
1,2-Dichloropropane	9.71		"	10.0		97.1	70-130				
1,2-Dichlorotetrafluoroethane	12.2		"	10.0		122	70-130				
1,3,5-Trimethylbenzene	10.1		"	10.0		101	70-130				
1,3-Butadiene	11.1		"	10.0		111	70-130				
1,3-Dichlorobenzene	11.1		"	10.0		111	70-130				
1,3-Dichloropropane	9.85		"	10.0		98.5	70-130				
1,4-Dichlorobenzene	11.3		"	10.0		113	70-130				
1,4-Dioxane	9.75		"	10.0		97.5	70-130				
2,2,4-Trimethylpentane	11.8		"	10.0		118	70-130				
2-Butanone	10.2		"	10.0		102	70-130				
2-Hexanone	10.0		"	10.0		100	70-130				
3-Chloropropene	10.1		"	10.0		101	70-130				
4-Methyl-2-pentanone	9.13		"	10.0		91.3	70-130				
Acetone	8.98		"	10.0		89.8	70-130				
Acrylonitrile	9.53		"	10.0		95.3	70-130				
Benzene	10.9		"	10.0		109	70-130				
Benzyl chloride	11.3		"	10.0		113	70-130				
Bromodichloromethane	9.95		"	10.0		99.5	70-130				
Bromoform	10.9		"	10.0		109	70-130				

Volatile Organic Compounds in Air by GC/MS - Quality Control Data

York Analytical Laboratories, Inc. - Stratford

Analyte	Result	Reporting Limit	Units	Spike Level	Source* Result	%REC	%REC Limits	Flag	RPD	RPD Limit	Flag
Batch BA50055 - EPA TO15 PREP											
LCS (BA50055-BS1) LCS							Prepared & Analyzed: 12/31/2024				
Bromomethane	11.6		ppbv	10.0		116	70-130				
Carbon disulfide	10.7		"	10.0		107	70-130				
Carbon tetrachloride	11.6		"	10.0		116	70-130				
Chlorobenzene	10.1		"	10.0		101	70-130				
Chloroethane	11.2		"	10.0		112	70-130				
Chloroform	11.2		"	10.0		112	70-130				
Chloromethane	10.2		"	10.0		102	70-130				
cis-1,2-Dichloroethylene	10.6		"	10.0		106	70-130				
cis-1,3-Dichloropropylene	10.0		"	10.0		100	70-130				
Cyclohexane	10.9		"	10.0		109	70-130				
Dibromochloromethane	10.6		"	10.0		106	70-130				
Dichlorodifluoromethane	11.3		"	10.0		113	70-130				
Ethyl acetate	12.4		"	10.0		124	70-130				
Ethyl Benzene	10.2		"	10.0		102	70-130				
Hexachlorobutadiene	11.5		"	10.0		115	70-130				
Isopropanol	8.96		"	10.0		89.6	70-130				
Methyl Methacrylate	9.75		"	10.0		97.5	70-130				
Methyl tert-butyl ether (MTBE)	11.2		"	10.0		112	70-130				
Methylene chloride	7.37		"	10.0		73.7	70-130				
Naphthalene	12.0		"	10.0		120	70-130				
n-Heptane	10.9		"	10.0		109	70-130				
n-Hexane	11.0		"	10.0		110	70-130				
o-Xylene	10.5		"	10.0		105	70-130				
p- & m- Xylenes	21.5		"	20.0		108	70-130				
p-Ethyltoluene	10.9		"	10.0		109	70-130				
Propylene	10.1		"	10.0		101	70-130				
Styrene	10.7		"	10.0		107	70-130				
Tetrachloroethylene	10.5		"	10.0		105	70-130				
Tetrahydrofuran	10.3		"	10.0		103	70-130				
Toluene	9.97		"	10.0		99.7	70-130				
trans-1,2-Dichloroethylene	10.9		"	10.0		109	70-130				
trans-1,3-Dichloropropylene	9.85		"	10.0		98.5	70-130				
Trichloroethylene	9.64		"	10.0		96.4	70-130				
Trichlorofluoromethane (Freon 11)	11.6		"	10.0		116	70-130				
Vinyl acetate	5.96		"	10.0		59.6	70-130	Low Bias			
Vinyl bromide	12.2		"	10.0		122	70-130				
Vinyl Chloride	10.9		"	10.0		109	70-130				

Volatile Organic Compounds in Air by GC/MS - Quality Control Data

York Analytical Laboratories, Inc. - Stratford

Analyte	Result	Reporting Limit	Units	Spike Level	Source* Result	%REC	%REC Limits	Flag	RPD	RPD Limit	Flag
Batch BA50082 - EPA TO15 PREP											
Blank (BA50082-BLK1) Blank									Prepared & Analyzed: 01/02/2025		
1,1,1,2-Tetrachloroethane	ND	0.687	ug/m³								
1,1,1-Trichloroethane	ND	0.546	"								
1,1,2,2-Tetrachloroethane	ND	0.687	"								
1,1,2-Trichloro-1,2,2-trifluoroethane (Freon 113)	ND	0.766	"								
1,1,2-Trichloroethane	ND	0.546	"								
1,1-Dichloroethane	ND	0.405	"								
1,1-Dichloroethylene	ND	0.198	"								
1,2,4-Trichlorobenzene	ND	0.742	"								
1,2,4-Trimethylbenzene	ND	0.492	"								
1,2-Dibromoethane	ND	0.768	"								
1,2-Dichlorobenzene	ND	0.601	"								
1,2-Dichloroethane	ND	0.405	"								
1,2-Dichloropropane	ND	0.462	"								
1,2-Dichlorotetrafluoroethane	ND	0.699	"								
1,3,5-Trimethylbenzene	ND	0.492	"								
1,3-Butadiene	ND	0.664	"								
1,3-Dichlorobenzene	ND	0.601	"								
1,3-Dichloropropane	ND	0.462	"								
1,4-Dichlorobenzene	ND	0.601	"								
1,4-Dioxane	1.19	0.721	"								
2,2,4-Trimethylpentane	ND	0.234	"								
2-Butanone	ND	0.295	"								
2-Hexanone	ND	0.819	"								
3-Chloropropene	ND	1.57	"								
4-Methyl-2-pentanone	ND	0.410	"								
Acetone	ND	1.90	"								
Acrylonitrile	ND	2.82	"								
Benzene	ND	0.319	"								
Benzyl chloride	ND	0.518	"								
Bromodichloromethane	ND	0.670	"								
Bromoform	ND	1.03	"								
Bromomethane	ND	0.388	"								
Carbon disulfide	ND	0.311	"								
Carbon tetrachloride	ND	0.157	"								
Chlorobenzene	ND	0.460	"								
Chloroethane	ND	0.264	"								
Chloroform	ND	0.488	"								
Chloromethane	ND	0.207	"								
cis-1,2-Dichloroethylene	ND	0.198	"								
cis-1,3-Dichloropropylene	ND	0.454	"								
Cyclohexane	ND	0.344	"								
Dibromochloromethane	ND	0.852	"								
Dichlorodifluoromethane	ND	0.495	"								
Ethyl acetate	ND	0.721	"								
Ethyl Benzene	ND	0.434	"								
Hexachlorobutadiene	ND	1.07	"								
Isopropanol	ND	1.47	"								
Methyl Methacrylate	ND	0.409	"								
Methyl tert-butyl ether (MTBE)	ND	0.361	"								
Methylene chloride	ND	2.08	"								
Naphthalene	ND	1.05	"								

Volatile Organic Compounds in Air by GC/MS - Quality Control Data

York Analytical Laboratories, Inc. - Stratford

Analyte	Result	Reporting Limit	Units	Spike Level	Source* Result	%REC	%REC Limits	Flag	RPD	RPD Limit	Flag
Batch BA50082 - EPA TO15 PREP											
Blank (BA50082-BLK1) Blank								Prepared & Analyzed: 01/02/2025			
n-Heptane	ND	0.410	ug/m³								
n-Hexane	ND	0.352	"								
o-Xylene	ND	0.434	"								
p- & m- Xylenes	ND	0.868	"								
p-Ethyltoluene	ND	0.492	"								
Propylene	ND	0.172	"								
Styrene	ND	0.426	"								
Tetrachloroethylene	ND	0.678	"								
Tetrahydrofuran	ND	0.590	"								
Toluene	ND	0.377	"								
trans-1,2-Dichloroethylene	ND	0.396	"								
trans-1,3-Dichloropropylene	ND	0.454	"								
Trichloroethylene	ND	0.134	"								
Trichlorofluoromethane (Freon 11)	ND	0.562	"								
Vinyl acetate	ND	0.352	"								
Vinyl bromide	ND	0.437	"								
Vinyl Chloride	ND	0.128	"								
LCS (BA50082-BS1) LCS								Prepared & Analyzed: 01/02/2025			
1,1,1,2-Tetrachloroethane	10.3		ppbv	10.0		103	70-130				
1,1,1-Trichloroethane	10.7		"	10.0		107	70-130				
1,1,2,2-Tetrachloroethane	10.2		"	10.0		102	70-130				
1,1,2-Trichloro-1,2,2-trifluoroethane (Freon 113)	10.9		"	10.0		109	70-130				
1,1,2-Trichloroethane	10.4		"	10.0		104	70-130				
1,1-Dichloroethane	10.2		"	10.0		102	70-130				
1,1-Dichloroethylene	10.6		"	10.0		106	70-130				
1,2,4-Trichlorobenzene	11.4		"	10.0		114	70-130				
1,2,4-Trimethylbenzene	11.0		"	10.0		110	70-130				
1,2-Dibromoethane	10.0		"	10.0		100	70-130				
1,2-Dichlorobenzene	11.1		"	10.0		111	70-130				
1,2-Dichloroethane	9.58		"	10.0		95.8	70-130				
1,2-Dichloropropane	9.99		"	10.0		99.9	70-130				
1,2-Dichlorotetrafluoroethane	11.5		"	10.0		115	70-130				
1,3,5-Trimethylbenzene	10.9		"	10.0		109	70-130				
1,3-Butadiene	10.9		"	10.0		109	70-130				
1,3-Dichlorobenzene	11.2		"	10.0		112	70-130				
1,3-Dichloropropane	9.96		"	10.0		99.6	70-130				
1,4-Dichlorobenzene	11.4		"	10.0		114	70-130				
1,4-Dioxane	9.77		"	10.0		97.7	70-130				
2,2,4-Trimethylpentane	11.5		"	10.0		115	70-130				
2-Butanone	10.3		"	10.0		103	70-130				
2-Hexanone	10.7		"	10.0		107	70-130				
3-Chloropropene	10.1		"	10.0		101	70-130				
4-Methyl-2-pentanone	9.79		"	10.0		97.9	70-130				
Acetone	9.03		"	10.0		90.3	70-130				
Acrylonitrile	9.38		"	10.0		93.8	70-130				
Benzene	10.3		"	10.0		103	70-130				
Benzyl chloride	11.4		"	10.0		114	70-130				
Bromodichloromethane	10.1		"	10.0		101	70-130				
Bromoform	10.8		"	10.0		108	70-130				
Bromomethane	10.7		"	10.0		107	70-130				

Volatile Organic Compounds in Air by GC/MS - Quality Control Data

York Analytical Laboratories, Inc. - Stratford

Analyte	Result	Reporting Limit	Units	Spike Level	Source* Result	%REC	%REC Limits	Flag	RPD	RPD Limit	Flag
Batch BA50082 - EPA TO15 PREP											
LCS (BA50082-BS1) LCS							Prepared & Analyzed: 01/02/2025				
Carbon disulfide	10.2		ppbv	10.0		102	70-130				
Carbon tetrachloride	10.8		"	10.0		108	70-130				
Chlorobenzene	10.2		"	10.0		102	70-130				
Chloroethane	10.7		"	10.0		107	70-130				
Chloroform	10.5		"	10.0		105	70-130				
Chloromethane	10.0		"	10.0		100	70-130				
cis-1,2-Dichloroethylene	10.2		"	10.0		102	70-130				
cis-1,3-Dichloropropylene	10.2		"	10.0		102	70-130				
Cyclohexane	10.7		"	10.0		107	70-130				
Dibromochloromethane	10.3		"	10.0		103	70-130				
Dichlorodifluoromethane	10.8		"	10.0		108	70-130				
Ethyl acetate	12.5		"	10.0		125	70-130				
Ethyl Benzene	10.5		"	10.0		105	70-130				
Hexachlorobutadiene	11.6		"	10.0		116	70-130				
Isopropanol	8.94		"	10.0		89.4	70-130				
Methyl Methacrylate	9.97		"	10.0		99.7	70-130				
Methyl tert-butyl ether (MTBE)	10.7		"	10.0		107	70-130				
Methylene chloride	7.20		"	10.0		72.0	70-130				
Naphthalene	12.2		"	10.0		122	70-130				
n-Heptane	11.0		"	10.0		110	70-130				
n-Hexane	10.7		"	10.0		107	70-130				
o-Xylene	10.9		"	10.0		109	70-130				
p- & m- Xylenes	22.3		"	20.0		112	70-130				
p-Ethyltoluene	10.8		"	10.0		108	70-130				
Propylene	10.2		"	10.0		102	70-130				
Styrene	11.0		"	10.0		110	70-130				
Tetrachloroethylene	9.98		"	10.0		99.8	70-130				
Tetrahydrofuran	10.3		"	10.0		103	70-130				
Toluene	10.0		"	10.0		100	70-130				
trans-1,2-Dichloroethylene	10.5		"	10.0		105	70-130				
trans-1,3-Dichloropropylene	10.1		"	10.0		101	70-130				
Trichloroethylene	9.61		"	10.0		96.1	70-130				
Trichlorofluoromethane (Freon 11)	10.8		"	10.0		108	70-130				
Vinyl acetate	5.92		"	10.0		59.2	70-130	Low Bias			
Vinyl bromide	11.2		"	10.0		112	70-130				
Vinyl Chloride	10.6		"	10.0		106	70-130				

Volatile Organic Compounds in Air by GC/MS - Quality Control Data

York Analytical Laboratories, Inc. - Stratford

Analyte	Result	Reporting Limit	Units	Spike Level	Source* Result	%REC	%REC Limits	Flag	RPD	RPD Limit	Flag
Batch BL41243 - EPA TO15 PREP											
Blank (BL41243-BLK1) Blank									Prepared & Analyzed: 12/17/2024		
1,1,1,2-Tetrachloroethane	ND	0.687	ug/m³								
1,1,1-Trichloroethane	ND	0.546	"								
1,1,2,2-Tetrachloroethane	ND	0.687	"								
1,1,2-Trichloro-1,2,2-trifluoroethane (Freon 113)	ND	0.766	"								
1,1,2-Trichloroethane	ND	0.546	"								
1,1-Dichloroethane	ND	0.405	"								
1,1-Dichloroethylene	ND	0.198	"								
1,2,4-Trichlorobenzene	ND	0.742	"								
1,2,4-Trimethylbenzene	ND	0.492	"								
1,2-Dibromoethane	ND	0.768	"								
1,2-Dichlorobenzene	ND	0.601	"								
1,2-Dichloroethane	ND	0.405	"								
1,2-Dichloropropane	ND	0.462	"								
1,2-Dichlorotetrafluoroethane	ND	0.699	"								
1,3,5-Trimethylbenzene	ND	0.492	"								
1,3-Butadiene	ND	0.664	"								
1,3-Dichlorobenzene	ND	0.601	"								
1,3-Dichloropropane	ND	0.462	"								
1,4-Dichlorobenzene	ND	0.601	"								
1,4-Dioxane	ND	0.721	"								
2,2,4-Trimethylpentane	ND	0.234	"								
2-Butanone	ND	0.295	"								
2-Hexanone	ND	0.819	"								
3-Chloropropene	ND	1.57	"								
4-Methyl-2-pentanone	ND	0.410	"								
Acetone	ND	1.90	"								
Acrylonitrile	ND	2.82	"								
Benzene	ND	0.319	"								
Benzyl chloride	ND	0.518	"								
Bromodichloromethane	ND	0.670	"								
Bromoform	ND	1.03	"								
Bromomethane	ND	0.388	"								
Carbon disulfide	ND	0.311	"								
Carbon tetrachloride	ND	0.157	"								
Chlorobenzene	ND	0.460	"								
Chloroethane	ND	0.264	"								
Chloroform	ND	0.488	"								
Chloromethane	ND	0.207	"								
cis-1,2-Dichloroethylene	ND	0.198	"								
cis-1,3-Dichloropropylene	ND	0.454	"								
Cyclohexane	ND	0.344	"								
Dibromochloromethane	ND	0.852	"								
Dichlorodifluoromethane	ND	0.495	"								
Ethyl acetate	ND	0.721	"								
Ethyl Benzene	ND	0.434	"								
Hexachlorobutadiene	ND	1.07	"								
Isopropanol	ND	1.47	"								
Methyl Methacrylate	ND	0.409	"								
Methyl tert-butyl ether (MTBE)	ND	0.361	"								
Methylene chloride	ND	2.08	"								
Naphthalene	ND	1.05	"								

Volatile Organic Compounds in Air by GC/MS - Quality Control Data

York Analytical Laboratories, Inc. - Stratford

Analyte	Result	Reporting Limit	Units	Spike Level	Source* Result	%REC	%REC Limits	Flag	RPD	RPD Limit	Flag
Batch BL41243 - EPA TO15 PREP											
Blank (BL41243-BLK1) Blank								Prepared & Analyzed: 12/17/2024			
n-Heptane	ND	0.410	ug/m³								
n-Hexane	ND	0.352	"								
o-Xylene	ND	0.434	"								
p- & m- Xylenes	ND	0.868	"								
p-Ethyltoluene	ND	0.492	"								
Propylene	ND	0.172	"								
Styrene	ND	0.426	"								
Tetrachloroethylene	ND	0.678	"								
Tetrahydrofuran	ND	0.590	"								
Toluene	ND	0.377	"								
trans-1,2-Dichloroethylene	ND	0.396	"								
trans-1,3-Dichloropropylene	ND	0.454	"								
Trichloroethylene	ND	0.134	"								
Trichlorofluoromethane (Freon 11)	ND	0.562	"								
Vinyl acetate	ND	0.352	"								
Vinyl bromide	ND	0.437	"								
Vinyl Chloride	ND	0.128	"								
LCS (BL41243-BS1) LCS								Prepared & Analyzed: 12/17/2024			
1,1,1,2-Tetrachloroethane	8.98		ppbv	10.0		89.8	70-130				
1,1,1-Trichloroethane	8.79		"	10.0		87.9	70-130				
1,1,2,2-Tetrachloroethane	9.02		"	10.0		90.2	70-130				
1,1,2-Trichloro-1,2,2-trifluoroethane (Freon 113)	8.19		"	10.0		81.9	70-130				
1,1,2-Trichloroethane	9.83		"	10.0		98.3	70-130				
1,1-Dichloroethane	8.11		"	10.0		81.1	70-130				
1,1-Dichloroethylene	8.44		"	10.0		84.4	70-130				
1,2,4-Trichlorobenzene	8.02		"	10.0		80.2	70-130				
1,2,4-Trimethylbenzene	9.73		"	10.0		97.3	70-130				
1,2-Dibromoethane	9.36		"	10.0		93.6	70-130				
1,2-Dichlorobenzene	9.49		"	10.0		94.9	70-130				
1,2-Dichloroethane	9.04		"	10.0		90.4	70-130				
1,2-Dichloropropane	9.57		"	10.0		95.7	70-130				
1,2-Dichlorotetrafluoroethane	6.99		"	10.0		69.9	70-130	Low Bias			
1,3,5-Trimethylbenzene	9.60		"	10.0		96.0	70-130				
1,3-Butadiene	8.68		"	10.0		86.8	70-130				
1,3-Dichlorobenzene	9.62		"	10.0		96.2	70-130				
1,3-Dichloropropane	9.28		"	10.0		92.8	70-130				
1,4-Dichlorobenzene	9.50		"	10.0		95.0	70-130				
1,4-Dioxane	8.68		"	10.0		86.8	70-130				
2,2,4-Trimethylpentane	8.76		"	10.0		87.6	70-130				
2-Butanone	8.52		"	10.0		85.2	70-130				
2-Hexanone	11.2		"	10.0		112	70-130				
3-Chloropropene	8.57		"	10.0		85.7	70-130				
4-Methyl-2-pentanone	10.4		"	10.0		104	70-130				
Acetone	8.77		"	10.0		87.7	70-130				
Acrylonitrile	7.76		"	10.0		77.6	70-130				
Benzene	7.83		"	10.0		78.3	70-130				
Benzyl chloride	10.7		"	10.0		107	70-130				
Bromodichloromethane	9.69		"	10.0		96.9	70-130				
Bromoform	2.85		"	10.0		28.5	70-130	Low Bias			
Bromomethane	4.25		"	10.0		42.5	70-130	Low Bias			

Volatile Organic Compounds in Air by GC/MS - Quality Control Data

York Analytical Laboratories, Inc. - Stratford

Analyte	Result	Reporting Limit	Units	Spike Level	Source* Result	%REC	%REC Limits	Flag	RPD	RPD Limit	Flag
Batch BL41243 - EPA TO15 PREP											
LCS (BL41243-BS1) LCS							Prepared & Analyzed: 12/17/2024				
Carbon disulfide	7.77		ppbv	10.0		77.7	70-130				
Carbon tetrachloride	8.82		"	10.0		88.2	70-130				
Chlorobenzene	8.45		"	10.0		84.5	70-130				
Chloroethane	6.69		"	10.0		66.9	70-130	Low Bias			
Chloroform	8.25		"	10.0		82.5	70-130				
Chloromethane	8.14		"	10.0		81.4	70-130				
cis-1,2-Dichloroethylene	7.40		"	10.0		74.0	70-130				
cis-1,3-Dichloropropylene	9.53		"	10.0		95.3	70-130				
Cyclohexane	8.03		"	10.0		80.3	70-130				
Dibromochloromethane	7.15		"	10.0		71.5	70-130				
Dichlorodifluoromethane	9.59		"	10.0		95.9	70-130				
Ethyl acetate	10.1		"	10.0		101	70-130				
Ethyl Benzene	8.85		"	10.0		88.5	70-130				
Hexachlorobutadiene	9.11		"	10.0		91.1	70-130				
Isopropanol	7.70		"	10.0		77.0	70-130				
Methyl Methacrylate	9.71		"	10.0		97.1	70-130				
Methyl tert-butyl ether (MTBE)	7.84		"	10.0		78.4	70-130				
Methylene chloride	6.43		"	10.0		64.3	70-130	Low Bias			
Naphthalene	9.01		"	10.0		90.1	70-130				
n-Heptane	9.00		"	10.0		90.0	70-130				
n-Hexane	8.17		"	10.0		81.7	70-130				
o-Xylene	9.28		"	10.0		92.8	70-130				
p- & m- Xylenes	20.2		"	20.0		101	70-130				
p-Ethyltoluene	9.47		"	10.0		94.7	70-130				
Propylene	9.51		"	10.0		95.1	70-130				
Styrene	9.52		"	10.0		95.2	70-130				
Tetrachloroethylene	9.35		"	10.0		93.5	70-130				
Tetrahydrofuran	8.29		"	10.0		82.9	70-130				
Toluene	9.16		"	10.0		91.6	70-130				
trans-1,2-Dichloroethylene	8.30		"	10.0		83.0	70-130				
trans-1,3-Dichloropropylene	9.73		"	10.0		97.3	70-130				
Trichloroethylene	8.96		"	10.0		89.6	70-130				
Trichlorofluoromethane (Freon 11)	9.15		"	10.0		91.5	70-130				
Vinyl acetate	4.61		"	10.0		46.1	70-130	Low Bias			
Vinyl bromide	8.03		"	10.0		80.3	70-130				
Vinyl Chloride	7.84		"	10.0		78.4	70-130				

Volatile Organic Compounds in Air by GC/MS - Quality Control Data

York Analytical Laboratories, Inc. - Stratford

Analyte	Result	Reporting Limit	Units	Spike Level	Source* Result	%REC	%REC Limits	Flag	RPD	RPD Limit	Flag
Batch BL41400 - EPA TO15 PREP											
Blank (BL41400-BLK1) Blank									Prepared & Analyzed: 12/18/2024		
1,1,1,2-Tetrachloroethane	ND	0.687	ug/m³								
1,1,1-Trichloroethane	ND	0.546	"								
1,1,2,2-Tetrachloroethane	ND	0.687	"								
1,1,2-Trichloro-1,2,2-trifluoroethane (Freon 113)	ND	0.766	"								
1,1,2-Trichloroethane	ND	0.546	"								
1,1-Dichloroethane	ND	0.405	"								
1,1-Dichloroethylene	ND	0.198	"								
1,2,4-Trichlorobenzene	ND	0.742	"								
1,2,4-Trimethylbenzene	ND	0.492	"								
1,2-Dibromoethane	ND	0.768	"								
1,2-Dichlorobenzene	ND	0.601	"								
1,2-Dichloroethane	ND	0.405	"								
1,2-Dichloropropane	ND	0.462	"								
1,2-Dichlorotetrafluoroethane	ND	0.699	"								
1,3,5-Trimethylbenzene	ND	0.492	"								
1,3-Butadiene	ND	0.664	"								
1,3-Dichlorobenzene	ND	0.601	"								
1,3-Dichloropropane	ND	0.462	"								
1,4-Dichlorobenzene	ND	0.601	"								
1,4-Dioxane	ND	0.721	"								
2,2,4-Trimethylpentane	ND	0.234	"								
2-Butanone	ND	0.295	"								
2-Hexanone	ND	0.819	"								
3-Chloropropene	ND	1.57	"								
4-Methyl-2-pentanone	ND	0.410	"								
Acetone	ND	1.90	"								
Acrylonitrile	ND	2.82	"								
Benzene	ND	0.319	"								
Benzyl chloride	ND	0.518	"								
Bromodichloromethane	ND	0.670	"								
Bromoform	ND	1.03	"								
Bromomethane	ND	0.388	"								
Carbon disulfide	ND	0.311	"								
Carbon tetrachloride	ND	0.157	"								
Chlorobenzene	ND	0.460	"								
Chloroethane	ND	0.264	"								
Chloroform	ND	0.488	"								
Chloromethane	ND	0.207	"								
cis-1,2-Dichloroethylene	ND	0.198	"								
cis-1,3-Dichloropropylene	ND	0.454	"								
Cyclohexane	ND	0.344	"								
Dibromochloromethane	ND	0.852	"								
Dichlorodifluoromethane	ND	0.495	"								
Ethyl acetate	ND	0.721	"								
Ethyl Benzene	ND	0.434	"								
Hexachlorobutadiene	ND	1.07	"								
Isopropanol	ND	1.47	"								
Methyl Methacrylate	ND	0.409	"								
Methyl tert-butyl ether (MTBE)	ND	0.361	"								
Methylene chloride	ND	2.08	"								
Naphthalene	ND	1.05	"								

Volatile Organic Compounds in Air by GC/MS - Quality Control Data

York Analytical Laboratories, Inc. - Stratford

Analyte	Result	Reporting Limit	Units	Spike Level	Source* Result	%REC	%REC Limits	Flag	RPD	RPD Limit	Flag
Batch BL41400 - EPA TO15 PREP											
Blank (BL41400-BLK1) Blank								Prepared & Analyzed: 12/18/2024			
n-Heptane	ND	0.410	ug/m³								
n-Hexane	ND	0.352	"								
o-Xylene	ND	0.434	"								
p- & m- Xylenes	ND	0.868	"								
p-Ethyltoluene	ND	0.492	"								
Propylene	ND	0.172	"								
Styrene	ND	0.426	"								
Tetrachloroethylene	ND	0.678	"								
Tetrahydrofuran	ND	0.590	"								
Toluene	ND	0.377	"								
trans-1,2-Dichloroethylene	ND	0.396	"								
trans-1,3-Dichloropropylene	ND	0.454	"								
Trichloroethylene	ND	0.134	"								
Trichlorofluoromethane (Freon 11)	ND	0.562	"								
Vinyl acetate	ND	0.352	"								
Vinyl bromide	ND	0.437	"								
Vinyl Chloride	ND	0.128	"								
LCS (BL41400-BS1) LCS								Prepared & Analyzed: 12/18/2024			
1,1,1,2-Tetrachloroethane	9.17		ppbv	10.0		91.7	70-130				
1,1,1-Trichloroethane	9.00		"	10.0		90.0	70-130				
1,1,2,2-Tetrachloroethane	9.31		"	10.0		93.1	70-130				
1,1,2-Trichloro-1,2,2-trifluoroethane (Freon 113)	8.41		"	10.0		84.1	70-130				
1,1,2-Trichloroethane	10.2		"	10.0		102	70-130				
1,1-Dichloroethane	8.33		"	10.0		83.3	70-130				
1,1-Dichloroethylene	8.58		"	10.0		85.8	70-130				
1,2,4-Trichlorobenzene	7.77		"	10.0		77.7	70-130				
1,2,4-Trimethylbenzene	10.0		"	10.0		100	70-130				
1,2-Dibromoethane	9.67		"	10.0		96.7	70-130				
1,2-Dichlorobenzene	9.87		"	10.0		98.7	70-130				
1,2-Dichloroethane	9.28		"	10.0		92.8	70-130				
1,2-Dichloropropane	9.97		"	10.0		99.7	70-130				
1,2-Dichlorotetrafluoroethane	7.11		"	10.0		71.1	70-130				
1,3,5-Trimethylbenzene	9.77		"	10.0		97.7	70-130				
1,3-Butadiene	9.06		"	10.0		90.6	70-130				
1,3-Dichlorobenzene	10.1		"	10.0		101	70-130				
1,3-Dichloropropane	9.67		"	10.0		96.7	70-130				
1,4-Dichlorobenzene	10.0		"	10.0		100	70-130				
1,4-Dioxane	8.97		"	10.0		89.7	70-130				
2,2,4-Trimethylpentane	8.95		"	10.0		89.5	70-130				
2-Butanone	8.71		"	10.0		87.1	70-130				
2-Hexanone	11.5		"	10.0		115	70-130				
3-Chloropropene	8.68		"	10.0		86.8	70-130				
4-Methyl-2-pentanone	10.8		"	10.0		108	70-130				
Acetone	9.02		"	10.0		90.2	70-130				
Acrylonitrile	7.92		"	10.0		79.2	70-130				
Benzene	8.05		"	10.0		80.5	70-130				
Benzyl chloride	10.8		"	10.0		108	70-130				
Bromodichloromethane	10.1		"	10.0		101	70-130				
Bromoform	2.94		"	10.0		29.4	70-130	Low Bias			
Bromomethane	4.70		"	10.0		47.0	70-130	Low Bias			

Volatile Organic Compounds in Air by GC/MS - Quality Control Data

York Analytical Laboratories, Inc. - Stratford

Analyte	Result	Reporting Limit	Units	Spike Level	Source* Result	%REC	%REC Limits	Flag	RPD	RPD Limit	Flag
Batch BL41400 - EPA TO15 PREP											
LCS (BL41400-BS1) LCS							Prepared & Analyzed: 12/18/2024				
Carbon disulfide	8.00		ppbv	10.0		80.0	70-130				
Carbon tetrachloride	9.00		"	10.0		90.0	70-130				
Chlorobenzene	8.66		"	10.0		86.6	70-130				
Chloroethane	7.62		"	10.0		76.2	70-130				
Chloroform	8.49		"	10.0		84.9	70-130				
Chloromethane	8.45		"	10.0		84.5	70-130				
cis-1,2-Dichloroethylene	7.54		"	10.0		75.4	70-130				
cis-1,3-Dichloropropylene	9.91		"	10.0		99.1	70-130				
Cyclohexane	8.17		"	10.0		81.7	70-130				
Dibromochloromethane	7.36		"	10.0		73.6	70-130				
Dichlorodifluoromethane	9.70		"	10.0		97.0	70-130				
Ethyl acetate	10.4		"	10.0		104	70-130				
Ethyl Benzene	9.12		"	10.0		91.2	70-130				
Hexachlorobutadiene	9.15		"	10.0		91.5	70-130				
Isopropanol	7.81		"	10.0		78.1	70-130				
Methyl Methacrylate	10.1		"	10.0		101	70-130				
Methyl tert-butyl ether (MTBE)	7.90		"	10.0		79.0	70-130				
Methylene chloride	6.60		"	10.0		66.0	70-130	Low Bias			
Naphthalene	8.84		"	10.0		88.4	70-130				
n-Heptane	9.25		"	10.0		92.5	70-130				
n-Hexane	8.36		"	10.0		83.6	70-130				
o-Xylene	9.54		"	10.0		95.4	70-130				
p- & m- Xylenes	20.8		"	20.0		104	70-130				
p-Ethyltoluene	9.88		"	10.0		98.8	70-130				
Propylene	9.52		"	10.0		95.2	70-130				
Styrene	9.89		"	10.0		98.9	70-130				
Tetrachloroethylene	9.64		"	10.0		96.4	70-130				
Tetrahydrofuran	8.44		"	10.0		84.4	70-130				
Toluene	9.49		"	10.0		94.9	70-130				
trans-1,2-Dichloroethylene	8.55		"	10.0		85.5	70-130				
trans-1,3-Dichloropropylene	10.2		"	10.0		102	70-130				
Trichloroethylene	9.22		"	10.0		92.2	70-130				
Trichlorofluoromethane (Freon 11)	9.39		"	10.0		93.9	70-130				
Vinyl acetate	4.85		"	10.0		48.5	70-130	Low Bias			
Vinyl bromide	8.25		"	10.0		82.5	70-130				
Vinyl Chloride	8.10		"	10.0		81.0	70-130				

Volatile Organic Compounds in Air by GC/MS - Quality Control Data

York Analytical Laboratories, Inc. - Stratford

Analyte	Result	Reporting Limit	Units	Spike Level	Source* Result	%REC	%REC Limits	Flag	RPD	RPD Limit	Flag
Batch BL41484 - EPA TO15 PREP											
Blank (BL41484-BLK1) Blank									Prepared & Analyzed: 12/19/2024		
1,1,1,2-Tetrachloroethane	ND	0.687	ug/m³								
1,1,1-Trichloroethane	ND	0.546	"								
1,1,2,2-Tetrachloroethane	ND	0.687	"								
1,1,2-Trichloro-1,2,2-trifluoroethane (Freon 113)	ND	0.766	"								
1,1,2-Trichloroethane	ND	0.546	"								
1,1-Dichloroethane	ND	0.405	"								
1,1-Dichloroethylene	ND	0.198	"								
1,2,4-Trichlorobenzene	ND	0.742	"								
1,2,4-Trimethylbenzene	ND	0.492	"								
1,2-Dibromoethane	ND	0.768	"								
1,2-Dichlorobenzene	ND	0.601	"								
1,2-Dichloroethane	ND	0.405	"								
1,2-Dichloropropane	ND	0.462	"								
1,2-Dichlorotetrafluoroethane	ND	0.699	"								
1,3,5-Trimethylbenzene	ND	0.492	"								
1,3-Butadiene	ND	0.664	"								
1,3-Dichlorobenzene	ND	0.601	"								
1,3-Dichloropropane	ND	0.462	"								
1,4-Dichlorobenzene	ND	0.601	"								
1,4-Dioxane	ND	0.721	"								
2,2,4-Trimethylpentane	ND	0.234	"								
2-Butanone	ND	0.295	"								
2-Hexanone	ND	0.819	"								
3-Chloropropene	ND	1.57	"								
4-Methyl-2-pentanone	ND	0.410	"								
Acetone	ND	1.90	"								
Acrylonitrile	ND	2.82	"								
Benzene	ND	0.319	"								
Benzyl chloride	ND	0.518	"								
Bromodichloromethane	ND	0.670	"								
Bromoform	ND	1.03	"								
Bromomethane	ND	0.388	"								
Carbon disulfide	ND	0.311	"								
Carbon tetrachloride	ND	0.157	"								
Chlorobenzene	ND	0.460	"								
Chloroethane	ND	0.264	"								
Chloroform	ND	0.488	"								
Chloromethane	ND	0.207	"								
cis-1,2-Dichloroethylene	ND	0.198	"								
cis-1,3-Dichloropropylene	ND	0.454	"								
Cyclohexane	ND	0.344	"								
Dibromochloromethane	ND	0.852	"								
Dichlorodifluoromethane	ND	0.495	"								
Ethyl acetate	ND	0.721	"								
Ethyl Benzene	ND	0.434	"								
Hexachlorobutadiene	ND	1.07	"								
Isopropanol	ND	1.47	"								
Methyl Methacrylate	ND	0.409	"								
Methyl tert-butyl ether (MTBE)	ND	0.361	"								
Methylene chloride	ND	2.08	"								
Naphthalene	ND	1.05	"								

Volatile Organic Compounds in Air by GC/MS - Quality Control Data

York Analytical Laboratories, Inc. - Stratford

Analyte	Result	Reporting Limit	Units	Spike Level	Source* Result	%REC	%REC Limits	Flag	RPD	RPD Limit	Flag
Batch BL41484 - EPA TO15 PREP											
Blank (BL41484-BLK1) Blank									Prepared & Analyzed: 12/19/2024		
n-Heptane	ND	0.410	ug/m³								
n-Hexane	ND	0.352	"								
o-Xylene	ND	0.434	"								
p- & m- Xylenes	ND	0.868	"								
p-Ethyltoluene	ND	0.492	"								
Propylene	ND	0.172	"								
Styrene	ND	0.426	"								
Tetrachloroethylene	ND	0.678	"								
Tetrahydrofuran	ND	0.590	"								
Toluene	ND	0.377	"								
trans-1,2-Dichloroethylene	ND	0.396	"								
trans-1,3-Dichloropropylene	ND	0.454	"								
Trichloroethylene	ND	0.134	"								
Trichlorofluoromethane (Freon 11)	ND	0.562	"								
Vinyl acetate	ND	0.352	"								
Vinyl bromide	ND	0.437	"								
Vinyl Chloride	ND	0.128	"								
LCS (BL41484-BS1) LCS									Prepared & Analyzed: 12/19/2024		
1,1,1,2-Tetrachloroethane	11.0		ppbv	10.0		110	70-130				
1,1,1-Trichloroethane	11.2		"	10.0		112	70-130				
1,1,2,2-Tetrachloroethane	12.0		"	10.0		120	70-130				
1,1,2-Trichloro-1,2,2-trifluoroethane (Freon 113)	11.2		"	10.0		112	70-130				
1,1,2-Trichloroethane	11.5		"	10.0		115	70-130				
1,1-Dichloroethane	10.9		"	10.0		109	70-130				
1,1-Dichloroethylene	11.3		"	10.0		113	70-130				
1,2,4-Trichlorobenzene	10.5		"	10.0		105	70-130				
1,2,4-Trimethylbenzene	11.7		"	10.0		117	70-130				
1,2-Dibromoethane	11.8		"	10.0		118	70-130				
1,2-Dichlorobenzene	12.0		"	10.0		120	70-130				
1,2-Dichloroethane	11.1		"	10.0		111	70-130				
1,2-Dichloropropane	11.4		"	10.0		114	70-130				
1,2-Dichlorotetrafluoroethane	10.7		"	10.0		107	70-130				
1,3,5-Trimethylbenzene	11.5		"	10.0		115	70-130				
1,3-Butadiene	10.2		"	10.0		102	70-130				
1,3-Dichlorobenzene	11.7		"	10.0		117	70-130				
1,3-Dichloropropane	11.4		"	10.0		114	70-130				
1,4-Dichlorobenzene	12.0		"	10.0		120	70-130				
1,4-Dioxane	11.1		"	10.0		111	70-130				
2,2,4-Trimethylpentane	12.0		"	10.0		120	70-130				
2-Butanone	11.3		"	10.0		113	70-130				
2-Hexanone	11.4		"	10.0		114	70-130				
3-Chloropropene	11.4		"	10.0		114	70-130				
4-Methyl-2-pentanone	11.4		"	10.0		114	70-130				
Acetone	9.61		"	10.0		96.1	70-130				
Acrylonitrile	11.2		"	10.0		112	70-130				
Benzene	10.9		"	10.0		109	70-130				
Benzyl chloride	11.6		"	10.0		116	70-130				
Bromodichloromethane	11.3		"	10.0		113	70-130				
Bromoform	11.1		"	10.0		111	70-130				
Bromomethane	11.1		"	10.0		111	70-130				

Volatile Organic Compounds in Air by GC/MS - Quality Control Data

York Analytical Laboratories, Inc. - Stratford

Analyte	Result	Reporting Limit	Units	Spike Level	Source* Result	%REC	%REC Limits	Flag	RPD	RPD Limit	Flag
Batch BL41484 - EPA TO15 PREP											
LCS (BL41484-BS1) LCS							Prepared & Analyzed: 12/19/2024				
Carbon disulfide	11.1		ppbv	10.0		111	70-130				
Carbon tetrachloride	11.3		"	10.0		113	70-130				
Chlorobenzene	11.0		"	10.0		110	70-130				
Chloroethane	10.9		"	10.0		109	70-130				
Chloroform	11.5		"	10.0		115	70-130				
Chloromethane	11.0		"	10.0		110	70-130				
cis-1,2-Dichloroethylene	13.8		"	10.0		138	70-130	High Bias			
cis-1,3-Dichloropropylene	11.7		"	10.0		117	70-130				
Cyclohexane	11.0		"	10.0		110	70-130				
Dibromochloromethane	11.5		"	10.0		115	70-130				
Dichlorodifluoromethane	11.1		"	10.0		111	70-130				
Ethyl acetate	13.8		"	10.0		138	70-130	High Bias			
Ethyl Benzene	11.1		"	10.0		111	70-130				
Hexachlorobutadiene	9.76		"	10.0		97.6	70-130				
Isopropanol	9.78		"	10.0		97.8	70-130				
Methyl Methacrylate	10.5		"	10.0		105	70-130				
Methyl tert-butyl ether (MTBE)	11.0		"	10.0		110	70-130				
Methylene chloride	11.5		"	10.0		115	70-130				
Naphthalene	11.4		"	10.0		114	70-130				
n-Heptane	11.2		"	10.0		112	70-130				
n-Hexane	11.6		"	10.0		116	70-130				
o-Xylene	11.2		"	10.0		112	70-130				
p- & m- Xylenes	21.7		"	20.0		109	70-130				
p-Ethyltoluene	11.7		"	10.0		117	70-130				
Propylene	10.8		"	10.0		108	70-130				
Styrene	11.4		"	10.0		114	70-130				
Tetrachloroethylene	11.3		"	10.0		113	70-130				
Tetrahydrofuran	10.8		"	10.0		108	70-130				
Toluene	10.7		"	10.0		107	70-130				
trans-1,2-Dichloroethylene	11.4		"	10.0		114	70-130				
trans-1,3-Dichloropropylene	11.8		"	10.0		118	70-130				
Trichloroethylene	11.2		"	10.0		112	70-130				
Trichlorofluoromethane (Freon 11)	11.2		"	10.0		112	70-130				
Vinyl acetate	5.51		"	10.0		55.1	70-130	Low Bias			
Vinyl bromide	11.9		"	10.0		119	70-130				
Vinyl Chloride	11.0		"	10.0		110	70-130				

Sample and Data Qualifiers Relating to This Work Order

TO-LCS-L	The result reported for this compound may be biased low due to its behavior in the analysis batch LCS where it recovered less 70% of the expected value.
TO-IPA	The value for isopropanol is estimated. Dilutions are not conducted for this species as not to preclude actionable analytes by dilution.
TO-CCV	The value reported is ESTIMATED for this compound due to its behavior during continuing calibration verification (>30% Difference from initial calibration).
E	The concentration indicated for this analyte is an estimated value above the calibration range of the instrument. This value is considered an estimate.
B	Analyte is found in the associated analysis batch blank. For volatiles, methylene chloride and acetone are common lab contaminants.

Definitions and Other Explanations

*	Analyte is not certified or the state of the samples origination does not offer certification for the Analyte.
ND	NOT DETECTED - the analyte is not detected at the Reported to level (LOQ/RL or LOD/MDL)
RL	REPORTING LIMIT - the minimum reportable value based upon the lowest point in the analyte calibration curve.
LOQ	LIMIT OF QUANTITATION - the minimum concentration of a target analyte that can be reported within a specified degree of confidence. This is the lowest point in an analyte calibration curve that has been subjected to all steps of the processing/analysis and verified to meet defined criteria. This is based upon NELAC 2009 Standards and applies to all analyses.
LOD	LIMIT OF DETECTION - a verified estimate of the minimum concentration of a substance in a given matrix that an analytical process can reliably detect. This is based upon NELAC 2009 Standards and applies to all analyses conducted under the auspices of EPA SW-846.
MDL	METHOD DETECTION LIMIT - a statistically derived estimate of the minimum amount of a substance an analytical system can reliably detect with a 99% confidence that the concentration of the substance is greater than zero. This is based upon 40 CFR Part 136 Appendix B and applies only to EPA 600 and 200 series methods.
Reported to	This indicates that the data for a particular analysis is reported to either the LOD/MDL, or the LOQ/RL. In cases where the "Reported to" is located above the LOD/MDL, any value between this and the LOQ represents an estimated value which is "J" flagged accordingly. This applies to volatile and semi-volatile target compounds only.
NR	Not reported
RPD	Relative Percent Difference
Wet	The data has been reported on an as-received (wet weight) basis
Low Bias	Low Bias flag indicates that the recovery of the flagged analyte is below the laboratory or regulatory lower control limit. The data user should take note that this analyte may be biased low but should evaluate multiple lines of evidence including the LCS and site-specific MS/MSD data to draw bias conclusions. In cases where no site-specific MS/MSD was requested, only the LCS data can be used to evaluate such bias.
High Bias	High Bias flag indicates that the recovery of the flagged analyte is above the laboratory or regulatory upper control limit. The data user should take note that this analyte may be biased high but should evaluate multiple lines of evidence including the LCS and site-specific MS/MSD data to draw bias conclusions. In cases where no site-specific MS/MSD was requested, only the LCS data can be used to evaluate such bias.
Non-Dir.	Non-dir. flag (Non-Directional Bias) indicates that the Relative Percent Difference (RPD) (a measure of precision) among the MS and MSD data is outside the laboratory or regulatory control limit. This alerts the data user where the MS and MSD are from site-specific samples that the RPD is high due to either non-homogeneous distribution of target analyte between the MS/MSD or indicates poor reproducibility for other reasons.

If EPA SW-846 method 8270 is included herein it is noted that the target compound N-nitrosodiphenylamine (NDPA) decomposes in the gas chromatographic inlet and cannot be separated from diphenylamine (DPA). These results could actually represent 100% DPA, 100% NDPA or some combination of the two. For this reason, York reports the combined result for n-nitrosodiphenylamine and diphenylamine for either of these compounds as a combined concentration as Diphenylamine.

If Total PCBs are detected and the target aroclors reported are "Not detected", the Total PCB value is reported due to the presence of either or both Aroclors 1262 and 1268 which are non-target aroclors for some regulatory lists.

2-chloroethylvinyl ether readily breaks down under acidic conditions. Samples that are acid preserved, including standards will exhibit breakdown. The data user should take note.

Certification for pH is no longer offered by NYDOH ELAP.

Semi-Volatile and Volatile analyses are reported down to the LOD/MDL, with values between the LOD/MDL and the LOQ being "J" flagged as estimated results.

For analyses by EPA SW-846-8270D, the Limit of Quantitation (LOQ) reported for benzidine is based upon the lowest standard used for calibration and is not a verified LOQ due to this compound's propensity for oxidative losses during extraction/concentration procedures and non-reproducible chromatographic performance.

York Analytical Laboratories, Inc.
120 Research Drive, Stratford, CT 06615 | 132-02 89th Ave Queens, NY 11418
clientservices@yorklab.com
www.yorklab.com

Field Chain-of-Custody Record - AIR

NOTE: YORK's Standard Terms & Conditions are listed on the back side of this document. This document serves as your written authorization for YORK to proceed with the analyses requested below. Your signature binds you to YORK's Standard Terms & Conditions.

YORK Project No. 24L1600

YOUR Information	Report To:	Invoice To:
Company: Langan DPC	Company:	Company:
Address: 368 N. 4th Avenue New York, NY	Address:	Address:
Phone.: 212 479 5700	Phone.:	Phone.:
Contact: Vdepaula@langan.com	Contact:	Contact:
E-mail: Vinicius De Paula	E-mail:	E-mail:

YOUR Project Number: 1703613O7

YOUR Project Name: 514 Union Street

YOUR PO#:

Turn-Around Time

RUSH - Next Day	
RUSH - Two Day	
RUSH - Three Day	
RUSH - Four Day	
Standard (5-7 Day)	X

Please print clearly and legibly. All information must be complete. Samples will not be logged in and the turn-around-time clock will not begin until any questions by YORK are resolved.

Caroline Devin

Samples Collected by: (print your name above and sign below)

Air Matrix Codes

AI - Indoor Ambient Air
AO - Outdoor Amb. Air
AE - Vapor Extraction Well/ Process Gas/Effluent
AS - Soil Vapor/Sub-Slab

Samples From

New York	X
New Jersey	
Connecticut	
Pennsylvania	
Other	

Report / EDD Type (circle selections)

Summary Report	CT RCP	Standard Excel EDD
QA Report	CT RCP DQA/DUE	EQuIS (Standard)
NY ASP A Package	NJDEP Reduced Deliv.	NYSDEC EQuIS
(NY ASP B Package)	NJDKQP	NJDEP SRP HazSite
Other:		

YORK Reg. Comp.

Compared to the following Regulation(s): (please fill in)

Certified Canisters: Batch ___ Individual ___

Please enter the following REQUIRED Field Data

Reporting Units: ug/m³ ___ ppbv ___ ppmv ___

Sample Identification	Date/Time Sampled	Air Matrix	Canister Vacuum Before Sampling (in Hg)	Canister Vacuum After Sampling (in Hg)	Canister ID	Flow Cont. ID	Analysis Requested
FD01 - 122324	12/23/24 1200	AI	-30	-5	24108	20410	(TO-15 VOCs)
FD02 - 122324	1201	AI	-30	-6	49574	21016	
FD03 - 122324	1202	AI	-30	-5	49982	20446	
FD04 - 122324	1205	AI	-30	-5	20754	20234	
FD05 - 1223-24	1206	AI	-30	-6	43000	19393	
EA01 - 1223-24	1317	AE	-28	-4	48292	21031	

Comments: Please include datamanagement@langan.com; mburke@langan.com; pmcmanon@langan.com; pkoatz@langan.com; janayes@langan.com; cdevin@langan.com

Detection Limits Required

≤ 1 ug/m³ ___ NYSDEC VI Limits ___
Routine Survey ___ Other ___

Sampling Media

6 Liter Canister	X
Tedlar Bag	

Samples Relinquished by / Company	Date/Time	Samples Received by / Company	Date/Time	Samples Relinquished by / Company	Date/Time
Carline Devin/Langan	12/23/24/		12/23/24 1300		12/28/24 1600
Samples Received by / Company	Date/Time	Samples Relinquished by / Company	Date/Time	Samples Received by / Company	Date/Time
Samples Relinquished by / Company	Date/Time	Samples Received by / Company	Date/Time	Samples Received in LAB by	Date/Time
				WH	12/28/24 1600

Technical Report

prepared for:

Langan Engineering & Environmental Services (NYC)
21 Penn Plaza, 360 West 31st Street
New York NY, 10001
Attention: Vinicius DePaula

Report Date: 01/29/2025
Client Project ID: 170361307
York Project (SDG) No.: 25A1278

Report Date: 01/29/2025
Client Project ID: 170361307
York Project (SDG) No.: 25A1278

Langan Engineering & Environmental Services (NYC)
21 Penn Plaza, 360 West 31st Street
New York NY, 10001
Attention: Vinicius DePaula

Purpose and Results

This report contains the analytical data for the sample(s) identified on the attached chain-of-custody received in our laboratory on January 23, 2025 and listed below. The project was identified as your project: **170361307**.

The analyses were conducted utilizing appropriate EPA, Standard Methods, and ASTM methods as detailed in the data summary tables.

All samples were received in proper condition meeting the customary acceptance requirements for environmental samples except those indicated under the Sample and Analysis Qualifiers section of this report.

All analyses met the method and laboratory standard operating procedure requirements except as indicated by any data flags, the meaning of which are explained in the Sample and Data Qualifiers Relating to This Work Order section of this report and case narrative if applicable.

The results of the analyses, which are all reported on dry weight basis (soils) unless otherwise noted, are detailed in the following pages.

Please contact Client Services at 203.325.1371 with any questions regarding this report.

York Sample ID	Client Sample ID	Matrix	Date Collected	Date Received
25A1278-02	CAN 20944 / FC 19407	Air	01/22/2025	01/23/2025
25A1278-04	CAN 41939 / FC 19381	Air	01/22/2025	01/23/2025
25A1278-05	CAN 28844 / FC 21023	Air	01/22/2025	01/23/2025
25A1278-06	CAN 28850 / FC 19428	Air	01/22/2025	01/23/2025
25A1278-07	CAN 48288 / FC 21021	Air	01/22/2025	01/23/2025
25A1549-01	IA01_012825	Indoor Ambient Air	01/28/2025	01/28/2025
25A1549-02	IA02_012825	Indoor Ambient Air	01/28/2025	01/28/2025
25A1549-03	IA03_012825	Indoor Ambient Air	01/28/2025	01/28/2025
25A1549-04	IA04_012825	Indoor Ambient Air	01/28/2025	01/28/2025
25A1549-05	AA01_012825	Outdoor Ambient Ai	01/28/2025	01/28/2025

General Notes for York Project (SDG) No.: 25A1278

1. The RLs and MDLs (Reporting Limit and Method Detection Limit respectively) reported are adjusted for any dilution necessary due to the levels of target and/or non-target analytes and matrix interference. The RL(REPORTING LIMIT) is based upon the lowest standard utilized for the calibration where applicable.
2. Samples are retained for a period of thirty days after submittal of report, unless other arrangements are made.
3. York's liability for the above data is limited to the dollar value paid to York for the referenced project.
4. This report shall not be reproduced without the written approval of York Analytical Laboratories, Inc.
5. All analyses conducted met method or Laboratory SOP requirements. See the Sample and Data Qualifiers Section for further information.
6. It is noted that no analyses reported herein were subcontracted to another laboratory, unless noted in the report.
7. This report reflects results that relate only to the samples submitted on the attached chain-of-custody form(s) received by York.
8. Analyses conducted at York Analytical Laboratories, Inc. Stratford, CT are indicated by NY Cert. No. 10854; those conducted at York Analytical Laboratories, Inc., Richmond Hill, NY are indicated by NY Cert. No. 12058.

Approved By  **Date:** 01/29/2025

Cassie L. Mosher
Laboratory Manager

Sample Information

Client Sample ID: CAN 20944 / FC 19407 **York Sample ID:** 25A1278-02

York Project (SDG) No.	Client Project ID	Matrix	Collection Date/Time	Date Received
25A1278	170361307	Air	January 22, 2025 3:00 pm	01/23/2025

VOA, TO15 MASTER

Log-in Notes:

Sample Notes:

Sample Prepared by Method: EPA TO15 PREP

CAS No.	Parameter	Result	Flag	Units	Reported to LOQ	Dilution	Reference Method	Date/Time Prepared	Date/Time Analyzed	Analyst
630-20-6	* 1,1,1,2-Tetrachloroethane	ND		ug/m³	0.687	1	EPA TO-15 Certifications:	01/08/2025 09:23	01/08/2025 16:17	YR
71-55-6	1,1,1-Trichloroethane	ND		ug/m³	0.546	1	EPA TO-15 Certifications: NELAC-NY12058,NJDEP-NY037	01/08/2025 09:23	01/08/2025 16:17	YR
79-34-5	1,1,2,2-Tetrachloroethane	ND		ug/m³	0.687	1	EPA TO-15 Certifications: NELAC-NY12058,NJDEP-NY037	01/08/2025 09:23	01/08/2025 16:17	YR
76-13-1	1,1,2-Trichloro-1,2,2-trifluoroethane (Freon 113)	ND		ug/m³	0.766	1	EPA TO-15 Certifications: NELAC-NY12058,NJDEP-NY037	01/08/2025 09:23	01/08/2025 16:17	YR
79-00-5	1,1,2-Trichloroethane	ND		ug/m³	0.546	1	EPA TO-15 Certifications: NELAC-NY12058,NJDEP-NY037	01/08/2025 09:23	01/08/2025 16:17	YR
75-34-3	1,1-Dichloroethane	ND		ug/m³	0.405	1	EPA TO-15 Certifications: NELAC-NY12058,NJDEP-NY037	01/08/2025 09:23	01/08/2025 16:17	YR
75-35-4	1,1-Dichloroethylene	ND		ug/m³	0.198	1	EPA TO-15 Certifications: NELAC-NY12058,NJDEP-NY037	01/08/2025 09:23	01/08/2025 16:17	YR
120-82-1	1,2,4-Trichlorobenzene	ND		ug/m³	0.742	1	EPA TO-15 Certifications: NELAC-NY12058,NJDEP-NY037	01/08/2025 09:23	01/08/2025 16:17	YR
95-63-6	1,2,4-Trimethylbenzene	ND		ug/m³	0.492	1	EPA TO-15 Certifications: NELAC-NY12058,NJDEP-NY037	01/08/2025 09:23	01/08/2025 16:17	YR
106-93-4	1,2-Dibromoethane	ND		ug/m³	0.768	1	EPA TO-15 Certifications: NELAC-NY12058,NJDEP-NY037	01/08/2025 09:23	01/08/2025 16:17	YR
95-50-1	1,2-Dichlorobenzene	ND		ug/m³	0.601	1	EPA TO-15 Certifications: NELAC-NY12058,NJDEP-NY037	01/08/2025 09:23	01/08/2025 16:17	YR
107-06-2	1,2-Dichloroethane	ND		ug/m³	0.405	1	EPA TO-15 Certifications: NELAC-NY12058,NJDEP-NY037	01/08/2025 09:23	01/08/2025 16:17	YR
78-87-5	1,2-Dichloropropane	ND		ug/m³	0.462	1	EPA TO-15 Certifications: NELAC-NY12058,NJDEP-NY037	01/08/2025 09:23	01/08/2025 16:17	YR
76-14-2	1,2-Dichlorotetrafluoroethane	ND		ug/m³	0.699	1	EPA TO-15 Certifications: NELAC-NY12058,NJDEP-NY037	01/08/2025 09:23	01/08/2025 16:17	YR
108-67-8	1,3,5-Trimethylbenzene	ND		ug/m³	0.492	1	EPA TO-15 Certifications: NELAC-NY12058,NJDEP-NY037	01/08/2025 09:23	01/08/2025 16:17	YR
106-99-0	1,3-Butadiene	ND		ug/m³	0.664	1	EPA TO-15 Certifications: NELAC-NY12058,NJDEP-NY037	01/08/2025 09:23	01/08/2025 16:17	YR
541-73-1	1,3-Dichlorobenzene	ND		ug/m³	0.601	1	EPA TO-15 Certifications: NELAC-NY12058,NJDEP-NY037	01/08/2025 09:23	01/08/2025 16:17	YR
142-28-9	* 1,3-Dichloropropane	ND		ug/m³	0.462	1	EPA TO-15 Certifications:	01/08/2025 09:23	01/08/2025 16:17	YR
106-46-7	1,4-Dichlorobenzene	ND		ug/m³	0.601	1	EPA TO-15 Certifications: NELAC-NY12058,NJDEP-NY037	01/08/2025 09:23	01/08/2025 16:17	YR
123-91-1	1,4-Dioxane	ND		ug/m³	0.721	1	EPA TO-15 Certifications: NELAC-NY12058,NJDEP-NY037	01/08/2025 09:23	01/08/2025 16:17	YR
540-84-1	* 2,2,4-Trimethylpentane	ND		ug/m³	0.234	1	EPA TO-15 Certifications:	01/08/2025 09:23	01/08/2025 16:17	YR

Sample Information

Client Sample ID: CAN 20944 / FC 19407 **York Sample ID:** 25A1278-02

York Project (SDG) No.	Client Project ID	Matrix	Collection Date/Time	Date Received
25A1278	170361307	Air	January 22, 2025 3:00 pm	01/23/2025

VOA, TO15 MASTER **Log-in Notes:** **Sample Notes:**

Sample Prepared by Method: EPA TO15 PREP

CAS No.	Parameter	Result	Flag	Units	Reported to LOQ	Dilution	Reference Method	Date/Time Prepared	Date/Time Analyzed	Analyst
78-93-3	2-Butanone	ND		ug/m³	0.295	1	EPA TO-15	01/08/2025 09:23	01/08/2025 16:17	YR
							Certifications: NELAC-NY12058,NJDEP-NY037			
591-78-6	* 2-Hexanone	ND		ug/m³	0.819	1	EPA TO-15	01/08/2025 09:23	01/08/2025 16:17	YR
							Certifications:			
107-05-1	3-Chloropropene	ND		ug/m³	1.57	1	EPA TO-15	01/08/2025 09:23	01/08/2025 16:17	YR
							Certifications: NELAC-NY12058,NJDEP-NY037			
108-10-1	4-Methyl-2-pentanone	ND		ug/m³	0.410	1	EPA TO-15	01/08/2025 09:23	01/08/2025 16:17	YR
							Certifications: NELAC-NY12058,NJDEP-NY037			
67-64-1	Acetone	ND		ug/m³	1.90	1	EPA TO-15	01/08/2025 09:23	01/08/2025 16:17	YR
							Certifications: NELAC-NY12058,NJDEP-NY037			
107-13-1	Acrylonitrile	ND		ug/m³	2.82	1	EPA TO-15	01/08/2025 09:23	01/08/2025 16:17	YR
							Certifications: NELAC-NY12058,NJDEP-NY037			
71-43-2	Benzene	ND		ug/m³	0.319	1	EPA TO-15	01/08/2025 09:23	01/08/2025 16:17	YR
							Certifications: NELAC-NY12058,NJDEP-NY037			
100-44-7	Benzyl chloride	ND		ug/m³	0.518	1	EPA TO-15	01/08/2025 09:23	01/08/2025 16:17	YR
							Certifications: NELAC-NY12058,NJDEP-NY037			
75-27-4	Bromodichloromethane	ND		ug/m³	0.670	1	EPA TO-15	01/08/2025 09:23	01/08/2025 16:17	YR
							Certifications: NELAC-NY12058,NJDEP-NY037			
75-25-2	Bromoform	ND		ug/m³	1.03	1	EPA TO-15	01/08/2025 09:23	01/08/2025 16:17	YR
							Certifications: NELAC-NY12058,NJDEP-NY037			
74-83-9	Bromomethane	ND		ug/m³	0.388	1	EPA TO-15	01/08/2025 09:23	01/08/2025 16:17	YR
							Certifications: NELAC-NY12058,NJDEP-NY037			
75-15-0	Carbon disulfide	ND		ug/m³	0.311	1	EPA TO-15	01/08/2025 09:23	01/08/2025 16:17	YR
							Certifications: NELAC-NY12058,NJDEP-NY037			
56-23-5	Carbon tetrachloride	ND		ug/m³	0.157	1	EPA TO-15	01/08/2025 09:23	01/08/2025 16:17	YR
							Certifications: NELAC-NY12058,NJDEP-NY037			
108-90-7	Chlorobenzene	ND		ug/m³	0.460	1	EPA TO-15	01/08/2025 09:23	01/08/2025 16:17	YR
							Certifications: NELAC-NY12058,NJDEP-NY037			
75-00-3	Chloroethane	ND		ug/m³	0.264	1	EPA TO-15	01/08/2025 09:23	01/08/2025 16:17	YR
							Certifications: NELAC-NY12058,NJDEP-NY037			
67-66-3	Chloroform	ND		ug/m³	0.488	1	EPA TO-15	01/08/2025 09:23	01/08/2025 16:17	YR
							Certifications: NELAC-NY12058,NJDEP-NY037			
74-87-3	Chloromethane	ND		ug/m³	0.207	1	EPA TO-15	01/08/2025 09:23	01/08/2025 16:17	YR
							Certifications: NELAC-NY12058,NJDEP-NY037			
156-59-2	cis-1,2-Dichloroethylene	ND		ug/m³	0.198	1	EPA TO-15	01/08/2025 09:23	01/08/2025 16:17	YR
							Certifications: NELAC-NY12058,NJDEP-NY037			
10061-01-5	cis-1,3-Dichloropropylene	ND		ug/m³	0.454	1	EPA TO-15	01/08/2025 09:23	01/08/2025 16:17	YR
							Certifications: NELAC-NY12058,NJDEP-NY037			
110-82-7	Cyclohexane	ND		ug/m³	0.344	1	EPA TO-15	01/08/2025 09:23	01/08/2025 16:17	YR
							Certifications: NELAC-NY12058,NJDEP-NY037			
124-48-1	Dibromochloromethane	ND		ug/m³	0.852	1	EPA TO-15	01/08/2025 09:23	01/08/2025 16:17	YR
							Certifications: NELAC-NY12058,NJDEP-NY037			
75-71-8	Dichlorodifluoromethane	ND		ug/m³	0.495	1	EPA TO-15	01/08/2025 09:23	01/08/2025 16:17	YR
							Certifications: NELAC-NY12058,NJDEP-NY037			

Sample Information

Client Sample ID: CAN 20944 / FC 19407 **York Sample ID:** 25A1278-02

York Project (SDG) No.	Client Project ID	Matrix	Collection Date/Time	Date Received
25A1278	170361307	Air	January 22, 2025 3:00 pm	01/23/2025

VOA, TO15 MASTER **Log-in Notes:** **Sample Notes:**

Sample Prepared by Method: EPA TO15 PREP

CAS No.	Parameter	Result	Flag	Units	Reported to LOQ	Dilution	Reference Method	Date/Time Prepared	Date/Time Analyzed	Analyst
141-78-6	* Ethyl acetate	ND		ug/m³	0.721	1	EPA TO-15	01/08/2025 09:23	01/08/2025 16:17	YR
							Certifications:			
100-41-4	Ethyl Benzene	ND		ug/m³	0.434	1	EPA TO-15	01/08/2025 09:23	01/08/2025 16:17	YR
							Certifications:	NELAC-NY12058,NJDEP-NY037		
87-68-3	Hexachlorobutadiene	ND		ug/m³	1.07	1	EPA TO-15	01/08/2025 09:23	01/08/2025 16:17	YR
							Certifications:	NELAC-NY12058,NJDEP-NY037		
67-63-0	Isopropanol	ND		ug/m³	1.47	1	EPA TO-15	01/08/2025 09:23	01/08/2025 16:17	YR
							Certifications:	NELAC-NY12058,NJDEP-NY037		
80-62-6	Methyl Methacrylate	ND		ug/m³	0.409	1	EPA TO-15	01/08/2025 09:23	01/08/2025 16:17	YR
							Certifications:	NELAC-NY12058,NJDEP-NY037		
1634-04-4	Methyl tert-butyl ether (MTBE)	ND		ug/m³	0.361	1	EPA TO-15	01/08/2025 09:23	01/08/2025 16:17	YR
							Certifications:	NELAC-NY12058,NJDEP-NY037		
75-09-2	Methylene chloride	ND		ug/m³	2.08	1	EPA TO-15	01/08/2025 09:23	01/08/2025 16:17	YR
							Certifications:	NELAC-NY12058,NJDEP-NY037		
91-20-3	* Naphthalene	ND		ug/m³	1.05	1	EPA TO-15	01/08/2025 09:23	01/08/2025 16:17	YR
							Certifications:	NJDEP-NY037		
142-82-5	n-Heptane	ND		ug/m³	0.410	1	EPA TO-15	01/08/2025 09:23	01/08/2025 16:17	YR
							Certifications:	NELAC-NY12058,NJDEP-NY037		
110-54-3	n-Hexane	ND		ug/m³	0.352	1	EPA TO-15	01/08/2025 09:23	01/08/2025 16:17	YR
							Certifications:	NELAC-NY12058,NJDEP-NY037		
95-47-6	o-Xylene	ND		ug/m³	0.434	1	EPA TO-15	01/08/2025 09:23	01/08/2025 16:17	YR
							Certifications:	NELAC-NY12058,NJDEP-NY037		
179601-23-1	p- & m- Xylenes	ND		ug/m³	0.868	1	EPA TO-15	01/08/2025 09:23	01/08/2025 16:17	YR
							Certifications:	NELAC-NY12058,NJDEP-NY037		
622-96-8	* p-Ethyltoluene	ND		ug/m³	0.492	1	EPA TO-15	01/08/2025 09:23	01/08/2025 16:17	YR
							Certifications:			
115-07-1	* Propylene	ND		ug/m³	0.172	1	EPA TO-15	01/08/2025 09:23	01/08/2025 16:17	YR
							Certifications:			
100-42-5	Styrene	ND		ug/m³	0.426	1	EPA TO-15	01/08/2025 09:23	01/08/2025 16:17	YR
							Certifications:	NELAC-NY12058,NJDEP-NY037		
127-18-4	Tetrachloroethylene	ND		ug/m³	0.678	1	EPA TO-15	01/08/2025 09:23	01/08/2025 16:17	YR
							Certifications:	NELAC-NY12058,NJDEP-NY037		
109-99-9	* Tetrahydrofuran	ND		ug/m³	0.590	1	EPA TO-15	01/08/2025 09:23	01/08/2025 16:17	YR
							Certifications:			
108-88-3	Toluene	ND		ug/m³	0.377	1	EPA TO-15	01/08/2025 09:23	01/08/2025 16:17	YR
							Certifications:	NELAC-NY12058,NJDEP-NY037		
156-60-5	trans-1,2-Dichloroethylene	ND		ug/m³	0.396	1	EPA TO-15	01/08/2025 09:23	01/08/2025 16:17	YR
							Certifications:	NELAC-NY12058,NJDEP-NY037		
10061-02-6	trans-1,3-Dichloropropylene	ND		ug/m³	0.454	1	EPA TO-15	01/08/2025 09:23	01/08/2025 16:17	YR
							Certifications:	NELAC-NY12058,NJDEP-NY037		
79-01-6	Trichloroethylene	ND		ug/m³	0.134	1	EPA TO-15	01/08/2025 09:23	01/08/2025 16:17	YR
							Certifications:	NELAC-NY12058,NJDEP-NY037		
75-69-4	Trichlorofluoromethane (Freon 11)	ND		ug/m³	0.562	1	EPA TO-15	01/08/2025 09:23	01/08/2025 16:17	YR
							Certifications:	NELAC-NY12058,NJDEP-NY037		

Sample Information

Client Sample ID: CAN 20944 / FC 19407 **York Sample ID:** 25A1278-02

York Project (SDG) No.	Client Project ID	Matrix	Collection Date/Time	Date Received
25A1278	170361307	Air	January 22, 2025 3:00 pm	01/23/2025

VOA, TO15 MASTER

Log-in Notes:

Sample Notes:

Sample Prepared by Method: EPA TO15 PREP

CAS No.	Parameter	Result	Flag	Units	Reported to LOQ	Dilution	Reference Method	Date/Time Prepared	Date/Time Analyzed	Analyst
108-05-4	Vinyl acetate	ND		ug/m³	0.352	1	EPA TO-15	01/08/2025 09:23	01/08/2025 16:17	YR
							Certifications:	NELAC-NY12058,NJDEP-NY037		
593-60-2	Vinyl bromide	ND		ug/m³	0.437	1	EPA TO-15	01/08/2025 09:23	01/08/2025 16:17	YR
							Certifications:	NELAC-NY12058,NJDEP-NY037		
75-01-4	Vinyl Chloride	ND		ug/m³	0.128	1	EPA TO-15	01/08/2025 09:23	01/08/2025 16:17	YR
							Certifications:	NELAC-NY12058,NJDEP-NY037		

Sample Information

Client Sample ID: CAN 41939 / FC 19381 **York Sample ID:** 25A1278-04

York Project (SDG) No.	Client Project ID	Matrix	Collection Date/Time	Date Received
25A1278	170361307	Air	January 22, 2025 3:00 pm	01/23/2025

VOA, TO15 MASTER

Log-in Notes:

Sample Notes:

Sample Prepared by Method: EPA TO15 PREP

CAS No.	Parameter	Result	Flag	Units	Reported to LOQ	Dilution	Reference Method	Date/Time Prepared	Date/Time Analyzed	Analyst
630-20-6	* 1,1,1,2-Tetrachloroethane	ND		ug/m³	0.687	1	EPA TO-15 Certifications:	01/07/2025 12:00	01/08/2025 01:02	YR
71-55-6	1,1,1-Trichloroethane	ND		ug/m³	0.546	1	EPA TO-15 Certifications: NELAC-NY12058,NJDEP-NY037	01/07/2025 12:00	01/08/2025 01:02	YR
79-34-5	1,1,2,2-Tetrachloroethane	ND		ug/m³	0.687	1	EPA TO-15 Certifications: NELAC-NY12058,NJDEP-NY037	01/07/2025 12:00	01/08/2025 01:02	YR
76-13-1	1,1,2-Trichloro-1,2,2-trifluoroethane (Freon 113)	ND		ug/m³	0.766	1	EPA TO-15 Certifications: NELAC-NY12058,NJDEP-NY037	01/07/2025 12:00	01/08/2025 01:02	YR
79-00-5	1,1,2-Trichloroethane	ND		ug/m³	0.546	1	EPA TO-15 Certifications: NELAC-NY12058,NJDEP-NY037	01/07/2025 12:00	01/08/2025 01:02	YR
75-34-3	1,1-Dichloroethane	ND		ug/m³	0.405	1	EPA TO-15 Certifications: NELAC-NY12058,NJDEP-NY037	01/07/2025 12:00	01/08/2025 01:02	YR
75-35-4	1,1-Dichloroethylene	ND		ug/m³	0.198	1	EPA TO-15 Certifications: NELAC-NY12058,NJDEP-NY037	01/07/2025 12:00	01/08/2025 01:02	YR
120-82-1	1,2,4-Trichlorobenzene	ND		ug/m³	0.742	1	EPA TO-15 Certifications: NELAC-NY12058,NJDEP-NY037	01/07/2025 12:00	01/08/2025 01:02	YR
95-63-6	1,2,4-Trimethylbenzene	ND		ug/m³	0.492	1	EPA TO-15 Certifications: NELAC-NY12058,NJDEP-NY037	01/07/2025 12:00	01/08/2025 01:02	YR
106-93-4	1,2-Dibromoethane	ND		ug/m³	0.768	1	EPA TO-15 Certifications: NELAC-NY12058,NJDEP-NY037	01/07/2025 12:00	01/08/2025 01:02	YR
95-50-1	1,2-Dichlorobenzene	ND		ug/m³	0.601	1	EPA TO-15 Certifications: NELAC-NY12058,NJDEP-NY037	01/07/2025 12:00	01/08/2025 01:02	YR
107-06-2	1,2-Dichloroethane	ND		ug/m³	0.405	1	EPA TO-15 Certifications: NELAC-NY12058,NJDEP-NY037	01/07/2025 12:00	01/08/2025 01:02	YR
78-87-5	1,2-Dichloropropane	ND		ug/m³	0.462	1	EPA TO-15 Certifications: NELAC-NY12058,NJDEP-NY037	01/07/2025 12:00	01/08/2025 01:02	YR
76-14-2	1,2-Dichlorotetrafluoroethane	ND		ug/m³	0.699	1	EPA TO-15 Certifications: NELAC-NY12058,NJDEP-NY037	01/07/2025 12:00	01/08/2025 01:02	YR
108-67-8	1,3,5-Trimethylbenzene	ND		ug/m³	0.492	1	EPA TO-15 Certifications: NELAC-NY12058,NJDEP-NY037	01/07/2025 12:00	01/08/2025 01:02	YR
106-99-0	1,3-Butadiene	ND		ug/m³	0.664	1	EPA TO-15 Certifications: NELAC-NY12058,NJDEP-NY037	01/07/2025 12:00	01/08/2025 01:02	YR
541-73-1	1,3-Dichlorobenzene	ND		ug/m³	0.601	1	EPA TO-15 Certifications: NELAC-NY12058,NJDEP-NY037	01/07/2025 12:00	01/08/2025 01:02	YR
142-28-9	* 1,3-Dichloropropane	ND		ug/m³	0.462	1	EPA TO-15 Certifications:	01/07/2025 12:00	01/08/2025 01:02	YR
106-46-7	1,4-Dichlorobenzene	ND		ug/m³	0.601	1	EPA TO-15 Certifications: NELAC-NY12058,NJDEP-NY037	01/07/2025 12:00	01/08/2025 01:02	YR
123-91-1	1,4-Dioxane	ND		ug/m³	0.721	1	EPA TO-15 Certifications: NELAC-NY12058,NJDEP-NY037	01/07/2025 12:00	01/08/2025 01:02	YR
540-84-1	* 2,2,4-Trimethylpentane	ND		ug/m³	0.234	1	EPA TO-15 Certifications:	01/07/2025 12:00	01/08/2025 01:02	YR
78-93-3	2-Butanone	ND		ug/m³	0.295	1	EPA TO-15 Certifications: NELAC-NY12058,NJDEP-NY037	01/07/2025 12:00	01/08/2025 01:02	YR

Sample Information

Client Sample ID: CAN 41939 / FC 19381 **York Sample ID:** 25A1278-04

York Project (SDG) No.	Client Project ID	Matrix	Collection Date/Time	Date Received
25A1278	170361307	Air	January 22, 2025 3:00 pm	01/23/2025

VOA, TO15 MASTER **Log-in Notes:** **Sample Notes:**

Sample Prepared by Method: EPA TO15 PREP

CAS No.	Parameter	Result	Flag	Units	Reported to LOQ	Dilution	Reference Method	Date/Time Prepared	Date/Time Analyzed	Analyst
591-78-6	* 2-Hexanone	ND		ug/m³	0.819	1	EPA TO-15	01/07/2025 12:00	01/08/2025 01:02	YR
							Certifications:			
107-05-1	3-Chloropropene	ND		ug/m³	1.57	1	EPA TO-15	01/07/2025 12:00	01/08/2025 01:02	YR
							Certifications:	NELAC-NY12058,NJDEP-NY037		
108-10-1	4-Methyl-2-pentanone	ND		ug/m³	0.410	1	EPA TO-15	01/07/2025 12:00	01/08/2025 01:02	YR
							Certifications:	NELAC-NY12058,NJDEP-NY037		
67-64-1	Acetone	ND		ug/m³	1.90	1	EPA TO-15	01/07/2025 12:00	01/08/2025 01:02	YR
							Certifications:	NELAC-NY12058,NJDEP-NY037		
107-13-1	Acrylonitrile	ND		ug/m³	2.82	1	EPA TO-15	01/07/2025 12:00	01/08/2025 01:02	YR
							Certifications:	NELAC-NY12058,NJDEP-NY037		
71-43-2	Benzene	ND		ug/m³	0.319	1	EPA TO-15	01/07/2025 12:00	01/08/2025 01:02	YR
							Certifications:	NELAC-NY12058,NJDEP-NY037		
100-44-7	Benzyl chloride	ND		ug/m³	0.518	1	EPA TO-15	01/07/2025 12:00	01/08/2025 01:02	YR
							Certifications:	NELAC-NY12058,NJDEP-NY037		
75-27-4	Bromodichloromethane	ND		ug/m³	0.670	1	EPA TO-15	01/07/2025 12:00	01/08/2025 01:02	YR
							Certifications:	NELAC-NY12058,NJDEP-NY037		
75-25-2	Bromoform	ND		ug/m³	1.03	1	EPA TO-15	01/07/2025 12:00	01/08/2025 01:02	YR
							Certifications:	NELAC-NY12058,NJDEP-NY037		
74-83-9	Bromomethane	ND		ug/m³	0.388	1	EPA TO-15	01/07/2025 12:00	01/08/2025 01:02	YR
							Certifications:	NELAC-NY12058,NJDEP-NY037		
75-15-0	Carbon disulfide	ND		ug/m³	0.311	1	EPA TO-15	01/07/2025 12:00	01/08/2025 01:02	YR
							Certifications:	NELAC-NY12058,NJDEP-NY037		
56-23-5	Carbon tetrachloride	ND		ug/m³	0.157	1	EPA TO-15	01/07/2025 12:00	01/08/2025 01:02	YR
							Certifications:	NELAC-NY12058,NJDEP-NY037		
108-90-7	Chlorobenzene	ND		ug/m³	0.460	1	EPA TO-15	01/07/2025 12:00	01/08/2025 01:02	YR
							Certifications:	NELAC-NY12058,NJDEP-NY037		
75-00-3	Chloroethane	ND		ug/m³	0.264	1	EPA TO-15	01/07/2025 12:00	01/08/2025 01:02	YR
							Certifications:	NELAC-NY12058,NJDEP-NY037		
67-66-3	Chloroform	ND		ug/m³	0.488	1	EPA TO-15	01/07/2025 12:00	01/08/2025 01:02	YR
							Certifications:	NELAC-NY12058,NJDEP-NY037		
74-87-3	Chloromethane	ND		ug/m³	0.207	1	EPA TO-15	01/07/2025 12:00	01/08/2025 01:02	YR
							Certifications:	NELAC-NY12058,NJDEP-NY037		
156-59-2	cis-1,2-Dichloroethylene	ND		ug/m³	0.198	1	EPA TO-15	01/07/2025 12:00	01/08/2025 01:02	YR
							Certifications:	NELAC-NY12058,NJDEP-NY037		
10061-01-5	cis-1,3-Dichloropropylene	ND		ug/m³	0.454	1	EPA TO-15	01/07/2025 12:00	01/08/2025 01:02	YR
							Certifications:	NELAC-NY12058,NJDEP-NY037		
110-82-7	Cyclohexane	ND		ug/m³	0.344	1	EPA TO-15	01/07/2025 12:00	01/08/2025 01:02	YR
							Certifications:	NELAC-NY12058,NJDEP-NY037		
124-48-1	Dibromochloromethane	ND		ug/m³	0.852	1	EPA TO-15	01/07/2025 12:00	01/08/2025 01:02	YR
							Certifications:	NELAC-NY12058,NJDEP-NY037		
75-71-8	Dichlorodifluoromethane	ND		ug/m³	0.495	1	EPA TO-15	01/07/2025 12:00	01/08/2025 01:02	YR
							Certifications:	NELAC-NY12058,NJDEP-NY037		
141-78-6	* Ethyl acetate	ND		ug/m³	0.721	1	EPA TO-15	01/07/2025 12:00	01/08/2025 01:02	YR
							Certifications:			

Sample Information

Client Sample ID: CAN 41939 / FC 19381 **York Sample ID:** 25A1278-04

York Project (SDG) No.	Client Project ID	Matrix	Collection Date/Time	Date Received
25A1278	170361307	Air	January 22, 2025 3:00 pm	01/23/2025

VOA, TO15 MASTER

Log-in Notes:

Sample Notes:

Sample Prepared by Method: EPA TO15 PREP

CAS No.	Parameter	Result	Flag	Units	Reported to LOQ	Dilution	Reference Method	Date/Time Prepared	Date/Time Analyzed	Analyst
100-41-4	Ethyl Benzene	ND		ug/m³	0.434	1	EPA TO-15	01/07/2025 12:00	01/08/2025 01:02	YR
							Certifications: NELAC-NY12058,NJDEP-NY037			
87-68-3	Hexachlorobutadiene	ND		ug/m³	1.07	1	EPA TO-15	01/07/2025 12:00	01/08/2025 01:02	YR
							Certifications: NELAC-NY12058,NJDEP-NY037			
67-63-0	Isopropanol	ND		ug/m³	1.47	1	EPA TO-15	01/07/2025 12:00	01/08/2025 01:02	YR
							Certifications: NELAC-NY12058,NJDEP-NY037			
80-62-6	Methyl Methacrylate	ND		ug/m³	0.409	1	EPA TO-15	01/07/2025 12:00	01/08/2025 01:02	YR
							Certifications: NELAC-NY12058,NJDEP-NY037			
1634-04-4	Methyl tert-butyl ether (MTBE)	ND		ug/m³	0.361	1	EPA TO-15	01/07/2025 12:00	01/08/2025 01:02	YR
							Certifications: NELAC-NY12058,NJDEP-NY037			
75-09-2	Methylene chloride	ND		ug/m³	2.08	1	EPA TO-15	01/07/2025 12:00	01/08/2025 01:02	YR
							Certifications: NELAC-NY12058,NJDEP-NY037			
91-20-3	* Naphthalene	ND		ug/m³	1.05	1	EPA TO-15	01/07/2025 12:00	01/08/2025 01:02	YR
							Certifications: NJDEP-NY037			
142-82-5	n-Heptane	ND		ug/m³	0.410	1	EPA TO-15	01/07/2025 12:00	01/08/2025 01:02	YR
							Certifications: NELAC-NY12058,NJDEP-NY037			
110-54-3	n-Hexane	ND		ug/m³	0.352	1	EPA TO-15	01/07/2025 12:00	01/08/2025 01:02	YR
							Certifications: NELAC-NY12058,NJDEP-NY037			
95-47-6	o-Xylene	ND		ug/m³	0.434	1	EPA TO-15	01/07/2025 12:00	01/08/2025 01:02	YR
							Certifications: NELAC-NY12058,NJDEP-NY037			
179601-23-1	p- & m- Xylenes	ND		ug/m³	0.868	1	EPA TO-15	01/07/2025 12:00	01/08/2025 01:02	YR
							Certifications: NELAC-NY12058,NJDEP-NY037			
622-96-8	* p-Ethyltoluene	ND		ug/m³	0.492	1	EPA TO-15	01/07/2025 12:00	01/08/2025 01:02	YR
							Certifications:			
115-07-1	* Propylene	ND		ug/m³	0.172	1	EPA TO-15	01/07/2025 12:00	01/08/2025 01:02	YR
							Certifications:			
100-42-5	Styrene	ND		ug/m³	0.426	1	EPA TO-15	01/07/2025 12:00	01/08/2025 01:02	YR
							Certifications: NELAC-NY12058,NJDEP-NY037			
127-18-4	Tetrachloroethylene	ND		ug/m³	0.678	1	EPA TO-15	01/07/2025 12:00	01/08/2025 01:02	YR
							Certifications: NELAC-NY12058,NJDEP-NY037			
109-99-9	* Tetrahydrofuran	ND		ug/m³	0.590	1	EPA TO-15	01/07/2025 12:00	01/08/2025 01:02	YR
							Certifications:			
108-88-3	Toluene	ND		ug/m³	0.377	1	EPA TO-15	01/07/2025 12:00	01/08/2025 01:02	YR
							Certifications: NELAC-NY12058,NJDEP-NY037			
156-60-5	trans-1,2-Dichloroethylene	ND		ug/m³	0.396	1	EPA TO-15	01/07/2025 12:00	01/08/2025 01:02	YR
							Certifications: NELAC-NY12058,NJDEP-NY037			
10061-02-6	trans-1,3-Dichloropropylene	ND		ug/m³	0.454	1	EPA TO-15	01/07/2025 12:00	01/08/2025 01:02	YR
							Certifications: NELAC-NY12058,NJDEP-NY037			
79-01-6	Trichloroethylene	ND		ug/m³	0.134	1	EPA TO-15	01/07/2025 12:00	01/08/2025 01:02	YR
							Certifications: NELAC-NY12058,NJDEP-NY037			
75-69-4	Trichlorofluoromethane (Freon 11)	ND		ug/m³	0.562	1	EPA TO-15	01/07/2025 12:00	01/08/2025 01:02	YR
							Certifications: NELAC-NY12058,NJDEP-NY037			
108-05-4	Vinyl acetate	ND		ug/m³	0.352	1	EPA TO-15	01/07/2025 12:00	01/08/2025 01:02	YR
							Certifications: NELAC-NY12058,NJDEP-NY037			

Sample Information

Client Sample ID: **CAN 41939 / FC 19381** **York Sample ID:** **25A1278-04**

York Project (SDG) No.	Client Project ID	Matrix	Collection Date/Time	Date Received
25A1278	170361307	Air	January 22, 2025 3:00 pm	01/23/2025

VOA, TO15 MASTER

Log-in Notes:

Sample Notes:

Sample Prepared by Method: EPA TO15 PREP

CAS No.	Parameter	Result	Flag	Units	Reported to LOQ	Dilution	Reference Method	Date/Time Prepared	Date/Time Analyzed	Analyst
593-60-2	Vinyl bromide	ND		ug/m³	0.437	1	EPA TO-15	01/07/2025 12:00	01/08/2025 01:02	YR
							Certifications:	NELAC-NY12058,NJDEP-NY037		
75-01-4	Vinyl Chloride	ND		ug/m³	0.128	1	EPA TO-15	01/07/2025 12:00	01/08/2025 01:02	YR
							Certifications:	NELAC-NY12058,NJDEP-NY037		

Sample Information

Client Sample ID: CAN 28844 / FC 21023 **York Sample ID:** 25A1278-05

York Project (SDG) No.	Client Project ID	Matrix	Collection Date/Time	Date Received
25A1278	170361307	Air	January 22, 2025 3:00 pm	01/23/2025

VOA, TO15 MASTER

Log-in Notes:

Sample Notes:

Sample Prepared by Method: EPA TO15 PREP

CAS No.	Parameter	Result	Flag	Units	Reported to LOQ	Dilution	Reference Method	Date/Time Prepared	Date/Time Analyzed	Analyst
630-20-6	* 1,1,1,2-Tetrachloroethane	ND		ug/m³	0.687	1	EPA TO-15 Certifications:	01/07/2025 12:00	01/08/2025 06:51	YR
71-55-6	1,1,1-Trichloroethane	ND		ug/m³	0.546	1	EPA TO-15 Certifications: NELAC-NY12058,NJDEP-NY037	01/07/2025 12:00	01/08/2025 06:51	YR
79-34-5	1,1,2,2-Tetrachloroethane	ND		ug/m³	0.687	1	EPA TO-15 Certifications: NELAC-NY12058,NJDEP-NY037	01/07/2025 12:00	01/08/2025 06:51	YR
76-13-1	1,1,2-Trichloro-1,2,2-trifluoroethane (Freon 113)	ND		ug/m³	0.766	1	EPA TO-15 Certifications: NELAC-NY12058,NJDEP-NY037	01/07/2025 12:00	01/08/2025 06:51	YR
79-00-5	1,1,2-Trichloroethane	ND		ug/m³	0.546	1	EPA TO-15 Certifications: NELAC-NY12058,NJDEP-NY037	01/07/2025 12:00	01/08/2025 06:51	YR
75-34-3	1,1-Dichloroethane	ND		ug/m³	0.405	1	EPA TO-15 Certifications: NELAC-NY12058,NJDEP-NY037	01/07/2025 12:00	01/08/2025 06:51	YR
75-35-4	1,1-Dichloroethylene	ND		ug/m³	0.198	1	EPA TO-15 Certifications: NELAC-NY12058,NJDEP-NY037	01/07/2025 12:00	01/08/2025 06:51	YR
120-82-1	1,2,4-Trichlorobenzene	ND		ug/m³	0.742	1	EPA TO-15 Certifications: NELAC-NY12058,NJDEP-NY037	01/07/2025 12:00	01/08/2025 06:51	YR
95-63-6	1,2,4-Trimethylbenzene	ND		ug/m³	0.492	1	EPA TO-15 Certifications: NELAC-NY12058,NJDEP-NY037	01/07/2025 12:00	01/08/2025 06:51	YR
106-93-4	1,2-Dibromoethane	ND		ug/m³	0.768	1	EPA TO-15 Certifications: NELAC-NY12058,NJDEP-NY037	01/07/2025 12:00	01/08/2025 06:51	YR
95-50-1	1,2-Dichlorobenzene	ND		ug/m³	0.601	1	EPA TO-15 Certifications: NELAC-NY12058,NJDEP-NY037	01/07/2025 12:00	01/08/2025 06:51	YR
107-06-2	1,2-Dichloroethane	ND		ug/m³	0.405	1	EPA TO-15 Certifications: NELAC-NY12058,NJDEP-NY037	01/07/2025 12:00	01/08/2025 06:51	YR
78-87-5	1,2-Dichloropropane	ND		ug/m³	0.462	1	EPA TO-15 Certifications: NELAC-NY12058,NJDEP-NY037	01/07/2025 12:00	01/08/2025 06:51	YR
76-14-2	1,2-Dichlorotetrafluoroethane	ND		ug/m³	0.699	1	EPA TO-15 Certifications: NELAC-NY12058,NJDEP-NY037	01/07/2025 12:00	01/08/2025 06:51	YR
108-67-8	1,3,5-Trimethylbenzene	ND		ug/m³	0.492	1	EPA TO-15 Certifications: NELAC-NY12058,NJDEP-NY037	01/07/2025 12:00	01/08/2025 06:51	YR
106-99-0	1,3-Butadiene	ND		ug/m³	0.664	1	EPA TO-15 Certifications: NELAC-NY12058,NJDEP-NY037	01/07/2025 12:00	01/08/2025 06:51	YR
541-73-1	1,3-Dichlorobenzene	ND		ug/m³	0.601	1	EPA TO-15 Certifications: NELAC-NY12058,NJDEP-NY037	01/07/2025 12:00	01/08/2025 06:51	YR
142-28-9	* 1,3-Dichloropropane	ND		ug/m³	0.462	1	EPA TO-15 Certifications:	01/07/2025 12:00	01/08/2025 06:51	YR
106-46-7	1,4-Dichlorobenzene	ND		ug/m³	0.601	1	EPA TO-15 Certifications: NELAC-NY12058,NJDEP-NY037	01/07/2025 12:00	01/08/2025 06:51	YR
123-91-1	1,4-Dioxane	ND		ug/m³	0.721	1	EPA TO-15 Certifications: NELAC-NY12058,NJDEP-NY037	01/07/2025 12:00	01/08/2025 06:51	YR
540-84-1	* 2,2,4-Trimethylpentane	ND		ug/m³	0.234	1	EPA TO-15 Certifications:	01/07/2025 12:00	01/08/2025 06:51	YR
78-93-3	2-Butanone	ND		ug/m³	0.295	1	EPA TO-15 Certifications: NELAC-NY12058,NJDEP-NY037	01/07/2025 12:00	01/08/2025 06:51	YR

Sample Information

Client Sample ID: CAN 28844 / FC 21023 **York Sample ID:** 25A1278-05

York Project (SDG) No.	Client Project ID	Matrix	Collection Date/Time	Date Received
25A1278	170361307	Air	January 22, 2025 3:00 pm	01/23/2025

VOA, TO15 MASTER **Log-in Notes:** **Sample Notes:**

Sample Prepared by Method: EPA TO15 PREP

CAS No.	Parameter	Result	Flag	Units	Reported to LOQ	Dilution	Reference Method	Date/Time Prepared	Date/Time Analyzed	Analyst
591-78-6	* 2-Hexanone	ND		ug/m³	0.819	1	EPA TO-15	01/07/2025 12:00	01/08/2025 06:51	YR
							Certifications:			
107-05-1	3-Chloropropene	ND		ug/m³	1.57	1	EPA TO-15	01/07/2025 12:00	01/08/2025 06:51	YR
							Certifications:	NELAC-NY12058,NJDEP-NY037		
108-10-1	4-Methyl-2-pentanone	ND		ug/m³	0.410	1	EPA TO-15	01/07/2025 12:00	01/08/2025 06:51	YR
							Certifications:	NELAC-NY12058,NJDEP-NY037		
67-64-1	Acetone	ND		ug/m³	1.90	1	EPA TO-15	01/07/2025 12:00	01/08/2025 06:51	YR
							Certifications:	NELAC-NY12058,NJDEP-NY037		
107-13-1	Acrylonitrile	ND		ug/m³	2.82	1	EPA TO-15	01/07/2025 12:00	01/08/2025 06:51	YR
							Certifications:	NELAC-NY12058,NJDEP-NY037		
71-43-2	Benzene	ND		ug/m³	0.319	1	EPA TO-15	01/07/2025 12:00	01/08/2025 06:51	YR
							Certifications:	NELAC-NY12058,NJDEP-NY037		
100-44-7	Benzyl chloride	ND		ug/m³	0.518	1	EPA TO-15	01/07/2025 12:00	01/08/2025 06:51	YR
							Certifications:	NELAC-NY12058,NJDEP-NY037		
75-27-4	Bromodichloromethane	ND		ug/m³	0.670	1	EPA TO-15	01/07/2025 12:00	01/08/2025 06:51	YR
							Certifications:	NELAC-NY12058,NJDEP-NY037		
75-25-2	Bromoform	ND		ug/m³	1.03	1	EPA TO-15	01/07/2025 12:00	01/08/2025 06:51	YR
							Certifications:	NELAC-NY12058,NJDEP-NY037		
74-83-9	Bromomethane	ND		ug/m³	0.388	1	EPA TO-15	01/07/2025 12:00	01/08/2025 06:51	YR
							Certifications:	NELAC-NY12058,NJDEP-NY037		
75-15-0	Carbon disulfide	ND		ug/m³	0.311	1	EPA TO-15	01/07/2025 12:00	01/08/2025 06:51	YR
							Certifications:	NELAC-NY12058,NJDEP-NY037		
56-23-5	Carbon tetrachloride	ND		ug/m³	0.157	1	EPA TO-15	01/07/2025 12:00	01/08/2025 06:51	YR
							Certifications:	NELAC-NY12058,NJDEP-NY037		
108-90-7	Chlorobenzene	ND		ug/m³	0.460	1	EPA TO-15	01/07/2025 12:00	01/08/2025 06:51	YR
							Certifications:	NELAC-NY12058,NJDEP-NY037		
75-00-3	Chloroethane	ND		ug/m³	0.264	1	EPA TO-15	01/07/2025 12:00	01/08/2025 06:51	YR
							Certifications:	NELAC-NY12058,NJDEP-NY037		
67-66-3	Chloroform	ND		ug/m³	0.488	1	EPA TO-15	01/07/2025 12:00	01/08/2025 06:51	YR
							Certifications:	NELAC-NY12058,NJDEP-NY037		
74-87-3	Chloromethane	ND		ug/m³	0.207	1	EPA TO-15	01/07/2025 12:00	01/08/2025 06:51	YR
							Certifications:	NELAC-NY12058,NJDEP-NY037		
156-59-2	cis-1,2-Dichloroethylene	ND		ug/m³	0.198	1	EPA TO-15	01/07/2025 12:00	01/08/2025 06:51	YR
							Certifications:	NELAC-NY12058,NJDEP-NY037		
10061-01-5	cis-1,3-Dichloropropylene	ND		ug/m³	0.454	1	EPA TO-15	01/07/2025 12:00	01/08/2025 06:51	YR
							Certifications:	NELAC-NY12058,NJDEP-NY037		
110-82-7	Cyclohexane	ND		ug/m³	0.344	1	EPA TO-15	01/07/2025 12:00	01/08/2025 06:51	YR
							Certifications:	NELAC-NY12058,NJDEP-NY037		
124-48-1	Dibromochloromethane	ND		ug/m³	0.852	1	EPA TO-15	01/07/2025 12:00	01/08/2025 06:51	YR
							Certifications:	NELAC-NY12058,NJDEP-NY037		
75-71-8	Dichlorodifluoromethane	ND		ug/m³	0.495	1	EPA TO-15	01/07/2025 12:00	01/08/2025 06:51	YR
							Certifications:	NELAC-NY12058,NJDEP-NY037		
141-78-6	* Ethyl acetate	ND		ug/m³	0.721	1	EPA TO-15	01/07/2025 12:00	01/08/2025 06:51	YR
							Certifications:			

Sample Information

Client Sample ID: CAN 28844 / FC 21023 **York Sample ID:** 25A1278-05

York Project (SDG) No.	Client Project ID	Matrix	Collection Date/Time	Date Received
25A1278	170361307	Air	January 22, 2025 3:00 pm	01/23/2025

VOA, TO15 MASTER **Log-in Notes:** **Sample Notes:**

Sample Prepared by Method: EPA TO15 PREP

CAS No.	Parameter	Result	Flag	Units	Reported to LOQ	Dilution	Reference Method	Date/Time Prepared	Date/Time Analyzed	Analyst
100-41-4	Ethyl Benzene	ND		ug/m³	0.434	1	EPA TO-15	01/07/2025 12:00	01/08/2025 06:51	YR
							Certifications: NELAC-NY12058,NJDEP-NY037			
87-68-3	Hexachlorobutadiene	ND		ug/m³	1.07	1	EPA TO-15	01/07/2025 12:00	01/08/2025 06:51	YR
							Certifications: NELAC-NY12058,NJDEP-NY037			
67-63-0	Isopropanol	ND		ug/m³	1.47	1	EPA TO-15	01/07/2025 12:00	01/08/2025 06:51	YR
							Certifications: NELAC-NY12058,NJDEP-NY037			
80-62-6	Methyl Methacrylate	ND		ug/m³	0.409	1	EPA TO-15	01/07/2025 12:00	01/08/2025 06:51	YR
							Certifications: NELAC-NY12058,NJDEP-NY037			
1634-04-4	Methyl tert-butyl ether (MTBE)	ND		ug/m³	0.361	1	EPA TO-15	01/07/2025 12:00	01/08/2025 06:51	YR
							Certifications: NELAC-NY12058,NJDEP-NY037			
75-09-2	Methylene chloride	ND		ug/m³	2.08	1	EPA TO-15	01/07/2025 12:00	01/08/2025 06:51	YR
							Certifications: NELAC-NY12058,NJDEP-NY037			
91-20-3	* Naphthalene	ND		ug/m³	1.05	1	EPA TO-15	01/07/2025 12:00	01/08/2025 06:51	YR
							Certifications: NJDEP-NY037			
142-82-5	n-Heptane	ND		ug/m³	0.410	1	EPA TO-15	01/07/2025 12:00	01/08/2025 06:51	YR
							Certifications: NELAC-NY12058,NJDEP-NY037			
110-54-3	n-Hexane	ND		ug/m³	0.352	1	EPA TO-15	01/07/2025 12:00	01/08/2025 06:51	YR
							Certifications: NELAC-NY12058,NJDEP-NY037			
95-47-6	o-Xylene	ND		ug/m³	0.434	1	EPA TO-15	01/07/2025 12:00	01/08/2025 06:51	YR
							Certifications: NELAC-NY12058,NJDEP-NY037			
179601-23-1	p- & m- Xylenes	ND		ug/m³	0.868	1	EPA TO-15	01/07/2025 12:00	01/08/2025 06:51	YR
							Certifications: NELAC-NY12058,NJDEP-NY037			
622-96-8	* p-Ethyltoluene	ND		ug/m³	0.492	1	EPA TO-15	01/07/2025 12:00	01/08/2025 06:51	YR
							Certifications:			
115-07-1	* Propylene	ND		ug/m³	0.172	1	EPA TO-15	01/07/2025 12:00	01/08/2025 06:51	YR
							Certifications:			
100-42-5	Styrene	ND		ug/m³	0.426	1	EPA TO-15	01/07/2025 12:00	01/08/2025 06:51	YR
							Certifications: NELAC-NY12058,NJDEP-NY037			
127-18-4	Tetrachloroethylene	ND		ug/m³	0.678	1	EPA TO-15	01/07/2025 12:00	01/08/2025 06:51	YR
							Certifications: NELAC-NY12058,NJDEP-NY037			
109-99-9	* Tetrahydrofuran	ND		ug/m³	0.590	1	EPA TO-15	01/07/2025 12:00	01/08/2025 06:51	YR
							Certifications:			
108-88-3	Toluene	ND		ug/m³	0.377	1	EPA TO-15	01/07/2025 12:00	01/08/2025 06:51	YR
							Certifications: NELAC-NY12058,NJDEP-NY037			
156-60-5	trans-1,2-Dichloroethylene	ND		ug/m³	0.396	1	EPA TO-15	01/07/2025 12:00	01/08/2025 06:51	YR
							Certifications: NELAC-NY12058,NJDEP-NY037			
10061-02-6	trans-1,3-Dichloropropylene	ND		ug/m³	0.454	1	EPA TO-15	01/07/2025 12:00	01/08/2025 06:51	YR
							Certifications: NELAC-NY12058,NJDEP-NY037			
79-01-6	Trichloroethylene	ND		ug/m³	0.134	1	EPA TO-15	01/07/2025 12:00	01/08/2025 06:51	YR
							Certifications: NELAC-NY12058,NJDEP-NY037			
75-69-4	Trichlorofluoromethane (Freon 11)	ND		ug/m³	0.562	1	EPA TO-15	01/07/2025 12:00	01/08/2025 06:51	YR
							Certifications: NELAC-NY12058,NJDEP-NY037			
108-05-4	Vinyl acetate	ND		ug/m³	0.352	1	EPA TO-15	01/07/2025 12:00	01/08/2025 06:51	YR
							Certifications: NELAC-NY12058,NJDEP-NY037			

Sample Information

Client Sample ID: CAN 28844 / FC 21023 **York Sample ID:** 25A1278-05

York Project (SDG) No.	Client Project ID	Matrix	Collection Date/Time	Date Received
25A1278	170361307	Air	January 22, 2025 3:00 pm	01/23/2025

VOA, TO15 MASTER

Log-in Notes:

Sample Notes:

Sample Prepared by Method: EPA TO15 PREP

CAS No.	Parameter	Result	Flag	Units	Reported to LOQ	Dilution	Reference Method	Date/Time Prepared	Date/Time Analyzed	Analyst
593-60-2	Vinyl bromide	ND		ug/m³	0.437	1	EPA TO-15	01/07/2025 12:00	01/08/2025 06:51	YR
							Certifications:	NELAC-NY12058,NJDEP-NY037		
75-01-4	Vinyl Chloride	ND		ug/m³	0.128	1	EPA TO-15	01/07/2025 12:00	01/08/2025 06:51	YR
							Certifications:	NELAC-NY12058,NJDEP-NY037		

Sample Information

Client Sample ID: CAN 28850 / FC 19428 **York Sample ID:** 25A1278-06

York Project (SDG) No.	Client Project ID	Matrix	Collection Date/Time	Date Received
25A1278	170361307	Air	January 22, 2025 3:00 pm	01/23/2025

VOA, TO15 MASTER **Log-in Notes:** **Sample Notes:**

Sample Prepared by Method: EPA TO15 PREP

CAS No.	Parameter	Result	Flag	Units	Reported to LOQ	Dilution	Reference Method	Date/Time Prepared	Date/Time Analyzed	Analyst
630-20-6	* 1,1,1,2-Tetrachloroethane	ND		ug/m³	0.687	1	EPA TO-15	01/14/2025 12:49	01/15/2025 10:06	YR
							Certifications:			
71-55-6	1,1,1-Trichloroethane	ND		ug/m³	0.546	1	EPA TO-15	01/14/2025 12:49	01/15/2025 10:06	YR
							Certifications:	NELAC-NY12058,NJDEP-NY037		
79-34-5	1,1,2,2-Tetrachloroethane	ND		ug/m³	0.687	1	EPA TO-15	01/14/2025 12:49	01/15/2025 10:06	YR
							Certifications:	NELAC-NY12058,NJDEP-NY037		
76-13-1	1,1,2-Trichloro-1,2,2-trifluoroethane (Freon 113)	ND		ug/m³	0.766	1	EPA TO-15	01/14/2025 12:49	01/15/2025 10:06	YR
							Certifications:	NELAC-NY12058,NJDEP-NY037		
79-00-5	1,1,2-Trichloroethane	ND		ug/m³	0.546	1	EPA TO-15	01/14/2025 12:49	01/15/2025 10:06	YR
							Certifications:	NELAC-NY12058,NJDEP-NY037		
75-34-3	1,1-Dichloroethane	ND		ug/m³	0.405	1	EPA TO-15	01/14/2025 12:49	01/15/2025 10:06	YR
							Certifications:	NELAC-NY12058,NJDEP-NY037		
75-35-4	1,1-Dichloroethylene	ND		ug/m³	0.198	1	EPA TO-15	01/14/2025 12:49	01/15/2025 10:06	YR
							Certifications:	NELAC-NY12058,NJDEP-NY037		
120-82-1	1,2,4-Trichlorobenzene	ND		ug/m³	0.742	1	EPA TO-15	01/14/2025 12:49	01/15/2025 10:06	YR
							Certifications:	NELAC-NY12058,NJDEP-NY037		
95-63-6	1,2,4-Trimethylbenzene	ND		ug/m³	0.492	1	EPA TO-15	01/14/2025 12:49	01/15/2025 10:06	YR
							Certifications:	NELAC-NY12058,NJDEP-NY037		
106-93-4	1,2-Dibromoethane	ND		ug/m³	0.768	1	EPA TO-15	01/14/2025 12:49	01/15/2025 10:06	YR
							Certifications:	NELAC-NY12058,NJDEP-NY037		
95-50-1	1,2-Dichlorobenzene	ND		ug/m³	0.601	1	EPA TO-15	01/14/2025 12:49	01/15/2025 10:06	YR
							Certifications:	NELAC-NY12058,NJDEP-NY037		
107-06-2	1,2-Dichloroethane	ND		ug/m³	0.405	1	EPA TO-15	01/14/2025 12:49	01/15/2025 10:06	YR
							Certifications:	NELAC-NY12058,NJDEP-NY037		
78-87-5	1,2-Dichloropropane	ND		ug/m³	0.462	1	EPA TO-15	01/14/2025 12:49	01/15/2025 10:06	YR
							Certifications:	NELAC-NY12058,NJDEP-NY037		
76-14-2	1,2-Dichlorotetrafluoroethane	ND		ug/m³	0.699	1	EPA TO-15	01/14/2025 12:49	01/15/2025 10:06	YR
							Certifications:	NELAC-NY12058,NJDEP-NY037		
108-67-8	1,3,5-Trimethylbenzene	ND		ug/m³	0.492	1	EPA TO-15	01/14/2025 12:49	01/15/2025 10:06	YR
							Certifications:	NELAC-NY12058,NJDEP-NY037		
106-99-0	1,3-Butadiene	ND		ug/m³	0.664	1	EPA TO-15	01/14/2025 12:49	01/15/2025 10:06	YR
							Certifications:	NELAC-NY12058,NJDEP-NY037		
541-73-1	1,3-Dichlorobenzene	ND		ug/m³	0.601	1	EPA TO-15	01/14/2025 12:49	01/15/2025 10:06	YR
							Certifications:	NELAC-NY12058,NJDEP-NY037		
142-28-9	* 1,3-Dichloropropane	ND		ug/m³	0.462	1	EPA TO-15	01/14/2025 12:49	01/15/2025 10:06	YR
							Certifications:			
106-46-7	1,4-Dichlorobenzene	ND		ug/m³	0.601	1	EPA TO-15	01/14/2025 12:49	01/15/2025 10:06	YR
							Certifications:	NELAC-NY12058,NJDEP-NY037		
123-91-1	1,4-Dioxane	ND		ug/m³	0.721	1	EPA TO-15	01/14/2025 12:49	01/15/2025 10:06	YR
							Certifications:	NELAC-NY12058,NJDEP-NY037		
540-84-1	* 2,2,4-Trimethylpentane	ND		ug/m³	0.234	1	EPA TO-15	01/14/2025 12:49	01/15/2025 10:06	YR
							Certifications:			
78-93-3	2-Butanone	ND		ug/m³	0.295	1	EPA TO-15	01/14/2025 12:49	01/15/2025 10:06	YR
							Certifications:	NELAC-NY12058,NJDEP-NY037		

Sample Information

Client Sample ID: CAN 28850 / FC 19428 **York Sample ID:** 25A1278-06

York Project (SDG) No.	Client Project ID	Matrix	Collection Date/Time	Date Received
25A1278	170361307	Air	January 22, 2025 3:00 pm	01/23/2025

VOA, TO15 MASTER **Log-in Notes:** **Sample Notes:**

Sample Prepared by Method: EPA TO15 PREP

CAS No.	Parameter	Result	Flag	Units	Reported to LOQ	Dilution	Reference Method	Date/Time Prepared	Date/Time Analyzed	Analyst
591-78-6	* 2-Hexanone	ND		ug/m³	0.819	1	EPA TO-15	01/14/2025 12:49	01/15/2025 10:06	YR
							Certifications:			
107-05-1	3-Chloropropene	ND		ug/m³	1.57	1	EPA TO-15	01/14/2025 12:49	01/15/2025 10:06	YR
							Certifications:	NELAC-NY12058,NJDEP-NY037		
108-10-1	4-Methyl-2-pentanone	ND		ug/m³	0.410	1	EPA TO-15	01/14/2025 12:49	01/15/2025 10:06	YR
							Certifications:	NELAC-NY12058,NJDEP-NY037		
67-64-1	Acetone	ND		ug/m³	1.90	1	EPA TO-15	01/14/2025 12:49	01/15/2025 10:06	YR
							Certifications:	NELAC-NY12058,NJDEP-NY037		
107-13-1	Acrylonitrile	ND		ug/m³	2.82	1	EPA TO-15	01/14/2025 12:49	01/15/2025 10:06	YR
							Certifications:	NELAC-NY12058,NJDEP-NY037		
71-43-2	Benzene	ND		ug/m³	0.319	1	EPA TO-15	01/14/2025 12:49	01/15/2025 10:06	YR
							Certifications:	NELAC-NY12058,NJDEP-NY037		
100-44-7	Benzyl chloride	ND		ug/m³	0.518	1	EPA TO-15	01/14/2025 12:49	01/15/2025 10:06	YR
							Certifications:	NELAC-NY12058,NJDEP-NY037		
75-27-4	Bromodichloromethane	ND		ug/m³	0.670	1	EPA TO-15	01/14/2025 12:49	01/15/2025 10:06	YR
							Certifications:	NELAC-NY12058,NJDEP-NY037		
75-25-2	Bromoform	ND		ug/m³	1.03	1	EPA TO-15	01/14/2025 12:49	01/15/2025 10:06	YR
							Certifications:	NELAC-NY12058,NJDEP-NY037		
74-83-9	Bromomethane	ND		ug/m³	0.388	1	EPA TO-15	01/14/2025 12:49	01/15/2025 10:06	YR
							Certifications:	NELAC-NY12058,NJDEP-NY037		
75-15-0	Carbon disulfide	ND		ug/m³	0.311	1	EPA TO-15	01/14/2025 12:49	01/15/2025 10:06	YR
							Certifications:	NELAC-NY12058,NJDEP-NY037		
56-23-5	Carbon tetrachloride	ND		ug/m³	0.157	1	EPA TO-15	01/14/2025 12:49	01/15/2025 10:06	YR
							Certifications:	NELAC-NY12058,NJDEP-NY037		
108-90-7	Chlorobenzene	ND		ug/m³	0.460	1	EPA TO-15	01/14/2025 12:49	01/15/2025 10:06	YR
							Certifications:	NELAC-NY12058,NJDEP-NY037		
75-00-3	Chloroethane	ND		ug/m³	0.264	1	EPA TO-15	01/14/2025 12:49	01/15/2025 10:06	YR
							Certifications:	NELAC-NY12058,NJDEP-NY037		
67-66-3	Chloroform	ND		ug/m³	0.488	1	EPA TO-15	01/14/2025 12:49	01/15/2025 10:06	YR
							Certifications:	NELAC-NY12058,NJDEP-NY037		
74-87-3	Chloromethane	ND		ug/m³	0.207	1	EPA TO-15	01/14/2025 12:49	01/15/2025 10:06	YR
							Certifications:	NELAC-NY12058,NJDEP-NY037		
156-59-2	cis-1,2-Dichloroethylene	ND		ug/m³	0.198	1	EPA TO-15	01/14/2025 12:49	01/15/2025 10:06	YR
							Certifications:	NELAC-NY12058,NJDEP-NY037		
10061-01-5	cis-1,3-Dichloropropylene	ND		ug/m³	0.454	1	EPA TO-15	01/14/2025 12:49	01/15/2025 10:06	YR
							Certifications:	NELAC-NY12058,NJDEP-NY037		
110-82-7	Cyclohexane	ND		ug/m³	0.344	1	EPA TO-15	01/14/2025 12:49	01/15/2025 10:06	YR
							Certifications:	NELAC-NY12058,NJDEP-NY037		
124-48-1	Dibromochloromethane	ND		ug/m³	0.852	1	EPA TO-15	01/14/2025 12:49	01/15/2025 10:06	YR
							Certifications:	NELAC-NY12058,NJDEP-NY037		
75-71-8	Dichlorodifluoromethane	ND		ug/m³	0.495	1	EPA TO-15	01/14/2025 12:49	01/15/2025 10:06	YR
							Certifications:	NELAC-NY12058,NJDEP-NY037		
141-78-6	* Ethyl acetate	ND		ug/m³	0.721	1	EPA TO-15	01/14/2025 12:49	01/15/2025 10:06	YR
							Certifications:			

Sample Information

Client Sample ID: CAN 28850 / FC 19428 **York Sample ID:** 25A1278-06

York Project (SDG) No.	Client Project ID	Matrix	Collection Date/Time	Date Received
25A1278	170361307	Air	January 22, 2025 3:00 pm	01/23/2025

VOA, TO15 MASTER **Log-in Notes:** **Sample Notes:**

Sample Prepared by Method: EPA TO15 PREP

CAS No.	Parameter	Result	Flag	Units	Reported to LOQ	Dilution	Reference Method	Date/Time Prepared	Date/Time Analyzed	Analyst
100-41-4	Ethyl Benzene	ND		ug/m³	0.434	1	EPA TO-15	01/14/2025 12:49	01/15/2025 10:06	YR
							Certifications: NELAC-NY12058,NJDEP-NY037			
87-68-3	Hexachlorobutadiene	ND		ug/m³	1.07	1	EPA TO-15	01/14/2025 12:49	01/15/2025 10:06	YR
							Certifications: NELAC-NY12058,NJDEP-NY037			
67-63-0	Isopropanol	ND		ug/m³	1.47	1	EPA TO-15	01/14/2025 12:49	01/15/2025 10:06	YR
							Certifications: NELAC-NY12058,NJDEP-NY037			
80-62-6	Methyl Methacrylate	ND		ug/m³	0.409	1	EPA TO-15	01/14/2025 12:49	01/15/2025 10:06	YR
							Certifications: NELAC-NY12058,NJDEP-NY037			
1634-04-4	Methyl tert-butyl ether (MTBE)	ND		ug/m³	0.361	1	EPA TO-15	01/14/2025 12:49	01/15/2025 10:06	YR
							Certifications: NELAC-NY12058,NJDEP-NY037			
75-09-2	Methylene chloride	ND		ug/m³	2.08	1	EPA TO-15	01/14/2025 12:49	01/15/2025 10:06	YR
							Certifications: NELAC-NY12058,NJDEP-NY037			
91-20-3	* Naphthalene	ND		ug/m³	1.05	1	EPA TO-15	01/14/2025 12:49	01/15/2025 10:06	YR
							Certifications: NJDEP-NY037			
142-82-5	n-Heptane	ND		ug/m³	0.410	1	EPA TO-15	01/14/2025 12:49	01/15/2025 10:06	YR
							Certifications: NELAC-NY12058,NJDEP-NY037			
110-54-3	n-Hexane	ND		ug/m³	0.352	1	EPA TO-15	01/14/2025 12:49	01/15/2025 10:06	YR
							Certifications: NELAC-NY12058,NJDEP-NY037			
95-47-6	o-Xylene	ND		ug/m³	0.434	1	EPA TO-15	01/14/2025 12:49	01/15/2025 10:06	YR
							Certifications: NELAC-NY12058,NJDEP-NY037			
179601-23-1	p- & m- Xylenes	ND		ug/m³	0.868	1	EPA TO-15	01/14/2025 12:49	01/15/2025 10:06	YR
							Certifications: NELAC-NY12058,NJDEP-NY037			
622-96-8	* p-Ethyltoluene	ND		ug/m³	0.492	1	EPA TO-15	01/14/2025 12:49	01/15/2025 10:06	YR
							Certifications:			
115-07-1	* Propylene	ND		ug/m³	0.172	1	EPA TO-15	01/14/2025 12:49	01/15/2025 10:06	YR
							Certifications:			
100-42-5	Styrene	ND		ug/m³	0.426	1	EPA TO-15	01/14/2025 12:49	01/15/2025 10:06	YR
							Certifications: NELAC-NY12058,NJDEP-NY037			
127-18-4	Tetrachloroethylene	ND		ug/m³	0.678	1	EPA TO-15	01/14/2025 12:49	01/15/2025 10:06	YR
							Certifications: NELAC-NY12058,NJDEP-NY037			
109-99-9	* Tetrahydrofuran	ND		ug/m³	0.590	1	EPA TO-15	01/14/2025 12:49	01/15/2025 10:06	YR
							Certifications:			
108-88-3	Toluene	ND		ug/m³	0.377	1	EPA TO-15	01/14/2025 12:49	01/15/2025 10:06	YR
							Certifications: NELAC-NY12058,NJDEP-NY037			
156-60-5	trans-1,2-Dichloroethylene	ND		ug/m³	0.396	1	EPA TO-15	01/14/2025 12:49	01/15/2025 10:06	YR
							Certifications: NELAC-NY12058,NJDEP-NY037			
10061-02-6	trans-1,3-Dichloropropylene	ND		ug/m³	0.454	1	EPA TO-15	01/14/2025 12:49	01/15/2025 10:06	YR
							Certifications: NELAC-NY12058,NJDEP-NY037			
79-01-6	Trichloroethylene	ND		ug/m³	0.134	1	EPA TO-15	01/14/2025 12:49	01/15/2025 10:06	YR
							Certifications: NELAC-NY12058,NJDEP-NY037			
75-69-4	Trichlorofluoromethane (Freon 11)	ND		ug/m³	0.562	1	EPA TO-15	01/14/2025 12:49	01/15/2025 10:06	YR
							Certifications: NELAC-NY12058,NJDEP-NY037			
108-05-4	Vinyl acetate	ND		ug/m³	0.352	1	EPA TO-15	01/14/2025 12:49	01/15/2025 10:06	YR
							Certifications: NELAC-NY12058,NJDEP-NY037			

Sample Information

Client Sample ID: CAN 28850 / FC 19428 **York Sample ID:** 25A1278-06

York Project (SDG) No.	Client Project ID	Matrix	Collection Date/Time	Date Received
25A1278	170361307	Air	January 22, 2025 3:00 pm	01/23/2025

VOA, TO15 MASTER

Log-in Notes:

Sample Notes:

Sample Prepared by Method: EPA TO15 PREP

CAS No.	Parameter	Result	Flag	Units	Reported to LOQ	Dilution	Reference Method	Date/Time Prepared	Date/Time Analyzed	Analyst
593-60-2	Vinyl bromide	ND		ug/m³	0.437	1	EPA TO-15	01/14/2025 12:49	01/15/2025 10:06	YR
							Certifications:	NELAC-NY12058,NJDEP-NY037		
75-01-4	Vinyl Chloride	ND		ug/m³	0.128	1	EPA TO-15	01/14/2025 12:49	01/15/2025 10:06	YR
							Certifications:	NELAC-NY12058,NJDEP-NY037		

Sample Information

Client Sample ID: CAN 48288 / FC 21021 **York Sample ID:** 25A1278-07

York Project (SDG) No.	Client Project ID	Matrix	Collection Date/Time	Date Received
25A1278	170361307	Air	January 22, 2025 3:00 pm	01/23/2025

VOA, TO15 MASTER **Log-in Notes:** **Sample Notes:**

Sample Prepared by Method: EPA TO15 PREP

CAS No.	Parameter	Result	Flag	Units	Reported to LOQ	Dilution	Reference Method	Date/Time Prepared	Date/Time Analyzed	Analyst
630-20-6	* 1,1,1,2-Tetrachloroethane	ND		ug/m³	0.687	1	EPA TO-15	01/02/2025 10:00	01/03/2025 15:43	YR
							Certifications:			
71-55-6	1,1,1-Trichloroethane	ND		ug/m³	0.546	1	EPA TO-15	01/02/2025 10:00	01/03/2025 15:43	YR
							Certifications:	NELAC-NY12058,NJDEP-NY037		
79-34-5	1,1,2,2-Tetrachloroethane	ND		ug/m³	0.687	1	EPA TO-15	01/02/2025 10:00	01/03/2025 15:43	YR
							Certifications:	NELAC-NY12058,NJDEP-NY037		
76-13-1	1,1,2-Trichloro-1,2,2-trifluoroethane (Freon 113)	ND		ug/m³	0.766	1	EPA TO-15	01/02/2025 10:00	01/03/2025 15:43	YR
							Certifications:	NELAC-NY12058,NJDEP-NY037		
79-00-5	1,1,2-Trichloroethane	ND		ug/m³	0.546	1	EPA TO-15	01/02/2025 10:00	01/03/2025 15:43	YR
							Certifications:	NELAC-NY12058,NJDEP-NY037		
75-34-3	1,1-Dichloroethane	ND		ug/m³	0.405	1	EPA TO-15	01/02/2025 10:00	01/03/2025 15:43	YR
							Certifications:	NELAC-NY12058,NJDEP-NY037		
75-35-4	1,1-Dichloroethylene	ND		ug/m³	0.198	1	EPA TO-15	01/02/2025 10:00	01/03/2025 15:43	YR
							Certifications:	NELAC-NY12058,NJDEP-NY037		
120-82-1	1,2,4-Trichlorobenzene	ND		ug/m³	0.742	1	EPA TO-15	01/02/2025 10:00	01/03/2025 15:43	YR
							Certifications:	NELAC-NY12058,NJDEP-NY037		
95-63-6	1,2,4-Trimethylbenzene	ND		ug/m³	0.492	1	EPA TO-15	01/02/2025 10:00	01/03/2025 15:43	YR
							Certifications:	NELAC-NY12058,NJDEP-NY037		
106-93-4	1,2-Dibromoethane	ND		ug/m³	0.768	1	EPA TO-15	01/02/2025 10:00	01/03/2025 15:43	YR
							Certifications:	NELAC-NY12058,NJDEP-NY037		
95-50-1	1,2-Dichlorobenzene	ND		ug/m³	0.601	1	EPA TO-15	01/02/2025 10:00	01/03/2025 15:43	YR
							Certifications:	NELAC-NY12058,NJDEP-NY037		
107-06-2	1,2-Dichloroethane	ND		ug/m³	0.405	1	EPA TO-15	01/02/2025 10:00	01/03/2025 15:43	YR
							Certifications:	NELAC-NY12058,NJDEP-NY037		
78-87-5	1,2-Dichloropropane	ND		ug/m³	0.462	1	EPA TO-15	01/02/2025 10:00	01/03/2025 15:43	YR
							Certifications:	NELAC-NY12058,NJDEP-NY037		
76-14-2	1,2-Dichlorotetrafluoroethane	ND		ug/m³	0.699	1	EPA TO-15	01/02/2025 10:00	01/03/2025 15:43	YR
							Certifications:	NELAC-NY12058,NJDEP-NY037		
108-67-8	1,3,5-Trimethylbenzene	ND		ug/m³	0.492	1	EPA TO-15	01/02/2025 10:00	01/03/2025 15:43	YR
							Certifications:	NELAC-NY12058,NJDEP-NY037		
106-99-0	1,3-Butadiene	ND		ug/m³	0.664	1	EPA TO-15	01/02/2025 10:00	01/03/2025 15:43	YR
							Certifications:	NELAC-NY12058,NJDEP-NY037		
541-73-1	1,3-Dichlorobenzene	ND		ug/m³	0.601	1	EPA TO-15	01/02/2025 10:00	01/03/2025 15:43	YR
							Certifications:	NELAC-NY12058,NJDEP-NY037		
142-28-9	* 1,3-Dichloropropane	ND		ug/m³	0.462	1	EPA TO-15	01/02/2025 10:00	01/03/2025 15:43	YR
							Certifications:			
106-46-7	1,4-Dichlorobenzene	ND		ug/m³	0.601	1	EPA TO-15	01/02/2025 10:00	01/03/2025 15:43	YR
							Certifications:	NELAC-NY12058,NJDEP-NY037		
123-91-1	1,4-Dioxane	ND		ug/m³	0.721	1	EPA TO-15	01/02/2025 10:00	01/03/2025 15:43	YR
							Certifications:	NELAC-NY12058,NJDEP-NY037		
540-84-1	* 2,2,4-Trimethylpentane	ND		ug/m³	0.234	1	EPA TO-15	01/02/2025 10:00	01/03/2025 15:43	YR
							Certifications:			
78-93-3	2-Butanone	ND		ug/m³	0.295	1	EPA TO-15	01/02/2025 10:00	01/03/2025 15:43	YR
							Certifications:	NELAC-NY12058,NJDEP-NY037		

Sample Information

Client Sample ID: CAN 48288 / FC 21021 **York Sample ID:** 25A1278-07

York Project (SDG) No.	Client Project ID	Matrix	Collection Date/Time	Date Received
25A1278	170361307	Air	January 22, 2025 3:00 pm	01/23/2025

VOA, TO15 MASTER **Log-in Notes:** **Sample Notes:**

Sample Prepared by Method: EPA TO15 PREP

CAS No.	Parameter	Result	Flag	Units	Reported to LOQ	Dilution	Reference Method	Date/Time Prepared	Date/Time Analyzed	Analyst
591-78-6	* 2-Hexanone	ND		ug/m³	0.819	1	EPA TO-15	01/02/2025 10:00	01/03/2025 15:43	YR
							Certifications:			
107-05-1	3-Chloropropene	ND		ug/m³	1.57	1	EPA TO-15	01/02/2025 10:00	01/03/2025 15:43	YR
							Certifications:	NELAC-NY12058,NJDEP-NY037		
108-10-1	4-Methyl-2-pentanone	ND		ug/m³	0.410	1	EPA TO-15	01/02/2025 10:00	01/03/2025 15:43	YR
							Certifications:	NELAC-NY12058,NJDEP-NY037		
67-64-1	Acetone	ND		ug/m³	1.90	1	EPA TO-15	01/02/2025 10:00	01/03/2025 15:43	YR
							Certifications:	NELAC-NY12058,NJDEP-NY037		
107-13-1	Acrylonitrile	ND		ug/m³	2.82	1	EPA TO-15	01/02/2025 10:00	01/03/2025 15:43	YR
							Certifications:	NELAC-NY12058,NJDEP-NY037		
71-43-2	Benzene	ND		ug/m³	0.319	1	EPA TO-15	01/02/2025 10:00	01/03/2025 15:43	YR
							Certifications:	NELAC-NY12058,NJDEP-NY037		
100-44-7	Benzyl chloride	ND		ug/m³	0.518	1	EPA TO-15	01/02/2025 10:00	01/03/2025 15:43	YR
							Certifications:	NELAC-NY12058,NJDEP-NY037		
75-27-4	Bromodichloromethane	ND		ug/m³	0.670	1	EPA TO-15	01/02/2025 10:00	01/03/2025 15:43	YR
							Certifications:	NELAC-NY12058,NJDEP-NY037		
75-25-2	Bromoform	ND		ug/m³	1.03	1	EPA TO-15	01/02/2025 10:00	01/03/2025 15:43	YR
							Certifications:	NELAC-NY12058,NJDEP-NY037		
74-83-9	Bromomethane	ND		ug/m³	0.388	1	EPA TO-15	01/02/2025 10:00	01/03/2025 15:43	YR
							Certifications:	NELAC-NY12058,NJDEP-NY037		
75-15-0	Carbon disulfide	ND		ug/m³	0.311	1	EPA TO-15	01/02/2025 10:00	01/03/2025 15:43	YR
							Certifications:	NELAC-NY12058,NJDEP-NY037		
56-23-5	Carbon tetrachloride	ND		ug/m³	0.157	1	EPA TO-15	01/02/2025 10:00	01/03/2025 15:43	YR
							Certifications:	NELAC-NY12058,NJDEP-NY037		
108-90-7	Chlorobenzene	ND		ug/m³	0.460	1	EPA TO-15	01/02/2025 10:00	01/03/2025 15:43	YR
							Certifications:	NELAC-NY12058,NJDEP-NY037		
75-00-3	Chloroethane	ND		ug/m³	0.264	1	EPA TO-15	01/02/2025 10:00	01/03/2025 15:43	YR
							Certifications:	NELAC-NY12058,NJDEP-NY037		
67-66-3	Chloroform	ND		ug/m³	0.488	1	EPA TO-15	01/02/2025 10:00	01/03/2025 15:43	YR
							Certifications:	NELAC-NY12058,NJDEP-NY037		
74-87-3	Chloromethane	ND		ug/m³	0.207	1	EPA TO-15	01/02/2025 10:00	01/03/2025 15:43	YR
							Certifications:	NELAC-NY12058,NJDEP-NY037		
156-59-2	cis-1,2-Dichloroethylene	ND		ug/m³	0.198	1	EPA TO-15	01/02/2025 10:00	01/03/2025 15:43	YR
							Certifications:	NELAC-NY12058,NJDEP-NY037		
10061-01-5	cis-1,3-Dichloropropylene	ND		ug/m³	0.454	1	EPA TO-15	01/02/2025 10:00	01/03/2025 15:43	YR
							Certifications:	NELAC-NY12058,NJDEP-NY037		
110-82-7	Cyclohexane	ND		ug/m³	0.344	1	EPA TO-15	01/02/2025 10:00	01/03/2025 15:43	YR
							Certifications:	NELAC-NY12058,NJDEP-NY037		
124-48-1	Dibromochloromethane	ND		ug/m³	0.852	1	EPA TO-15	01/02/2025 10:00	01/03/2025 15:43	YR
							Certifications:	NELAC-NY12058,NJDEP-NY037		
75-71-8	Dichlorodifluoromethane	ND		ug/m³	0.495	1	EPA TO-15	01/02/2025 10:00	01/03/2025 15:43	YR
							Certifications:	NELAC-NY12058,NJDEP-NY037		
141-78-6	* Ethyl acetate	ND		ug/m³	0.721	1	EPA TO-15	01/02/2025 10:00	01/03/2025 15:43	YR
							Certifications:			

Sample Information

Client Sample ID: CAN 48288 / FC 21021 **York Sample ID:** 25A1278-07

York Project (SDG) No.	Client Project ID	Matrix	Collection Date/Time	Date Received
25A1278	170361307	Air	January 22, 2025 3:00 pm	01/23/2025

VOA, TO15 MASTER **Log-in Notes:** **Sample Notes:**

Sample Prepared by Method: EPA TO15 PREP

CAS No.	Parameter	Result	Flag	Units	Reported to LOQ	Dilution	Reference Method	Date/Time Prepared	Date/Time Analyzed	Analyst
100-41-4	Ethyl Benzene	ND		ug/m³	0.434	1	EPA TO-15	01/02/2025 10:00	01/03/2025 15:43	YR
							Certifications:	NELAC-NY12058,NJDEP-NY037		
87-68-3	Hexachlorobutadiene	ND		ug/m³	1.07	1	EPA TO-15	01/02/2025 10:00	01/03/2025 15:43	YR
							Certifications:	NELAC-NY12058,NJDEP-NY037		
67-63-0	Isopropanol	ND		ug/m³	1.47	1	EPA TO-15	01/02/2025 10:00	01/03/2025 15:43	YR
							Certifications:	NELAC-NY12058,NJDEP-NY037		
80-62-6	Methyl Methacrylate	ND		ug/m³	0.409	1	EPA TO-15	01/02/2025 10:00	01/03/2025 15:43	YR
							Certifications:	NELAC-NY12058,NJDEP-NY037		
1634-04-4	Methyl tert-butyl ether (MTBE)	ND		ug/m³	0.361	1	EPA TO-15	01/02/2025 10:00	01/03/2025 15:43	YR
							Certifications:	NELAC-NY12058,NJDEP-NY037		
75-09-2	Methylene chloride	ND		ug/m³	2.08	1	EPA TO-15	01/02/2025 10:00	01/03/2025 15:43	YR
							Certifications:	NELAC-NY12058,NJDEP-NY037		
91-20-3	* Naphthalene	ND		ug/m³	1.05	1	EPA TO-15	01/02/2025 10:00	01/03/2025 15:43	YR
							Certifications:	NJDEP-NY037		
142-82-5	n-Heptane	ND		ug/m³	0.410	1	EPA TO-15	01/02/2025 10:00	01/03/2025 15:43	YR
							Certifications:	NELAC-NY12058,NJDEP-NY037		
110-54-3	n-Hexane	ND		ug/m³	0.352	1	EPA TO-15	01/02/2025 10:00	01/03/2025 15:43	YR
							Certifications:	NELAC-NY12058,NJDEP-NY037		
95-47-6	o-Xylene	ND		ug/m³	0.434	1	EPA TO-15	01/02/2025 10:00	01/03/2025 15:43	YR
							Certifications:	NELAC-NY12058,NJDEP-NY037		
179601-23-1	p- & m- Xylenes	ND		ug/m³	0.868	1	EPA TO-15	01/02/2025 10:00	01/03/2025 15:43	YR
							Certifications:	NELAC-NY12058,NJDEP-NY037		
622-96-8	* p-Ethyltoluene	ND		ug/m³	0.492	1	EPA TO-15	01/02/2025 10:00	01/03/2025 15:43	YR
							Certifications:			
115-07-1	* Propylene	ND		ug/m³	0.172	1	EPA TO-15	01/02/2025 10:00	01/03/2025 15:43	YR
							Certifications:			
100-42-5	Styrene	ND		ug/m³	0.426	1	EPA TO-15	01/02/2025 10:00	01/03/2025 15:43	YR
							Certifications:	NELAC-NY12058,NJDEP-NY037		
127-18-4	Tetrachloroethylene	ND		ug/m³	0.678	1	EPA TO-15	01/02/2025 10:00	01/03/2025 15:43	YR
							Certifications:	NELAC-NY12058,NJDEP-NY037		
109-99-9	* Tetrahydrofuran	ND		ug/m³	0.590	1	EPA TO-15	01/02/2025 10:00	01/03/2025 15:43	YR
							Certifications:			
108-88-3	Toluene	ND		ug/m³	0.377	1	EPA TO-15	01/02/2025 10:00	01/03/2025 15:43	YR
							Certifications:	NELAC-NY12058,NJDEP-NY037		
156-60-5	trans-1,2-Dichloroethylene	ND		ug/m³	0.396	1	EPA TO-15	01/02/2025 10:00	01/03/2025 15:43	YR
							Certifications:	NELAC-NY12058,NJDEP-NY037		
10061-02-6	trans-1,3-Dichloropropylene	ND		ug/m³	0.454	1	EPA TO-15	01/02/2025 10:00	01/03/2025 15:43	YR
							Certifications:	NELAC-NY12058,NJDEP-NY037		
79-01-6	Trichloroethylene	ND		ug/m³	0.134	1	EPA TO-15	01/02/2025 10:00	01/03/2025 15:43	YR
							Certifications:	NELAC-NY12058,NJDEP-NY037		
75-69-4	Trichlorofluoromethane (Freon 11)	ND		ug/m³	0.562	1	EPA TO-15	01/02/2025 10:00	01/03/2025 15:43	YR
							Certifications:	NELAC-NY12058,NJDEP-NY037		
108-05-4	Vinyl acetate	ND		ug/m³	0.352	1	EPA TO-15	01/02/2025 10:00	01/03/2025 15:43	YR
							Certifications:	NELAC-NY12058,NJDEP-NY037		

Sample Information

Client Sample ID: CAN 48288 / FC 21021 **York Sample ID:** 25A1278-07

York Project (SDG) No.	Client Project ID	Matrix	Collection Date/Time	Date Received
25A1278	170361307	Air	January 22, 2025 3:00 pm	01/23/2025

VOA, TO15 MASTER

Log-in Notes:

Sample Notes:

Sample Prepared by Method: EPA TO15 PREP

CAS No.	Parameter	Result	Flag	Units	Reported to LOQ	Dilution	Reference Method	Date/Time Prepared	Date/Time Analyzed	Analyst
593-60-2	Vinyl bromide	ND		ug/m³	0.437	1	EPA TO-15	01/02/2025 10:00	01/03/2025 15:43	YR
							Certifications:	NELAC-NY12058,NJDEP-NY037		
75-01-4	Vinyl Chloride	ND		ug/m³	0.128	1	EPA TO-15	01/02/2025 10:00	01/03/2025 15:43	YR
							Certifications:	NELAC-NY12058,NJDEP-NY037		

Sample Information

Client Sample ID: IA01_012825 **York Sample ID:** 25A1549-01

York Project (SDG) No.	Client Project ID	Matrix	Collection Date/Time	Date Received
25A1549	170361307	Indoor Ambient Air	January 28, 2025 8:51 am	01/28/2025

VOA, TO15 MASTER **Log-in Notes:** **Sample Notes:**

Sample Prepared by Method: EPA TO15 PREP

CAS No.	Parameter	Result	Flag	Units	Reported to LOQ	Dilution	Reference Method	Date/Time Prepared	Date/Time Analyzed	Analyst
630-20-6	* 1,1,1,2-Tetrachloroethane	ND		ug/m³	0.606	0.883	EPA TO-15	01/28/2025 12:06	01/28/2025 15:10	YR
							Certifications:			
71-55-6	1,1,1-Trichloroethane	ND		ug/m³	0.482	0.883	EPA TO-15	01/28/2025 12:06	01/28/2025 15:10	YR
							Certifications:	NELAC-NY12058,NJDEP-NY037		
79-34-5	1,1,2,2-Tetrachloroethane	ND		ug/m³	0.606	0.883	EPA TO-15	01/28/2025 12:06	01/28/2025 15:10	YR
							Certifications:	NELAC-NY12058,NJDEP-NY037		
76-13-1	1,1,2-Trichloro-1,2,2-trifluoroethane (Freon 113)	ND		ug/m³	0.677	0.883	EPA TO-15	01/28/2025 12:06	01/28/2025 15:10	YR
							Certifications:	NELAC-NY12058,NJDEP-NY037		
79-00-5	1,1,2-Trichloroethane	ND		ug/m³	0.482	0.883	EPA TO-15	01/28/2025 12:06	01/28/2025 15:10	YR
							Certifications:	NELAC-NY12058,NJDEP-NY037		
75-34-3	1,1-Dichloroethane	ND		ug/m³	0.357	0.883	EPA TO-15	01/28/2025 12:06	01/28/2025 15:10	YR
							Certifications:	NELAC-NY12058,NJDEP-NY037		
75-35-4	1,1-Dichloroethylene	ND		ug/m³	0.175	0.883	EPA TO-15	01/28/2025 12:06	01/28/2025 15:10	YR
							Certifications:	NELAC-NY12058,NJDEP-NY037		
120-82-1	**1,2,4-Trichlorobenzene**	**1.38**		ug/m³	0.655	0.883	EPA TO-15	01/28/2025 12:06	01/28/2025 15:10	YR
							Certifications:	NELAC-NY12058,NJDEP-NY037		
95-63-6	1,2,4-Trimethylbenzene	ND		ug/m³	0.434	0.883	EPA TO-15	01/28/2025 12:06	01/28/2025 15:10	YR
							Certifications:	NELAC-NY12058,NJDEP-NY037		
106-93-4	1,2-Dibromoethane	ND		ug/m³	0.678	0.883	EPA TO-15	01/28/2025 12:06	01/28/2025 15:10	YR
							Certifications:	NELAC-NY12058,NJDEP-NY037		
95-50-1	1,2-Dichlorobenzene	ND		ug/m³	0.531	0.883	EPA TO-15	01/28/2025 12:06	01/28/2025 15:10	YR
							Certifications:	NELAC-NY12058,NJDEP-NY037		
107-06-2	1,2-Dichloroethane	ND		ug/m³	0.357	0.883	EPA TO-15	01/28/2025 12:06	01/28/2025 15:10	YR
							Certifications:	NELAC-NY12058,NJDEP-NY037		
78-87-5	1,2-Dichloropropane	ND		ug/m³	0.408	0.883	EPA TO-15	01/28/2025 12:06	01/28/2025 15:10	YR
							Certifications:	NELAC-NY12058,NJDEP-NY037		
76-14-2	1,2-Dichlorotetrafluoroethane	ND		ug/m³	0.617	0.883	EPA TO-15	01/28/2025 12:06	01/28/2025 15:10	YR
							Certifications:	NELAC-NY12058,NJDEP-NY037		
108-67-8	1,3,5-Trimethylbenzene	ND		ug/m³	0.434	0.883	EPA TO-15	01/28/2025 12:06	01/28/2025 15:10	YR
							Certifications:	NELAC-NY12058,NJDEP-NY037		
106-99-0	1,3-Butadiene	ND		ug/m³	0.586	0.883	EPA TO-15	01/28/2025 12:06	01/28/2025 15:10	YR
							Certifications:	NELAC-NY12058,NJDEP-NY037		
541-73-1	1,3-Dichlorobenzene	ND		ug/m³	0.531	0.883	EPA TO-15	01/28/2025 12:06	01/28/2025 15:10	YR
							Certifications:	NELAC-NY12058,NJDEP-NY037		
142-28-9	* 1,3-Dichloropropane	ND		ug/m³	0.408	0.883	EPA TO-15	01/28/2025 12:06	01/28/2025 15:10	YR
							Certifications:			
106-46-7	1,4-Dichlorobenzene	ND		ug/m³	0.531	0.883	EPA TO-15	01/28/2025 12:06	01/28/2025 15:10	YR
							Certifications:	NELAC-NY12058,NJDEP-NY037		
123-91-1	1,4-Dioxane	ND		ug/m³	0.636	0.883	EPA TO-15	01/28/2025 12:06	01/28/2025 15:10	YR
							Certifications:	NELAC-NY12058,NJDEP-NY037		
540-84-1	*** 2,2,4-Trimethylpentane**	**0.413**		ug/m³	0.206	0.883	EPA TO-15	01/28/2025 12:06	01/28/2025 15:10	YR
							Certifications:			
78-93-3	**2-Butanone**	**1.15**		ug/m³	0.260	0.883	EPA TO-15	01/28/2025 12:06	01/28/2025 15:10	YR
							Certifications:	NELAC-NY12058,NJDEP-NY037		

Sample Information

Client Sample ID: IA01_012825 **York Sample ID:** 25A1549-01

York Project (SDG) No.	Client Project ID	Matrix	Collection Date/Time	Date Received
25A1549	170361307	Indoor Ambient Air	January 28, 2025 8:51 am	01/28/2025

VOA, TO15 MASTER **Log-in Notes:** **Sample Notes:**

Sample Prepared by Method: EPA TO15 PREP

CAS No.	Parameter	Result	Flag	Units	Reported to LOQ	Dilution	Reference Method	Date/Time Prepared	Date/Time Analyzed	Analyst
591-78-6	* 2-Hexanone	ND		ug/m³	0.723	0.883	EPA TO-15	01/28/2025 12:06	01/28/2025 15:10	YR
							Certifications:			
107-05-1	3-Chloropropene	ND		ug/m³	1.38	0.883	EPA TO-15	01/28/2025 12:06	01/28/2025 15:10	YR
							Certifications:	NELAC-NY12058,NJDEP-NY037		
108-10-1	4-Methyl-2-pentanone	ND		ug/m³	0.362	0.883	EPA TO-15	01/28/2025 12:06	01/28/2025 15:10	YR
							Certifications:	NELAC-NY12058,NJDEP-NY037		
67-64-1	**Acetone**	**4.24**		ug/m³	1.68	0.883	EPA TO-15	01/28/2025 12:06	01/28/2025 15:10	YR
							Certifications:	NELAC-NY12058,NJDEP-NY037		
107-13-1	Acrylonitrile	ND		ug/m³	2.49	0.883	EPA TO-15	01/28/2025 12:06	01/28/2025 15:10	YR
							Certifications:	NELAC-NY12058,NJDEP-NY037		
71-43-2	**Benzene**	**0.621**		ug/m³	0.282	0.883	EPA TO-15	01/28/2025 12:06	01/28/2025 15:10	YR
							Certifications:	NELAC-NY12058,NJDEP-NY037		
100-44-7	Benzyl chloride	ND		ug/m³	0.457	0.883	EPA TO-15	01/28/2025 12:06	01/28/2025 15:10	YR
							Certifications:	NELAC-NY12058,NJDEP-NY037		
75-27-4	Bromodichloromethane	ND		ug/m³	0.592	0.883	EPA TO-15	01/28/2025 12:06	01/28/2025 15:10	YR
							Certifications:	NELAC-NY12058,NJDEP-NY037		
75-25-2	Bromoform	ND		ug/m³	0.913	0.883	EPA TO-15	01/28/2025 12:06	01/28/2025 15:10	YR
							Certifications:	NELAC-NY12058,NJDEP-NY037		
74-83-9	Bromomethane	ND		ug/m³	0.343	0.883	EPA TO-15	01/28/2025 12:06	01/28/2025 15:10	YR
							Certifications:	NELAC-NY12058,NJDEP-NY037		
75-15-0	Carbon disulfide	ND		ug/m³	0.275	0.883	EPA TO-15	01/28/2025 12:06	01/28/2025 15:10	YR
							Certifications:	NELAC-NY12058,NJDEP-NY037		
56-23-5	**Carbon tetrachloride**	**0.333**		ug/m³	0.139	0.883	EPA TO-15	01/28/2025 12:06	01/28/2025 15:10	YR
							Certifications:	NELAC-NY12058,NJDEP-NY037		
108-90-7	Chlorobenzene	ND		ug/m³	0.407	0.883	EPA TO-15	01/28/2025 12:06	01/28/2025 15:10	YR
							Certifications:	NELAC-NY12058,NJDEP-NY037		
75-00-3	Chloroethane	ND		ug/m³	0.233	0.883	EPA TO-15	01/28/2025 12:06	01/28/2025 15:10	YR
							Certifications:	NELAC-NY12058,NJDEP-NY037		
67-66-3	Chloroform	ND		ug/m³	0.431	0.883	EPA TO-15	01/28/2025 12:06	01/28/2025 15:10	YR
							Certifications:	NELAC-NY12058,NJDEP-NY037		
74-87-3	**Chloromethane**	**1.29**		ug/m³	0.182	0.883	EPA TO-15	01/28/2025 12:06	01/28/2025 15:10	YR
							Certifications:	NELAC-NY12058,NJDEP-NY037		
156-59-2	cis-1,2-Dichloroethylene	ND		ug/m³	0.175	0.883	EPA TO-15	01/28/2025 12:06	01/28/2025 15:10	YR
							Certifications:	NELAC-NY12058,NJDEP-NY037		
10061-01-5	cis-1,3-Dichloropropylene	ND		ug/m³	0.401	0.883	EPA TO-15	01/28/2025 12:06	01/28/2025 15:10	YR
							Certifications:	NELAC-NY12058,NJDEP-NY037		
110-82-7	Cyclohexane	ND		ug/m³	0.304	0.883	EPA TO-15	01/28/2025 12:06	01/28/2025 15:10	YR
							Certifications:	NELAC-NY12058,NJDEP-NY037		
124-48-1	Dibromochloromethane	ND		ug/m³	0.752	0.883	EPA TO-15	01/28/2025 12:06	01/28/2025 15:10	YR
							Certifications:	NELAC-NY12058,NJDEP-NY037		
75-71-8	**Dichlorodifluoromethane**	**2.18**		ug/m³	0.437	0.883	EPA TO-15	01/28/2025 12:06	01/28/2025 15:10	YR
							Certifications:	NELAC-NY12058,NJDEP-NY037		
141-78-6	*** Ethyl acetate**	**2.80**		ug/m³	0.636	0.883	EPA TO-15	01/28/2025 12:06	01/28/2025 15:10	YR
							Certifications:			

Sample Information

Client Sample ID: IA01_012825 **York Sample ID:** 25A1549-01

York Project (SDG) No.	Client Project ID	Matrix	Collection Date/Time	Date Received
25A1549	170361307	Indoor Ambient Air	January 28, 2025 8:51 am	01/28/2025

VOA, TO15 MASTER **Log-in Notes:** **Sample Notes:**

Sample Prepared by Method: EPA TO15 PREP

CAS No.	Parameter	Result	Flag	Units	Reported to LOQ	Dilution	Reference Method	Date/Time Prepared	Date/Time Analyzed	Analyst
100-41-4	**Ethyl Benzene**	**0.383**		ug/m³	0.383	0.883	EPA TO-15	01/28/2025 12:06	01/28/2025 15:10	YR
							Certifications: NELAC-NY12058,NJDEP-NY037			
87-68-3	Hexachlorobutadiene	ND		ug/m³	0.942	0.883	EPA TO-15	01/28/2025 12:06	01/28/2025 15:10	YR
							Certifications: NELAC-NY12058,NJDEP-NY037			
67-63-0	**Isopropanol**	**1.37**		ug/m³	1.30	0.883	EPA TO-15	01/28/2025 12:06	01/28/2025 15:10	YR
							Certifications: NELAC-NY12058,NJDEP-NY037			
80-62-6	**Methyl Methacrylate**	**0.723**		ug/m³	0.362	0.883	EPA TO-15	01/28/2025 12:06	01/28/2025 15:10	YR
							Certifications: NELAC-NY12058,NJDEP-NY037			
1634-04-4	Methyl tert-butyl ether (MTBE)	ND		ug/m³	0.318	0.883	EPA TO-15	01/28/2025 12:06	01/28/2025 15:10	YR
							Certifications: NELAC-NY12058,NJDEP-NY037			
75-09-2	Methylene chloride	ND		ug/m³	1.84	0.883	EPA TO-15	01/28/2025 12:06	01/28/2025 15:10	YR
							Certifications: NELAC-NY12058,NJDEP-NY037			
91-20-3	*** Naphthalene**	**2.04**		ug/m³	0.926	0.883	EPA TO-15	01/28/2025 12:06	01/28/2025 15:10	YR
							Certifications: NJDEP-NY037			
142-82-5	n-Heptane	ND		ug/m³	0.362	0.883	EPA TO-15	01/28/2025 12:06	01/28/2025 15:10	YR
							Certifications: NELAC-NY12058,NJDEP-NY037			
110-54-3	**n-Hexane**	**0.591**		ug/m³	0.311	0.883	EPA TO-15	01/28/2025 12:06	01/28/2025 15:10	YR
							Certifications: NELAC-NY12058,NJDEP-NY037			
95-47-6	o-Xylene	ND		ug/m³	0.383	0.883	EPA TO-15	01/28/2025 12:06	01/28/2025 15:10	YR
							Certifications: NELAC-NY12058,NJDEP-NY037			
179601-23-1	**p- & m- Xylenes**	**0.997**		ug/m³	0.767	0.883	EPA TO-15	01/28/2025 12:06	01/28/2025 15:10	YR
							Certifications: NELAC-NY12058,NJDEP-NY037			
622-96-8	* p-Ethyltoluene	ND		ug/m³	0.434	0.883	EPA TO-15	01/28/2025 12:06	01/28/2025 15:10	YR
							Certifications:			
115-07-1	*** Propylene**	**1.03**		ug/m³	0.152	0.883	EPA TO-15	01/28/2025 12:06	01/28/2025 15:10	YR
							Certifications:			
100-42-5	Styrene	ND		ug/m³	0.376	0.883	EPA TO-15	01/28/2025 12:06	01/28/2025 15:10	YR
							Certifications: NELAC-NY12058,NJDEP-NY037			
127-18-4	Tetrachloroethylene	ND		ug/m³	0.599	0.883	EPA TO-15	01/28/2025 12:06	01/28/2025 15:10	YR
							Certifications: NELAC-NY12058,NJDEP-NY037			
109-99-9	* Tetrahydrofuran	ND		ug/m³	0.521	0.883	EPA TO-15	01/28/2025 12:06	01/28/2025 15:10	YR
							Certifications:			
108-88-3	**Toluene**	**2.46**		ug/m³	0.333	0.883	EPA TO-15	01/28/2025 12:06	01/28/2025 15:10	YR
							Certifications: NELAC-NY12058,NJDEP-NY037			
156-60-5	trans-1,2-Dichloroethylene	ND		ug/m³	0.350	0.883	EPA TO-15	01/28/2025 12:06	01/28/2025 15:10	YR
							Certifications: NELAC-NY12058,NJDEP-NY037			
10061-02-6	trans-1,3-Dichloropropylene	ND		ug/m³	0.401	0.883	EPA TO-15	01/28/2025 12:06	01/28/2025 15:10	YR
							Certifications: NELAC-NY12058,NJDEP-NY037			
79-01-6	Trichloroethylene	ND		ug/m³	0.119	0.883	EPA TO-15	01/28/2025 12:06	01/28/2025 15:10	YR
							Certifications: NELAC-NY12058,NJDEP-NY037			
75-69-4	**Trichlorofluoromethane (Freon 11)**	**1.14**		ug/m³	0.496	0.883	EPA TO-15	01/28/2025 12:06	01/28/2025 15:10	YR
							Certifications: NELAC-NY12058,NJDEP-NY037			

Sample Information

Client Sample ID: IA01_012825 **York Sample ID:** 25A1549-01

York Project (SDG) No.	Client Project ID	Matrix	Collection Date/Time	Date Received
25A1549	170361307	Indoor Ambient Air	January 28, 2025 8:51 am	01/28/2025

VOA, TO15 MASTER **Log-in Notes:** **Sample Notes:**

Sample Prepared by Method: EPA TO15 PREP

CAS No.	Parameter	Result	Flag	Units	Reported to LOQ	Dilution	Reference Method	Date/Time Prepared	Date/Time Analyzed	Analyst
108-05-4	Vinyl acetate	ND	TO-LCS-L, ICVE	ug/m³	0.311	0.883	EPA TO-15	01/28/2025 12:06	01/28/2025 15:10	YR
							Certifications:	NELAC-NY12058,NJDEP-NY037		
593-60-2	Vinyl bromide	ND		ug/m³	0.386	0.883	EPA TO-15	01/28/2025 12:06	01/28/2025 15:10	YR
							Certifications:	NELAC-NY12058,NJDEP-NY037		
75-01-4	Vinyl Chloride	ND		ug/m³	0.113	0.883	EPA TO-15	01/28/2025 12:06	01/28/2025 15:10	YR
							Certifications:	NELAC-NY12058,NJDEP-NY037		

Sample Information

Client Sample ID: IA02_012825 **York Sample ID:** 25A1549-02

York Project (SDG) No.	Client Project ID	Matrix	Collection Date/Time	Date Received
25A1549	170361307	Indoor Ambient Air	January 28, 2025 8:52 am	01/28/2025

VOA, TO15 MASTER **Log-in Notes:** **Sample Notes:**

Sample Prepared by Method: EPA TO15 PREP

CAS No.	Parameter	Result	Flag	Units	Reported to LOQ	Dilution	Reference Method	Date/Time Prepared	Date/Time Analyzed	Analyst
630-20-6	* 1,1,1,2-Tetrachloroethane	ND		ug/m³	0.605	0.882	EPA TO-15	01/28/2025 12:06	01/28/2025 16:15	YR
							Certifications:			
71-55-6	1,1,1-Trichloroethane	ND		ug/m³	0.481	0.882	EPA TO-15	01/28/2025 12:06	01/28/2025 16:15	YR
							Certifications:	NELAC-NY12058,NJDEP-NY037		
79-34-5	1,1,2,2-Tetrachloroethane	ND		ug/m³	0.605	0.882	EPA TO-15	01/28/2025 12:06	01/28/2025 16:15	YR
							Certifications:	NELAC-NY12058,NJDEP-NY037		
76-13-1	1,1,2-Trichloro-1,2,2-trifluoroethane (Freon 113)	ND		ug/m³	0.676	0.882	EPA TO-15	01/28/2025 12:06	01/28/2025 16:15	YR
							Certifications:	NELAC-NY12058,NJDEP-NY037		
79-00-5	1,1,2-Trichloroethane	ND		ug/m³	0.481	0.882	EPA TO-15	01/28/2025 12:06	01/28/2025 16:15	YR
							Certifications:	NELAC-NY12058,NJDEP-NY037		
75-34-3	1,1-Dichloroethane	ND		ug/m³	0.357	0.882	EPA TO-15	01/28/2025 12:06	01/28/2025 16:15	YR
							Certifications:	NELAC-NY12058,NJDEP-NY037		
75-35-4	1,1-Dichloroethylene	ND		ug/m³	0.175	0.882	EPA TO-15	01/28/2025 12:06	01/28/2025 16:15	YR
							Certifications:	NELAC-NY12058,NJDEP-NY037		
120-82-1	1,2,4-Trichlorobenzene	ND		ug/m³	0.655	0.882	EPA TO-15	01/28/2025 12:06	01/28/2025 16:15	YR
							Certifications:	NELAC-NY12058,NJDEP-NY037		
95-63-6	1,2,4-Trimethylbenzene	ND		ug/m³	0.434	0.882	EPA TO-15	01/28/2025 12:06	01/28/2025 16:15	YR
							Certifications:	NELAC-NY12058,NJDEP-NY037		
106-93-4	1,2-Dibromoethane	ND		ug/m³	0.678	0.882	EPA TO-15	01/28/2025 12:06	01/28/2025 16:15	YR
							Certifications:	NELAC-NY12058,NJDEP-NY037		
95-50-1	1,2-Dichlorobenzene	ND		ug/m³	0.530	0.882	EPA TO-15	01/28/2025 12:06	01/28/2025 16:15	YR
							Certifications:	NELAC-NY12058,NJDEP-NY037		
107-06-2	1,2-Dichloroethane	ND		ug/m³	0.357	0.882	EPA TO-15	01/28/2025 12:06	01/28/2025 16:15	YR
							Certifications:	NELAC-NY12058,NJDEP-NY037		
78-87-5	1,2-Dichloropropane	ND		ug/m³	0.408	0.882	EPA TO-15	01/28/2025 12:06	01/28/2025 16:15	YR
							Certifications:	NELAC-NY12058,NJDEP-NY037		
76-14-2	1,2-Dichlorotetrafluoroethane	ND		ug/m³	0.617	0.882	EPA TO-15	01/28/2025 12:06	01/28/2025 16:15	YR
							Certifications:	NELAC-NY12058,NJDEP-NY037		
108-67-8	1,3,5-Trimethylbenzene	ND		ug/m³	0.434	0.882	EPA TO-15	01/28/2025 12:06	01/28/2025 16:15	YR
							Certifications:	NELAC-NY12058,NJDEP-NY037		
106-99-0	1,3-Butadiene	ND		ug/m³	0.585	0.882	EPA TO-15	01/28/2025 12:06	01/28/2025 16:15	YR
							Certifications:	NELAC-NY12058,NJDEP-NY037		
541-73-1	1,3-Dichlorobenzene	ND		ug/m³	0.530	0.882	EPA TO-15	01/28/2025 12:06	01/28/2025 16:15	YR
							Certifications:	NELAC-NY12058,NJDEP-NY037		
142-28-9	* 1,3-Dichloropropane	ND		ug/m³	0.408	0.882	EPA TO-15	01/28/2025 12:06	01/28/2025 16:15	YR
							Certifications:			
106-46-7	1,4-Dichlorobenzene	ND		ug/m³	0.530	0.882	EPA TO-15	01/28/2025 12:06	01/28/2025 16:15	YR
							Certifications:	NELAC-NY12058,NJDEP-NY037		
123-91-1	1,4-Dioxane	ND		ug/m³	0.636	0.882	EPA TO-15	01/28/2025 12:06	01/28/2025 16:15	YR
							Certifications:	NELAC-NY12058,NJDEP-NY037		
540-84-1	*** 2,2,4-Trimethylpentane**	**0.288**		ug/m³	0.206	0.882	EPA TO-15	01/28/2025 12:06	01/28/2025 16:15	YR
							Certifications:			
78-93-3	**2-Butanone**	**0.546**		ug/m³	0.260	0.882	EPA TO-15	01/28/2025 12:06	01/28/2025 16:15	YR
							Certifications:	NELAC-NY12058,NJDEP-NY037		

Sample Information

Client Sample ID: IA02_012825 **York Sample ID:** 25A1549-02

York Project (SDG) No.	Client Project ID	Matrix	Collection Date/Time	Date Received
25A1549	170361307	Indoor Ambient Air	January 28, 2025 8:52 am	01/28/2025

VOA, TO15 MASTER

Log-in Notes:

Sample Notes:

Sample Prepared by Method: EPA TO15 PREP

CAS No.	Parameter	Result	Flag	Units	Reported to LOQ	Dilution	Reference Method	Date/Time Prepared	Date/Time Analyzed	Analyst
591-78-6	* 2-Hexanone	ND		ug/m³	0.723	0.882	EPA TO-15	01/28/2025 12:06	01/28/2025 16:15	YR
							Certifications:			
107-05-1	3-Chloropropene	ND		ug/m³	1.38	0.882	EPA TO-15	01/28/2025 12:06	01/28/2025 16:15	YR
							Certifications: NELAC-NY12058,NJDEP-NY037			
108-10-1	4-Methyl-2-pentanone	ND		ug/m³	0.361	0.882	EPA TO-15	01/28/2025 12:06	01/28/2025 16:15	YR
							Certifications: NELAC-NY12058,NJDEP-NY037			
67-64-1	**Acetone**	**3.23**		ug/m³	1.68	0.882	EPA TO-15	01/28/2025 12:06	01/28/2025 16:15	YR
							Certifications: NELAC-NY12058,NJDEP-NY037			
107-13-1	**Acrylonitrile**	**6.51**		ug/m³	2.49	0.882	EPA TO-15	01/28/2025 12:06	01/28/2025 16:15	YR
							Certifications: NELAC-NY12058,NJDEP-NY037			
71-43-2	**Benzene**	**0.423**		ug/m³	0.282	0.882	EPA TO-15	01/28/2025 12:06	01/28/2025 16:15	YR
							Certifications: NELAC-NY12058,NJDEP-NY037			
100-44-7	Benzyl chloride	ND		ug/m³	0.457	0.882	EPA TO-15	01/28/2025 12:06	01/28/2025 16:15	YR
							Certifications: NELAC-NY12058,NJDEP-NY037			
75-27-4	Bromodichloromethane	ND		ug/m³	0.591	0.882	EPA TO-15	01/28/2025 12:06	01/28/2025 16:15	YR
							Certifications: NELAC-NY12058,NJDEP-NY037			
75-25-2	Bromoform	ND		ug/m³	0.912	0.882	EPA TO-15	01/28/2025 12:06	01/28/2025 16:15	YR
							Certifications: NELAC-NY12058,NJDEP-NY037			
74-83-9	Bromomethane	ND		ug/m³	0.342	0.882	EPA TO-15	01/28/2025 12:06	01/28/2025 16:15	YR
							Certifications: NELAC-NY12058,NJDEP-NY037			
75-15-0	Carbon disulfide	ND		ug/m³	0.275	0.882	EPA TO-15	01/28/2025 12:06	01/28/2025 16:15	YR
							Certifications: NELAC-NY12058,NJDEP-NY037			
56-23-5	**Carbon tetrachloride**	**0.222**		ug/m³	0.139	0.882	EPA TO-15	01/28/2025 12:06	01/28/2025 16:15	YR
							Certifications: NELAC-NY12058,NJDEP-NY037			
108-90-7	Chlorobenzene	ND		ug/m³	0.406	0.882	EPA TO-15	01/28/2025 12:06	01/28/2025 16:15	YR
							Certifications: NELAC-NY12058,NJDEP-NY037			
75-00-3	Chloroethane	ND		ug/m³	0.233	0.882	EPA TO-15	01/28/2025 12:06	01/28/2025 16:15	YR
							Certifications: NELAC-NY12058,NJDEP-NY037			
67-66-3	Chloroform	ND		ug/m³	0.431	0.882	EPA TO-15	01/28/2025 12:06	01/28/2025 16:15	YR
							Certifications: NELAC-NY12058,NJDEP-NY037			
74-87-3	**Chloromethane**	**1.24**		ug/m³	0.182	0.882	EPA TO-15	01/28/2025 12:06	01/28/2025 16:15	YR
							Certifications: NELAC-NY12058,NJDEP-NY037			
156-59-2	cis-1,2-Dichloroethylene	ND		ug/m³	0.175	0.882	EPA TO-15	01/28/2025 12:06	01/28/2025 16:15	YR
							Certifications: NELAC-NY12058,NJDEP-NY037			
10061-01-5	cis-1,3-Dichloropropylene	ND		ug/m³	0.400	0.882	EPA TO-15	01/28/2025 12:06	01/28/2025 16:15	YR
							Certifications: NELAC-NY12058,NJDEP-NY037			
110-82-7	Cyclohexane	ND		ug/m³	0.304	0.882	EPA TO-15	01/28/2025 12:06	01/28/2025 16:15	YR
							Certifications: NELAC-NY12058,NJDEP-NY037			
124-48-1	Dibromochloromethane	ND		ug/m³	0.751	0.882	EPA TO-15	01/28/2025 12:06	01/28/2025 16:15	YR
							Certifications: NELAC-NY12058,NJDEP-NY037			
75-71-8	**Dichlorodifluoromethane**	**2.14**		ug/m³	0.436	0.882	EPA TO-15	01/28/2025 12:06	01/28/2025 16:15	YR
							Certifications: NELAC-NY12058,NJDEP-NY037			
141-78-6	*** Ethyl acetate**	**1.94**		ug/m³	0.636	0.882	EPA TO-15	01/28/2025 12:06	01/28/2025 16:15	YR
							Certifications:			

Sample Information

Client Sample ID: IA02_012825 **York Sample ID:** 25A1549-02

York Project (SDG) No.	Client Project ID	Matrix	Collection Date/Time	Date Received
25A1549	170361307	Indoor Ambient Air	January 28, 2025 8:52 am	01/28/2025

VOA, TO15 MASTER **Log-in Notes:** **Sample Notes:**

Sample Prepared by Method: EPA TO15 PREP

CAS No.	Parameter	Result	Flag	Units	Reported to LOQ	Dilution	Reference Method	Date/Time Prepared	Date/Time Analyzed	Analyst
100-41-4	Ethyl Benzene	ND		ug/m³	0.383	0.882	EPA TO-15	01/28/2025 12:06	01/28/2025 16:15	YR
							Certifications:	NELAC-NY12058,NJDEP-NY037		
87-68-3	Hexachlorobutadiene	ND		ug/m³	0.941	0.882	EPA TO-15	01/28/2025 12:06	01/28/2025 16:15	YR
							Certifications:	NELAC-NY12058,NJDEP-NY037		
67-63-0	Isopropanol	ND		ug/m³	1.30	0.882	EPA TO-15	01/28/2025 12:06	01/28/2025 16:15	YR
							Certifications:	NELAC-NY12058,NJDEP-NY037		
80-62-6	**Methyl Methacrylate**	**0.469**		ug/m³	0.361	0.882	EPA TO-15	01/28/2025 12:06	01/28/2025 16:15	YR
							Certifications:	NELAC-NY12058,NJDEP-NY037		
1634-04-4	Methyl tert-butyl ether (MTBE)	ND		ug/m³	0.318	0.882	EPA TO-15	01/28/2025 12:06	01/28/2025 16:15	YR
							Certifications:	NELAC-NY12058,NJDEP-NY037		
75-09-2	Methylene chloride	ND		ug/m³	1.84	0.882	EPA TO-15	01/28/2025 12:06	01/28/2025 16:15	YR
							Certifications:	NELAC-NY12058,NJDEP-NY037		
91-20-3	* Naphthalene	ND		ug/m³	0.925	0.882	EPA TO-15	01/28/2025 12:06	01/28/2025 16:15	YR
							Certifications:	NJDEP-NY037		
142-82-5	n-Heptane	ND		ug/m³	0.361	0.882	EPA TO-15	01/28/2025 12:06	01/28/2025 16:15	YR
							Certifications:	NELAC-NY12058,NJDEP-NY037		
110-54-3	**n-Hexane**	**0.373**		ug/m³	0.311	0.882	EPA TO-15	01/28/2025 12:06	01/28/2025 16:15	YR
							Certifications:	NELAC-NY12058,NJDEP-NY037		
95-47-6	o-Xylene	ND		ug/m³	0.383	0.882	EPA TO-15	01/28/2025 12:06	01/28/2025 16:15	YR
							Certifications:	NELAC-NY12058,NJDEP-NY037		
179601-23-1	p- & m- Xylenes	ND		ug/m³	0.766	0.882	EPA TO-15	01/28/2025 12:06	01/28/2025 16:15	YR
							Certifications:	NELAC-NY12058,NJDEP-NY037		
622-96-8	* p-Ethyltoluene	ND		ug/m³	0.434	0.882	EPA TO-15	01/28/2025 12:06	01/28/2025 16:15	YR
							Certifications:			
115-07-1	*** Propylene**	**1.02**		ug/m³	0.152	0.882	EPA TO-15	01/28/2025 12:06	01/28/2025 16:15	YR
							Certifications:			
100-42-5	Styrene	ND		ug/m³	0.376	0.882	EPA TO-15	01/28/2025 12:06	01/28/2025 16:15	YR
							Certifications:	NELAC-NY12058,NJDEP-NY037		
127-18-4	Tetrachloroethylene	ND		ug/m³	0.598	0.882	EPA TO-15	01/28/2025 12:06	01/28/2025 16:15	YR
							Certifications:	NELAC-NY12058,NJDEP-NY037		
109-99-9	* Tetrahydrofuran	ND		ug/m³	0.520	0.882	EPA TO-15	01/28/2025 12:06	01/28/2025 16:15	YR
							Certifications:			
108-88-3	**Toluene**	**1.96**		ug/m³	0.332	0.882	EPA TO-15	01/28/2025 12:06	01/28/2025 16:15	YR
							Certifications:	NELAC-NY12058,NJDEP-NY037		
156-60-5	trans-1,2-Dichloroethylene	ND		ug/m³	0.350	0.882	EPA TO-15	01/28/2025 12:06	01/28/2025 16:15	YR
							Certifications:	NELAC-NY12058,NJDEP-NY037		
10061-02-6	trans-1,3-Dichloropropylene	ND		ug/m³	0.400	0.882	EPA TO-15	01/28/2025 12:06	01/28/2025 16:15	YR
							Certifications:	NELAC-NY12058,NJDEP-NY037		
79-01-6	**Trichloroethylene**	**0.474**		ug/m³	0.118	0.882	EPA TO-15	01/28/2025 12:06	01/28/2025 16:15	YR
							Certifications:	NELAC-NY12058,NJDEP-NY037		
75-69-4	**Trichlorofluoromethane (Freon 11)**	**0.942**		ug/m³	0.496	0.882	EPA TO-15	01/28/2025 12:06	01/28/2025 16:15	YR
							Certifications:	NELAC-NY12058,NJDEP-NY037		

Sample Information

Client Sample ID: IA02_012825 **York Sample ID:** 25A1549-02

York Project (SDG) No.	Client Project ID	Matrix	Collection Date/Time	Date Received
25A1549	170361307	Indoor Ambient Air	January 28, 2025 8:52 am	01/28/2025

VOA, TO15 MASTER

Log-in Notes:

Sample Notes:

Sample Prepared by Method: EPA TO15 PREP

CAS No.	Parameter	Result	Flag	Units	Reported to LOQ	Dilution	Reference Method	Date/Time Prepared	Date/Time Analyzed	Analyst
108-05-4	Vinyl acetate	ND	ICVE, TO-LCS-L	ug/m³	0.311	0.882	EPA TO-15	01/28/2025 12:06	01/28/2025 16:15	YR
							Certifications:	NELAC-NY12058,NJDEP-NY037		
593-60-2	Vinyl bromide	ND		ug/m³	0.386	0.882	EPA TO-15	01/28/2025 12:06	01/28/2025 16:15	YR
							Certifications:	NELAC-NY12058,NJDEP-NY037		
75-01-4	Vinyl Chloride	ND		ug/m³	0.113	0.882	EPA TO-15	01/28/2025 12:06	01/28/2025 16:15	YR
							Certifications:	NELAC-NY12058,NJDEP-NY037		

Sample Information

Client Sample ID: IA03_012825 **York Sample ID:** 25A1549-03

York Project (SDG) No.	Client Project ID	Matrix	Collection Date/Time	Date Received
25A1549	170361307	Indoor Ambient Air	January 28, 2025 7:44 am	01/28/2025

VOA, TO15 MASTER **Log-in Notes:** **Sample Notes:**

Sample Prepared by Method: EPA TO15 PREP

CAS No.	Parameter	Result	Flag	Units	Reported to LOQ	Dilution	Reference Method	Date/Time Prepared	Date/Time Analyzed	Analyst
630-20-6	* 1,1,1,2-Tetrachloroethane	ND		ug/m³	0.588	0.856	EPA TO-15	01/28/2025 12:06	01/28/2025 17:20	YR
							Certifications:			
71-55-6	1,1,1-Trichloroethane	ND		ug/m³	0.467	0.856	EPA TO-15	01/28/2025 12:06	01/28/2025 17:20	YR
							Certifications:	NELAC-NY12058,NJDEP-NY037		
79-34-5	1,1,2,2-Tetrachloroethane	ND		ug/m³	0.588	0.856	EPA TO-15	01/28/2025 12:06	01/28/2025 17:20	YR
							Certifications:	NELAC-NY12058,NJDEP-NY037		
76-13-1	1,1,2-Trichloro-1,2,2-trifluoroethane (Freon 113)	ND		ug/m³	0.656	0.856	EPA TO-15	01/28/2025 12:06	01/28/2025 17:20	YR
							Certifications:	NELAC-NY12058,NJDEP-NY037		
79-00-5	1,1,2-Trichloroethane	ND		ug/m³	0.467	0.856	EPA TO-15	01/28/2025 12:06	01/28/2025 17:20	YR
							Certifications:	NELAC-NY12058,NJDEP-NY037		
75-34-3	1,1-Dichloroethane	ND		ug/m³	0.346	0.856	EPA TO-15	01/28/2025 12:06	01/28/2025 17:20	YR
							Certifications:	NELAC-NY12058,NJDEP-NY037		
75-35-4	1,1-Dichloroethylene	ND		ug/m³	0.170	0.856	EPA TO-15	01/28/2025 12:06	01/28/2025 17:20	YR
							Certifications:	NELAC-NY12058,NJDEP-NY037		
120-82-1	1,2,4-Trichlorobenzene	ND		ug/m³	0.635	0.856	EPA TO-15	01/28/2025 12:06	01/28/2025 17:20	YR
							Certifications:	NELAC-NY12058,NJDEP-NY037		
95-63-6	1,2,4-Trimethylbenzene	ND		ug/m³	0.421	0.856	EPA TO-15	01/28/2025 12:06	01/28/2025 17:20	YR
							Certifications:	NELAC-NY12058,NJDEP-NY037		
106-93-4	1,2-Dibromoethane	ND		ug/m³	0.658	0.856	EPA TO-15	01/28/2025 12:06	01/28/2025 17:20	YR
							Certifications:	NELAC-NY12058,NJDEP-NY037		
95-50-1	1,2-Dichlorobenzene	ND		ug/m³	0.515	0.856	EPA TO-15	01/28/2025 12:06	01/28/2025 17:20	YR
							Certifications:	NELAC-NY12058,NJDEP-NY037		
107-06-2	1,2-Dichloroethane	ND		ug/m³	0.346	0.856	EPA TO-15	01/28/2025 12:06	01/28/2025 17:20	YR
							Certifications:	NELAC-NY12058,NJDEP-NY037		
78-87-5	1,2-Dichloropropane	ND		ug/m³	0.396	0.856	EPA TO-15	01/28/2025 12:06	01/28/2025 17:20	YR
							Certifications:	NELAC-NY12058,NJDEP-NY037		
76-14-2	1,2-Dichlorotetrafluoroethane	ND		ug/m³	0.598	0.856	EPA TO-15	01/28/2025 12:06	01/28/2025 17:20	YR
							Certifications:	NELAC-NY12058,NJDEP-NY037		
108-67-8	1,3,5-Trimethylbenzene	ND		ug/m³	0.421	0.856	EPA TO-15	01/28/2025 12:06	01/28/2025 17:20	YR
							Certifications:	NELAC-NY12058,NJDEP-NY037		
106-99-0	1,3-Butadiene	ND		ug/m³	0.568	0.856	EPA TO-15	01/28/2025 12:06	01/28/2025 17:20	YR
							Certifications:	NELAC-NY12058,NJDEP-NY037		
541-73-1	1,3-Dichlorobenzene	ND		ug/m³	0.515	0.856	EPA TO-15	01/28/2025 12:06	01/28/2025 17:20	YR
							Certifications:	NELAC-NY12058,NJDEP-NY037		
142-28-9	* 1,3-Dichloropropane	ND		ug/m³	0.396	0.856	EPA TO-15	01/28/2025 12:06	01/28/2025 17:20	YR
							Certifications:			
106-46-7	1,4-Dichlorobenzene	ND		ug/m³	0.515	0.856	EPA TO-15	01/28/2025 12:06	01/28/2025 17:20	YR
							Certifications:	NELAC-NY12058,NJDEP-NY037		
123-91-1	1,4-Dioxane	ND		ug/m³	0.617	0.856	EPA TO-15	01/28/2025 12:06	01/28/2025 17:20	YR
							Certifications:	NELAC-NY12058,NJDEP-NY037		
540-84-1	*** 2,2,4-Trimethylpentane**	**0.280**		ug/m³	0.200	0.856	EPA TO-15	01/28/2025 12:06	01/28/2025 17:20	YR
							Certifications:			
78-93-3	**2-Butanone**	**0.606**		ug/m³	0.252	0.856	EPA TO-15	01/28/2025 12:06	01/28/2025 17:20	YR
							Certifications:	NELAC-NY12058,NJDEP-NY037		

Sample Information

Client Sample ID: IA03_012825 **York Sample ID:** 25A1549-03

York Project (SDG) No.	Client Project ID	Matrix	Collection Date/Time	Date Received
25A1549	170361307	Indoor Ambient Air	January 28, 2025 7:44 am	01/28/2025

VOA, TO15 MASTER

Log-in Notes:

Sample Notes:

Sample Prepared by Method: EPA TO15 PREP

CAS No.	Parameter	Result	Flag	Units	Reported to LOQ	Dilution	Reference Method	Date/Time Prepared	Date/Time Analyzed	Analyst
591-78-6	* 2-Hexanone	ND		ug/m³	0.701	0.856	EPA TO-15	01/28/2025 12:06	01/28/2025 17:20	YR
							Certifications:			
107-05-1	3-Chloropropene	ND		ug/m³	1.34	0.856	EPA TO-15	01/28/2025 12:06	01/28/2025 17:20	YR
							Certifications:	NELAC-NY12058,NJDEP-NY037		
108-10-1	4-Methyl-2-pentanone	ND		ug/m³	0.351	0.856	EPA TO-15	01/28/2025 12:06	01/28/2025 17:20	YR
							Certifications:	NELAC-NY12058,NJDEP-NY037		
67-64-1	**Acetone**	**3.11**		ug/m³	1.63	0.856	EPA TO-15	01/28/2025 12:06	01/28/2025 17:20	YR
							Certifications:	NELAC-NY12058,NJDEP-NY037		
107-13-1	Acrylonitrile	ND		ug/m³	2.41	0.856	EPA TO-15	01/28/2025 12:06	01/28/2025 17:20	YR
							Certifications:	NELAC-NY12058,NJDEP-NY037		
71-43-2	**Benzene**	**0.492**		ug/m³	0.273	0.856	EPA TO-15	01/28/2025 12:06	01/28/2025 17:20	YR
							Certifications:	NELAC-NY12058,NJDEP-NY037		
100-44-7	Benzyl chloride	ND		ug/m³	0.443	0.856	EPA TO-15	01/28/2025 12:06	01/28/2025 17:20	YR
							Certifications:	NELAC-NY12058,NJDEP-NY037		
75-27-4	Bromodichloromethane	ND		ug/m³	0.573	0.856	EPA TO-15	01/28/2025 12:06	01/28/2025 17:20	YR
							Certifications:	NELAC-NY12058,NJDEP-NY037		
75-25-2	Bromoform	ND		ug/m³	0.885	0.856	EPA TO-15	01/28/2025 12:06	01/28/2025 17:20	YR
							Certifications:	NELAC-NY12058,NJDEP-NY037		
74-83-9	Bromomethane	ND		ug/m³	0.332	0.856	EPA TO-15	01/28/2025 12:06	01/28/2025 17:20	YR
							Certifications:	NELAC-NY12058,NJDEP-NY037		
75-15-0	Carbon disulfide	ND		ug/m³	0.267	0.856	EPA TO-15	01/28/2025 12:06	01/28/2025 17:20	YR
							Certifications:	NELAC-NY12058,NJDEP-NY037		
56-23-5	**Carbon tetrachloride**	**0.323**		ug/m³	0.135	0.856	EPA TO-15	01/28/2025 12:06	01/28/2025 17:20	YR
							Certifications:	NELAC-NY12058,NJDEP-NY037		
108-90-7	Chlorobenzene	ND		ug/m³	0.394	0.856	EPA TO-15	01/28/2025 12:06	01/28/2025 17:20	YR
							Certifications:	NELAC-NY12058,NJDEP-NY037		
75-00-3	Chloroethane	ND		ug/m³	0.226	0.856	EPA TO-15	01/28/2025 12:06	01/28/2025 17:20	YR
							Certifications:	NELAC-NY12058,NJDEP-NY037		
67-66-3	Chloroform	ND		ug/m³	0.418	0.856	EPA TO-15	01/28/2025 12:06	01/28/2025 17:20	YR
							Certifications:	NELAC-NY12058,NJDEP-NY037		
74-87-3	**Chloromethane**	**1.24**		ug/m³	0.177	0.856	EPA TO-15	01/28/2025 12:06	01/28/2025 17:20	YR
							Certifications:	NELAC-NY12058,NJDEP-NY037		
156-59-2	cis-1,2-Dichloroethylene	ND		ug/m³	0.170	0.856	EPA TO-15	01/28/2025 12:06	01/28/2025 17:20	YR
							Certifications:	NELAC-NY12058,NJDEP-NY037		
10061-01-5	cis-1,3-Dichloropropylene	ND		ug/m³	0.389	0.856	EPA TO-15	01/28/2025 12:06	01/28/2025 17:20	YR
							Certifications:	NELAC-NY12058,NJDEP-NY037		
110-82-7	Cyclohexane	ND		ug/m³	0.295	0.856	EPA TO-15	01/28/2025 12:06	01/28/2025 17:20	YR
							Certifications:	NELAC-NY12058,NJDEP-NY037		
124-48-1	Dibromochloromethane	ND		ug/m³	0.729	0.856	EPA TO-15	01/28/2025 12:06	01/28/2025 17:20	YR
							Certifications:	NELAC-NY12058,NJDEP-NY037		
75-71-8	**Dichlorodifluoromethane**	**2.12**		ug/m³	0.423	0.856	EPA TO-15	01/28/2025 12:06	01/28/2025 17:20	YR
							Certifications:	NELAC-NY12058,NJDEP-NY037		
141-78-6	*** Ethyl acetate**	**1.97**		ug/m³	0.617	0.856	EPA TO-15	01/28/2025 12:06	01/28/2025 17:20	YR
							Certifications:			

Sample Information

Client Sample ID: IA03_012825 **York Sample ID:** 25A1549-03

York Project (SDG) No.	Client Project ID	Matrix	Collection Date/Time	Date Received
25A1549	170361307	Indoor Ambient Air	January 28, 2025 7:44 am	01/28/2025

VOA, TO15 MASTER **Log-in Notes:** **Sample Notes:**

Sample Prepared by Method: EPA TO15 PREP

CAS No.	Parameter	Result	Flag	Units	Reported to LOQ	Dilution	Reference Method	Date/Time Prepared	Date/Time Analyzed	Analyst
100-41-4	Ethyl Benzene	ND		ug/m³	0.372	0.856	EPA TO-15	01/28/2025 12:06	01/28/2025 17:20	YR
							Certifications:	NELAC-NY12058,NJDEP-NY037		
87-68-3	Hexachlorobutadiene	ND		ug/m³	0.913	0.856	EPA TO-15	01/28/2025 12:06	01/28/2025 17:20	YR
							Certifications:	NELAC-NY12058,NJDEP-NY037		
67-63-0	Isopropanol	ND		ug/m³	1.26	0.856	EPA TO-15	01/28/2025 12:06	01/28/2025 17:20	YR
							Certifications:	NELAC-NY12058,NJDEP-NY037		
80-62-6	**Methyl Methacrylate**	**0.385**		ug/m³	0.350	0.856	EPA TO-15	01/28/2025 12:06	01/28/2025 17:20	YR
							Certifications:	NELAC-NY12058,NJDEP-NY037		
1634-04-4	Methyl tert-butyl ether (MTBE)	ND		ug/m³	0.309	0.856	EPA TO-15	01/28/2025 12:06	01/28/2025 17:20	YR
							Certifications:	NELAC-NY12058,NJDEP-NY037		
75-09-2	Methylene chloride	ND		ug/m³	1.78	0.856	EPA TO-15	01/28/2025 12:06	01/28/2025 17:20	YR
							Certifications:	NELAC-NY12058,NJDEP-NY037		
91-20-3	* Naphthalene	ND		ug/m³	0.897	0.856	EPA TO-15	01/28/2025 12:06	01/28/2025 17:20	YR
							Certifications:	NJDEP-NY037		
142-82-5	n-Heptane	ND		ug/m³	0.351	0.856	EPA TO-15	01/28/2025 12:06	01/28/2025 17:20	YR
							Certifications:	NELAC-NY12058,NJDEP-NY037		
110-54-3	**n-Hexane**	**0.513**		ug/m³	0.302	0.856	EPA TO-15	01/28/2025 12:06	01/28/2025 17:20	YR
							Certifications:	NELAC-NY12058,NJDEP-NY037		
95-47-6	o-Xylene	ND		ug/m³	0.372	0.856	EPA TO-15	01/28/2025 12:06	01/28/2025 17:20	YR
							Certifications:	NELAC-NY12058,NJDEP-NY037		
179601-23-1	p- & m- Xylenes	ND		ug/m³	0.743	0.856	EPA TO-15	01/28/2025 12:06	01/28/2025 17:20	YR
							Certifications:	NELAC-NY12058,NJDEP-NY037		
622-96-8	* p-Ethyltoluene	ND		ug/m³	0.421	0.856	EPA TO-15	01/28/2025 12:06	01/28/2025 17:20	YR
							Certifications:			
115-07-1	*** Propylene**	**0.840**		ug/m³	0.147	0.856	EPA TO-15	01/28/2025 12:06	01/28/2025 17:20	YR
							Certifications:			
100-42-5	Styrene	ND		ug/m³	0.365	0.856	EPA TO-15	01/28/2025 12:06	01/28/2025 17:20	YR
							Certifications:	NELAC-NY12058,NJDEP-NY037		
127-18-4	Tetrachloroethylene	ND		ug/m³	0.581	0.856	EPA TO-15	01/28/2025 12:06	01/28/2025 17:20	YR
							Certifications:	NELAC-NY12058,NJDEP-NY037		
109-99-9	* Tetrahydrofuran	ND		ug/m³	0.505	0.856	EPA TO-15	01/28/2025 12:06	01/28/2025 17:20	YR
							Certifications:			
108-88-3	**Toluene**	**1.81**		ug/m³	0.323	0.856	EPA TO-15	01/28/2025 12:06	01/28/2025 17:20	YR
							Certifications:	NELAC-NY12058,NJDEP-NY037		
156-60-5	trans-1,2-Dichloroethylene	ND		ug/m³	0.339	0.856	EPA TO-15	01/28/2025 12:06	01/28/2025 17:20	YR
							Certifications:	NELAC-NY12058,NJDEP-NY037		
10061-02-6	trans-1,3-Dichloropropylene	ND		ug/m³	0.389	0.856	EPA TO-15	01/28/2025 12:06	01/28/2025 17:20	YR
							Certifications:	NELAC-NY12058,NJDEP-NY037		
79-01-6	Trichloroethylene	ND		ug/m³	0.115	0.856	EPA TO-15	01/28/2025 12:06	01/28/2025 17:20	YR
							Certifications:	NELAC-NY12058,NJDEP-NY037		
75-69-4	**Trichlorofluoromethane (Freon 11)**	**1.11**		ug/m³	0.481	0.856	EPA TO-15	01/28/2025 12:06	01/28/2025 17:20	YR
							Certifications:	NELAC-NY12058,NJDEP-NY037		

Sample Information

Client Sample ID: IA03_012825 **York Sample ID:** 25A1549-03

York Project (SDG) No.	Client Project ID	Matrix	Collection Date/Time	Date Received
25A1549	170361307	Indoor Ambient Air	January 28, 2025 7:44 am	01/28/2025

VOA, TO15 MASTER **Log-in Notes:** **Sample Notes:**

Sample Prepared by Method: EPA TO15 PREP

CAS No.	Parameter	Result	Flag	Units	Reported to LOQ	Dilution	Reference Method	Date/Time Prepared	Date/Time Analyzed	Analyst
108-05-4	Vinyl acetate	ND	ICVE, TO-LCS-L	ug/m³	0.301	0.856	EPA TO-15	01/28/2025 12:06	01/28/2025 17:20	YR
							Certifications:	NELAC-NY12058,NJDEP-NY037		
593-60-2	Vinyl bromide	ND		ug/m³	0.374	0.856	EPA TO-15	01/28/2025 12:06	01/28/2025 17:20	YR
							Certifications:	NELAC-NY12058,NJDEP-NY037		
75-01-4	Vinyl Chloride	ND		ug/m³	0.109	0.856	EPA TO-15	01/28/2025 12:06	01/28/2025 17:20	YR
							Certifications:	NELAC-NY12058,NJDEP-NY037		

Sample Information

Client Sample ID: IA04_012825 **York Sample ID:** 25A1549-04

York Project (SDG) No.	Client Project ID	Matrix	Collection Date/Time	Date Received
25A1549	170361307	Indoor Ambient Air	January 28, 2025 7:45 am	01/28/2025

VOA, TO15 MASTER **Log-in Notes:** **Sample Notes:**

Sample Prepared by Method: EPA TO15 PREP

CAS No.	Parameter	Result	Flag	Units	Reported to LOQ	Dilution	Reference Method	Date/Time Prepared	Date/Time Analyzed	Analyst
630-20-6	* 1,1,1,2-Tetrachloroethane	ND		ug/m³	0.595	0.867	EPA TO-15	01/28/2025 12:06	01/28/2025 18:25	YR
							Certifications:			
71-55-6	1,1,1-Trichloroethane	ND		ug/m³	0.473	0.867	EPA TO-15	01/28/2025 12:06	01/28/2025 18:25	YR
							Certifications:	NELAC-NY12058,NJDEP-NY037		
79-34-5	1,1,2,2-Tetrachloroethane	ND		ug/m³	0.595	0.867	EPA TO-15	01/28/2025 12:06	01/28/2025 18:25	YR
							Certifications:	NELAC-NY12058,NJDEP-NY037		
76-13-1	1,1,2-Trichloro-1,2,2-trifluoroethane (Freon 113)	ND		ug/m³	0.664	0.867	EPA TO-15	01/28/2025 12:06	01/28/2025 18:25	YR
							Certifications:	NELAC-NY12058,NJDEP-NY037		
79-00-5	1,1,2-Trichloroethane	ND		ug/m³	0.473	0.867	EPA TO-15	01/28/2025 12:06	01/28/2025 18:25	YR
							Certifications:	NELAC-NY12058,NJDEP-NY037		
75-34-3	1,1-Dichloroethane	ND		ug/m³	0.351	0.867	EPA TO-15	01/28/2025 12:06	01/28/2025 18:25	YR
							Certifications:	NELAC-NY12058,NJDEP-NY037		
75-35-4	1,1-Dichloroethylene	ND		ug/m³	0.172	0.867	EPA TO-15	01/28/2025 12:06	01/28/2025 18:25	YR
							Certifications:	NELAC-NY12058,NJDEP-NY037		
120-82-1	1,2,4-Trichlorobenzene	ND		ug/m³	0.643	0.867	EPA TO-15	01/28/2025 12:06	01/28/2025 18:25	YR
							Certifications:	NELAC-NY12058,NJDEP-NY037		
95-63-6	1,2,4-Trimethylbenzene	ND		ug/m³	0.426	0.867	EPA TO-15	01/28/2025 12:06	01/28/2025 18:25	YR
							Certifications:	NELAC-NY12058,NJDEP-NY037		
106-93-4	1,2-Dibromoethane	ND		ug/m³	0.666	0.867	EPA TO-15	01/28/2025 12:06	01/28/2025 18:25	YR
							Certifications:	NELAC-NY12058,NJDEP-NY037		
95-50-1	1,2-Dichlorobenzene	ND		ug/m³	0.521	0.867	EPA TO-15	01/28/2025 12:06	01/28/2025 18:25	YR
							Certifications:	NELAC-NY12058,NJDEP-NY037		
107-06-2	1,2-Dichloroethane	ND		ug/m³	0.351	0.867	EPA TO-15	01/28/2025 12:06	01/28/2025 18:25	YR
							Certifications:	NELAC-NY12058,NJDEP-NY037		
78-87-5	1,2-Dichloropropane	ND		ug/m³	0.401	0.867	EPA TO-15	01/28/2025 12:06	01/28/2025 18:25	YR
							Certifications:	NELAC-NY12058,NJDEP-NY037		
76-14-2	1,2-Dichlorotetrafluoroethane	ND		ug/m³	0.606	0.867	EPA TO-15	01/28/2025 12:06	01/28/2025 18:25	YR
							Certifications:	NELAC-NY12058,NJDEP-NY037		
108-67-8	1,3,5-Trimethylbenzene	ND		ug/m³	0.426	0.867	EPA TO-15	01/28/2025 12:06	01/28/2025 18:25	YR
							Certifications:	NELAC-NY12058,NJDEP-NY037		
106-99-0	1,3-Butadiene	ND		ug/m³	0.575	0.867	EPA TO-15	01/28/2025 12:06	01/28/2025 18:25	YR
							Certifications:	NELAC-NY12058,NJDEP-NY037		
541-73-1	1,3-Dichlorobenzene	ND		ug/m³	0.521	0.867	EPA TO-15	01/28/2025 12:06	01/28/2025 18:25	YR
							Certifications:	NELAC-NY12058,NJDEP-NY037		
142-28-9	* 1,3-Dichloropropane	ND		ug/m³	0.401	0.867	EPA TO-15	01/28/2025 12:06	01/28/2025 18:25	YR
							Certifications:			
106-46-7	1,4-Dichlorobenzene	ND		ug/m³	0.521	0.867	EPA TO-15	01/28/2025 12:06	01/28/2025 18:25	YR
							Certifications:	NELAC-NY12058,NJDEP-NY037		
123-91-1	1,4-Dioxane	ND		ug/m³	0.625	0.867	EPA TO-15	01/28/2025 12:06	01/28/2025 18:25	YR
							Certifications:	NELAC-NY12058,NJDEP-NY037		
540-84-1	*** 2,2,4-Trimethylpentane**	**0.405**		ug/m³	0.203	0.867	EPA TO-15	01/28/2025 12:06	01/28/2025 18:25	YR
							Certifications:			
78-93-3	**2-Butanone**	**1.48**		ug/m³	0.256	0.867	EPA TO-15	01/28/2025 12:06	01/28/2025 18:25	YR
							Certifications:	NELAC-NY12058,NJDEP-NY037		

Sample Information

Client Sample ID: IA04_012825 **York Sample ID:** 25A1549-04

York Project (SDG) No.	Client Project ID	Matrix	Collection Date/Time	Date Received
25A1549	170361307	Indoor Ambient Air	January 28, 2025 7:45 am	01/28/2025

VOA, TO15 MASTER

Log-in Notes:

Sample Notes:

Sample Prepared by Method: EPA TO15 PREP

CAS No.	Parameter	Result	Flag	Units	Reported to LOQ	Dilution	Reference Method	Date/Time Prepared	Date/Time Analyzed	Analyst
591-78-6	* 2-Hexanone	ND		ug/m³	0.710	0.867	EPA TO-15	01/28/2025 12:06	01/28/2025 18:25	YR
							Certifications:			
107-05-1	3-Chloropropene	ND		ug/m³	1.36	0.867	EPA TO-15	01/28/2025 12:06	01/28/2025 18:25	YR
							Certifications:	NELAC-NY12058,NJDEP-NY037		
108-10-1	4-Methyl-2-pentanone	ND		ug/m³	0.355	0.867	EPA TO-15	01/28/2025 12:06	01/28/2025 18:25	YR
							Certifications:	NELAC-NY12058,NJDEP-NY037		
67-64-1	**Acetone**	**4.86**		ug/m³	1.65	0.867	EPA TO-15	01/28/2025 12:06	01/28/2025 18:25	YR
							Certifications:	NELAC-NY12058,NJDEP-NY037		
107-13-1	Acrylonitrile	ND		ug/m³	2.45	0.867	EPA TO-15	01/28/2025 12:06	01/28/2025 18:25	YR
							Certifications:	NELAC-NY12058,NJDEP-NY037		
71-43-2	**Benzene**	**0.609**		ug/m³	0.277	0.867	EPA TO-15	01/28/2025 12:06	01/28/2025 18:25	YR
							Certifications:	NELAC-NY12058,NJDEP-NY037		
100-44-7	Benzyl chloride	ND		ug/m³	0.449	0.867	EPA TO-15	01/28/2025 12:06	01/28/2025 18:25	YR
							Certifications:	NELAC-NY12058,NJDEP-NY037		
75-27-4	Bromodichloromethane	ND		ug/m³	0.581	0.867	EPA TO-15	01/28/2025 12:06	01/28/2025 18:25	YR
							Certifications:	NELAC-NY12058,NJDEP-NY037		
75-25-2	Bromoform	ND		ug/m³	0.896	0.867	EPA TO-15	01/28/2025 12:06	01/28/2025 18:25	YR
							Certifications:	NELAC-NY12058,NJDEP-NY037		
74-83-9	Bromomethane	ND		ug/m³	0.337	0.867	EPA TO-15	01/28/2025 12:06	01/28/2025 18:25	YR
							Certifications:	NELAC-NY12058,NJDEP-NY037		
75-15-0	Carbon disulfide	ND		ug/m³	0.270	0.867	EPA TO-15	01/28/2025 12:06	01/28/2025 18:25	YR
							Certifications:	NELAC-NY12058,NJDEP-NY037		
56-23-5	**Carbon tetrachloride**	**0.273**		ug/m³	0.136	0.867	EPA TO-15	01/28/2025 12:06	01/28/2025 18:25	YR
							Certifications:	NELAC-NY12058,NJDEP-NY037		
108-90-7	Chlorobenzene	ND		ug/m³	0.399	0.867	EPA TO-15	01/28/2025 12:06	01/28/2025 18:25	YR
							Certifications:	NELAC-NY12058,NJDEP-NY037		
75-00-3	Chloroethane	ND		ug/m³	0.229	0.867	EPA TO-15	01/28/2025 12:06	01/28/2025 18:25	YR
							Certifications:	NELAC-NY12058,NJDEP-NY037		
67-66-3	Chloroform	ND		ug/m³	0.423	0.867	EPA TO-15	01/28/2025 12:06	01/28/2025 18:25	YR
							Certifications:	NELAC-NY12058,NJDEP-NY037		
74-87-3	**Chloromethane**	**1.34**		ug/m³	0.179	0.867	EPA TO-15	01/28/2025 12:06	01/28/2025 18:25	YR
							Certifications:	NELAC-NY12058,NJDEP-NY037		
156-59-2	cis-1,2-Dichloroethylene	ND		ug/m³	0.172	0.867	EPA TO-15	01/28/2025 12:06	01/28/2025 18:25	YR
							Certifications:	NELAC-NY12058,NJDEP-NY037		
10061-01-5	cis-1,3-Dichloropropylene	ND		ug/m³	0.394	0.867	EPA TO-15	01/28/2025 12:06	01/28/2025 18:25	YR
							Certifications:	NELAC-NY12058,NJDEP-NY037		
110-82-7	Cyclohexane	ND		ug/m³	0.298	0.867	EPA TO-15	01/28/2025 12:06	01/28/2025 18:25	YR
							Certifications:	NELAC-NY12058,NJDEP-NY037		
124-48-1	Dibromochloromethane	ND		ug/m³	0.739	0.867	EPA TO-15	01/28/2025 12:06	01/28/2025 18:25	YR
							Certifications:	NELAC-NY12058,NJDEP-NY037		
75-71-8	**Dichlorodifluoromethane**	**2.10**		ug/m³	0.429	0.867	EPA TO-15	01/28/2025 12:06	01/28/2025 18:25	YR
							Certifications:	NELAC-NY12058,NJDEP-NY037		
141-78-6	*** Ethyl acetate**	**3.87**		ug/m³	0.625	0.867	EPA TO-15	01/28/2025 12:06	01/28/2025 18:25	YR
							Certifications:			

Sample Information

Client Sample ID: IA04_012825 **York Sample ID:** 25A1549-04

York Project (SDG) No.	Client Project ID	Matrix	Collection Date/Time	Date Received
25A1549	170361307	Indoor Ambient Air	January 28, 2025 7:45 am	01/28/2025

VOA, TO15 MASTER **Log-in Notes:** **Sample Notes:**

Sample Prepared by Method: EPA TO15 PREP

CAS No.	Parameter	Result	Flag	Units	Reported to LOQ	Dilution	Reference Method	Date/Time Prepared	Date/Time Analyzed	Analyst
100-41-4	**Ethyl Benzene**	**0.376**		ug/m³	0.376	0.867	EPA TO-15	01/28/2025 12:06	01/28/2025 18:25	YR
							Certifications: NELAC-NY12058,NJDEP-NY037			
87-68-3	Hexachlorobutadiene	ND		ug/m³	0.925	0.867	EPA TO-15	01/28/2025 12:06	01/28/2025 18:25	YR
							Certifications: NELAC-NY12058,NJDEP-NY037			
67-63-0	**Isopropanol**	**4.73**		ug/m³	1.28	0.867	EPA TO-15	01/28/2025 12:06	01/28/2025 18:25	YR
							Certifications: NELAC-NY12058,NJDEP-NY037			
80-62-6	Methyl Methacrylate	ND		ug/m³	0.355	0.867	EPA TO-15	01/28/2025 12:06	01/28/2025 18:25	YR
							Certifications: NELAC-NY12058,NJDEP-NY037			
1634-04-4	Methyl tert-butyl ether (MTBE)	ND		ug/m³	0.313	0.867	EPA TO-15	01/28/2025 12:06	01/28/2025 18:25	YR
							Certifications: NELAC-NY12058,NJDEP-NY037			
75-09-2	Methylene chloride	ND		ug/m³	1.81	0.867	EPA TO-15	01/28/2025 12:06	01/28/2025 18:25	YR
							Certifications: NELAC-NY12058,NJDEP-NY037			
91-20-3	* Naphthalene	ND		ug/m³	0.909	0.867	EPA TO-15	01/28/2025 12:06	01/28/2025 18:25	YR
							Certifications: NJDEP-NY037			
142-82-5	n-Heptane	ND		ug/m³	0.355	0.867	EPA TO-15	01/28/2025 12:06	01/28/2025 18:25	YR
							Certifications: NELAC-NY12058,NJDEP-NY037			
110-54-3	**n-Hexane**	**0.581**		ug/m³	0.306	0.867	EPA TO-15	01/28/2025 12:06	01/28/2025 18:25	YR
							Certifications: NELAC-NY12058,NJDEP-NY037			
95-47-6	**o-Xylene**	**0.489**		ug/m³	0.376	0.867	EPA TO-15	01/28/2025 12:06	01/28/2025 18:25	YR
							Certifications: NELAC-NY12058,NJDEP-NY037			
179601-23-1	**p- & m- Xylenes**	**1.36**		ug/m³	0.753	0.867	EPA TO-15	01/28/2025 12:06	01/28/2025 18:25	YR
							Certifications: NELAC-NY12058,NJDEP-NY037			
622-96-8	* p-Ethyltoluene	ND		ug/m³	0.426	0.867	EPA TO-15	01/28/2025 12:06	01/28/2025 18:25	YR
							Certifications:			
115-07-1	*** Propylene**	**0.925**		ug/m³	0.149	0.867	EPA TO-15	01/28/2025 12:06	01/28/2025 18:25	YR
							Certifications:			
100-42-5	Styrene	ND		ug/m³	0.369	0.867	EPA TO-15	01/28/2025 12:06	01/28/2025 18:25	YR
							Certifications: NELAC-NY12058,NJDEP-NY037			
127-18-4	Tetrachloroethylene	ND		ug/m³	0.588	0.867	EPA TO-15	01/28/2025 12:06	01/28/2025 18:25	YR
							Certifications: NELAC-NY12058,NJDEP-NY037			
109-99-9	* Tetrahydrofuran	ND		ug/m³	0.511	0.867	EPA TO-15	01/28/2025 12:06	01/28/2025 18:25	YR
							Certifications:			
108-88-3	**Toluene**	**1.90**		ug/m³	0.327	0.867	EPA TO-15	01/28/2025 12:06	01/28/2025 18:25	YR
							Certifications: NELAC-NY12058,NJDEP-NY037			
156-60-5	trans-1,2-Dichloroethylene	ND		ug/m³	0.344	0.867	EPA TO-15	01/28/2025 12:06	01/28/2025 18:25	YR
							Certifications: NELAC-NY12058,NJDEP-NY037			
10061-02-6	trans-1,3-Dichloropropylene	ND		ug/m³	0.394	0.867	EPA TO-15	01/28/2025 12:06	01/28/2025 18:25	YR
							Certifications: NELAC-NY12058,NJDEP-NY037			
79-01-6	**Trichloroethylene**	**0.140**		ug/m³	0.116	0.867	EPA TO-15	01/28/2025 12:06	01/28/2025 18:25	YR
							Certifications: NELAC-NY12058,NJDEP-NY037			
75-69-4	**Trichlorofluoromethane (Freon 11)**	**1.12**		ug/m³	0.487	0.867	EPA TO-15	01/28/2025 12:06	01/28/2025 18:25	YR
							Certifications: NELAC-NY12058,NJDEP-NY037			

Sample Information

Client Sample ID: IA04_012825 **York Sample ID:** 25A1549-04

York Project (SDG) No.	Client Project ID	Matrix	Collection Date/Time	Date Received
25A1549	170361307	Indoor Ambient Air	January 28, 2025 7:45 am	01/28/2025

VOA, TO15 MASTER

Log-in Notes:

Sample Notes:

Sample Prepared by Method: EPA TO15 PREP

CAS No.	Parameter	Result	Flag	Units	Reported to LOQ	Dilution	Reference Method	Date/Time Prepared	Date/Time Analyzed	Analyst
108-05-4	Vinyl acetate	ND	ICVE, TO-LCS-L	ug/m³	0.305	0.867	EPA TO-15	01/28/2025 12:06	01/28/2025 18:25	YR
							Certifications:	NELAC-NY12058,NJDEP-NY037		
593-60-2	Vinyl bromide	ND		ug/m³	0.379	0.867	EPA TO-15	01/28/2025 12:06	01/28/2025 18:25	YR
							Certifications:	NELAC-NY12058,NJDEP-NY037		
75-01-4	Vinyl Chloride	ND		ug/m³	0.111	0.867	EPA TO-15	01/28/2025 12:06	01/28/2025 18:25	YR
							Certifications:	NELAC-NY12058,NJDEP-NY037		

Sample Information

Client Sample ID: AA01_012825 **York Sample ID:** 25A1549-05

York Project (SDG) No.	Client Project ID	Matrix	Collection Date/Time	Date Received
25A1549	170361307	Outdoor Ambient Air	January 28, 2025 8:50 am	01/28/2025

VOA, TO15 MASTER **Log-in Notes:** **Sample Notes:**

Sample Prepared by Method: EPA TO15 PREP

CAS No.	Parameter	Result	Flag	Units	Reported to LOQ	Dilution	Reference Method	Date/Time Prepared	Date/Time Analyzed	Analyst
630-20-6	* 1,1,1,2-Tetrachloroethane	ND		ug/m³	0.557	0.811	EPA TO-15	01/28/2025 12:06	01/28/2025 19:29	YR
							Certifications:			
71-55-6	1,1,1-Trichloroethane	ND		ug/m³	0.443	0.811	EPA TO-15	01/28/2025 12:06	01/28/2025 19:29	YR
							Certifications:	NELAC-NY12058,NJDEP-NY037		
79-34-5	1,1,2,2-Tetrachloroethane	ND		ug/m³	0.557	0.811	EPA TO-15	01/28/2025 12:06	01/28/2025 19:29	YR
							Certifications:	NELAC-NY12058,NJDEP-NY037		
76-13-1	1,1,2-Trichloro-1,2,2-trifluoroethane (Freon 113)	ND		ug/m³	0.622	0.811	EPA TO-15	01/28/2025 12:06	01/28/2025 19:29	YR
							Certifications:	NELAC-NY12058,NJDEP-NY037		
79-00-5	1,1,2-Trichloroethane	ND		ug/m³	0.443	0.811	EPA TO-15	01/28/2025 12:06	01/28/2025 19:29	YR
							Certifications:	NELAC-NY12058,NJDEP-NY037		
75-34-3	1,1-Dichloroethane	ND		ug/m³	0.328	0.811	EPA TO-15	01/28/2025 12:06	01/28/2025 19:29	YR
							Certifications:	NELAC-NY12058,NJDEP-NY037		
75-35-4	1,1-Dichloroethylene	ND		ug/m³	0.161	0.811	EPA TO-15	01/28/2025 12:06	01/28/2025 19:29	YR
							Certifications:	NELAC-NY12058,NJDEP-NY037		
120-82-1	1,2,4-Trichlorobenzene	ND		ug/m³	0.602	0.811	EPA TO-15	01/28/2025 12:06	01/28/2025 19:29	YR
							Certifications:	NELAC-NY12058,NJDEP-NY037		
95-63-6	**1,2,4-Trimethylbenzene**	**0.518**		ug/m³	0.399	0.811	EPA TO-15	01/28/2025 12:06	01/28/2025 19:29	YR
							Certifications:	NELAC-NY12058,NJDEP-NY037		
106-93-4	1,2-Dibromoethane	ND		ug/m³	0.623	0.811	EPA TO-15	01/28/2025 12:06	01/28/2025 19:29	YR
							Certifications:	NELAC-NY12058,NJDEP-NY037		
95-50-1	1,2-Dichlorobenzene	ND		ug/m³	0.488	0.811	EPA TO-15	01/28/2025 12:06	01/28/2025 19:29	YR
							Certifications:	NELAC-NY12058,NJDEP-NY037		
107-06-2	1,2-Dichloroethane	ND		ug/m³	0.328	0.811	EPA TO-15	01/28/2025 12:06	01/28/2025 19:29	YR
							Certifications:	NELAC-NY12058,NJDEP-NY037		
78-87-5	1,2-Dichloropropane	ND		ug/m³	0.375	0.811	EPA TO-15	01/28/2025 12:06	01/28/2025 19:29	YR
							Certifications:	NELAC-NY12058,NJDEP-NY037		
76-14-2	1,2-Dichlorotetrafluoroethane	ND		ug/m³	0.567	0.811	EPA TO-15	01/28/2025 12:06	01/28/2025 19:29	YR
							Certifications:	NELAC-NY12058,NJDEP-NY037		
108-67-8	1,3,5-Trimethylbenzene	ND		ug/m³	0.399	0.811	EPA TO-15	01/28/2025 12:06	01/28/2025 19:29	YR
							Certifications:	NELAC-NY12058,NJDEP-NY037		
106-99-0	1,3-Butadiene	ND		ug/m³	0.538	0.811	EPA TO-15	01/28/2025 12:06	01/28/2025 19:29	YR
							Certifications:	NELAC-NY12058,NJDEP-NY037		
541-73-1	1,3-Dichlorobenzene	ND		ug/m³	0.488	0.811	EPA TO-15	01/28/2025 12:06	01/28/2025 19:29	YR
							Certifications:	NELAC-NY12058,NJDEP-NY037		
142-28-9	* 1,3-Dichloropropane	ND		ug/m³	0.375	0.811	EPA TO-15	01/28/2025 12:06	01/28/2025 19:29	YR
							Certifications:			
106-46-7	1,4-Dichlorobenzene	ND		ug/m³	0.488	0.811	EPA TO-15	01/28/2025 12:06	01/28/2025 19:29	YR
							Certifications:	NELAC-NY12058,NJDEP-NY037		
123-91-1	1,4-Dioxane	ND		ug/m³	0.584	0.811	EPA TO-15	01/28/2025 12:06	01/28/2025 19:29	YR
							Certifications:	NELAC-NY12058,NJDEP-NY037		
540-84-1	*** 2,2,4-Trimethylpentane**	**1.14**		ug/m³	0.189	0.811	EPA TO-15	01/28/2025 12:06	01/28/2025 19:29	YR
							Certifications:			
78-93-3	**2-Butanone**	**0.598**		ug/m³	0.239	0.811	EPA TO-15	01/28/2025 12:06	01/28/2025 19:29	YR
							Certifications:	NELAC-NY12058,NJDEP-NY037		

Sample Information

Client Sample ID: AA01_012825 **York Sample ID:** 25A1549-05

York Project (SDG) No.	Client Project ID	Matrix	Collection Date/Time	Date Received
25A1549	170361307	Outdoor Ambient Air	January 28, 2025 8:50 am	01/28/2025

VOA, TO15 MASTER **Log-in Notes:** **Sample Notes:**

Sample Prepared by Method: EPA TO15 PREP

CAS No.	Parameter	Result	Flag	Units	Reported to LOQ	Dilution	Reference Method	Date/Time Prepared	Date/Time Analyzed	Analyst
591-78-6	* 2-Hexanone	ND		ug/m³	0.664	0.811	EPA TO-15	01/28/2025 12:06	01/28/2025 19:29	YR
							Certifications:			
107-05-1	3-Chloropropene	ND		ug/m³	1.27	0.811	EPA TO-15	01/28/2025 12:06	01/28/2025 19:29	YR
							Certifications:	NELAC-NY12058,NJDEP-NY037		
108-10-1	4-Methyl-2-pentanone	ND		ug/m³	0.332	0.811	EPA TO-15	01/28/2025 12:06	01/28/2025 19:29	YR
							Certifications:	NELAC-NY12058,NJDEP-NY037		
67-64-1	**Acetone**	**3.62**		ug/m³	1.54	0.811	EPA TO-15	01/28/2025 12:06	01/28/2025 19:29	YR
							Certifications:	NELAC-NY12058,NJDEP-NY037		
107-13-1	Acrylonitrile	ND		ug/m³	2.29	0.811	EPA TO-15	01/28/2025 12:06	01/28/2025 19:29	YR
							Certifications:	NELAC-NY12058,NJDEP-NY037		
71-43-2	**Benzene**	**0.985**		ug/m³	0.259	0.811	EPA TO-15	01/28/2025 12:06	01/28/2025 19:29	YR
							Certifications:	NELAC-NY12058,NJDEP-NY037		
100-44-7	Benzyl chloride	ND		ug/m³	0.420	0.811	EPA TO-15	01/28/2025 12:06	01/28/2025 19:29	YR
							Certifications:	NELAC-NY12058,NJDEP-NY037		
75-27-4	Bromodichloromethane	ND		ug/m³	0.543	0.811	EPA TO-15	01/28/2025 12:06	01/28/2025 19:29	YR
							Certifications:	NELAC-NY12058,NJDEP-NY037		
75-25-2	Bromoform	ND		ug/m³	0.838	0.811	EPA TO-15	01/28/2025 12:06	01/28/2025 19:29	YR
							Certifications:	NELAC-NY12058,NJDEP-NY037		
74-83-9	Bromomethane	ND		ug/m³	0.315	0.811	EPA TO-15	01/28/2025 12:06	01/28/2025 19:29	YR
							Certifications:	NELAC-NY12058,NJDEP-NY037		
75-15-0	Carbon disulfide	ND		ug/m³	0.253	0.811	EPA TO-15	01/28/2025 12:06	01/28/2025 19:29	YR
							Certifications:	NELAC-NY12058,NJDEP-NY037		
56-23-5	**Carbon tetrachloride**	**0.306**		ug/m³	0.128	0.811	EPA TO-15	01/28/2025 12:06	01/28/2025 19:29	YR
							Certifications:	NELAC-NY12058,NJDEP-NY037		
108-90-7	Chlorobenzene	ND		ug/m³	0.373	0.811	EPA TO-15	01/28/2025 12:06	01/28/2025 19:29	YR
							Certifications:	NELAC-NY12058,NJDEP-NY037		
75-00-3	Chloroethane	ND		ug/m³	0.214	0.811	EPA TO-15	01/28/2025 12:06	01/28/2025 19:29	YR
							Certifications:	NELAC-NY12058,NJDEP-NY037		
67-66-3	Chloroform	ND		ug/m³	0.396	0.811	EPA TO-15	01/28/2025 12:06	01/28/2025 19:29	YR
							Certifications:	NELAC-NY12058,NJDEP-NY037		
74-87-3	**Chloromethane**	**1.36**		ug/m³	0.167	0.811	EPA TO-15	01/28/2025 12:06	01/28/2025 19:29	YR
							Certifications:	NELAC-NY12058,NJDEP-NY037		
156-59-2	cis-1,2-Dichloroethylene	ND		ug/m³	0.161	0.811	EPA TO-15	01/28/2025 12:06	01/28/2025 19:29	YR
							Certifications:	NELAC-NY12058,NJDEP-NY037		
10061-01-5	cis-1,3-Dichloropropylene	ND		ug/m³	0.368	0.811	EPA TO-15	01/28/2025 12:06	01/28/2025 19:29	YR
							Certifications:	NELAC-NY12058,NJDEP-NY037		
110-82-7	Cyclohexane	ND		ug/m³	0.279	0.811	EPA TO-15	01/28/2025 12:06	01/28/2025 19:29	YR
							Certifications:	NELAC-NY12058,NJDEP-NY037		
124-48-1	Dibromochloromethane	ND		ug/m³	0.691	0.811	EPA TO-15	01/28/2025 12:06	01/28/2025 19:29	YR
							Certifications:	NELAC-NY12058,NJDEP-NY037		
75-71-8	**Dichlorodifluoromethane**	**2.13**		ug/m³	0.401	0.811	EPA TO-15	01/28/2025 12:06	01/28/2025 19:29	YR
							Certifications:	NELAC-NY12058,NJDEP-NY037		
141-78-6	* Ethyl acetate	ND		ug/m³	0.584	0.811	EPA TO-15	01/28/2025 12:06	01/28/2025 19:29	YR
							Certifications:			

Sample Information

Client Sample ID: AA01_012825 **York Sample ID:** 25A1549-05

York Project (SDG) No.	Client Project ID	Matrix	Collection Date/Time	Date Received
25A1549	170361307	Outdoor Ambient Air	January 28, 2025 8:50 am	01/28/2025

VOA, TO15 MASTER **Log-in Notes:** **Sample Notes:**

Sample Prepared by Method: EPA TO15 PREP

CAS No.	Parameter	Result	Flag	Units	Reported to LOQ	Dilution	Reference Method	Date/Time Prepared	Date/Time Analyzed	Analyst
100-41-4	**Ethyl Benzene**	**0.704**		ug/m³	0.352	0.811	EPA TO-15	01/28/2025 12:06	01/28/2025 19:29	YR
							Certifications: NELAC-NY12058,NJDEP-NY037			
87-68-3	Hexachlorobutadiene	ND		ug/m³	0.865	0.811	EPA TO-15	01/28/2025 12:06	01/28/2025 19:29	YR
							Certifications: NELAC-NY12058,NJDEP-NY037			
67-63-0	Isopropanol	ND		ug/m³	1.20	0.811	EPA TO-15	01/28/2025 12:06	01/28/2025 19:29	YR
							Certifications: NELAC-NY12058,NJDEP-NY037			
80-62-6	**Methyl Methacrylate**	**0.432**		ug/m³	0.332	0.811	EPA TO-15	01/28/2025 12:06	01/28/2025 19:29	YR
							Certifications: NELAC-NY12058,NJDEP-NY037			
1634-04-4	Methyl tert-butyl ether (MTBE)	ND		ug/m³	0.292	0.811	EPA TO-15	01/28/2025 12:06	01/28/2025 19:29	YR
							Certifications: NELAC-NY12058,NJDEP-NY037			
75-09-2	Methylene chloride	ND		ug/m³	1.69	0.811	EPA TO-15	01/28/2025 12:06	01/28/2025 19:29	YR
							Certifications: NELAC-NY12058,NJDEP-NY037			
91-20-3	* Naphthalene	ND		ug/m³	0.850	0.811	EPA TO-15	01/28/2025 12:06	01/28/2025 19:29	YR
							Certifications: NJDEP-NY037			
142-82-5	**n-Heptane**	**0.465**		ug/m³	0.332	0.811	EPA TO-15	01/28/2025 12:06	01/28/2025 19:29	YR
							Certifications: NELAC-NY12058,NJDEP-NY037			
110-54-3	**n-Hexane**	**0.829**		ug/m³	0.286	0.811	EPA TO-15	01/28/2025 12:06	01/28/2025 19:29	YR
							Certifications: NELAC-NY12058,NJDEP-NY037			
95-47-6	**o-Xylene**	**0.669**		ug/m³	0.352	0.811	EPA TO-15	01/28/2025 12:06	01/28/2025 19:29	YR
							Certifications: NELAC-NY12058,NJDEP-NY037			
179601-23-1	**p- & m- Xylenes**	**1.66**		ug/m³	0.704	0.811	EPA TO-15	01/28/2025 12:06	01/28/2025 19:29	YR
							Certifications: NELAC-NY12058,NJDEP-NY037			
622-96-8	*** p-Ethyltoluene**	**0.439**		ug/m³	0.399	0.811	EPA TO-15	01/28/2025 12:06	01/28/2025 19:29	YR
							Certifications:			
115-07-1	*** Propylene**	**1.41**		ug/m³	0.140	0.811	EPA TO-15	01/28/2025 12:06	01/28/2025 19:29	YR
							Certifications:			
100-42-5	Styrene	ND		ug/m³	0.345	0.811	EPA TO-15	01/28/2025 12:06	01/28/2025 19:29	YR
							Certifications: NELAC-NY12058,NJDEP-NY037			
127-18-4	Tetrachloroethylene	ND		ug/m³	0.550	0.811	EPA TO-15	01/28/2025 12:06	01/28/2025 19:29	YR
							Certifications: NELAC-NY12058,NJDEP-NY037			
109-99-9	* Tetrahydrofuran	ND		ug/m³	0.478	0.811	EPA TO-15	01/28/2025 12:06	01/28/2025 19:29	YR
							Certifications:			
108-88-3	**Toluene**	**3.30**		ug/m³	0.306	0.811	EPA TO-15	01/28/2025 12:06	01/28/2025 19:29	YR
							Certifications: NELAC-NY12058,NJDEP-NY037			
156-60-5	trans-1,2-Dichloroethylene	ND		ug/m³	0.322	0.811	EPA TO-15	01/28/2025 12:06	01/28/2025 19:29	YR
							Certifications: NELAC-NY12058,NJDEP-NY037			
10061-02-6	trans-1,3-Dichloropropylene	ND		ug/m³	0.368	0.811	EPA TO-15	01/28/2025 12:06	01/28/2025 19:29	YR
							Certifications: NELAC-NY12058,NJDEP-NY037			
79-01-6	Trichloroethylene	ND		ug/m³	0.109	0.811	EPA TO-15	01/28/2025 12:06	01/28/2025 19:29	YR
							Certifications: NELAC-NY12058,NJDEP-NY037			
75-69-4	**Trichlorofluoromethane (Freon 11)**	**1.14**		ug/m³	0.456	0.811	EPA TO-15	01/28/2025 12:06	01/28/2025 19:29	YR
							Certifications: NELAC-NY12058,NJDEP-NY037			

Sample Information

Client Sample ID: AA01_012825 **York Sample ID:** 25A1549-05

York Project (SDG) No.	Client Project ID	Matrix	Collection Date/Time	Date Received
25A1549	170361307	Outdoor Ambient Air	January 28, 2025 8:50 am	01/28/2025

VOA, TO15 MASTER

Log-in Notes:

Sample Notes:

Sample Prepared by Method: EPA TO15 PREP

CAS No.	Parameter	Result	Flag	Units	Reported to LOQ	Dilution	Reference Method	Date/Time Prepared	Date/Time Analyzed	Analyst
108-05-4	Vinyl acetate	ND	ICVE, TO-LCS-L	ug/m³	0.286	0.811	EPA TO-15	01/28/2025 12:06	01/28/2025 19:29	YR
							Certifications:	NELAC-NY12058,NJDEP-NY037		
593-60-2	Vinyl bromide	ND		ug/m³	0.355	0.811	EPA TO-15	01/28/2025 12:06	01/28/2025 19:29	YR
							Certifications:	NELAC-NY12058,NJDEP-NY037		
75-01-4	Vinyl Chloride	ND		ug/m³	0.104	0.811	EPA TO-15	01/28/2025 12:06	01/28/2025 19:29	YR
							Certifications:	NELAC-NY12058,NJDEP-NY037		

Analytical Batch Summary

Batch ID: BA50253 **Preparation Method:** EPA TO15 PREP **Prepared By:** YR

YORK Sample ID	Client Sample ID	Preparation Date
25A1278-07	CAN 48288 / FC 21021	01/02/25
BA50253-BLK1	Blank	01/03/25
BA50253-BS1	LCS	01/03/25

Batch ID: BA50399 **Preparation Method:** EPA TO15 PREP **Prepared By:** YR

YORK Sample ID	Client Sample ID	Preparation Date
25A1278-04	CAN 41939 / FC 19381	01/07/25
25A1278-05	CAN 28844 / FC 21023	01/07/25
BA50399-BLK1	Blank	01/06/25
BA50399-BS1	LCS	01/06/25

Batch ID: BA50493 **Preparation Method:** EPA TO15 PREP **Prepared By:** YR

YORK Sample ID	Client Sample ID	Preparation Date
25A1278-02	CAN 20944 / FC 19407	01/08/25
BA50493-BLK1	Blank	01/08/25
BA50493-BS1	LCS	01/08/25

Batch ID: BA50866 **Preparation Method:** EPA TO15 PREP **Prepared By:** YR

YORK Sample ID	Client Sample ID	Preparation Date
25A1278-06	CAN 28850 / FC 19428	01/14/25
BA50866-BLK1	Blank	01/14/25
BA50866-BS1	LCS	01/14/25

Batch ID: BA51746 **Preparation Method:** EPA TO15 PREP **Prepared By:** BMC

YORK Sample ID	Client Sample ID	Preparation Date
25A1549-01	IA01_012825	01/28/25
25A1549-02	IA02_012825	01/28/25
25A1549-03	IA03_012825	01/28/25
25A1549-04	IA04_012825	01/28/25
25A1549-05	AA01_012825	01/28/25
BA51746-BLK1	Blank	01/28/25
BA51746-BS1	LCS	01/28/25
BA51746-DUP1	Duplicate	01/28/25

Volatile Organic Compounds in Air by GC/MS - Quality Control Data

York Analytical Laboratories, Inc. - Stratford

Analyte	Result	Reporting Limit	Units	Spike Level	Source* Result	%REC	%REC Limits	Flag	RPD	RPD Limit	Flag
Batch BA50253 - EPA TO15 PREP											
Blank (BA50253-BLK1) Blank									Prepared & Analyzed: 01/03/2025		
1,1,1,2-Tetrachloroethane	ND	0.687	ug/m³								
1,1,1-Trichloroethane	ND	0.546	"								
1,1,2,2-Tetrachloroethane	ND	0.687	"								
1,1,2-Trichloro-1,2,2-trifluoroethane (Freon 113)	ND	0.766	"								
1,1,2-Trichloroethane	ND	0.546	"								
1,1-Dichloroethane	ND	0.405	"								
1,1-Dichloroethylene	ND	0.198	"								
1,2,4-Trichlorobenzene	ND	0.742	"								
1,2,4-Trimethylbenzene	ND	0.492	"								
1,2-Dibromoethane	ND	0.768	"								
1,2-Dichlorobenzene	ND	0.601	"								
1,2-Dichloroethane	ND	0.405	"								
1,2-Dichloropropane	ND	0.462	"								
1,2-Dichlorotetrafluoroethane	ND	0.699	"								
1,3,5-Trimethylbenzene	ND	0.492	"								
1,3-Butadiene	ND	0.664	"								
1,3-Dichlorobenzene	ND	0.601	"								
1,3-Dichloropropane	ND	0.462	"								
1,4-Dichlorobenzene	ND	0.601	"								
1,4-Dioxane	ND	0.721	"								
2,2,4-Trimethylpentane	ND	0.234	"								
2-Butanone	ND	0.295	"								
2-Hexanone	ND	0.819	"								
3-Chloropropene	ND	1.57	"								
4-Methyl-2-pentanone	ND	0.410	"								
Acetone	ND	1.90	"								
Acrylonitrile	ND	2.82	"								
Benzene	ND	0.319	"								
Benzyl chloride	ND	0.518	"								
Bromodichloromethane	ND	0.670	"								
Bromoform	ND	1.03	"								
Bromomethane	ND	0.388	"								
Carbon disulfide	ND	0.311	"								
Carbon tetrachloride	ND	0.157	"								
Chlorobenzene	ND	0.460	"								
Chloroethane	ND	0.264	"								
Chloroform	ND	0.488	"								
Chloromethane	ND	0.207	"								
cis-1,2-Dichloroethylene	ND	0.198	"								
cis-1,3-Dichloropropylene	ND	0.454	"								
Cyclohexane	ND	0.344	"								
Dibromochloromethane	ND	0.852	"								
Dichlorodifluoromethane	ND	0.495	"								
Ethyl acetate	ND	0.721	"								
Ethyl Benzene	ND	0.434	"								
Hexachlorobutadiene	ND	1.07	"								
Isopropanol	ND	1.47	"								
Methyl Methacrylate	ND	0.409	"								
Methyl tert-butyl ether (MTBE)	ND	0.361	"								
Methylene chloride	ND	2.08	"								

Volatile Organic Compounds in Air by GC/MS - Quality Control Data

York Analytical Laboratories, Inc. - Stratford

Batch BA50253 - EPA TO15 PREP

Blank (BA50253-BLK1) Blank — Prepared & Analyzed: 01/03/2025

Analyte	Result	Reporting Limit	Units	Spike Level	Source* Result	%REC	%REC Limits	Flag	RPD	RPD Limit	Flag
Naphthalene	ND	1.05	ug/m³								
n-Heptane	ND	0.410	"								
n-Hexane	ND	0.352	"								
o-Xylene	ND	0.434	"								
p- & m- Xylenes	ND	0.868	"								
p-Ethyltoluene	ND	0.492	"								
Propylene	ND	0.172	"								
Styrene	ND	0.426	"								
Tetrachloroethylene	ND	0.678	"								
Tetrahydrofuran	ND	0.590	"								
Toluene	ND	0.377	"								
trans-1,2-Dichloroethylene	ND	0.396	"								
trans-1,3-Dichloropropylene	ND	0.454	"								
Trichloroethylene	0.161	0.134	"								
Trichlorofluoromethane (Freon 11)	ND	0.562	"								
Vinyl acetate	ND	0.352	"								
Vinyl bromide	ND	0.437	"								
Vinyl Chloride	ND	0.128	"								

LCS (BA50253-BS1) LCS — Prepared & Analyzed: 01/03/2025

Analyte	Result	Reporting Limit	Units	Spike Level	Source* Result	%REC	%REC Limits	Flag	RPD	RPD Limit	Flag
1,1,1,2-Tetrachloroethane	9.91		ppbv	10.0		99.1	70-130				
1,1,1-Trichloroethane	9.51		"	10.0		95.1	70-130				
1,1,2,2-Tetrachloroethane	9.90		"	10.0		99.0	70-130				
1,1,2-Trichloro-1,2,2-trifluoroethane (Freon 113)	9.85		"	10.0		98.5	70-130				
1,1,2-Trichloroethane	11.1		"	10.0		111	70-130				
1,1-Dichloroethane	10.1		"	10.0		101	70-130				
1,1-Dichloroethylene	9.87		"	10.0		98.7	70-130				
1,2,4-Trichlorobenzene	8.05		"	10.0		80.5	70-130				
1,2,4-Trimethylbenzene	10.6		"	10.0		106	70-130				
1,2-Dibromoethane	10.2		"	10.0		102	70-130				
1,2-Dichlorobenzene	10.3		"	10.0		103	70-130				
1,2-Dichloroethane	10.4		"	10.0		104	70-130				
1,2-Dichloropropane	11.3		"	10.0		113	70-130				
1,2-Dichlorotetrafluoroethane	15.7		"	10.0		157	70-130	High Bias			
1,3,5-Trimethylbenzene	10.4		"	10.0		104	70-130				
1,3-Butadiene	27.6		"	10.0		276	70-130	High Bias			
1,3-Dichlorobenzene	10.5		"	10.0		105	70-130				
1,3-Dichloropropane	10.3		"	10.0		103	70-130				
1,4-Dichlorobenzene	10.5		"	10.0		105	70-130				
1,4-Dioxane	9.74		"	10.0		97.4	70-130				
2,2,4-Trimethylpentane	9.75		"	10.0		97.5	70-130				
2-Butanone	10.1		"	10.0		101	70-130				
2-Hexanone	13.4		"	10.0		134	70-130	High Bias			
3-Chloropropene	9.80		"	10.0		98.0	70-130				
4-Methyl-2-pentanone	12.1		"	10.0		121	70-130				
Acetone	10.1		"	10.0		101	70-130				
Acrylonitrile	9.12		"	10.0		91.2	70-130				
Benzene	9.52		"	10.0		95.2	70-130				
Benzyl chloride	12.2		"	10.0		122	70-130				
Bromodichloromethane	11.7		"	10.0		117	70-130				
Bromoform	9.97		"	10.0		99.7	70-130				

Volatile Organic Compounds in Air by GC/MS - Quality Control Data

York Analytical Laboratories, Inc. - Stratford

Analyte	Result	Reporting Limit	Units	Spike Level	Source* Result	%REC	%REC Limits	Flag	RPD	RPD Limit	Flag
Batch BA50253 - EPA TO15 PREP											
LCS (BA50253-BS1) LCS							Prepared & Analyzed: 01/03/2025				
Bromomethane	12.2		ppbv	10.0		122	70-130				
Carbon disulfide	9.71		"	10.0		97.1	70-130				
Carbon tetrachloride	9.97		"	10.0		99.7	70-130				
Chlorobenzene	9.25		"	10.0		92.5	70-130				
Chloroethane	9.94		"	10.0		99.4	70-130				
Chloroform	9.77		"	10.0		97.7	70-130				
Chloromethane	26.6		"	10.0		266	70-130	High Bias			
cis-1,2-Dichloroethylene	8.67		"	10.0		86.7	70-130				
cis-1,3-Dichloropropylene	10.7		"	10.0		107	70-130				
Cyclohexane	9.36		"	10.0		93.6	70-130				
Dibromochloromethane	10.9		"	10.0		109	70-130				
Dichlorodifluoromethane	11.1		"	10.0		111	70-130				
Ethyl acetate	10.4		"	10.0		104	70-130				
Ethyl Benzene	9.55		"	10.0		95.5	70-130				
Hexachlorobutadiene	9.38		"	10.0		93.8	70-130				
Isopropanol	9.76		"	10.0		97.6	70-130				
Methyl Methacrylate	11.6		"	10.0		116	70-130				
Methyl tert-butyl ether (MTBE)	8.89		"	10.0		88.9	70-130				
Methylene chloride	7.71		"	10.0		77.1	70-130				
Naphthalene	8.56		"	10.0		85.6	70-130				
n-Heptane	10.7		"	10.0		107	70-130				
n-Hexane	9.67		"	10.0		96.7	70-130				
o-Xylene	10.2		"	10.0		102	70-130				
p- & m- Xylenes	22.7		"	20.0		114	70-130				
p-Ethyltoluene	10.3		"	10.0		103	70-130				
Propylene	10.4		"	10.0		104	70-130				
Styrene	10.6		"	10.0		106	70-130				
Tetrachloroethylene	10.0		"	10.0		100	70-130				
Tetrahydrofuran	9.84		"	10.0		98.4	70-130				
Toluene	10.4		"	10.0		104	70-130				
trans-1,2-Dichloroethylene	9.76		"	10.0		97.6	70-130				
trans-1,3-Dichloropropylene	10.9		"	10.0		109	70-130				
Trichloroethylene	9.81		"	10.0		98.1	70-130				
Trichlorofluoromethane (Freon 11)	10.5		"	10.0		105	70-130				
Vinyl acetate	9.34		"	10.0		93.4	70-130				
Vinyl bromide	9.44		"	10.0		94.4	70-130				
Vinyl Chloride	24.6		"	10.0		246	70-130	High Bias			

Volatile Organic Compounds in Air by GC/MS - Quality Control Data

York Analytical Laboratories, Inc. - Stratford

Analyte	Result	Reporting Limit	Units	Spike Level	Source* Result	%REC	%REC Limits	Flag	RPD	RPD Limit	Flag
Batch BA50399 - EPA TO15 PREP											
Blank (BA50399-BLK1) Blank									Prepared: 01/06/2025 Analyzed: 01/07/2025		
1,1,1,2-Tetrachloroethane	ND	0.687	ug/m³								
1,1,1-Trichloroethane	ND	0.546	"								
1,1,2,2-Tetrachloroethane	ND	0.687	"								
1,1,2-Trichloro-1,2,2-trifluoroethane (Freon 113)	ND	0.766	"								
1,1,2-Trichloroethane	ND	0.546	"								
1,1-Dichloroethane	ND	0.405	"								
1,1-Dichloroethylene	ND	0.198	"								
1,2,4-Trichlorobenzene	ND	0.742	"								
1,2,4-Trimethylbenzene	ND	0.492	"								
1,2-Dibromoethane	ND	0.768	"								
1,2-Dichlorobenzene	ND	0.601	"								
1,2-Dichloroethane	ND	0.405	"								
1,2-Dichloropropane	ND	0.462	"								
1,2-Dichlorotetrafluoroethane	ND	0.699	"								
1,3,5-Trimethylbenzene	ND	0.492	"								
1,3-Butadiene	ND	0.664	"								
1,3-Dichlorobenzene	ND	0.601	"								
1,3-Dichloropropane	ND	0.462	"								
1,4-Dichlorobenzene	ND	0.601	"								
1,4-Dioxane	ND	0.721	"								
2,2,4-Trimethylpentane	ND	0.234	"								
2-Butanone	ND	0.295	"								
2-Hexanone	ND	0.819	"								
3-Chloropropene	ND	1.57	"								
4-Methyl-2-pentanone	ND	0.410	"								
Acetone	ND	1.90	"								
Acrylonitrile	ND	2.82	"								
Benzene	ND	0.319	"								
Benzyl chloride	ND	0.518	"								
Bromodichloromethane	ND	0.670	"								
Bromoform	ND	1.03	"								
Bromomethane	ND	0.388	"								
Carbon disulfide	ND	0.311	"								
Carbon tetrachloride	ND	0.157	"								
Chlorobenzene	ND	0.460	"								
Chloroethane	ND	0.264	"								
Chloroform	ND	0.488	"								
Chloromethane	ND	0.207	"								
cis-1,2-Dichloroethylene	ND	0.198	"								
cis-1,3-Dichloropropylene	ND	0.454	"								
Cyclohexane	ND	0.344	"								
Dibromochloromethane	ND	0.852	"								
Dichlorodifluoromethane	ND	0.495	"								
Ethyl acetate	ND	0.721	"								
Ethyl Benzene	ND	0.434	"								
Hexachlorobutadiene	ND	1.07	"								
Isopropanol	ND	1.47	"								
Methyl Methacrylate	ND	0.409	"								
Methyl tert-butyl ether (MTBE)	ND	0.361	"								
Methylene chloride	ND	2.08	"								
Naphthalene	ND	1.05	"								

Volatile Organic Compounds in Air by GC/MS - Quality Control Data

York Analytical Laboratories, Inc. - Stratford

Analyte	Result	Reporting Limit	Units	Spike Level	Source* Result	%REC	%REC Limits	Flag	RPD	RPD Limit	Flag
Batch BA50399 - EPA TO15 PREP											
Blank (BA50399-BLK1) Blank									Prepared: 01/06/2025 Analyzed: 01/07/2025		
n-Heptane	ND	0.410	ug/m³								
n-Hexane	ND	0.352	"								
o-Xylene	ND	0.434	"								
p- & m- Xylenes	ND	0.868	"								
p-Ethyltoluene	ND	0.492	"								
Propylene	ND	0.172	"								
Styrene	ND	0.426	"								
Tetrachloroethylene	ND	0.678	"								
Tetrahydrofuran	ND	0.590	"								
Toluene	ND	0.377	"								
trans-1,2-Dichloroethylene	ND	0.396	"								
trans-1,3-Dichloropropylene	ND	0.454	"								
Trichloroethylene	ND	0.134	"								
Trichlorofluoromethane (Freon 11)	ND	0.562	"								
Vinyl acetate	ND	0.352	"								
Vinyl bromide	ND	0.437	"								
Vinyl Chloride	ND	0.128	"								
LCS (BA50399-BS1) LCS									Prepared: 01/06/2025 Analyzed: 01/07/2025		
1,1,1,2-Tetrachloroethane	10.6		ppbv	10.0		106	70-130				
1,1,1-Trichloroethane	11.2		"	10.0		112	70-130				
1,1,2,2-Tetrachloroethane	11.5		"	10.0		115	70-130				
1,1,2-Trichloro-1,2,2-trifluoroethane (Freon 113)	11.1		"	10.0		111	70-130				
1,1,2-Trichloroethane	11.2		"	10.0		112	70-130				
1,1-Dichloroethane	10.8		"	10.0		108	70-130				
1,1-Dichloroethylene	11.6		"	10.0		116	70-130				
1,2,4-Trichlorobenzene	9.91		"	10.0		99.1	70-130				
1,2,4-Trimethylbenzene	12.0		"	10.0		120	70-130				
1,2-Dibromoethane	11.3		"	10.0		113	70-130				
1,2-Dichlorobenzene	11.8		"	10.0		118	70-130				
1,2-Dichloroethane	11.2		"	10.0		112	70-130				
1,2-Dichloropropane	11.2		"	10.0		112	70-130				
1,2-Dichlorotetrafluoroethane	10.1		"	10.0		101	70-130				
1,3,5-Trimethylbenzene	12.0		"	10.0		120	70-130				
1,3-Butadiene	11.5		"	10.0		115	70-130				
1,3-Dichlorobenzene	12.3		"	10.0		123	70-130				
1,3-Dichloropropane	11.4		"	10.0		114	70-130				
1,4-Dichlorobenzene	12.0		"	10.0		120	70-130				
1,4-Dioxane	10.7		"	10.0		107	70-130				
2,2,4-Trimethylpentane	12.4		"	10.0		124	70-130				
2-Butanone	11.0		"	10.0		110	70-130				
2-Hexanone	10.9		"	10.0		109	70-130				
3-Chloropropene	10.6		"	10.0		106	70-130				
4-Methyl-2-pentanone	10.9		"	10.0		109	70-130				
Acetone	9.68		"	10.0		96.8	70-130				
Acrylonitrile	10.9		"	10.0		109	70-130				
Benzene	10.8		"	10.0		108	70-130				
Benzyl chloride	11.5		"	10.0		115	70-130				
Bromodichloromethane	10.0		"	10.0		100	70-130				
Bromoform	9.65		"	10.0		96.5	70-130				
Bromomethane	11.0		"	10.0		110	70-130				

Volatile Organic Compounds in Air by GC/MS - Quality Control Data

York Analytical Laboratories, Inc. - Stratford

Analyte	Result	Reporting Limit	Units	Spike Level	Source* Result	%REC	%REC Limits	Flag	RPD	RPD Limit	Flag
Batch BA50399 - EPA TO15 PREP											
LCS (BA50399-BS1) LCS								Prepared: 01/06/2025 Analyzed: 01/07/2025			
Carbon disulfide	10.8		ppbv	10.0		108	70-130				
Carbon tetrachloride	9.60		"	10.0		96.0	70-130				
Chlorobenzene	10.9		"	10.0		109	70-130				
Chloroethane	11.0		"	10.0		110	70-130				
Chloroform	11.2		"	10.0		112	70-130				
Chloromethane	11.8		"	10.0		118	70-130				
cis-1,2-Dichloroethylene	10.5		"	10.0		105	70-130				
cis-1,3-Dichloropropylene	11.0		"	10.0		110	70-130				
Cyclohexane	11.7		"	10.0		117	70-130				
Dibromochloromethane	10.7		"	10.0		107	70-130				
Dichlorodifluoromethane	11.1		"	10.0		111	70-130				
Ethyl acetate	13.4		"	10.0		134	70-130	High Bias			
Ethyl Benzene	11.2		"	10.0		112	70-130				
Hexachlorobutadiene	9.11		"	10.0		91.1	70-130				
Isopropanol	9.54		"	10.0		95.4	70-130				
Methyl Methacrylate	10.8		"	10.0		108	70-130				
Methyl tert-butyl ether (MTBE)	11.0		"	10.0		110	70-130				
Methylene chloride	11.4		"	10.0		114	70-130				
Naphthalene	10.6		"	10.0		106	70-130				
n-Heptane	11.0		"	10.0		110	70-130				
n-Hexane	11.6		"	10.0		116	70-130				
o-Xylene	11.0		"	10.0		110	70-130				
p- & m- Xylenes	22.2		"	20.0		111	70-130				
p-Ethyltoluene	12.3		"	10.0		123	70-130				
Propylene	11.0		"	10.0		110	70-130				
Styrene	11.3		"	10.0		113	70-130				
Tetrachloroethylene	10.6		"	10.0		106	70-130				
Tetrahydrofuran	11.0		"	10.0		110	70-130				
Toluene	10.7		"	10.0		107	70-130				
trans-1,2-Dichloroethylene	11.5		"	10.0		115	70-130				
trans-1,3-Dichloropropylene	11.3		"	10.0		113	70-130				
Trichloroethylene	10.8		"	10.0		108	70-130				
Trichlorofluoromethane (Freon 11)	11.0		"	10.0		110	70-130				
Vinyl acetate	5.31		"	10.0		53.1	70-130	Low Bias			
Vinyl bromide	11.6		"	10.0		116	70-130				
Vinyl Chloride	12.3		"	10.0		123	70-130				

Volatile Organic Compounds in Air by GC/MS - Quality Control Data

York Analytical Laboratories, Inc. - Stratford

Analyte	Result	Reporting Limit	Units	Spike Level	Source* Result	%REC	%REC Limits	Flag	RPD	RPD Limit	Flag
Batch BA50493 - EPA TO15 PREP											
Blank (BA50493-BLK1) Blank									Prepared & Analyzed: 01/08/2025		
1,1,1,2-Tetrachloroethane	ND	0.687	ug/m³								
1,1,1-Trichloroethane	ND	0.546	"								
1,1,2,2-Tetrachloroethane	ND	0.687	"								
1,1,2-Trichloro-1,2,2-trifluoroethane (Freon 113)	ND	0.766	"								
1,1,2-Trichloroethane	ND	0.546	"								
1,1-Dichloroethane	ND	0.405	"								
1,1-Dichloroethylene	ND	0.198	"								
1,2,4-Trichlorobenzene	ND	0.742	"								
1,2,4-Trimethylbenzene	ND	0.492	"								
1,2-Dibromoethane	ND	0.768	"								
1,2-Dichlorobenzene	ND	0.601	"								
1,2-Dichloroethane	ND	0.405	"								
1,2-Dichloropropane	ND	0.462	"								
1,2-Dichlorotetrafluoroethane	ND	0.699	"								
1,3,5-Trimethylbenzene	ND	0.492	"								
1,3-Butadiene	ND	0.664	"								
1,3-Dichlorobenzene	ND	0.601	"								
1,3-Dichloropropane	ND	0.462	"								
1,4-Dichlorobenzene	ND	0.601	"								
1,4-Dioxane	ND	0.721	"								
2,2,4-Trimethylpentane	ND	0.234	"								
2-Butanone	ND	0.295	"								
2-Hexanone	ND	0.819	"								
3-Chloropropene	ND	1.57	"								
4-Methyl-2-pentanone	ND	0.410	"								
Acetone	ND	1.90	"								
Acrylonitrile	ND	2.82	"								
Benzene	ND	0.319	"								
Benzyl chloride	ND	0.518	"								
Bromodichloromethane	ND	0.670	"								
Bromoform	ND	1.03	"								
Bromomethane	ND	0.388	"								
Carbon disulfide	ND	0.311	"								
Carbon tetrachloride	ND	0.157	"								
Chlorobenzene	ND	0.460	"								
Chloroethane	ND	0.264	"								
Chloroform	ND	0.488	"								
Chloromethane	ND	0.207	"								
cis-1,2-Dichloroethylene	ND	0.198	"								
cis-1,3-Dichloropropylene	ND	0.454	"								
Cyclohexane	ND	0.344	"								
Dibromochloromethane	ND	0.852	"								
Dichlorodifluoromethane	ND	0.495	"								
Ethyl acetate	ND	0.721	"								
Ethyl Benzene	ND	0.434	"								
Hexachlorobutadiene	ND	1.07	"								
Isopropanol	ND	1.47	"								
Methyl Methacrylate	ND	0.409	"								
Methyl tert-butyl ether (MTBE)	ND	0.361	"								
Methylene chloride	ND	2.08	"								
Naphthalene	ND	1.05	"								

Volatile Organic Compounds in Air by GC/MS - Quality Control Data

York Analytical Laboratories, Inc. - Stratford

Analyte	Result	Reporting Limit	Units	Spike Level	Source* Result	%REC	%REC Limits	Flag	RPD	RPD Limit	Flag
Batch BA50493 - EPA TO15 PREP											
Blank (BA50493-BLK1) Blank									Prepared & Analyzed: 01/08/2025		
n-Heptane	ND	0.410	ug/m³								
n-Hexane	ND	0.352	"								
o-Xylene	ND	0.434	"								
p- & m- Xylenes	ND	0.868	"								
p-Ethyltoluene	ND	0.492	"								
Propylene	ND	0.172	"								
Styrene	ND	0.426	"								
Tetrachloroethylene	ND	0.678	"								
Tetrahydrofuran	ND	0.590	"								
Toluene	ND	0.377	"								
trans-1,2-Dichloroethylene	ND	0.396	"								
trans-1,3-Dichloropropylene	ND	0.454	"								
Trichloroethylene	ND	0.134	"								
Trichlorofluoromethane (Freon 11)	ND	0.562	"								
Vinyl acetate	ND	0.352	"								
Vinyl bromide	ND	0.437	"								
Vinyl Chloride	ND	0.128	"								
LCS (BA50493-BS1) LCS									Prepared & Analyzed: 01/08/2025		
1,1,1,2-Tetrachloroethane	10.4		ppbv	10.0		104	70-130				
1,1,1-Trichloroethane	11.1		"	10.0		111	70-130				
1,1,2,2-Tetrachloroethane	11.4		"	10.0		114	70-130				
1,1,2-Trichloro-1,2,2-trifluoroethane (Freon 113)	10.7		"	10.0		107	70-130				
1,1,2-Trichloroethane	11.0		"	10.0		110	70-130				
1,1-Dichloroethane	10.6		"	10.0		106	70-130				
1,1-Dichloroethylene	11.2		"	10.0		112	70-130				
1,2,4-Trichlorobenzene	9.45		"	10.0		94.5	70-130				
1,2,4-Trimethylbenzene	11.6		"	10.0		116	70-130				
1,2-Dibromoethane	11.0		"	10.0		110	70-130				
1,2-Dichlorobenzene	11.8		"	10.0		118	70-130				
1,2-Dichloroethane	11.1		"	10.0		111	70-130				
1,2-Dichloropropane	11.1		"	10.0		111	70-130				
1,2-Dichlorotetrafluoroethane	9.42		"	10.0		94.2	70-130				
1,3,5-Trimethylbenzene	11.5		"	10.0		115	70-130				
1,3-Butadiene	10.0		"	10.0		100	70-130				
1,3-Dichlorobenzene	12.0		"	10.0		120	70-130				
1,3-Dichloropropane	11.2		"	10.0		112	70-130				
1,4-Dichlorobenzene	11.8		"	10.0		118	70-130				
1,4-Dioxane	10.4		"	10.0		104	70-130				
2,2,4-Trimethylpentane	12.4		"	10.0		124	70-130				
2-Butanone	10.9		"	10.0		109	70-130				
2-Hexanone	10.7		"	10.0		107	70-130				
3-Chloropropene	10.7		"	10.0		107	70-130				
4-Methyl-2-pentanone	10.9		"	10.0		109	70-130				
Acetone	9.41		"	10.0		94.1	70-130				
Acrylonitrile	10.5		"	10.0		105	70-130				
Benzene	10.9		"	10.0		109	70-130				
Benzyl chloride	11.4		"	10.0		114	70-130				
Bromodichloromethane	10.1		"	10.0		101	70-130				
Bromoform	9.34		"	10.0		93.4	70-130				
Bromomethane	10.5		"	10.0		105	70-130				

Volatile Organic Compounds in Air by GC/MS - Quality Control Data

York Analytical Laboratories, Inc. - Stratford

Analyte	Result	Reporting Limit	Units	Spike Level	Source* Result	%REC	%REC Limits	Flag	RPD	RPD Limit	Flag
Batch BA50493 - EPA TO15 PREP											
LCS (BA50493-BS1) LCS							Prepared & Analyzed: 01/08/2025				
Carbon disulfide	10.5		ppbv	10.0		105	70-130				
Carbon tetrachloride	9.60		"	10.0		96.0	70-130				
Chlorobenzene	10.7		"	10.0		107	70-130				
Chloroethane	10.9		"	10.0		109	70-130				
Chloroform	11.2		"	10.0		112	70-130				
Chloromethane	10.0		"	10.0		100	70-130				
cis-1,2-Dichloroethylene	10.2		"	10.0		102	70-130				
cis-1,3-Dichloropropylene	10.9		"	10.0		109	70-130				
Cyclohexane	11.5		"	10.0		115	70-130				
Dibromochloromethane	10.5		"	10.0		105	70-130				
Dichlorodifluoromethane	10.8		"	10.0		108	70-130				
Ethyl acetate	13.2		"	10.0		132	70-130	High Bias			
Ethyl Benzene	11.2		"	10.0		112	70-130				
Hexachlorobutadiene	8.18		"	10.0		81.8	70-130				
Isopropanol	9.18		"	10.0		91.8	70-130				
Methyl Methacrylate	10.6		"	10.0		106	70-130				
Methyl tert-butyl ether (MTBE)	10.6		"	10.0		106	70-130				
Methylene chloride	11.0		"	10.0		110	70-130				
Naphthalene	10.7		"	10.0		107	70-130				
n-Heptane	11.0		"	10.0		110	70-130				
n-Hexane	11.5		"	10.0		115	70-130				
o-Xylene	11.0		"	10.0		110	70-130				
p- & m- Xylenes	21.9		"	20.0		109	70-130				
p-Ethyltoluene	11.6		"	10.0		116	70-130				
Propylene	10.5		"	10.0		105	70-130				
Styrene	11.3		"	10.0		113	70-130				
Tetrachloroethylene	10.4		"	10.0		104	70-130				
Tetrahydrofuran	11.0		"	10.0		110	70-130				
Toluene	10.3		"	10.0		103	70-130				
trans-1,2-Dichloroethylene	11.0		"	10.0		110	70-130				
trans-1,3-Dichloropropylene	11.0		"	10.0		110	70-130				
Trichloroethylene	10.7		"	10.0		107	70-130				
Trichlorofluoromethane (Freon 11)	10.6		"	10.0		106	70-130				
Vinyl acetate	5.05		"	10.0		50.5	70-130	Low Bias			
Vinyl bromide	11.3		"	10.0		113	70-130				
Vinyl Chloride	10.4		"	10.0		104	70-130				

Volatile Organic Compounds in Air by GC/MS - Quality Control Data

York Analytical Laboratories, Inc. - Stratford

Analyte	Result	Reporting Limit	Units	Spike Level	Source* Result	%REC	%REC Limits	Flag	RPD	RPD Limit	Flag
Batch BA50866 - EPA TO15 PREP											
Blank (BA50866-BLK1) Blank									Prepared & Analyzed: 01/14/2025		
1,1,1,2-Tetrachloroethane	ND	0.687	ug/m³								
1,1,1-Trichloroethane	ND	0.546	"								
1,1,2,2-Tetrachloroethane	ND	0.687	"								
1,1,2-Trichloro-1,2,2-trifluoroethane (Freon 113)	ND	0.766	"								
1,1,2-Trichloroethane	ND	0.546	"								
1,1-Dichloroethane	ND	0.405	"								
1,1-Dichloroethylene	ND	0.198	"								
1,2,4-Trichlorobenzene	ND	0.742	"								
1,2,4-Trimethylbenzene	ND	0.492	"								
1,2-Dibromoethane	ND	0.768	"								
1,2-Dichlorobenzene	ND	0.601	"								
1,2-Dichloroethane	ND	0.405	"								
1,2-Dichloropropane	ND	0.462	"								
1,2-Dichlorotetrafluoroethane	ND	0.699	"								
1,3,5-Trimethylbenzene	ND	0.492	"								
1,3-Butadiene	ND	0.664	"								
1,3-Dichlorobenzene	ND	0.601	"								
1,3-Dichloropropane	ND	0.462	"								
1,4-Dichlorobenzene	ND	0.601	"								
1,4-Dioxane	ND	0.721	"								
2,2,4-Trimethylpentane	ND	0.234	"								
2-Butanone	ND	0.295	"								
2-Hexanone	ND	0.819	"								
3-Chloropropene	ND	1.57	"								
4-Methyl-2-pentanone	ND	0.410	"								
Acetone	ND	1.90	"								
Acrylonitrile	ND	2.82	"								
Benzene	ND	0.319	"								
Benzyl chloride	ND	0.518	"								
Bromodichloromethane	ND	0.670	"								
Bromoform	ND	1.03	"								
Bromomethane	ND	0.388	"								
Carbon disulfide	ND	0.311	"								
Carbon tetrachloride	ND	0.157	"								
Chlorobenzene	ND	0.460	"								
Chloroethane	ND	0.264	"								
Chloroform	ND	0.488	"								
Chloromethane	ND	0.207	"								
cis-1,2-Dichloroethylene	ND	0.198	"								
cis-1,3-Dichloropropylene	ND	0.454	"								
Cyclohexane	ND	0.344	"								
Dibromochloromethane	ND	0.852	"								
Dichlorodifluoromethane	ND	0.495	"								
Ethyl acetate	ND	0.721	"								
Ethyl Benzene	ND	0.434	"								
Hexachlorobutadiene	ND	1.07	"								
Isopropanol	ND	1.47	"								
Methyl Methacrylate	ND	0.409	"								
Methyl tert-butyl ether (MTBE)	ND	0.361	"								
Methylene chloride	ND	2.08	"								
Naphthalene	ND	1.05	"								

Volatile Organic Compounds in Air by GC/MS - Quality Control Data

York Analytical Laboratories, Inc. - Stratford

Analyte	Result	Reporting Limit	Units	Spike Level	Source* Result	%REC	%REC Limits	Flag	RPD	RPD Limit	Flag
Batch BA50866 - EPA TO15 PREP											
Blank (BA50866-BLK1) Blank								Prepared & Analyzed: 01/14/2025			
n-Heptane	ND	0.410	ug/m³								
n-Hexane	ND	0.352	"								
o-Xylene	ND	0.434	"								
p- & m- Xylenes	ND	0.868	"								
p-Ethyltoluene	ND	0.492	"								
Propylene	ND	0.172	"								
Styrene	ND	0.426	"								
Tetrachloroethylene	ND	0.678	"								
Tetrahydrofuran	ND	0.590	"								
Toluene	ND	0.377	"								
trans-1,2-Dichloroethylene	ND	0.396	"								
trans-1,3-Dichloropropylene	ND	0.454	"								
Trichloroethylene	ND	0.134	"								
Trichlorofluoromethane (Freon 11)	ND	0.562	"								
Vinyl acetate	ND	0.352	"								
Vinyl bromide	ND	0.437	"								
Vinyl Chloride	ND	0.128	"								
LCS (BA50866-BS1) LCS								Prepared & Analyzed: 01/14/2025			
1,1,1,2-Tetrachloroethane	11.4		ppbv	10.0		114	70-130				
1,1,1-Trichloroethane	11.4		"	10.0		114	70-130				
1,1,2,2-Tetrachloroethane	11.9		"	10.0		119	70-130				
1,1,2-Trichloro-1,2,2-trifluoroethane (Freon 113)	11.3		"	10.0		113	70-130				
1,1,2-Trichloroethane	11.1		"	10.0		111	70-130				
1,1-Dichloroethane	11.0		"	10.0		110	70-130				
1,1-Dichloroethylene	11.5		"	10.0		115	70-130				
1,2,4-Trichlorobenzene	10.0		"	10.0		100	70-130				
1,2,4-Trimethylbenzene	11.9		"	10.0		119	70-130				
1,2-Dibromoethane	11.1		"	10.0		111	70-130				
1,2-Dichlorobenzene	12.0		"	10.0		120	70-130				
1,2-Dichloroethane	11.5		"	10.0		115	70-130				
1,2-Dichloropropane	10.9		"	10.0		109	70-130				
1,2-Dichlorotetrafluoroethane	10.5		"	10.0		105	70-130				
1,3,5-Trimethylbenzene	12.1		"	10.0		121	70-130				
1,3-Butadiene	11.9		"	10.0		119	70-130				
1,3-Dichlorobenzene	12.3		"	10.0		123	70-130				
1,3-Dichloropropane	11.0		"	10.0		110	70-130				
1,4-Dichlorobenzene	11.6		"	10.0		116	70-130				
1,4-Dioxane	10.7		"	10.0		107	70-130				
2,2,4-Trimethylpentane	12.6		"	10.0		126	70-130				
2-Butanone	11.2		"	10.0		112	70-130				
2-Hexanone	10.8		"	10.0		108	70-130				
3-Chloropropene	11.0		"	10.0		110	70-130				
4-Methyl-2-pentanone	11.0		"	10.0		110	70-130				
Acetone	9.46		"	10.0		94.6	70-130				
Acrylonitrile	11.0		"	10.0		110	70-130				
Benzene	11.2		"	10.0		112	70-130				
Benzyl chloride	11.6		"	10.0		116	70-130				
Bromodichloromethane	10.5		"	10.0		105	70-130				
Bromoform	11.9		"	10.0		119	70-130				
Bromomethane	15.9		"	10.0		159	70-130	High Bias			

Volatile Organic Compounds in Air by GC/MS - Quality Control Data

York Analytical Laboratories, Inc. - Stratford

Analyte	Result	Reporting Limit	Units	Spike Level	Source* Result	%REC	%REC Limits	Flag	RPD	RPD Limit	Flag
Batch BA50866 - EPA TO15 PREP											
LCS (BA50866-BS1) LCS							Prepared & Analyzed: 01/14/2025				
Carbon disulfide	11.0		ppbv	10.0		110	70-130				
Carbon tetrachloride	10.7		"	10.0		107	70-130				
Chlorobenzene	11.4		"	10.0		114	70-130				
Chloroethane	11.4		"	10.0		114	70-130				
Chloroform	11.5		"	10.0		115	70-130				
Chloromethane	11.9		"	10.0		119	70-130				
cis-1,2-Dichloroethylene	11.0		"	10.0		110	70-130				
cis-1,3-Dichloropropylene	10.8		"	10.0		108	70-130				
Cyclohexane	11.9		"	10.0		119	70-130				
Dibromochloromethane	10.8		"	10.0		108	70-130				
Dichlorodifluoromethane	11.3		"	10.0		113	70-130				
Ethyl acetate	13.7		"	10.0		137	70-130	High Bias			
Ethyl Benzene	11.5		"	10.0		115	70-130				
Hexachlorobutadiene	9.33		"	10.0		93.3	70-130				
Isopropanol	9.23		"	10.0		92.3	70-130				
Methyl Methacrylate	10.4		"	10.0		104	70-130				
Methyl tert-butyl ether (MTBE)	11.3		"	10.0		113	70-130				
Methylene chloride	11.6		"	10.0		116	70-130				
Naphthalene	11.2		"	10.0		112	70-130				
n-Heptane	11.2		"	10.0		112	70-130				
n-Hexane	11.8		"	10.0		118	70-130				
o-Xylene	11.9		"	10.0		119	70-130				
p- & m- Xylenes	23.0		"	20.0		115	70-130				
p-Ethyltoluene	12.6		"	10.0		126	70-130				
Propylene	11.0		"	10.0		110	70-130				
Styrene	12.1		"	10.0		121	70-130				
Tetrachloroethylene	10.7		"	10.0		107	70-130				
Tetrahydrofuran	11.2		"	10.0		112	70-130				
Toluene	10.7		"	10.0		107	70-130				
trans-1,2-Dichloroethylene	11.6		"	10.0		116	70-130				
trans-1,3-Dichloropropylene	11.1		"	10.0		111	70-130				
Trichloroethylene	10.6		"	10.0		106	70-130				
Trichlorofluoromethane (Freon 11)	11.3		"	10.0		113	70-130				
Vinyl acetate	5.27		"	10.0		52.7	70-130	Low Bias			
Vinyl bromide	11.9		"	10.0		119	70-130				
Vinyl Chloride	12.4		"	10.0		124	70-130				

Volatile Organic Compounds in Air by GC/MS - Quality Control Data

York Analytical Laboratories, Inc. - Stratford

Analyte	Result	Reporting Limit	Units	Spike Level	Source* Result	%REC	%REC Limits	Flag	RPD	RPD Limit	Flag
Batch BA51746 - EPA TO15 PREP											
Blank (BA51746-BLK1) Blank									Prepared & Analyzed: 01/28/2025		
1,1,1,2-Tetrachloroethane	ND	0.687	ug/m³								
1,1,1-Trichloroethane	ND	0.546	"								
1,1,2,2-Tetrachloroethane	ND	0.687	"								
1,1,2-Trichloro-1,2,2-trifluoroethane (Freon 113)	ND	0.766	"								
1,1,2-Trichloroethane	ND	0.546	"								
1,1-Dichloroethane	ND	0.405	"								
1,1-Dichloroethylene	ND	0.198	"								
1,2,4-Trichlorobenzene	ND	0.742	"								
1,2,4-Trimethylbenzene	ND	0.492	"								
1,2-Dibromoethane	ND	0.768	"								
1,2-Dichlorobenzene	ND	0.601	"								
1,2-Dichloroethane	ND	0.405	"								
1,2-Dichloropropane	ND	0.462	"								
1,2-Dichlorotetrafluoroethane	ND	0.699	"								
1,3,5-Trimethylbenzene	ND	0.492	"								
1,3-Butadiene	ND	0.664	"								
1,3-Dichlorobenzene	ND	0.601	"								
1,3-Dichloropropane	ND	0.462	"								
1,4-Dichlorobenzene	ND	0.601	"								
1,4-Dioxane	ND	0.721	"								
2,2,4-Trimethylpentane	ND	0.234	"								
2-Butanone	ND	0.295	"								
2-Hexanone	ND	0.819	"								
3-Chloropropene	ND	1.57	"								
4-Methyl-2-pentanone	ND	0.410	"								
Acetone	ND	1.90	"								
Acrylonitrile	ND	2.82	"								
Benzene	ND	0.319	"								
Benzyl chloride	ND	0.518	"								
Bromodichloromethane	ND	0.670	"								
Bromoform	ND	1.03	"								
Bromomethane	ND	0.388	"								
Carbon disulfide	ND	0.311	"								
Carbon tetrachloride	ND	0.157	"								
Chlorobenzene	ND	0.460	"								
Chloroethane	ND	0.264	"								
Chloroform	ND	0.488	"								
Chloromethane	ND	0.207	"								
cis-1,2-Dichloroethylene	ND	0.198	"								
cis-1,3-Dichloropropylene	ND	0.454	"								
Cyclohexane	ND	0.344	"								
Dibromochloromethane	ND	0.852	"								
Dichlorodifluoromethane	ND	0.495	"								
Ethyl acetate	ND	0.721	"								
Ethyl Benzene	ND	0.434	"								
Hexachlorobutadiene	ND	1.07	"								
Isopropanol	ND	1.47	"								
Methyl Methacrylate	ND	0.409	"								
Methyl tert-butyl ether (MTBE)	ND	0.361	"								
Methylene chloride	ND	2.08	"								
Naphthalene	ND	1.05	"								

Volatile Organic Compounds in Air by GC/MS - Quality Control Data

York Analytical Laboratories, Inc. - Stratford

Analyte	Result	Reporting Limit	Units	Spike Level	Source* Result	%REC	%REC Limits	Flag	RPD	RPD Limit	Flag
Batch BA51746 - EPA TO15 PREP											
Blank (BA51746-BLK1) Blank								Prepared & Analyzed: 01/28/2025			
n-Heptane	ND	0.410	ug/m³								
n-Hexane	ND	0.352	"								
o-Xylene	ND	0.434	"								
p- & m- Xylenes	ND	0.868	"								
p-Ethyltoluene	ND	0.492	"								
Propylene	ND	0.172	"								
Styrene	ND	0.426	"								
Tetrachloroethylene	ND	0.678	"								
Tetrahydrofuran	ND	0.590	"								
Toluene	ND	0.377	"								
trans-1,2-Dichloroethylene	ND	0.396	"								
trans-1,3-Dichloropropylene	ND	0.454	"								
Trichloroethylene	ND	0.134	"								
Trichlorofluoromethane (Freon 11)	ND	0.562	"								
Vinyl acetate	ND	0.352	"								
Vinyl bromide	ND	0.437	"								
Vinyl Chloride	ND	0.128	"								
LCS (BA51746-BS1) LCS								Prepared & Analyzed: 01/28/2025			
1,1,1,2-Tetrachloroethane	11.4		ppbv	10.0		114	70-130				
1,1,1-Trichloroethane	9.41		"	10.0		94.1	70-130				
1,1,2,2-Tetrachloroethane	12.7		"	10.0		127	70-130				
1,1,2-Trichloro-1,2,2-trifluoroethane (Freon 113)	9.66		"	10.0		96.6	70-130				
1,1,2-Trichloroethane	12.0		"	10.0		120	70-130				
1,1-Dichloroethane	9.34		"	10.0		93.4	70-130				
1,1-Dichloroethylene	10.1		"	10.0		101	70-130				
1,2,4-Trichlorobenzene	10.6		"	10.0		106	70-130				
1,2,4-Trimethylbenzene	12.7		"	10.0		127	70-130				
1,2-Dibromoethane	12.0		"	10.0		120	70-130				
1,2-Dichlorobenzene	12.6		"	10.0		126	70-130				
1,2-Dichloroethane	9.69		"	10.0		96.9	70-130				
1,2-Dichloropropane	12.0		"	10.0		120	70-130				
1,2-Dichlorotetrafluoroethane	8.41		"	10.0		84.1	70-130				
1,3,5-Trimethylbenzene	11.4		"	10.0		114	70-130				
1,3-Butadiene	9.43		"	10.0		94.3	70-130				
1,3-Dichlorobenzene	13.2		"	10.0		132	70-130	High Bias			
1,3-Dichloropropane	11.7		"	10.0		117	70-130				
1,4-Dichlorobenzene	12.7		"	10.0		127	70-130				
1,4-Dioxane	11.1		"	10.0		111	70-130				
2,2,4-Trimethylpentane	10.3		"	10.0		103	70-130				
2-Butanone	9.52		"	10.0		95.2	70-130				
2-Hexanone	11.9		"	10.0		119	70-130				
3-Chloropropene	9.06		"	10.0		90.6	70-130				
4-Methyl-2-pentanone	11.5		"	10.0		115	70-130				
Acetone	8.20		"	10.0		82.0	70-130				
Acrylonitrile	9.22		"	10.0		92.2	70-130				
Benzene	9.32		"	10.0		93.2	70-130				
Benzyl chloride	12.7		"	10.0		127	70-130				
Bromodichloromethane	11.1		"	10.0		111	70-130				
Bromoform	11.9		"	10.0		119	70-130				
Bromomethane	9.44		"	10.0		94.4	70-130				

Volatile Organic Compounds in Air by GC/MS - Quality Control Data

York Analytical Laboratories, Inc. - Stratford

Analyte	Result	Reporting Limit	Units	Spike Level	Source* Result	%REC	%REC Limits	Flag	RPD	RPD Limit	Flag
Batch BA51746 - EPA TO15 PREP											
LCS (BA51746-BS1) LCS								Prepared & Analyzed: 01/28/2025			
Carbon disulfide	9.31		ppbv	10.0		93.1	70-130				
Carbon tetrachloride	7.90		"	10.0		79.0	70-130				
Chlorobenzene	11.6		"	10.0		116	70-130				
Chloroethane	9.22		"	10.0		92.2	70-130				
Chloroform	9.64		"	10.0		96.4	70-130				
Chloromethane	9.54		"	10.0		95.4	70-130				
cis-1,2-Dichloroethylene	9.10		"	10.0		91.0	70-130				
cis-1,3-Dichloropropylene	11.8		"	10.0		118	70-130				
Cyclohexane	9.55		"	10.0		95.5	70-130				
Dibromochloromethane	11.5		"	10.0		115	70-130				
Dichlorodifluoromethane	9.68		"	10.0		96.8	70-130				
Ethyl acetate	11.6		"	10.0		116	70-130				
Ethyl Benzene	11.9		"	10.0		119	70-130				
Hexachlorobutadiene	9.03		"	10.0		90.3	70-130				
Isopropanol	8.09		"	10.0		80.9	70-130				
Methyl Methacrylate	11.0		"	10.0		110	70-130				
Methyl tert-butyl ether (MTBE)	9.16		"	10.0		91.6	70-130				
Methylene chloride	9.69		"	10.0		96.9	70-130				
Naphthalene	12.0		"	10.0		120	70-130				
n-Heptane	9.51		"	10.0		95.1	70-130				
n-Hexane	9.53		"	10.0		95.3	70-130				
o-Xylene	12.1		"	10.0		121	70-130				
p- & m- Xylenes	23.3		"	20.0		116	70-130				
p-Ethyltoluene	12.2		"	10.0		122	70-130				
Propylene	9.39		"	10.0		93.9	70-130				
Styrene	12.3		"	10.0		123	70-130				
Tetrachloroethylene	11.4		"	10.0		114	70-130				
Tetrahydrofuran	9.49		"	10.0		94.9	70-130				
Toluene	10.9		"	10.0		109	70-130				
trans-1,2-Dichloroethylene	9.82		"	10.0		98.2	70-130				
trans-1,3-Dichloropropylene	12.0		"	10.0		120	70-130				
Trichloroethylene	11.4		"	10.0		114	70-130				
Trichlorofluoromethane (Freon 11)	9.61		"	10.0		96.1	70-130				
Vinyl acetate	4.32		"	10.0		43.2	70-130	Low Bias			
Vinyl bromide	9.96		"	10.0		99.6	70-130				
Vinyl Chloride	9.89		"	10.0		98.9	70-130				

Volatile Organic Compounds in Air by GC/MS - Quality Control Data

York Analytical Laboratories, Inc. - Stratford

Analyte	Result	Reporting Limit	Units	Spike Level	Source* Result	%REC	%REC Limits	Flag	RPD	RPD Limit	Flag
Batch BA51746 - EPA TO15 PREP											
Duplicate (BA51746-DUP1) Duplicate	*Source sample: 25A1549-05 (AA01_012825)								Prepared & Analyzed: 01/28/2025		
1,1,1,2-Tetrachloroethane	ND	0.557	ug/m³		ND					25	
1,1,1-Trichloroethane	ND	0.443	"		ND					25	
1,1,2,2-Tetrachloroethane	ND	0.557	"		ND					25	
1,1,2-Trichloro-1,2,2-trifluoroethane (Freon 113)	ND	0.622	"		ND					25	
1,1,2-Trichloroethane	ND	0.443	"		ND					25	
1,1-Dichloroethane	ND	0.328	"		ND					25	
1,1-Dichloroethylene	ND	0.161	"		ND					25	
1,2,4-Trichlorobenzene	ND	0.602	"		ND					25	
1,2,4-Trimethylbenzene	0.478	0.399	"		0.518				8.00	25	
1,2-Dibromoethane	ND	0.623	"		ND					25	
1,2-Dichlorobenzene	ND	0.488	"		ND					25	
1,2-Dichloroethane	ND	0.328	"		ND					25	
1,2-Dichloropropane	ND	0.375	"		ND					25	
1,2-Dichlorotetrafluoroethane	ND	0.567	"		ND					25	
1,3,5-Trimethylbenzene	ND	0.399	"		ND					25	
1,3-Butadiene	ND	0.538	"		ND					25	
1,3-Dichlorobenzene	ND	0.488	"		ND					25	
1,3-Dichloropropane	ND	0.375	"		ND					25	
1,4-Dichlorobenzene	ND	0.488	"		ND					25	
1,4-Dioxane	ND	0.584	"		ND					25	
2,2,4-Trimethylpentane	1.14	0.189	"		1.14				0.00	25	
2-Butanone	0.574	0.239	"		0.598				4.08	25	
2-Hexanone	ND	0.664	"		ND					25	
3-Chloropropene	ND	1.27	"		ND					25	
4-Methyl-2-pentanone	ND	0.332	"		ND					25	
Acetone	3.64	1.54	"		3.62				0.531	25	
Acrylonitrile	ND	2.29	"		ND					25	
Benzene	0.985	0.259	"		0.985				0.00	25	
Benzyl chloride	ND	0.420	"		ND					25	
Bromodichloromethane	ND	0.543	"		ND					25	
Bromoform	ND	0.838	"		ND					25	
Bromomethane	ND	0.315	"		ND					25	
Carbon disulfide	ND	0.253	"		ND					25	
Carbon tetrachloride	0.306	0.128	"		0.306				0.00	25	
Chlorobenzene	ND	0.373	"		ND					25	
Chloroethane	ND	0.214	"		ND					25	
Chloroform	ND	0.396	"		ND					25	
Chloromethane	1.31	0.167	"		1.36				3.77	25	
cis-1,2-Dichloroethylene	ND	0.161	"		ND					25	
cis-1,3-Dichloropropylene	ND	0.368	"		ND					25	
Cyclohexane	ND	0.279	"		ND					25	
Dibromochloromethane	ND	0.691	"		ND					25	
Dichlorodifluoromethane	2.21	0.401	"		2.13				3.70	25	
Ethyl acetate	0.438	0.584	"		0.438				0.00	25	
Ethyl Benzene	0.775	0.352	"		0.704				9.52	25	
Hexachlorobutadiene	ND	0.865	"		ND					25	
Isopropanol	0.738	1.20	"		0.758				2.67	25	
Methyl Methacrylate	0.432	0.332	"		0.432				0.00	25	
Methyl tert-butyl ether (MTBE)	ND	0.292	"		ND					25	
Methylene chloride	0.789	1.69	"		0.761				3.64	25	
Naphthalene	0.510	0.850	"		0.468				8.70	25	

Volatile Organic Compounds in Air by GC/MS - Quality Control Data

York Analytical Laboratories, Inc. - Stratford

Analyte	Result	Reporting Limit	Units	Spike Level	Source* Result	%REC	%REC Limits	Flag	RPD	RPD Limit	Flag
Batch BA51746 - EPA TO15 PREP											
Duplicate (BA51746-DUP1) Duplicate	*Source sample: 25A1549-05 (AA01_012825)								Prepared & Analyzed: 01/28/2025		
n-Heptane	0.432	0.332	ug/m³		0.465				7.41	25	
n-Hexane	0.829	0.286	"		0.829				0.00	25	
o-Xylene	0.669	0.352	"		0.669				0.00	25	
p- & m- Xylenes	1.76	0.704	"		1.66				6.19	25	
p-Ethyltoluene	0.478	0.399	"		0.439				8.70	25	
Propylene	1.42	0.140	"		1.41				0.985	25	
Styrene	ND	0.345	"		ND					25	
Tetrachloroethylene	ND	0.550	"		ND					25	
Tetrahydrofuran	0.263	0.478	"		ND					25	
Toluene	3.39	0.306	"		3.30				2.74	25	
trans-1,2-Dichloroethylene	ND	0.322	"		ND					25	
trans-1,3-Dichloropropylene	ND	0.368	"		ND					25	
Trichloroethylene	ND	0.109	"		ND					25	
Trichlorofluoromethane (Freon 11)	1.09	0.456	"		1.14				4.08	25	
Vinyl acetate	ND	0.286	"		ND					25	
Vinyl bromide	ND	0.355	"		ND					25	
Vinyl Chloride	ND	0.104	"		ND					25	

Sample and Data Qualifiers Relating to This Work Order

TO-LCS-L	The result reported for this compound may be biased low due to its behavior in the analysis batch LCS where it recovered less 70% of the expected value.
ICVE	The value reported is ESTIMATED. The value is estimated due to its behavior during initial calibration verification (recovery exceeded 30% of expected value).
B	Analyte is found in the associated analysis batch blank. For volatiles, methylene chloride and acetone are common lab contaminants.

Definitions and Other Explanations

*	Analyte is not certified or the state of the samples origination does not offer certification for the Analyte.
ND	NOT DETECTED - the analyte is not detected at the Reported to level (LOQ/RL or LOD/MDL)
RL	REPORTING LIMIT - the minimum reportable value based upon the lowest point in the analyte calibration curve.
LOQ	LIMIT OF QUANTITATION - the minimum concentration of a target analyte that can be reported within a specified degree of confidence. This is the lowest point in an analyte calibration curve that has been subjected to all steps of the processing/analysis and verified to meet defined criteria. This is based upon NELAC 2009 Standards and applies to all analyses.
LOD	LIMIT OF DETECTION - a verified estimate of the minimum concentration of a substance in a given matrix that an analytical process can reliably detect. This is based upon NELAC 2009 Standards and applies to all analyses conducted under the auspices of EPA SW-846.
MDL	METHOD DETECTION LIMIT - a statistically derived estimate of the minimum amount of a substance an analytical system can reliably detect with a 99% confidence that the concentration of the substance is greater than zero. This is based upon 40 CFR Part 136 Appendix B and applies only to EPA 600 and 200 series methods.
Reported to	This indicates that the data for a particular analysis is reported to either the LOD/MDL, or the LOQ/RL. In cases where the "Reported to" is located above the LOD/MDL, any value between this and the LOQ represents an estimated value which is "J" flagged accordingly. This applies to volatile and semi-volatile target compounds only.
NR	Not reported
RPD	Relative Percent Difference
Wet	The data has been reported on an as-received (wet weight) basis
Low Bias	Low Bias flag indicates that the recovery of the flagged analyte is below the laboratory or regulatory lower control limit. The data user should take note that this analyte may be biased low but should evaluate multiple lines of evidence including the LCS and site-specific MS/MSD data to draw bias conclusions. In cases where no site-specific MS/MSD was requested, only the LCS data can be used to evaluate such bias.
High Bias	High Bias flag indicates that the recovery of the flagged analyte is above the laboratory or regulatory upper control limit. The data user should take note that this analyte may be biased high but should evaluate multiple lines of evidence including the LCS and site-specific MS/MSD data to draw bias conclusions. In cases where no site-specific MS/MSD was requested, only the LCS data can be used to evaluate such bias.
Non-Dir.	Non-dir. flag (Non-Directional Bias) indicates that the Relative Percent Difference (RPD) (a measure of precision) among the MS and MSD data is outside the laboratory or regulatory control limit. This alerts the data user where the MS and MSD are from site-specific samples that the RPD is high due to either non-homogeneous distribution of target analyte between the MS/MSD or indicates poor reproducibility for other reasons.

If EPA SW-846 method 8270 is included herein it is noted that the target compound N-nitrosodiphenylamine (NDPA) decomposes in the gas chromatographic inlet and cannot be separated from diphenylamine (DPA). These results could actually represent 100% DPA, 100% NDPA or some combination of the two. For this reason, York reports the combined result for n-nitrosodiphenylamine and diphenylamine for either of these compounds as a combined concentration as Diphenylamine.

If Total PCBs are detected and the target aroclors reported are "Not detected", the Total PCB value is reported due to the presence of either or both Aroclors 1262 and 1268 which are non-target aroclors for some regulatory lists.

2-chloroethylvinyl ether readily breaks down under acidic conditions. Samples that are acid preserved, including standards will exhibit breakdown. The data user should take note.

Certification for pH is no longer offered by NYDOH ELAP.

Semi-Volatile and Volatile analyses are reported down to the LOD/MDL, with values between the LOD/MDL and the LOQ being "J" flagged as estimated results.

For analyses by EPA SW-846-8270D, the Limit of Quantitation (LOQ) reported for benzidine is based upon the lowest standard used for calibration and is not a verified LOQ due to this compound's propensity for oxidative losses during extraction/concentration procedures and non-reproducible chromatographic performance.

York Analytical Laboratories, Inc.
120 Research Drive, Stratford, CT 06615 | 132-02 89th Ave Queens, NY 11418
clientservices@yorklab.com
www.yorklab.com

Field Chain-of-Custody Record - AIR

NOTE: YORK's Standard Terms & Conditions are listed on the back side of this document. This document serves as your written authorization for YORK to proceed with the analyses requested below. Your signature binds you to YORK's Standard Terms & Conditions.

YORK Project No. 25A1549

YOUR Information	Report To:	Invoice To:	YOUR Project Number	Turn-Around Time
Company: Langan DPC	Company:	Company:	170361307	RUSH - Next Day X
Address: 368 Ninth Avenue New York, NY	Address:	Address:	YOUR Project Name: 514 Union Street	RUSH - Two Day
Phone.: 212-479-5400	Phone.:	Phone.:		RUSH - Three Day
Contact: Vinicius De Paula	Contact:	Contact:		RUSH - Four Day
E-mail: vdepaula@langan.com	E-mail:	E-mail:	YOUR PO#:	Standard (5-7 Day)

Please print clearly and legibly. All information must be complete. Samples will not be logged in and the turn-around-time clock will not begin until any questions by YORK are resolved.

Samples Collected by: (print your name above and sign below)

Caroline Devin

Air Matrix Codes

AI - Indoor Ambient Air
AO - Outdoor Amb. Air
AE - Vapor Extraction Well/ Process Gas/Effluent
AS - Soil Vapor/Sub-Slab

Samples From

New York X
New Jersey
Connecticut
Pennsylvania
Other

Report / EDD Type (circle selections)

Summary Report | CT RCP | Standard Excel EDD
QA Report | CT RCP DQA/DUE | EQuIS (Standard)
NY ASP A Package | NJDEP Reduced Deliv. | NYSDEC EQuIS
(NY ASP B Package) | NJDKQP | NJDEP SRP HazSite
Other:

YORK Reg. Comp.

Compared to the following Regulation(s): (please fill in)

Certified Canisters: Batch ___ Individual X

Please enter the following REQUIRED Field Data

Reporting Units: ug/m³ ___ ppbv ___ ppmv ___

Sample Identification	Date/Time Sampled	Air Matrix	Canister Vacuum Before Sampling (in Hg)	Canister Vacuum After Sampling (in Hg)	Canister ID	Flow Cont. ID	Analysis Requested
IA01-012825	1/28/25/0851	AI	-28	-6	28844	21023	[TO-15 VOCs]
IA02-012825	/0852	"	-30	-6	48288	21021	"
IA03-012825	/0744	"	-30	-5	28850	19428	"
IA04-012825	/0745	"	-27	-5	20944	19407	"
AA01-012825	/0850	AO	-28	-6	41939	19381	"

Comments: include: datamanagement@langan.com; cdevin@langan.com; bloontz@langan.com; pmcmanon@langan.com; janayes@langan.com; mburke@langan.com

Detection Limits Required

≤ 1 ug/m³ ___ NYSDEC V1 Limits ___
Routine Survey ___ Other ___

Sampling Media

6 Liter Canister
Tedlar Bag

Samples Relinquished by / Company	Date/Time	Samples Received by / Company	Date/Time	Samples Relinquished by / Company	Date/Time
Caroline Devin / Langan	1/28/25/		1-28-25 9:10AM		1-28-25 10:09
Samples Received by / Company	**Date/Time**	**Samples Relinquished by / Company**	**Date/Time**	**Samples Received by / Company**	**Date/Time**
Samples Relinquished by / Company	**Date/Time**	**Samples Received by / Company**	**Date/Time**	**Samples Received in LAB by**	**Date/Time**
				1/28/25	10:09

Technical Report

prepared for:

Langan Engineering & Environmental Services (NYC)
21 Penn Plaza, 360 West 31st Street
New York NY, 10001
Attention: Vinicius DePaula

Report Date: 03/21/2025
Client Project ID: 170361307
York Project (SDG) No.: 25C1102

Report Date: 03/21/2025
Client Project ID: 170361307
York Project (SDG) No.: 25C1102

Langan Engineering & Environmental Services (NYC)
21 Penn Plaza, 360 West 31st Street
New York NY, 10001
Attention: Vinicius DePaula

Purpose and Results

This report contains the analytical data for the sample(s) identified on the attached chain-of-custody received in our laboratory on March 18, 2025 and listed below. The project was identified as your project: **170361307**.

The analyses were conducted utilizing appropriate EPA, Standard Methods, and ASTM methods as detailed in the data summary tables.

All samples were received in proper condition meeting the customary acceptance requirements for environmental samples except those indicated under the Sample and Analysis Qualifiers section of this report.

All analyses met the method and laboratory standard operating procedure requirements except as indicated by any data flags, the meaning of which are explained in the Sample and Data Qualifiers Relating to This Work Order section of this report and case narrative if applicable.

The results of the analyses, which are all reported on dry weight basis (soils) unless otherwise noted, are detailed in the following pages.

Please contact Client Services at 203.325.1371 with any questions regarding this report.

York Sample ID	Client Sample ID	Matrix	Date Collected	Date Received
25C1102-01	CAN 49577 / FC 20932	Air	03/14/2025	03/18/2025
25C1102-02	CAN 51008 / FC 19431	Air	03/13/2025	03/18/2025
25C1102-04	CAN 49976 / FC 19415	Air	03/08/2025	03/18/2025
25C1102-05	CAN 49998 / FC 20927	Air	03/14/2025	03/18/2025
25C1102-06	CAN 34501 / FC 17190	Air	03/13/2025	03/18/2025
25C1275-01	IA01_032025	Indoor Ambient Air	03/20/2025	03/20/2025
25C1275-02	IA02_032025	Indoor Ambient Air	03/20/2025	03/20/2025
25C1275-03	IA03_032025	Indoor Ambient Air	03/20/2025	03/20/2025
25C1275-04	IA04_032025	Indoor Ambient Air	03/20/2025	03/20/2025
25C1275-05	AA01_032025	Outdoor Ambient Ai	03/20/2025	03/20/2025

General Notes for York Project (SDG) No.: 25C1102

1. The RLs and MDLs (Reporting Limit and Method Detection Limit respectively) reported are adjusted for any dilution necessary due to the levels of target and/or non-target analytes and matrix interference. The RL(REPORTING LIMIT) is based upon the lowest standard utilized for the calibration where applicable.
2. Samples are retained for a period of thirty days after submittal of report, unless other arrangements are made.
3. York's liability for the above data is limited to the dollar value paid to York for the referenced project.
4. This report shall not be reproduced without the written approval of York Analytical Laboratories, Inc.
5. All analyses conducted met method or Laboratory SOP requirements. See the Sample and Data Qualifiers Section for further information.
6. It is noted that no analyses reported herein were subcontracted to another laboratory, unless noted in the report.
7. This report reflects results that relate only to the samples submitted on the attached chain-of-custody form(s) received by York.
8. Analyses conducted at York Analytical Laboratories, Inc. Stratford, CT are indicated by NY Cert. No. 10854; those conducted at York Analytical Laboratories, Inc., Richmond Hill, NY are indicated by NY Cert. No. 12058.

Approved By  **Date:** 03/21/2025

Cassie L. Mosher
Laboratory Manager

Sample Information

Client Sample ID: CAN 49577 / FC 20932 **York Sample ID:** 25C1102-01

York Project (SDG) No.	Client Project ID	Matrix	Collection Date/Time	Date Received
25C1102	170361307	Air	March 14, 2025 3:03 pm	03/18/2025

Volatile Organics, EPA TO15 Full List

Log-in Notes:

Sample Notes:

Sample Prepared by Method: EPA TO15 PREP

CAS No.	Parameter	Result	Flag	Units	Reported to LOD/MDL	LOQ	Dilution	Reference Method	Date/Time Prepared	Date/Time Analyzed	Analyst
630-20-6	* 1,1,1,2-Tetrachloroethane	ND		ug/m³	0.69	0.69	1	EPA TO-15	03/15/2025 06:10	03/15/2025 17:24	YR
								Certifications:			
71-55-6	1,1,1-Trichloroethane	ND		ug/m³	0.55	0.55	1	EPA TO-15	03/15/2025 06:10	03/15/2025 17:24	YR
								Certifications:	NELAC-NY12058,NJDEP-NY037		
79-34-5	1,1,2,2-Tetrachloroethane	ND		ug/m³	0.69	0.69	1	EPA TO-15	03/15/2025 06:10	03/15/2025 17:24	YR
								Certifications:	NELAC-NY12058,NJDEP-NY037		
76-13-1	1,1,2-Trichloro-1,2,2-trifluoroethane (Freon 113)	ND		ug/m³	0.77	0.77	1	EPA TO-15	03/15/2025 06:10	03/15/2025 17:24	YR
								Certifications:	NELAC-NY12058,NJDEP-NY037		
79-00-5	1,1,2-Trichloroethane	ND		ug/m³	0.55	0.55	1	EPA TO-15	03/15/2025 06:10	03/15/2025 17:24	YR
								Certifications:	NELAC-NY12058,NJDEP-NY037		
75-34-3	1,1-Dichloroethane	ND		ug/m³	0.40	0.40	1	EPA TO-15	03/15/2025 06:10	03/15/2025 17:24	YR
								Certifications:	NELAC-NY12058,NJDEP-NY037		
75-35-4	1,1-Dichloroethylene	ND		ug/m³	0.099	0.099	1	EPA TO-15	03/15/2025 06:10	03/15/2025 17:24	YR
								Certifications:	NELAC-NY12058,NJDEP-NY037		
120-82-1	1,2,4-Trichlorobenzene	ND		ug/m³	0.74	0.74	1	EPA TO-15	03/15/2025 06:10	03/15/2025 17:24	YR
								Certifications:	NELAC-NY12058,NJDEP-NY037		
95-63-6	1,2,4-Trimethylbenzene	ND		ug/m³	0.49	0.49	1	EPA TO-15	03/15/2025 06:10	03/15/2025 17:24	YR
								Certifications:	NELAC-NY12058,NJDEP-NY037		
106-93-4	1,2-Dibromoethane	ND		ug/m³	0.77	0.77	1	EPA TO-15	03/15/2025 06:10	03/15/2025 17:24	YR
								Certifications:	NELAC-NY12058,NJDEP-NY037		
95-50-1	1,2-Dichlorobenzene	ND		ug/m³	0.60	0.60	1	EPA TO-15	03/15/2025 06:10	03/15/2025 17:24	YR
								Certifications:	NELAC-NY12058,NJDEP-NY037		
107-06-2	1,2-Dichloroethane	ND		ug/m³	0.40	0.40	1	EPA TO-15	03/15/2025 06:10	03/15/2025 17:24	YR
								Certifications:	NELAC-NY12058,NJDEP-NY037		
78-87-5	1,2-Dichloropropane	ND		ug/m³	0.46	0.46	1	EPA TO-15	03/15/2025 06:10	03/15/2025 17:24	YR
								Certifications:	NELAC-NY12058,NJDEP-NY037		
76-14-2	1,2-Dichlorotetrafluoroethane	ND		ug/m³	0.70	0.70	1	EPA TO-15	03/15/2025 06:10	03/15/2025 17:24	YR
								Certifications:	NELAC-NY12058,NJDEP-NY037		
108-67-8	1,3,5-Trimethylbenzene	ND		ug/m³	0.49	0.49	1	EPA TO-15	03/15/2025 06:10	03/15/2025 17:24	YR
								Certifications:	NELAC-NY12058,NJDEP-NY037		
106-99-0	1,3-Butadiene	ND		ug/m³	0.66	0.66	1	EPA TO-15	03/15/2025 06:10	03/15/2025 17:24	YR
								Certifications:	NELAC-NY12058,NJDEP-NY037		
541-73-1	1,3-Dichlorobenzene	ND		ug/m³	0.60	0.60	1	EPA TO-15	03/15/2025 06:10	03/15/2025 17:24	YR
								Certifications:	NELAC-NY12058,NJDEP-NY037		
142-28-9	* 1,3-Dichloropropane	ND		ug/m³	0.46	0.46	1	EPA TO-15	03/15/2025 06:10	03/15/2025 17:24	YR
								Certifications:			
106-46-7	1,4-Dichlorobenzene	ND		ug/m³	0.60	0.60	1	EPA TO-15	03/15/2025 06:10	03/15/2025 17:24	YR
								Certifications:	NELAC-NY12058,NJDEP-NY037		
123-91-1	1,4-Dioxane	ND		ug/m³	0.72	0.72	1	EPA TO-15	03/15/2025 06:10	03/15/2025 17:24	YR
								Certifications:	NELAC-NY12058,NJDEP-NY037		
540-84-1	* 2,2,4-Trimethylpentane	ND		ug/m³	0.12	0.23	1	EPA TO-15	03/15/2025 06:10	03/15/2025 17:24	YR
								Certifications:			

Sample Information

Client Sample ID: CAN 49577 / FC 20932 **York Sample ID:** 25C1102-01

York Project (SDG) No.	Client Project ID	Matrix	Collection Date/Time	Date Received
25C1102	170361307	Air	March 14, 2025 3:03 pm	03/18/2025

Volatile Organics, EPA TO15 Full List **Log-in Notes:** **Sample Notes:**

Sample Prepared by Method: EPA TO15 PREP

CAS No.	Parameter	Result	Flag	Units	Reported to LOD/MDL	LOQ	Dilution	Reference Method	Date/Time Prepared	Date/Time Analyzed	Analyst
78-93-3	2-Butanone	ND		ug/m³	0.29	0.29	1	EPA TO-15	03/15/2025 06:10	03/15/2025 17:24	YR
								Certifications:	NELAC-NY12058,NJDEP-NY037		
591-78-6	* 2-Hexanone	ND		ug/m³	0.82	0.82	1	EPA TO-15	03/15/2025 06:10	03/15/2025 17:24	YR
								Certifications:			
107-05-1	3-Chloropropene	ND		ug/m³	1.6	1.6	1	EPA TO-15	03/15/2025 06:10	03/15/2025 17:24	YR
								Certifications:	NELAC-NY12058,NJDEP-NY037		
108-10-1	4-Methyl-2-pentanone	ND		ug/m³	0.41	0.41	1	EPA TO-15	03/15/2025 06:10	03/15/2025 17:24	YR
								Certifications:	NELAC-NY12058,NJDEP-NY037		
67-64-1	Acetone	ND		ug/m³	0.48	1.9	1	EPA TO-15	03/15/2025 06:10	03/15/2025 17:24	YR
								Certifications:	NELAC-NY12058,NJDEP-NY037		
107-13-1	Acrylonitrile	ND		ug/m³	0.22	2.8	1	EPA TO-15	03/15/2025 06:10	03/15/2025 17:24	YR
								Certifications:	NELAC-NY12058,NJDEP-NY037		
71-43-2	Benzene	ND		ug/m³	0.32	0.32	1	EPA TO-15	03/15/2025 06:10	03/15/2025 17:24	YR
								Certifications:	NELAC-NY12058,NJDEP-NY037		
100-44-7	Benzyl chloride	ND		ug/m³	0.52	0.52	1	EPA TO-15	03/15/2025 06:10	03/15/2025 17:24	YR
								Certifications:	NELAC-NY12058,NJDEP-NY037		
75-27-4	Bromodichloromethane	ND		ug/m³	0.67	0.67	1	EPA TO-15	03/15/2025 06:10	03/15/2025 17:24	YR
								Certifications:	NELAC-NY12058,NJDEP-NY037		
75-25-2	Bromoform	ND		ug/m³	1.0	1.0	1	EPA TO-15	03/15/2025 06:10	03/15/2025 17:24	YR
								Certifications:	NELAC-NY12058,NJDEP-NY037		
74-83-9	Bromomethane	ND		ug/m³	0.39	0.39	1	EPA TO-15	03/15/2025 06:10	03/15/2025 17:24	YR
								Certifications:	NELAC-NY12058,NJDEP-NY037		
75-15-0	Carbon disulfide	ND		ug/m³	0.31	0.31	1	EPA TO-15	03/15/2025 06:10	03/15/2025 17:24	YR
								Certifications:	NELAC-NY12058,NJDEP-NY037		
56-23-5	Carbon tetrachloride	ND		ug/m³	0.16	0.16	1	EPA TO-15	03/15/2025 06:10	03/15/2025 17:24	YR
								Certifications:	NELAC-NY12058,NJDEP-NY037		
108-90-7	Chlorobenzene	ND		ug/m³	0.46	0.46	1	EPA TO-15	03/15/2025 06:10	03/15/2025 17:24	YR
								Certifications:	NELAC-NY12058,NJDEP-NY037		
75-00-3	Chloroethane	ND		ug/m³	0.26	0.26	1	EPA TO-15	03/15/2025 06:10	03/15/2025 17:24	YR
								Certifications:	NELAC-NY12058,NJDEP-NY037		
67-66-3	Chloroform	ND		ug/m³	0.49	0.49	1	EPA TO-15	03/15/2025 06:10	03/15/2025 17:24	YR
								Certifications:	NELAC-NY12058,NJDEP-NY037		
74-87-3	Chloromethane	ND		ug/m³	0.21	0.21	1	EPA TO-15	03/15/2025 06:10	03/15/2025 17:24	YR
								Certifications:	NELAC-NY12058,NJDEP-NY037		
156-59-2	cis-1,2-Dichloroethylene	ND		ug/m³	0.099	0.099	1	EPA TO-15	03/15/2025 06:10	03/15/2025 17:24	YR
								Certifications:	NELAC-NY12058,NJDEP-NY037		
10061-01-5	cis-1,3-Dichloropropylene	ND		ug/m³	0.45	0.45	1	EPA TO-15	03/15/2025 06:10	03/15/2025 17:24	YR
								Certifications:	NELAC-NY12058,NJDEP-NY037		
110-82-7	Cyclohexane	ND		ug/m³	0.34	0.34	1	EPA TO-15	03/15/2025 06:10	03/15/2025 17:24	YR
								Certifications:	NELAC-NY12058,NJDEP-NY037		
124-48-1	Dibromochloromethane	ND		ug/m³	0.85	0.85	1	EPA TO-15	03/15/2025 06:10	03/15/2025 17:24	YR
								Certifications:	NELAC-NY12058,NJDEP-NY037		
75-71-8	Dichlorodifluoromethane	ND		ug/m³	0.49	0.49	1	EPA TO-15	03/15/2025 06:10	03/15/2025 17:24	YR
								Certifications:	NELAC-NY12058,NJDEP-NY037		

Sample Information

Client Sample ID: CAN 49577 / FC 20932 **York Sample ID:** 25C1102-01

York Project (SDG) No.	Client Project ID	Matrix	Collection Date/Time	Date Received
25C1102	170361307	Air	March 14, 2025 3:03 pm	03/18/2025

Volatile Organics, EPA TO15 Full List

Log-in Notes:

Sample Notes:

Sample Prepared by Method: EPA TO15 PREP

CAS No.	Parameter	Result	Flag	Units	Reported to LOD/MDL	LOQ	Dilution	Reference Method	Date/Time Prepared	Date/Time Analyzed	Analyst
141-78-6	* Ethyl acetate	ND		ug/m³	0.72	0.72	1	EPA TO-15	03/15/2025 06:10	03/15/2025 17:24	YR
								Certifications:			
100-41-4	Ethyl Benzene	ND		ug/m³	0.43	0.43	1	EPA TO-15	03/15/2025 06:10	03/15/2025 17:24	YR
								Certifications:	NELAC-NY12058,NJDEP-NY037		
87-68-3	Hexachlorobutadiene	ND		ug/m³	1.1	1.1	1	EPA TO-15	03/15/2025 06:10	03/15/2025 17:24	YR
								Certifications:	NELAC-NY12058,NJDEP-NY037		
67-63-0	**Isopropanol**	**1.1**	J	ug/m³	0.49	1.5	1	EPA TO-15	03/15/2025 06:10	03/15/2025 17:24	YR
								Certifications:	NELAC-NY12058,NJDEP-NY037		
80-62-6	Methyl Methacrylate	ND		ug/m³	0.41	0.41	1	EPA TO-15	03/15/2025 06:10	03/15/2025 17:24	YR
								Certifications:	NELAC-NY12058,NJDEP-NY037		
1634-04-4	Methyl tert-butyl ether (MTBE)	ND		ug/m³	0.36	0.36	1	EPA TO-15	03/15/2025 06:10	03/15/2025 17:24	YR
								Certifications:	NELAC-NY12058,NJDEP-NY037		
75-09-2	Methylene chloride	ND		ug/m³	0.69	2.1	1	EPA TO-15	03/15/2025 06:10	03/15/2025 17:24	YR
								Certifications:	NELAC-NY12058,NJDEP-NY037		
91-20-3	* Naphthalene	ND		ug/m³	1.0	1.0	1	EPA TO-15	03/15/2025 06:10	03/15/2025 17:24	YR
								Certifications:	NJDEP-NY037		
142-82-5	n-Heptane	ND		ug/m³	0.41	0.41	1	EPA TO-15	03/15/2025 06:10	03/15/2025 17:24	YR
								Certifications:	NELAC-NY12058,NJDEP-NY037		
110-54-3	n-Hexane	ND		ug/m³	0.35	0.35	1	EPA TO-15	03/15/2025 06:10	03/15/2025 17:24	YR
								Certifications:	NELAC-NY12058,NJDEP-NY037		
95-47-6	o-Xylene	ND		ug/m³	0.43	0.43	1	EPA TO-15	03/15/2025 06:10	03/15/2025 17:24	YR
								Certifications:	NELAC-NY12058,NJDEP-NY037		
179601-23-1	p- & m- Xylenes	ND		ug/m³	0.87	0.87	1	EPA TO-15	03/15/2025 06:10	03/15/2025 17:24	YR
								Certifications:	NELAC-NY12058,NJDEP-NY037		
622-96-8	* p-Ethyltoluene	ND		ug/m³	0.49	0.49	1	EPA TO-15	03/15/2025 06:10	03/15/2025 17:24	YR
								Certifications:			
115-07-1	* Propylene	ND		ug/m³	0.17	0.17	1	EPA TO-15	03/15/2025 06:10	03/15/2025 17:24	YR
								Certifications:			
100-42-5	Styrene	ND		ug/m³	0.43	0.43	1	EPA TO-15	03/15/2025 06:10	03/15/2025 17:24	YR
								Certifications:	NELAC-NY12058,NJDEP-NY037		
127-18-4	Tetrachloroethylene	ND		ug/m³	0.68	0.68	1	EPA TO-15	03/15/2025 06:10	03/15/2025 17:24	YR
								Certifications:	NELAC-NY12058,NJDEP-NY037		
109-99-9	* Tetrahydrofuran	ND		ug/m³	0.59	0.59	1	EPA TO-15	03/15/2025 06:10	03/15/2025 17:24	YR
								Certifications:			
108-88-3	Toluene	ND		ug/m³	0.38	0.38	1	EPA TO-15	03/15/2025 06:10	03/15/2025 17:24	YR
								Certifications:	NELAC-NY12058,NJDEP-NY037		
156-60-5	trans-1,2-Dichloroethylene	ND		ug/m³	0.40	0.40	1	EPA TO-15	03/15/2025 06:10	03/15/2025 17:24	YR
								Certifications:	NELAC-NY12058,NJDEP-NY037		
10061-02-6	trans-1,3-Dichloropropylene	ND		ug/m³	0.45	0.45	1	EPA TO-15	03/15/2025 06:10	03/15/2025 17:24	YR
								Certifications:	NELAC-NY12058,NJDEP-NY037		
79-01-6	Trichloroethylene	ND		ug/m³	0.13	0.13	1	EPA TO-15	03/15/2025 06:10	03/15/2025 17:24	YR
								Certifications:	NELAC-NY12058,NJDEP-NY037		
75-69-4	Trichlorofluoromethane (Freon 11)	ND		ug/m³	0.56	0.56	1	EPA TO-15	03/15/2025 06:10	03/15/2025 17:24	YR
								Certifications:	NELAC-NY12058,NJDEP-NY037		

Sample Information

Client Sample ID: CAN 49577 / FC 20932 **York Sample ID:** 25C1102-01

York Project (SDG) No.	Client Project ID	Matrix	Collection Date/Time	Date Received
25C1102	170361307	Air	March 14, 2025 3:03 pm	03/18/2025

Volatile Organics, EPA TO15 Full List

Log-in Notes:

Sample Notes:

Sample Prepared by Method: EPA TO15 PREP

CAS No.	Parameter	Result	Flag	Units	Reported to LOD/MDL	LOQ	Dilution	Reference Method	Date/Time Prepared	Date/Time Analyzed	Analyst
108-05-4	Vinyl acetate	ND		ug/m³	0.35	0.35	1	EPA TO-15	03/15/2025 06:10	03/15/2025 17:24	YR
								Certifications:	NELAC-NY12058,NJDEP-NY037		
593-60-2	Vinyl bromide	ND		ug/m³	0.44	0.44	1	EPA TO-15	03/15/2025 06:10	03/15/2025 17:24	YR
								Certifications:	NELAC-NY12058,NJDEP-NY037		
75-01-4	Vinyl Chloride	ND		ug/m³	0.13	0.13	1	EPA TO-15	03/15/2025 06:10	03/15/2025 17:24	YR
								Certifications:	NELAC-NY12058,NJDEP-NY037		

Sample Information

Client Sample ID: CAN 51008 / FC 19431 **York Sample ID:** 25C1102-02

York Project (SDG) No.	Client Project ID	Matrix	Collection Date/Time	Date Received
25C1102	170361307	Air	March 13, 2025 1:41 pm	03/18/2025

Volatile Organics, EPA TO15 Full List

Log-in Notes:

Sample Notes:

Sample Prepared by Method: EPA TO15 PREP

CAS No.	Parameter	Result	Flag	Units	Reported to LOD/MDL	LOQ	Dilution	Reference Method	Date/Time Prepared	Date/Time Analyzed	Analyst
630-20-6	* 1,1,1,2-Tetrachloroethane	ND		ug/m³	0.69	0.69	1	EPA TO-15	03/15/2025 06:10	03/15/2025 14:20	YR
								Certifications:			
71-55-6	1,1,1-Trichloroethane	ND		ug/m³	0.55	0.55	1	EPA TO-15	03/15/2025 06:10	03/15/2025 14:20	YR
								Certifications:	NELAC-NY12058,NJDEP-NY037		
79-34-5	1,1,2,2-Tetrachloroethane	ND		ug/m³	0.69	0.69	1	EPA TO-15	03/15/2025 06:10	03/15/2025 14:20	YR
								Certifications:	NELAC-NY12058,NJDEP-NY037		
76-13-1	1,1,2-Trichloro-1,2,2-trifluoroethane (Freon 113)	ND		ug/m³	0.77	0.77	1	EPA TO-15	03/15/2025 06:10	03/15/2025 14:20	YR
								Certifications:	NELAC-NY12058,NJDEP-NY037		
79-00-5	1,1,2-Trichloroethane	ND		ug/m³	0.55	0.55	1	EPA TO-15	03/15/2025 06:10	03/15/2025 14:20	YR
								Certifications:	NELAC-NY12058,NJDEP-NY037		
75-34-3	1,1-Dichloroethane	ND		ug/m³	0.40	0.40	1	EPA TO-15	03/15/2025 06:10	03/15/2025 14:20	YR
								Certifications:	NELAC-NY12058,NJDEP-NY037		
75-35-4	1,1-Dichloroethylene	ND		ug/m³	0.099	0.099	1	EPA TO-15	03/15/2025 06:10	03/15/2025 14:20	YR
								Certifications:	NELAC-NY12058,NJDEP-NY037		
120-82-1	1,2,4-Trichlorobenzene	ND		ug/m³	0.74	0.74	1	EPA TO-15	03/15/2025 06:10	03/15/2025 14:20	YR
								Certifications:	NELAC-NY12058,NJDEP-NY037		
95-63-6	1,2,4-Trimethylbenzene	ND		ug/m³	0.49	0.49	1	EPA TO-15	03/15/2025 06:10	03/15/2025 14:20	YR
								Certifications:	NELAC-NY12058,NJDEP-NY037		
106-93-4	1,2-Dibromoethane	ND		ug/m³	0.77	0.77	1	EPA TO-15	03/15/2025 06:10	03/15/2025 14:20	YR
								Certifications:	NELAC-NY12058,NJDEP-NY037		
95-50-1	1,2-Dichlorobenzene	ND		ug/m³	0.60	0.60	1	EPA TO-15	03/15/2025 06:10	03/15/2025 14:20	YR
								Certifications:	NELAC-NY12058,NJDEP-NY037		
107-06-2	1,2-Dichloroethane	ND		ug/m³	0.40	0.40	1	EPA TO-15	03/15/2025 06:10	03/15/2025 14:20	YR
								Certifications:	NELAC-NY12058,NJDEP-NY037		
78-87-5	1,2-Dichloropropane	ND		ug/m³	0.46	0.46	1	EPA TO-15	03/15/2025 06:10	03/15/2025 14:20	YR
								Certifications:	NELAC-NY12058,NJDEP-NY037		
76-14-2	1,2-Dichlorotetrafluoroethane	ND		ug/m³	0.70	0.70	1	EPA TO-15	03/15/2025 06:10	03/15/2025 14:20	YR
								Certifications:	NELAC-NY12058,NJDEP-NY037		
108-67-8	1,3,5-Trimethylbenzene	ND		ug/m³	0.49	0.49	1	EPA TO-15	03/15/2025 06:10	03/15/2025 14:20	YR
								Certifications:	NELAC-NY12058,NJDEP-NY037		
106-99-0	1,3-Butadiene	ND		ug/m³	0.66	0.66	1	EPA TO-15	03/15/2025 06:10	03/15/2025 14:20	YR
								Certifications:	NELAC-NY12058,NJDEP-NY037		
541-73-1	1,3-Dichlorobenzene	ND		ug/m³	0.60	0.60	1	EPA TO-15	03/15/2025 06:10	03/15/2025 14:20	YR
								Certifications:	NELAC-NY12058,NJDEP-NY037		
142-28-9	* 1,3-Dichloropropane	ND		ug/m³	0.46	0.46	1	EPA TO-15	03/15/2025 06:10	03/15/2025 14:20	YR
								Certifications:			
106-46-7	1,4-Dichlorobenzene	ND		ug/m³	0.60	0.60	1	EPA TO-15	03/15/2025 06:10	03/15/2025 14:20	YR
								Certifications:	NELAC-NY12058,NJDEP-NY037		
123-91-1	1,4-Dioxane	ND		ug/m³	0.72	0.72	1	EPA TO-15	03/15/2025 06:10	03/15/2025 14:20	YR
								Certifications:	NELAC-NY12058,NJDEP-NY037		
540-84-1	* 2,2,4-Trimethylpentane	ND		ug/m³	0.12	0.23	1	EPA TO-15	03/15/2025 06:10	03/15/2025 14:20	YR
								Certifications:			
78-93-3	2-Butanone	ND		ug/m³	0.29	0.29	1	EPA TO-15	03/15/2025 06:10	03/15/2025 14:20	YR
								Certifications:	NELAC-NY12058,NJDEP-NY037		

Sample Information

Client Sample ID: CAN 51008 / FC 19431 **York Sample ID:** 25C1102-02

York Project (SDG) No.	Client Project ID	Matrix	Collection Date/Time	Date Received
25C1102	170361307	Air	March 13, 2025 1:41 pm	03/18/2025

Volatile Organics, EPA TO15 Full List

Log-in Notes:

Sample Notes:

Sample Prepared by Method: EPA TO15 PREP

CAS No.	Parameter	Result	Flag	Units	Reported to LOD/MDL	LOQ	Dilution	Reference Method	Date/Time Prepared	Date/Time Analyzed	Analyst
591-78-6	* 2-Hexanone	ND		ug/m³	0.82	0.82	1	EPA TO-15	03/15/2025 06:10	03/15/2025 14:20	YR
								Certifications:			
107-05-1	3-Chloropropene	ND		ug/m³	1.6	1.6	1	EPA TO-15	03/15/2025 06:10	03/15/2025 14:20	YR
								Certifications:	NELAC-NY12058,NJDEP-NY037		
108-10-1	4-Methyl-2-pentanone	ND		ug/m³	0.41	0.41	1	EPA TO-15	03/15/2025 06:10	03/15/2025 14:20	YR
								Certifications:	NELAC-NY12058,NJDEP-NY037		
67-64-1	Acetone	ND		ug/m³	0.48	1.9	1	EPA TO-15	03/15/2025 06:10	03/15/2025 14:20	YR
								Certifications:	NELAC-NY12058,NJDEP-NY037		
107-13-1	Acrylonitrile	ND		ug/m³	0.22	2.8	1	EPA TO-15	03/15/2025 06:10	03/15/2025 14:20	YR
								Certifications:	NELAC-NY12058,NJDEP-NY037		
71-43-2	Benzene	ND		ug/m³	0.32	0.32	1	EPA TO-15	03/15/2025 06:10	03/15/2025 14:20	YR
								Certifications:	NELAC-NY12058,NJDEP-NY037		
100-44-7	Benzyl chloride	ND		ug/m³	0.52	0.52	1	EPA TO-15	03/15/2025 06:10	03/15/2025 14:20	YR
								Certifications:	NELAC-NY12058,NJDEP-NY037		
75-27-4	Bromodichloromethane	ND		ug/m³	0.67	0.67	1	EPA TO-15	03/15/2025 06:10	03/15/2025 14:20	YR
								Certifications:	NELAC-NY12058,NJDEP-NY037		
75-25-2	Bromoform	ND		ug/m³	1.0	1.0	1	EPA TO-15	03/15/2025 06:10	03/15/2025 14:20	YR
								Certifications:	NELAC-NY12058,NJDEP-NY037		
74-83-9	Bromomethane	ND		ug/m³	0.39	0.39	1	EPA TO-15	03/15/2025 06:10	03/15/2025 14:20	YR
								Certifications:	NELAC-NY12058,NJDEP-NY037		
75-15-0	Carbon disulfide	ND		ug/m³	0.31	0.31	1	EPA TO-15	03/15/2025 06:10	03/15/2025 14:20	YR
								Certifications:	NELAC-NY12058,NJDEP-NY037		
56-23-5	Carbon tetrachloride	ND		ug/m³	0.16	0.16	1	EPA TO-15	03/15/2025 06:10	03/15/2025 14:20	YR
								Certifications:	NELAC-NY12058,NJDEP-NY037		
108-90-7	Chlorobenzene	ND		ug/m³	0.46	0.46	1	EPA TO-15	03/15/2025 06:10	03/15/2025 14:20	YR
								Certifications:	NELAC-NY12058,NJDEP-NY037		
75-00-3	Chloroethane	ND		ug/m³	0.26	0.26	1	EPA TO-15	03/15/2025 06:10	03/15/2025 14:20	YR
								Certifications:	NELAC-NY12058,NJDEP-NY037		
67-66-3	Chloroform	ND		ug/m³	0.49	0.49	1	EPA TO-15	03/15/2025 06:10	03/15/2025 14:20	YR
								Certifications:	NELAC-NY12058,NJDEP-NY037		
74-87-3	Chloromethane	ND		ug/m³	0.21	0.21	1	EPA TO-15	03/15/2025 06:10	03/15/2025 14:20	YR
								Certifications:	NELAC-NY12058,NJDEP-NY037		
156-59-2	cis-1,2-Dichloroethylene	ND		ug/m³	0.099	0.099	1	EPA TO-15	03/15/2025 06:10	03/15/2025 14:20	YR
								Certifications:	NELAC-NY12058,NJDEP-NY037		
10061-01-5	cis-1,3-Dichloropropylene	ND		ug/m³	0.45	0.45	1	EPA TO-15	03/15/2025 06:10	03/15/2025 14:20	YR
								Certifications:	NELAC-NY12058,NJDEP-NY037		
110-82-7	Cyclohexane	ND		ug/m³	0.34	0.34	1	EPA TO-15	03/15/2025 06:10	03/15/2025 14:20	YR
								Certifications:	NELAC-NY12058,NJDEP-NY037		
124-48-1	Dibromochloromethane	ND		ug/m³	0.85	0.85	1	EPA TO-15	03/15/2025 06:10	03/15/2025 14:20	YR
								Certifications:	NELAC-NY12058,NJDEP-NY037		
75-71-8	Dichlorodifluoromethane	ND		ug/m³	0.49	0.49	1	EPA TO-15	03/15/2025 06:10	03/15/2025 14:20	YR
								Certifications:	NELAC-NY12058,NJDEP-NY037		
141-78-6	* Ethyl acetate	ND		ug/m³	0.72	0.72	1	EPA TO-15	03/15/2025 06:10	03/15/2025 14:20	YR
								Certifications:			

Sample Information

Client Sample ID: CAN 51008 / FC 19431 **York Sample ID:** 25C1102-02

York Project (SDG) No.	Client Project ID	Matrix	Collection Date/Time	Date Received
25C1102	170361307	Air	March 13, 2025 1:41 pm	03/18/2025

Volatile Organics, EPA TO15 Full List **Log-in Notes:** **Sample Notes:**

Sample Prepared by Method: EPA TO15 PREP

CAS No.	Parameter	Result	Flag	Units	Reported to LOD/MDL	LOQ	Dilution	Reference Method	Date/Time Prepared	Date/Time Analyzed	Analyst
100-41-4	Ethyl Benzene	ND		ug/m³	0.43	0.43	1	EPA TO-15	03/15/2025 06:10	03/15/2025 14:20	YR
								Certifications:	NELAC-NY12058,NJDEP-NY037		
87-68-3	Hexachlorobutadiene	ND		ug/m³	1.1	1.1	1	EPA TO-15	03/15/2025 06:10	03/15/2025 14:20	YR
								Certifications:	NELAC-NY12058,NJDEP-NY037		
67-63-0	**Isopropanol**	**1.4**	J	ug/m³	0.49	1.5	1	EPA TO-15	03/15/2025 06:10	03/15/2025 14:20	YR
								Certifications:	NELAC-NY12058,NJDEP-NY037		
80-62-6	Methyl Methacrylate	ND		ug/m³	0.41	0.41	1	EPA TO-15	03/15/2025 06:10	03/15/2025 14:20	YR
								Certifications:	NELAC-NY12058,NJDEP-NY037		
1634-04-4	Methyl tert-butyl ether (MTBE)	ND		ug/m³	0.36	0.36	1	EPA TO-15	03/15/2025 06:10	03/15/2025 14:20	YR
								Certifications:	NELAC-NY12058,NJDEP-NY037		
75-09-2	Methylene chloride	ND		ug/m³	0.69	2.1	1	EPA TO-15	03/15/2025 06:10	03/15/2025 14:20	YR
								Certifications:	NELAC-NY12058,NJDEP-NY037		
91-20-3	* Naphthalene	ND		ug/m³	1.0	1.0	1	EPA TO-15	03/15/2025 06:10	03/15/2025 14:20	YR
								Certifications:	NJDEP-NY037		
142-82-5	n-Heptane	ND		ug/m³	0.41	0.41	1	EPA TO-15	03/15/2025 06:10	03/15/2025 14:20	YR
								Certifications:	NELAC-NY12058,NJDEP-NY037		
110-54-3	n-Hexane	ND		ug/m³	0.35	0.35	1	EPA TO-15	03/15/2025 06:10	03/15/2025 14:20	YR
								Certifications:	NELAC-NY12058,NJDEP-NY037		
95-47-6	o-Xylene	ND		ug/m³	0.43	0.43	1	EPA TO-15	03/15/2025 06:10	03/15/2025 14:20	YR
								Certifications:	NELAC-NY12058,NJDEP-NY037		
179601-23-1	p- & m- Xylenes	ND		ug/m³	0.87	0.87	1	EPA TO-15	03/15/2025 06:10	03/15/2025 14:20	YR
								Certifications:	NELAC-NY12058,NJDEP-NY037		
622-96-8	* p-Ethyltoluene	ND		ug/m³	0.49	0.49	1	EPA TO-15	03/15/2025 06:10	03/15/2025 14:20	YR
								Certifications:			
115-07-1	* Propylene	ND		ug/m³	0.17	0.17	1	EPA TO-15	03/15/2025 06:10	03/15/2025 14:20	YR
								Certifications:			
100-42-5	Styrene	ND		ug/m³	0.43	0.43	1	EPA TO-15	03/15/2025 06:10	03/15/2025 14:20	YR
								Certifications:	NELAC-NY12058,NJDEP-NY037		
127-18-4	Tetrachloroethylene	ND		ug/m³	0.68	0.68	1	EPA TO-15	03/15/2025 06:10	03/15/2025 14:20	YR
								Certifications:	NELAC-NY12058,NJDEP-NY037		
109-99-9	* Tetrahydrofuran	ND		ug/m³	0.59	0.59	1	EPA TO-15	03/15/2025 06:10	03/15/2025 14:20	YR
								Certifications:			
108-88-3	Toluene	ND		ug/m³	0.38	0.38	1	EPA TO-15	03/15/2025 06:10	03/15/2025 14:20	YR
								Certifications:	NELAC-NY12058,NJDEP-NY037		
156-60-5	trans-1,2-Dichloroethylene	ND		ug/m³	0.40	0.40	1	EPA TO-15	03/15/2025 06:10	03/15/2025 14:20	YR
								Certifications:	NELAC-NY12058,NJDEP-NY037		
10061-02-6	trans-1,3-Dichloropropylene	ND		ug/m³	0.45	0.45	1	EPA TO-15	03/15/2025 06:10	03/15/2025 14:20	YR
								Certifications:	NELAC-NY12058,NJDEP-NY037		
79-01-6	Trichloroethylene	ND		ug/m³	0.13	0.13	1	EPA TO-15	03/15/2025 06:10	03/15/2025 14:20	YR
								Certifications:	NELAC-NY12058,NJDEP-NY037		
75-69-4	Trichlorofluoromethane (Freon 11)	ND		ug/m³	0.56	0.56	1	EPA TO-15	03/15/2025 06:10	03/15/2025 14:20	YR
								Certifications:	NELAC-NY12058,NJDEP-NY037		
108-05-4	Vinyl acetate	ND		ug/m³	0.35	0.35	1	EPA TO-15	03/15/2025 06:10	03/15/2025 14:20	YR
								Certifications:	NELAC-NY12058,NJDEP-NY037		

Sample Information

Client Sample ID: CAN 51008 / FC 19431 **York Sample ID:** 25C1102-02

York Project (SDG) No.	Client Project ID	Matrix	Collection Date/Time	Date Received
25C1102	170361307	Air	March 13, 2025 1:41 pm	03/18/2025

Volatile Organics, EPA TO15 Full List

Log-in Notes:

Sample Notes:

Sample Prepared by Method: EPA TO15 PREP

CAS No.	Parameter	Result	Flag	Units	Reported to LOD/MDL	LOQ	Dilution	Reference Method	Date/Time Prepared	Date/Time Analyzed	Analyst
593-60-2	Vinyl bromide	ND		ug/m³	0.44	0.44	1	EPA TO-15	03/15/2025 06:10	03/15/2025 14:20	YR
								Certifications:	NELAC-NY12058,NJDEP-NY037		
75-01-4	Vinyl Chloride	ND		ug/m³	0.13	0.13	1	EPA TO-15	03/15/2025 06:10	03/15/2025 14:20	YR
								Certifications:	NELAC-NY12058,NJDEP-NY037		

Sample Information

Client Sample ID: CAN 49976 / FC 19415 **York Sample ID:** 25C1102-04

York Project (SDG) No.	Client Project ID	Matrix	Collection Date/Time	Date Received
25C1102	170361307	Air	March 8, 2025 3:15 pm	03/18/2025

Volatile Organics, EPA TO15 Full List

Log-in Notes:

Sample Notes:

Sample Prepared by Method: EPA TO15 PREP

CAS No.	Parameter	Result	Flag	Units	Reported to LOD/MDL	LOQ	Dilution	Reference Method	Date/Time Prepared	Date/Time Analyzed	Analyst
630-20-6	* 1,1,1,2-Tetrachloroethane	ND		ug/m³	0.69	0.69	1	EPA TO-15	03/15/2025 06:10	03/15/2025 18:10	YR
								Certifications:			
71-55-6	1,1,1-Trichloroethane	ND		ug/m³	0.55	0.55	1	EPA TO-15	03/15/2025 06:10	03/15/2025 18:10	YR
								Certifications:	NELAC-NY12058,NJDEP-NY037		
79-34-5	1,1,2,2-Tetrachloroethane	ND		ug/m³	0.69	0.69	1	EPA TO-15	03/15/2025 06:10	03/15/2025 18:10	YR
								Certifications:	NELAC-NY12058,NJDEP-NY037		
76-13-1	1,1,2-Trichloro-1,2,2-trifluoroethane (Freon 113)	ND		ug/m³	0.77	0.77	1	EPA TO-15	03/15/2025 06:10	03/15/2025 18:10	YR
								Certifications:	NELAC-NY12058,NJDEP-NY037		
79-00-5	1,1,2-Trichloroethane	ND		ug/m³	0.55	0.55	1	EPA TO-15	03/15/2025 06:10	03/15/2025 18:10	YR
								Certifications:	NELAC-NY12058,NJDEP-NY037		
75-34-3	1,1-Dichloroethane	ND		ug/m³	0.40	0.40	1	EPA TO-15	03/15/2025 06:10	03/15/2025 18:10	YR
								Certifications:	NELAC-NY12058,NJDEP-NY037		
75-35-4	1,1-Dichloroethylene	ND		ug/m³	0.099	0.099	1	EPA TO-15	03/15/2025 06:10	03/15/2025 18:10	YR
								Certifications:	NELAC-NY12058,NJDEP-NY037		
120-82-1	1,2,4-Trichlorobenzene	ND		ug/m³	0.74	0.74	1	EPA TO-15	03/15/2025 06:10	03/15/2025 18:10	YR
								Certifications:	NELAC-NY12058,NJDEP-NY037		
95-63-6	1,2,4-Trimethylbenzene	ND		ug/m³	0.49	0.49	1	EPA TO-15	03/15/2025 06:10	03/15/2025 18:10	YR
								Certifications:	NELAC-NY12058,NJDEP-NY037		
106-93-4	1,2-Dibromoethane	ND		ug/m³	0.77	0.77	1	EPA TO-15	03/15/2025 06:10	03/15/2025 18:10	YR
								Certifications:	NELAC-NY12058,NJDEP-NY037		
95-50-1	1,2-Dichlorobenzene	ND		ug/m³	0.60	0.60	1	EPA TO-15	03/15/2025 06:10	03/15/2025 18:10	YR
								Certifications:	NELAC-NY12058,NJDEP-NY037		
107-06-2	1,2-Dichloroethane	ND		ug/m³	0.40	0.40	1	EPA TO-15	03/15/2025 06:10	03/15/2025 18:10	YR
								Certifications:	NELAC-NY12058,NJDEP-NY037		
78-87-5	1,2-Dichloropropane	ND		ug/m³	0.46	0.46	1	EPA TO-15	03/15/2025 06:10	03/15/2025 18:10	YR
								Certifications:	NELAC-NY12058,NJDEP-NY037		
76-14-2	1,2-Dichlorotetrafluoroethane	ND		ug/m³	0.70	0.70	1	EPA TO-15	03/15/2025 06:10	03/15/2025 18:10	YR
								Certifications:	NELAC-NY12058,NJDEP-NY037		
108-67-8	1,3,5-Trimethylbenzene	ND		ug/m³	0.49	0.49	1	EPA TO-15	03/15/2025 06:10	03/15/2025 18:10	YR
								Certifications:	NELAC-NY12058,NJDEP-NY037		
106-99-0	1,3-Butadiene	ND		ug/m³	0.66	0.66	1	EPA TO-15	03/15/2025 06:10	03/15/2025 18:10	YR
								Certifications:	NELAC-NY12058,NJDEP-NY037		
541-73-1	1,3-Dichlorobenzene	ND		ug/m³	0.60	0.60	1	EPA TO-15	03/15/2025 06:10	03/15/2025 18:10	YR
								Certifications:	NELAC-NY12058,NJDEP-NY037		
142-28-9	* 1,3-Dichloropropane	ND		ug/m³	0.46	0.46	1	EPA TO-15	03/15/2025 06:10	03/15/2025 18:10	YR
								Certifications:			
106-46-7	1,4-Dichlorobenzene	ND		ug/m³	0.60	0.60	1	EPA TO-15	03/15/2025 06:10	03/15/2025 18:10	YR
								Certifications:	NELAC-NY12058,NJDEP-NY037		
123-91-1	1,4-Dioxane	ND		ug/m³	0.72	0.72	1	EPA TO-15	03/15/2025 06:10	03/15/2025 18:10	YR
								Certifications:	NELAC-NY12058,NJDEP-NY037		
540-84-1	* 2,2,4-Trimethylpentane	ND		ug/m³	0.12	0.23	1	EPA TO-15	03/15/2025 06:10	03/15/2025 18:10	YR
								Certifications:			
78-93-3	2-Butanone	ND		ug/m³	0.29	0.29	1	EPA TO-15	03/15/2025 06:10	03/15/2025 18:10	YR
								Certifications:	NELAC-NY12058,NJDEP-NY037		

Sample Information

Client Sample ID: CAN 49976 / FC 19415 **York Sample ID:** 25C1102-04

York Project (SDG) No.	Client Project ID	Matrix	Collection Date/Time	Date Received
25C1102	170361307	Air	March 8, 2025 3:15 pm	03/18/2025

Volatile Organics, EPA TO15 Full List

Log-in Notes:

Sample Notes:

Sample Prepared by Method: EPA TO15 PREP

CAS No.	Parameter	Result	Flag	Units	Reported to LOD/MDL	LOQ	Dilution	Reference Method	Date/Time Prepared	Date/Time Analyzed	Analyst
591-78-6	* 2-Hexanone	ND		ug/m³	0.82	0.82	1	EPA TO-15	03/15/2025 06:10	03/15/2025 18:10	YR
								Certifications:			
107-05-1	3-Chloropropene	ND		ug/m³	1.6	1.6	1	EPA TO-15	03/15/2025 06:10	03/15/2025 18:10	YR
								Certifications:	NELAC-NY12058,NJDEP-NY037		
108-10-1	4-Methyl-2-pentanone	ND		ug/m³	0.41	0.41	1	EPA TO-15	03/15/2025 06:10	03/15/2025 18:10	YR
								Certifications:	NELAC-NY12058,NJDEP-NY037		
67-64-1	Acetone	ND		ug/m³	0.48	1.9	1	EPA TO-15	03/15/2025 06:10	03/15/2025 18:10	YR
								Certifications:	NELAC-NY12058,NJDEP-NY037		
107-13-1	Acrylonitrile	ND		ug/m³	0.22	2.8	1	EPA TO-15	03/15/2025 06:10	03/15/2025 18:10	YR
								Certifications:	NELAC-NY12058,NJDEP-NY037		
71-43-2	Benzene	ND		ug/m³	0.32	0.32	1	EPA TO-15	03/15/2025 06:10	03/15/2025 18:10	YR
								Certifications:	NELAC-NY12058,NJDEP-NY037		
100-44-7	Benzyl chloride	ND		ug/m³	0.52	0.52	1	EPA TO-15	03/15/2025 06:10	03/15/2025 18:10	YR
								Certifications:	NELAC-NY12058,NJDEP-NY037		
75-27-4	Bromodichloromethane	ND		ug/m³	0.67	0.67	1	EPA TO-15	03/15/2025 06:10	03/15/2025 18:10	YR
								Certifications:	NELAC-NY12058,NJDEP-NY037		
75-25-2	Bromoform	ND		ug/m³	1.0	1.0	1	EPA TO-15	03/15/2025 06:10	03/15/2025 18:10	YR
								Certifications:	NELAC-NY12058,NJDEP-NY037		
74-83-9	Bromomethane	ND		ug/m³	0.39	0.39	1	EPA TO-15	03/15/2025 06:10	03/15/2025 18:10	YR
								Certifications:	NELAC-NY12058,NJDEP-NY037		
75-15-0	Carbon disulfide	ND		ug/m³	0.31	0.31	1	EPA TO-15	03/15/2025 06:10	03/15/2025 18:10	YR
								Certifications:	NELAC-NY12058,NJDEP-NY037		
56-23-5	Carbon tetrachloride	ND		ug/m³	0.16	0.16	1	EPA TO-15	03/15/2025 06:10	03/15/2025 18:10	YR
								Certifications:	NELAC-NY12058,NJDEP-NY037		
108-90-7	Chlorobenzene	ND		ug/m³	0.46	0.46	1	EPA TO-15	03/15/2025 06:10	03/15/2025 18:10	YR
								Certifications:	NELAC-NY12058,NJDEP-NY037		
75-00-3	Chloroethane	ND		ug/m³	0.26	0.26	1	EPA TO-15	03/15/2025 06:10	03/15/2025 18:10	YR
								Certifications:	NELAC-NY12058,NJDEP-NY037		
67-66-3	Chloroform	ND		ug/m³	0.49	0.49	1	EPA TO-15	03/15/2025 06:10	03/15/2025 18:10	YR
								Certifications:	NELAC-NY12058,NJDEP-NY037		
74-87-3	Chloromethane	ND		ug/m³	0.21	0.21	1	EPA TO-15	03/15/2025 06:10	03/15/2025 18:10	YR
								Certifications:	NELAC-NY12058,NJDEP-NY037		
156-59-2	cis-1,2-Dichloroethylene	ND		ug/m³	0.099	0.099	1	EPA TO-15	03/15/2025 06:10	03/15/2025 18:10	YR
								Certifications:	NELAC-NY12058,NJDEP-NY037		
10061-01-5	cis-1,3-Dichloropropylene	ND		ug/m³	0.45	0.45	1	EPA TO-15	03/15/2025 06:10	03/15/2025 18:10	YR
								Certifications:	NELAC-NY12058,NJDEP-NY037		
110-82-7	Cyclohexane	ND		ug/m³	0.34	0.34	1	EPA TO-15	03/15/2025 06:10	03/15/2025 18:10	YR
								Certifications:	NELAC-NY12058,NJDEP-NY037		
124-48-1	Dibromochloromethane	ND		ug/m³	0.85	0.85	1	EPA TO-15	03/15/2025 06:10	03/15/2025 18:10	YR
								Certifications:	NELAC-NY12058,NJDEP-NY037		
75-71-8	Dichlorodifluoromethane	ND		ug/m³	0.49	0.49	1	EPA TO-15	03/15/2025 06:10	03/15/2025 18:10	YR
								Certifications:	NELAC-NY12058,NJDEP-NY037		
141-78-6	* Ethyl acetate	ND		ug/m³	0.72	0.72	1	EPA TO-15	03/15/2025 06:10	03/15/2025 18:10	YR
								Certifications:			

Sample Information

Client Sample ID: CAN 49976 / FC 19415 **York Sample ID:** 25C1102-04

York Project (SDG) No.	Client Project ID	Matrix	Collection Date/Time	Date Received
25C1102	170361307	Air	March 8, 2025 3:15 pm	03/18/2025

Volatile Organics, EPA TO15 Full List

Log-in Notes:

Sample Notes:

Sample Prepared by Method: EPA TO15 PREP

CAS No.	Parameter	Result	Flag	Units	Reported to LOD/MDL	LOQ	Dilution	Reference Method	Date/Time Prepared	Date/Time Analyzed	Analyst
100-41-4	Ethyl Benzene	ND		ug/m³	0.43	0.43	1	EPA TO-15	03/15/2025 06:10	03/15/2025 18:10	YR
								Certifications:	NELAC-NY12058,NJDEP-NY037		
87-68-3	Hexachlorobutadiene	ND		ug/m³	1.1	1.1	1	EPA TO-15	03/15/2025 06:10	03/15/2025 18:10	YR
								Certifications:	NELAC-NY12058,NJDEP-NY037		
67-63-0	**Isopropanol**	**1.1**	J	ug/m³	0.49	1.5	1	EPA TO-15	03/15/2025 06:10	03/15/2025 18:10	YR
								Certifications:	NELAC-NY12058,NJDEP-NY037		
80-62-6	Methyl Methacrylate	ND		ug/m³	0.41	0.41	1	EPA TO-15	03/15/2025 06:10	03/15/2025 18:10	YR
								Certifications:	NELAC-NY12058,NJDEP-NY037		
1634-04-4	Methyl tert-butyl ether (MTBE)	ND		ug/m³	0.36	0.36	1	EPA TO-15	03/15/2025 06:10	03/15/2025 18:10	YR
								Certifications:	NELAC-NY12058,NJDEP-NY037		
75-09-2	Methylene chloride	ND		ug/m³	0.69	2.1	1	EPA TO-15	03/15/2025 06:10	03/15/2025 18:10	YR
								Certifications:	NELAC-NY12058,NJDEP-NY037		
91-20-3	* Naphthalene	ND		ug/m³	1.0	1.0	1	EPA TO-15	03/15/2025 06:10	03/15/2025 18:10	YR
								Certifications:	NJDEP-NY037		
142-82-5	n-Heptane	ND		ug/m³	0.41	0.41	1	EPA TO-15	03/15/2025 06:10	03/15/2025 18:10	YR
								Certifications:	NELAC-NY12058,NJDEP-NY037		
110-54-3	n-Hexane	ND		ug/m³	0.35	0.35	1	EPA TO-15	03/15/2025 06:10	03/15/2025 18:10	YR
								Certifications:	NELAC-NY12058,NJDEP-NY037		
95-47-6	o-Xylene	ND		ug/m³	0.43	0.43	1	EPA TO-15	03/15/2025 06:10	03/15/2025 18:10	YR
								Certifications:	NELAC-NY12058,NJDEP-NY037		
179601-23-1	p- & m- Xylenes	ND		ug/m³	0.87	0.87	1	EPA TO-15	03/15/2025 06:10	03/15/2025 18:10	YR
								Certifications:	NELAC-NY12058,NJDEP-NY037		
622-96-8	* p-Ethyltoluene	ND		ug/m³	0.49	0.49	1	EPA TO-15	03/15/2025 06:10	03/15/2025 18:10	YR
								Certifications:			
115-07-1	* Propylene	ND		ug/m³	0.17	0.17	1	EPA TO-15	03/15/2025 06:10	03/15/2025 18:10	YR
								Certifications:			
100-42-5	Styrene	ND		ug/m³	0.43	0.43	1	EPA TO-15	03/15/2025 06:10	03/15/2025 18:10	YR
								Certifications:	NELAC-NY12058,NJDEP-NY037		
127-18-4	Tetrachloroethylene	ND		ug/m³	0.68	0.68	1	EPA TO-15	03/15/2025 06:10	03/15/2025 18:10	YR
								Certifications:	NELAC-NY12058,NJDEP-NY037		
109-99-9	* Tetrahydrofuran	ND		ug/m³	0.59	0.59	1	EPA TO-15	03/15/2025 06:10	03/15/2025 18:10	YR
								Certifications:			
108-88-3	Toluene	ND		ug/m³	0.38	0.38	1	EPA TO-15	03/15/2025 06:10	03/15/2025 18:10	YR
								Certifications:	NELAC-NY12058,NJDEP-NY037		
156-60-5	trans-1,2-Dichloroethylene	ND		ug/m³	0.40	0.40	1	EPA TO-15	03/15/2025 06:10	03/15/2025 18:10	YR
								Certifications:	NELAC-NY12058,NJDEP-NY037		
10061-02-6	trans-1,3-Dichloropropylene	ND		ug/m³	0.45	0.45	1	EPA TO-15	03/15/2025 06:10	03/15/2025 18:10	YR
								Certifications:	NELAC-NY12058,NJDEP-NY037		
79-01-6	Trichloroethylene	ND		ug/m³	0.13	0.13	1	EPA TO-15	03/15/2025 06:10	03/15/2025 18:10	YR
								Certifications:	NELAC-NY12058,NJDEP-NY037		
75-69-4	Trichlorofluoromethane (Freon 11)	ND		ug/m³	0.56	0.56	1	EPA TO-15	03/15/2025 06:10	03/15/2025 18:10	YR
								Certifications:	NELAC-NY12058,NJDEP-NY037		
108-05-4	Vinyl acetate	ND		ug/m³	0.35	0.35	1	EPA TO-15	03/15/2025 06:10	03/15/2025 18:10	YR
								Certifications:	NELAC-NY12058,NJDEP-NY037		

Sample Information

Client Sample ID: CAN 49976 / FC 19415 **York Sample ID:** 25C1102-04

York Project (SDG) No.	Client Project ID	Matrix	Collection Date/Time	Date Received
25C1102	170361307	Air	March 8, 2025 3:15 pm	03/18/2025

Volatile Organics, EPA TO15 Full List

Log-in Notes:

Sample Notes:

Sample Prepared by Method: EPA TO15 PREP

CAS No.	Parameter	Result	Flag	Units	Reported to LOD/MDL	LOQ	Dilution	Reference Method	Date/Time Prepared	Date/Time Analyzed	Analyst
593-60-2	Vinyl bromide	ND		ug/m³	0.44	0.44	1	EPA TO-15	03/15/2025 06:10	03/15/2025 18:10	YR
								Certifications:	NELAC-NY12058,NJDEP-NY037		
75-01-4	Vinyl Chloride	ND		ug/m³	0.13	0.13	1	EPA TO-15	03/15/2025 06:10	03/15/2025 18:10	YR
								Certifications:	NELAC-NY12058,NJDEP-NY037		

Sample Information

Client Sample ID: CAN 49998 / FC 20927 **York Sample ID:** 25C1102-05

York Project (SDG) No.	Client Project ID	Matrix	Collection Date/Time	Date Received
25C1102	170361307	Air	March 14, 2025 1:37 pm	03/18/2025

Volatile Organics, EPA TO15 Full List

Log-in Notes:

Sample Notes:

Sample Prepared by Method: EPA TO15 PREP

CAS No.	Parameter	Result	Flag	Units	Reported to LOD/MDL	LOQ	Dilution	Reference Method	Date/Time Prepared	Date/Time Analyzed	Analyst
630-20-6	* 1,1,1,2-Tetrachloroethane	ND		ug/m³	0.69	0.69	1	EPA TO-15	03/15/2025 06:10	03/15/2025 15:52	YR
								Certifications:			
71-55-6	1,1,1-Trichloroethane	ND		ug/m³	0.55	0.55	1	EPA TO-15	03/15/2025 06:10	03/15/2025 15:52	YR
								Certifications:	NELAC-NY12058,NJDEP-NY037		
79-34-5	1,1,2,2-Tetrachloroethane	ND		ug/m³	0.69	0.69	1	EPA TO-15	03/15/2025 06:10	03/15/2025 15:52	YR
								Certifications:	NELAC-NY12058,NJDEP-NY037		
76-13-1	1,1,2-Trichloro-1,2,2-trifluoroethane (Freon 113)	ND		ug/m³	0.77	0.77	1	EPA TO-15	03/15/2025 06:10	03/15/2025 15:52	YR
								Certifications:	NELAC-NY12058,NJDEP-NY037		
79-00-5	1,1,2-Trichloroethane	ND		ug/m³	0.55	0.55	1	EPA TO-15	03/15/2025 06:10	03/15/2025 15:52	YR
								Certifications:	NELAC-NY12058,NJDEP-NY037		
75-34-3	1,1-Dichloroethane	ND		ug/m³	0.40	0.40	1	EPA TO-15	03/15/2025 06:10	03/15/2025 15:52	YR
								Certifications:	NELAC-NY12058,NJDEP-NY037		
75-35-4	1,1-Dichloroethylene	ND		ug/m³	0.099	0.099	1	EPA TO-15	03/15/2025 06:10	03/15/2025 15:52	YR
								Certifications:	NELAC-NY12058,NJDEP-NY037		
120-82-1	1,2,4-Trichlorobenzene	ND		ug/m³	0.74	0.74	1	EPA TO-15	03/15/2025 06:10	03/15/2025 15:52	YR
								Certifications:	NELAC-NY12058,NJDEP-NY037		
95-63-6	1,2,4-Trimethylbenzene	ND		ug/m³	0.49	0.49	1	EPA TO-15	03/15/2025 06:10	03/15/2025 15:52	YR
								Certifications:	NELAC-NY12058,NJDEP-NY037		
106-93-4	1,2-Dibromoethane	ND		ug/m³	0.77	0.77	1	EPA TO-15	03/15/2025 06:10	03/15/2025 15:52	YR
								Certifications:	NELAC-NY12058,NJDEP-NY037		
95-50-1	1,2-Dichlorobenzene	ND		ug/m³	0.60	0.60	1	EPA TO-15	03/15/2025 06:10	03/15/2025 15:52	YR
								Certifications:	NELAC-NY12058,NJDEP-NY037		
107-06-2	1,2-Dichloroethane	ND		ug/m³	0.40	0.40	1	EPA TO-15	03/15/2025 06:10	03/15/2025 15:52	YR
								Certifications:	NELAC-NY12058,NJDEP-NY037		
78-87-5	1,2-Dichloropropane	ND		ug/m³	0.46	0.46	1	EPA TO-15	03/15/2025 06:10	03/15/2025 15:52	YR
								Certifications:	NELAC-NY12058,NJDEP-NY037		
76-14-2	1,2-Dichlorotetrafluoroethane	ND		ug/m³	0.70	0.70	1	EPA TO-15	03/15/2025 06:10	03/15/2025 15:52	YR
								Certifications:	NELAC-NY12058,NJDEP-NY037		
108-67-8	1,3,5-Trimethylbenzene	ND		ug/m³	0.49	0.49	1	EPA TO-15	03/15/2025 06:10	03/15/2025 15:52	YR
								Certifications:	NELAC-NY12058,NJDEP-NY037		
106-99-0	1,3-Butadiene	ND		ug/m³	0.66	0.66	1	EPA TO-15	03/15/2025 06:10	03/15/2025 15:52	YR
								Certifications:	NELAC-NY12058,NJDEP-NY037		
541-73-1	1,3-Dichlorobenzene	ND		ug/m³	0.60	0.60	1	EPA TO-15	03/15/2025 06:10	03/15/2025 15:52	YR
								Certifications:	NELAC-NY12058,NJDEP-NY037		
142-28-9	* 1,3-Dichloropropane	ND		ug/m³	0.46	0.46	1	EPA TO-15	03/15/2025 06:10	03/15/2025 15:52	YR
								Certifications:			
106-46-7	1,4-Dichlorobenzene	ND		ug/m³	0.60	0.60	1	EPA TO-15	03/15/2025 06:10	03/15/2025 15:52	YR
								Certifications:	NELAC-NY12058,NJDEP-NY037		
123-91-1	1,4-Dioxane	ND		ug/m³	0.72	0.72	1	EPA TO-15	03/15/2025 06:10	03/15/2025 15:52	YR
								Certifications:	NELAC-NY12058,NJDEP-NY037		
540-84-1	* 2,2,4-Trimethylpentane	ND		ug/m³	0.12	0.23	1	EPA TO-15	03/15/2025 06:10	03/15/2025 15:52	YR
								Certifications:			
78-93-3	2-Butanone	ND		ug/m³	0.29	0.29	1	EPA TO-15	03/15/2025 06:10	03/15/2025 15:52	YR
								Certifications:	NELAC-NY12058,NJDEP-NY037		

Sample Information

Client Sample ID: CAN 49998 / FC 20927 **York Sample ID:** 25C1102-05

York Project (SDG) No.	Client Project ID	Matrix	Collection Date/Time	Date Received
25C1102	170361307	Air	March 14, 2025 1:37 pm	03/18/2025

Volatile Organics, EPA TO15 Full List

Log-in Notes:

Sample Notes:

Sample Prepared by Method: EPA TO15 PREP

CAS No.	Parameter	Result	Flag	Units	Reported to LOD/MDL	LOQ	Dilution	Reference Method	Date/Time Prepared	Date/Time Analyzed	Analyst
591-78-6	* 2-Hexanone	ND		ug/m³	0.82	0.82	1	EPA TO-15	03/15/2025 06:10	03/15/2025 15:52	YR
								Certifications:			
107-05-1	3-Chloropropene	ND		ug/m³	1.6	1.6	1	EPA TO-15	03/15/2025 06:10	03/15/2025 15:52	YR
								Certifications:	NELAC-NY12058,NJDEP-NY037		
108-10-1	4-Methyl-2-pentanone	ND		ug/m³	0.41	0.41	1	EPA TO-15	03/15/2025 06:10	03/15/2025 15:52	YR
								Certifications:	NELAC-NY12058,NJDEP-NY037		
67-64-1	Acetone	ND		ug/m³	0.48	1.9	1	EPA TO-15	03/15/2025 06:10	03/15/2025 15:52	YR
								Certifications:	NELAC-NY12058,NJDEP-NY037		
107-13-1	Acrylonitrile	ND		ug/m³	0.22	2.8	1	EPA TO-15	03/15/2025 06:10	03/15/2025 15:52	YR
								Certifications:	NELAC-NY12058,NJDEP-NY037		
71-43-2	Benzene	ND		ug/m³	0.32	0.32	1	EPA TO-15	03/15/2025 06:10	03/15/2025 15:52	YR
								Certifications:	NELAC-NY12058,NJDEP-NY037		
100-44-7	Benzyl chloride	ND		ug/m³	0.52	0.52	1	EPA TO-15	03/15/2025 06:10	03/15/2025 15:52	YR
								Certifications:	NELAC-NY12058,NJDEP-NY037		
75-27-4	Bromodichloromethane	ND		ug/m³	0.67	0.67	1	EPA TO-15	03/15/2025 06:10	03/15/2025 15:52	YR
								Certifications:	NELAC-NY12058,NJDEP-NY037		
75-25-2	Bromoform	ND		ug/m³	1.0	1.0	1	EPA TO-15	03/15/2025 06:10	03/15/2025 15:52	YR
								Certifications:	NELAC-NY12058,NJDEP-NY037		
74-83-9	Bromomethane	ND		ug/m³	0.39	0.39	1	EPA TO-15	03/15/2025 06:10	03/15/2025 15:52	YR
								Certifications:	NELAC-NY12058,NJDEP-NY037		
75-15-0	Carbon disulfide	ND		ug/m³	0.31	0.31	1	EPA TO-15	03/15/2025 06:10	03/15/2025 15:52	YR
								Certifications:	NELAC-NY12058,NJDEP-NY037		
56-23-5	Carbon tetrachloride	ND		ug/m³	0.16	0.16	1	EPA TO-15	03/15/2025 06:10	03/15/2025 15:52	YR
								Certifications:	NELAC-NY12058,NJDEP-NY037		
108-90-7	Chlorobenzene	ND		ug/m³	0.46	0.46	1	EPA TO-15	03/15/2025 06:10	03/15/2025 15:52	YR
								Certifications:	NELAC-NY12058,NJDEP-NY037		
75-00-3	Chloroethane	ND		ug/m³	0.26	0.26	1	EPA TO-15	03/15/2025 06:10	03/15/2025 15:52	YR
								Certifications:	NELAC-NY12058,NJDEP-NY037		
67-66-3	Chloroform	ND		ug/m³	0.49	0.49	1	EPA TO-15	03/15/2025 06:10	03/15/2025 15:52	YR
								Certifications:	NELAC-NY12058,NJDEP-NY037		
74-87-3	Chloromethane	ND		ug/m³	0.21	0.21	1	EPA TO-15	03/15/2025 06:10	03/15/2025 15:52	YR
								Certifications:	NELAC-NY12058,NJDEP-NY037		
156-59-2	cis-1,2-Dichloroethylene	ND		ug/m³	0.099	0.099	1	EPA TO-15	03/15/2025 06:10	03/15/2025 15:52	YR
								Certifications:	NELAC-NY12058,NJDEP-NY037		
10061-01-5	cis-1,3-Dichloropropylene	ND		ug/m³	0.45	0.45	1	EPA TO-15	03/15/2025 06:10	03/15/2025 15:52	YR
								Certifications:	NELAC-NY12058,NJDEP-NY037		
110-82-7	Cyclohexane	ND		ug/m³	0.34	0.34	1	EPA TO-15	03/15/2025 06:10	03/15/2025 15:52	YR
								Certifications:	NELAC-NY12058,NJDEP-NY037		
124-48-1	Dibromochloromethane	ND		ug/m³	0.85	0.85	1	EPA TO-15	03/15/2025 06:10	03/15/2025 15:52	YR
								Certifications:	NELAC-NY12058,NJDEP-NY037		
75-71-8	Dichlorodifluoromethane	ND		ug/m³	0.49	0.49	1	EPA TO-15	03/15/2025 06:10	03/15/2025 15:52	YR
								Certifications:	NELAC-NY12058,NJDEP-NY037		
141-78-6	* Ethyl acetate	ND		ug/m³	0.72	0.72	1	EPA TO-15	03/15/2025 06:10	03/15/2025 15:52	YR
								Certifications:			

Sample Information

Client Sample ID: CAN 49998 / FC 20927 **York Sample ID:** 25C1102-05

York Project (SDG) No.	Client Project ID	Matrix	Collection Date/Time	Date Received
25C1102	170361307	Air	March 14, 2025 1:37 pm	03/18/2025

Volatile Organics, EPA TO15 Full List **Log-in Notes:** **Sample Notes:**

Sample Prepared by Method: EPA TO15 PREP

CAS No.	Parameter	Result	Flag	Units	Reported to LOD/MDL	LOQ	Dilution	Reference Method	Date/Time Prepared	Date/Time Analyzed	Analyst
100-41-4	Ethyl Benzene	ND		ug/m³	0.43	0.43	1	EPA TO-15	03/15/2025 06:10	03/15/2025 15:52	YR
								Certifications:	NELAC-NY12058,NJDEP-NY037		
87-68-3	Hexachlorobutadiene	ND		ug/m³	1.1	1.1	1	EPA TO-15	03/15/2025 06:10	03/15/2025 15:52	YR
								Certifications:	NELAC-NY12058,NJDEP-NY037		
67-63-0	**Isopropanol**	**1.2**	J	ug/m³	0.49	1.5	1	EPA TO-15	03/15/2025 06:10	03/15/2025 15:52	YR
								Certifications:	NELAC-NY12058,NJDEP-NY037		
80-62-6	Methyl Methacrylate	ND		ug/m³	0.41	0.41	1	EPA TO-15	03/15/2025 06:10	03/15/2025 15:52	YR
								Certifications:	NELAC-NY12058,NJDEP-NY037		
1634-04-4	Methyl tert-butyl ether (MTBE)	ND		ug/m³	0.36	0.36	1	EPA TO-15	03/15/2025 06:10	03/15/2025 15:52	YR
								Certifications:	NELAC-NY12058,NJDEP-NY037		
75-09-2	Methylene chloride	ND		ug/m³	0.69	2.1	1	EPA TO-15	03/15/2025 06:10	03/15/2025 15:52	YR
								Certifications:	NELAC-NY12058,NJDEP-NY037		
91-20-3	* Naphthalene	ND		ug/m³	1.0	1.0	1	EPA TO-15	03/15/2025 06:10	03/15/2025 15:52	YR
								Certifications:	NJDEP-NY037		
142-82-5	n-Heptane	ND		ug/m³	0.41	0.41	1	EPA TO-15	03/15/2025 06:10	03/15/2025 15:52	YR
								Certifications:	NELAC-NY12058,NJDEP-NY037		
110-54-3	n-Hexane	ND		ug/m³	0.35	0.35	1	EPA TO-15	03/15/2025 06:10	03/15/2025 15:52	YR
								Certifications:	NELAC-NY12058,NJDEP-NY037		
95-47-6	o-Xylene	ND		ug/m³	0.43	0.43	1	EPA TO-15	03/15/2025 06:10	03/15/2025 15:52	YR
								Certifications:	NELAC-NY12058,NJDEP-NY037		
179601-23-1	p- & m- Xylenes	ND		ug/m³	0.87	0.87	1	EPA TO-15	03/15/2025 06:10	03/15/2025 15:52	YR
								Certifications:	NELAC-NY12058,NJDEP-NY037		
622-96-8	* p-Ethyltoluene	ND		ug/m³	0.49	0.49	1	EPA TO-15	03/15/2025 06:10	03/15/2025 15:52	YR
								Certifications:			
115-07-1	* Propylene	ND		ug/m³	0.17	0.17	1	EPA TO-15	03/15/2025 06:10	03/15/2025 15:52	YR
								Certifications:			
100-42-5	Styrene	ND		ug/m³	0.43	0.43	1	EPA TO-15	03/15/2025 06:10	03/15/2025 15:52	YR
								Certifications:	NELAC-NY12058,NJDEP-NY037		
127-18-4	Tetrachloroethylene	ND		ug/m³	0.68	0.68	1	EPA TO-15	03/15/2025 06:10	03/15/2025 15:52	YR
								Certifications:	NELAC-NY12058,NJDEP-NY037		
109-99-9	* Tetrahydrofuran	ND		ug/m³	0.59	0.59	1	EPA TO-15	03/15/2025 06:10	03/15/2025 15:52	YR
								Certifications:			
108-88-3	Toluene	ND		ug/m³	0.38	0.38	1	EPA TO-15	03/15/2025 06:10	03/15/2025 15:52	YR
								Certifications:	NELAC-NY12058,NJDEP-NY037		
156-60-5	trans-1,2-Dichloroethylene	ND		ug/m³	0.40	0.40	1	EPA TO-15	03/15/2025 06:10	03/15/2025 15:52	YR
								Certifications:	NELAC-NY12058,NJDEP-NY037		
10061-02-6	trans-1,3-Dichloropropylene	ND		ug/m³	0.45	0.45	1	EPA TO-15	03/15/2025 06:10	03/15/2025 15:52	YR
								Certifications:	NELAC-NY12058,NJDEP-NY037		
79-01-6	Trichloroethylene	ND		ug/m³	0.13	0.13	1	EPA TO-15	03/15/2025 06:10	03/15/2025 15:52	YR
								Certifications:	NELAC-NY12058,NJDEP-NY037		
75-69-4	Trichlorofluoromethane (Freon 11)	ND		ug/m³	0.56	0.56	1	EPA TO-15	03/15/2025 06:10	03/15/2025 15:52	YR
								Certifications:	NELAC-NY12058,NJDEP-NY037		
108-05-4	Vinyl acetate	ND		ug/m³	0.35	0.35	1	EPA TO-15	03/15/2025 06:10	03/15/2025 15:52	YR
								Certifications:	NELAC-NY12058,NJDEP-NY037		

Sample Information

Client Sample ID: CAN 49998 / FC 20927 **York Sample ID:** 25C1102-05

York Project (SDG) No.	Client Project ID	Matrix	Collection Date/Time	Date Received
25C1102	170361307	Air	March 14, 2025 1:37 pm	03/18/2025

Volatile Organics, EPA TO15 Full List

Log-in Notes:

Sample Notes:

Sample Prepared by Method: EPA TO15 PREP

CAS No.	Parameter	Result	Flag	Units	Reported to LOD/MDL	LOQ	Dilution	Reference Method	Date/Time Prepared	Date/Time Analyzed	Analyst
593-60-2	Vinyl bromide	ND		ug/m³	0.44	0.44	1	EPA TO-15	03/15/2025 06:10	03/15/2025 15:52	YR
								Certifications:	NELAC-NY12058,NJDEP-NY037		
75-01-4	Vinyl Chloride	ND		ug/m³	0.13	0.13	1	EPA TO-15	03/15/2025 06:10	03/15/2025 15:52	YR
								Certifications:	NELAC-NY12058,NJDEP-NY037		

Sample Information

Client Sample ID: CAN 34501 / FC 17190 **York Sample ID:** 25C1102-06

York Project (SDG) No.	Client Project ID	Matrix	Collection Date/Time	Date Received
25C1102	170361307	Air	March 13, 2025 1:37 pm	03/18/2025

Volatile Organics, EPA TO15 Full List

Log-in Notes:

Sample Notes:

Sample Prepared by Method: EPA TO15 PREP

CAS No.	Parameter	Result	Flag	Units	Reported to LOD/MDL	LOQ	Dilution	Reference Method	Date/Time Prepared	Date/Time Analyzed	Analyst
630-20-6	* 1,1,1,2-Tetrachloroethane	ND		ug/m³	0.69	0.69	1	EPA TO-15	03/15/2025 06:10	03/15/2025 15:06	YR
								Certifications:			
71-55-6	1,1,1-Trichloroethane	ND		ug/m³	0.55	0.55	1	EPA TO-15	03/15/2025 06:10	03/15/2025 15:06	YR
								Certifications:	NELAC-NY12058,NJDEP-NY037		
79-34-5	1,1,2,2-Tetrachloroethane	ND		ug/m³	0.69	0.69	1	EPA TO-15	03/15/2025 06:10	03/15/2025 15:06	YR
								Certifications:	NELAC-NY12058,NJDEP-NY037		
76-13-1	1,1,2-Trichloro-1,2,2-trifluoroethane (Freon 113)	ND		ug/m³	0.77	0.77	1	EPA TO-15	03/15/2025 06:10	03/15/2025 15:06	YR
								Certifications:	NELAC-NY12058,NJDEP-NY037		
79-00-5	1,1,2-Trichloroethane	ND		ug/m³	0.55	0.55	1	EPA TO-15	03/15/2025 06:10	03/15/2025 15:06	YR
								Certifications:	NELAC-NY12058,NJDEP-NY037		
75-34-3	1,1-Dichloroethane	ND		ug/m³	0.40	0.40	1	EPA TO-15	03/15/2025 06:10	03/15/2025 15:06	YR
								Certifications:	NELAC-NY12058,NJDEP-NY037		
75-35-4	1,1-Dichloroethylene	ND		ug/m³	0.099	0.099	1	EPA TO-15	03/15/2025 06:10	03/15/2025 15:06	YR
								Certifications:	NELAC-NY12058,NJDEP-NY037		
120-82-1	1,2,4-Trichlorobenzene	ND		ug/m³	0.74	0.74	1	EPA TO-15	03/15/2025 06:10	03/15/2025 15:06	YR
								Certifications:	NELAC-NY12058,NJDEP-NY037		
95-63-6	1,2,4-Trimethylbenzene	ND		ug/m³	0.49	0.49	1	EPA TO-15	03/15/2025 06:10	03/15/2025 15:06	YR
								Certifications:	NELAC-NY12058,NJDEP-NY037		
106-93-4	1,2-Dibromoethane	ND		ug/m³	0.77	0.77	1	EPA TO-15	03/15/2025 06:10	03/15/2025 15:06	YR
								Certifications:	NELAC-NY12058,NJDEP-NY037		
95-50-1	1,2-Dichlorobenzene	ND		ug/m³	0.60	0.60	1	EPA TO-15	03/15/2025 06:10	03/15/2025 15:06	YR
								Certifications:	NELAC-NY12058,NJDEP-NY037		
107-06-2	1,2-Dichloroethane	ND		ug/m³	0.40	0.40	1	EPA TO-15	03/15/2025 06:10	03/15/2025 15:06	YR
								Certifications:	NELAC-NY12058,NJDEP-NY037		
78-87-5	1,2-Dichloropropane	ND		ug/m³	0.46	0.46	1	EPA TO-15	03/15/2025 06:10	03/15/2025 15:06	YR
								Certifications:	NELAC-NY12058,NJDEP-NY037		
76-14-2	1,2-Dichlorotetrafluoroethane	ND		ug/m³	0.70	0.70	1	EPA TO-15	03/15/2025 06:10	03/15/2025 15:06	YR
								Certifications:	NELAC-NY12058,NJDEP-NY037		
108-67-8	1,3,5-Trimethylbenzene	ND		ug/m³	0.49	0.49	1	EPA TO-15	03/15/2025 06:10	03/15/2025 15:06	YR
								Certifications:	NELAC-NY12058,NJDEP-NY037		
106-99-0	1,3-Butadiene	ND		ug/m³	0.66	0.66	1	EPA TO-15	03/15/2025 06:10	03/15/2025 15:06	YR
								Certifications:	NELAC-NY12058,NJDEP-NY037		
541-73-1	1,3-Dichlorobenzene	ND		ug/m³	0.60	0.60	1	EPA TO-15	03/15/2025 06:10	03/15/2025 15:06	YR
								Certifications:	NELAC-NY12058,NJDEP-NY037		
142-28-9	* 1,3-Dichloropropane	ND		ug/m³	0.46	0.46	1	EPA TO-15	03/15/2025 06:10	03/15/2025 15:06	YR
								Certifications:			
106-46-7	1,4-Dichlorobenzene	ND		ug/m³	0.60	0.60	1	EPA TO-15	03/15/2025 06:10	03/15/2025 15:06	YR
								Certifications:	NELAC-NY12058,NJDEP-NY037		
123-91-1	1,4-Dioxane	ND		ug/m³	0.72	0.72	1	EPA TO-15	03/15/2025 06:10	03/15/2025 15:06	YR
								Certifications:	NELAC-NY12058,NJDEP-NY037		
540-84-1	* 2,2,4-Trimethylpentane	ND		ug/m³	0.12	0.23	1	EPA TO-15	03/15/2025 06:10	03/15/2025 15:06	YR
								Certifications:			
78-93-3	2-Butanone	ND		ug/m³	0.29	0.29	1	EPA TO-15	03/15/2025 06:10	03/15/2025 15:06	YR
								Certifications:	NELAC-NY12058,NJDEP-NY037		

Sample Information

Client Sample ID: CAN 34501 / FC 17190 **York Sample ID:** 25C1102-06

York Project (SDG) No.	Client Project ID	Matrix	Collection Date/Time	Date Received
25C1102	170361307	Air	March 13, 2025 1:37 pm	03/18/2025

Volatile Organics, EPA TO15 Full List

Log-in Notes:

Sample Notes:

Sample Prepared by Method: EPA TO15 PREP

CAS No.	Parameter	Result	Flag	Units	Reported to LOD/MDL	LOQ	Dilution	Reference Method	Date/Time Prepared	Date/Time Analyzed	Analyst
591-78-6	* 2-Hexanone	ND		ug/m³	0.82	0.82	1	EPA TO-15	03/15/2025 06:10	03/15/2025 15:06	YR
								Certifications:			
107-05-1	3-Chloropropene	ND		ug/m³	1.6	1.6	1	EPA TO-15	03/15/2025 06:10	03/15/2025 15:06	YR
								Certifications:	NELAC-NY12058,NJDEP-NY037		
108-10-1	4-Methyl-2-pentanone	ND		ug/m³	0.41	0.41	1	EPA TO-15	03/15/2025 06:10	03/15/2025 15:06	YR
								Certifications:	NELAC-NY12058,NJDEP-NY037		
67-64-1	Acetone	ND		ug/m³	0.48	1.9	1	EPA TO-15	03/15/2025 06:10	03/15/2025 15:06	YR
								Certifications:	NELAC-NY12058,NJDEP-NY037		
107-13-1	Acrylonitrile	ND		ug/m³	0.22	2.8	1	EPA TO-15	03/15/2025 06:10	03/15/2025 15:06	YR
								Certifications:	NELAC-NY12058,NJDEP-NY037		
71-43-2	Benzene	ND		ug/m³	0.32	0.32	1	EPA TO-15	03/15/2025 06:10	03/15/2025 15:06	YR
								Certifications:	NELAC-NY12058,NJDEP-NY037		
100-44-7	Benzyl chloride	ND		ug/m³	0.52	0.52	1	EPA TO-15	03/15/2025 06:10	03/15/2025 15:06	YR
								Certifications:	NELAC-NY12058,NJDEP-NY037		
75-27-4	Bromodichloromethane	ND		ug/m³	0.67	0.67	1	EPA TO-15	03/15/2025 06:10	03/15/2025 15:06	YR
								Certifications:	NELAC-NY12058,NJDEP-NY037		
75-25-2	Bromoform	ND		ug/m³	1.0	1.0	1	EPA TO-15	03/15/2025 06:10	03/15/2025 15:06	YR
								Certifications:	NELAC-NY12058,NJDEP-NY037		
74-83-9	Bromomethane	ND		ug/m³	0.39	0.39	1	EPA TO-15	03/15/2025 06:10	03/15/2025 15:06	YR
								Certifications:	NELAC-NY12058,NJDEP-NY037		
75-15-0	Carbon disulfide	ND		ug/m³	0.31	0.31	1	EPA TO-15	03/15/2025 06:10	03/15/2025 15:06	YR
								Certifications:	NELAC-NY12058,NJDEP-NY037		
56-23-5	Carbon tetrachloride	ND		ug/m³	0.16	0.16	1	EPA TO-15	03/15/2025 06:10	03/15/2025 15:06	YR
								Certifications:	NELAC-NY12058,NJDEP-NY037		
108-90-7	Chlorobenzene	ND		ug/m³	0.46	0.46	1	EPA TO-15	03/15/2025 06:10	03/15/2025 15:06	YR
								Certifications:	NELAC-NY12058,NJDEP-NY037		
75-00-3	Chloroethane	ND		ug/m³	0.26	0.26	1	EPA TO-15	03/15/2025 06:10	03/15/2025 15:06	YR
								Certifications:	NELAC-NY12058,NJDEP-NY037		
67-66-3	Chloroform	ND		ug/m³	0.49	0.49	1	EPA TO-15	03/15/2025 06:10	03/15/2025 15:06	YR
								Certifications:	NELAC-NY12058,NJDEP-NY037		
74-87-3	Chloromethane	ND		ug/m³	0.21	0.21	1	EPA TO-15	03/15/2025 06:10	03/15/2025 15:06	YR
								Certifications:	NELAC-NY12058,NJDEP-NY037		
156-59-2	cis-1,2-Dichloroethylene	ND		ug/m³	0.099	0.099	1	EPA TO-15	03/15/2025 06:10	03/15/2025 15:06	YR
								Certifications:	NELAC-NY12058,NJDEP-NY037		
10061-01-5	cis-1,3-Dichloropropylene	ND		ug/m³	0.45	0.45	1	EPA TO-15	03/15/2025 06:10	03/15/2025 15:06	YR
								Certifications:	NELAC-NY12058,NJDEP-NY037		
110-82-7	Cyclohexane	ND		ug/m³	0.34	0.34	1	EPA TO-15	03/15/2025 06:10	03/15/2025 15:06	YR
								Certifications:	NELAC-NY12058,NJDEP-NY037		
124-48-1	Dibromochloromethane	ND		ug/m³	0.85	0.85	1	EPA TO-15	03/15/2025 06:10	03/15/2025 15:06	YR
								Certifications:	NELAC-NY12058,NJDEP-NY037		
75-71-8	Dichlorodifluoromethane	ND		ug/m³	0.49	0.49	1	EPA TO-15	03/15/2025 06:10	03/15/2025 15:06	YR
								Certifications:	NELAC-NY12058,NJDEP-NY037		
141-78-6	* Ethyl acetate	ND		ug/m³	0.72	0.72	1	EPA TO-15	03/15/2025 06:10	03/15/2025 15:06	YR
								Certifications:			

Sample Information

Client Sample ID: CAN 34501 / FC 17190 **York Sample ID:** 25C1102-06

York Project (SDG) No.	Client Project ID	Matrix	Collection Date/Time	Date Received
25C1102	170361307	Air	March 13, 2025 1:37 pm	03/18/2025

Volatile Organics, EPA TO15 Full List

Log-in Notes:

Sample Notes:

Sample Prepared by Method: EPA TO15 PREP

CAS No.	Parameter	Result	Flag	Units	Reported to LOD/MDL	LOQ	Dilution	Reference Method	Date/Time Prepared	Date/Time Analyzed	Analyst
100-41-4	Ethyl Benzene	ND		ug/m³	0.43	0.43	1	EPA TO-15	03/15/2025 06:10	03/15/2025 15:06	YR
								Certifications:	NELAC-NY12058,NJDEP-NY037		
87-68-3	Hexachlorobutadiene	ND		ug/m³	1.1	1.1	1	EPA TO-15	03/15/2025 06:10	03/15/2025 15:06	YR
								Certifications:	NELAC-NY12058,NJDEP-NY037		
67-63-0	**Isopropanol**	**1.2**	J	ug/m³	0.49	1.5	1	EPA TO-15	03/15/2025 06:10	03/15/2025 15:06	YR
								Certifications:	NELAC-NY12058,NJDEP-NY037		
80-62-6	Methyl Methacrylate	ND		ug/m³	0.41	0.41	1	EPA TO-15	03/15/2025 06:10	03/15/2025 15:06	YR
								Certifications:	NELAC-NY12058,NJDEP-NY037		
1634-04-4	Methyl tert-butyl ether (MTBE)	ND		ug/m³	0.36	0.36	1	EPA TO-15	03/15/2025 06:10	03/15/2025 15:06	YR
								Certifications:	NELAC-NY12058,NJDEP-NY037		
75-09-2	Methylene chloride	ND		ug/m³	0.69	2.1	1	EPA TO-15	03/15/2025 06:10	03/15/2025 15:06	YR
								Certifications:	NELAC-NY12058,NJDEP-NY037		
91-20-3	* Naphthalene	ND		ug/m³	1.0	1.0	1	EPA TO-15	03/15/2025 06:10	03/15/2025 15:06	YR
								Certifications:	NJDEP-NY037		
142-82-5	n-Heptane	ND		ug/m³	0.41	0.41	1	EPA TO-15	03/15/2025 06:10	03/15/2025 15:06	YR
								Certifications:	NELAC-NY12058,NJDEP-NY037		
110-54-3	n-Hexane	ND		ug/m³	0.35	0.35	1	EPA TO-15	03/15/2025 06:10	03/15/2025 15:06	YR
								Certifications:	NELAC-NY12058,NJDEP-NY037		
95-47-6	o-Xylene	ND		ug/m³	0.43	0.43	1	EPA TO-15	03/15/2025 06:10	03/15/2025 15:06	YR
								Certifications:	NELAC-NY12058,NJDEP-NY037		
179601-23-1	p- & m- Xylenes	ND		ug/m³	0.87	0.87	1	EPA TO-15	03/15/2025 06:10	03/15/2025 15:06	YR
								Certifications:	NELAC-NY12058,NJDEP-NY037		
622-96-8	* p-Ethyltoluene	ND		ug/m³	0.49	0.49	1	EPA TO-15	03/15/2025 06:10	03/15/2025 15:06	YR
								Certifications:			
115-07-1	* Propylene	ND		ug/m³	0.17	0.17	1	EPA TO-15	03/15/2025 06:10	03/15/2025 15:06	YR
								Certifications:			
100-42-5	Styrene	ND		ug/m³	0.43	0.43	1	EPA TO-15	03/15/2025 06:10	03/15/2025 15:06	YR
								Certifications:	NELAC-NY12058,NJDEP-NY037		
127-18-4	Tetrachloroethylene	ND		ug/m³	0.68	0.68	1	EPA TO-15	03/15/2025 06:10	03/15/2025 15:06	YR
								Certifications:	NELAC-NY12058,NJDEP-NY037		
109-99-9	* Tetrahydrofuran	ND		ug/m³	0.59	0.59	1	EPA TO-15	03/15/2025 06:10	03/15/2025 15:06	YR
								Certifications:			
108-88-3	Toluene	ND		ug/m³	0.38	0.38	1	EPA TO-15	03/15/2025 06:10	03/15/2025 15:06	YR
								Certifications:	NELAC-NY12058,NJDEP-NY037		
156-60-5	trans-1,2-Dichloroethylene	ND		ug/m³	0.40	0.40	1	EPA TO-15	03/15/2025 06:10	03/15/2025 15:06	YR
								Certifications:	NELAC-NY12058,NJDEP-NY037		
10061-02-6	trans-1,3-Dichloropropylene	ND		ug/m³	0.45	0.45	1	EPA TO-15	03/15/2025 06:10	03/15/2025 15:06	YR
								Certifications:	NELAC-NY12058,NJDEP-NY037		
79-01-6	Trichloroethylene	ND		ug/m³	0.13	0.13	1	EPA TO-15	03/15/2025 06:10	03/15/2025 15:06	YR
								Certifications:	NELAC-NY12058,NJDEP-NY037		
75-69-4	Trichlorofluoromethane (Freon 11)	ND		ug/m³	0.56	0.56	1	EPA TO-15	03/15/2025 06:10	03/15/2025 15:06	YR
								Certifications:	NELAC-NY12058,NJDEP-NY037		
108-05-4	Vinyl acetate	ND		ug/m³	0.35	0.35	1	EPA TO-15	03/15/2025 06:10	03/15/2025 15:06	YR
								Certifications:	NELAC-NY12058,NJDEP-NY037		

Sample Information

Client Sample ID: CAN 34501 / FC 17190 **York Sample ID:** 25C1102-06

York Project (SDG) No.	Client Project ID	Matrix	Collection Date/Time	Date Received
25C1102	170361307	Air	March 13, 2025 1:37 pm	03/18/2025

Volatile Organics, EPA TO15 Full List

Log-in Notes:

Sample Notes:

Sample Prepared by Method: EPA TO15 PREP

CAS No.	Parameter	Result	Flag	Units	Reported to LOD/MDL	LOQ	Dilution	Reference Method	Date/Time Prepared	Date/Time Analyzed	Analyst
593-60-2	Vinyl bromide	ND		ug/m³	0.44	0.44	1	EPA TO-15	03/15/2025 06:10	03/15/2025 15:06	YR
								Certifications:	NELAC-NY12058,NJDEP-NY037		
75-01-4	Vinyl Chloride	ND		ug/m³	0.13	0.13	1	EPA TO-15	03/15/2025 06:10	03/15/2025 15:06	YR
								Certifications:	NELAC-NY12058,NJDEP-NY037		

Sample Information

Client Sample ID: IA01_032025 **York Sample ID:** 25C1275-01

York Project (SDG) No.	Client Project ID	Matrix	Collection Date/Time	Date Received
25C1275	170361307	Indoor Ambient Air	March 20, 2025 7:40 am	03/20/2025

Volatile Organics, EPA TO15 Full List

Log-in Notes:

Sample Notes:

Sample Prepared by Method: EPA TO15 PREP

CAS No.	Parameter	Result	Flag	Units	Reported to LOD/MDL	LOQ	Dilution	Reference Method	Date/Time Prepared	Date/Time Analyzed	Analyst
630-20-6	* 1,1,1,2-Tetrachloroethane	ND		ug/m³	0.60	0.60	0.871	EPA TO-15 Certifications:	03/20/2025 16:20	03/20/2025 17:11	YR
71-55-6	1,1,1-Trichloroethane	ND		ug/m³	0.48	0.48	0.871	EPA TO-15 Certifications: NELAC-NY12058,NJDEP-NY037	03/20/2025 16:20	03/20/2025 17:11	YR
79-34-5	1,1,2,2-Tetrachloroethane	ND		ug/m³	0.60	0.60	0.871	EPA TO-15 Certifications: NELAC-NY12058,NJDEP-NY037	03/20/2025 16:20	03/20/2025 17:11	YR
76-13-1	1,1,2-Trichloro-1,2,2-trifluoroethane (Freon 113)	ND		ug/m³	0.67	0.67	0.871	EPA TO-15 Certifications: NELAC-NY12058,NJDEP-NY037	03/20/2025 16:20	03/20/2025 17:11	YR
79-00-5	1,1,2-Trichloroethane	ND		ug/m³	0.48	0.48	0.871	EPA TO-15 Certifications: NELAC-NY12058,NJDEP-NY037	03/20/2025 16:20	03/20/2025 17:11	YR
75-34-3	1,1-Dichloroethane	ND		ug/m³	0.35	0.35	0.871	EPA TO-15 Certifications: NELAC-NY12058,NJDEP-NY037	03/20/2025 16:20	03/20/2025 17:11	YR
75-35-4	1,1-Dichloroethylene	ND		ug/m³	0.086	0.086	0.871	EPA TO-15 Certifications: NELAC-NY12058,NJDEP-NY037	03/20/2025 16:20	03/20/2025 17:11	YR
120-82-1	1,2,4-Trichlorobenzene	ND	TO-CCV	ug/m³	0.65	0.65	0.871	EPA TO-15 Certifications: NELAC-NY12058,NJDEP-NY037	03/20/2025 16:20	03/20/2025 17:11	YR
95-63-6	**1,2,4-Trimethylbenzene**	**2.8**		ug/m³	0.43	0.43	0.871	EPA TO-15 Certifications: NELAC-NY12058,NJDEP-NY037	03/20/2025 16:20	03/20/2025 17:11	YR
106-93-4	1,2-Dibromoethane	ND		ug/m³	0.67	0.67	0.871	EPA TO-15 Certifications: NELAC-NY12058,NJDEP-NY037	03/20/2025 16:20	03/20/2025 17:11	YR
95-50-1	1,2-Dichlorobenzene	ND		ug/m³	0.52	0.52	0.871	EPA TO-15 Certifications: NELAC-NY12058,NJDEP-NY037	03/20/2025 16:20	03/20/2025 17:11	YR
107-06-2	1,2-Dichloroethane	ND		ug/m³	0.35	0.35	0.871	EPA TO-15 Certifications: NELAC-NY12058,NJDEP-NY037	03/20/2025 16:20	03/20/2025 17:11	YR
78-87-5	1,2-Dichloropropane	ND		ug/m³	0.40	0.40	0.871	EPA TO-15 Certifications: NELAC-NY12058,NJDEP-NY037	03/20/2025 16:20	03/20/2025 17:11	YR
76-14-2	1,2-Dichlorotetrafluoroethane	ND		ug/m³	0.61	0.61	0.871	EPA TO-15 Certifications: NELAC-NY12058,NJDEP-NY037	03/20/2025 16:20	03/20/2025 17:11	YR
108-67-8	**1,3,5-Trimethylbenzene**	**0.77**		ug/m³	0.43	0.43	0.871	EPA TO-15 Certifications: NELAC-NY12058,NJDEP-NY037	03/20/2025 16:20	03/20/2025 17:11	YR
106-99-0	1,3-Butadiene	ND		ug/m³	0.58	0.58	0.871	EPA TO-15 Certifications: NELAC-NY12058,NJDEP-NY037	03/20/2025 16:20	03/20/2025 17:11	YR
541-73-1	1,3-Dichlorobenzene	ND		ug/m³	0.52	0.52	0.871	EPA TO-15 Certifications: NELAC-NY12058,NJDEP-NY037	03/20/2025 16:20	03/20/2025 17:11	YR
142-28-9	* 1,3-Dichloropropane	ND		ug/m³	0.40	0.40	0.871	EPA TO-15 Certifications:	03/20/2025 16:20	03/20/2025 17:11	YR
106-46-7	1,4-Dichlorobenzene	ND		ug/m³	0.52	0.52	0.871	EPA TO-15 Certifications: NELAC-NY12058,NJDEP-NY037	03/20/2025 16:20	03/20/2025 17:11	YR
123-91-1	1,4-Dioxane	ND		ug/m³	0.63	0.63	0.871	EPA TO-15 Certifications: NELAC-NY12058,NJDEP-NY037	03/20/2025 16:20	03/20/2025 17:11	YR
540-84-1	* **2,2,4-Trimethylpentane**	**0.33**		ug/m³	0.10	0.20	0.871	EPA TO-15 Certifications:	03/20/2025 16:20	03/20/2025 17:11	YR

Sample Information

Client Sample ID: IA01_032025 **York Sample ID:** 25C1275-01

York Project (SDG) No.	Client Project ID	Matrix	Collection Date/Time	Date Received
25C1275	170361307	Indoor Ambient Air	March 20, 2025 7:40 am	03/20/2025

Volatile Organics, EPA TO15 Full List

Log-in Notes:

Sample Notes:

Sample Prepared by Method: EPA TO15 PREP

CAS No.	Parameter	Result	Flag	Units	Reported to LOD/MDL	LOQ	Dilution	Reference Method	Date/Time Prepared	Date/Time Analyzed	Analyst
78-93-3	**2-Butanone**	**1.1**		ug/m³	0.26	0.26	0.871	EPA TO-15	03/20/2025 16:20	03/20/2025 17:11	YR
								Certifications:	NELAC-NY12058,NJDEP-NY037		
591-78-6	* 2-Hexanone	ND		ug/m³	0.71	0.71	0.871	EPA TO-15	03/20/2025 16:20	03/20/2025 17:11	YR
								Certifications:			
107-05-1	3-Chloropropene	ND		ug/m³	1.4	1.4	0.871	EPA TO-15	03/20/2025 16:20	03/20/2025 17:11	YR
								Certifications:	NELAC-NY12058,NJDEP-NY037		
108-10-1	**4-Methyl-2-pentanone**	**0.86**		ug/m³	0.36	0.36	0.871	EPA TO-15	03/20/2025 16:20	03/20/2025 17:11	YR
								Certifications:	NELAC-NY12058,NJDEP-NY037		
67-64-1	**Acetone**	**39**		ug/m³	0.41	1.7	0.871	EPA TO-15	03/20/2025 16:20	03/20/2025 17:11	YR
								Certifications:	NELAC-NY12058,NJDEP-NY037		
107-13-1	**Acrylonitrile**	**0.70**	J	ug/m³	0.19	2.5	0.871	EPA TO-15	03/20/2025 16:20	03/20/2025 17:11	YR
								Certifications:	NELAC-NY12058,NJDEP-NY037		
71-43-2	**Benzene**	**0.50**		ug/m³	0.28	0.28	0.871	EPA TO-15	03/20/2025 16:20	03/20/2025 17:11	YR
								Certifications:	NELAC-NY12058,NJDEP-NY037		
100-44-7	Benzyl chloride	ND	TO-CCV	ug/m³	0.45	0.45	0.871	EPA TO-15	03/20/2025 16:20	03/20/2025 17:11	YR
								Certifications:	NELAC-NY12058,NJDEP-NY037		
75-27-4	Bromodichloromethane	ND		ug/m³	0.58	0.58	0.871	EPA TO-15	03/20/2025 16:20	03/20/2025 17:11	YR
								Certifications:	NELAC-NY12058,NJDEP-NY037		
75-25-2	Bromoform	ND		ug/m³	0.90	0.90	0.871	EPA TO-15	03/20/2025 16:20	03/20/2025 17:11	YR
								Certifications:	NELAC-NY12058,NJDEP-NY037		
74-83-9	Bromomethane	ND		ug/m³	0.34	0.34	0.871	EPA TO-15	03/20/2025 16:20	03/20/2025 17:11	YR
								Certifications:	NELAC-NY12058,NJDEP-NY037		
75-15-0	Carbon disulfide	ND		ug/m³	0.27	0.27	0.871	EPA TO-15	03/20/2025 16:20	03/20/2025 17:11	YR
								Certifications:	NELAC-NY12058,NJDEP-NY037		
56-23-5	**Carbon tetrachloride**	**0.44**		ug/m³	0.14	0.14	0.871	EPA TO-15	03/20/2025 16:20	03/20/2025 17:11	YR
								Certifications:	NELAC-NY12058,NJDEP-NY037		
108-90-7	Chlorobenzene	ND		ug/m³	0.40	0.40	0.871	EPA TO-15	03/20/2025 16:20	03/20/2025 17:11	YR
								Certifications:	NELAC-NY12058,NJDEP-NY037		
75-00-3	Chloroethane	ND		ug/m³	0.23	0.23	0.871	EPA TO-15	03/20/2025 16:20	03/20/2025 17:11	YR
								Certifications:	NELAC-NY12058,NJDEP-NY037		
67-66-3	Chloroform	ND		ug/m³	0.43	0.43	0.871	EPA TO-15	03/20/2025 16:20	03/20/2025 17:11	YR
								Certifications:	NELAC-NY12058,NJDEP-NY037		
74-87-3	**Chloromethane**	**1.2**		ug/m³	0.18	0.18	0.871	EPA TO-15	03/20/2025 16:20	03/20/2025 17:11	YR
								Certifications:	NELAC-NY12058,NJDEP-NY037		
156-59-2	cis-1,2-Dichloroethylene	ND		ug/m³	0.086	0.086	0.871	EPA TO-15	03/20/2025 16:20	03/20/2025 17:11	YR
								Certifications:	NELAC-NY12058,NJDEP-NY037		
10061-01-5	cis-1,3-Dichloropropylene	ND		ug/m³	0.40	0.40	0.871	EPA TO-15	03/20/2025 16:20	03/20/2025 17:11	YR
								Certifications:	NELAC-NY12058,NJDEP-NY037		
110-82-7	Cyclohexane	ND		ug/m³	0.30	0.30	0.871	EPA TO-15	03/20/2025 16:20	03/20/2025 17:11	YR
								Certifications:	NELAC-NY12058,NJDEP-NY037		
124-48-1	Dibromochloromethane	ND		ug/m³	0.74	0.74	0.871	EPA TO-15	03/20/2025 16:20	03/20/2025 17:11	YR
								Certifications:	NELAC-NY12058,NJDEP-NY037		
75-71-8	**Dichlorodifluoromethane**	**2.2**		ug/m³	0.43	0.43	0.871	EPA TO-15	03/20/2025 16:20	03/20/2025 17:11	YR
								Certifications:	NELAC-NY12058,NJDEP-NY037		

Sample Information

Client Sample ID: IA01_032025 **York Sample ID:** 25C1275-01

York Project (SDG) No.	Client Project ID	Matrix	Collection Date/Time	Date Received
25C1275	170361307	Indoor Ambient Air	March 20, 2025 7:40 am	03/20/2025

Volatile Organics, EPA TO15 Full List

Log-in Notes:

Sample Notes:

Sample Prepared by Method: EPA TO15 PREP

CAS No.	Parameter	Result	Flag	Units	Reported to LOD/MDL	LOQ	Dilution	Reference Method	Date/Time Prepared	Date/Time Analyzed	Analyst
141-78-6	*** Ethyl acetate**	**10**		ug/m³	0.63	0.63	0.871	EPA TO-15	03/20/2025 16:20	03/20/2025 17:11	YR
								Certifications:			
100-41-4	**Ethyl Benzene**	**0.49**		ug/m³	0.38	0.38	0.871	EPA TO-15	03/20/2025 16:20	03/20/2025 17:11	YR
								Certifications:	NELAC-NY12058,NJDEP-NY037		
87-68-3	Hexachlorobutadiene	ND		ug/m³	0.93	0.93	0.871	EPA TO-15	03/20/2025 16:20	03/20/2025 17:11	YR
								Certifications:	NELAC-NY12058,NJDEP-NY037		
67-63-0	**Isopropanol**	**3.0**		ug/m³	0.43	1.3	0.871	EPA TO-15	03/20/2025 16:20	03/20/2025 17:11	YR
								Certifications:	NELAC-NY12058,NJDEP-NY037		
80-62-6	Methyl Methacrylate	ND		ug/m³	0.36	0.36	0.871	EPA TO-15	03/20/2025 16:20	03/20/2025 17:11	YR
								Certifications:	NELAC-NY12058,NJDEP-NY037		
1634-04-4	Methyl tert-butyl ether (MTBE)	ND		ug/m³	0.31	0.31	0.871	EPA TO-15	03/20/2025 16:20	03/20/2025 17:11	YR
								Certifications:	NELAC-NY12058,NJDEP-NY037		
75-09-2	Methylene chloride	ND		ug/m³	0.61	1.8	0.871	EPA TO-15	03/20/2025 16:20	03/20/2025 17:11	YR
								Certifications:	NELAC-NY12058,NJDEP-NY037		
91-20-3	* Naphthalene	ND		ug/m³	0.91	0.91	0.871	EPA TO-15	03/20/2025 16:20	03/20/2025 17:11	YR
								Certifications:	NJDEP-NY037		
142-82-5	n-Heptane	ND		ug/m³	0.36	0.36	0.871	EPA TO-15	03/20/2025 16:20	03/20/2025 17:11	YR
								Certifications:	NELAC-NY12058,NJDEP-NY037		
110-54-3	**n-Hexane**	**0.49**		ug/m³	0.31	0.31	0.871	EPA TO-15	03/20/2025 16:20	03/20/2025 17:11	YR
								Certifications:	NELAC-NY12058,NJDEP-NY037		
95-47-6	**o-Xylene**	**0.83**		ug/m³	0.38	0.38	0.871	EPA TO-15	03/20/2025 16:20	03/20/2025 17:11	YR
								Certifications:	NELAC-NY12058,NJDEP-NY037		
179601-23-1	**p- & m- Xylenes**	**2.0**	ICVE	ug/m³	0.76	0.76	0.871	EPA TO-15	03/20/2025 16:20	03/20/2025 17:11	YR
								Certifications:	NELAC-NY12058,NJDEP-NY037		
622-96-8	*** p-Ethyltoluene**	**1.6**		ug/m³	0.43	0.43	0.871	EPA TO-15	03/20/2025 16:20	03/20/2025 17:11	YR
								Certifications:			
115-07-1	* Propylene	ND		ug/m³	0.15	0.15	0.871	EPA TO-15	03/20/2025 16:20	03/20/2025 17:11	YR
								Certifications:			
100-42-5	Styrene	ND		ug/m³	0.37	0.37	0.871	EPA TO-15	03/20/2025 16:20	03/20/2025 17:11	YR
								Certifications:	NELAC-NY12058,NJDEP-NY037		
127-18-4	Tetrachloroethylene	ND		ug/m³	0.59	0.59	0.871	EPA TO-15	03/20/2025 16:20	03/20/2025 17:11	YR
								Certifications:	NELAC-NY12058,NJDEP-NY037		
109-99-9	* Tetrahydrofuran	ND		ug/m³	0.51	0.51	0.871	EPA TO-15	03/20/2025 16:20	03/20/2025 17:11	YR
								Certifications:			
108-88-3	**Toluene**	**1.6**		ug/m³	0.33	0.33	0.871	EPA TO-15	03/20/2025 16:20	03/20/2025 17:11	YR
								Certifications:	NELAC-NY12058,NJDEP-NY037		
156-60-5	trans-1,2-Dichloroethylene	ND		ug/m³	0.35	0.35	0.871	EPA TO-15	03/20/2025 16:20	03/20/2025 17:11	YR
								Certifications:	NELAC-NY12058,NJDEP-NY037		
10061-02-6	trans-1,3-Dichloropropylene	ND		ug/m³	0.40	0.40	0.871	EPA TO-15	03/20/2025 16:20	03/20/2025 17:11	YR
								Certifications:	NELAC-NY12058,NJDEP-NY037		
79-01-6	Trichloroethylene	ND		ug/m³	0.12	0.12	0.871	EPA TO-15	03/20/2025 16:20	03/20/2025 17:11	YR
								Certifications:	NELAC-NY12058,NJDEP-NY037		
75-69-4	**Trichlorofluoromethane (Freon 11)**	**1.1**		ug/m³	0.49	0.49	0.871	EPA TO-15	03/20/2025 16:20	03/20/2025 17:11	YR
								Certifications:	NELAC-NY12058,NJDEP-NY037		

Sample Information

Client Sample ID: IA01_032025 **York Sample ID:** 25C1275-01

York Project (SDG) No.	Client Project ID	Matrix	Collection Date/Time	Date Received
25C1275	170361307	Indoor Ambient Air	March 20, 2025 7:40 am	03/20/2025

Volatile Organics, EPA TO15 Full List

Log-in Notes:

Sample Notes:

Sample Prepared by Method: EPA TO15 PREP

CAS No.	Parameter	Result	Flag	Units	Reported to LOD/MDL	LOQ	Dilution	Reference Method	Date/Time Prepared	Date/Time Analyzed	Analyst
108-05-4	Vinyl acetate	ND	TO-LCS-L, ICVE	ug/m³	0.31	0.31	0.871	EPA TO-15	03/20/2025 16:20	03/20/2025 17:11	YR
								Certifications:	NELAC-NY12058,NJDEP-NY037		
593-60-2	Vinyl bromide	ND		ug/m³	0.38	0.38	0.871	EPA TO-15	03/20/2025 16:20	03/20/2025 17:11	YR
								Certifications:	NELAC-NY12058,NJDEP-NY037		
75-01-4	Vinyl Chloride	ND		ug/m³	0.11	0.11	0.871	EPA TO-15	03/20/2025 16:20	03/20/2025 17:11	YR
								Certifications:	NELAC-NY12058,NJDEP-NY037		

Sample Information

Client Sample ID: IA02_032025 **York Sample ID:** 25C1275-02

York Project (SDG) No.	Client Project ID	Matrix	Collection Date/Time	Date Received
25C1275	170361307	Indoor Ambient Air	March 20, 2025 7:08 am	03/20/2025

Volatile Organics, EPA TO15 Full List

Log-in Notes:

Sample Notes:

Sample Prepared by Method: EPA TO15 PREP

CAS No.	Parameter	Result	Flag	Units	Reported to LOD/MDL	LOQ	Dilution	Reference Method	Date/Time Prepared	Date/Time Analyzed	Analyst
630-20-6	* 1,1,1,2-Tetrachloroethane	ND		ug/m³	0.60	0.60	0.868	EPA TO-15 Certifications:	03/20/2025 16:20	03/20/2025 17:57	YR
71-55-6	1,1,1-Trichloroethane	ND		ug/m³	0.47	0.47	0.868	EPA TO-15 Certifications: NELAC-NY12058,NJDEP-NY037	03/20/2025 16:20	03/20/2025 17:57	YR
79-34-5	1,1,2,2-Tetrachloroethane	ND		ug/m³	0.60	0.60	0.868	EPA TO-15 Certifications: NELAC-NY12058,NJDEP-NY037	03/20/2025 16:20	03/20/2025 17:57	YR
76-13-1	1,1,2-Trichloro-1,2,2-trifluoroethane (Freon 113)	ND		ug/m³	0.67	0.67	0.868	EPA TO-15 Certifications: NELAC-NY12058,NJDEP-NY037	03/20/2025 16:20	03/20/2025 17:57	YR
79-00-5	1,1,2-Trichloroethane	ND		ug/m³	0.47	0.47	0.868	EPA TO-15 Certifications: NELAC-NY12058,NJDEP-NY037	03/20/2025 16:20	03/20/2025 17:57	YR
75-34-3	1,1-Dichloroethane	ND		ug/m³	0.35	0.35	0.868	EPA TO-15 Certifications: NELAC-NY12058,NJDEP-NY037	03/20/2025 16:20	03/20/2025 17:57	YR
75-35-4	1,1-Dichloroethylene	ND		ug/m³	0.086	0.086	0.868	EPA TO-15 Certifications: NELAC-NY12058,NJDEP-NY037	03/20/2025 16:20	03/20/2025 17:57	YR
120-82-1	1,2,4-Trichlorobenzene	ND	TO-CCV	ug/m³	0.64	0.64	0.868	EPA TO-15 Certifications: NELAC-NY12058,NJDEP-NY037	03/20/2025 16:20	03/20/2025 17:57	YR
95-63-6	**1,2,4-Trimethylbenzene**	**2.4**		ug/m³	0.43	0.43	0.868	EPA TO-15 Certifications: NELAC-NY12058,NJDEP-NY037	03/20/2025 16:20	03/20/2025 17:57	YR
106-93-4	1,2-Dibromoethane	ND		ug/m³	0.67	0.67	0.868	EPA TO-15 Certifications: NELAC-NY12058,NJDEP-NY037	03/20/2025 16:20	03/20/2025 17:57	YR
95-50-1	1,2-Dichlorobenzene	ND		ug/m³	0.52	0.52	0.868	EPA TO-15 Certifications: NELAC-NY12058,NJDEP-NY037	03/20/2025 16:20	03/20/2025 17:57	YR
107-06-2	1,2-Dichloroethane	ND		ug/m³	0.35	0.35	0.868	EPA TO-15 Certifications: NELAC-NY12058,NJDEP-NY037	03/20/2025 16:20	03/20/2025 17:57	YR
78-87-5	1,2-Dichloropropane	ND		ug/m³	0.40	0.40	0.868	EPA TO-15 Certifications: NELAC-NY12058,NJDEP-NY037	03/20/2025 16:20	03/20/2025 17:57	YR
76-14-2	1,2-Dichlorotetrafluoroethane	ND		ug/m³	0.61	0.61	0.868	EPA TO-15 Certifications: NELAC-NY12058,NJDEP-NY037	03/20/2025 16:20	03/20/2025 17:57	YR
108-67-8	**1,3,5-Trimethylbenzene**	**0.68**		ug/m³	0.43	0.43	0.868	EPA TO-15 Certifications: NELAC-NY12058,NJDEP-NY037	03/20/2025 16:20	03/20/2025 17:57	YR
106-99-0	1,3-Butadiene	ND		ug/m³	0.58	0.58	0.868	EPA TO-15 Certifications: NELAC-NY12058,NJDEP-NY037	03/20/2025 16:20	03/20/2025 17:57	YR
541-73-1	1,3-Dichlorobenzene	ND		ug/m³	0.52	0.52	0.868	EPA TO-15 Certifications: NELAC-NY12058,NJDEP-NY037	03/20/2025 16:20	03/20/2025 17:57	YR
142-28-9	* 1,3-Dichloropropane	ND		ug/m³	0.40	0.40	0.868	EPA TO-15 Certifications:	03/20/2025 16:20	03/20/2025 17:57	YR
106-46-7	1,4-Dichlorobenzene	ND		ug/m³	0.52	0.52	0.868	EPA TO-15 Certifications: NELAC-NY12058,NJDEP-NY037	03/20/2025 16:20	03/20/2025 17:57	YR
123-91-1	1,4-Dioxane	ND		ug/m³	0.63	0.63	0.868	EPA TO-15 Certifications: NELAC-NY12058,NJDEP-NY037	03/20/2025 16:20	03/20/2025 17:57	YR
540-84-1	* **2,2,4-Trimethylpentane**	**0.32**		ug/m³	0.10	0.20	0.868	EPA TO-15 Certifications:	03/20/2025 16:20	03/20/2025 17:57	YR

Sample Information

Client Sample ID: IA02_032025 **York Sample ID:** 25C1275-02

York Project (SDG) No.	Client Project ID	Matrix	Collection Date/Time	Date Received
25C1275	170361307	Indoor Ambient Air	March 20, 2025 7:08 am	03/20/2025

Volatile Organics, EPA TO15 Full List

Log-in Notes:

Sample Notes:

Sample Prepared by Method: EPA TO15 PREP

CAS No.	Parameter	Result	Flag	Units	Reported to LOD/MDL	LOQ	Dilution	Reference Method	Date/Time Prepared	Date/Time Analyzed	Analyst
78-93-3	**2-Butanone**	**0.31**		ug/m³	0.26	0.26	0.868	EPA TO-15	03/20/2025 16:20	03/20/2025 17:57	YR
								Certifications: NELAC-NY12058,NJDEP-NY037			
591-78-6	* 2-Hexanone	ND		ug/m³	0.71	0.71	0.868	EPA TO-15	03/20/2025 16:20	03/20/2025 17:57	YR
								Certifications:			
107-05-1	3-Chloropropene	ND		ug/m³	1.4	1.4	0.868	EPA TO-15	03/20/2025 16:20	03/20/2025 17:57	YR
								Certifications: NELAC-NY12058,NJDEP-NY037			
108-10-1	4-Methyl-2-pentanone	ND		ug/m³	0.36	0.36	0.868	EPA TO-15	03/20/2025 16:20	03/20/2025 17:57	YR
								Certifications: NELAC-NY12058,NJDEP-NY037			
67-64-1	**Acetone**	**6.2**		ug/m³	0.41	1.6	0.868	EPA TO-15	03/20/2025 16:20	03/20/2025 17:57	YR
								Certifications: NELAC-NY12058,NJDEP-NY037			
107-13-1	Acrylonitrile	ND		ug/m³	0.19	2.4	0.868	EPA TO-15	03/20/2025 16:20	03/20/2025 17:57	YR
								Certifications: NELAC-NY12058,NJDEP-NY037			
71-43-2	**Benzene**	**0.47**		ug/m³	0.28	0.28	0.868	EPA TO-15	03/20/2025 16:20	03/20/2025 17:57	YR
								Certifications: NELAC-NY12058,NJDEP-NY037			
100-44-7	Benzyl chloride	ND	TO-CCV	ug/m³	0.45	0.45	0.868	EPA TO-15	03/20/2025 16:20	03/20/2025 17:57	YR
								Certifications: NELAC-NY12058,NJDEP-NY037			
75-27-4	Bromodichloromethane	ND		ug/m³	0.58	0.58	0.868	EPA TO-15	03/20/2025 16:20	03/20/2025 17:57	YR
								Certifications: NELAC-NY12058,NJDEP-NY037			
75-25-2	Bromoform	ND		ug/m³	0.90	0.90	0.868	EPA TO-15	03/20/2025 16:20	03/20/2025 17:57	YR
								Certifications: NELAC-NY12058,NJDEP-NY037			
74-83-9	Bromomethane	ND		ug/m³	0.34	0.34	0.868	EPA TO-15	03/20/2025 16:20	03/20/2025 17:57	YR
								Certifications: NELAC-NY12058,NJDEP-NY037			
75-15-0	Carbon disulfide	ND		ug/m³	0.27	0.27	0.868	EPA TO-15	03/20/2025 16:20	03/20/2025 17:57	YR
								Certifications: NELAC-NY12058,NJDEP-NY037			
56-23-5	**Carbon tetrachloride**	**0.38**		ug/m³	0.14	0.14	0.868	EPA TO-15	03/20/2025 16:20	03/20/2025 17:57	YR
								Certifications: NELAC-NY12058,NJDEP-NY037			
108-90-7	Chlorobenzene	ND		ug/m³	0.40	0.40	0.868	EPA TO-15	03/20/2025 16:20	03/20/2025 17:57	YR
								Certifications: NELAC-NY12058,NJDEP-NY037			
75-00-3	Chloroethane	ND		ug/m³	0.23	0.23	0.868	EPA TO-15	03/20/2025 16:20	03/20/2025 17:57	YR
								Certifications: NELAC-NY12058,NJDEP-NY037			
67-66-3	Chloroform	ND		ug/m³	0.42	0.42	0.868	EPA TO-15	03/20/2025 16:20	03/20/2025 17:57	YR
								Certifications: NELAC-NY12058,NJDEP-NY037			
74-87-3	**Chloromethane**	**1.2**		ug/m³	0.18	0.18	0.868	EPA TO-15	03/20/2025 16:20	03/20/2025 17:57	YR
								Certifications: NELAC-NY12058,NJDEP-NY037			
156-59-2	cis-1,2-Dichloroethylene	ND		ug/m³	0.086	0.086	0.868	EPA TO-15	03/20/2025 16:20	03/20/2025 17:57	YR
								Certifications: NELAC-NY12058,NJDEP-NY037			
10061-01-5	cis-1,3-Dichloropropylene	ND		ug/m³	0.39	0.39	0.868	EPA TO-15	03/20/2025 16:20	03/20/2025 17:57	YR
								Certifications: NELAC-NY12058,NJDEP-NY037			
110-82-7	Cyclohexane	ND		ug/m³	0.30	0.30	0.868	EPA TO-15	03/20/2025 16:20	03/20/2025 17:57	YR
								Certifications: NELAC-NY12058,NJDEP-NY037			
124-48-1	Dibromochloromethane	ND		ug/m³	0.74	0.74	0.868	EPA TO-15	03/20/2025 16:20	03/20/2025 17:57	YR
								Certifications: NELAC-NY12058,NJDEP-NY037			
75-71-8	**Dichlorodifluoromethane**	**2.0**		ug/m³	0.43	0.43	0.868	EPA TO-15	03/20/2025 16:20	03/20/2025 17:57	YR
								Certifications: NELAC-NY12058,NJDEP-NY037			

Sample Information

Client Sample ID: IA02_032025 **York Sample ID:** 25C1275-02

York Project (SDG) No.	Client Project ID	Matrix	Collection Date/Time	Date Received
25C1275	170361307	Indoor Ambient Air	March 20, 2025 7:08 am	03/20/2025

Volatile Organics, EPA TO15 Full List

Log-in Notes:

Sample Notes:

Sample Prepared by Method: EPA TO15 PREP

CAS No.	Parameter	Result	Flag	Units	Reported to LOD/MDL	LOQ	Dilution	Reference Method	Date/Time Prepared	Date/Time Analyzed	Analyst
141-78-6	* **Ethyl acetate**	**2.4**		ug/m³	0.63	0.63	0.868	EPA TO-15	03/20/2025 16:20	03/20/2025 17:57	YR
								Certifications:			
100-41-4	Ethyl Benzene	ND		ug/m³	0.38	0.38	0.868	EPA TO-15	03/20/2025 16:20	03/20/2025 17:57	YR
								Certifications:	NELAC-NY12058,NJDEP-NY037		
87-68-3	Hexachlorobutadiene	ND		ug/m³	0.93	0.93	0.868	EPA TO-15	03/20/2025 16:20	03/20/2025 17:57	YR
								Certifications:	NELAC-NY12058,NJDEP-NY037		
67-63-0	**Isopropanol**	**2.0**		ug/m³	0.43	1.3	0.868	EPA TO-15	03/20/2025 16:20	03/20/2025 17:57	YR
								Certifications:	NELAC-NY12058,NJDEP-NY037		
80-62-6	Methyl Methacrylate	ND		ug/m³	0.36	0.36	0.868	EPA TO-15	03/20/2025 16:20	03/20/2025 17:57	YR
								Certifications:	NELAC-NY12058,NJDEP-NY037		
1634-04-4	Methyl tert-butyl ether (MTBE)	ND		ug/m³	0.31	0.31	0.868	EPA TO-15	03/20/2025 16:20	03/20/2025 17:57	YR
								Certifications:	NELAC-NY12058,NJDEP-NY037		
75-09-2	Methylene chloride	ND		ug/m³	0.60	1.8	0.868	EPA TO-15	03/20/2025 16:20	03/20/2025 17:57	YR
								Certifications:	NELAC-NY12058,NJDEP-NY037		
91-20-3	* Naphthalene	ND		ug/m³	0.91	0.91	0.868	EPA TO-15	03/20/2025 16:20	03/20/2025 17:57	YR
								Certifications:	NJDEP-NY037		
142-82-5	n-Heptane	ND		ug/m³	0.36	0.36	0.868	EPA TO-15	03/20/2025 16:20	03/20/2025 17:57	YR
								Certifications:	NELAC-NY12058,NJDEP-NY037		
110-54-3	**n-Hexane**	**0.55**		ug/m³	0.31	0.31	0.868	EPA TO-15	03/20/2025 16:20	03/20/2025 17:57	YR
								Certifications:	NELAC-NY12058,NJDEP-NY037		
95-47-6	**o-Xylene**	**0.60**		ug/m³	0.38	0.38	0.868	EPA TO-15	03/20/2025 16:20	03/20/2025 17:57	YR
								Certifications:	NELAC-NY12058,NJDEP-NY037		
179601-23-1	**p- & m- Xylenes**	**1.4**	ICVE	ug/m³	0.75	0.75	0.868	EPA TO-15	03/20/2025 16:20	03/20/2025 17:57	YR
								Certifications:	NELAC-NY12058,NJDEP-NY037		
622-96-8	* **p-Ethyltoluene**	**1.3**		ug/m³	0.43	0.43	0.868	EPA TO-15	03/20/2025 16:20	03/20/2025 17:57	YR
								Certifications:			
115-07-1	* Propylene	ND		ug/m³	0.15	0.15	0.868	EPA TO-15	03/20/2025 16:20	03/20/2025 17:57	YR
								Certifications:			
100-42-5	Styrene	ND		ug/m³	0.37	0.37	0.868	EPA TO-15	03/20/2025 16:20	03/20/2025 17:57	YR
								Certifications:	NELAC-NY12058,NJDEP-NY037		
127-18-4	Tetrachloroethylene	ND		ug/m³	0.59	0.59	0.868	EPA TO-15	03/20/2025 16:20	03/20/2025 17:57	YR
								Certifications:	NELAC-NY12058,NJDEP-NY037		
109-99-9	* Tetrahydrofuran	ND		ug/m³	0.51	0.51	0.868	EPA TO-15	03/20/2025 16:20	03/20/2025 17:57	YR
								Certifications:			
108-88-3	**Toluene**	**1.3**		ug/m³	0.33	0.33	0.868	EPA TO-15	03/20/2025 16:20	03/20/2025 17:57	YR
								Certifications:	NELAC-NY12058,NJDEP-NY037		
156-60-5	trans-1,2-Dichloroethylene	ND		ug/m³	0.34	0.34	0.868	EPA TO-15	03/20/2025 16:20	03/20/2025 17:57	YR
								Certifications:	NELAC-NY12058,NJDEP-NY037		
10061-02-6	trans-1,3-Dichloropropylene	ND		ug/m³	0.39	0.39	0.868	EPA TO-15	03/20/2025 16:20	03/20/2025 17:57	YR
								Certifications:	NELAC-NY12058,NJDEP-NY037		
79-01-6	Trichloroethylene	ND		ug/m³	0.12	0.12	0.868	EPA TO-15	03/20/2025 16:20	03/20/2025 17:57	YR
								Certifications:	NELAC-NY12058,NJDEP-NY037		
75-69-4	**Trichlorofluoromethane (Freon 11)**	**1.0**		ug/m³	0.49	0.49	0.868	EPA TO-15	03/20/2025 16:20	03/20/2025 17:57	YR
								Certifications:	NELAC-NY12058,NJDEP-NY037		

Sample Information

Client Sample ID: IA02_032025 **York Sample ID:** 25C1275-02

York Project (SDG) No.	Client Project ID	Matrix	Collection Date/Time	Date Received
25C1275	170361307	Indoor Ambient Air	March 20, 2025 7:08 am	03/20/2025

Volatile Organics, EPA TO15 Full List

Log-in Notes:

Sample Notes:

Sample Prepared by Method: EPA TO15 PREP

CAS No.	Parameter	Result	Flag	Units	Reported to LOD/MDL	LOQ	Dilution	Reference Method	Date/Time Prepared	Date/Time Analyzed	Analyst
108-05-4	Vinyl acetate	ND	ICVE, TO-LCS -L	ug/m³	0.31	0.31	0.868	EPA TO-15	03/20/2025 16:20	03/20/2025 17:57	YR
								Certifications:	NELAC-NY12058,NJDEP-NY037		
593-60-2	Vinyl bromide	ND		ug/m³	0.38	0.38	0.868	EPA TO-15	03/20/2025 16:20	03/20/2025 17:57	YR
								Certifications:	NELAC-NY12058,NJDEP-NY037		
75-01-4	Vinyl Chloride	ND		ug/m³	0.11	0.11	0.868	EPA TO-15	03/20/2025 16:20	03/20/2025 17:57	YR
								Certifications:	NELAC-NY12058,NJDEP-NY037		

Sample Information

Client Sample ID: IA03_032025 **York Sample ID:** 25C1275-03

York Project (SDG) No.	Client Project ID	Matrix	Collection Date/Time	Date Received
25C1275	170361307	Indoor Ambient Air	March 20, 2025 7:05 am	03/20/2025

Volatile Organics, EPA TO15 Full List

Log-in Notes:

Sample Notes:

Sample Prepared by Method: EPA TO15 PREP

CAS No.	Parameter	Result	Flag	Units	Reported to LOD/MDL	LOQ	Dilution	Reference Method	Date/Time Prepared	Date/Time Analyzed	Analyst
630-20-6	* 1,1,1,2-Tetrachloroethane	ND		ug/m³	0.62	0.62	0.901	EPA TO-15 Certifications:	03/20/2025 16:20	03/20/2025 18:43	YR
71-55-6	1,1,1-Trichloroethane	ND		ug/m³	0.49	0.49	0.901	EPA TO-15 Certifications: NELAC-NY12058,NJDEP-NY037	03/20/2025 16:20	03/20/2025 18:43	YR
79-34-5	1,1,2,2-Tetrachloroethane	ND		ug/m³	0.62	0.62	0.901	EPA TO-15 Certifications: NELAC-NY12058,NJDEP-NY037	03/20/2025 16:20	03/20/2025 18:43	YR
76-13-1	1,1,2-Trichloro-1,2,2-trifluoroethane (Freon 113)	ND		ug/m³	0.69	0.69	0.901	EPA TO-15 Certifications: NELAC-NY12058,NJDEP-NY037	03/20/2025 16:20	03/20/2025 18:43	YR
79-00-5	1,1,2-Trichloroethane	ND		ug/m³	0.49	0.49	0.901	EPA TO-15 Certifications: NELAC-NY12058,NJDEP-NY037	03/20/2025 16:20	03/20/2025 18:43	YR
75-34-3	1,1-Dichloroethane	ND		ug/m³	0.36	0.36	0.901	EPA TO-15 Certifications: NELAC-NY12058,NJDEP-NY037	03/20/2025 16:20	03/20/2025 18:43	YR
75-35-4	1,1-Dichloroethylene	ND		ug/m³	0.089	0.089	0.901	EPA TO-15 Certifications: NELAC-NY12058,NJDEP-NY037	03/20/2025 16:20	03/20/2025 18:43	YR
120-82-1	1,2,4-Trichlorobenzene	ND	TO-CCV	ug/m³	0.67	0.67	0.901	EPA TO-15 Certifications: NELAC-NY12058,NJDEP-NY037	03/20/2025 16:20	03/20/2025 18:43	YR
95-63-6	**1,2,4-Trimethylbenzene**	**4.3**		ug/m³	0.44	0.44	0.901	EPA TO-15 Certifications: NELAC-NY12058,NJDEP-NY037	03/20/2025 16:20	03/20/2025 18:43	YR
106-93-4	1,2-Dibromoethane	ND		ug/m³	0.69	0.69	0.901	EPA TO-15 Certifications: NELAC-NY12058,NJDEP-NY037	03/20/2025 16:20	03/20/2025 18:43	YR
95-50-1	1,2-Dichlorobenzene	ND		ug/m³	0.54	0.54	0.901	EPA TO-15 Certifications: NELAC-NY12058,NJDEP-NY037	03/20/2025 16:20	03/20/2025 18:43	YR
107-06-2	1,2-Dichloroethane	ND		ug/m³	0.36	0.36	0.901	EPA TO-15 Certifications: NELAC-NY12058,NJDEP-NY037	03/20/2025 16:20	03/20/2025 18:43	YR
78-87-5	1,2-Dichloropropane	ND		ug/m³	0.42	0.42	0.901	EPA TO-15 Certifications: NELAC-NY12058,NJDEP-NY037	03/20/2025 16:20	03/20/2025 18:43	YR
76-14-2	1,2-Dichlorotetrafluoroethane	ND		ug/m³	0.63	0.63	0.901	EPA TO-15 Certifications: NELAC-NY12058,NJDEP-NY037	03/20/2025 16:20	03/20/2025 18:43	YR
108-67-8	**1,3,5-Trimethylbenzene**	**1.2**		ug/m³	0.44	0.44	0.901	EPA TO-15 Certifications: NELAC-NY12058,NJDEP-NY037	03/20/2025 16:20	03/20/2025 18:43	YR
106-99-0	1,3-Butadiene	ND		ug/m³	0.60	0.60	0.901	EPA TO-15 Certifications: NELAC-NY12058,NJDEP-NY037	03/20/2025 16:20	03/20/2025 18:43	YR
541-73-1	1,3-Dichlorobenzene	ND		ug/m³	0.54	0.54	0.901	EPA TO-15 Certifications: NELAC-NY12058,NJDEP-NY037	03/20/2025 16:20	03/20/2025 18:43	YR
142-28-9	* 1,3-Dichloropropane	ND		ug/m³	0.42	0.42	0.901	EPA TO-15 Certifications:	03/20/2025 16:20	03/20/2025 18:43	YR
106-46-7	1,4-Dichlorobenzene	ND		ug/m³	0.54	0.54	0.901	EPA TO-15 Certifications: NELAC-NY12058,NJDEP-NY037	03/20/2025 16:20	03/20/2025 18:43	YR
123-91-1	1,4-Dioxane	ND		ug/m³	0.65	0.65	0.901	EPA TO-15 Certifications: NELAC-NY12058,NJDEP-NY037	03/20/2025 16:20	03/20/2025 18:43	YR
540-84-1	* **2,2,4-Trimethylpentane**	**0.76**		ug/m³	0.11	0.21	0.901	EPA TO-15 Certifications:	03/20/2025 16:20	03/20/2025 18:43	YR

Sample Information

Client Sample ID: IA03_032025 **York Sample ID:** 25C1275-03

York Project (SDG) No.	Client Project ID	Matrix	Collection Date/Time	Date Received
25C1275	170361307	Indoor Ambient Air	March 20, 2025 7:05 am	03/20/2025

Volatile Organics, EPA TO15 Full List

Log-in Notes:

Sample Notes:

Sample Prepared by Method: EPA TO15 PREP

CAS No.	Parameter	Result	Flag	Units	Reported to LOD/MDL	LOQ	Dilution	Reference Method	Date/Time Prepared	Date/Time Analyzed	Analyst
78-93-3	**2-Butanone**	**0.58**		ug/m³	0.27	0.27	0.901	EPA TO-15	03/20/2025 16:20	03/20/2025 18:43	YR
								Certifications:	NELAC-NY12058,NJDEP-NY037		
591-78-6	* 2-Hexanone	ND		ug/m³	0.74	0.74	0.901	EPA TO-15	03/20/2025 16:20	03/20/2025 18:43	YR
								Certifications:			
107-05-1	3-Chloropropene	ND		ug/m³	1.4	1.4	0.901	EPA TO-15	03/20/2025 16:20	03/20/2025 18:43	YR
								Certifications:	NELAC-NY12058,NJDEP-NY037		
108-10-1	**4-Methyl-2-pentanone**	**0.44**		ug/m³	0.37	0.37	0.901	EPA TO-15	03/20/2025 16:20	03/20/2025 18:43	YR
								Certifications:	NELAC-NY12058,NJDEP-NY037		
67-64-1	**Acetone**	**16**		ug/m³	0.43	1.7	0.901	EPA TO-15	03/20/2025 16:20	03/20/2025 18:43	YR
								Certifications:	NELAC-NY12058,NJDEP-NY037		
107-13-1	Acrylonitrile	ND		ug/m³	0.20	2.5	0.901	EPA TO-15	03/20/2025 16:20	03/20/2025 18:43	YR
								Certifications:	NELAC-NY12058,NJDEP-NY037		
71-43-2	**Benzene**	**0.72**		ug/m³	0.29	0.29	0.901	EPA TO-15	03/20/2025 16:20	03/20/2025 18:43	YR
								Certifications:	NELAC-NY12058,NJDEP-NY037		
100-44-7	Benzyl chloride	ND	TO-CCV	ug/m³	0.47	0.47	0.901	EPA TO-15	03/20/2025 16:20	03/20/2025 18:43	YR
								Certifications:	NELAC-NY12058,NJDEP-NY037		
75-27-4	Bromodichloromethane	ND		ug/m³	0.60	0.60	0.901	EPA TO-15	03/20/2025 16:20	03/20/2025 18:43	YR
								Certifications:	NELAC-NY12058,NJDEP-NY037		
75-25-2	Bromoform	ND		ug/m³	0.93	0.93	0.901	EPA TO-15	03/20/2025 16:20	03/20/2025 18:43	YR
								Certifications:	NELAC-NY12058,NJDEP-NY037		
74-83-9	Bromomethane	ND		ug/m³	0.35	0.35	0.901	EPA TO-15	03/20/2025 16:20	03/20/2025 18:43	YR
								Certifications:	NELAC-NY12058,NJDEP-NY037		
75-15-0	Carbon disulfide	ND		ug/m³	0.28	0.28	0.901	EPA TO-15	03/20/2025 16:20	03/20/2025 18:43	YR
								Certifications:	NELAC-NY12058,NJDEP-NY037		
56-23-5	**Carbon tetrachloride**	**0.40**		ug/m³	0.14	0.14	0.901	EPA TO-15	03/20/2025 16:20	03/20/2025 18:43	YR
								Certifications:	NELAC-NY12058,NJDEP-NY037		
108-90-7	Chlorobenzene	ND		ug/m³	0.41	0.41	0.901	EPA TO-15	03/20/2025 16:20	03/20/2025 18:43	YR
								Certifications:	NELAC-NY12058,NJDEP-NY037		
75-00-3	Chloroethane	ND		ug/m³	0.24	0.24	0.901	EPA TO-15	03/20/2025 16:20	03/20/2025 18:43	YR
								Certifications:	NELAC-NY12058,NJDEP-NY037		
67-66-3	Chloroform	ND		ug/m³	0.44	0.44	0.901	EPA TO-15	03/20/2025 16:20	03/20/2025 18:43	YR
								Certifications:	NELAC-NY12058,NJDEP-NY037		
74-87-3	**Chloromethane**	**1.2**		ug/m³	0.19	0.19	0.901	EPA TO-15	03/20/2025 16:20	03/20/2025 18:43	YR
								Certifications:	NELAC-NY12058,NJDEP-NY037		
156-59-2	cis-1,2-Dichloroethylene	ND		ug/m³	0.089	0.089	0.901	EPA TO-15	03/20/2025 16:20	03/20/2025 18:43	YR
								Certifications:	NELAC-NY12058,NJDEP-NY037		
10061-01-5	cis-1,3-Dichloropropylene	ND		ug/m³	0.41	0.41	0.901	EPA TO-15	03/20/2025 16:20	03/20/2025 18:43	YR
								Certifications:	NELAC-NY12058,NJDEP-NY037		
110-82-7	**Cyclohexane**	**0.43**		ug/m³	0.31	0.31	0.901	EPA TO-15	03/20/2025 16:20	03/20/2025 18:43	YR
								Certifications:	NELAC-NY12058,NJDEP-NY037		
124-48-1	Dibromochloromethane	ND		ug/m³	0.77	0.77	0.901	EPA TO-15	03/20/2025 16:20	03/20/2025 18:43	YR
								Certifications:	NELAC-NY12058,NJDEP-NY037		
75-71-8	**Dichlorodifluoromethane**	**2.0**		ug/m³	0.45	0.45	0.901	EPA TO-15	03/20/2025 16:20	03/20/2025 18:43	YR
								Certifications:	NELAC-NY12058,NJDEP-NY037		

Sample Information

Client Sample ID: IA03_032025 **York Sample ID:** 25C1275-03

York Project (SDG) No.	Client Project ID	Matrix	Collection Date/Time	Date Received
25C1275	170361307	Indoor Ambient Air	March 20, 2025 7:05 am	03/20/2025

Volatile Organics, EPA TO15 Full List

Log-in Notes:

Sample Notes:

Sample Prepared by Method: EPA TO15 PREP

CAS No.	Parameter	Result	Flag	Units	Reported to LOD/MDL	LOQ	Dilution	Reference Method	Date/Time Prepared	Date/Time Analyzed	Analyst
141-78-6	*** Ethyl acetate**	**11**		ug/m³	0.65	0.65	0.901	EPA TO-15	03/20/2025 16:20	03/20/2025 18:43	YR
								Certifications:			
100-41-4	**Ethyl Benzene**	**0.90**		ug/m³	0.39	0.39	0.901	EPA TO-15	03/20/2025 16:20	03/20/2025 18:43	YR
								Certifications:	NELAC-NY12058,NJDEP-NY037		
87-68-3	Hexachlorobutadiene	ND		ug/m³	0.96	0.96	0.901	EPA TO-15	03/20/2025 16:20	03/20/2025 18:43	YR
								Certifications:	NELAC-NY12058,NJDEP-NY037		
67-63-0	**Isopropanol**	**2.5**		ug/m³	0.44	1.3	0.901	EPA TO-15	03/20/2025 16:20	03/20/2025 18:43	YR
								Certifications:	NELAC-NY12058,NJDEP-NY037		
80-62-6	Methyl Methacrylate	ND		ug/m³	0.37	0.37	0.901	EPA TO-15	03/20/2025 16:20	03/20/2025 18:43	YR
								Certifications:	NELAC-NY12058,NJDEP-NY037		
1634-04-4	Methyl tert-butyl ether (MTBE)	ND		ug/m³	0.32	0.32	0.901	EPA TO-15	03/20/2025 16:20	03/20/2025 18:43	YR
								Certifications:	NELAC-NY12058,NJDEP-NY037		
75-09-2	Methylene chloride	ND		ug/m³	0.63	1.9	0.901	EPA TO-15	03/20/2025 16:20	03/20/2025 18:43	YR
								Certifications:	NELAC-NY12058,NJDEP-NY037		
91-20-3	* Naphthalene	ND		ug/m³	0.94	0.94	0.901	EPA TO-15	03/20/2025 16:20	03/20/2025 18:43	YR
								Certifications:	NJDEP-NY037		
142-82-5	**n-Heptane**	**0.78**		ug/m³	0.37	0.37	0.901	EPA TO-15	03/20/2025 16:20	03/20/2025 18:43	YR
								Certifications:	NELAC-NY12058,NJDEP-NY037		
110-54-3	**n-Hexane**	**1.4**		ug/m³	0.32	0.32	0.901	EPA TO-15	03/20/2025 16:20	03/20/2025 18:43	YR
								Certifications:	NELAC-NY12058,NJDEP-NY037		
95-47-6	**o-Xylene**	**1.7**		ug/m³	0.39	0.39	0.901	EPA TO-15	03/20/2025 16:20	03/20/2025 18:43	YR
								Certifications:	NELAC-NY12058,NJDEP-NY037		
179601-23-1	**p- & m- Xylenes**	**3.9**	ICVE	ug/m³	0.78	0.78	0.901	EPA TO-15	03/20/2025 16:20	03/20/2025 18:43	YR
								Certifications:	NELAC-NY12058,NJDEP-NY037		
622-96-8	*** p-Ethyltoluene**	**2.7**		ug/m³	0.44	0.44	0.901	EPA TO-15	03/20/2025 16:20	03/20/2025 18:43	YR
								Certifications:			
115-07-1	* Propylene	ND		ug/m³	0.16	0.16	0.901	EPA TO-15	03/20/2025 16:20	03/20/2025 18:43	YR
								Certifications:			
100-42-5	Styrene	ND		ug/m³	0.38	0.38	0.901	EPA TO-15	03/20/2025 16:20	03/20/2025 18:43	YR
								Certifications:	NELAC-NY12058,NJDEP-NY037		
127-18-4	Tetrachloroethylene	ND		ug/m³	0.61	0.61	0.901	EPA TO-15	03/20/2025 16:20	03/20/2025 18:43	YR
								Certifications:	NELAC-NY12058,NJDEP-NY037		
109-99-9	* Tetrahydrofuran	ND		ug/m³	0.53	0.53	0.901	EPA TO-15	03/20/2025 16:20	03/20/2025 18:43	YR
								Certifications:			
108-88-3	**Toluene**	**3.2**		ug/m³	0.34	0.34	0.901	EPA TO-15	03/20/2025 16:20	03/20/2025 18:43	YR
								Certifications:	NELAC-NY12058,NJDEP-NY037		
156-60-5	trans-1,2-Dichloroethylene	ND		ug/m³	0.36	0.36	0.901	EPA TO-15	03/20/2025 16:20	03/20/2025 18:43	YR
								Certifications:	NELAC-NY12058,NJDEP-NY037		
10061-02-6	trans-1,3-Dichloropropylene	ND		ug/m³	0.41	0.41	0.901	EPA TO-15	03/20/2025 16:20	03/20/2025 18:43	YR
								Certifications:	NELAC-NY12058,NJDEP-NY037		
79-01-6	Trichloroethylene	ND		ug/m³	0.12	0.12	0.901	EPA TO-15	03/20/2025 16:20	03/20/2025 18:43	YR
								Certifications:	NELAC-NY12058,NJDEP-NY037		
75-69-4	**Trichlorofluoromethane (Freon 11)**	**1.0**		ug/m³	0.51	0.51	0.901	EPA TO-15	03/20/2025 16:20	03/20/2025 18:43	YR
								Certifications:	NELAC-NY12058,NJDEP-NY037		

Sample Information

Client Sample ID: IA03_032025 **York Sample ID:** 25C1275-03

York Project (SDG) No.	Client Project ID	Matrix	Collection Date/Time	Date Received
25C1275	170361307	Indoor Ambient Air	March 20, 2025 7:05 am	03/20/2025

Volatile Organics, EPA TO15 Full List

Log-in Notes:

Sample Notes:

Sample Prepared by Method: EPA TO15 PREP

CAS No.	Parameter	Result	Flag	Units	Reported to LOD/MDL	LOQ	Dilution	Reference Method	Date/Time Prepared	Date/Time Analyzed	Analyst
108-05-4	Vinyl acetate	ND	ICVE, TO-LCS -L	ug/m³	0.32	0.32	0.901	EPA TO-15	03/20/2025 16:20	03/20/2025 18:43	YR
								Certifications:	NELAC-NY12058,NJDEP-NY037		
593-60-2	Vinyl bromide	ND		ug/m³	0.39	0.39	0.901	EPA TO-15	03/20/2025 16:20	03/20/2025 18:43	YR
								Certifications:	NELAC-NY12058,NJDEP-NY037		
75-01-4	Vinyl Chloride	ND		ug/m³	0.12	0.12	0.901	EPA TO-15	03/20/2025 16:20	03/20/2025 18:43	YR
								Certifications:	NELAC-NY12058,NJDEP-NY037		

Sample Information

Client Sample ID: IA04_032025 **York Sample ID:** 25C1275-04

York Project (SDG) No.	Client Project ID	Matrix	Collection Date/Time	Date Received
25C1275	170361307	Indoor Ambient Air	March 20, 2025 7:15 am	03/20/2025

Volatile Organics, EPA TO15 Full List

Log-in Notes:

Sample Notes:

Sample Prepared by Method: EPA TO15 PREP

CAS No.	Parameter	Result	Flag	Units	Reported to LOD/MDL	LOQ	Dilution	Reference Method	Date/Time Prepared	Date/Time Analyzed	Analyst
630-20-6	* 1,1,1,2-Tetrachloroethane	ND		ug/m³	0.62	0.62	0.898	EPA TO-15 Certifications:	03/20/2025 16:20	03/20/2025 19:29	YR
71-55-6	1,1,1-Trichloroethane	ND		ug/m³	0.49	0.49	0.898	EPA TO-15 Certifications: NELAC-NY12058,NJDEP-NY037	03/20/2025 16:20	03/20/2025 19:29	YR
79-34-5	1,1,2,2-Tetrachloroethane	ND		ug/m³	0.62	0.62	0.898	EPA TO-15 Certifications: NELAC-NY12058,NJDEP-NY037	03/20/2025 16:20	03/20/2025 19:29	YR
76-13-1	1,1,2-Trichloro-1,2,2-trifluoroethane (Freon 113)	ND		ug/m³	0.69	0.69	0.898	EPA TO-15 Certifications: NELAC-NY12058,NJDEP-NY037	03/20/2025 16:20	03/20/2025 19:29	YR
79-00-5	1,1,2-Trichloroethane	ND		ug/m³	0.49	0.49	0.898	EPA TO-15 Certifications: NELAC-NY12058,NJDEP-NY037	03/20/2025 16:20	03/20/2025 19:29	YR
75-34-3	1,1-Dichloroethane	ND		ug/m³	0.36	0.36	0.898	EPA TO-15 Certifications: NELAC-NY12058,NJDEP-NY037	03/20/2025 16:20	03/20/2025 19:29	YR
75-35-4	1,1-Dichloroethylene	ND		ug/m³	0.089	0.089	0.898	EPA TO-15 Certifications: NELAC-NY12058,NJDEP-NY037	03/20/2025 16:20	03/20/2025 19:29	YR
120-82-1	1,2,4-Trichlorobenzene	ND	TO-CCV	ug/m³	0.67	0.67	0.898	EPA TO-15 Certifications: NELAC-NY12058,NJDEP-NY037	03/20/2025 16:20	03/20/2025 19:29	YR
95-63-6	**1,2,4-Trimethylbenzene**	**3.0**		ug/m³	0.44	0.44	0.898	EPA TO-15 Certifications: NELAC-NY12058,NJDEP-NY037	03/20/2025 16:20	03/20/2025 19:29	YR
106-93-4	1,2-Dibromoethane	ND		ug/m³	0.69	0.69	0.898	EPA TO-15 Certifications: NELAC-NY12058,NJDEP-NY037	03/20/2025 16:20	03/20/2025 19:29	YR
95-50-1	1,2-Dichlorobenzene	ND		ug/m³	0.54	0.54	0.898	EPA TO-15 Certifications: NELAC-NY12058,NJDEP-NY037	03/20/2025 16:20	03/20/2025 19:29	YR
107-06-2	1,2-Dichloroethane	ND		ug/m³	0.36	0.36	0.898	EPA TO-15 Certifications: NELAC-NY12058,NJDEP-NY037	03/20/2025 16:20	03/20/2025 19:29	YR
78-87-5	1,2-Dichloropropane	ND		ug/m³	0.41	0.41	0.898	EPA TO-15 Certifications: NELAC-NY12058,NJDEP-NY037	03/20/2025 16:20	03/20/2025 19:29	YR
76-14-2	1,2-Dichlorotetrafluoroethane	ND		ug/m³	0.63	0.63	0.898	EPA TO-15 Certifications: NELAC-NY12058,NJDEP-NY037	03/20/2025 16:20	03/20/2025 19:29	YR
108-67-8	**1,3,5-Trimethylbenzene**	**0.84**		ug/m³	0.44	0.44	0.898	EPA TO-15 Certifications: NELAC-NY12058,NJDEP-NY037	03/20/2025 16:20	03/20/2025 19:29	YR
106-99-0	1,3-Butadiene	ND		ug/m³	0.60	0.60	0.898	EPA TO-15 Certifications: NELAC-NY12058,NJDEP-NY037	03/20/2025 16:20	03/20/2025 19:29	YR
541-73-1	1,3-Dichlorobenzene	ND		ug/m³	0.54	0.54	0.898	EPA TO-15 Certifications: NELAC-NY12058,NJDEP-NY037	03/20/2025 16:20	03/20/2025 19:29	YR
142-28-9	* 1,3-Dichloropropane	ND		ug/m³	0.41	0.41	0.898	EPA TO-15 Certifications:	03/20/2025 16:20	03/20/2025 19:29	YR
106-46-7	1,4-Dichlorobenzene	ND		ug/m³	0.54	0.54	0.898	EPA TO-15 Certifications: NELAC-NY12058,NJDEP-NY037	03/20/2025 16:20	03/20/2025 19:29	YR
123-91-1	1,4-Dioxane	ND		ug/m³	0.65	0.65	0.898	EPA TO-15 Certifications: NELAC-NY12058,NJDEP-NY037	03/20/2025 16:20	03/20/2025 19:29	YR
540-84-1	* **2,2,4-Trimethylpentane**	**0.63**		ug/m³	0.10	0.21	0.898	EPA TO-15 Certifications:	03/20/2025 16:20	03/20/2025 19:29	YR

Sample Information

Client Sample ID: IA04_032025 **York Sample ID:** 25C1275-04

York Project (SDG) No.	Client Project ID	Matrix	Collection Date/Time	Date Received
25C1275	170361307	Indoor Ambient Air	March 20, 2025 7:15 am	03/20/2025

Volatile Organics, EPA TO15 Full List

Log-in Notes:

Sample Notes:

Sample Prepared by Method: EPA TO15 PREP

CAS No.	Parameter	Result	Flag	Units	Reported to LOD/MDL	LOQ	Dilution	Reference Method	Date/Time Prepared	Date/Time Analyzed	Analyst
78-93-3	**2-Butanone**	**0.32**		ug/m³	0.26	0.26	0.898	EPA TO-15	03/20/2025 16:20	03/20/2025 19:29	YR
								Certifications:	NELAC-NY12058,NJDEP-NY037		
591-78-6	*** 2-Hexanone**	**0.96**		ug/m³	0.74	0.74	0.898	EPA TO-15	03/20/2025 16:20	03/20/2025 19:29	YR
								Certifications:			
107-05-1	3-Chloropropene	ND		ug/m³	1.4	1.4	0.898	EPA TO-15	03/20/2025 16:20	03/20/2025 19:29	YR
								Certifications:	NELAC-NY12058,NJDEP-NY037		
108-10-1	4-Methyl-2-pentanone	ND		ug/m³	0.37	0.37	0.898	EPA TO-15	03/20/2025 16:20	03/20/2025 19:29	YR
								Certifications:	NELAC-NY12058,NJDEP-NY037		
67-64-1	**Acetone**	**5.8**		ug/m³	0.43	1.7	0.898	EPA TO-15	03/20/2025 16:20	03/20/2025 19:29	YR
								Certifications:	NELAC-NY12058,NJDEP-NY037		
107-13-1	**Acrylonitrile**	**1.1**	J	ug/m³	0.19	2.5	0.898	EPA TO-15	03/20/2025 16:20	03/20/2025 19:29	YR
								Certifications:	NELAC-NY12058,NJDEP-NY037		
71-43-2	**Benzene**	**0.55**		ug/m³	0.29	0.29	0.898	EPA TO-15	03/20/2025 16:20	03/20/2025 19:29	YR
								Certifications:	NELAC-NY12058,NJDEP-NY037		
100-44-7	Benzyl chloride	ND	TO-CCV	ug/m³	0.46	0.46	0.898	EPA TO-15	03/20/2025 16:20	03/20/2025 19:29	YR
								Certifications:	NELAC-NY12058,NJDEP-NY037		
75-27-4	Bromodichloromethane	ND		ug/m³	0.60	0.60	0.898	EPA TO-15	03/20/2025 16:20	03/20/2025 19:29	YR
								Certifications:	NELAC-NY12058,NJDEP-NY037		
75-25-2	Bromoform	ND		ug/m³	0.93	0.93	0.898	EPA TO-15	03/20/2025 16:20	03/20/2025 19:29	YR
								Certifications:	NELAC-NY12058,NJDEP-NY037		
74-83-9	Bromomethane	ND		ug/m³	0.35	0.35	0.898	EPA TO-15	03/20/2025 16:20	03/20/2025 19:29	YR
								Certifications:	NELAC-NY12058,NJDEP-NY037		
75-15-0	Carbon disulfide	ND		ug/m³	0.28	0.28	0.898	EPA TO-15	03/20/2025 16:20	03/20/2025 19:29	YR
								Certifications:	NELAC-NY12058,NJDEP-NY037		
56-23-5	**Carbon tetrachloride**	**0.45**		ug/m³	0.14	0.14	0.898	EPA TO-15	03/20/2025 16:20	03/20/2025 19:29	YR
								Certifications:	NELAC-NY12058,NJDEP-NY037		
108-90-7	Chlorobenzene	ND		ug/m³	0.41	0.41	0.898	EPA TO-15	03/20/2025 16:20	03/20/2025 19:29	YR
								Certifications:	NELAC-NY12058,NJDEP-NY037		
75-00-3	Chloroethane	ND		ug/m³	0.24	0.24	0.898	EPA TO-15	03/20/2025 16:20	03/20/2025 19:29	YR
								Certifications:	NELAC-NY12058,NJDEP-NY037		
67-66-3	Chloroform	ND		ug/m³	0.44	0.44	0.898	EPA TO-15	03/20/2025 16:20	03/20/2025 19:29	YR
								Certifications:	NELAC-NY12058,NJDEP-NY037		
74-87-3	**Chloromethane**	**1.3**		ug/m³	0.19	0.19	0.898	EPA TO-15	03/20/2025 16:20	03/20/2025 19:29	YR
								Certifications:	NELAC-NY12058,NJDEP-NY037		
156-59-2	cis-1,2-Dichloroethylene	ND		ug/m³	0.089	0.089	0.898	EPA TO-15	03/20/2025 16:20	03/20/2025 19:29	YR
								Certifications:	NELAC-NY12058,NJDEP-NY037		
10061-01-5	cis-1,3-Dichloropropylene	ND		ug/m³	0.41	0.41	0.898	EPA TO-15	03/20/2025 16:20	03/20/2025 19:29	YR
								Certifications:	NELAC-NY12058,NJDEP-NY037		
110-82-7	Cyclohexane	ND		ug/m³	0.31	0.31	0.898	EPA TO-15	03/20/2025 16:20	03/20/2025 19:29	YR
								Certifications:	NELAC-NY12058,NJDEP-NY037		
124-48-1	Dibromochloromethane	ND		ug/m³	0.76	0.76	0.898	EPA TO-15	03/20/2025 16:20	03/20/2025 19:29	YR
								Certifications:	NELAC-NY12058,NJDEP-NY037		
75-71-8	**Dichlorodifluoromethane**	**2.1**		ug/m³	0.44	0.44	0.898	EPA TO-15	03/20/2025 16:20	03/20/2025 19:29	YR
								Certifications:	NELAC-NY12058,NJDEP-NY037		

Sample Information

Client Sample ID: IA04_032025 **York Sample ID:** 25C1275-04

York Project (SDG) No.	Client Project ID	Matrix	Collection Date/Time	Date Received
25C1275	170361307	Indoor Ambient Air	March 20, 2025 7:15 am	03/20/2025

Volatile Organics, EPA TO15 Full List

Log-in Notes:

Sample Notes:

Sample Prepared by Method: EPA TO15 PREP

CAS No.	Parameter	Result	Flag	Units	Reported to LOD/MDL	LOQ	Dilution	Reference Method	Date/Time Prepared	Date/Time Analyzed	Analyst
141-78-6	* **Ethyl acetate**	**1.3**		ug/m³	0.65	0.65	0.898	EPA TO-15	03/20/2025 16:20	03/20/2025 19:29	YR
								Certifications:			
100-41-4	**Ethyl Benzene**	**0.70**		ug/m³	0.39	0.39	0.898	EPA TO-15	03/20/2025 16:20	03/20/2025 19:29	YR
								Certifications:	NELAC-NY12058,NJDEP-NY037		
87-68-3	Hexachlorobutadiene	ND		ug/m³	0.96	0.96	0.898	EPA TO-15	03/20/2025 16:20	03/20/2025 19:29	YR
								Certifications:	NELAC-NY12058,NJDEP-NY037		
67-63-0	**Isopropanol**	**1.9**		ug/m³	0.44	1.3	0.898	EPA TO-15	03/20/2025 16:20	03/20/2025 19:29	YR
								Certifications:	NELAC-NY12058,NJDEP-NY037		
80-62-6	Methyl Methacrylate	ND		ug/m³	0.37	0.37	0.898	EPA TO-15	03/20/2025 16:20	03/20/2025 19:29	YR
								Certifications:	NELAC-NY12058,NJDEP-NY037		
1634-04-4	Methyl tert-butyl ether (MTBE)	ND		ug/m³	0.32	0.32	0.898	EPA TO-15	03/20/2025 16:20	03/20/2025 19:29	YR
								Certifications:	NELAC-NY12058,NJDEP-NY037		
75-09-2	Methylene chloride	ND		ug/m³	0.62	1.9	0.898	EPA TO-15	03/20/2025 16:20	03/20/2025 19:29	YR
								Certifications:	NELAC-NY12058,NJDEP-NY037		
91-20-3	* Naphthalene	ND		ug/m³	0.94	0.94	0.898	EPA TO-15	03/20/2025 16:20	03/20/2025 19:29	YR
								Certifications:	NJDEP-NY037		
142-82-5	**n-Heptane**	**0.55**		ug/m³	0.37	0.37	0.898	EPA TO-15	03/20/2025 16:20	03/20/2025 19:29	YR
								Certifications:	NELAC-NY12058,NJDEP-NY037		
110-54-3	**n-Hexane**	**0.85**		ug/m³	0.32	0.32	0.898	EPA TO-15	03/20/2025 16:20	03/20/2025 19:29	YR
								Certifications:	NELAC-NY12058,NJDEP-NY037		
95-47-6	**o-Xylene**	**1.2**		ug/m³	0.39	0.39	0.898	EPA TO-15	03/20/2025 16:20	03/20/2025 19:29	YR
								Certifications:	NELAC-NY12058,NJDEP-NY037		
179601-23-1	**p- & m- Xylenes**	**2.8**	ICVE	ug/m³	0.78	0.78	0.898	EPA TO-15	03/20/2025 16:20	03/20/2025 19:29	YR
								Certifications:	NELAC-NY12058,NJDEP-NY037		
622-96-8	* **p-Ethyltoluene**	**2.1**		ug/m³	0.44	0.44	0.898	EPA TO-15	03/20/2025 16:20	03/20/2025 19:29	YR
								Certifications:			
115-07-1	* Propylene	ND		ug/m³	0.15	0.15	0.898	EPA TO-15	03/20/2025 16:20	03/20/2025 19:29	YR
								Certifications:			
100-42-5	Styrene	ND		ug/m³	0.38	0.38	0.898	EPA TO-15	03/20/2025 16:20	03/20/2025 19:29	YR
								Certifications:	NELAC-NY12058,NJDEP-NY037		
127-18-4	Tetrachloroethylene	ND		ug/m³	0.61	0.61	0.898	EPA TO-15	03/20/2025 16:20	03/20/2025 19:29	YR
								Certifications:	NELAC-NY12058,NJDEP-NY037		
109-99-9	* Tetrahydrofuran	ND		ug/m³	0.53	0.53	0.898	EPA TO-15	03/20/2025 16:20	03/20/2025 19:29	YR
								Certifications:			
108-88-3	**Toluene**	**2.4**		ug/m³	0.34	0.34	0.898	EPA TO-15	03/20/2025 16:20	03/20/2025 19:29	YR
								Certifications:	NELAC-NY12058,NJDEP-NY037		
156-60-5	trans-1,2-Dichloroethylene	ND		ug/m³	0.36	0.36	0.898	EPA TO-15	03/20/2025 16:20	03/20/2025 19:29	YR
								Certifications:	NELAC-NY12058,NJDEP-NY037		
10061-02-6	trans-1,3-Dichloropropylene	ND		ug/m³	0.41	0.41	0.898	EPA TO-15	03/20/2025 16:20	03/20/2025 19:29	YR
								Certifications:	NELAC-NY12058,NJDEP-NY037		
79-01-6	Trichloroethylene	ND		ug/m³	0.12	0.12	0.898	EPA TO-15	03/20/2025 16:20	03/20/2025 19:29	YR
								Certifications:	NELAC-NY12058,NJDEP-NY037		
75-69-4	**Trichlorofluoromethane (Freon 11)**	**1.1**		ug/m³	0.50	0.50	0.898	EPA TO-15	03/20/2025 16:20	03/20/2025 19:29	YR
								Certifications:	NELAC-NY12058,NJDEP-NY037		

Sample Information

Client Sample ID: IA04_032025 **York Sample ID:** 25C1275-04

York Project (SDG) No.	Client Project ID	Matrix	Collection Date/Time	Date Received
25C1275	170361307	Indoor Ambient Air	March 20, 2025 7:15 am	03/20/2025

Volatile Organics, EPA TO15 Full List

Log-in Notes:

Sample Notes:

Sample Prepared by Method: EPA TO15 PREP

CAS No.	Parameter	Result	Flag	Units	Reported to LOD/MDL	LOQ	Dilution	Reference Method	Date/Time Prepared	Date/Time Analyzed	Analyst
108-05-4	Vinyl acetate	ND	ICVE, TO-LCS -L	ug/m³	0.32	0.32	0.898	EPA TO-15	03/20/2025 16:20	03/20/2025 19:29	YR
								Certifications:	NELAC-NY12058,NJDEP-NY037		
593-60-2	Vinyl bromide	ND		ug/m³	0.39	0.39	0.898	EPA TO-15	03/20/2025 16:20	03/20/2025 19:29	YR
								Certifications:	NELAC-NY12058,NJDEP-NY037		
75-01-4	Vinyl Chloride	ND		ug/m³	0.11	0.11	0.898	EPA TO-15	03/20/2025 16:20	03/20/2025 19:29	YR
								Certifications:	NELAC-NY12058,NJDEP-NY037		

Sample Information

Client Sample ID: AA01_032025 **York Sample ID:** 25C1275-05

York Project (SDG) No.	Client Project ID	Matrix	Collection Date/Time	Date Received
25C1275	170361307	Outdoor Ambient Air	March 20, 2025 7:10 am	03/20/2025

Volatile Organics, EPA TO15 Full List

Log-in Notes:

Sample Notes:

Sample Prepared by Method: EPA TO15 PREP

CAS No.	Parameter	Result	Flag	Units	Reported to LOD/MDL	LOQ	Dilution	Reference Method	Date/Time Prepared	Date/Time Analyzed	Analyst
630-20-6	* 1,1,1,2-Tetrachloroethane	ND		ug/m³	0.57	0.57	0.837	EPA TO-15 Certifications:	03/20/2025 16:20	03/20/2025 20:15	YR
71-55-6	1,1,1-Trichloroethane	ND		ug/m³	0.46	0.46	0.837	EPA TO-15 Certifications: NELAC-NY12058,NJDEP-NY037	03/20/2025 16:20	03/20/2025 20:15	YR
79-34-5	1,1,2,2-Tetrachloroethane	ND		ug/m³	0.57	0.57	0.837	EPA TO-15 Certifications: NELAC-NY12058,NJDEP-NY037	03/20/2025 16:20	03/20/2025 20:15	YR
76-13-1	1,1,2-Trichloro-1,2,2-trifluoroethane (Freon 113)	ND		ug/m³	0.64	0.64	0.837	EPA TO-15 Certifications: NELAC-NY12058,NJDEP-NY037	03/20/2025 16:20	03/20/2025 20:15	YR
79-00-5	1,1,2-Trichloroethane	ND		ug/m³	0.46	0.46	0.837	EPA TO-15 Certifications: NELAC-NY12058,NJDEP-NY037	03/20/2025 16:20	03/20/2025 20:15	YR
75-34-3	1,1-Dichloroethane	ND		ug/m³	0.34	0.34	0.837	EPA TO-15 Certifications: NELAC-NY12058,NJDEP-NY037	03/20/2025 16:20	03/20/2025 20:15	YR
75-35-4	1,1-Dichloroethylene	ND		ug/m³	0.083	0.083	0.837	EPA TO-15 Certifications: NELAC-NY12058,NJDEP-NY037	03/20/2025 16:20	03/20/2025 20:15	YR
120-82-1	1,2,4-Trichlorobenzene	ND	TO-CCV	ug/m³	0.62	0.62	0.837	EPA TO-15 Certifications: NELAC-NY12058,NJDEP-NY037	03/20/2025 16:20	03/20/2025 20:15	YR
95-63-6	**1,2,4-Trimethylbenzene**	**2.6**		ug/m³	0.41	0.41	0.837	EPA TO-15 Certifications: NELAC-NY12058,NJDEP-NY037	03/20/2025 16:20	03/20/2025 20:15	YR
106-93-4	1,2-Dibromoethane	ND		ug/m³	0.64	0.64	0.837	EPA TO-15 Certifications: NELAC-NY12058,NJDEP-NY037	03/20/2025 16:20	03/20/2025 20:15	YR
95-50-1	1,2-Dichlorobenzene	ND		ug/m³	0.50	0.50	0.837	EPA TO-15 Certifications: NELAC-NY12058,NJDEP-NY037	03/20/2025 16:20	03/20/2025 20:15	YR
107-06-2	1,2-Dichloroethane	ND		ug/m³	0.34	0.34	0.837	EPA TO-15 Certifications: NELAC-NY12058,NJDEP-NY037	03/20/2025 16:20	03/20/2025 20:15	YR
78-87-5	1,2-Dichloropropane	ND		ug/m³	0.39	0.39	0.837	EPA TO-15 Certifications: NELAC-NY12058,NJDEP-NY037	03/20/2025 16:20	03/20/2025 20:15	YR
76-14-2	1,2-Dichlorotetrafluoroethane	ND		ug/m³	0.59	0.59	0.837	EPA TO-15 Certifications: NELAC-NY12058,NJDEP-NY037	03/20/2025 16:20	03/20/2025 20:15	YR
108-67-8	**1,3,5-Trimethylbenzene**	**0.66**		ug/m³	0.41	0.41	0.837	EPA TO-15 Certifications: NELAC-NY12058,NJDEP-NY037	03/20/2025 16:20	03/20/2025 20:15	YR
106-99-0	1,3-Butadiene	ND		ug/m³	0.56	0.56	0.837	EPA TO-15 Certifications: NELAC-NY12058,NJDEP-NY037	03/20/2025 16:20	03/20/2025 20:15	YR
541-73-1	1,3-Dichlorobenzene	ND		ug/m³	0.50	0.50	0.837	EPA TO-15 Certifications: NELAC-NY12058,NJDEP-NY037	03/20/2025 16:20	03/20/2025 20:15	YR
142-28-9	* 1,3-Dichloropropane	ND		ug/m³	0.39	0.39	0.837	EPA TO-15 Certifications:	03/20/2025 16:20	03/20/2025 20:15	YR
106-46-7	1,4-Dichlorobenzene	ND		ug/m³	0.50	0.50	0.837	EPA TO-15 Certifications: NELAC-NY12058,NJDEP-NY037	03/20/2025 16:20	03/20/2025 20:15	YR
123-91-1	1,4-Dioxane	ND		ug/m³	0.60	0.60	0.837	EPA TO-15 Certifications: NELAC-NY12058,NJDEP-NY037	03/20/2025 16:20	03/20/2025 20:15	YR
540-84-1	* **2,2,4-Trimethylpentane**	**0.27**		ug/m³	0.098	0.20	0.837	EPA TO-15 Certifications:	03/20/2025 16:20	03/20/2025 20:15	YR

Sample Information

Client Sample ID: AA01_032025 **York Sample ID:** 25C1275-05

York Project (SDG) No.	Client Project ID	Matrix	Collection Date/Time	Date Received
25C1275	170361307	Outdoor Ambient Air	March 20, 2025 7:10 am	03/20/2025

Volatile Organics, EPA TO15 Full List

Log-in Notes:

Sample Notes:

Sample Prepared by Method: EPA TO15 PREP

CAS No.	Parameter	Result	Flag	Units	Reported to LOD/MDL	LOQ	Dilution	Reference Method	Date/Time Prepared	Date/Time Analyzed	Analyst
78-93-3	**2-Butanone**	**0.57**		ug/m³	0.25	0.25	0.837	EPA TO-15	03/20/2025 16:20	03/20/2025 20:15	YR
								Certifications:	NELAC-NY12058,NJDEP-NY037		
591-78-6	* 2-Hexanone	ND		ug/m³	0.69	0.69	0.837	EPA TO-15	03/20/2025 16:20	03/20/2025 20:15	YR
								Certifications:			
107-05-1	3-Chloropropene	ND		ug/m³	1.3	1.3	0.837	EPA TO-15	03/20/2025 16:20	03/20/2025 20:15	YR
								Certifications:	NELAC-NY12058,NJDEP-NY037		
108-10-1	**4-Methyl-2-pentanone**	**0.65**		ug/m³	0.34	0.34	0.837	EPA TO-15	03/20/2025 16:20	03/20/2025 20:15	YR
								Certifications:	NELAC-NY12058,NJDEP-NY037		
67-64-1	**Acetone**	**36**		ug/m³	0.40	1.6	0.837	EPA TO-15	03/20/2025 16:20	03/20/2025 20:15	YR
								Certifications:	NELAC-NY12058,NJDEP-NY037		
107-13-1	Acrylonitrile	ND		ug/m³	0.18	2.4	0.837	EPA TO-15	03/20/2025 16:20	03/20/2025 20:15	YR
								Certifications:	NELAC-NY12058,NJDEP-NY037		
71-43-2	**Benzene**	**0.43**		ug/m³	0.27	0.27	0.837	EPA TO-15	03/20/2025 16:20	03/20/2025 20:15	YR
								Certifications:	NELAC-NY12058,NJDEP-NY037		
100-44-7	Benzyl chloride	ND	TO-CCV	ug/m³	0.43	0.43	0.837	EPA TO-15	03/20/2025 16:20	03/20/2025 20:15	YR
								Certifications:	NELAC-NY12058,NJDEP-NY037		
75-27-4	Bromodichloromethane	ND		ug/m³	0.56	0.56	0.837	EPA TO-15	03/20/2025 16:20	03/20/2025 20:15	YR
								Certifications:	NELAC-NY12058,NJDEP-NY037		
75-25-2	Bromoform	ND		ug/m³	0.87	0.87	0.837	EPA TO-15	03/20/2025 16:20	03/20/2025 20:15	YR
								Certifications:	NELAC-NY12058,NJDEP-NY037		
74-83-9	Bromomethane	ND		ug/m³	0.33	0.33	0.837	EPA TO-15	03/20/2025 16:20	03/20/2025 20:15	YR
								Certifications:	NELAC-NY12058,NJDEP-NY037		
75-15-0	Carbon disulfide	ND		ug/m³	0.26	0.26	0.837	EPA TO-15	03/20/2025 16:20	03/20/2025 20:15	YR
								Certifications:	NELAC-NY12058,NJDEP-NY037		
56-23-5	**Carbon tetrachloride**	**0.37**		ug/m³	0.13	0.13	0.837	EPA TO-15	03/20/2025 16:20	03/20/2025 20:15	YR
								Certifications:	NELAC-NY12058,NJDEP-NY037		
108-90-7	Chlorobenzene	ND		ug/m³	0.39	0.39	0.837	EPA TO-15	03/20/2025 16:20	03/20/2025 20:15	YR
								Certifications:	NELAC-NY12058,NJDEP-NY037		
75-00-3	Chloroethane	ND		ug/m³	0.22	0.22	0.837	EPA TO-15	03/20/2025 16:20	03/20/2025 20:15	YR
								Certifications:	NELAC-NY12058,NJDEP-NY037		
67-66-3	Chloroform	ND		ug/m³	0.41	0.41	0.837	EPA TO-15	03/20/2025 16:20	03/20/2025 20:15	YR
								Certifications:	NELAC-NY12058,NJDEP-NY037		
74-87-3	**Chloromethane**	**1.2**		ug/m³	0.17	0.17	0.837	EPA TO-15	03/20/2025 16:20	03/20/2025 20:15	YR
								Certifications:	NELAC-NY12058,NJDEP-NY037		
156-59-2	cis-1,2-Dichloroethylene	ND		ug/m³	0.083	0.083	0.837	EPA TO-15	03/20/2025 16:20	03/20/2025 20:15	YR
								Certifications:	NELAC-NY12058,NJDEP-NY037		
10061-01-5	cis-1,3-Dichloropropylene	ND		ug/m³	0.38	0.38	0.837	EPA TO-15	03/20/2025 16:20	03/20/2025 20:15	YR
								Certifications:	NELAC-NY12058,NJDEP-NY037		
110-82-7	Cyclohexane	ND		ug/m³	0.29	0.29	0.837	EPA TO-15	03/20/2025 16:20	03/20/2025 20:15	YR
								Certifications:	NELAC-NY12058,NJDEP-NY037		
124-48-1	Dibromochloromethane	ND		ug/m³	0.71	0.71	0.837	EPA TO-15	03/20/2025 16:20	03/20/2025 20:15	YR
								Certifications:	NELAC-NY12058,NJDEP-NY037		
75-71-8	**Dichlorodifluoromethane**	**1.9**		ug/m³	0.41	0.41	0.837	EPA TO-15	03/20/2025 16:20	03/20/2025 20:15	YR
								Certifications:	NELAC-NY12058,NJDEP-NY037		

Sample Information

Client Sample ID: AA01_032025 **York Sample ID:** 25C1275-05

York Project (SDG) No.	Client Project ID	Matrix	Collection Date/Time	Date Received
25C1275	170361307	Outdoor Ambient Air	March 20, 2025 7:10 am	03/20/2025

Volatile Organics, EPA TO15 Full List

Log-in Notes:

Sample Notes:

Sample Prepared by Method: EPA TO15 PREP

CAS No.	Parameter	Result	Flag	Units	Reported to LOD/MDL	LOQ	Dilution	Reference Method	Date/Time Prepared	Date/Time Analyzed	Analyst
141-78-6	*** Ethyl acetate**	**3.8**		ug/m³	0.60	0.60	0.837	EPA TO-15	03/20/2025 16:20	03/20/2025 20:15	YR
								Certifications:			
100-41-4	**Ethyl Benzene**	**0.44**		ug/m³	0.36	0.36	0.837	EPA TO-15	03/20/2025 16:20	03/20/2025 20:15	YR
								Certifications:	NELAC-NY12058,NJDEP-NY037		
87-68-3	Hexachlorobutadiene	ND		ug/m³	0.89	0.89	0.837	EPA TO-15	03/20/2025 16:20	03/20/2025 20:15	YR
								Certifications:	NELAC-NY12058,NJDEP-NY037		
67-63-0	**Isopropanol**	**7.8**		ug/m³	0.41	1.2	0.837	EPA TO-15	03/20/2025 16:20	03/20/2025 20:15	YR
								Certifications:	NELAC-NY12058,NJDEP-NY037		
80-62-6	Methyl Methacrylate	ND		ug/m³	0.34	0.34	0.837	EPA TO-15	03/20/2025 16:20	03/20/2025 20:15	YR
								Certifications:	NELAC-NY12058,NJDEP-NY037		
1634-04-4	Methyl tert-butyl ether (MTBE)	ND		ug/m³	0.30	0.30	0.837	EPA TO-15	03/20/2025 16:20	03/20/2025 20:15	YR
								Certifications:	NELAC-NY12058,NJDEP-NY037		
75-09-2	Methylene chloride	ND		ug/m³	0.58	1.7	0.837	EPA TO-15	03/20/2025 16:20	03/20/2025 20:15	YR
								Certifications:	NELAC-NY12058,NJDEP-NY037		
91-20-3	* Naphthalene	ND		ug/m³	0.88	0.88	0.837	EPA TO-15	03/20/2025 16:20	03/20/2025 20:15	YR
								Certifications:	NJDEP-NY037		
142-82-5	n-Heptane	ND		ug/m³	0.34	0.34	0.837	EPA TO-15	03/20/2025 16:20	03/20/2025 20:15	YR
								Certifications:	NELAC-NY12058,NJDEP-NY037		
110-54-3	**n-Hexane**	**0.44**		ug/m³	0.30	0.30	0.837	EPA TO-15	03/20/2025 16:20	03/20/2025 20:15	YR
								Certifications:	NELAC-NY12058,NJDEP-NY037		
95-47-6	**o-Xylene**	**0.69**		ug/m³	0.36	0.36	0.837	EPA TO-15	03/20/2025 16:20	03/20/2025 20:15	YR
								Certifications:	NELAC-NY12058,NJDEP-NY037		
179601-23-1	**p- & m- Xylenes**	**1.8**	ICVE	ug/m³	0.73	0.73	0.837	EPA TO-15	03/20/2025 16:20	03/20/2025 20:15	YR
								Certifications:	NELAC-NY12058,NJDEP-NY037		
622-96-8	*** p-Ethyltoluene**	**1.4**		ug/m³	0.41	0.41	0.837	EPA TO-15	03/20/2025 16:20	03/20/2025 20:15	YR
								Certifications:			
115-07-1	* Propylene	ND		ug/m³	0.14	0.14	0.837	EPA TO-15	03/20/2025 16:20	03/20/2025 20:15	YR
								Certifications:			
100-42-5	Styrene	ND		ug/m³	0.36	0.36	0.837	EPA TO-15	03/20/2025 16:20	03/20/2025 20:15	YR
								Certifications:	NELAC-NY12058,NJDEP-NY037		
127-18-4	Tetrachloroethylene	ND		ug/m³	0.57	0.57	0.837	EPA TO-15	03/20/2025 16:20	03/20/2025 20:15	YR
								Certifications:	NELAC-NY12058,NJDEP-NY037		
109-99-9	* Tetrahydrofuran	ND		ug/m³	0.49	0.49	0.837	EPA TO-15	03/20/2025 16:20	03/20/2025 20:15	YR
								Certifications:			
108-88-3	**Toluene**	**1.3**		ug/m³	0.32	0.32	0.837	EPA TO-15	03/20/2025 16:20	03/20/2025 20:15	YR
								Certifications:	NELAC-NY12058,NJDEP-NY037		
156-60-5	trans-1,2-Dichloroethylene	ND		ug/m³	0.33	0.33	0.837	EPA TO-15	03/20/2025 16:20	03/20/2025 20:15	YR
								Certifications:	NELAC-NY12058,NJDEP-NY037		
10061-02-6	trans-1,3-Dichloropropylene	ND		ug/m³	0.38	0.38	0.837	EPA TO-15	03/20/2025 16:20	03/20/2025 20:15	YR
								Certifications:	NELAC-NY12058,NJDEP-NY037		
79-01-6	Trichloroethylene	ND		ug/m³	0.11	0.11	0.837	EPA TO-15	03/20/2025 16:20	03/20/2025 20:15	YR
								Certifications:	NELAC-NY12058,NJDEP-NY037		
75-69-4	**Trichlorofluoromethane (Freon 11)**	**0.99**		ug/m³	0.47	0.47	0.837	EPA TO-15	03/20/2025 16:20	03/20/2025 20:15	YR
								Certifications:	NELAC-NY12058,NJDEP-NY037		

Sample Information

Client Sample ID: AA01_032025 **York Sample ID:** 25C1275-05

York Project (SDG) No.	Client Project ID	Matrix	Collection Date/Time	Date Received
25C1275	170361307	Outdoor Ambient Air	March 20, 2025 7:10 am	03/20/2025

Volatile Organics, EPA TO15 Full List

Log-in Notes:

Sample Notes:

Sample Prepared by Method: EPA TO15 PREP

CAS No.	Parameter	Result	Flag	Units	Reported to LOD/MDL	LOQ	Dilution	Reference Method	Date/Time Prepared	Date/Time Analyzed	Analyst
108-05-4	Vinyl acetate	ND	ICVE, TO-LCS -L	ug/m³	0.29	0.29	0.837	EPA TO-15	03/20/2025 16:20	03/20/2025 20:15	YR
								Certifications:	NELAC-NY12058,NJDEP-NY037		
593-60-2	Vinyl bromide	ND		ug/m³	0.37	0.37	0.837	EPA TO-15	03/20/2025 16:20	03/20/2025 20:15	YR
								Certifications:	NELAC-NY12058,NJDEP-NY037		
75-01-4	Vinyl Chloride	ND		ug/m³	0.11	0.11	0.837	EPA TO-15	03/20/2025 16:20	03/20/2025 20:15	YR
								Certifications:	NELAC-NY12058,NJDEP-NY037		

Analytical Batch Summary

Batch ID: BC51266 **Preparation Method:** EPA TO15 PREP **Prepared By:** BMC

YORK Sample ID	Client Sample ID	Preparation Date
25C1102-01	CAN 49577 / FC 20932	03/15/25
25C1102-02	CAN 51008 / FC 19431	03/15/25
25C1102-04	CAN 49976 / FC 19415	03/15/25
25C1102-05	CAN 49998 / FC 20927	03/15/25
25C1102-06	CAN 34501 / FC 17190	03/15/25
BC51266-BLK1	Blank	03/15/25
BC51266-BS1	LCS	03/15/25

Batch ID: BC51555 **Preparation Method:** EPA TO15 PREP **Prepared By:** BMC

YORK Sample ID	Client Sample ID	Preparation Date
25C1275-01	IA01_032025	03/20/25
25C1275-02	IA02_032025	03/20/25
25C1275-03	IA03_032025	03/20/25
25C1275-04	IA04_032025	03/20/25
25C1275-05	AA01_032025	03/20/25
BC51555-BLK1	Blank	03/20/25
BC51555-BS1	LCS	03/20/25

Volatile Organic Compounds in Air by GC/MS - Quality Control Data

York Analytical Laboratories, Inc. - Stratford

Analyte	Result	Reporting Limit	Units	Spike Level	Source* Result	%REC	%REC Limits	Flag	RPD	RPD Limit	Flag
Batch BC51266 - EPA TO15 PREP											
Blank (BC51266-BLK1) Blank									Prepared & Analyzed: 03/15/2025		
1,1,1,2-Tetrachloroethane	ND	0.69	ug/m³								
1,1,1-Trichloroethane	ND	0.55	"								
1,1,2,2-Tetrachloroethane	ND	0.69	"								
1,1,2-Trichloro-1,2,2-trifluoroethane (Freon 113)	ND	0.77	"								
1,1,2-Trichloroethane	ND	0.55	"								
1,1-Dichloroethane	ND	0.40	"								
1,1-Dichloroethylene	ND	0.099	"								
1,2,4-Trichlorobenzene	ND	0.74	"								
1,2,4-Trimethylbenzene	ND	0.49	"								
1,2-Dibromoethane	ND	0.77	"								
1,2-Dichlorobenzene	ND	0.60	"								
1,2-Dichloroethane	ND	0.40	"								
1,2-Dichloropropane	ND	0.46	"								
1,2-Dichlorotetrafluoroethane	ND	0.70	"								
1,3,5-Trimethylbenzene	ND	0.49	"								
1,3-Butadiene	ND	0.66	"								
1,3-Dichlorobenzene	ND	0.60	"								
1,3-Dichloropropane	ND	0.46	"								
1,4-Dichlorobenzene	ND	0.60	"								
1,4-Dioxane	ND	0.72	"								
2,2,4-Trimethylpentane	ND	0.23	"								
2-Butanone	ND	0.29	"								
2-Hexanone	ND	0.82	"								
3-Chloropropene	ND	1.6	"								
4-Methyl-2-pentanone	ND	0.41	"								
Acetone	ND	1.9	"								
Acrylonitrile	ND	2.8	"								
Benzene	ND	0.32	"								
Benzyl chloride	ND	0.52	"								
Bromodichloromethane	ND	0.67	"								
Bromoform	ND	1.0	"								
Bromomethane	ND	0.39	"								
Carbon disulfide	ND	0.31	"								
Carbon tetrachloride	ND	0.16	"								
Chlorobenzene	ND	0.46	"								
Chloroethane	ND	0.26	"								
Chloroform	ND	0.49	"								
Chloromethane	ND	0.21	"								
cis-1,2-Dichloroethylene	ND	0.099	"								
cis-1,3-Dichloropropylene	ND	0.45	"								
Cyclohexane	ND	0.34	"								
Dibromochloromethane	ND	0.85	"								
Dichlorodifluoromethane	ND	0.49	"								
Ethyl acetate	ND	0.72	"								
Ethyl Benzene	ND	0.43	"								
Hexachlorobutadiene	ND	1.1	"								
Isopropanol	0.88	1.5	"								
Methyl Methacrylate	ND	0.41	"								
Methyl tert-butyl ether (MTBE)	ND	0.36	"								
Methylene chloride	ND	2.1	"								

Volatile Organic Compounds in Air by GC/MS - Quality Control Data

York Analytical Laboratories, Inc. - Stratford

Analyte	Result	Reporting Limit	Units	Spike Level	Source* Result	%REC	%REC Limits	Flag	RPD	RPD Limit	Flag
Batch BC51266 - EPA TO15 PREP											
Blank (BC51266-BLK1) Blank								Prepared & Analyzed: 03/15/2025			
Naphthalene	ND	1.0	ug/m³								
n-Heptane	ND	0.41	"								
n-Hexane	ND	0.35	"								
o-Xylene	ND	0.43	"								
p- & m- Xylenes	ND	0.87	"								
p-Ethyltoluene	ND	0.49	"								
Propylene	ND	0.17	"								
Styrene	ND	0.43	"								
Tetrachloroethylene	ND	0.68	"								
Tetrahydrofuran	ND	0.59	"								
Toluene	ND	0.38	"								
trans-1,2-Dichloroethylene	ND	0.40	"								
trans-1,3-Dichloropropylene	ND	0.45	"								
Trichloroethylene	ND	0.13	"								
Trichlorofluoromethane (Freon 11)	ND	0.56	"								
Vinyl acetate	ND	0.35	"								
Vinyl bromide	ND	0.44	"								
Vinyl Chloride	ND	0.13	"								
LCS (BC51266-BS1) LCS								Prepared & Analyzed: 03/15/2025			
1,1,1,2-Tetrachloroethane	10.8		ppbv	10.0		108	70-130				
1,1,1-Trichloroethane	9.41		"	10.0		94.1	70-130				
1,1,2,2-Tetrachloroethane	11.2		"	10.0		112	70-130				
1,1,2-Trichloro-1,2,2-trifluoroethane (Freon 113)	8.91		"	10.0		89.1	70-130				
1,1,2-Trichloroethane	10.4		"	10.0		104	70-130				
1,1-Dichloroethane	9.52		"	10.0		95.2	70-130				
1,1-Dichloroethylene	9.77		"	10.0		97.7	70-130				
1,2,4-Trichlorobenzene	6.04		"	10.0		60.4	70-130	Low Bias			
1,2,4-Trimethylbenzene	11.4		"	10.0		114	70-130				
1,2-Dibromoethane	10.2		"	10.0		102	70-130				
1,2-Dichlorobenzene	10.6		"	10.0		106	70-130				
1,2-Dichloroethane	11.1		"	10.0		111	70-130				
1,2-Dichloropropane	11.6		"	10.0		116	70-130				
1,2-Dichlorotetrafluoroethane	8.63		"	10.0		86.3	70-130				
1,3,5-Trimethylbenzene	11.3		"	10.0		113	70-130				
1,3-Butadiene	9.76		"	10.0		97.6	70-130				
1,3-Dichlorobenzene	11.1		"	10.0		111	70-130				
1,3-Dichloropropane	11.3		"	10.0		113	70-130				
1,4-Dichlorobenzene	11.3		"	10.0		113	70-130				
1,4-Dioxane	10.9		"	10.0		109	70-130				
2,2,4-Trimethylpentane	10.5		"	10.0		105	70-130				
2-Butanone	10.2		"	10.0		102	70-130				
2-Hexanone	12.4		"	10.0		124	70-130				
3-Chloropropene	10.8		"	10.0		108	70-130				
4-Methyl-2-pentanone	12.5		"	10.0		125	70-130				
Acetone	9.79		"	10.0		97.9	70-130				
Acrylonitrile	8.99		"	10.0		89.9	70-130				
Benzene	9.20		"	10.0		92.0	70-130				
Benzyl chloride	8.08		"	10.0		80.8	70-130				
Bromodichloromethane	11.2		"	10.0		112	70-130				
Bromoform	12.8		"	10.0		128	70-130				

Volatile Organic Compounds in Air by GC/MS - Quality Control Data

York Analytical Laboratories, Inc. - Stratford

Analyte	Result	Reporting Limit	Units	Spike Level	Source* Result	%REC	%REC Limits	Flag	RPD	RPD Limit	Flag
Batch BC51266 - EPA TO15 PREP											
LCS (BC51266-BS1) LCS								Prepared & Analyzed: 03/15/2025			
Bromomethane	8.85		ppbv	10.0		88.5	70-130				
Carbon disulfide	9.11		"	10.0		91.1	70-130				
Carbon tetrachloride	9.45		"	10.0		94.5	70-130				
Chlorobenzene	10.8		"	10.0		108	70-130				
Chloroethane	10.1		"	10.0		101	70-130				
Chloroform	9.19		"	10.0		91.9	70-130				
Chloromethane	10.4		"	10.0		104	70-130				
cis-1,2-Dichloroethylene	9.87		"	10.0		98.7	70-130				
cis-1,3-Dichloropropylene	11.8		"	10.0		118	70-130				
Cyclohexane	9.91		"	10.0		99.1	70-130				
Dibromochloromethane	11.0		"	10.0		110	70-130				
Dichlorodifluoromethane	9.53		"	10.0		95.3	70-130				
Ethyl acetate	12.4		"	10.0		124	70-130				
Ethyl Benzene	11.4		"	10.0		114	70-130				
Hexachlorobutadiene	15.3		"	10.0		153	70-130	High Bias			
Isopropanol	8.05		"	10.0		80.5	70-130				
Methyl Methacrylate	11.1		"	10.0		111	70-130				
Methyl tert-butyl ether (MTBE)	10.1		"	10.0		101	70-130				
Methylene chloride	9.94		"	10.0		99.4	70-130				
Naphthalene	9.19		"	10.0		91.9	70-130				
n-Heptane	10.9		"	10.0		109	70-130				
n-Hexane	9.96		"	10.0		99.6	70-130				
o-Xylene	11.7		"	10.0		117	70-130				
p- & m- Xylenes	23.2		"	20.0		116	70-130				
p-Ethyltoluene	11.8		"	10.0		118	70-130				
Propylene	10.3		"	10.0		103	70-130				
Styrene	11.7		"	10.0		117	70-130				
Tetrachloroethylene	11.1		"	10.0		111	70-130				
Tetrahydrofuran	10.4		"	10.0		104	70-130				
Toluene	10.6		"	10.0		106	70-130				
trans-1,2-Dichloroethylene	9.79		"	10.0		97.9	70-130				
trans-1,3-Dichloropropylene	11.7		"	10.0		117	70-130				
Trichloroethylene	10.6		"	10.0		106	70-130				
Trichlorofluoromethane (Freon 11)	9.29		"	10.0		92.9	70-130				
Vinyl acetate	4.41		"	10.0		44.1	70-130	Low Bias			
Vinyl bromide	9.03		"	10.0		90.3	70-130				
Vinyl Chloride	9.19		"	10.0		91.9	70-130				

Volatile Organic Compounds in Air by GC/MS - Quality Control Data

York Analytical Laboratories, Inc. - Stratford

Analyte	Result	Reporting Limit	Units	Spike Level	Source* Result	%REC	%REC Limits	Flag	RPD	RPD Limit	Flag
Batch BC51555 - EPA TO15 PREP											
Blank (BC51555-BLK1) Blank									Prepared & Analyzed: 03/20/2025		
1,1,1,2-Tetrachloroethane	ND	0.69	ug/m³								
1,1,1-Trichloroethane	ND	0.55	"								
1,1,2,2-Tetrachloroethane	ND	0.69	"								
1,1,2-Trichloro-1,2,2-trifluoroethane (Freon 113)	ND	0.77	"								
1,1,2-Trichloroethane	ND	0.55	"								
1,1-Dichloroethane	ND	0.40	"								
1,1-Dichloroethylene	ND	0.099	"								
1,2,4-Trichlorobenzene	ND	0.74	"								
1,2,4-Trimethylbenzene	ND	0.49	"								
1,2-Dibromoethane	ND	0.77	"								
1,2-Dichlorobenzene	ND	0.60	"								
1,2-Dichloroethane	ND	0.40	"								
1,2-Dichloropropane	ND	0.46	"								
1,2-Dichlorotetrafluoroethane	ND	0.70	"								
1,3,5-Trimethylbenzene	ND	0.49	"								
1,3-Butadiene	ND	0.66	"								
1,3-Dichlorobenzene	ND	0.60	"								
1,3-Dichloropropane	ND	0.46	"								
1,4-Dichlorobenzene	ND	0.60	"								
1,4-Dioxane	ND	0.72	"								
2,2,4-Trimethylpentane	ND	0.23	"								
2-Butanone	ND	0.29	"								
2-Hexanone	ND	0.82	"								
3-Chloropropene	ND	1.6	"								
4-Methyl-2-pentanone	ND	0.41	"								
Acetone	ND	1.9	"								
Acrylonitrile	ND	2.8	"								
Benzene	ND	0.32	"								
Benzyl chloride	ND	0.52	"								
Bromodichloromethane	ND	0.67	"								
Bromoform	ND	1.0	"								
Bromomethane	ND	0.39	"								
Carbon disulfide	ND	0.31	"								
Carbon tetrachloride	ND	0.16	"								
Chlorobenzene	ND	0.46	"								
Chloroethane	ND	0.26	"								
Chloroform	ND	0.49	"								
Chloromethane	ND	0.21	"								
cis-1,2-Dichloroethylene	ND	0.099	"								
cis-1,3-Dichloropropylene	ND	0.45	"								
Cyclohexane	ND	0.34	"								
Dibromochloromethane	ND	0.85	"								
Dichlorodifluoromethane	ND	0.49	"								
Ethyl acetate	ND	0.72	"								
Ethyl Benzene	ND	0.43	"								
Hexachlorobutadiene	ND	1.1	"								
Isopropanol	0.91	1.5	"								
Methyl Methacrylate	ND	0.41	"								
Methyl tert-butyl ether (MTBE)	ND	0.36	"								
Methylene chloride	ND	2.1	"								
Naphthalene	ND	1.0	"								

Volatile Organic Compounds in Air by GC/MS - Quality Control Data

York Analytical Laboratories, Inc. - Stratford

Analyte	Result	Reporting Limit	Units	Spike Level	Source* Result	%REC	%REC Limits	Flag	RPD	RPD Limit	Flag
Batch BC51555 - EPA TO15 PREP											
Blank (BC51555-BLK1) Blank								Prepared & Analyzed: 03/20/2025			
n-Heptane	ND	0.41	ug/m³								
n-Hexane	ND	0.35	"								
o-Xylene	ND	0.43	"								
p- & m- Xylenes	ND	0.87	"								
p-Ethyltoluene	ND	0.49	"								
Propylene	ND	0.17	"								
Styrene	ND	0.43	"								
Tetrachloroethylene	ND	0.68	"								
Tetrahydrofuran	ND	0.59	"								
Toluene	ND	0.38	"								
trans-1,2-Dichloroethylene	ND	0.40	"								
trans-1,3-Dichloropropylene	ND	0.45	"								
Trichloroethylene	ND	0.13	"								
Trichlorofluoromethane (Freon 11)	ND	0.56	"								
Vinyl acetate	ND	0.35	"								
Vinyl bromide	ND	0.44	"								
Vinyl Chloride	ND	0.13	"								
LCS (BC51555-BS1) LCS								Prepared & Analyzed: 03/20/2025			
1,1,1,2-Tetrachloroethane	10.8		ppbv	10.0		108	70-130				
1,1,1-Trichloroethane	9.43		"	10.0		94.3	70-130				
1,1,2,2-Tetrachloroethane	11.4		"	10.0		114	70-130				
1,1,2-Trichloro-1,2,2-trifluoroethane (Freon 113)	8.91		"	10.0		89.1	70-130				
1,1,2-Trichloroethane	10.7		"	10.0		107	70-130				
1,1-Dichloroethane	9.52		"	10.0		95.2	70-130				
1,1-Dichloroethylene	9.74		"	10.0		97.4	70-130				
1,2,4-Trichlorobenzene	7.35		"	10.0		73.5	70-130				
1,2,4-Trimethylbenzene	11.5		"	10.0		115	70-130				
1,2-Dibromoethane	10.4		"	10.0		104	70-130				
1,2-Dichlorobenzene	10.5		"	10.0		105	70-130				
1,2-Dichloroethane	11.2		"	10.0		112	70-130				
1,2-Dichloropropane	12.0		"	10.0		120	70-130				
1,2-Dichlorotetrafluoroethane	8.62		"	10.0		86.2	70-130				
1,3,5-Trimethylbenzene	11.3		"	10.0		113	70-130				
1,3-Butadiene	9.74		"	10.0		97.4	70-130				
1,3-Dichlorobenzene	11.0		"	10.0		110	70-130				
1,3-Dichloropropane	11.6		"	10.0		116	70-130				
1,4-Dichlorobenzene	11.0		"	10.0		110	70-130				
1,4-Dioxane	11.0		"	10.0		110	70-130				
2,2,4-Trimethylpentane	10.5		"	10.0		105	70-130				
2-Butanone	10.2		"	10.0		102	70-130				
2-Hexanone	12.6		"	10.0		126	70-130				
3-Chloropropene	10.9		"	10.0		109	70-130				
4-Methyl-2-pentanone	12.8		"	10.0		128	70-130				
Acetone	9.65		"	10.0		96.5	70-130				
Acrylonitrile	8.69		"	10.0		86.9	70-130				
Benzene	9.21		"	10.0		92.1	70-130				
Benzyl chloride	8.09		"	10.0		80.9	70-130				
Bromodichloromethane	11.5		"	10.0		115	70-130				
Bromoform	13.1		"	10.0		131	70-130	High Bias			
Bromomethane	8.82		"	10.0		88.2	70-130				

Volatile Organic Compounds in Air by GC/MS - Quality Control Data

York Analytical Laboratories, Inc. - Stratford

Analyte	Result	Reporting Limit	Units	Spike Level	Source* Result	%REC	%REC Limits	Flag	RPD	RPD Limit	Flag
Batch BC51555 - EPA TO15 PREP											
LCS (BC51555-BS1) LCS								Prepared & Analyzed: 03/20/2025			
Carbon disulfide	9.10		ppbv	10.0		91.0	70-130				
Carbon tetrachloride	9.51		"	10.0		95.1	70-130				
Chlorobenzene	10.8		"	10.0		108	70-130				
Chloroethane	10.0		"	10.0		100	70-130				
Chloroform	9.19		"	10.0		91.9	70-130				
Chloromethane	10.2		"	10.0		102	70-130				
cis-1,2-Dichloroethylene	9.85		"	10.0		98.5	70-130				
cis-1,3-Dichloropropylene	12.2		"	10.0		122	70-130				
Cyclohexane	9.96		"	10.0		99.6	70-130				
Dibromochloromethane	11.4		"	10.0		114	70-130				
Dichlorodifluoromethane	9.54		"	10.0		95.4	70-130				
Ethyl acetate	12.6		"	10.0		126	70-130				
Ethyl Benzene	11.4		"	10.0		114	70-130				
Hexachlorobutadiene	15.1		"	10.0		151	70-130	High Bias			
Isopropanol	8.08		"	10.0		80.8	70-130				
Methyl Methacrylate	11.5		"	10.0		115	70-130				
Methyl tert-butyl ether (MTBE)	10.1		"	10.0		101	70-130				
Methylene chloride	10.0		"	10.0		100	70-130				
Naphthalene	10.3		"	10.0		103	70-130				
n-Heptane	10.9		"	10.0		109	70-130				
n-Hexane	9.94		"	10.0		99.4	70-130				
o-Xylene	11.7		"	10.0		117	70-130				
p- & m- Xylenes	23.2		"	20.0		116	70-130				
p-Ethyltoluene	11.8		"	10.0		118	70-130				
Propylene	10.3		"	10.0		103	70-130				
Styrene	11.7		"	10.0		117	70-130				
Tetrachloroethylene	11.2		"	10.0		112	70-130				
Tetrahydrofuran	10.5		"	10.0		105	70-130				
Toluene	10.8		"	10.0		108	70-130				
trans-1,2-Dichloroethylene	9.81		"	10.0		98.1	70-130				
trans-1,3-Dichloropropylene	12.0		"	10.0		120	70-130				
Trichloroethylene	10.7		"	10.0		107	70-130				
Trichlorofluoromethane (Freon 11)	9.32		"	10.0		93.2	70-130				
Vinyl acetate	5.64		"	10.0		56.4	70-130	Low Bias			
Vinyl bromide	8.99		"	10.0		89.9	70-130				
Vinyl Chloride	9.22		"	10.0		92.2	70-130				

Sample and Data Qualifiers Relating to This Work Order

TO-LCS-L	The result reported for this compound may be biased low due to its behavior in the analysis batch LCS where it recovered less 70% of the expected value.
TO-LCS-H	The result reported for this compound may be biased high due to its behavior in the analysis batch LCS where it recovered greater than 130% of the expected value.
TO-CCV	The value reported is ESTIMATED for this compound due to its behavior during continuing calibration verification (>30% Difference from initial calibration).
J	Detected below the Reporting Limit but greater than or equal to the Method Detection Limit (MDL/LOD) or in the case of a TIC, the result is an estimated concentration.
ICVE	The value reported is ESTIMATED. The value is estimated due to its behavior during initial calibration verification (recovery exceeded 30% of expected value).
Cal-E	The value reported is ESTIMATED. The value is estimated due to its behavior during initial calibration (average Rf>20%)

Definitions and Other Explanations

*	Analyte is not certified or the state of the samples origination does not offer certification for the Analyte.
ND	NOT DETECTED - the analyte is not detected at the Reported to level (LOQ/RL or LOD/MDL)
RL	REPORTING LIMIT - the minimum reportable value based upon the lowest point in the analyte calibration curve.
LOQ	LIMIT OF QUANTITATION - the minimum concentration of a target analyte that can be reported within a specified degree of confidence. This is the lowest point in an analyte calibration curve that has been subjected to all steps of the processing/analysis and verified to meet defined criteria. This is based upon NELAC 2009 Standards and applies to all analyses.
LOD	LIMIT OF DETECTION - a verified estimate of the minimum concentration of a substance in a given matrix that an analytical process can reliably detect. This is based upon NELAC 2009 Standards and applies to all analyses conducted under the auspices of EPA SW-846.
MDL	METHOD DETECTION LIMIT - a statistically derived estimate of the minimum amount of a substance an analytical system can reliably detect with a 99% confidence that the concentration of the substance is greater than zero. This is based upon 40 CFR Part 136 Appendix B and applies only to EPA 600 and 200 series methods.
Reported to	This indicates that the data for a particular analysis is reported to either the LOD/MDL, or the LOQ/RL. In cases where the "Reported to" is located above the LOD/MDL, any value between this and the LOQ represents an estimated value which is "J" flagged accordingly. This applies to volatile and semi-volatile target compounds only.
NR	Not reported
RPD	Relative Percent Difference
Wet	The data has been reported on an as-received (wet weight) basis
Low Bias	Low Bias flag indicates that the recovery of the flagged analyte is below the laboratory or regulatory lower control limit. The data user should take note that this analyte may be biased low but should evaluate multiple lines of evidence including the LCS and site-specific MS/MSD data to draw bias conclusions. In cases where no site-specific MS/MSD was requested, only the LCS data can be used to evaluate such bias.
High Bias	High Bias flag indicates that the recovery of the flagged analyte is above the laboratory or regulatory upper control limit. The data user should take note that this analyte may be biased high but should evaluate multiple lines of evidence including the LCS and site-specific MS/MSD data to draw bias conclusions. In cases where no site-specific MS/MSD was requested, only the LCS data can be used to evaluate such bias.
Non-Dir.	Non-dir. flag (Non-Directional Bias) indicates that the Relative Percent Difference (RPD) (a measure of precision) among the MS and MSD data is outside the laboratory or regulatory control limit. This alerts the data user where the MS and MSD are from site-specific samples that the RPD is high due to either non-homogeneous distribution of target analyte between the MS/MSD or indicates poor reproducibility for other reasons.

If EPA SW-846 method 8270 is included herein it is noted that the target compound N-nitrosodiphenylamine (NDPA) decomposes in the gas chromatographic inlet and cannot be separated from diphenylamine (DPA). These results could actually represent 100% DPA, 100% NDPA or some combination of the two. For this reason, York reports the combined result for n-nitrosodiphenylamine and diphenylamine for either of these compounds as a combined concentration as Diphenylamine.

If Total PCBs are detected and the target aroclors reported are "Not detected", the Total PCB value is reported due to the presence of either or both Aroclors 1262 and 1268 which are non-target aroclors for some regulatory lists.

2-chloroethylvinyl ether readily breaks down under acidic conditions. Samples that are acid preserved, including standards will exhibit breakdown. The data user should take note.

Certification for pH is no longer offered by NYDOH ELAP.

Semi-Volatile and Volatile analyses are reported down to the LOD/MDL, with values between the LOD/MDL and the LOQ being "J" flagged as estimated results.

For analyses by EPA SW-846-8270D, the Limit of Quantitation (LOQ) reported for benzidine is based upon the lowest standard used for calibration and is not a verified LOQ due to this compound's propensity for oxidative losses during extraction/concentration procedures and non-reproducible chromatographic performance.

York Analytical Laboratories, Inc.
120 Research Drive, Stratford, CT 06615 | 132-02 89th Ave Queens, NY 11418
clientservices@yorklab.com | www.yorklab.com

Field Chain-of-Custody Record - AIR

NOTE: YORK's Standard Terms & Conditions are listed on the back side of this document. This document serves as your written authorization for YORK to proceed with the analyses requested below. Your signature binds you to YORK's Standard Terms & Conditions.

YORK Project No. 25C1275

Page 1 of 1

YOUR Information	Report To:	Invoice To:
Company: Langan DPC	Company:	Company:
Address: 368 N. 4th Avenue, New York, NY 10001	Address:	Address:
Phone: 2124795400	Phone:	Phone:
Contact: Vinicius De Paula	Contact:	Contact:
E-mail: VDePaula@langan.com	E-mail:	E-mail:

YOUR Project Number: 170361307

YOUR Project Name: 514 union Street

YOUR PO#:

Turn-Around Time

- RUSH - Next Day
- RUSH - Two Day
- RUSH - Three Day
- RUSH - Four Day
- **Standard (5-7 Day)** X

24 hr (LD)

Please print clearly and legibly. All information must be complete. Samples will not be logged in and the turn-around-time clock will not begin until any questions by YORK are resolved.

Samples Collected by: (print your name above and sign below) Caroline Devin

Air Matrix Codes: AI - Indoor Ambient Air; AO - Outdoor Amb. Air; AE - Vapor Extraction Well/ Process Gas/Effluent; AS - Soil Vapor/Sub-Slab

Samples From: New York X; New Jersey; Connecticut; Pennsylvania; Other

Report / EDD Type (circle selections): Summary Report; QA Report; NY ASP A Package; NY ASP B Package; Other: | CT RCP; CT RCP DQA/DUE; NJDEP Reduced Deliv.; NJDKQP | Standard Excel EDD; EQuIS (Standard); NYSDEC EQuIS; NJDEP SRP HazSite

YORK Reg. Comp.: Compared to the following Regulation(s): (please fill in)

Certified Canisters: Batch ___ Individual X

Please enter the following REQUIRED Field Data

Reporting Units: ug/m³ ___ ppbv ___ ppmv ___

Sample Identification	Date/Time Sampled	Air Matrix	Canister Vacuum Before Sampling (in Hg)	Canister Vacuum After Sampling (in Hg)	Canister ID	Flow Cont. ID	Analysis Requested
IA01-032025	3/20/25/0740	AI	-30	-6	49998	20827	TO-15 VOCs
IA02-032025	0708	AI	-29	-6	51008	19431	
IA03-032025	0705	AI	-30	-6	34501	17190	
IA04-032025	0715	AI	-30	-6	49577	20932	
AA01-032025	0710	AO	-29	-5	49976	19415	

Comments: Please cc: datamanagement@langan.com; mburke@langan.com; janayes@langan.com; pmcmahon@langan.com; bkoontz@langan.com; cdevin@langan.com

Detection Limits Required: ≤ 1 ug/m³ ___ NYSDEC V1 Limits ___ Routine Survey ___ Other ___

Sampling Media: 6 Liter Canister X; Tedlar Bag

Samples Relinquished by / Company	Date/Time	Samples Received by / Company	Date/Time	Samples Relinquished by / Company	Date/Time
Caroline Devin/Langan	3/20/25/0858		3/20/25 8:58		3/20/25 9:45
Samples Received by / Company	Date/Time	Samples Relinquished by / Company	Date/Time	Samples Received by / Company	Date/Time
Samples Relinquished by / Company	Date/Time	Samples Received by / Company	Date/Time	Samples Received in LAB by	Date/Time
					3/20/25 9:45

ATTACHMENT G

PID SCREENING RESULTS

Date: 12/12/2024

Notes

Locations without a reading below represent 0 parts per billion (ppb)

Legend

x - General breathing height

x - Floor drain

x - MW hatch

x - Utility hatch

1574 ppb

650 ppb

55 ppb

27 ppb

21 ppb

32 ppb

382 ppb

325 ppb

EXISTING BUILDING

ROYAL PALMS

UNION STREET

Exterior Sidewalk

H1 DESIGN PLAN

1/8"=1'-0"

CONSTRUCTION NOTES CONTINUED:

- C17 Roof Drain running along the eastern wall to be relocated and tied to main sewer drain. Plumber and GC to verify exact location in field
- C18 Fire-rated Dutch Door
- C19 Shuffleboard Court 115 east railing to be removable. SK to follow.
- C20 3hr Fire-rated (See partition type)

CONSTRUCTION NOTES

- C1 2HR Fire Rated Glass Above & 2HR Fire Rated Wall below
- C2 Overhead Door - 635 Series FireKing Insulated Fire Door
- C3 Window Sprinkler System - Model WS. Used in conjunction with a fixed glazed wall assembly to provide a two-hour fire-resistance-rated nonload-bearing interior fire barrier assembly
- C4 Additional sprinkler heads on this side of partition. Number of additional sprinkler heads to be determined.
- C5 New steel lintel (See Structurals)
- C6 New Railing
- C7 Adjustable Railing
- C8 Existing Electrical Equipment to remain
- C9 Out to Grade
- C10 Drinking Fountain DF-01
- C11 New windows at existing masonry openings (See Structurals S-101 for more details)
- C12 Relocated Roof Drain Pipe
- C13 Back flow toilet to tie into public toilet line.
- C14 2HR Fire Rated Window
- C15 Power for photo booth
- C16 Slop Sink

Fire-rated Phantom Door- TBD

- ID2 POS 101 - See ID-304.1 & ID-304.2 for details
- ID3 POS 112 - See ID-308 for details
- ID4 Cabana w/ built in banquettes - See ID-302 for details
- ID5 Curtain track above - mounted on existing joists
- ID6 POS 103 - See ID-304.1 for details
- ID7 Platform 106 - See ID-301 for details
- ID8 New awnings - Awning fabricator to provide shop drawings
- ID9 Free standing millwork POS station
- ID10 Wood saddle at material transition - See finish legend
- ID11 Provide blocking for beneath platform access doors
- ID12 Material transition @ corner - See ID-313 for details
- ID13 See plumbing and hardware Schedule for bathrooms stalls type & accessories
- ID15 Bathrooms - See ID-205 for details
- ID16 Bathrooms - See ID-206 for details
- ID17 Score boards by owners - to be mounted on 4"x4" post anchored to floor.
- ID18 Signage by others
- ID19 See ID-315 for court details
- ID20 New skylight x3 - GC to provide blocking @ skylight perimeter for hanging plants support

AUTOMATIC STUDIOS
594 Broadway Suite 509 New York NY
Telephone 646 666 0846

ANDRETCHELISTCHEFFARCHITECTS
560 Broadway Suite 609 New York NY 10012
Telephone 212 431 1503 Fax 212 431 1506

1. Issue for Department of Buildings	12/19/12
2. Issue for Construction	1/14/13
3. Issue for Construction	2/8/13
4. Revised for Construction	2/11/13
5. Issue for Construction	4/3/13
⚠6. Revised for Construction	4/18/13

Royal Palm
514 Union Street, Brooklyn NY

Proposed Ground Floor Plan

Project # 12RP16

Scale: 1/8" = 1' - 0"

3 April 2013

A-001.00

Copyright © Andre Tchelistcheff Architect 2013

Date: 12/13/2024

Notes

Locations without a reading below represent 0 parts per billion (ppb)

Legend

x - General breathing height
x - Floor drain
x - MW hatch
x - Utility hatch

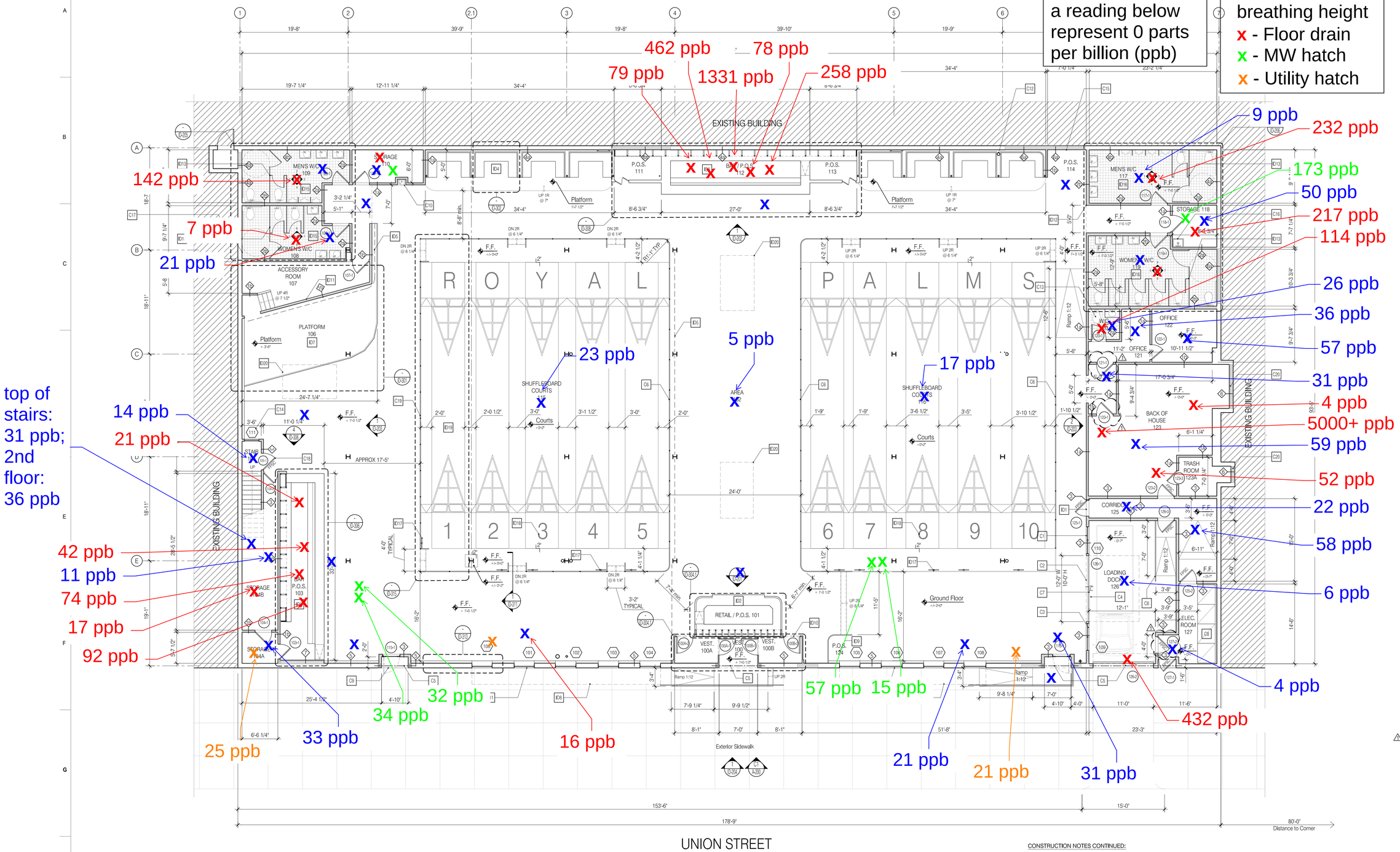

H1 DESIGN PLAN 1/8"=1'-0"

CONSTRUCTION NOTES CONTINUED:

- C17 Roof Drain running along the eastern wall to be relocated and tied to main sewer drain. Plumber and GC to verify exact location in field
- C18 Fire-rated Dutch Door
- C19 Shuffleboard Court 115 east railing to be removable. SK to follow.
- C20 3hr Fire-rated (See partition type)

CONSTRUCTION NOTES

- C1 2HR Fire Rated Glass Above & 2HR Fire Rated Wall below
- C2 Overhead Door - 635 Series FireKing Insulated Fire Door
- C3 Window Sprinkler System - Model WS. Used in conjunction with a fixed glazed wall assembly to provide a two-hour fire-resistance-rated nonload-bearing interior fire barrier assembly
- C4 Additional sprinkler heads on this side of partition. Number of additional sprinkler heads to be determined.
- C5 New steel lintel (See Structurals)
- C6 New Railing
- C7 Adjustable Railing
- C8 Existing Electrical Equipment to remain
- C9 Out to Grade
- C10 Drinking Fountain DF-01
- C11 New windows at existing masonry openings (See Structurals S-101 for more detials)
- C12 Relocated Roof Drain Pipe
- C13 Back flow toilet to tie into public toilet line.
- C14 2HR Fire Rated Window
- C15 Power for photo booth
- C16 Slop Sink
- ID1 Fire-rated Phantom Door- TBD
- ID2 POS 101 - See ID-304.1 & ID-304.2 for details
- ID3 POS 112 - See ID-308 for details
- ID4 Cabana w/ built in banquettes - See ID-302 for details
- ID5 Curtain track above - mounted on existing joists
- ID6 POS 103 - See ID-304.1 for details
- ID7 Platform 106 - See ID-301 for details
- ID8 New awnings - Awning fabricator to provide shop drawings
- Free standing millwork POS station
- Wood saddle at material transition - See finish legend
- Provide blocking for beneath platform access doors
- ID12 Material transition @ corner - See ID-313 for details
- ID13 See plumbing and hardware Schedule for bathrooms stalls type & accessories
- 5 Bathrooms - See ID-205 for details
- 6 Bathrooms - See ID-206 for details
- ID17 Score boards by owners - to be mounted on 4'x4' post anchored to floor.
- ID18 Signage by others
- ID19 See ID-315 for court details
- ID20 New skylight x3 - GC to provide blocking @ skylight perimeter for hanging plants support

AUTOMATIC STUDIOS
594 Broadway Suite 509 New York NY
Telephone 646 666 0846

ANDRETCHELISTCHEFFARCHITECTS
560 Broadway Suite 609 New York NY 10012
Telephone 212 431 1503 Fax 212 431 1506

1. Issue for Department of Buildings	12/19/12
2. Issue for Construction	1/14/13
3. Issue for Construction	2/8/13
4. Revised for Construction	2/11/13
5. Issue for Construction	4/3/13
6. Revised for Construction	4/18/13

Royal Palm
514 Union Street, Brooklyn NY

Proposed Ground Floor Plan

Project # 12RP16

Scale: 1/8" = 1' - 0"

3 April 2013

A-001.00

Copyright © Andre Tchelistcheff Architect 2013

ATTACHMENT H

VAPORDRAIN PRODUCT AND INSTALLATION SHEET

INSTALLATION INSTRUCTIONS
DRANJER™ FR2

The Dranjer™ is placed under the existing floor drain cover plate. The cover plate is then replaced.

The Dranjer™ FR2 fits floor drains from 2 to 8 inches in diameter.

To Install the Dranjer™ FR2

1. Remove the floor drain cover plate from the drain opening.
2. Clean the rim of the opening.
3. Lay a bead of caulking compound around the rim of the hole, as shown in Figure 1.
4. Hold the Dranjer™ and the cover plate together so the centers are aligned and the cover plate on top, as shown in Figures 2 and 3. Allow enough slack in the rubber flange of the Dranjer so it hangs down about 1/2 inch.
5. Lower the Dranjer™and the cover plate back into the hole. Push the floor drain cover plate back into position, pinching the rubber flange of the Dranjer underneath as it is shown in Figure 4.
6. Apply pressure to the cover plate to set it firmly.
7. Trim off the surplus rubber around the edge of the flange with a knife. **Leave tabs to facilitate removal.**
8. Leave a heavy weight on the floor drain cover plate until the caulking compound has dried.
9. Pour about one pint of water into the drain to fill the Dranjer™.

***Note:** If dirty water routinely flows through the Dranjer™, deposits may stop the sliding ring seal from working properly. Regular cleaning of the Dranjer™ will prevent this.*

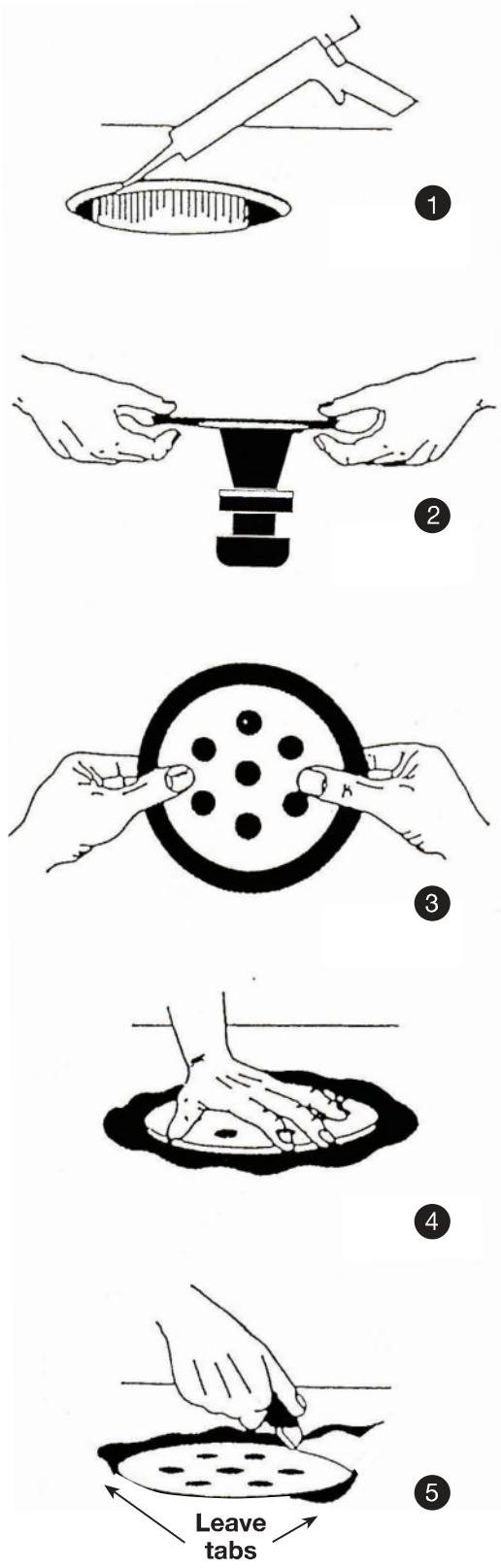

Dranjer™ Corporation

Dranjer.com

STANDARD MODEL SPECIFICATIONS

Dranjer™ Sump and Floor Seals

Model JS15 SUMP LARGE

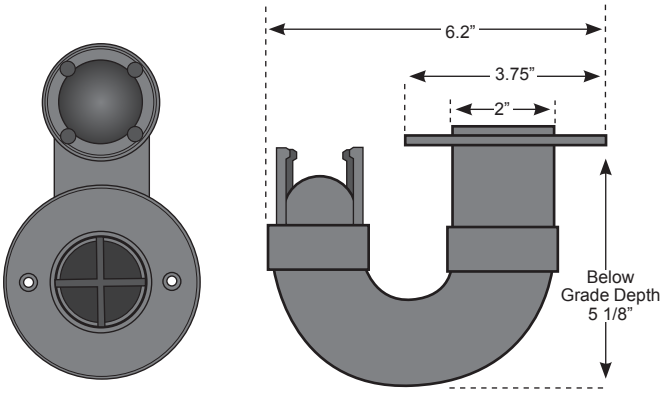

Fits into and becomes part of your sump cover. It is a one way valve that allows water to flow into the sump but prevents Radon Gas, soil gas, insects and odours from entering your living environment.

Installing the JS15 requires cutting a 2-inch hole in your sump cover. The JS15 sump valve then fastens to the underside of the sump cover using the alignment collar which protrudes around the top of the JS15.

Model JN6 DRAIN RETROFIT & NEW INSTALLATION

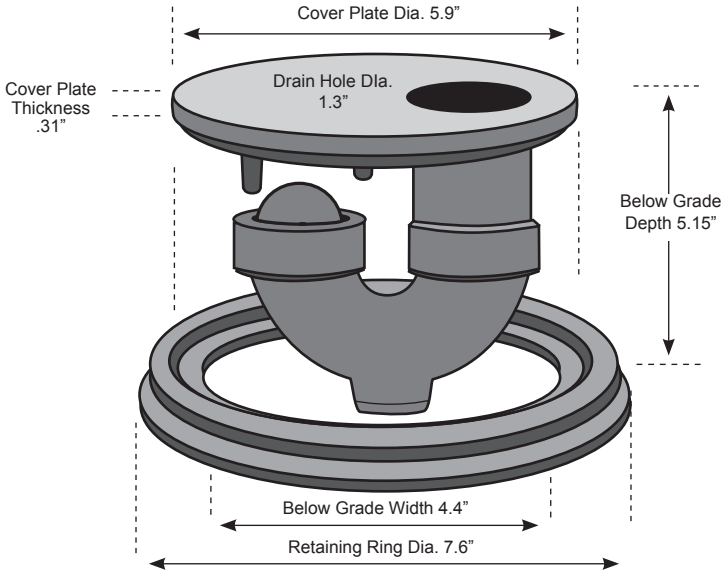

For open floor drains and catch basin drains - retaining ring to be set into concrete floor

Model DR2 SMALL DRAIN RETROFIT

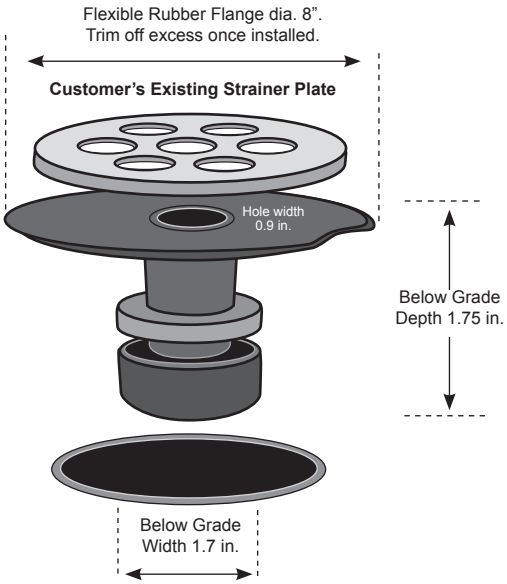

Dranjer™ Corporation

Dranjer.com

Model FN2 DRAIN NEW INSTALLATION

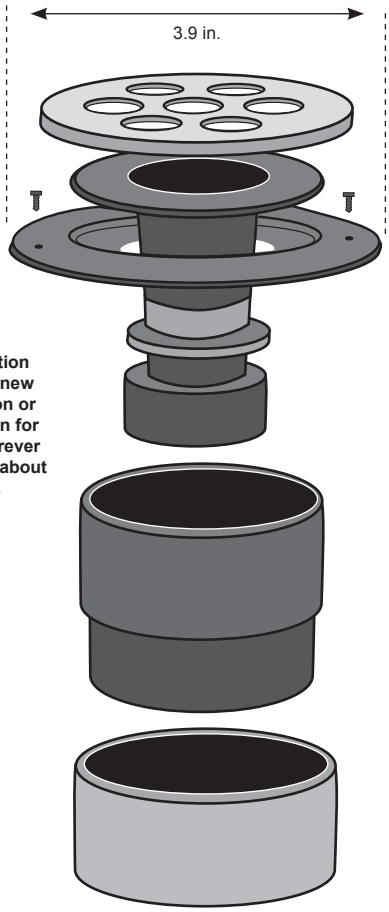

The new installation model is used in new home construction or installed as a drain for condensates wherever there is a concern about gas or odors.

Model FR2 DRAIN RETROFIT

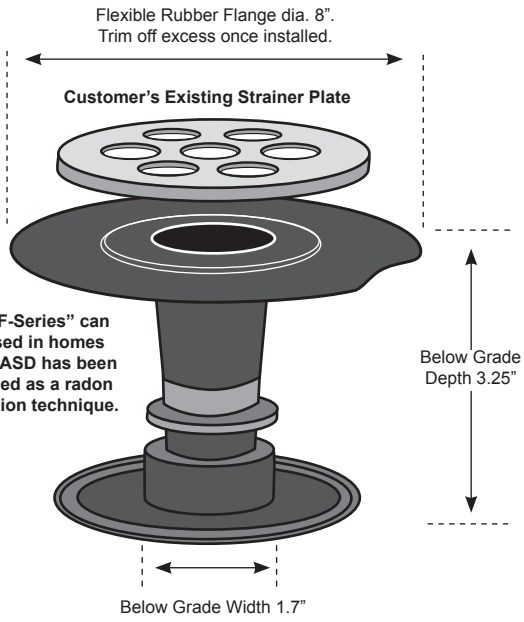

The "F-Series" can be used in homes where ASD has been included as a radon mitigation technique.

Model FS2 SUMP SMALL

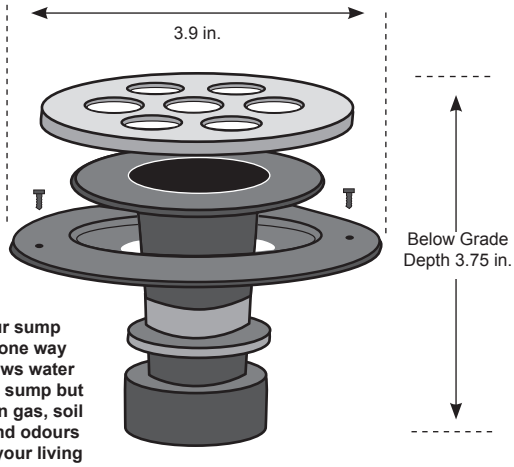

Fits into your sump cover. It is a one way valve that allows water to flow into the sump but prevents Radon gas, soil gas, insects and odours from entering your living environment.

Dranjer™ Corporation

Dranjer.com

ATTACHMENT I

AS-BUILT HVAC MODIFICATIONS

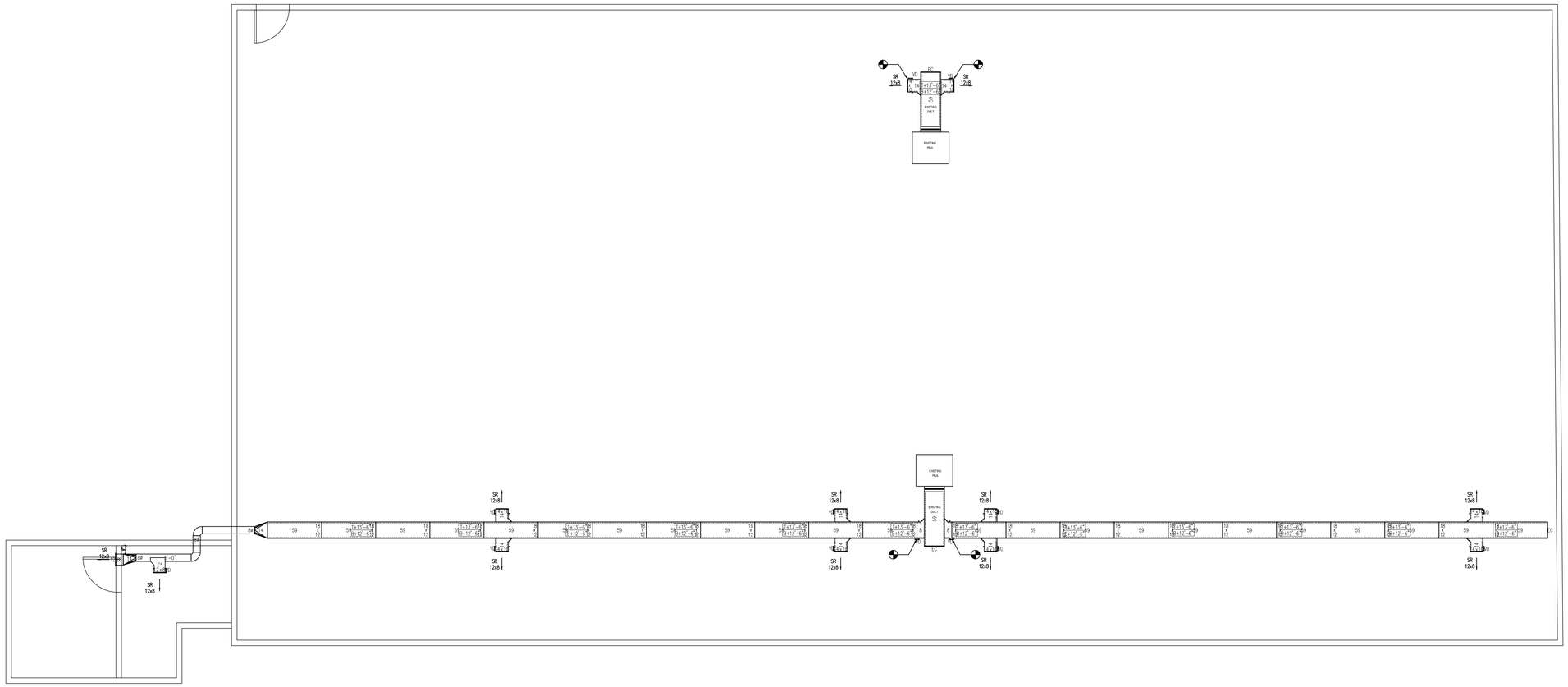
EXISTING MUA
EXISTING INLET
SR 12x8
SR 12x8
SR 12x8

ATTACHMENT J

DATA USABILITY SUMMARY REPORTS

LANGAN
ENGINEERING & ENVIRONMENTAL SERVICES

Technical Memorandum

1 University Square Drive Princeton, NJ 08540 T: 609.282.8000
Mailing Address: 1 University Square Drive Princeton, NJ 08540

To: Caroline Devin, Langan Senior Staff Engineer

From: Joe Conboy, Langan Project Chemist

Date: January 16, 2025

Re: Data Usability Summary Report
For 514 Union Street
November 2024 Indoor and Ambient Air Samples
Langan Project No.: 170361307

This memorandum presents the findings of an analytical data validation of the data generated from the analysis of air samples collected in November 2024 by Langan Engineering and Environmental Services at the 514 Union Street site. The samples were analyzed by York Analytical Laboratories, Inc. (NYSDOH NELAP registration # 12058) for volatile organic compounds (VOCs) by the methods specified below.

- VOCs by USEPA Method TO-15

Table 1, attached, summarizes the laboratory and client sample identification numbers, sample collection dates, and analytical parameters subject to review.

Validation Overview

This data validation was performed in accordance with the following guidelines, where applicable:

- USEPA Region II Standard Operating Procedure (SOP) #HW-31, "Analysis of Volatile Organic Compounds in Air Contained in Canisters by Method TO-15" (September 2016, Revision 6),
- USEPA Contract Laboratory Program "National Functional Guidelines for Organic Superfund Methods Data Review" (EPA 540- R-20-005, November 2020), and
- published analytical methodologies.

Validation includes review of the analytical data to verify that data are easily traceable and sufficiently complete to permit logical reconstruction by a qualified individual other than the originator.

The following acronyms may be used in the discussion of data-quality issues:

%D	Percent Difference	MB	Method Blank
CCV	Continuing Calibration Verification	MDL	Method Detection Limit
FB	Field Blank	MS	Matrix Spike
FD	Field Duplicate	MSD	Matrix Spike Duplicate
ICAL	Initial Calibration	RF	Response Factor
ICV	Initial Calibration Verification	RL	Reporting Limit
ISTD	Internal Standard	RPD	Relative Percent Difference
LCL	Lower Control Limit	RSD	Relative Standard Deviation
LCS	Laboratory Control Sample	TB	Trip Blank
LCSD	Laboratory Control Sample Duplicate	UCL	Upper Control Limit

Tier 1 data validation is based on completeness and compliance checks of sample-related QC results including: sample receipt documentation; analytical holding times; sample preservation; blank results (method, field, and trip); surrogate recoveries; MS/MSD recoveries and RPDs values; field duplicate RPDs, laboratory duplicate RPDs, and LCS/LCSD recoveries and RPDs. Sample delivery group 24K1863 underwent Tier 1 validation review.

As a result of the review process, the following qualifiers may be assigned to the data in accordance with the USEPA guidelines and our best professional judgment:

- **R –** The sample results are unusable. The results are rejected because of serious deficiencies in meeting quality control criteria in accordance with the applicable validation guidelines. The analyte may or may not be present in the sample.
- **J –** The analyte was positively identified above the quantitation limit, and the associated numerical value is the approximate concentration of the analyte in the sample.
- **UJ –** The analyte was not detected at or above the quantitation limit. The reported quantitation limit may be imprecise because of potential low or indeterminate bias.
- **U –** The analyte was not detected at or above the quantitation limit, or the analyte detection is impacted by blank contamination and qualified as non-detect in accordance with the applicable validation guidelines.

If any validation qualifiers are assigned, these qualifiers should supersede any laboratory-applied qualifiers. Data that is not qualified as a result of this data validation is considered acceptable on the basis of the items specified for review. Data that is qualified as "R" are considered invalid and are not technically usable for data interpretation. Data that is otherwise qualified because of minor data-quality anomalies are usable, as qualified in Table 2 (attached).

MAJOR DEFICIENCIES:

Major deficiencies include those that grossly impact data quality and necessitate the rejection of results. No major deficiencies were identified.

MINOR DEFICIENCIES:

Minor deficiencies include anomalies that directly impact data quality and necessitate qualification, but do not result in unusable data. The section below describes the minor deficiencies that were identified.

VOCs by USEPA Method TO-15

24K1863

The LCS for batch BL40674 exhibited percent recoveries below the LCL for 1,2,4-trichlorobenzene (69.9%) and vinyl acetate (59.4%). The associated results in samples IA02_112624, IA03_112624, and IA04_112624 are qualified as UJ because of potential low bias.

The LCS for batch BL40674 exhibited a percent recovery above the UCL for chloromethane (methyl chloride) (133%). The associated results in samples IA02_112624, IA03_112624, and IA04_112624 are qualified as J because of potential high bias.

The LCS for batch BL40699 exhibited a percent recovery above the UCL for ethyl acetate (131%). The associated results in samples AA01_112624 and IA01_112624 are qualified as J because of potential high bias.

The LCS for batch BL40699 exhibited a percent recovery below the LCL for vinyl acetate (54.0%). The associated results in samples AA01_112624 and IA01_112624 are qualified as UJ because of potential low bias.

OTHER DEFICIENCIES:

Other deficiencies include anomalies that do not directly impact data quality and do not necessitate qualification. The section below describes the other deficiencies that were identified.

VOCs by USEPA Method TO-15

24K1863

The individual batch canister certification for canister 49582 exhibited a detection of acrylonitrile (0.217 ug/m3). The associated results are non-detect. No qualification is necessary.

The individual batch canister certification for canister 49978 exhibited a detection of acetone (0.736 ug/m3). The associated results are >10X the contamination. No qualification is necessary.

CONCLUSION:

On the basis of this evaluation, the laboratory appears to have followed the specified analytical methods with the exception of errors discussed above. If a given fraction is not mentioned above, that means that all specified criteria were met for that parameter. All of the data packages met ASP Category B requirements.

All data are considered usable, as qualified. In addition, completeness, defined as the percentage of analytical results that are judged to be valid, is 100%.

Signed:



Joe Conboy
Senior Staff Chemist

Data Usability Summary Report
For 514 Union Street
November 2024 Indoor and Ambient Air Samples
Table 1: Sample Summary

SDG	Lab Sample ID	Client Sample ID	Sample Date	Validation Level	Analytical Parameters
24K1863	24K1863-01	AA01_112624	11/26/2024	Tier 1	USEPA Method TO-15
24K1863	24K1863-02	IA01_112624	11/26/2024	Tier 1	USEPA Method TO-15
24K1863	24K1863-03	IA02_112624	11/26/2024	Tier 1	USEPA Method TO-15
24K1863	24K1863-04	IA03_112624	11/26/2024	Tier 1	USEPA Method TO-15
24K1863	24K1863-05	IA04_112624	11/26/2024	Tier 1	USEPA Method TO-15

Data Usability Summary Report
For 514 Union Street
November 2024 Indoor and Ambient Air Samples
Table 2: Validator-Applied Qualification

SDG	Client Sample ID	Analysis	Total (T) / Dissolved (D)	CAS #	Analyte	Validator Qualifier
24K1863	AA01_112624	TO15	T	141-78-6	Ethyl Acetate	J
24K1863	AA01_112624	TO15	T	108-05-4	Vinyl Acetate	UJ
24K1863	IA01_112624	TO15	T	141-78-6	Ethyl Acetate	J
24K1863	IA01_112624	TO15	T	108-05-4	Vinyl Acetate	UJ
24K1863	IA02_112624	TO15	T	120-82-1	1,2,4-Trichlorobenzene	UJ
24K1863	IA02_112624	TO15	T	74-87-3	Chloromethane (Methyl Chloride)	J
24K1863	IA02_112624	TO15	T	108-05-4	Vinyl Acetate	UJ
24K1863	IA03_112624	TO15	T	120-82-1	1,2,4-Trichlorobenzene	UJ
24K1863	IA03_112624	TO15	T	74-87-3	Chloromethane (Methyl Chloride)	J
24K1863	IA03_112624	TO15	T	108-05-4	Vinyl Acetate	UJ
24K1863	IA04_112624	TO15	T	120-82-1	1,2,4-Trichlorobenzene	UJ
24K1863	IA04_112624	TO15	T	74-87-3	Chloromethane (Methyl Chloride)	J
24K1863	IA04_112624	TO15	T	108-05-4	Vinyl Acetate	UJ

LANGAN
ENGINEERING & ENVIRONMENTAL SERVICES

Technical Memorandum

1 University Square Drive Princeton, NJ 08540 T: 609.282.8000
Mailing Address: 1 University Square Drive Princeton, NJ 08540

To: Vinicius De Paula, Langan Senior Project Manager

From: Krzysztof Trafalski, Langan Senior Staff Chemist

Date: January 30, 2025

Re: Data Usability Summary Report
For 514 Union Street
January 2025 Indoor and Ambient Air Samples
Langan Project No.: 170361307

This memorandum presents the findings of an analytical data validation of the data generated from the analysis of air samples collected in January 2025 by Langan Engineering and Environmental Services at the 514 Union Street site. The samples were analyzed by York Analytical Laboratories, Inc. (NYSDOH NELAP registration # 12058) for volatile organic compounds (VOCs) by the methods specified below.

- VOCs by USEPA Method TO-15

Table 1, attached, summarizes the laboratory and client sample identification numbers, sample collection dates, and analytical parameters subject to review.

Validation Overview

This data validation was performed in accordance with the following guidelines, where applicable:

- USEPA Region II Standard Operating Procedure (SOP) #HW-31, "Analysis of Volatile Organic Compounds in Air Contained in Canisters by Method TO-15" (September 2016, Revision 6),
- USEPA Contract Laboratory Program "National Functional Guidelines for Organic Superfund Methods Data Review" (EPA 540- R-20-005, November 2020), and
- published analytical methodologies.

Validation includes review of the analytical data to verify that data are easily traceable and sufficiently complete to permit logical reconstruction by a qualified individual other than the originator.

The following acronyms may be used in the discussion of data-quality issues:

%D	Percent Difference	MB	Method Blank
CCV	Continuing Calibration Verification	MDL	Method Detection Limit
FB	Field Blank	MS	Matrix Spike
FD	Field Duplicate	MSD	Matrix Spike Duplicate
ICAL	Initial Calibration	RF	Response Factor
ICV	Initial Calibration Verification	RL	Reporting Limit
ISTD	Internal Standard	RPD	Relative Percent Difference
LCL	Lower Control Limit	RSD	Relative Standard Deviation
LCS	Laboratory Control Sample	TB	Trip Blank
LCSD	Laboratory Control Sample Duplicate	UCL	Upper Control Limit

Tier 1 data validation is based on completeness and compliance checks of sample-related QC results including: sample receipt documentation; analytical holding times; sample preservation; blank results (method, field, and trip); surrogate recoveries; MS/MSD recoveries and RPDs values; field duplicate RPDs, laboratory duplicate RPDs, and LCS/LCSD recoveries and RPDs. SDG 25A1549 underwent Tier 1 validation review.

As a result of the review process, the following qualifiers may be assigned to the data in accordance with the USEPA guidelines and our best professional judgment:

- **R –** The sample results are unusable. The results are rejected because of serious deficiencies in meeting quality control criteria in accordance with the applicable validation guidelines. The analyte may or may not be present in the sample.
- **J –** The analyte was positively identified but the associated numerical value is approximate.
- **UJ –** The analyte was not detected at or above the method detection limit. The method detection limit may be imprecise because of potential low or indeterminate bias.
- **U –** The analyte was not detected above the method detection limit, or the analyte detection is impacted by blank contamination and qualified as non-detect in accordance with the applicable validation guidelines.

If any validation qualifiers are assigned, these qualifiers should supersede any laboratory-applied qualifiers. Data that is not qualified because of this data validation is considered acceptable on the basis of the items specified for review. Data that is qualified as "R" are considered invalid and are not technically usable for data interpretation. Data that is otherwise qualified because of minor data-quality anomalies are usable, as qualified in Table 2 (attached).

MAJOR DEFICIENCIES:

Major deficiencies include those that grossly impact data quality and necessitate the rejection of results. No major deficiencies were identified.

MINOR DEFICIENCIES:

Minor deficiencies include anomalies that directly impact data quality and necessitate qualification, but do not result in unusable data. The section below describes the minor deficiencies that were identified.

VOCs by EPA TO-15

25A1549

The LCS for batch BA51746 exhibited a percent recovery below the LCL for vinyl acetate (43.2%). The associated results in samples AA01_012825, IA01_012825, IA02_012825, IA03_012825, and IA04_012825 are qualified as UJ because of potential low bias.

OTHER DEFICIENCIES:

Other deficiencies include anomalies that do not directly impact data quality and do not necessitate qualification. The section below describes the other deficiencies that were identified.

VOCs by EPA TO-15

25A1549

The LCS for batch BA51746 exhibited a percent recovery above the UCL for 1,3-dichlorobenzene (132%). The associated results are non-detect. No qualification is necessary.

CONCLUSION:

Based on this evaluation, the laboratory appears to have followed the specified analytical methods except for errors discussed above. If a given fraction is not mentioned above, that means that all specified criteria were met for that parameter. All the data packages met ASP Category B requirements.

All data are considered usable, as qualified, except for the rejected results. In addition, completeness, defined as the percentage of analytical results that are judged to be valid, is 100%.

Signed:



Krzysztof Trafalski
Senior Staff Chemist

Data Usability Summary Report
For 514 Union Street
January 2025 indoor Ambient Air Samples
Table 1: Sample Summary

SDG	Lab Sample ID	Client Sample ID	Sample Date	Validation Level	Analytical Parameters
25A1549	25A1549-01	IA01_012825	1/28/2025	Tier 1	VOCs by EPA TO-15
25A1549	25A1549-02	IA02_012825	1/28/2025	Tier 1	VOCs by EPA TO-15
25A1549	25A1549-03	IA03_012825	1/28/2025	Tier 1	VOCs by EPA TO-15
25A1549	25A1549-04	IA04_012825	1/28/2025	Tier 1	VOCs by EPA TO-15
25A1549	25A1549-05	AA01_012825	1/28/2025	Tier 1	VOCs by EPA TO-15

Data Usability Summary Report
For 514 Union Street
January 2025 indoor Ambient Air Samples
Table 2: Validator-Applied Qualification

SDG	Client Sample ID	Analysis	CAS #	Analyte	Validator Qualifier
25A1549	IA01_012825	TO-15	108-05-4	Vinyl Acetate	UJ
25A1549	IA02_012825	TO-15	108-05-4	Vinyl Acetate	UJ
25A1549	IA03_012825	TO-15	108-05-4	Vinyl Acetate	UJ
25A1549	IA04_012825	TO-15	108-05-4	Vinyl Acetate	UJ
25A1549	AA01_012825	TO-15	108-05-4	Vinyl Acetate	UJ

LANGAN
ENGINEERING & ENVIRONMENTAL SERVICES

Technical Memorandum

1 University Square Drive Princeton, NJ 08540 T: 609.282.8000
Mailing Address: 1 University Square Drive Princeton, NJ 08540

To: Caroline Devin, Langan Senior Staff Engineer

From: Joe Conboy, Langan Project Chemist

Date: March 27, 2025

Re: Data Usability Summary Report
For 514 Union Street
March 2025 Indoor and Ambient Air Samples
Langan Project No.: 170361301

This memorandum presents the findings of an analytical data validation of the data generated from the analysis of air samples collected in March 2025 by Langan Engineering and Environmental Services at the 514 Union Street site. The samples were analyzed by York Analytical Laboratories, Inc. (NYSDOH NELAP registration # 12058) for volatile organic compounds (VOCs) by the methods specified below.

- VOCs by USEPA Method TO-15

Table 1, attached, summarizes the laboratory and client sample identification numbers, sample collection dates, and analytical parameters subject to review.

Validation Overview

This data validation was performed in accordance with the following guidelines, where applicable:

- USEPA Region II Standard Operating Procedure (SOP) #HW-31, "Analysis of Volatile Organic Compounds in Air Contained in Canisters by Method TO-15" (September 2016, Revision 6),
- USEPA Contract Laboratory Program "National Functional Guidelines for Organic Superfund Methods Data Review" (EPA 540- R-20-005, November 2020), and
- published analytical methodologies.

Validation includes review of the analytical data to verify that data are easily traceable and sufficiently complete to permit logical reconstruction by a qualified individual other than the originator.

Tier 1 data validation is based on completeness and compliance checks of sample-related QC results including: sample receipt documentation; analytical holding times; sample preservation; blank results (method, field, and trip); surrogate recoveries; MS/MSD recoveries and RPDs

values; field duplicate RPDs, laboratory duplicate RPDs, and LCS/LCSD recoveries and RPDs. All sample delivery groups underwent Tier 1 validation review.

As a result of the review process, the following qualifiers may be assigned to the data in accordance with the USEPA guidelines and our best professional judgment:

- **R –** The sample results are unusable. The results are rejected because of serious deficiencies in meeting quality control criteria in accordance with the applicable validation guidelines. The analyte may or may not be present in the sample.
- **J –** The analyte was positively identified above the quantitation limit, and the associated numerical value is the approximate concentration of the analyte in the sample.
- **UJ –** The analyte was not detected at or above the quantitation limit. The reported quantitation limit may be imprecise because of potential low or indeterminate bias.
- **U –** The analyte was not detected at or above the quantitation limit, or the analyte detection is impacted by blank contamination and qualified as non-detect in accordance with the applicable validation guidelines.

If any validation qualifiers are assigned, these qualifiers should supersede any laboratory-applied qualifiers. Data that is not qualified as a result of this data validation is considered acceptable on the basis of the items specified for review. Data that is qualified as "R" are considered invalid and are not technically usable for data interpretation. Data that is otherwise qualified because of minor data-quality anomalies are usable, as qualified in Table 2 (attached).

The following acronyms may be used in the discussion of data-quality issues:

%D	Percent Difference	MB	Method Blank
CCV	Continuing Calibration Verification	MDL	Method Detection Limit
FB	Field Blank	MS	Matrix Spike
FD	Field Duplicate	MSD	Matrix Spike Duplicate
ICAL	Initial Calibration	RF	Response Factor
ICV	Initial Calibration Verification	RL	Reporting Limit
ISTD	Internal Standard	RPD	Relative Percent Difference
LCL	Lower Control Limit	RSD	Relative Standard Deviation
LCS	Laboratory Control Sample	TB	Trip Blank
LCSD	Laboratory Control Sample Duplicate	UCL	Upper Control Limit

MAJOR DEFICIENCIES:

Major deficiencies include those that grossly impact data quality and necessitate the rejection of results. No major deficiencies were identified.

MINOR DEFICIENCIES:

Minor deficiencies include anomalies that directly impact data quality and necessitate qualification, but do not result in unusable data. The section below describes the minor deficiencies that were identified.

VOCs by USEPA Method TO-15

25C1275

The MB for batch BC51555 exhibited a detection of isopropanol (0.91 ug/m3). The associated detected results <10x the blank concentration in samples IA01_032025, IA02_032025, IA03_032025, IA04_032025, and AA01_032025 are qualified as J because of potential blank contamination.

The LCS for batch BC51555 exhibited a percent recovery below the LCL for vinyl acetate (56.4%). The associated results in samples IA01_032025, IA02_032025, IA03_032025, IA04_032025, and AA01_032025 are qualified as UJ because of potential low bias.

The individual clean canister certification blank for canister 49577 exhibited a detection of isopropanol (1.1 ug/m3). The associated results in sample IA04_032025 are qualified as J because of potential blank contamination.

The individual clean canister certification blank for canister 51008 exhibited a detection of isopropanol (1.4 ug/m3). The associated results in sample IA02_032025 are qualified as J because of potential blank contamination.

The individual clean canister certification blank for canister 49976 exhibited a detection of isopropanol (1.1 ug/m3). The associated results in sample AA01_032025 are qualified as J because of potential blank contamination.

The individual clean canister certification blank for canister 49998 exhibited a detection of isopropanol (1.2 ug/m3). The associated results in sample IA01_032025 are qualified as J because of potential blank contamination.

The individual clean canister certification blank for canister 34501 exhibited a detection of isopropanol (1.2 ug/m3). The associated results in sample IA03_032025 are qualified as J because of potential blank contamination.

OTHER DEFICIENCIES:

Other deficiencies include anomalies that do not directly impact data quality and do not necessitate qualification. The section below describes the other deficiencies that were identified.

VOCs by USEPA Method TO-15

25C1275

The LCS for batch BC51555 exhibited percent recoveries above the UCL for bromoform (131%) and hexachlorobutadiene (151%). The associated results are non-detect. No qualification is necessary.

CONCLUSION:

On the basis of this evaluation, the laboratory appears to have followed the specified analytical methods with the exception of errors discussed above. If a given fraction is not mentioned above, that means that all specified criteria were met for that parameter. All of the data packages met ASP Category B requirements.

All data are considered usable, as qualified. In addition, completeness, defined as the percentage of analytical results that are judged to be valid, is 100%.

Signed:



Joe Conboy
Project Chemist

Data Usability Summary Report
For 514 Union Street
March 2025 Indoor and Ambient Air Samples
Table 1: Sample Summary

SDG	Lab Sample ID	Client Sample ID	Sample Date	Validation Level	Analytical Parameters
25C1275	25C1275-01	IA01_032025	3/20/2025	Tier 1	USEPA Method TO-15
25C1275	25C1275-02	IA02_032025	3/20/2025	Tier 1	USEPA Method TO-15
25C1275	25C1275-03	IA03_032025	3/20/2025	Tier 1	USEPA Method TO-15
25C1275	25C1275-04	IA04_032025	3/20/2025	Tier 1	USEPA Method TO-15
25C1275	25C1275-05	AA01_032025	3/20/2025	Tier 1	USEPA Method TO-15

Data Usability Summary Report
For 514 Union Street
March 2025 Indoor and Ambient Air Samples
Table 2: Validator-Applied Qualification

SDG	Client Sample ID	Analysis	Total (T) / Dissolved (D)	CAS #	Analyte	Validator Qualifier
25C1275	IA01_032025	TO15	NA	67-63-0	Isopropanol	J
25C1275	IA01_032025	TO15	NA	108-05-4	Vinyl Acetate	UJ
25C1275	IA02_032025	TO15	NA	67-63-0	Isopropanol	J
25C1275	IA02_032025	TO15	NA	108-05-4	Vinyl Acetate	UJ
25C1275	IA03_032025	TO15	NA	67-63-0	Isopropanol	J
25C1275	IA03_032025	TO15	NA	108-05-4	Vinyl Acetate	UJ
25C1275	IA04_032025	TO15	NA	67-63-0	Isopropanol	J
25C1275	IA04_032025	TO15	NA	108-05-4	Vinyl Acetate	UJ
25C1275	AA01_032025	TO15	NA	67-63-0	Isopropanol	J
25C1275	AA01_032025	TO15	NA	108-05-4	Vinyl Acetate	UJ