AC DUTTON GREENWAY CITY SITE

CITY OF POUGHKEEPSIE, NEW YORK

Remedial Action Work Plan

NYSDEC BCP Number: C314123

Prepared for:

DUTCHESS AVENUE RIVER WALK LLC

241 HUDSON STREET

HACKENSACK, NJ 07601

Prepared by:

SESI CONSULTING ENGINEERS, PC

12A MAPLE AVENUE, PINE BROOK, NJ 07058

Ph: (973) 808 - 9050

OCTOBER 2015

CERTIFICATIONS

I, Fuad Dahan, certify that I am currently a NYS registered professional engineer as defined in 6 NYCRR Part 375 and that this Remedial Action Work Plan was prepared in accordance with all applicable statutes and regulations and in substantial conformance with the DER Technical Guidance for Site Investigation and Remediation (DER-10)

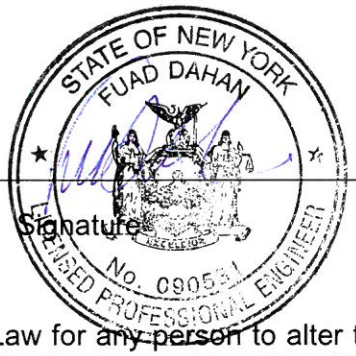

Fuad Dahan 10/29/2015

NYS Professional Engineer # 090531 Date Signature

It is a violation of Article 130 of New York State Education Law for any person to alter this document in any way without the express written verification of adoption by any New York State licensed engineer in accordance with Section 7209(2), Article 130, New York State Education.

Table of Contents

CERTIFICATIONS 2

1.0 INTRODUCTION 1

1.1 Purpose 1

1.2 Site Information 2

1.2.1 Site Location and Description 2

1.2.2 Site History 2

1.2.3 Proposed Future Usage of the Site 2

1.3.1 Extent of Contamination in Soils 3

1.3.2 Extent of Contamination in Sediments 3

1.3.3 Extent of Contamination in Groundwater 4

2.0 GENERAL REMEDIAL CONSTRUCTION INFORMATION 4

2.1.1 Remedial Engineer 5

2.1.2 Work Hours 5

2.1.3 Site Security 5

2.1.4 Traffic Control 5

2.1.5 Contingency Plan 5

2.1.6 Worker Training and Monitoring 6

2.1.7 Agency Approvals 6

2.1.8 NYSDEC BCP Signage 6

2.1.9 Pre-Construction Meeting with NYSDEC 6

2.1.10 Emergency Contact Information 6

2.2 Site Preparation 7

2.2.1 Mobilization 7

2.2.2 Storm-Water Pollution Prevention Plan (SWPPP) 7

2.2.3 Stabilized Construction Entrance 7

2.2.4 Utility Marker and Easements Layout 8

2.2.5 Sheeting and Shoring 8

2.2.6 Equipment and Material Staging 8

2.2.7 Decontamination Area 8

2.2.8 Site Fencing 8
2.2.9 Demobilization 8
2.3 Reporting 9
3.0 OVERVIEW OF PROPOSED REMEDIATION SERVICES 10
3.1 Cover System Installation 10
3.1.1 Recordkeeping 10
3.2 Rip-Rap Construction 10
3.3 Soil Importation 10
3.3.1 General 10
3.3.2 Sampling 11
3.3.3 Soil Stockpiling 12
3.3.4 Air Monitoring 12
3.3.5 Hauling 12
3.3.6 Recordkeeping 13
3.4 Institutional and Engineering Controls 13
3.4.1 Environmental Easement 13
3.4.2 Site Management Plan 13
3.4.3 Engineering Controls 15
3.5 Documentation of Site Remediation and/or Closure 15
4.0 GOVERNING DOCUMENTS 16
4.1 Site Specific Health and Safety Plan 16
4.2 Community Air Monitoring Plan 16
4.3 Quality Assurance Project Plan 16
4.4 Contingency Plan 16
4.5 Storm Water Pollution Prevention Plan 16

1.0 INTRODUCTION

1.1 Purpose

SESI Consulting Engineers, PC (SESI) has prepared this Remedial Action Work Plan (RAWP) for the proposed environmental response actions at AC Dutton Greenway City Site (hereafter referred to as the "Site"). The Site is located along the Hudson River, west of the "A.C. Dutton Lumber Yard" property, which is located at 1 Dutchess Avenue, City of Poughkeepsie, New York. The RAWP is prepared on behalf of Dutchess Avenue Riverwalk LLC (Volunteer).

This proposed environmental response action addresses known environmental conditions at the Site documented in the Remedial Investigation Report (RIR), prepared by Fuss and O'Neill of New York, P.C., dated August 2007.

The Site has been admitted into the Brownfield Cleanup Program (BCP) as Site number C314123. The Volunteer's relationship to the subject Brownfield site is that of a future purchaser, which is affiliated with the upland owner of the adjacent A.C Dutton Lumber BCP site C#314081 (the "AC Dutton Site"); namely, The O'Neill Group-Dutton LLC ("O'Neill-Dutton"). The Volunteer had no role in the contamination of the Site.

The A.C. Dutton Greenway City Site (the "Site") subject to this RAWP is owned by the State Office of General Services, since the land was created by a historic site owner who apparently overfilled the river beyond the letters patent line. The Site was originally part of the Adjacent BCP Site owned by O'Neill-Dutton and was fully investigated pursuant to a BCP Remediation Investigation, until it was discovered about half way through the BCP process that the Site was not owned by O'Neill-Dutton as a result of detailed survey work. Since that time, pursuant to New York Public Lands Law § 75(7)(a) and New York Codes Rules and Regulations Part 270-4, OGS has agreed to sell the Site to O'Neill-Dutton, as the upland adjacent property owner, and has provided O'Neill-Dutton with an Interim Permit for Use of State Owned Property (Permit Number LUW01369 2015) to perform the investigation and remediation work required by the Brownfield Cleanup Program.

All work will be performed in general conformance with regulations specified in 6 NYCRR Part 375 (Environmental Remediation Programs) and applicable NYSDEC guidance documents (Division of Environmental Remediation-10, Technical Guidance for Site Investigation and Remediation-DER-10 and the Draft Brownfield Cleanup Program Guide).

1.2 Site Information

1.2.1 Site Location and Description

The 2.218 acre Site is a located on the Hudson River in the City of Poughkeepsie as shown on Figure 1.1-Site Location Plan. The Site is adjacent to the larger AC Dutton Lumber BCP development site (totaling 11.84 acres) located at 1 Dutchess Avenue, Poughkeepsie, New York.

1.2.2 Site History

The Site has been in industrial use from the mid-1800s to 1995. Prior to 1913, the Site uses included an iron works and a glass works plant. There were several kilns associated with the glass works. Historical and empirical data suggest that solidified kiln ash, periodically cleaned out of the kilns, was used as fill material at the Site. Additionally, when the glass works building and loading dock were dismantled, this demolition debris was also utilized as fill. Between 1966 and 1995, the A.C. Dutton Lumber Corporation operated a wholesale lumber company on the Site and pressure-treated lumber using chromated copper arsenate ("CCA"). The former owner, A.C. Dutton Corporation, was owned in part or in subsidiary by Miron Building Products Co., Inc. Raw lumber material was brought to the AC Dutton site by truck, boat, and rail. Lumber was processed in either of the two on-site treatment plants, known as the northern and southern treatment plants. The lumber stock was then temporarily stored in a sheltered drip pad area and allowed to partially drip dry, and then was transferred outside to large, open storage yards for additional drying. Exterior drying of the lumber treated with the CCA caused much of the on-Site contamination. The Site contaminants of concern are arsenic, copper and chromium (breakdown products from copper chromated arsenate, or CCA).

1.2.3 Proposed Future Usage of the Site

The Site will be developed into a greenway trail/ park open space, and then transferred to the City of Poughkeepsie to be used as a public greenway and park. A small portion of the Site, approximately 0.268 acres, will be transferred to the O'Neil Group Dutton to be used for roadway and parking in the adjacent development. With the addition of this Site to the growing Hudson River trailway system, the City of Poughkeepsie will be a significant step closer towards realizing its goal of having a publically accessible walk from its southernmost and to its northernmost points. The park will be completely accessible from Dutchess Avenue and will expand the area encompassed by Walkway Over the Hudson and other attractions such as the Children's Museum.

1.3 Site Environmental Conditions

This section provides a summary of known Site Environmental Conditions. The findings of all previous environmental investigations performed to date are detailed in the Fuss and O'Neill RIR (August 2007), and Ecosystems Solutions Inc. (ESI's) Supplemental Investigation Report

(SIR) (September 2008), which was performed according to the NYSDEC approved Supplemental Remedial Investigation Work Plan (SRIWP) (March 2008).

Fuss & O'Neill prepared the RIR August 2007) for O'Neill-Dutton for submittal to NYSDEC in accordance with the requirements of the BCP for the adjacent BCP Site - C#314081, which in 2005 included the Site. Therefore, a complete and approved RIR has been completed for the Adjacent BCP Site - #C314081 and this Site.

1.3.1 Extent of Contamination in Soils

Six soil samples were collected from five locations at the Site during the RIR work as follows:

- Z12: ACD-SS-Z12 at depth 0-0.5 feet bgs (17.0 ppm As)
- S10: ACD-SS-S10 at depth 0-1.0 feet bgs (did not exceed)
- L9: ACD-SS-L9 at depths 0-0. 5 (56.8 ppm As) and 0.5-2.5 feet bgs (did not exceed)
- Y12: ACD-SS-Y12 at depth 0.5-4.0 feet bgs (31.4 ppm As)
- T10: ACD-SS-T10 at depth 0.5-3.0 feet bgs (36.1 ppm As)

The sample locations are presented on Figure 4 of the RIR and the sample results for arsenic are presented in Figure 5.A and 5.B and reported in Table 1 of the RIR. Figures 4, 5A, 5B and 6 of the RIR are provided as Appendix A of this report. The samples collected from Z12 (0-0.5), L9 (0.0-0.5), Y12 (0.5-4.0) and T10 (0.5-3) exceeded the restricted residential arsenic soil clean-up objective (SCO), which is 16 mg/kg (ppm). However, a site specific clean-up objective was raised from 32 mg/kg to 300 mg/kg on the AC Dutton Site per the NYSDEC letter which is included as Appendix B.

The Site is not a petroleum AOC as per Figure 6 of the RIR (Appendix A), which presents the extent of the petroleum AOCs at the AC Dutton Site.

A small brick office building was demolished from the Site in June 2010 and an underground storage tank was removed from the Site in October 2011 as part of the Former AC Dutton Site remedial action.

1.3.2 Extent of Contamination in Sediments

Three sediments samples (SD-12, SD-13, and SD-14) were collected from the Hudson River just off the Site banks during the RIR investigation as shown in Figure 4 of the RIR. Arsenic levels in all three samples were above the Sediment SCGs Lowest Effect Level (6 ppm) but below the Sediment SCGs Highest Effect Level (33 ppm). In SED-13 and -14 some PAH's (Benzo(a)pyrene and Benzo(a)Anthracene) exceeded the Benthic Aquatic Life Acute and Chronic Toxicity Levels.

1.3.3 Extent of Contamination in Groundwater

The Site groundwater is being addressed under the AC Dutton Site Management Plan (SMP) prepared by SESI Consulting Engineers PC. The SMP includes the monitoring for metals of four wells installed in the AC Dutton Site.

1.4 Exposure Assessment

Supplementary Investigation Report, prepared by ESI (September 2008) included an exposure assessment.

The primary contaminants present on the Site are metals adsorbed to the Site soils. There is currently the potential for trespassers at the Site to be exposed to contaminants through dermal contact with contaminated dust, equipment, or floor surfaces or through inhalation of contaminated dust and surface soil particles. Depending on future land use conditions at the Site, future residents and construction workers could be exposed to contamination in surface soil, if left exposed, through dermal contact or inhalation of soil particles. Dermal contact or inhalation of subsurface soil particles could occur during excavation work conducted at the Site. The implementation of the SMP and its attached Health and Safety Plan (HASP) and Community Air-Monitoring Plan CAMP) would mitigate possible impacts to any potential receptor populations.

2.0 GENERAL REMEDIAL CONSTRUCTION INFORMATION

2.1 Project Organization

Dutchess Avenue River Walk LLC, the Volunteer, will hire contractor(s) that have adequate qualifications to perform the remediation, which will be implemented in accordance with the schedule shown in Table 2.1 below. The general contractor (GC) will be responsible for the implementation of all construction activities and will consult with the Remedial Engineer to ensure compliance with all requirements of this RAWP.

Table 2.1 Schedule of the Remediation Activities

Date	Task #	Description
November 30, 2015 (tentative) Pending the approval of the RAWP and other required permits	**1**	Installation of the Rip-Rap and the shoreline stabilization
TBD Upon the approval of the RAWP	**2**	Start Installation of the capping system
Upon completion of Task # 2	**3**	Site Management Plan, Environmental Easement development and execution, and Final Engineering Report

2.1.1 Remedial Engineer

The Remedial Engineer for this project will be Fuad Dahan, PE (NY License # 090531) from SESI. The Remedial Engineer will work with the GC to implement the RAWP for the Site. The Remedial Engineer will certify in the Final Engineering Report (FER) that the remedial activities were observed by qualified environmental professionals under his supervision and that the remediation requirements set forth are achieved in conformance with this Plan.

2.1.2 Work Hours

The hours for operation of remedial construction will conform to the Town and/or City of Poughkeepsie Building Department construction code requirements or according to specific variances issued by those agencies. NYSDEC will be notified by the Volunteer of any variances issued by either of the Building Departments. NYSDEC reserves the right to deny alternate remedial construction hours.

2.1.3 Site Security

Currently (June 2015), fencing exists along the northern, eastern and southern boundaries of the AC Dutton Site, which will preclude access to the Site. During all remedial activities and at the conclusion of all work, the Site will be fully secured by fencing. The site has one access gate (at Dutchess Avenue), which will be closed and locked during off-work hours.

2.1.4 Traffic Control

Traffic control will be provided by the General Contractor (GC) during equipment/truck entrance and egress from the Site. Trucks will follow the approved truck route shown on Figure 2.1. It is noted that the entrance to the site is at the terminus of Dutchess Avenue and therefore truck ingress and egress is not considered to be a significant safety issue.

2.1.5 Contingency Plan

It is not anticipated that unknown conditions will be encountered on the Site because no excavation or intrusive work will be performed during the planned remedial activities. Therefore, no contingencies are expected and a contingency plan is not required.

2.1.6 Worker Training and Monitoring

The Volunteer is responsible for insuring that all Site contractors provide their workers with applicable training (i.e. HAZWOPER, site safety training, and medical monitoring, as necessary).

2.1.7 Agency Approvals

Approvals identified herein refer solely to approvals that must be secured prior to the implementation of remedial efforts. It is accepted that other approvals may be required prior to Site development. This is an anticipated list of involved agencies:

- New York State Department of Environmental Conservation approval of this RAWP.

2.1.8 NYSDEC BCP Signage

A project sign was erected at the main entrance of the Site for the Former AC Dutton Site #C314081, which was consistent with the requirements of the NYSDEC. However, the sign has been removed at request of the NYSDEC in May 2014 due to vandalism. A new sign for the Site will not be put up.

2.1.9 Pre-Construction Meeting with NYSDEC

A pre-construction meeting among NYSDEC, the Volunteer, the Remedial Engineer, and the designated General Contractor will take place prior to the start of major construction activities.

2.1.10 Emergency Contact Information

An emergency contact sheet with names and telephone numbers that will define the specific project contacts for use by NYSDEC and NYSDOH in the case of a day or night emergency is provided below.

Table 2.2: Emergency Contact Information

Emergency Contact	Phone Number
O'Neill-Dutton LLC Lou Kaufman, Representing the Owner	(201) 488-4455
Emergency Contact Number for O'Neill-Dutton	(201) 488-4455
SESI Consulting Engineers Fuad Dahan, Project Manager	(973) 808-9050
NYSDEC Jamie Verrigni, Project Manager	(518) 402-9662
Site Superintendant	
Spills Hotline	(800) 457-7362
US Coast Guard Incident Notification	(800) 424-8802
Site Health and Safety Officer Site Personnel	TBD
St Francis Hospital 41 North Road	(845) 485-5087
Police Department	(845) 451-4000 or 911
Fire Department	(845) 451-4081 or 911
City Hall	(845) 451-4200
City Mayor	(845) 451-4073
Water and Sewer Operations	(845) 451-4111

2.2 Site Preparation

2.2.1 Mobilization

Site mobilization will be conducted in a manner such that erosion and sedimentation control, utility mark-out, and other site preparation tasks are fully instituted prior to the start of construction.

2.2.2 Storm-Water Pollution Prevention Plan (SWPPP)

The erosion and sediment controls will be performed in conformance with requirements presented in the New York State Guidelines for Urban Erosion and Sediment Control and the Site-specific Storm Water Pollution Prevention Plan (SWPP), which is included in Appendix C. The erosion and sediment control measures will be installed before start of construction and inspected weekly or after every significant storm event.

2.2.3 Stabilized Construction Entrance

A stabilized construction entrance was included as part of the erosion and sedimentation control for the AC Dutton Site and it will be maintained for the remedial activities planned for this Site. This stabilized construction entrance will be in continuity with the stone-based egress path so that trucks do not become re-contaminated prior to departure from the Site.

2.2.4 Utility Marker and Easements Layout

The Volunteer and its GC are solely responsible for the identification of utilities that might be affected by work under this RAWP and implementation of all required, appropriate, or necessary health and safety measures during performance of work. There are no active utilities at the site. The Volunteer and its contractors must obtain any local, State or Federal permits or approvals pertinent to performance of work under this RAWP. Approval of this RAWP by NYSDEC does not constitute satisfaction of these requirements.

2.2.5 Sheeting and Shoring

No excavation or intrusive work is planned during the remedial activities and therefore sheeting or shoring will not be required during the implementation of the RAWP.

2.2.6 Equipment and Material Staging

Equipment and materials staging areas will be provided on the Site.

2.2.7 Decontamination Area

A truck wheel cleaning pad is installed at the entrance of the Site to provide a medium to remove any attached soils from the truck tire.

2.2.8 Site Fencing

Fencing exists along the northern, southern, and eastern boundaries of the adjacent AC Dutton Site, which precludes the entry to the Site. The Site is bounded by the Hudson River to the west.

2.2.9 Demobilization

Demobilization will address (as applicable):

- Restoration of areas that may have been disturbed to accommodate support areas (e.g., staging areas, decontamination areas, storage areas, temporary water management area[s], and access areas);

- Removal of temporary access areas (whether on-site or off-site) and restoration of disturbed access areas to pre-remediation conditions;

- Removal of sediment and erosion control measures and disposal of materials in accordance with applicable rules and regulations;
- Equipment decontamination;
- General refuse disposal.

2.3 Reporting

Reports will be submitted by SESI to the NYSDEC and NYSDOH Project Managers by the 10th day of each month, commencing with the month subsequent to the approval of this RAWP and the start of the field work, and ending with the Termination Date. The monthly reports will include:

- An update of progress made during the reporting period and actions anticipated for the next reporting period;
- All approved activity modifications;
- Locations of work and quantities of material imported to the Site;
- References to the Remediation Map for Site activities;
- A summary of any and all complaints with relevant details (names, phone numbers);
- A summary of Community Air Monitoring Plan (CAMP) findings including exceedances and response actions; and,
- An explanation of notable Site conditions.

Monthly reports are not intended to be the mode of communication for notification to the NYSDEC of emergencies (accident, spill), requests for changes to the RAWP, or other sensitive or time critical information. Emergency conditions, substantive changes to the RAWP, and exceedances of CAMP guidance levels will be addressed directly to the NYSDEC Project Manager via direct written (e.g., e-mail) or verbal (phone call) communication.

3.0 OVERVIEW OF PROPOSED REMEDIATION SERVICES

The Remediation services include the installation of a cover system over the entire Park area and rip-rap over the river banks for slope protection.

3.1 Cover System Installation

Exposure to the remaining contamination in the soil/fill at the Site will be prevented by a soil cover system placed over the site. This soil cover system is comprised from top to bottom of the following:

- 6-inch layer of soil that supports vegetation,
- Minimum 18-inch or greater to planned grade layer of NYSDEC-approved fill that meets the restricted residential Soil Clean-up Objective (SCO), and
- A demarcation layer consisting of orange geotextile or snow fence.

The soil cover area and the cross section specifications are presented in Figure 3.1. The cover system will include an asphalt trail and small concrete slabs when the Site is fully developed into a Greenway Trail. Non-vegetated areas (Trails, bench areas etc.) will be covered by a newly installed paving system or concrete at least 6" thick.

A demarcation layer consisting of an easily identifiable, non-biodegradable layer such as high visible porous plastic mesh will first be placed on all areas that are targeted for the placement of the barrier layer. After the demarcation layer has been appropriately placed, the approved fill will be placed and compacted in lifts not exceeding 12 inches.

3.1.1 Recordkeeping

Manifest forms required by the appropriate agencies for verifying the materials and quantities in unit volume of weight of each load will be retained for inclusion in the Final Engineering Report.

3.2 Rip-Rap Construction

Rip-rap will be constructed along the Hudson River bank on the western side of the Site. The rip-rap will provide long term erosion control from the river flow. The rip rap will also prevent the sediment carried with the Site sheet flow from settling in the river bed. The rip rap design (by Maser Consulting) and the supporting materials are included in Appendix D. The rip rap construction will be such that the resulting slope will be as shallow as possible and vegetation will be planted along the shoreline from the mean high water or spring high tide up to the top of the bank.

3.3 Soil Importation

3.3.1 General

Clean fill and rocks may be imported to the Site to construct the cover system and rip-rap.

The soils and rocks proposed for importation will be subject to sampling and will meet the NYSDEC Division of Environmental Remediation's criteria for soil covers and/or backfill.

The relevant fill material documentation along with the "Request to Import/Reuse Fill" form will be submitted for NYSDEC approval prior to importation on Site.

The total quantity of soil required for the capping and grading the Site is approximately 15,000 CY. This quantity of clean fill has already been approved by the NYSDEC and imported to the AC Dutton Site (#C314081) under the SMP for surcharging the building pads. The approved clean fill material that exists on Site includes rock and soil that is supportive of vegetation.

The approved material under the SMP included the following sources:

- 20,000 CY of material imported from Marist College. This material is supportive of vegetation.

- 10,000-15,000 CY of rock imported from 99 Parker Avenue City of Poughkeepsie.

The "Request to Import/Reuse Fill or Soil" form and the email approval from the NYSDEC for each source are included in Appendix H.

The rock needed for the rip-rap construction is approximately 700 CY. Part of the required quantity will be supplied from the rocks that resulted from the rock excavation on the eastern side of the Site. This rock is stockpiled at the AC Dutton Site.

All operations associated with the handling, loading, transportation, and importation of clean fill will be performed in compliance with Federal, State, and local regulations. All work will be performed consistent with the Quality Assurance Plan (Appendix G). The Environmental Engineer will perform soil sampling and will communicate with the NYSDEC to obtain approval for importation of the sampled soils.

3.3.2 Sampling

Methodology

Soils from each source proposed for importation will be properly characterized in the field and the findings recorded in logbooks. Material selected for sampling will be obtained in a manner consistent with NYSDEC sample collection protocols. Decontaminated stainless steel trowels and dedicated gloves will be used at each sample location to place the material into laboratory- supplied glassware. Prior to and after the collection of each material sample, the sample collection instrument will be properly decontaminated to avoid cross-contamination between samples.

Analysis and Frequency

Samples will be analyzed for the full Target Compound List/Target Analyte List (TCL/TAL) plus top 10 TICs for VOCs and top 20 TICs for SVOCs:

- Target Compound List for Volatile Compounds (plus top 10 TICs)
- Target Compound List for Semi-volatile Compounds (plus top 20 TICs)
- Target Compound List for Pesticides/Aroclors
- Target Analyte List for Metals and Cyanide

The following Sampling frequency will be adhered to:

Volume (cubic yards)	Sampling and Analysis Requirements	
	VOCs	TCL/TAL
First 1,000	7 grab samples	2 composite samples
Next 4,000	1 grab per 1,000 cubic yards	1 composite per 1,000 cubic yards
Thereafter	1 grab per 5,000 cubic yards	1 composite per 5,000 cubic yards

All sample containers will be placed in a cooler and will be continuously maintained at cold temperatures prior to transport to a New York State Department of Health-certified laboratory for chemical analyses. Appropriate chain of custody procedures will be followed.

The clean soil for use in back filling and/or creating the soil cover must meet the lower of the Soil Cleanup Objectives (SCOs) for Protection of Public Health, "Restricted Residential" Use, as specified in 6 NYCRR Part 375, Table 375-6.8(b) and the SCOs for the protection of groundwater, as specified in 6 NYCRR Part 375-6.7(d).

3.3.3 Soil Stockpiling

Stockpiles will be secured with top covers in locations indicated by the GC to ensure minimum disruption of Site activities. Active monitoring of the stockpiled soil to ensure proper coverage is the responsibility of the GC. Monitoring shall include a visual inspection of the pile no less frequent than once every five calendar days and a visual inspection of the pile within 24 hours of a significant storm event.

3.3.4 Air Monitoring

Ambient air monitoring will be performed at the Site by the GC per the Community Air Monitoring Plan provided in Appendix F. The CAMP monitoring will be reported to the environmental engineer.

3.3.5 Hauling

The GC shall not import soil from any source/ facility other than the source approved by the Volunteer and the NYSDEC. All transporters must have a current license to haul the clean fill.

The GC shall be held responsible for any and all actions necessary to remedy situations involving material spilled in transit or mud and dust tracked off-site. This cleanup shall be accomplished at the Contractor's expense.

The GC shall only use the transporter identified in his bid to perform the work. Any use of substitute or additional transporters must have previous written approval from the Volunteer and if substituted must not increase the Volunteer's cost.

The GC will ensure that trucks approaching and leaving the Site use only the approved truck route as shown in Figure 2.1. The Contractor will further ensure that no truck (empty or loaded) attempts to cross the Hoffman Street Bridge. This bridge has a posted weight limit of 10 tons and no vehicle exceeding that weight is permitted to use the bridge.

The Contractor shall not combine materials from other projects with materials to be imported to the Site.

3.3.6 Recordkeeping

Manifest forms required by the appropriate agencies for verifying the materials and quantities of each load in unit of volumes or weight will be retained for inclusion in the Final Engineering Report.

3.4 Institutional and Engineering Controls

3.4.1 Environmental Easement

An institutional control in the form of an environmental easement will be imposed on the Site that will:

a. Limit the use and development of the property to restricted residential use, which will also permit commercial, industrial uses, or public access trail with recreational uses;

b. Require compliance with the approved SMP;

c. Restrict the use of groundwater and/or surface water as a source of potable or process water, without necessary water quality treatment as determined by Dutchess County Department of Health; and,

d. Require property owner to submit to the NYSDEC a periodic certification of institutional and engineering controls. Per 6 NYCRR Part 375-1.9(f) and (g), the “certificate of completion may be transferred to successors and assigns of the remedial party or parties named in the certificate” and “any party to whom a certificate of completion is transferred shall be responsible for the operation and maintenance of any required engineering controls and compliance with all required in accordance with the approved site management plan and environmental easement.” As such, the party that holds the certificate of completion will be responsible for site management and periodic certifications.

3.4.2 Site Management Plan

Subsequent to the completion of remedial activities, a Site Management Plan (SMP) will be developed for the Site which will include the following institutional and engineering controls:

a. Management of the final cover system to restrict excavation below the soil cover’s demarcation layer, pavement, or buildings. Excavated soil will be tested, properly handled to

protect the health and safety of workers and the nearby community, and will be properly managed in a manner acceptable by the NYSDEC;

b. Identification of any use restrictions on the Site;

c. Continued evaluation of the potential for vapor intrusion for any buildings developed on the Site, including the provision for mitigation of impacts identified;

d. The property owner will provide a periodic certification of institutional and engineering controls, prepared and submitted by a professional engineer or such other expert acceptable to the Department, until the Department notifies the property owner that this certification is no longer needed. This submittal will:

   i. Contain certification that the institutional controls and engineering controls put in place are still in place and are either unchanged from previous certification or are compliant with Department-approved modifications;

   ii. Allow the Department access to the Site; and,

   iii. State that nothing has occurred that will impair the ability of the control to protect public health or the environment, or constitute a violation or failure to comply with the Site Management Plan unless otherwise approved by the Department.

3.4.3 Engineering Controls

3.4.3.1 Barrier Layer

The Site will be overlain with a cover system that will consist of a minimum thickness of two feet of approved clean fill as described in Sections 3.1 and 3.3 of this document. The cover system may consist of pavement (consistent with thicknesses specified in DER-10) in the proposed trails.

3.4.3.2 Rip-Rap

The Site will contain a rip rap that will prevent the erosion of the river banks and erosion from the site into the river.

3.5 Documentation of Site Remediation and/or Closure

A Final Engineering Report (FER) will be prepared at the completion of all services specified in the RAWP. The FER will include results of laboratory analyses generated during activities described in the RAWP, transport/disposal manifests of the imported soils and rock, proof (photographs) and reports of the rip rap installation, and maps illustrating the cover system and the rip rap installations. The FER will include "as-built" drawings stamped and signed by a professional engineer showing the surveyed location and final elevations of the cover system and rip rap construction. Also, the FER will be signed, certified and stamped by a New York licensed PE. The certification will mention that the RAWP have been properly implemented and will include the following certification language:

I _____certify that I am currently a NYS registered professional engineer, I had primary direct responsibility for the implementation of the subject construction program, and I certify that the Remedial Work Plan was implemented and that all construction activities were completed in substantial conformance with the DER-approved Remedial Work Plan.

I certify that all use restrictions, institutional controls, engineering controls and/or any operation and maintenance requirements applicable to the site are contained in an environmental easement created and recorded pursuant to ECL 71-3605 and that any affected local governments, as defined in ECL 71-3603, have been notified that such easement has been recorded.

I certify that a Site Management Plan has been submitted for the continual and proper operation, maintenance, and monitoring of any engineering controls employed at the site including the proper maintenance of any remaining monitoring wells, and that such plan has been approved by DER.

4.0 GOVERNING DOCUMENTS

All remedial work performed under this RAWP will be in full compliance with governmental requirements, including Site and worker safety requirements mandated by Federal OSHA and with the governing documents described in this section.

4.1 Site Specific Health and Safety Plan

The Site Specific Health and Safety Plan (HASP) incorporating a Community Health and Safety Plan and requirements defined in this RAWP pertain to all the remedial activities at the Site until the issuance of a Certificate of Completion. A copy of the HASP is provided as Appendix E.

The HASP will be reviewed with Site personnel and appropriate sub-contractors prior to the initiation of fieldwork.

4.2 Community Air Monitoring Plan

The NYSDOH Generic Community Air Monitoring Plan (CAMP) (Appendix F) will be initiated during all fill placement and rip rap construction activities. The implementation of this CAMP will document the presence or absence of dust in the air surrounding the work zone, which may migrate off-site due to fieldwork activities. This CAMP provides minimum requirements for implementing more stringent dust and emission controls based on air quality data. VOC monitoring will not be performed because no VOC is expected to be present in the imported fill or rock. Dust suppression activities will be conducted during construction activities including misting, reduction in soil movement, or cessation of activities.

4.3 Quality Assurance Project Plan

A Quality Assurance Project Plan (QAPP), detailing procedures necessary to generate data of sufficient quality and quantity has been provided as Appendix G of this report.

4.4 Contingency Plan

It is unlikely that un-anticipated material or conditions will be found during the placement of the cap or the rip-rap because these activities will not involve excavation or intrusive work. These activities will involve the import of approved clean fill or rock and placing it on Site. Therefore no contingency plan is prepared for this RAWP.

4.5 Storm Water Pollution Prevention Plan

A Storm Water Pollution Prevention Plan (SWPP) has been prepared by Maser Consulting and is included as Appendix C. Preventative measures will be taken to protect the Site and adjacent properties from soil erosion and sedimentation during the remedial activities. The ESCP includes

a location map including the proximity of the Site to the Hudson River, roads, etc; a grading plan including finished elevations; and erosion prevention and sediment control measures including the location and type of all erosion and sediment controls (i.e., silt fence, stabilized construction entrance, etc.) and sequencing of the controls.

FIGURES

FIGURE 1.1

PROPERTY LOCATION MAP
DUTCHESS AVE. RIVER WALK SOUTH
1 DUTCHESS AVENUE AND 2 HOFFMAN STREET
POUGHKEEPSIE, NEW YORK

SITE PLAN

SESI
CONSULTING
ENGINEERS, PC
12A MAPLE AVE. PINE BROOK, N.J. 07058 PH: 973-808-9050

SOILS / FOUNDATIONS
SITE DESIGN
ENVIRONMENTAL

DRAWN BY:	YY
CHECKED BY:	FD
SCALE:	N.T.S.
DATE:	10/6/15
JOB NO.:	9046

N:\ACAD\9046\9046- FIG -1.1.dwg, Layout1, 10/6/2015 2:43:52 PM,
1:1

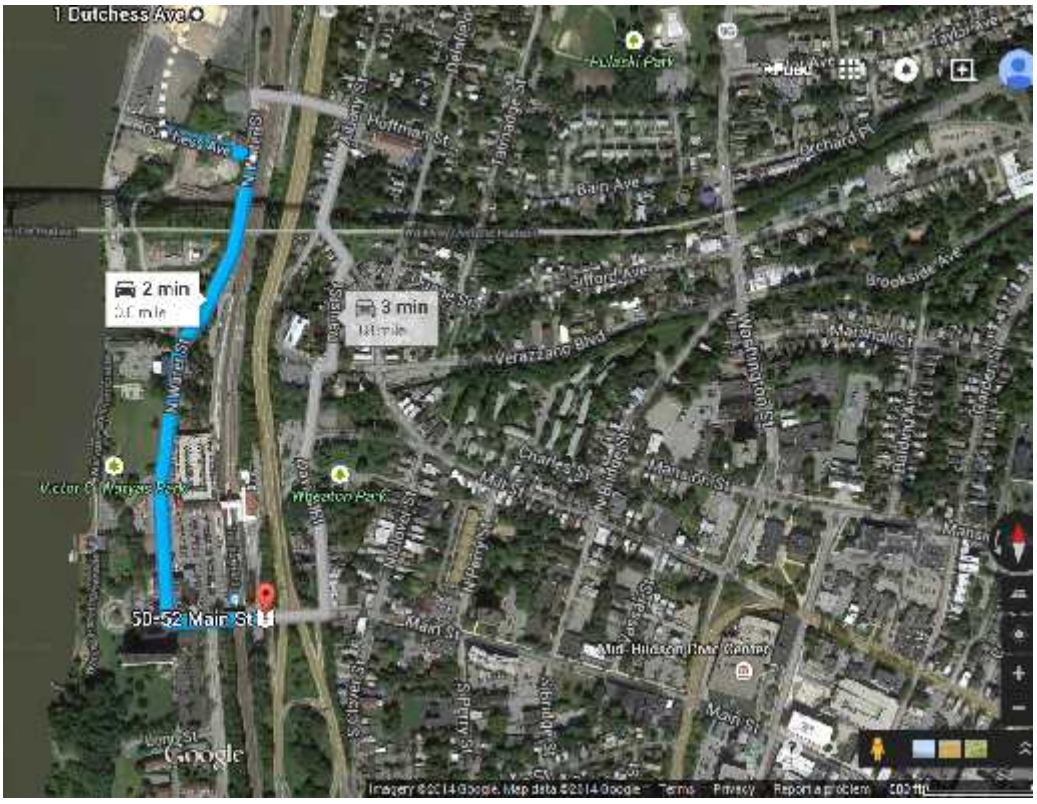

Figure 2.1 Truck Route

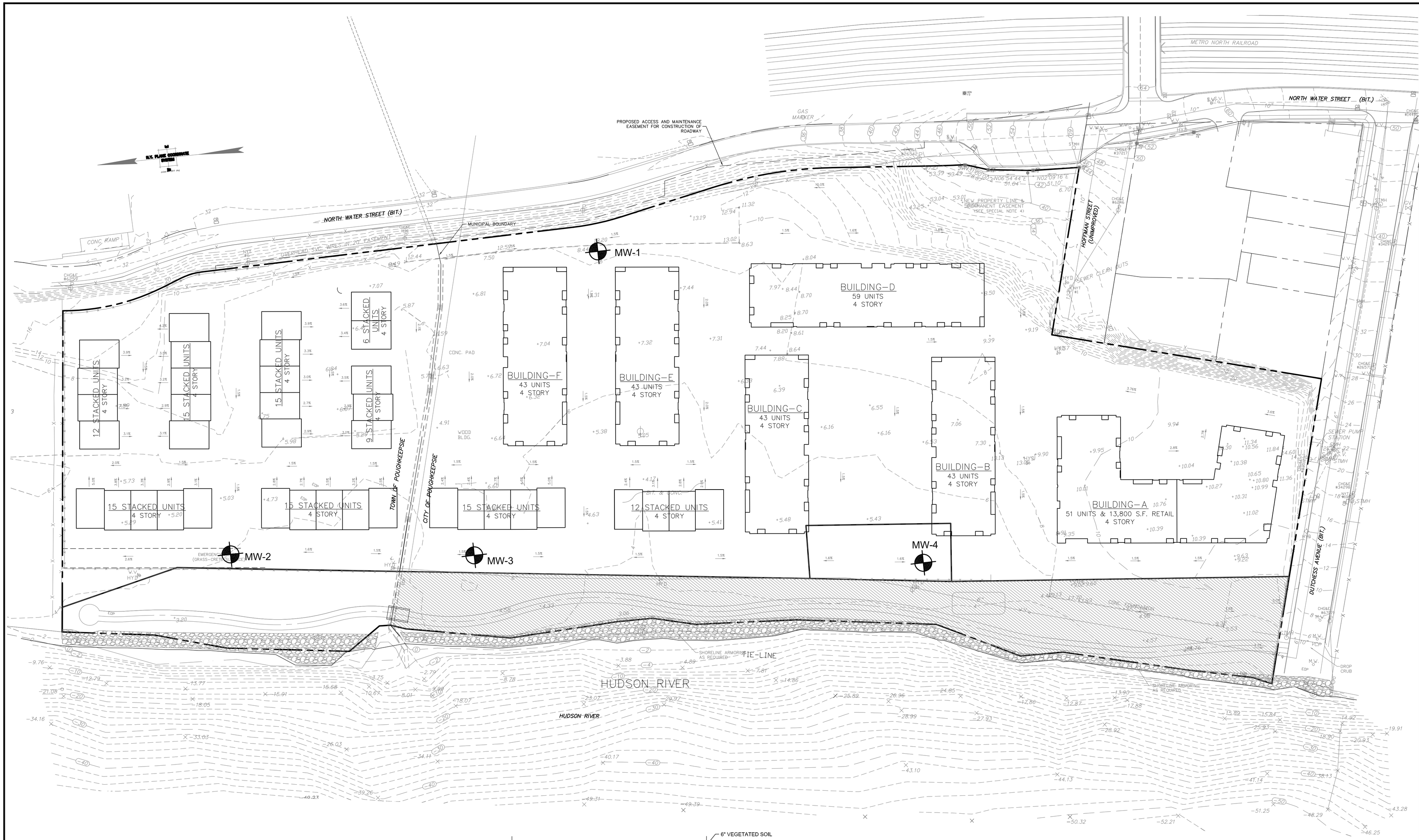

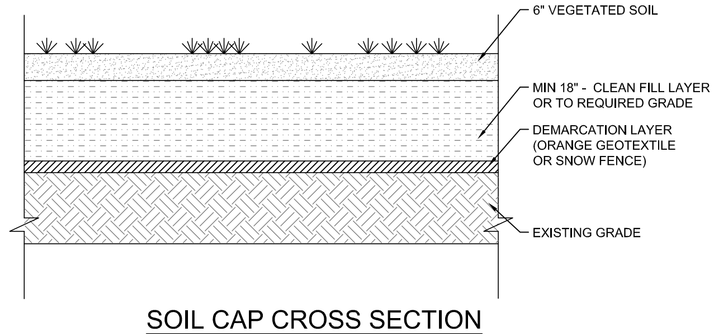

SOIL CAP CROSS SECTION
(TYPICAL LANDSCAPED AREAS)

LEGEND

PROPERTY LINE

MW-4 LOCATION OF MONITORING WELL

COVER SYSTEM AREA

REFERENCE
1. SITE INFORMATION ARE TAKEN FROM "CONCEPT PLAN FOR THE O'NELL GROUP" PREPARED BY MASER CONSULTING P.A. DATED3/20/13.

© SESI CONSULTING ENGINEERS, PC 2014
This drawing and all information contained hereon is proprietary information of SESI CONSULTING ENGINEERS, PC and may not be copied or reproduced, either in whole or in part, by any method, without written permission of SESI CONSULTING ENGINEERS, PC.

rev	date	description	by

dwg by: yy
chk by: FD
scale: N.T.S.
date: 12/19/14

SESI
SOILS / FOUNDATIONS
SITE DESIGN
ENVIRONMENTAL
CONSULTING ENGINEERS, PC
12A MAPLE AVE, PINE BROOK, N.J. 07058 PH: 973-808-9050

project: DUTCHESS AVE. RIVER WALK LLC
CITY OF POUGHKEEPSIE
DUTCHESS COUNTY, NY

drawing title: SOIL CAP PLAN

job no. 8604
drawing no. FIG-3.1

N:\ACAD\8604\8604 TEC.dwg, 6/5/2015 9:56:54 AM

APPENDIX A

CONTAMINANT EXTENT FIGURES

FROM RIR

File Path: F:\P2004\07\64\A1\NDWG from POK\040764A1NSTP002.dwg, Layout: FIG. 4 RI SUMMARY Thu, Aug 16, 2007 - 11:41 AM User: LGwiazdowski

CTB:

LMAN:

MS VIEW:

UCS: WORLD

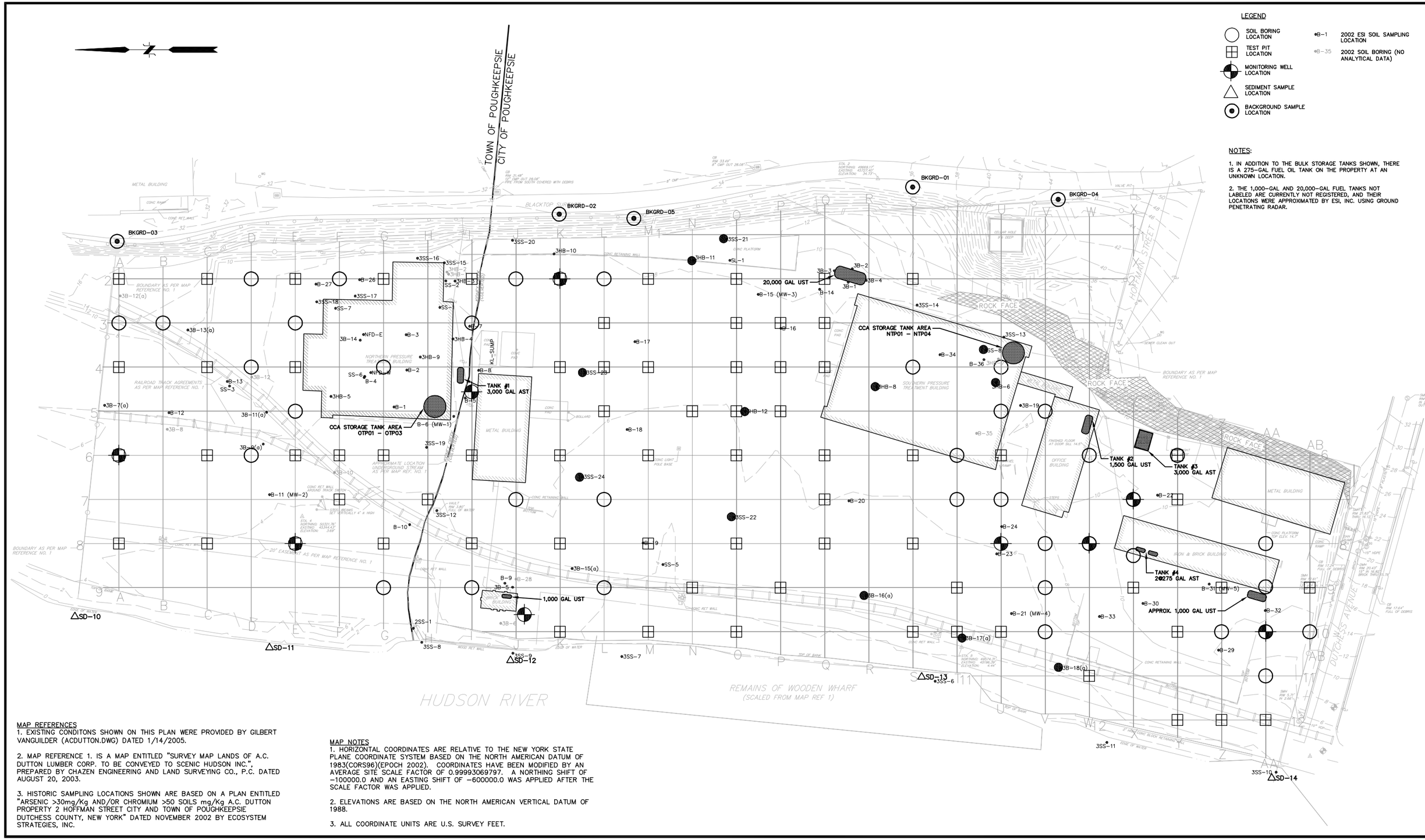

MAP REFERENCES

1. EXISTING CONDITIONS SHOWN ON THIS PLAN WERE PROVIDED BY GILBERT VANGUILDER (ACDUTTON.DWG) DATED 1/14/2005.

2. MAP REFERENCE 1. IS A MAP ENTITLED "SURVEY MAP LANDS OF A.C. DUTTON LUMBER CORP. TO BE CONVEYED TO SCENIC HUDSON INC.", PREPARED BY CHAZEN ENGINEERING AND LAND SURVEYING CO., P.C. DATED AUGUST 20, 2003.

3. HISTORIC SAMPLING LOCATIONS SHOWN ARE BASED ON A PLAN ENTITLED "ARSENIC >30mg/Kg AND/OR CHROMIUM >50 SOILS mg/Kg A.C. DUTTON PROPERTY 2 HOFFMAN STREET CITY AND TOWN OF POUGHKEEPSIE DUTCHESS COUNTY, NEW YORK" DATED NOVEMBER 2002 BY ECOSYSTEM STRATEGIES, INC.

MAP NOTES

1. HORIZONTAL COORDINATES ARE RELATIVE TO THE NEW YORK STATE PLANE COORDINATE SYSTEM BASED ON THE NORTH AMERICAN DATUM OF 1983(CORS96)(EPOCH 2002). COORDINATES HAVE BEEN MODIFIED BY AN AVERAGE SITE SCALE FACTOR OF 0.99993069797. A NORTHING SHIFT OF −100000.0 AND AN EASTING SHIFT OF −600000.0 WAS APPLIED AFTER THE SCALE FACTOR WAS APPLIED.

2. ELEVATIONS ARE BASED ON THE NORTH AMERICAN VERTICAL DATUM OF 1988.

3. ALL COORDINATE UNITS ARE U.S. SURVEY FEET.

No.	DATE	DESCRIPTION	BY
1.			

REVISIONS

PROJ. MANAGER:
CHIEF DESIGNER:
REVIEWED BY: DATE

SCALE:
HORZ.: 1" = 100'
VERT.:
DATUM:
HORZ.:
VERT.:
0 50 100
GRAPHIC SCALE

WWW.FandO.COM
FUSS & O'NEILL
Disciplines to Deliver
80 WASHINGTON ST SUITE 301 POUGHKEEPSIE, NY 12601 845.452.6801

THE O'NEILL GROUP - DUTTON, LLC
FORMER A.C. DUTTON FACILITY
REMEDIAL INVESTIGATION FIELD WORK SUMMARY
2 HOFFMAN STREET

POUGHKEEPSIE NEW YORK

PROJ. No.: 20040764.A1N
DATE: AUGUST 2007

FIG. 4

File Path: F:\P2004\07641A1N\DWG from POK\040764A1NSTP002.dwg, Layout: FIG 5A METALS 0-1' Thu, Aug 16, 2007 - 2:07 PM User: LGwiazdowski
CTB: F&O STANDARD (HALF)
LMAN: METALS 0-1
MS VIEW:
UCS: WORLD

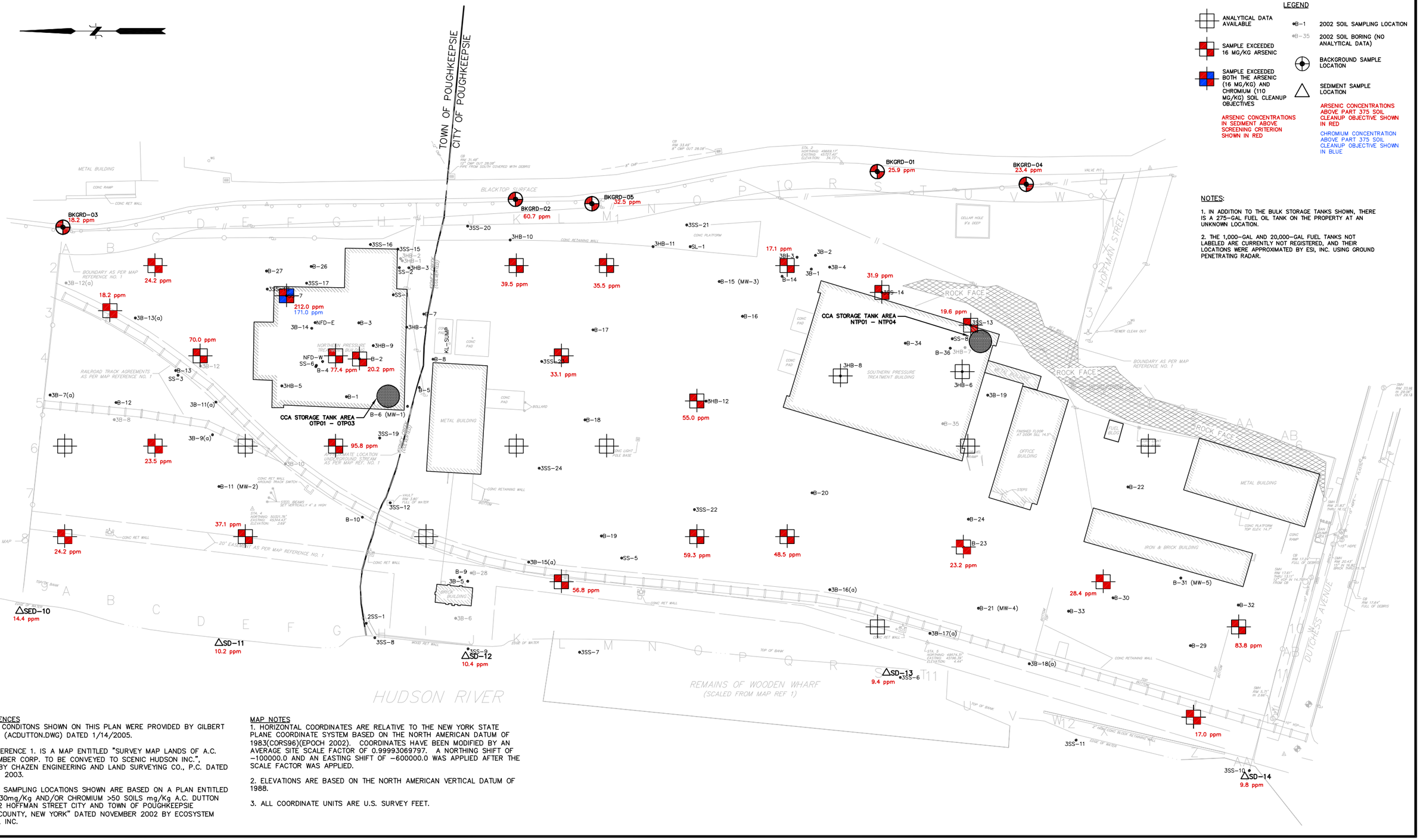

LEGEND

- ANALYTICAL DATA AVAILABLE
- SAMPLE EXCEEDED 16 MG/KG ARSENIC
- SAMPLE EXCEEDED BOTH THE ARSENIC (16 MG/KG) AND CHROMIUM (110 MG/KG) SOIL CLEANUP OBJECTIVES
- ARSENIC CONCENTRATIONS IN SEDIMENT ABOVE SCREENING CRITERION SHOWN IN RED
- B-1 — 2002 SOIL SAMPLING LOCATION
- B-35 — 2002 SOIL BORING (NO ANALYTICAL DATA)
- BACKGROUND SAMPLE LOCATION
- SEDIMENT SAMPLE LOCATION
- ARSENIC CONCENTRATIONS ABOVE PART 375 SOIL CLEANUP OBJECTIVE SHOWN IN RED
- CHROMIUM CONCENTRATION ABOVE PART 375 SOIL CLEANUP OBJECTIVE SHOWN IN BLUE

NOTES:

1. IN ADDITION TO THE BULK STORAGE TANKS SHOWN, THERE IS A 275-GAL FUEL OIL TANK ON THE PROPERTY AT AN UNKNOWN LOCATION.
2. THE 1,000-GAL AND 20,000-GAL FUEL TANKS NOT LABELED ARE CURRENTLY NOT REGISTERED, AND THEIR LOCATIONS WERE APPROXIMATED BY ESI, INC. USING GROUND PENETRATING RADAR.

MAP REFERENCES

1. EXISTING CONDITONS SHOWN ON THIS PLAN WERE PROVIDED BY GILBERT VANGUILDER (ACDUTTON.DWG) DATED 1/14/2005.
2. MAP REFERENCE 1. IS A MAP ENTITLED "SURVEY MAP LANDS OF A.C. DUTTON LUMBER CORP. TO BE CONVEYED TO SCENIC HUDSON INC.", PREPARED BY CHAZEN ENGINEERING AND LAND SURVEYING CO., P.C. DATED AUGUST 20, 2003.
3. HISTORIC SAMPLING LOCATIONS SHOWN ARE BASED ON A PLAN ENTITLED "ARSENIC >30mg/Kg AND/OR CHROMIUM >50 SOILS mg/Kg A.C. DUTTON PROPERTY 2 HOFFMAN STREET CITY AND TOWN OF POUGHKEEPSIE DUTCHESS COUNTY, NEW YORK" DATED NOVEMBER 2002 BY ECOSYSTEM STRATEGIES, INC.

MAP NOTES

1. HORIZONTAL COORDINATES ARE RELATIVE TO THE NEW YORK STATE PLANE COORDINATE SYSTEM BASED ON THE NORTH AMERICAN DATUM OF 1983(CORS96)(EPOCH 2002). COORDINATES HAVE BEEN MODIFIED BY AN AVERAGE SITE SCALE FACTOR OF 0.99993069797. A NORTHING SHIFT OF −100000.0 AND AN EASTING SHIFT OF −600000.0 WAS APPLIED AFTER THE SCALE FACTOR WAS APPLIED.
2. ELEVATIONS ARE BASED ON THE NORTH AMERICAN VERTICAL DATUM OF 1988.
3. ALL COORDINATE UNITS ARE U.S. SURVEY FEET.

No.	DATE	DESCRIPTION	BY
1.			
REVISIONS			

PROJ. MANAGER:
CHIEF DESIGNER:
REVIEWED BY: DATE

SCALE:
HORZ.: 1" = 100'
VERT.:
DATUM:
HORZ.:
VERT.:
0 50 100
GRAPHIC SCALE

WWW.FandO.COM
FUSS & O'NEILL
Disciplines to Deliver
80 WASHINGTON ST SUITE 301 POUGHKEEPSIE, NY 12601 845.452.6801

THE O'NEILL GROUP - DUTTON, LLC
DISTRIBUTION OF ARSENIC AND CHROMIUM (0.0-1.0')
FORMER A.C. DUTTON LUMBER FACILITY
2 HOFFMAN STREET
POUGHKEEPSIE NEW YORK

PROJ. No.: 20040764.A1N
DATE: AUGUST 2007

FIG. 5A

File Path: F:\P2004\07\64\A1N\DWG from POK\040764A1NSTP002.dwg, Layout: FIG 5B METALS 1-3' Thu, Aug 16, 2007 - 2:28 PM User: LGwiazdowski

CTB:

LMAN:

MS VIEW:

UCS: WORLD

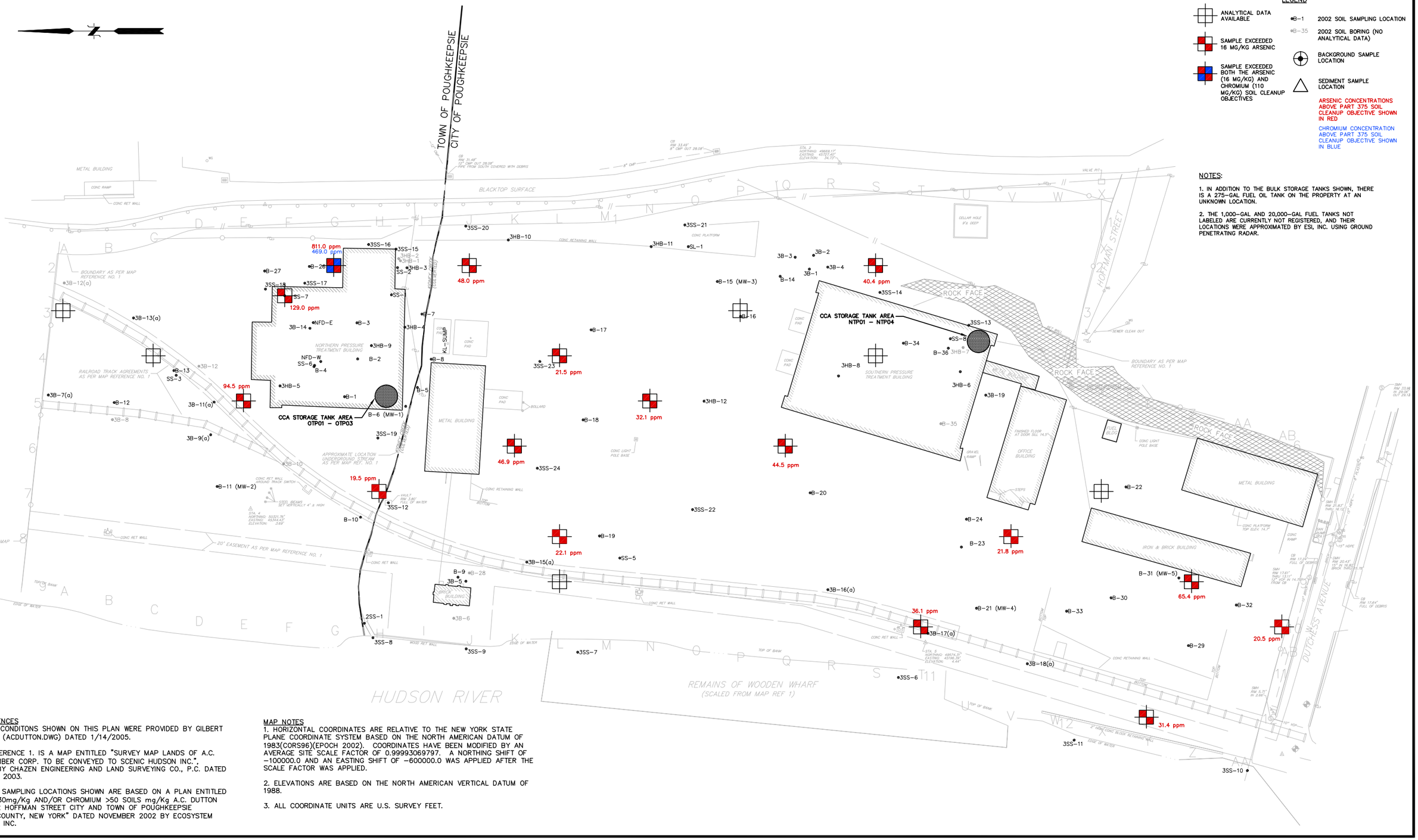

LEGEND

- ANALYTICAL DATA AVAILABLE
- SAMPLE EXCEEDED 16 MG/KG ARSENIC
- SAMPLE EXCEEDED BOTH THE ARSENIC (16 MG/KG) AND CHROMIUM (110 MG/KG) SOIL CLEANUP OBJECTIVES
- •B-1 2002 SOIL SAMPLING LOCATION
- •B-35 2002 SOIL BORING (NO ANALYTICAL DATA)
- BACKGROUND SAMPLE LOCATION
- SEDIMENT SAMPLE LOCATION

ARSENIC CONCENTRATIONS ABOVE PART 375 SOIL CLEANUP OBJECTIVE SHOWN IN RED

CHROMIUM CONCENTRATION ABOVE PART 375 SOIL CLEANUP OBJECTIVE SHOWN IN BLUE

NOTES:

1. IN ADDITION TO THE BULK STORAGE TANKS SHOWN, THERE IS A 275-GAL FUEL OIL TANK ON THE PROPERTY AT AN UNKNOWN LOCATION.

2. THE 1,000-GAL AND 20,000-GAL FUEL TANKS NOT LABELED ARE CURRENTLY NOT REGISTERED, AND THEIR LOCATIONS WERE APPROXIMATED BY ESI, INC. USING GROUND PENETRATING RADAR.

MAP REFERENCES

1. EXISTING CONDITONS SHOWN ON THIS PLAN WERE PROVIDED BY GILBERT VANGUILDER (ACDUTTON.DWG) DATED 1/14/2005.

2. MAP REFERENCE 1. IS A MAP ENTITLED "SURVEY MAP LANDS OF A.C. DUTTON LUMBER CORP. TO BE CONVEYED TO SCENIC HUDSON INC.", PREPARED BY CHAZEN ENGINEERING AND LAND SURVEYING CO., P.C. DATED AUGUST 20, 2003.

3. HISTORIC SAMPLING LOCATIONS SHOWN ARE BASED ON A PLAN ENTITLED "ARSENIC >30mg/Kg AND/OR CHROMIUM >50 SOILS mg/Kg A.C. DUTTON PROPERTY 2 HOFFMAN STREET CITY AND TOWN OF POUGHKEEPSIE DUTCHESS COUNTY, NEW YORK" DATED NOVEMBER 2002 BY ECOSYSTEM STRATEGIES, INC.

MAP NOTES

1. HORIZONTAL COORDINATES ARE RELATIVE TO THE NEW YORK STATE PLANE COORDINATE SYSTEM BASED ON THE NORTH AMERICAN DATUM OF 1983(CORS96)(EPOCH 2002). COORDINATES HAVE BEEN MODIFIED BY AN AVERAGE SITE SCALE FACTOR OF 0.99993069797. A NORTHING SHIFT OF −100000.0 AND AN EASTING SHIFT OF −600000.0 WAS APPLIED AFTER THE SCALE FACTOR WAS APPLIED.

2. ELEVATIONS ARE BASED ON THE NORTH AMERICAN VERTICAL DATUM OF 1988.

3. ALL COORDINATE UNITS ARE U.S. SURVEY FEET.

No.	DATE	DESCRIPTION	BY
1.			

REVISIONS

PROJ. MANAGER:
CHIEF DESIGNER:
REVIEWED BY: DATE

SCALE:
HORZ.: 1" = 100'
VERT.:
DATUM:
HORZ.:
VERT.:
0 50 100
GRAPHIC SCALE

WWW.FandO.COM
FUSS & O'NEILL
Disciplines to Deliver
80 WASHINGTON ST SUITE 301 POUGHKEEPSIE, NY 12601 845.452.6801

THE O'NEILL GROUP - DUTTON, LLC
DISTRIBUTION OF ARSENIC AND CHROMIUM (1.0-3.0')
FORMER A.C. DUTTON LUMBER FACILITY
2 HOFFMAN STREET

POUGHKEEPSIE NEW YORK

PROJ. No.: 20040764.A1N
DATE: AUGUST 2007

FIG. 5B

File Path: F:\P2004\07\64\A1N\DWG from POK\040764A1NSTP002.dwg, Layout: FIG. 6 AOCS PETROL Mon, Aug 27, 2007 - 2:38 PM User: LGwiazdowski

CTB: F&O COLOR STANDARD (HALF)

LMAN: SOIL RAP

MS VIEW:

UCS: WORLD

LEGEND

- SOIL BORING LOCATION
- TEST PIT LOCATION
- MONITORING WELL LOCATION
- SEDIMENT SAMPLE LOCATION

NOTES:

1. IN ADDITION TO THE BULK STORAGE TANKS SHOWN, THERE IS A 275-GAL FUEL OIL TANK ON THE PROPERTY AT AN UNKNOWN LOCATION.

2. THE 1,000-GAL AND 20,000-GAL FUEL TANKS NOT LABELED ARE CURRENTLY NOT REGISTERED, AND THEIR LOCATIONS WERE APPROXIMATED BY ESI, INC. USING GROUND PENETRATING RADAR.

TOWN OF POUGHKEEPSIE
CITY OF POUGHKEEPSIE

NORTH WATER STREET

HOFFMAN STREET

DUTCHESS AVENUE

AOC-1

AOC-2

AOC-3

AOC-4

TANK #1
3,000 GAL AST

20,000 GAL UST

TANK #2
1,500 GAL UST

TANK #3
3,000 GAL AST

TANK #4
20275 GAL AST

1,000 GAL UST

APPROX. 1,000 GAL UST

BLACKTOP SURFACE

METAL BUILDING

NORTHERN PRESSURE TREATMENT BUILDING

SOUTHERN PRESSURE TREATMENT BUILDING

IRON & BRICK BUILDING

ROCK FACE

BOUNDARY AS PER MAP REFERENCE NO. 1

RAILROAD TRACK AGREEMENTS AS PER MAP REFERENCE NO. 1

APPROXIMATE LOCATION UNDERGROUND STREAM AS PER MAP REF. NO. 1

20' EASEMENT AS PER MAP REFERENCE NO. 1

REMAINS OF WOODEN WHARF (SCALED FROM MAP REF. 1)

HUDSON RIVER

PETROLEUM-IMPACTED AREA OF CONCERN

MAP REFERENCES

1. EXISTING CONDITONS SHOWN ON THIS PLAN WERE PROVIDED BY GILBERT VANGUILDER (ACDUTTON.DWG) DATED 1/14/2005.

2. MAP REFERENCE 1. IS A MAP ENTITLED "SURVEY MAP LANDS OF A.C. DUTTON LUMBER CORP. TO BE CONVEYED TO SCENIC HUDSON INC.", PREPARED BY CHAZEN ENGINEERING AND LAND SURVEYING CO., P.C. DATED AUGUST 20, 2003.

3. HISTORIC SAMPLING LOCATIONS SHOWN ARE BASED ON A PLAN ENTITLED "ARSENIC >30mg/Kg AND/OR CHROMIUM >50 SOILS mg/Kg A.C. DUTTON PROPERTY 2 HOFFMAN STREET CITY AND TOWN OF POUGHKEEPSIE DUTCHESS COUNTY, NEW YORK" DATED NOVEMBER 2002 BY ECOSYSTEM STRATEGIES, INC.

MAP NOTES

1. HORIZONTAL COORDINATES ARE RELATIVE TO THE NEW YORK STATE PLANE COORDINATE SYSTEM BASED ON THE NORTH AMERICAN DATUM OF 1983(CORS96)(EPOCH 2002). COORDINATES HAVE BEEN MODIFIED BY AN AVERAGE SITE SCALE FACTOR OF 0.99993069797. A NORTHING SHIFT OF -100000.0 AND AN EASTING SHIFT OF -600000.0 WAS APPLIED AFTER THE SCALE FACTOR WAS APPLIED.

2. ELEVATIONS ARE BASED ON THE NORTH AMERICAN VERTICAL DATUM OF 1988.

3. ALL COORDINATE UNITS ARE U.S. SURVEY FEET.

No.	DATE	DESCRIPTION	BY
1.			

REVISIONS

PROJ. MANAGER:
CHIEF DESIGNER:
REVIEWED BY: DATE

SCALE:
HORZ.: 1" = 100'
VERT.:
DATUM:
HORZ.:
VERT.:
0 50 100
GRAPHIC SCALE

WWW.FandO.COM
FUSS & O'NEILL
Disciplines to Deliver
80 WASHINGTON ST SUITE 301 POUGHKEEPSIE, NY 12601 845.452.6801

THE O'NEILL GROUP - DUTTON, LLC
ESTIMATED PETROLEUM AOC'S
FORMER A.C. DUTTON LUMBER FACILITY
2 HOFFMAN STREET
POUGHKEEPSIE NEW YORK

PROJ. No.: 20040764.A1N
DATE: AUGUST 2007

FIG. 6

APPENDIX B

NYSDEC LETTER

New York State Department of Environmental Conservation
Division of Environmental Remediation
Remedial Bureau C, 11th Floor
625 Broadway, Albany, New York 12233-7014
Phone: (518) 402-9662 • **Fax:** (518) 402-9679
Website: www.dec.ny.gov

Joe Martens
Commissioner

December 4, 2012

Paul Ciminello
Ecosystems Strategies Inc.
24 Davis Avenue
Poughkeepsie, NY 12603

RE: Former AC Dutton Site
Site ID No. C314081
City and Town of Poughkeepsie, Dutchess County
Minor Change to Remedy

Dear Mr. Ciminello:

The New York State Department of Environmental Conservation (Department) has reviewed the request to redefine the site-specific soil cleanup objective for arsenic as defined in Project Status Report #17 for the above reference site dated November 20, 2012. As detailed in the enclosed memorandum dated December 3, 2012 the Department approves this minor modification to the remedy. The site specific soil cleanup objective for arsenic is hereby redefined from the background value of 32 mg/kg to 300 mg/kg as requested.

Please note that several areas inside the Northern Pressure Treatment Plant (NP & NR) and several areas outside of the pressure treatment buildings (3SS-15 and 3SS-19) were shown to exceed arsenic levels above 300 mg/kg on the figures provided (figures 1 and 2, respectively). However, these areas were not shown to be areas of proposed excavation. Please ensure that all areas where soil exceeds the soil cleanup objective for arsenic are excavated and disposed off-site.

If you have any questions or comments please feel free to contact me at (518) 402-9662.

Sincerely,

Jamie Verrigni
Project Manager
Remedial Bureau C
Division of Environmental Remediation

New York State Department of Environmental Conservation
Division of Environmental Remediation
Remedial Bureau C, 11th Floor
625 Broadway, Albany, New York 12233-7014
Phone: (518) 402-9662 • **Fax:** (518) 402-9679
Website: www.dec.ny.gov

Joe Martens
Commissioner

MEMORANDUM

TO: Michael Ryan, Director, Remedial Bureau C

FROM: Jamie Verrigni, Project Manager
George Heitzman, Section Chief, Remedial Section A

SUBJECT: Former AC Dutton Lumber Yard, Site No. C314081
Minor Change to Selected Remedy

DATE: December 3, 2012

This memorandum serves to define and document the basis for the minor change to the selected remedy for the Former AC Dutton Lumber Yard Site.

The change involves redefining the site specific soil cleanup objective for arsenic for the site from the background value of 32 mg/kg to 300 mg/kg. The proposed modification takes into account that at least a four foot cover will be placed at the site as part of redevelopment that will provide an additional barrier to direct exposure to contamination remaining at the site. Grossly contaminated material as defined by 6 NYCRR 375-1.2(u) and material otherwise obviously impacted by site contaminants (e.g., obviously stained yellow, green or blue) will be excavated and disposed off-site, as originally proposed. Existing groundwater data documents the absence of significant arsenic impacts to groundwater and indicates that under site conditions, arsenic is not expected to leach at levels above groundwater standards for a 300 mg/kg cleanup level.

The proposed modification is protective of human health and the environment.

We ask you approve this minor change.

Approved

APPENDIX C

STORM WATER POLLUTION PREVENTION PLAN

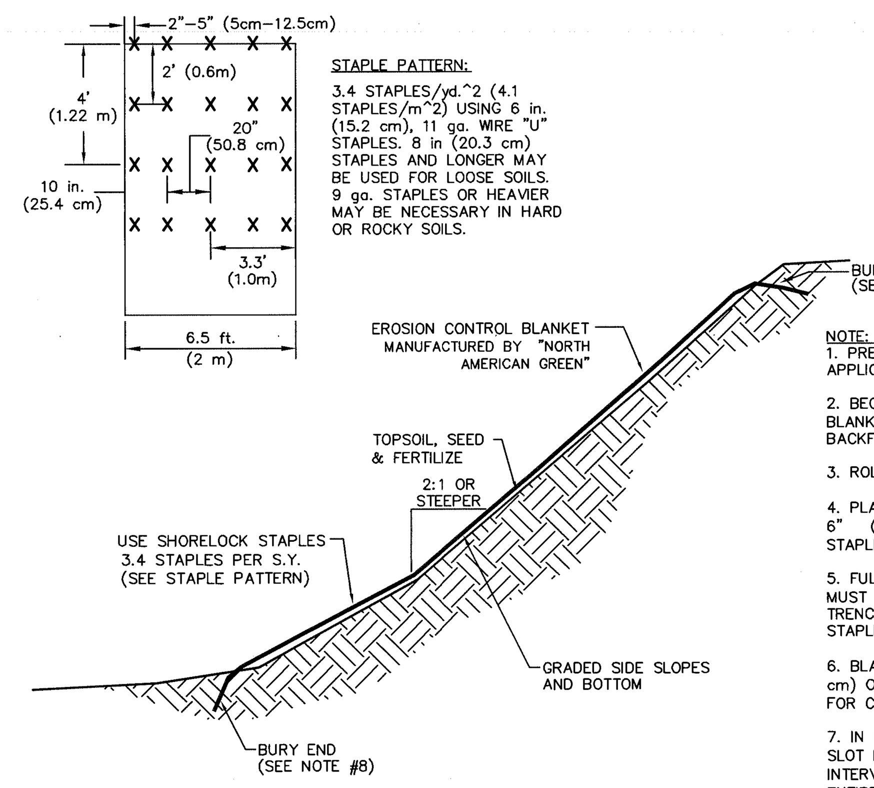

STAPLE PATTERN:

3.4 STAPLES/yd.^2 (4.1 STAPLES/m^2) USING 6 in. (15.2 cm), 11 ga. WIRE "U" STAPLES. 8 in (20.3 cm) STAPLES AND LONGER MAY BE USED FOR LOOSE SOILS. 9 ga. STAPLES OR HEAVIER MAY BE NECESSARY IN HARD OR ROCKY SOILS.

NOTE:

1. PREPARE SOIL BEFORE INSTALLING BLANKETS, INCLUDING APPLICATION OF TOPSOIL, FERTILIZER, AND SEED.

2. BEGIN AT THE TOP OF THE SLOPE BY ANCHORING THE BLANKET IN A 6" (15 cm) DEEP x 6" (15 cm) WIDE TRENCH. BACKFILL AND COMPACT THE TRENCH AFTER STAPLING.

3. ROLL BLANKETS IN DIRECTION OF WATER FLOW.

4. PLACE BLANKETS END OVER END (SHINGLE STYLE) WITH A 6" (15 cm) OVERLAP. USE A DOUBLE ROW OF STAGGERED STAPLES 4" (10cm) APART TO SECURE BLANKETS.

5. FULL LENGTH EDGE OF BLANKETS AT TOP OF SIDE SLOPES MUST BE ANCHORED IN 6" (15 cm) DEEP X 6" (15 cm) WIDE TRENCH. BACKFILL AND COMPACT THE TRENCH AFTER STAPLING.

6. BLANKETS ON SIDE SLOPES MUST BE OVERLAPPED 4" (10 cm) OVER THE CENTER BLANKET AND STAPLED [2" (5 cm) FOR C350 MATTING].

7. IN HIGH FLOW CHANNEL APPLICATIONS, A STAPLE CHECK SLOT IS RECOMMENDED AT 30 TO 40 FOOT (9 m TO 12 m) INTERVALS. USE A ROW OF STAPLES 4" (10 cm) APART OVER ENTIRE WIDTH OF THE CHANNEL. PLACE A SECOND ROW 4" (10 cm) BELOW THE FIRST ROW IN A STAGGERED PATTERN.

8. THE TERMINAL END OF THE BLANKETS MUST BE ANCHORED IN A 6" (15 cm) DEEP X 6" (15 cm) WIDE TRENCH. BACKFILL AND COMPACT THE TRENCH AFTER STAPLING.

9. EROSION CONTROL BLANKET SHALL BE MANUFACTURED BY "NORTH AMERICAN GREEN" EVANSVILLE, INDIANA; OR APPROVED EQUAL.

10. USE WHEN EARTHEN SLOPE IS EQUAL TO OR STEEPER THAN 2:1.

SEEDING NOTE:

1. FILL SECTIONS SHOULD BE STABILIZED AND SEEDED WITH PERMANENT SEED MIXTURES AS DESCRIBED IN THE GENERAL SOIL EROSION AND SEDIMENT CONTROL NOTES.

2. ROCK CUT SECTIONS SHOULD BE STABILIZED AND SEEDED WITH CROWNVETCH (CORONILLA VARIA L.)

SLOPE STABILIZATION DETAIL

N.T.S

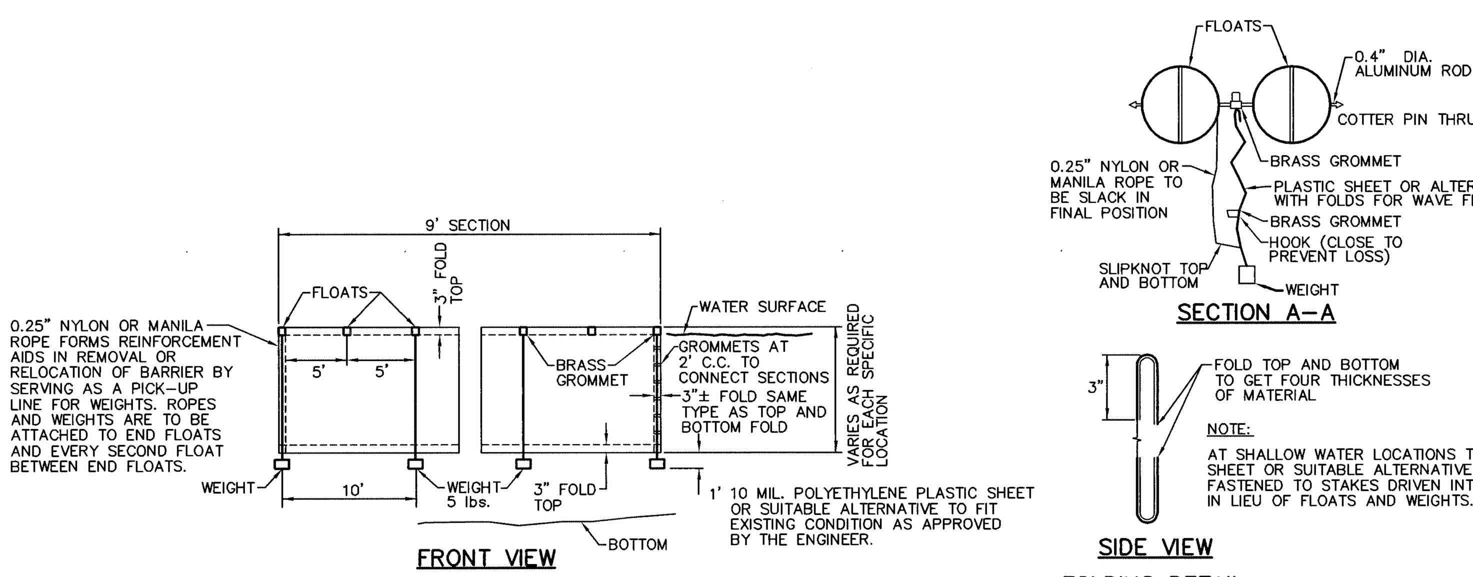

NOTE:

AT SHALLOW WATER LOCATIONS THE PLASTIC SHEET OR SUITABLE ALTERNATIVE MAY BE FASTENED TO STAKES DRIVEN INTO THE BOTTOM IN LIEU OF FLOATS AND WEIGHTS.

FLOATING TURBIDITY BARRIER

N.T.S.

GENERAL NOTES:

1. PLACE SILT BARRIER TO PREVENT DRIFTING OF SILT CAUSED BY DISCHARGE OF STORM SEWERS DURING CONSTRUCTION, DREDGING OR FILLING OPERATIONS.
2. EXACT PLACEMENT OF SILT BARRIER SHALL BE SO AS TO EFFECTIVELY CONTROL SILT DISPERSION UNDER THE CONDITIONS PRESENT ON A PARTICULAR PROJECT.
3. THE DETAILS SHOWN ON THIS SHEET ARE SUGGESTED METHODS ONLY ALTERNATIVE SOLUTION AND USAGE OF MATERIALS MAY BE USED AS APPROVED.

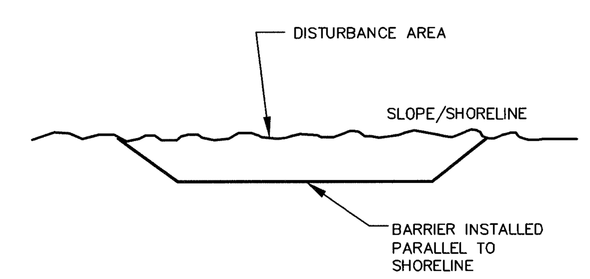

NOTE:

TURBIDITY CURTAIN SHALL BE INSTALLED IN SUCH A MANNER TO COMPLETELY SURROUND ALL PROPOSED DISTURBANCE ACTIVITIES AND SHALL BE PHASED WITH THE WORK LINEARLY ALONG THE SHORELINE.

CONTAINMENT FROM IN-CHANNEL DISTURBANCE

PLACEMENT OF FLOATING TURBIDITY BARRIER

N.T.S.

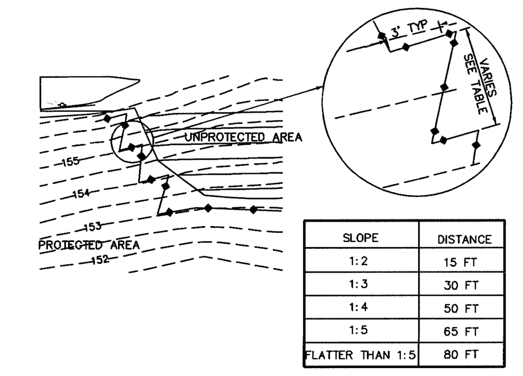

SLOPE	DISTANCE
1:2	15 FT
1:3	30 FT
1:4	50 FT
1:5	65 FT
FLATTER THAN 1:5	80 FT

SILT FENCE INSTALLATION

(WHEN NOT PARALLEL TO CONTOURS)

N.T.S.

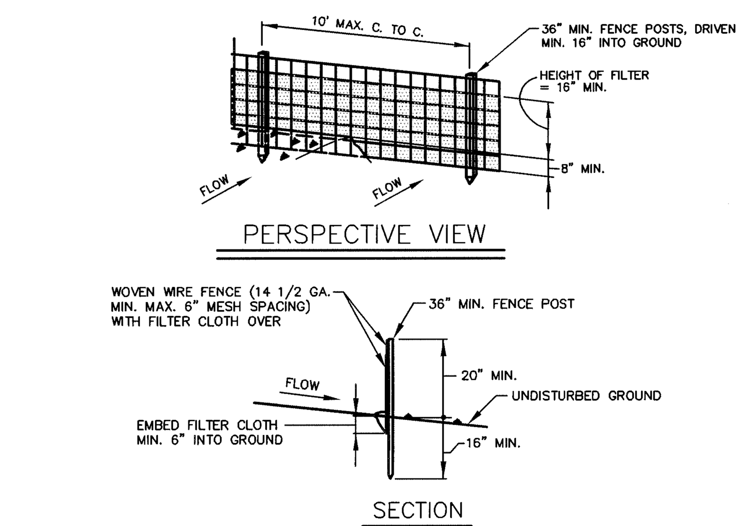

CONSTRUCTION NOTES FOR FABRICATED SILT FENCE

1. WOVEN WIRE FENCE TO BE FASTENED SECURELY TO FENCE POSTS WITH WIRE TIES OR STAPLES.
2. FILTER CLOTH TO BE FASTENED SECURELY TO WOVEN WIRE FENCE WITH TIES SPACED EVERY 24" AT TOP AND MID SECTION.
3. WHEN TWO SECTIONS OF FILTER CLOTH ADJOIN EACH OTHER THEY SHALL BE OVERLAPPED BY SIX INCHES AND FOLDED.
4. MAINTENANCE SHALL BE PERFORMED AS NEEDED AND MATERIAL REMOVED WHEN "BULGES" DEVELOP IN THE SILT FENCE.

POSTS: STEEL EITHER "T" OR "U" TYPE OR 2" HARDWOOD.

FENCE: WOVEN WIRE 14 1/2 GA. 6" MAX. MESH OPENING.

FILTER CLOTH: FILTER X, MIRAFI 100X, STABILINKA T140N, OR APPROVED EQUAL.

PREFABRICATED UNIT: GEOFAB, ENVIROFENCE, OR APPROVED EQUAL.

WIRE REINFORCED SILT FENCE

N.T.S.

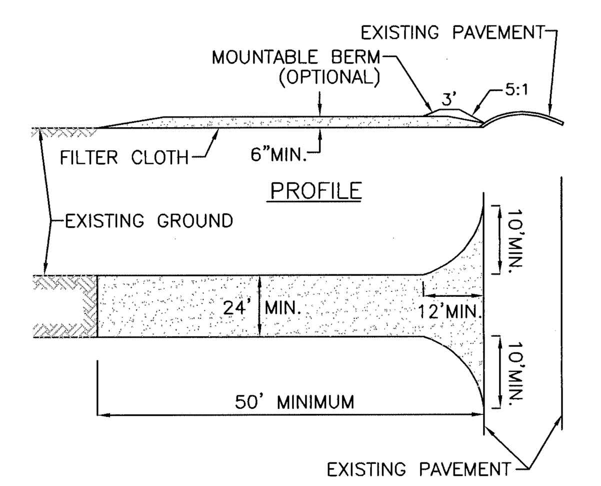

1. STONE SIZE – USE 2" STONE, OR RECLAIMED OR RECYCLED CONCRETE EQUIVALENT.
2. LENGTH – NOT LESS THAN 50 FEET
3. THICKNESS – NOT LESS THAN (6) INCHES.
4. WIDTH – 24'
5. FILTER CLOTH – WILL BE PLACED OVER THE ENTIRE AREA PRIOR TO PLACING OF STONE.
6. SURFACE WATER – ALL SURFACE WATER FLOWING OR DIVERTED TOWARD CONSTRUCTION ENTRANCES SHALL BE PIPED ACROSS THE ENTRANCE. IF PIPING IS IMPRACTICAL, A MOUNTING BERM WITH 5:1 SLOPES WILL BE PERMITTED.
7. MAINTENANCE – THE ENTRANCE SHALL BE MAINTAINED IN A CONDITION WHICH WILL PREVENT TRACKING OR FLOWING OF SEDIMENT ONTO PUBLIC RIGHTS-OF-WAY. ALL SEDIMENT SPILLED, DROPPED, WASHED OR TRACKED ONTO PUBLIC RIGHTS-OF-WAY MUST BE REMOVED IMMEDIATELY.
8. WHEN WASHING IS REQUIRED, IT SHALL BE DONE ON AN AREA STABILIZED WITH STONE AND WHICH DRAINS INTO AN APPROVED SEDIMENT TRAPPING DEVICE.
9. PERIODIC INSPECTION AND NEEDED MAINTENANCE SHALL BE PROVIDED AFTER EACH RAIN.

STABILIZED CONSTRUCTION ENTRANCE

N.T.S.

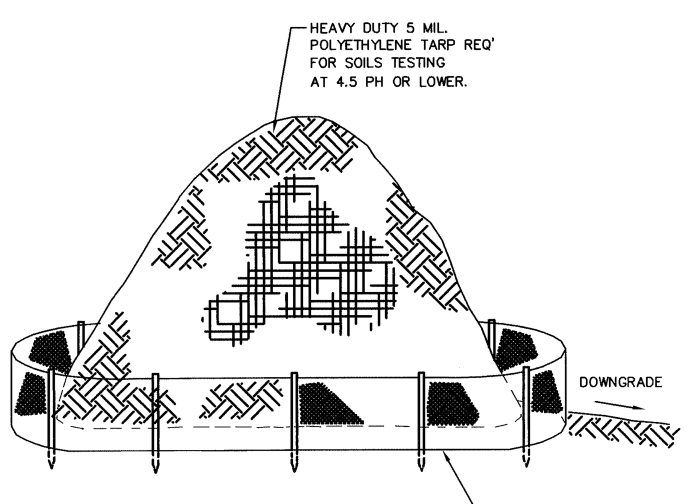

SOIL STOCKPILE

N.T.S.

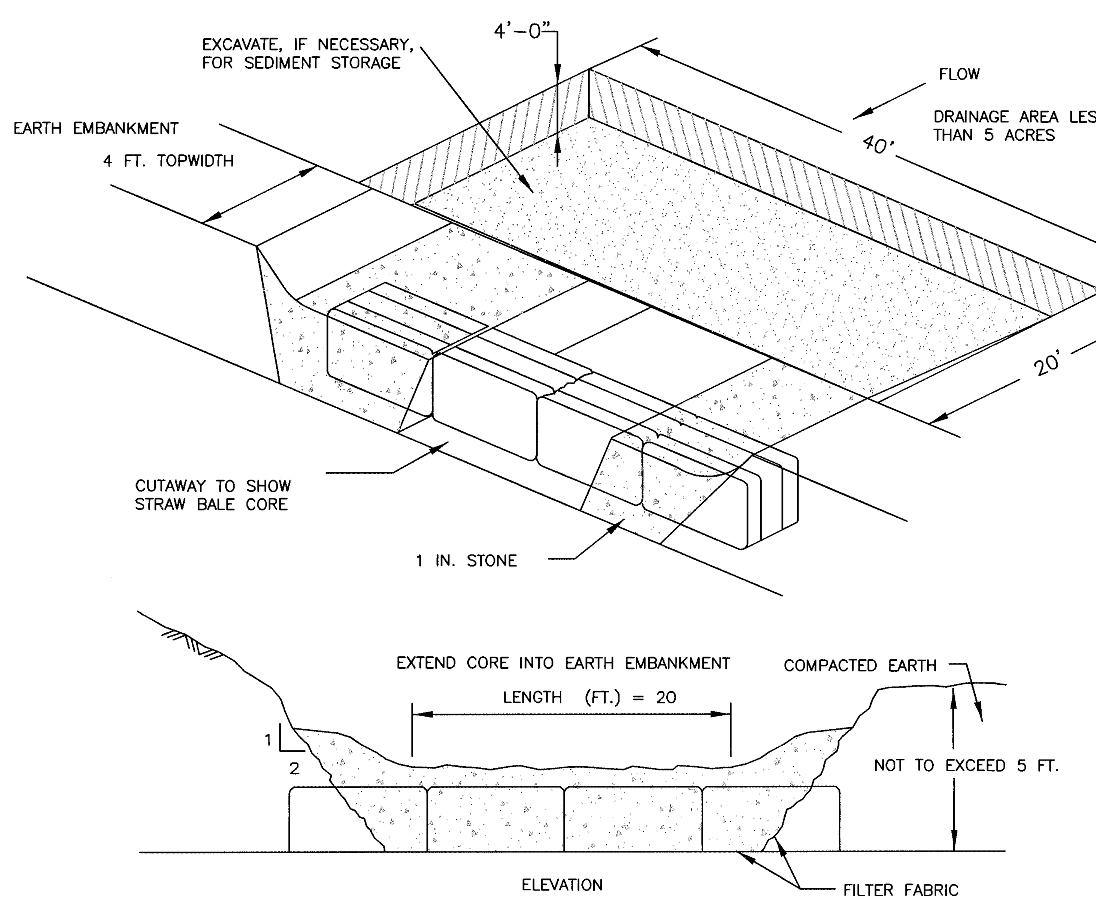

TO BE INSTALLED PRIOR TO GRADING OR FILLING IN THE DRAINAGE AREA THEY ARE TO PROTECT. TRAPS THAT ARE TO FUNCTION DURING BUILDING CONSTRUCTION MUST NOT BE LOCATED WITHIN 20 FEET OF A PROPOSED BUILDING FOUNDATION. WHILE TRAPS SHOULD BE SITED TO MAXIMIZE STORAGE BENEFIT, THEY SHOULD NOT BE LOCATED WETLAND OR WETLAND BUFFER AREAS, OR IN EXISTING WATERCOURSES.

SEE EROSION AND SEDIMENT CONTROL PLAN FOR LOCATIONS.

INSTALLATION NOTES

1. AREA UNDER EMBANKMENT SHALL BE CLEARED, GRUBBED, AND STRIPPED OF ANY VEGETATION AND ROOT MAT. THE POOL AREA SHALL BE CLEARED AS WELL.
2. THE FILL MATERIAL FOR THE EMBANKMENT SHALL BE FREE OF ROOTS OR OTHER WOODY VEGETATION AS WELL AS OVER SIZED STONES, ROCKS, ORGANIC MATERIAL AND OTHER QUESTIONABLE MATERIAL. THE EMBANKMENT SHALL BE COMPACTED BY TRAVERSING WITH EQUIPMENT WHILE IT IS BEING CONSTRUCTED.
3. SEDIMENT SHALL BE REMOVED AND TRAP RESTORED TO ITS ORIGINAL DIMENSIONS WHEN THE SEDIMENT HAS ACCUMULATED TO 1/2 THE DESIGN DEPTH OF THE TRAP. REMOVED SEDIMENT SHALL BE DEPOSITED IN A SUITABLE AREA AND IN SUCH A MANNER THAT IT WILL NOT ERODE.
4. THE STRUCTURE SHALL BE INSPECTED AFTER EACH RAIN AND REPAIRS MADE AS NEEDED.
5. CONSTRUCTION OPERATIONS SHALL BE CARRIED OUT IN SUCH A MANNER THAT EROSION AND WATER POLLUTION IS MINIMIZED.
6. THE STRUCTURE SHALL BE REMOVED AND THE AREA STABILIZED WHEN THE DRAINAGE AREA HAS BEEN PROPERLY STABILIZED.
7. ALL CUT AND FILL SLOPES SHALL BE 1 : 2 OR FLATTER.
8. THE STONE USED IN THE OUTLET SHALL BE SMALL RIPRAP 4"–8" ALONG WITH A 1' THICKNESS OF 2" AGGREGATE PLACED ON THE UP GRADE SIDE ON THE SMALL RIPRAP OR EMBEDDED FILTER CLOTH IN THE RIPRAP.

STONE OUTLET SEDIMENT TRAP

N.T.S.

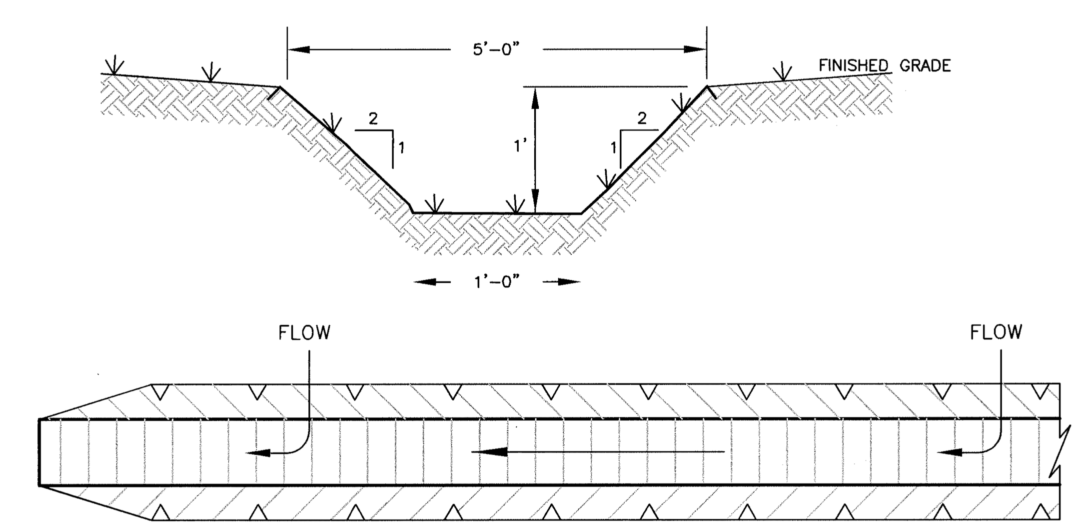

0.5% OR GREATER, DEPENDENT ON TOPOGRAPHY

PLAN

TO BE INSTALLED ABOVE DISTURBED AREAS, TO DIVERT RUNOFF OFF-SITE WITHOUT INCREASING EROSION; INTERMITTENTLY ACROSS DISTURBED AREAS, TO SHORTEN OVERLAND FLOW DISTANCES; BELOW DISTURBED AREAS, TO DIVERT SEDIMENT-LADEN WATER TO A SEDIMENT TRAPPING DEVICE; AND TO SAFELY TRANSPORT RUNOFF ALONG ROADWAYS.

SEE PLANS FOR LOCATIONS.

INSTALLATION NOTES

1. ALL SWALES SHALL HAVE UNINTERRUPTED POSITIVE GRADE TO AN OUTLET.
2. DIVERTED RUNOFF FROM A DISTURBED AREA SHALL BE CONVEYED TO A SEDIMENT TRAPPING DEVICE.
3. DIVERTED RUNOFF FROM AN UNDISTURBED AREA SHALL OUTLET DIRECTLY INTO AN UNDISTURBED STABILIZED AREA AT NON-EROSIVE VELOCITY.
4. ALL TREES, BRUSH, STUMPS, OBSTRUCTIONS AND OTHER OBJECTIONABLE MATERIAL SHALL BE REMOVED AND DISPOSED OF SO AS NOT TO INTERFERE WITH THE PROPER FUNCTIONING OF THE SWALE.
5. THE SWALE SHALL BE EXCAVATED OR SHAPED TO LINE, GRADE AND CROSS SECTION AS REQUIRED TO MEET THE CRITERIA SPECIFIED HEREIN AND BE FREE OF BANK PROJECTIONS OR OTHER IRREGULARITIES WHICH WILL IMPEDE NORMAL FLOW.
6. FILLS SHALL BE COMPACTED BY EARTH MOVING EQUIPMENT.
7. ALL EARTH REMOVED AND NOT NEEDED FOR CONSTRUCTION SHALL BE PLACED SO AS NOT TO INTERFERE WITH THE FUNCTIONING OF THE SWALE.
8. INSPECTION AND MAINTENANCE MUST BE PROVIDED AFTER EACH RAIN EVENT.
9. STABILIZATION SHALL BE SEED AND STRAW MULCH.

TEMPORARY SWALE

N.T.S.

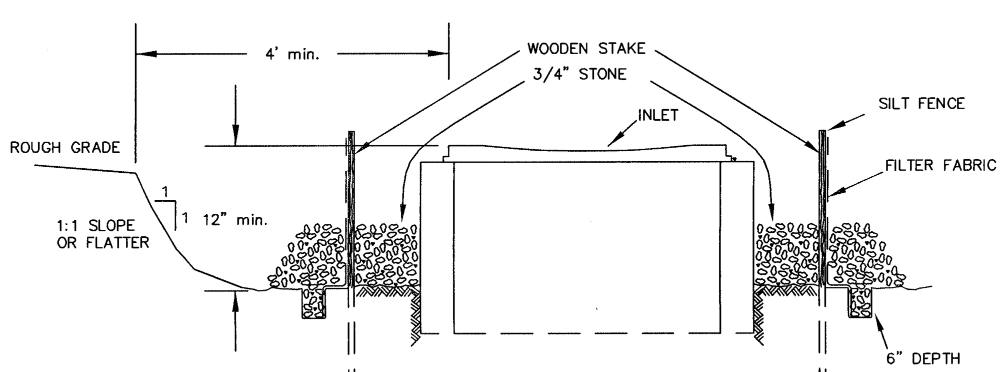

INSTALLATION NOTES

1. EXCAVATE A 6 INCH x 6 INCH TRENCH, OFFSET APPROXIMATELY 2 FEET FROM THE INLET PERIMETER.
2. UNROLL A SECTION AT A TIME AND POSITION THE POSTS AGAINST THE BACK (DOWNSTREAM) WALL OF THE TRENCH (NET SIDE AWAY FROM DIRECTION OF FLOW).
3. DRIVE THE POST INTO THE GROUND UNTIL THE NETTING IS APPROXIMATELY 2 INCHES FROM THE TRENCH BOTTOM.
4. LAY THE TOE-IN FLAP OF FABRIC ONTO THE UNDISTURBED BOTTOM OF THE TRENCH, BACKFILL THE TRENCH AND TAMP THE SOIL. STEEPER SLOPES REQUIRE AN INTERCEPT TRENCH.
5. JOIN SECTIONS AS SHOWN ABOVE. SUPPLEMENT WITH GRAVEL, PILED AGAINST THE FENCE.
6. SEDIMENT SHALL BE REMOVED AND THE TRAP RESTORED TO ITS ORIGINAL DIMENSIONS WHEN THE SEDIMENT HAS ACCUMULATED TO 1/2 THE DESIGN DEPTH OF THE TRAP.
7. THE STRUCTURE SHALL BE INSPECTED AFTER EACH RAIN AND REPAIRS MADE AS NEEDED.

STORM INLET SEDIMENT TRAP

N.T.S.

COPYRIGHT © 2010, MASER CONSULTING P.A.–ALL RIGHTS RESERVED
THIS DRAWING AND ALL THE INFORMATION CONTAINED HEREIN IS AUTHORIZED FOR USE ONLY BY THE PARTY FOR WHOM THE WORK WAS CONTRACTED OR TO WHOM IT IS CERTIFIED. THIS DRAWING MAY NOT BE COPIED, REUSED, DISCLOSED, DISTRIBUTED OR RELIED UPON FOR ANY OTHER PURPOSE WITHOUT THE EXPRESS WRITTEN CONSENT OF MASER CONSULTING, P.A.

REV	DATE	DRAWN BY	DESCRIPTION
9	08/27/15	JAP	REVISIONS PER DOH COMMENTS
8	07/10/15	JAP	REVISIONS PER DCDH COMMENTS
7	06/10/15	JJS	REVISIONS PER CITY RESOLUTION & DCHD COMMENTS
6	1/30/15	CMR	REVISIONS PER CITY RESOLUTION
5	10/29/14	JJS	REVISIONS PER CITY/TOWN/CLIENT COMMENTS
4	08/26/14	JJS	REVISIONS TO SITE PLAN PER TOWN COMMENTS
3	06/23/14	AT	REVISIONS TO SITE PLAN PER TOWN/CITY COMMENTS
2	03/18/14	AT	REVISIONS TO SITE PLAN PER CITY COMMENTS
1	01/21/14	AT	ADVANCED PLAN SET FOR PUBLIC HEARING

UNAUTHORIZED ALTERATION TO A MAP BEARING A LICENSED PROFESSIONAL ENGINEER'S SEAL IS A VIOLATION OF SECTION 7209, SUB-DIVISION 2, OF THE NEW YORK STATE EDUCATION LAW. THE CERTIFICATION IS NOT AN EXPRESS OR IMPLIED WARRANTY OR GUARANTEE, IT IS PURELY A STATEMENT OF PROFESSIONAL OPINION BASED ON KNOWLEDGE, INFORMATION AND BELIEF, BASED ON EXISTING FIELD EVIDENCE AND DOCUMENTARY EVIDENCE AVAILABLE. CERTIFICATIONS ARE NOT TRANSFERABLE TO ADDITIONAL INSTITUTIONS OR SUBSEQUENT OWNERS.

ANDREW B. FETHERSTON
NEW YORK STATE PROFESSIONAL ENGINEER LIC. NO. 073555

MASER CONSULTING P.A.
Consulting, Municipal & Environmental Engineers
Planners ▪ Surveyors ▪ Landscape Architects
State of N.Y. Certificate of Authorization: 0000172
New Jersey New York Pennsylvania Virginia
Customer Loyalty *through* Client Satisfaction

COPYRIGHT © 2013, MASER CONSULTING P.A.
ALL RIGHTS RESERVED
THIS DRAWING AND ALL THE INFORMATION CONTAINED HEREIN IS AUTHORIZED FOR USE ONLY BY THE PARTY FOR WHOM THE WORK WAS CONTRACTED OR TO WHOM IT IS CERTIFIED. THIS DRAWING MAY NOT BE COPIED, REUSED, DISCLOSED, DISTRIBUTED OR RELIED UPON FOR ANY OTHER PURPOSE WITHOUT THE EXPRESS WRITTEN CONSENT OF MASER CONSULTING P.A.

NEWBURGH OFFICE
1607 Route 300
Suite 101
Newburgh, NY 12550
Phone: 845.564.4495
Fax: 845.564.0278
email: solutions@maserconsulting.com

ONE DUTCHESS AVENUE

EROSION CONTROL DETAIL SHEET

FOR

THE O'NEILL GROUP-DUTTON, LLC

TAX LOTS 6062-02-763508 & 6062-59-766443

TOWN/CITY OF POUGHKEEPSIE DUTCHESS COUNTY NY

SCALE:	DATE:	DRAWN BY:	CHECKED BY:
AS SHOWN	06/13/13	JJS	ABF

PROJECT NUMBER: 07001417B NB001556

SHEET NUMBER: 20 of 26

APPENDIX D

RIP-RAP DESIGN MATERIALS

OWNER/APPLICANT:

THE O'NEILL GROUP – DUTTON, LLC
241 HUDSON STREET
HACKENSACK, NJ 07601

SITE AREA:

EXISTING
TOTAL SITE AREA:
±648,186 SQ. FT.
±14.88 ACRES

CITY OF POUGHKEEPSIE (LOT # 766443) = ±10.82 ACRES

PROPOSED PROJECT AREAS:

CITY OF POUGHKEEPSIE
–DEVELOPMENT AREA = ±8.87 ACRES
–WATERFRONT GREENWAY TRAIL AREA = ±1.95 ACRES

NOTES:

1. BOUNDARY, TOPOGRAPHIC, AND HIGH/LOW WATER INFORMATION SHOWN HEREON IS TAKEN FROM A PLAN PREPARED BY LARRY L. LYNN, L.S. ENTITLED "PLOT PLAN FOR/TO THE O'NEILL GROUP–DUTTON, LLC" DATED JULY 11, 2008, LAST REVISED MARCH 15, 2013.
2. FLOOD ELEVATIONS:
   100 YEAR FLOOD ELEVATION = 8.0' N.A.V.D. 1988
   500 YEAR FLOOD ELEVATION = 9.7' N.A.V.D. 1988
   ELEVATIONS REFERENCED FROM F.E.M.A. FLOOD INSURANCE RATE MAP #36027C0354E, EFFECTIVE DATE MAY 2, 2012.
3. REFER TO FINAL SURVEY MAP FOR BOUNDARY MONUMENT LOCATIONS.

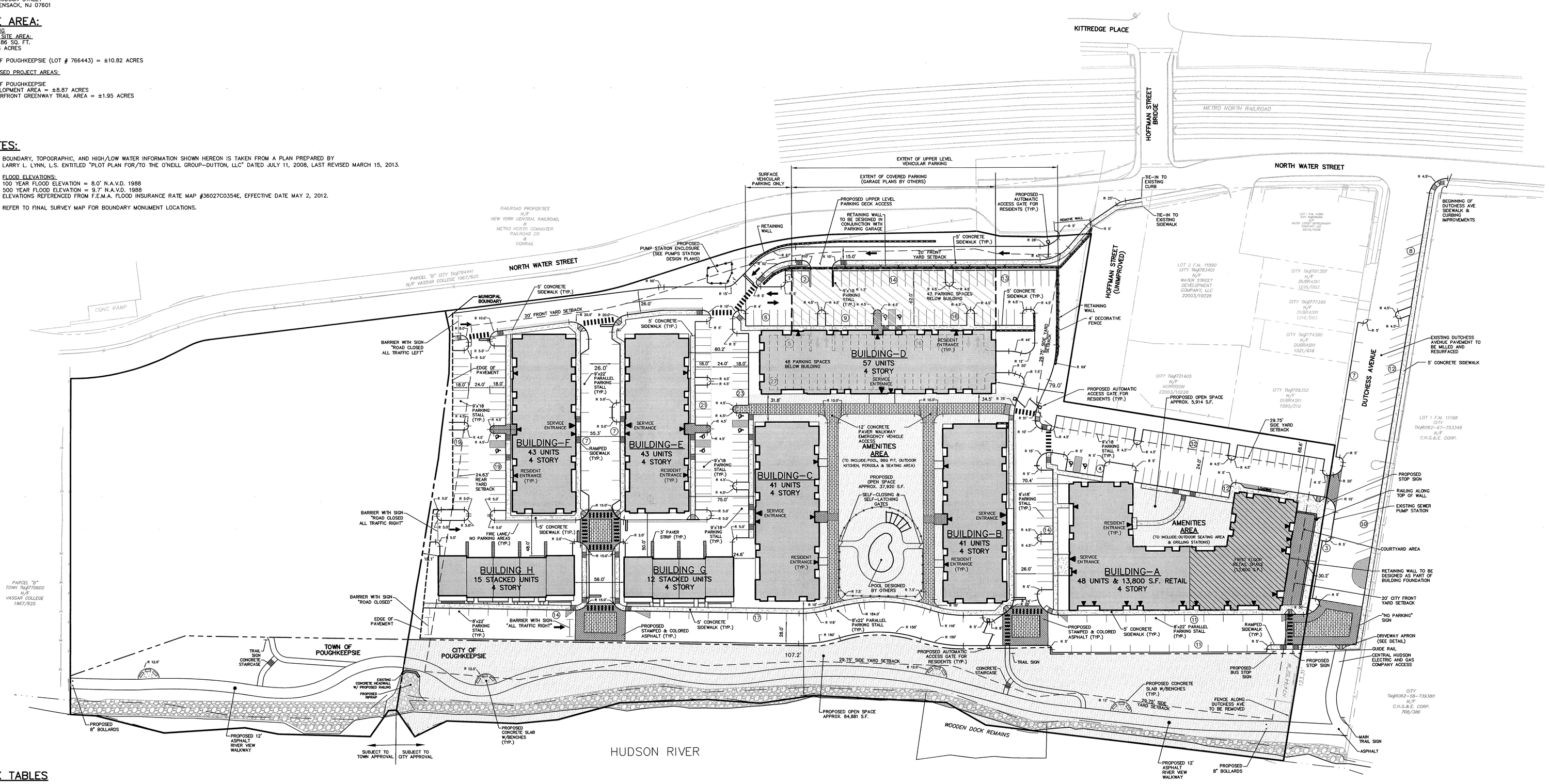

BULK TABLES

CITY OF POUGHKEEPSIE
ZONE: W (WATERFRONT) DISTRICT
PERMITTED USES: RETAIL STORES (SUBJECT TO SITE PLAN APPROVAL BY THE PLANNING BOARD)
SPECIAL PERMIT USE: RESIDENTIAL DEVELOPMENT (SUBJECT TO REQUIREMENTS OF URBAN DENSITY RESIDENCE DISTRICT, R–6)

MINIMUM:	REQUIRED (RESIDENTIAL USE)	PROVIDED	REMARKS
LOT AREA	TOTAL AREA = 320,800 S.F.		
	800 S.F./1 BDRM. UNIT (129 UNITS = 103,200 S.F.)	10.82 ACRES (±471,312 S.F.)	OK
	1,200 S.F./2 BDRM. UNIT (140 UNITS = 168,000 S.F.)		
	1,600 S.F./3 BDRM. UNIT (31 UNITS = 49,600 S.F.)		
LOT FRONTAGE	100 FEET	350 FEET (MEASURED ALONG DUTCHESS AVE.)	OK
LOT WIDTH	100 FEET	348 FEET (MEASURED ALONG DUTCHESS AVE.)	OK
FRONT YARD	20 FEET	30.2 FEET	OK
SIDE YARD	1/2 BLDG. HT. – BLDG. A (27.17 FEET)	68.6 FEET	OK
REAR YARD	1/2 BLDG. HT. – BLDG. H (24.63 FEET)	18.1 FEET	VARIANCE GRANTED 12/16/14
USABLE OPEN SPACE	300 S.F./1 BDRM. UNIT (129 UNITS = 38,700 S.F.)	AMENITY AREAS=43,834 S.F WATERFRONT GREENWAY TRAIL=84,881 S.F. TOTAL= 128,715 S.F.	OK
	400 S.F./2 BDRM. UNIT (140 UNITS = 56,000 S.F.)		
	400 S.F./3 BDRM. UNIT (31 UNITS = 12,400 S.F.)		
	TOTAL AREA = 107,100 S.F.		
BUILDING SEPARATION	2/3 BUILDING HEIGHT OR 25 FEET (WHICHEVER IS GREATER)		BUILDING VARIANCES GRANTED 12/16/14 AS IDENTIFIED BELOW – (3) TOTAL
	BUILDING A: 59' 6" (2/3) = 39.67'	70.4'	OK
	BUILDING B: 54' 4" (2/3) = 36.22'	BLDG B TO D =34.5'	VARIANCE GRANTED 12/16/14
	BUILDING C: 54' 4" (2/3) = 36.22'	BLDG C TO C =24.6'	VARIANCE GRANTED 12/16/14
	BUILDING D: 66' 7" (2/3) = 44.39'	BLDG C TO D =31.8'	VARIANCE GRANTED 12/16/14
	BUILDING E: 54' 7" (2/3) = 36.39'	50.0'	OK
	BUILDING F: 54' 7" (2/3) = 36.39'	48.0'	OK
	BUILDING G: 49' 3" (2/3) = 32.83'	SEE ABOVE (BLDG C TO G)	SEE ABOVE
	BUILDING H: 49' 3" (2/3) = 32.83'	56.0'	OK
MAXIMUM:	PERMITTED		
LOT COVERAGE (BUILDING)	70%	27.0% (127,368 SF)	OK
BUILDING HEIGHT	NONE	66.7' FEET (MID–RISE)	OK
FLOOR AREA RATIO (F.A.R.)	1.25 (568,837 SF)	1.09 (495,614 SF) INCLUDES PARKING GARAGE LEVELS	OK

NOTE: ALL BULK TABLE CALCULATIONS INCLUDE THE PROPOSED PUBLIC PARK LAND.

UNIT COUNT (300 TOTAL)
–27 STACKED UNITS
–273 FLAT UNITS (BLDGS A–F)

REQUIRED PARKING
450 PARKING SPACES
(*1.5 SPACES PER UNIT, PER CITY FINDING STATEMENT)

PROPOSED PARKING SPACES
STACKED SPACES (2/UNIT–1 GARAGE + 1 DRIVEWAY)
27 GARAGE SPACES
27 DRIVEWAY SPACES

231 SURFACE PARKING SPACES
179 GARAGE PARKING SPACES

410 TOTAL ONSITE (CITY) SPACES (1.37 SPACES/UNIT)

40 TOTAL OFFSITE (STREET PARKING) SPACES

PROJECT DEVELOPMENT AREAS

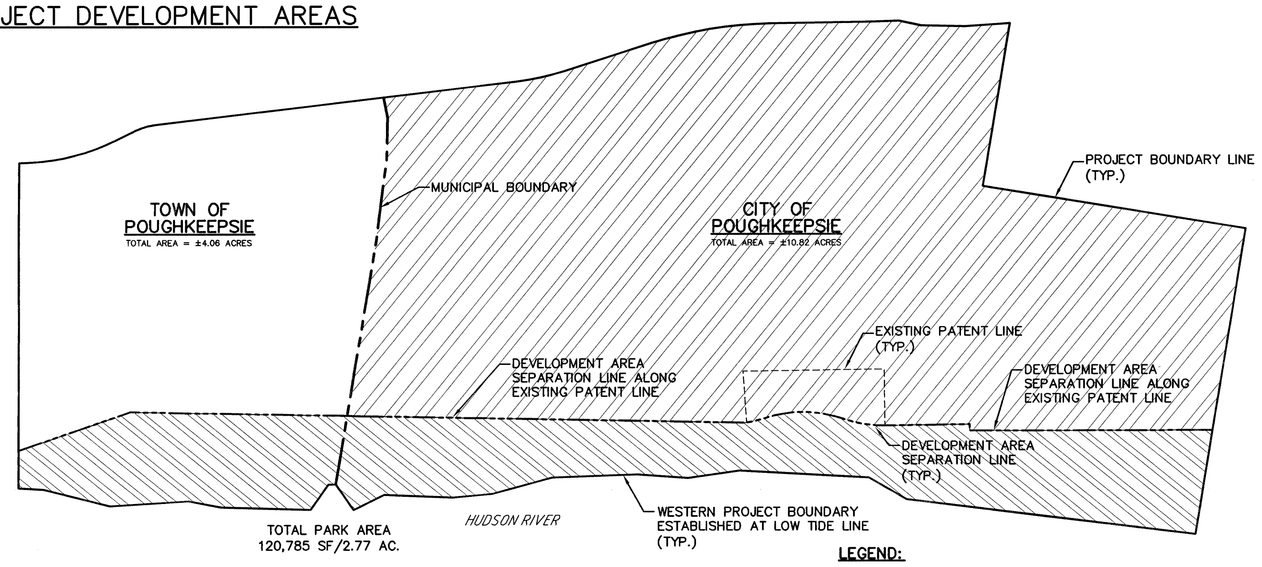

EXISTING
BOUNDARY
SIGN
EDGE OF PAVEMENT
PROPERTY LINE
MUNICIPAL BOUNDARY

PROPOSED
CURBLINE FACE
FIRE LANE/NO PARKING AREAS
RESIDENTIAL ENTRANCE
SERVICE ENTRANCE
RETAINING WALL
STOP SIGN
CONCRETE PAVERS
HANDICAP RAMP
NUMBER OF PARKING SPACES
OPEN SPACE AREAS

DRAWING LEGEND

PLAN NORTH

50 0 50 100
SCALE IN FEET (1"=50')

REV	DATE	DRAWN BY	DESCRIPTION
9	08/27/15	JAP	REVISIONS PER DOH COMMENTS
8	07/10/15	JAP	REVISIONS PER DCDH COMMENTS
7	06/10/15	JJS	REVISIONS PER CITY RESOLUTION & DCHD COMMENTS
6	1/30/15	CMR	REVISIONS PER CITY RESOLUTION
5	10/29/14	JJS	REVISIONS PER CITY/TOWN/CLIENT COMMENTS
4	08/26/14	JJS	REVISIONS TO SITE PLAN PER TOWN COMMENTS
3	06/23/14	AT	REVISIONS TO SITE PLAN PER TOWN/CITY COMMENTS
2	03/18/14	AT	REVISIONS TO SITE PLAN PER CITY COMMENTS
1	01/21/14	AT	ADVANCED PLAN SET FOR PUBLIC HEARING

UNAUTHORIZED ALTERATION TO A MAP BEARING A LICENSED PROFESSIONAL ENGINEER'S SEAL IS A VIOLATION OF SECTION 7209, SUB–DIVISION 2, OF THE NEW YORK STATE EDUCATION LAW. THIS CERTIFICATION IS NOT TO BE CONSTRUED AS AN IMPLIED WARRANTY OR GUARANTEE. IT IS PURELY A STATEMENT OF PROFESSIONAL OPINION BASED ON KNOWLEDGE, INFORMATION AND BELIEF, BASED ON EXISTING FIELD EVIDENCE AND DOCUMENTARY EVIDENCE AVAILABLE. SUCH OPINIONS ARE NOT TRANSFERABLE TO ADJOINERS OR SUBSEQUENT OWNERS.

ANDREW G. FETHERSTON
NEW YORK STATE PROFESSIONAL ENGINEER LIC. NO. 073555

MASER CONSULTING P.A.
Consulting, Municipal & Environmental Engineers
Planners • Surveyors • Landscape Architects
State of N.Y. Certificate of Authorization: 0000172
New Jersey New York Pennsylvania Virginia
Customer Loyalty through Client Satisfaction

COPYRIGHT © 2013, MASER CONSULTING P.A.
ALL RIGHTS RESERVED
THIS DRAWING AND ALL THE INFORMATION CONTAINED HEREIN IS AUTHORIZED FOR USE ONLY BY THE PARTY FOR WHOM THE WORK WAS CONTRACTED OR TO WHOM IT IS CERTIFIED. THIS DRAWING MAY NOT BE COPIED, REUSED, DISCLOSED, DISTRIBUTED OR RELIED UPON FOR ANY OTHER PURPOSE WITHOUT THE EXPRESS WRITTEN CONSENT OF MASER CONSULTING P.A.

NEWBURGH OFFICE
1607 Route 300
Suite 101
Newburgh, NY 12550
Phone: 845.564.4495
Fax: 845.564.0278
email: solutions@maserconsulting.com

ONE DUTCHESS AVENUE
OVERALL SITE PLAN
FOR
THE O'NEILL GROUP-DUTTON, LLC
TAX LOTS 6062-02-763508 & 6062-59-766443
TOWN/CITY OF POUGHKEEPSIE DUTCHESS COUNTY NY

SCALE	DATE	DRAWN BY	CHECKED BY
1"=50'	06/13/13	ADT	ABF

PROJECT NUMBER: 07001417B NB001550

SHEET NUMBER: 2 of 26

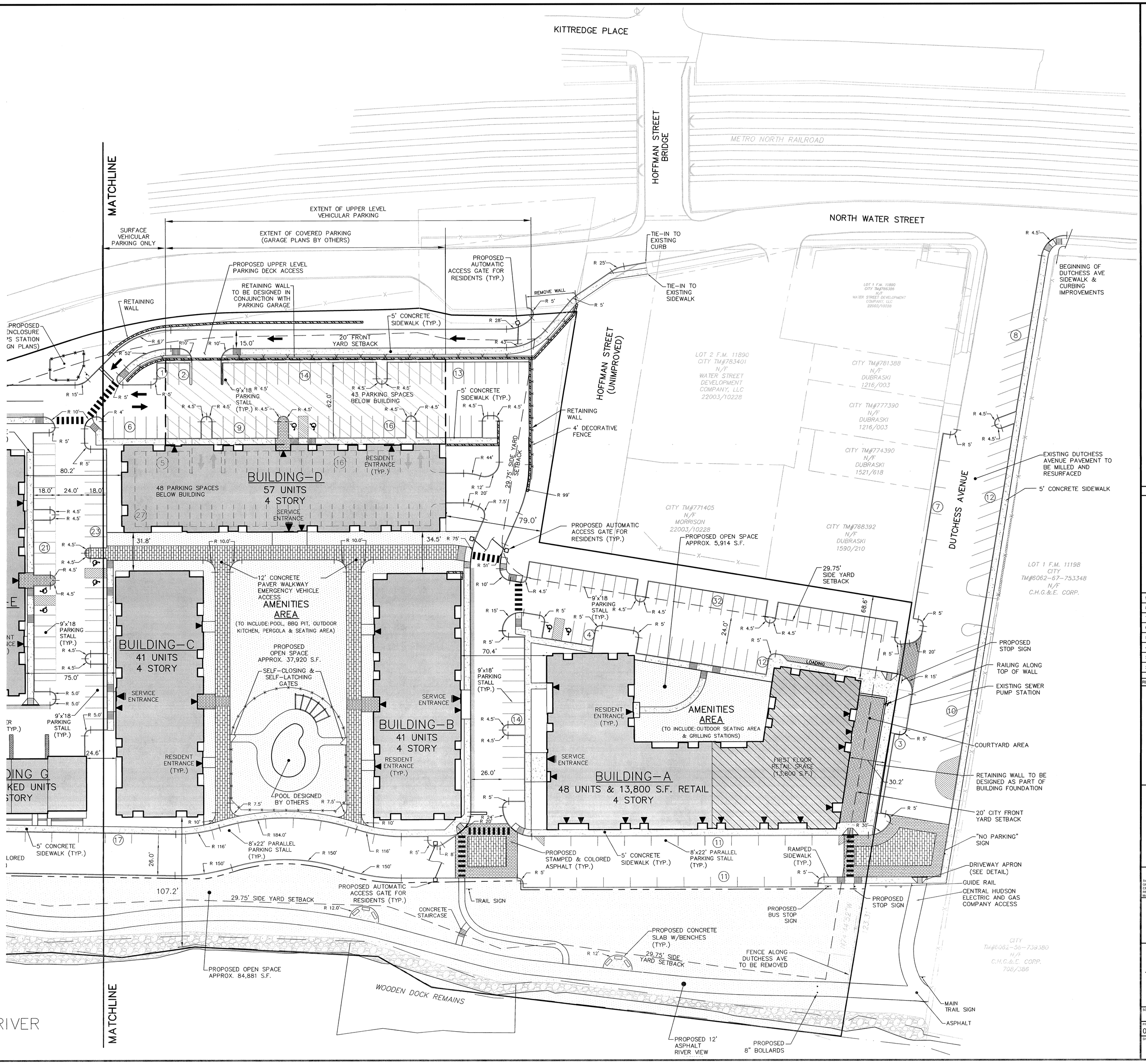

EXISTING

- BOUNDARY
- SIGN
- EDGE OF PAVEMENT
- PROPERTY LINE
- MUNICIPAL BOUNDARY

PROPOSED

- CURBLINE (FACE)
- FIRE LANE/NO PARKING AREAS
- RESIDENTIAL ENTRANCE
- SERVICE ENTRANCE
- RETAINING WALL
- STOP SIGN
- CONCRETE PAVERS
- HANDICAP RAMP
- NUMBER OF PARKING SPACES
- OPEN SPACE AREAS

DRAWING LEGEND

PLAN NORTH

30 0 30 60

SCALE IN FEET (1"=30')

REV	DATE	DRAWN BY	DESCRIPTION
9	08/27/15	JAP	REVISIONS PER DOH COMMENTS
8	07/10/15	JAP	REVISIONS PER DCDH COMMENTS
7	06/10/15	JJS	REVISIONS PER CITY RESOLUTION & DCHD COMMENTS
6	1/30/15	CMR	REVISIONS PER CITY RESOLUTION
5	10/29/14	JJS	REVISIONS PER CITY/TOWN/CLIENT COMMENTS
4	08/26/14	JJS	REVISIONS TO SITE PLAN PER TOWN COMMENTS
3	06/23/14	AT	REVISIONS TO SITE PLAN PER TOWN/CITY COMMENTS
2	03/18/14	AT	REVISIONS TO SITE PLAN PER CITY COMMENTS
1	01/21/14	AT	ADVANCED PLAN SET FOR PUBLIC HEARING

UNAUTHORIZED ALTERATION TO A MAP BEARING A LICENSED PROFESSIONAL ENGINEER'S SEAL IS A VIOLATION OF SECTION 7209, SUB-DIVISION 2, OF THE NEW YORK STATE EDUCATION LAW. THE CERTIFICATION IS NOT AN EXPRESS OR IMPLIED WARRANTY OR GUARANTEE. IT IS PURELY A STATEMENT OF PROFESSIONAL OPINION BASED ON KNOWLEDGE, INFORMATION AND BELIEF, BASED ON EXISTING FIELD CONDITIONS AND DOCUMENTARY EVIDENCE AVAILABLE. SUCH OPINIONS ARE NOT TRANSFERABLE TO ADDITIONAL INSTITUTIONS OR PURCHASERS OF THE PROPERTY.

ANDREW C. FETHERSTON
NEW YORK STATE PROFESSIONAL ENGINEER LIC. NO. 073505

MASER CONSULTING P.A.

Consulting, Municipal & Environmental Engineers
Planners • Surveyors • Landscape Architects
State of N.Y. Certificate of Authorization: 0000172

New Jersey New York Pennsylvania Virginia
Customer Loyalty through Client Satisfaction

COPYRIGHT © 2013, MASER CONSULTING P.A.
ALL RIGHTS RESERVED
THIS DRAWING AND ALL THE INFORMATION CONTAINED HEREIN IS AUTHORIZED FOR USE ONLY BY THE PARTY FOR WHOM THE WORK WAS CONTRACTED OR TO WHOM IT IS CERTIFIED. THIS DRAWING MAY NOT BE COPIED, REUSED, DISCLOSED, DISTRIBUTED OR RELIED UPON FOR ANY OTHER PURPOSE WITHOUT THE EXPRESS WRITTEN CONSENT OF MASER CONSULTING P.A.

NEWBURGH OFFICE
1607 Route 300
Suite 101
Newburgh, NY 12550
Phone: 845.564.4495
Fax: 845.564.0278
email: solutions@maserconsulting.com

ONE DUTCHESS AVENUE

LAYOUT & DIMENSION PLAN

FOR

THE O'NEILL GROUP-DUTTON, LLC

TAX LOTS 6062-02-763508 &
6062-59-766443

TOWN/CITY OF POUGHKEEPSIE DUTCHESS COUNTY NY

SCALE:	DATE:	DRAWN BY:	CHECKED BY:
1"=30'	06/13/13	JJS	ABF

PROJECT NUMBER: 07001417B NB001550

SHEET NUMBER: 3 of 26

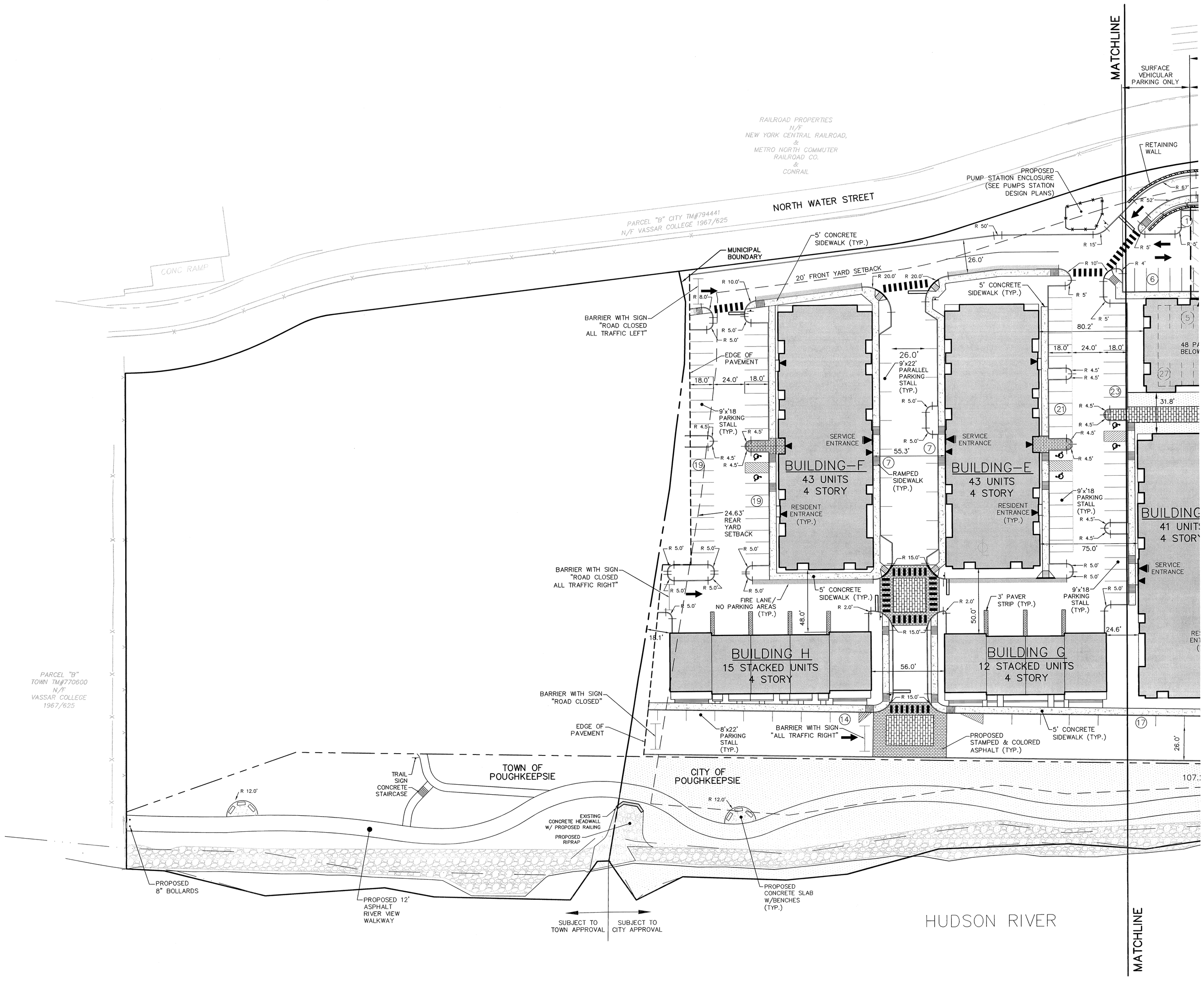

EXISTING

- BOUNDARY
- SIGN
- EDGE OF PAVEMENT
- PROPERTY LINE
- MUNICIPAL BOUNDARY

PROPOSED

- CURBLINE
- FACE
- FIRE LANE/NO PARKING AREAS
- RESIDENTIAL ENTRANCE
- SERVICE ENTRANCE
- RETAINING WALL
- STOP SIGN
- CONCRETE PAVERS
- HANDICAP RAMP
- NUMBER OF PARKING SPACES
- OPEN SPACE AREAS

DRAWING LEGEND

PLAN NORTH

30 0 30 60

SCALE IN FEET (1"=30')

REV	DATE	DRAWN BY	DESCRIPTION
9	08/27/15	JAP	REVISIONS PER DOH COMMENTS
8	07/10/15	JAP	REVISIONS PER DCDH COMMENTS
7	06/10/15	JJS	REVISIONS PER CITY RESOLUTION & DCHD COMMENTS
6	1/30/15	CMR	REVISIONS PER CITY RESOLUTION
5	10/29/14	JJS	REVISIONS PER CITY/TOWN/CLIENT COMMENTS
4	08/26/14	JJS	REVISIONS TO SITE PLAN PER TOWN COMMENTS
3	06/23/14	AT	REVISIONS TO SITE PLAN PER TOWN/CITY COMMENTS
2	03/18/14	AT	REVISIONS TO SITE PLAN PER CITY COMMENTS
1	01/21/14	AT	ADVANCED PLAN SET FOR PUBLIC HEARING

UNAUTHORIZED ALTERATION TO A MAP BEARING A LICENSED PROFESSIONAL ENGINEER'S SEAL IS A VIOLATION OF SECTION 7209, SUB-DIVISION 2, OF THE NEW YORK STATE EDUCATION LAW. THE CERTIFICATION IS NOT AN EXPRESS OR IMPLIED WARRANTY OR GUARANTEE. IT IS PURELY A STATEMENT OF PROFESSIONAL OPINION BASED ON KNOWLEDGE, INFORMATION AND BELIEF, BASED ON EXISTING FIELD EVIDENCE AND DOCUMENTARY EVIDENCE AVAILABLE. CERTIFICATIONS ARE NOT TRANSFERABLE TO OTHER INSTITUTIONS OR SUBSEQUENT OWNERS.

ANDREW B. FETHERSTON
NEW YORK STATE PROFESSIONAL ENGINEER LIC. NO. 073555

MASER CONSULTING P.A.
Consulting, Municipal & Environmental Engineers
Planners • Surveyors • Landscape Architects
State of N.Y. Certificate of Authorization: 0000172
New Jersey New York Pennsylvania Virginia
Customer Loyalty *through* Client Satisfaction

COPYRIGHT © 2013, MASER CONSULTING P.A.
ALL RIGHTS RESERVED
THIS DRAWING AND ALL THE INFORMATION CONTAINED HEREIN IS AUTHORIZED FOR USE ONLY BY THE PARTY FOR WHOM THE WORK WAS CONTRACTED OR TO WHOM IT IS CERTIFIED. THIS DRAWING MAY NOT BE COPIED, REUSED, DISCLOSED, DISTRIBUTED OR RELIED UPON FOR ANY OTHER PURPOSE WITHOUT THE EXPRESS WRITTEN CONSENT OF MASER CONSULTING, P.A.

NEWBURGH OFFICE
1607 Route 300
Suite 101
Newburgh, NY 12550
Phone: 845.564.4495
Fax: 845.564.0278
email: solutions@maserconsulting.com

ONE DUTCHESS AVENUE

LAYOUT & DIMENSION PLAN

FOR

THE O'NEILL GROUP-DUTTON, LLC

TAX LOTS 6062-02-763508 & 6062-59-766443

TOWN/CITY OF POUGHKEEPSIE DUTCHESS COUNTY NY

SCALE	DATE	DRAWN BY	CHECKED BY
1"=30'	06/13/13	JJS	ABF

PROJECT NUMBER: 07001417B NB001550

SHEET NUMBER: 4 of 26

GENERAL SOIL EROSION AND SEDIMENT CONTROL NOTES

1. ALL SOIL EROSION AND SEDIMENT CONTROL PRACTICES ARE TO BE INSTALLED PRIOR TO ANY MAJOR SOIL DISTURBANCE, OR IN THEIR PROPER SEQUENCE, AND MAINTAINED UNTIL PERMANENT PROTECTION IS ESTABLISHED.

2. ANY DISTURBED AREAS THAT WILL BE LEFT EXPOSED MORE THAN SEVEN (7) DAYS FOR DISTURBANCES LESS THAN FIVE (5) ACRES AND FIVE (5) DAYS FOR DISTURBANCES GREATER THAN FIVE (5) ACRES, AND NOT SUBJECT TO CONSTRUCTION TRAFFIC, WILL IMMEDIATELY RECEIVE A TEMPORARY SEEDING. IF THE SEASON PREVENTS THE ESTABLISHMENT OF TEMPORARY COVER, THE DISTURBED AREAS WILL BE MULCHED WITH STRAW, OR EQUIVALENT MATERIAL, AT A RATE OF TWO (2) TONS PER ACRE, ACCORDING TO STATE STANDARDS.

3. PERMANENT VEGETATION TO BE SEEDED OR SODDED ON ALL EXPOSED AREAS WITHIN FIVE (5) DAYS AFTER FINAL GRADING. MULCHING IS REQUIRED ON ALL SEEDING. WHEN HYDROSEEDING, MULCH SHALL NOT BE INCLUDED IN THE TANK WITH THE SEED.

4. ALL WORK TO BE DONE IN ACCORDANCE WITH THE NEW YORK STANDARDS AND SPECIFICATIONS FOR EROSION AND SEDIMENT CONTROL.

5. A SUBBASE COURSE WILL BE APPLIED IMMEDIATELY FOLLOWING ROUGH GRADING AND INSTALLATION OF IMPROVEMENTS TO STABILIZE STREETS, ROADS, DRIVEWAYS, AND PARKING AREAS. IN AREAS WHERE NO UTILITIES ARE PRESENT, THE SUBBASE SHALL BE INSTALLED WITHIN FIVE (5) DAYS OF THE PRELIMINARY GRADING.

6. IMMEDIATELY FOLLOWING INITIAL DISTURBANCE OR ROUGH GRADING, ALL CRITICAL AREAS SUBJECT TO EROSION (I.E. STEEP SLOPES AND ROADWAY EMBANKMENTS) WILL RECEIVE A TEMPORARY SEEDING IN COMBINATION WITH STRAW MULCH OR A SUITABLE EQUIVALENT, AT A RATE OF TWO (2) TONS PER ACRE, ACCORDING TO STATE STANDARDS.

7. ANY STEEP SLOPES RECEIVING PIPELINE INSTALLATION WILL BE BACKFILLED AND STABILIZED DAILY, AS THE INSTALLATION CONTINUES (I.E. SLOPES GREATER THAN 3:1).

8. THE STANDARD FOR STABILIZED CONSTRUCTION ACCESS REQUIRES THE INSTALLATION OF A STONE PAD, AT ALL CONSTRUCTION DRIVEWAYS, IMMEDIATELY AFTER INITIAL SITE DISTURBANCE.

9. IN ACCORDANCE WITH THE STANDARD FOR MANAGEMENT OF HIGH ACID PRODUCING SOILS, ANY SOIL HAVING A PH OF 4 OR LESS OR CONTAINING IRON SULFIDES SHALL BE COVERED WITH A MINIMUM OF TWELVE (12) INCHES OF SOIL HAVING A PH OF 5 OR MORE PRIOR TO SEEDBED PREPARATION. AREAS WHERE TREES OR SHRUBS ARE TO BE PLANTED SHALL BE COVERED WITH A MINIMUM OF TWENTY-FOUR (24) INCHES OF SOIL HAVING A PH OF 5 OR MORE.

10. AT THE TIME THE SITE PREPARATION FOR PERMANENT VEGETATIVE STABILIZATION IS GOING TO BE ACCOMPLISHED, ANY SOIL THAT WILL NOT PROVIDE A SUITABLE ENVIRONMENT TO SUPPORT ADEQUATE VEGETATIVE GROUND COVER, SHALL BE REMOVED OR TREATED IN SUCH A WAY THAT IT WILL PERMANENTLY ADJUST THE SOIL CONDITIONS AND RENDER IT SUITABLE FOR VEGETATIVE GROUND COVER. IF THE REMOVAL OR TREATMENT OF THE SOIL WILL NOT PROVIDE SUITABLE CONDITIONS, NON-VEGETATIVE MEANS OF PERMANENT GROUND STABILIZATION WILL HAVE TO BE EMPLOYED.

11. CONDUIT OUTLET PROTECTION MUST BE REVIEWED & SUPPLEMENTED AT ALL OUTFALLS PRIOR TO THE DRAINAGE SYSTEM BECOMING OPERATIONAL.

12. UNFILTERED DEWATERING IS NOT PERMITTED. TAKE ALL NECESSARY PRECAUTIONS DURING ALL DEWATERING OPERATIONS TO MINIMIZE SEDIMENT TRANSFER. ANY DEWATERING METHODS USED MUST BE IN ACCORDANCE WITH STATE STANDARDS.

13. SHOULD THE CONTROL OF DUST AT THE SITE BE NECESSARY, THE SITE WILL BE SPRINKLED UNTIL THE SURFACE IS WET, TEMPORARY VEGETATIVE COVER SHALL BE ESTABLISHED OR MULCH SHALL BE APPLIED IN ACCORDANCE WITH STATE STANDARDS FOR EROSION CONTROL.

14. ALL SOIL WASHED, DROPPED, SPILLED, OR TRACKED OUTSIDE THE LIMIT OF DISTURBANCE OR ONTO PUBLIC RIGHT-OF-WAY WILL BE REMOVED IMMEDIATELY.

15. THE PROPERTY OWNER SHALL BE RESPONSIBLE FOR ANY EROSION AND SEDIMENTATION THAT MAY OCCUR BELOW STORMWATER OUTFALLS OR OFFSITE AS A RESULT OF CONSTRUCTION OF THE PROJECT.

16. STOCKPILE AND STAGING LOCATIONS DETERMINED IN THE FIELD, SHALL BE PLACED WITHIN THE LIMITS OF DISTURBANCE ACCORDING TO THE CERTIFIED PLAN.

17. CONCRETE WASHOUT, DUMPSTER, & STAGING AREA LOCATIONS SHALL BE DETERMINED BY THE CONTRACTOR AND APPROVED AT THE PRE-CONSTRUCITON MEETING. THEY SHALL BE PLACED IN THE PROXIMITY OF THE CONSTRUCTION ENTRANCE AND STAGING AREAS AND SHALL BE USED PRIOR TO EXITING THE PROJECT SITE. THE LOCATION SHALL BE IN A PRACTICAL, CLEARLY DELINEATED, AREA AND BE MAINTAINED THROUGHOUT CONSTRUCTION.

18. ALL SOIL STOCKPILES ARE TO BE TEMPORARILY STABILIZED IN ACCORDANCE WITH THE NEW YORK STATE STANDARDS AND SPECIFICATIONS FOR SOIL EROSION AND SEDIMENT CONTROL.

19. ALL PERMANENT SOIL EROSION AND SEDIMENT CONTROL MEASURES SHALL BE MAINTAINED BY THE PROPERTY OWNER, AND SHALL BECOME THEIR RESPONSIBILITY.

20. PAVEMENT AREAS ARE TO BE KEPT CLEAN AT ALL TIMES.

21. DURING CONSTRUCTION, ANY ADDITIONAL CONTROL MEASURES AS DEEMED NECESSARY TO PREVENT EROSION OR CONTROL SEDIMENT BEYOND THOSE MEASURES SHOWN ON THE APPROVED PLAN SHALL BE INSTALLED OR EMPLOYED AT THE DIRECTION OF THE MUNICIPAL ENGINEER.

22. ALL TEMPORARY, STRUCTURAL EROSION AND SEDIMENT CONTROL MEASURES CAN BE REMOVED, WHEN ALL CONSTRUCTION ACTIVITY IDENTIFIED IN THE SWPPP HAS BEEN COMPLETED, ALL AREAS OF DISTURBANCE HAVE ACHIEVED FINAL STABILIZATION** AND ALL POST-CONSTRUCTION STORMWATER MANAGEMENT PRACTICES HAVE BEEN CONSTRUCTED IN CONFORMANCE WITH THE SWPPP AND ARE OPERATIONAL.

**FINAL STABILIZATION – MEANS THAT ALL SOIL DISTURBANCE ACTIVITIES HAVE CEASED AND A UNIFORM, PERENNIAL VEGETATIVE COVER WITH A DENSITY OF EIGHTY (80) PERCENT OVER THE ENTIRE PERVIOUS SURFACE HAS BEEN ESTABLISHED; OR OTHER EQUIVALENT STABILIZATION MEASURES, SUCH AS PERMANENT LANDSCAPE MULCHES, ROCK RIP-RAP OR WASHED/CRUSHED STONE HAVE BEEN APPLIED ON ALL DISTURBED AREAS THAT ARE NOT COVERED BY PERMANENT STRUCTURES, CONCRETE OR PAVEMENT

MAINTENANCE PLAN DURING CONSTRUCTION:

INSPECTION AND MAINTENANCE SHALL BE PERFORMED IN CONFORMANCE WITH GP-0-10-001. ALL EROSION AND SEDIMENT CONTROL PRACTICES WILL BE CHECKED FOR STABILITY AND OPERATION FOLLOWING EVERY RUNOFF-PRODUCING RAINFALL BUT IN NO CASE LESS THAN ONCE EVERY WEEK. ANY NEEDED REPAIRS WILL BE MADE IMMEDIATELY TO MAINTAIN ALL PRACTICES AS DESIGNED AND INSTALLED FOR THE PROJECT. THE SEDIMENT TRAPS WILL BE CLEANED OUT WHEN THE LEVEL OF SEDIMENT REACHES 25% OF ITS' CAPACITY. SEDIMENT WILL BE REMOVED FROM BEHIND THE SILT FENCE WHEN IT BECOMES ABOUT 0.5 FT DEEP AT THE FENCE. THE SEDIMENT FENCE WILL BE REPAIRED AS NECESSARY TO MAINTAIN A BARRIER. ALL SEEDED AREAS WILL BE FERTILIZED, RESEEDED AS NECESSARY, AND MULCHED ACCORDING TO SPECIFICATIONS IN THE LANDSCAPE PLAN TO MAINTAIN A VIGOROUS, DENSE VEGETATIVE COVER.

NOTE: DURING THE CONSTRUCTION OF A PHASE, EACH SUBSEQUENT PHASE WILL HAVE BEEN CAPPED AND STABILIZED WITH DENSE GRASS COVER.

MAINTENANCE AGREEMENT NOTE:

THE OWNER/APPLICANT SHALL ENTER INTO AN ENFORCEABLE MAINTENANCE AGREEMENT WITH THE MUNICIPALITY RELATED TO MAINTENANCE OF STORMWATER FACILITIES. THE OWNER/APPLICANT IS RESPONSIBLE TO PERFORM ALL REQUIRED MAINTENANCE BOTH DURING CONSTRUCTION AND LONG-TERM. THE NATURE OF THE AGREEMENT IS TO ALLOW THE MUNICIPALITY TO PERFORM MAINTENANCE AT THEIR OPTION SHOULD THE OWNER/APPLICANT FAIL TO ADEQUATELY MAINTAIN THE SYSTEM AS DETERMINED BY THE MUNICIPAL ENGINEER. MAINTENANCE OF THE STORMWATER SYSTEM SHALL BE PERFORMED IN ACCORDANCE WITH THE APPROVED SWPPP AND DETAIL SHEETS.

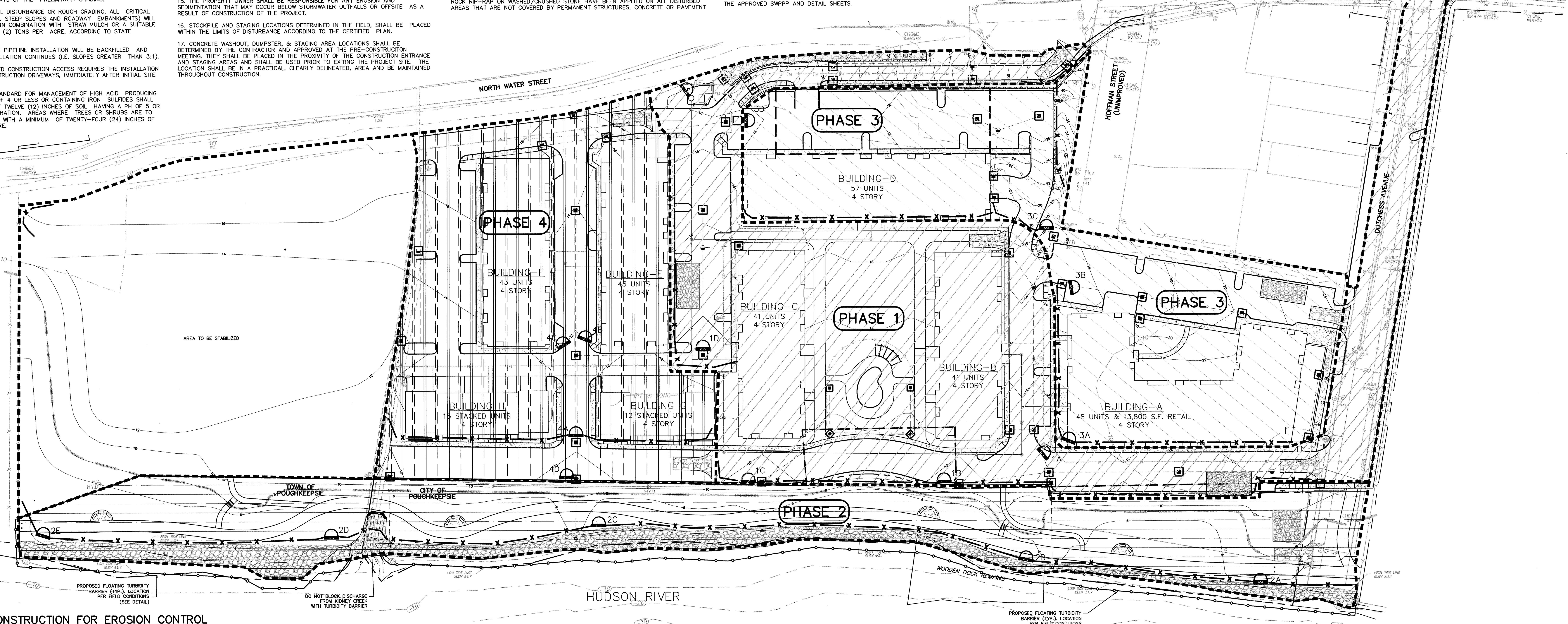

SEQUENCE OF CONSTRUCTION FOR EROSION CONTROL

*NOTE: BROWNFIELD CAPPING OPERATIONS TO RAISE ENTIRE PROJECT SITE TO SUBGRADE AND BE STABILIZED PRIOR TO LAND DEVELOPMENT PROJECT SHOWN WITHIN THESE SITE PLANS.

THIS EROSION CONTROL PHASING PLAN ALLOWS INITIAL CONSTRUCTION OF BUILDING PAD SITES FOR BUILDINGS B, C, AND D. THE GOAL OF THIS PHASING PLAN IS TO LIMIT THE AMOUNT OF SOIL EXPOSED AT ANY ONE GIVEN TIME TO BE UNDER 5 ACRES PER THE PERMIT REQUIREMENTS. ONCE THE CONCRETE PAD SITES FOR THESE BUILDINGS ARE SET, THIS PHASING PLAN ALLOWS CONSTRUCTION OF UTILITIES AS SHOWN. ON COMPLETION OF THE UTILITY INSTALLATIONS, CONSTRUCTION OF THE ROADS MAY COMMENCE. VERTICAL CONSTRUCTION OF BUILDINGS B, C AND D MAY COMMENCE ON THESE PADS WHILE CONSTRUCTION OF THE GREENWAY TRAIL IS INITIATED. THE GOAL OF THIS PHASING PLAN IS TO ALLOW THE UTMOST FLEXIBILITY WHILE LIMITING THE AMOUNT OF EXPOSED SOIL.

PHASE 1

(BUILDINGS B AND C, PARKING, UTILITIES, CONSTRUCTION ENTRANCE OFF NORTH WATER STREET, AND RESURFACING DUTCHESS AVENUE)

PHASE DISTURBANCE AREA = 4.08 ACRES

1. THE APPLICANT AND THE APPLICANT'S CONTRACTOR ARE REQUIRED TO ATTEND A PRECONSTRUCTION MEETING WITH REPRESENTATIVES FROM THE CITY BUILDING DEPARTMENT, FIRE DEPARTMENT, HIGHWAY DEPARTMENT, THE ATTORNEY, AND THE MUNICIPAL ENGINEER TO REVIEW ALL PROTOCOLS, BONDING REQUIREMENTS, AGREEMENTS AND THE SEQUENCE AND SCHEDULING OF THE WORK BEING UNDERTAKEN, AS APPLICABLE.
2. CONSTRUCT AND MAINTAIN THE CONSTRUCTION ENTRANCE AND STAGING AREAS AS SHOWN WITHIN THIS PHASE AS SHOWN ON THE PLANS, USING CRUSHED STONE IN KIND WITH CONSTRUCTION ENTRANCE BEDDING AS SHOWN ON THE DETAIL.
3. CONTRACTOR SHALL INSTALL FIVE (5) TEMPORARY SEDIMENT TRAPS AND SILT FENCE WITHIN THIS PHASE AS SHOWN ON THE EROSION AND SEDIMENT CONTROL PLAN. CONTRACTOR TO CONSTRUCT TEMPORARY SWALES AS NEEDED TO DIRECT RUNOFF TOWARDS SEDIMENT TRAPS.
4. THE CONTRACTOR SHALL ROUGH GRADE WITHIN THIS PHASE, INCLUDING PROPOSED ROADS, PARKING AREAS, BUILDINGS AND THE SITE ENTRANCE OFF NORTH WATER STREET. ADDITIONALLY, CONSTRUCTION OF THE PROPOSED RETAINING WALL NEAR NORTH WATER STREET IS TO BE COMPLETED AS PART OF THIS PHASE.
5. CONTRACTOR SHALL INSTALL PROPOSED UTILITIES INCLUDING STORM SEWER, CATCH BASINS, CDS SYSTEMS, WATERMAINS, HYDRANTS, SANITARY SEWER, PROPOSED SANITARY PUMP STATION AND FORCEMAIN WITHIN THIS PHASE.
6. CONTRACTOR SHALL INSTALL STORM INLET SEDIMENT TRAPS ON ALL DRAINAGE STRUCTURES IN THIS PHASE.
7. CONTRACTOR SHALL THEN PAVE (BASE COURSE) ROADWAY/PARKING LOTS IN THIS PHASE.
8. ONCE THE ABOVE EROSION AND SEDIMENT CONTROL DEVICE ARE INSTALLED, CONTRACTOR TO BEGIN CONSTRUCTION ON PROPOSED BUILDINGS B AND C.
9. AFTER COMPLETION OF BUILDINGS B AND C EXTERIOR, GRADE AND SPREAD TOPSOIL ON ALL LAWN AREAS AND SEED. CONTRACTOR SHALL CLEAR DRAINAGE PIPES AND STRUCTURES OF ANY SEDIMENT WHICH MAY HAVE ACCUMULATED.
10. MAINTAIN ALL SEEDED AND PLANTED AREAS TO INSURE A VIABLE STABILIZED VEGETATIVE COVER.
11. STABILIZATION* – THE OPERATOR SHALL INITIATE STABILIZATION MEASURES AS SOON AS PRACTICABLE IN PORTIONS OF THE SITE WHERE CONSTRUCTION ACTIVITIES HAVE TEMPORARILY OR PERMANENTLY CEASED, BUT IN NO CASE MORE THAN SEVEN (7) DAYS AFTER THE CONSTRUCTION ACTIVITY IN THAT PORTION OF THE SITE HAS TEMPORARILY OR PERMANENTLY CEASED.
   - STABILIZATION MEANS COVERING OR MAINTAINING A COVER OVER SOIL. COVER CAN BE VEGETATIVE (E.G. GRASS, SEED AND MULCH, SHRUBS, OR TURF) OR NON-VEGETATIVE (E.G. GEOTEXTILES, RIP-RAP, OR GABIONS) PER SPDES GENERAL PERMIT FOR STORMWATER RUNOFF FROM CONSTRUCTION ACTIVITY, GP-0-10-001 OR AS AMENDED.
12. ADDITIONAL EROSION CONTROL MEASURES SHALL BE INSTALLED, AS MAY BE NECESSARY, REQUIRED AND/OR REQUESTED BY AUTHORITIES, TO PREVENT THE INCIDENTAL DISCHARGE OF SILT LADEN RUNOFF FROM ENTERING A WATER COURSE OR A DRAINAGE SYSTEM.
13. THE GENERAL PERMIT FOR STORMWATER DISCHARGES FROM CONSTRUCTION ACTIVITIES STATES THAT IT IS UNLAWFUL FOR ANY PERSON TO CAUSE OR CONTRIBUTE TO A VIOLATION OF WATER QUALITY STANDARDS.
14. PHASE 1 MUST BE STABILIZED PRIOR TO REMOVING ALL EROSION AND SEDIMENT CONTROL DEVICES AND PROGRESSING TO NEXT PHASE. LITTER AND CONSTRUCTION DEBRIS SHALL BE REMOVED AS PRACTICABLE PRIOR TO BEGINNING NEXT PHASE.

PHASE 2

(WATERFRONT GREENWAY TRAIL)

WATERFRONT GREENWAY TRAIL MUST BE CONSTRUCTED BEFORE ISSUANCE OF THE 84TH CERTIFICATE OF OCCUPANCY

PHASE DISTURBANCE AREA = 2.77 ACRES

1. CONSTRUCT AND MAINTAIN THE CONSTRUCTION ENTRANCES AND STAGING AREAS AS SHOWN WITHIN THIS PHASE ON THE PLANS.
2. CONTRACTOR SHALL INSTALL FIVE (5) TEMPORARY SEDIMENT TRAPS AND SILT FENCE WITHIN THIS PHASE AS SHOWN ON THE EROSION AND SEDIMENT CONTROL PLAN. CONTRACTOR TO CONSTRUCT TEMPORARY SWALES AS NEEDED TO DIRECT RUNOFF TOWARDS SEDIMENT TRAPS.
3. CONTRACTOR SHALL THEN GRADE THE PROPOSED WATERFRONT GREENWAY TRAIL AND CONSTRUCT PROPOSED IMPROVEMENTS.
4. CONSTRUCT AND MAINTAIN THE CONSTRUCTION ENTRANCES AS SHOWN IN THIS PHASE ON THE PLAN. CONTRACTOR SHALL INSTALL TURBIDITY BARRIER AS SHOWN ON THE EROSION AND SEDIMENT CONTROL PLAN FOR THE CONSTRUCTION OF THE SHORE PROTECTION. TURBIDITY CURTAIN TO BE INSTALLED IN AREAS BEING WORKED ON AND TO BE DETERMINED BY CONTRACTOR IN MAXIMUM LENGTHS OF NO MORE THAN 200 LF SECTIONS.
5. CONTRACTOR SHALL INSTALL SLOPE PROTECTION ALONG HUDSON RIVER AS SHOWN ON THE PLANS AND DETAILS. CONTRACTOR SHALL PROVIDE A MEANS AND METHODS PROCEDURE FOR THE PROJECT ENGINEER TO REVIEW AND APPROVE PRIOR TO INITIATING CONSTRUCTION ACTIVITY.
6. REMAINING CDS UNIT DISCHARGE PIPES (CDS-1, 2 & 3) SHALL BE CONSTRUCTED AND UPSTREAM STUBS PLUGGED FOR CONNECTION TO CDS UNITS INCLUDED IN FUTURE PHASES. TRENCHES SHALL BE BACKFILLED AND SEEDED IN CONJUNCTION WITH EARTHWORK, TOP SOILING, AND SEEDING OF ALL LAWN AREAS WITHIN THE PHASING LIMITS.
7. MAINTAIN ALL SEEDED AND PLANTED AREAS TO INSURE A VIABLE STABILIZED VEGETATIVE COVER.
8. STABILIZATION* – THE OPERATOR SHALL INITIATE STABILIZATION MEASURES AS SOON AS PRACTICABLE IN PORTIONS OF THE SITE WHERE CONSTRUCTION ACTIVITIES HAVE TEMPORARILY OR PERMANENTLY CEASED, BUT IN NO CASE MORE THAN SEVEN (7) DAYS AFTER THE CONSTRUCTION ACTIVITY IN THAT PORTION OF THE SITE HAS TEMPORARILY OR PERMANENTLY CEASED.
   - STABILIZATION MEANS COVERING OR MAINTAINING A COVER OVER SOIL. COVER CAN BE VEGETATIVE (E.G. GRASS, SEED AND MULCH, SHRUBS, OR TURF) OR NON-VEGETATIVE (E.G. GEOTEXTILES, RIP-RAP, OR GABIONS) PER SPDES GENERAL PERMIT FOR STORMWATER RUNOFF FROM CONSTRUCTION ACTIVITY, GP-0-10-001 OR AS AMENDED.
9. ADDITIONAL EROSION CONTROL MEASURES SHALL BE INSTALLED, AS MAY BE NECESSARY, REQUIRED AND/OR REQUESTED BY AUTHORITIES, TO PREVENT THE INCIDENTAL DISCHARGE OF SILT LADEN RUNOFF FROM ENTERING A WATER COURSE OR A DRAINAGE SYSTEM.
10. THE GENERAL PERMIT FOR STORMWATER DISCHARGES FROM CONSTRUCTION ACTIVITIES STATES THAT IT IS UNLAWFUL FOR ANY PERSON TO CAUSE OR CONTRIBUTE TO A VIOLATION OF WATER QUALITY STANDARDS.
11. PHASE 2 MUST BE STABILIZED PRIOR TO REMOVING ALL EROSION AND SEDIMENT CONTROL DEVICES AND PROGRESSING TO NEXT PHASE. LITTER AND CONSTRUCTION DEBRIS SHALL BE REMOVED AS PRACTICABLE PRIOR TO BEGINNING NEXT PHASE.

PHASE 3

(BUILDINGS A AND D, ASSOCIATED PARKING, PARKING DECK AND UTILITIES)

PHASE DISTURBANCE AREA = 2.69 ACRES

1. CONSTRUCT AND MAINTAIN THE CONSTRUCTION ENTRANCES AND STAGING AREAS AS SHOWN IN THIS PHASE ON THE EROSION AND SEDIMENT CONTROL PLAN.
2. CONTRACTOR SHALL INSTALL FOUR (4) TEMPORARY SEDIMENT TRAPS AND SILT FENCE WITHIN THIS PHASE AS SHOWN ON THE EROSION AND SEDIMENT CONTROL PLAN. CONTRACTOR TO CONSTRUCT TEMPORARY SWALES AS NEEDED TO DIRECT RUNOFF TOWARDS SEDIMENT TRAPS.
3. THE CONTRACTOR SHALL ROUGH GRADE WITHIN THIS PHASE, INCLUDING PROPOSED ROADS, PARKING AREAS, AND BUILDINGS.
4. CONTRACTOR SHALL INSTALL PROPOSED UTILITIES INCLUDING STORM SEWER, CATCH BASINS, WATERMAIN, HYDRANTS, AND SANITARY SEWER WITHIN THIS PHASE.
5. CONTRACTOR SHALL INSTALL STORM INLET SEDIMENT TRAPS ON ALL DRAINAGE STRUCTURES IN THIS PHASE.
6. CONTRACTOR SHALL THEN PAVE (BASE COURSE) ROADWAY/PARKING LOTS IN THIS PHASE.
7. ONCE THE ABOVE EROSION AND SEDIMENT CONTROL DEVICES ARE INSTALLED, CONTRACTOR TO BEGIN CONSTRUCTION ON PROPOSED BUILDING A, D AND ASSOCIATED PARKING DECK.
8. AFTER COMPLETION OF BUILDING EXTERIORS, GRADE AND SPREAD TOPSOIL ON ALL LAWN AREAS AND SEED. CONTRACTOR SHALL CLEAR DRAINAGE PIPES AND STRUCTURES OF ANY SEDIMENT WHICH MAY HAVE ACCUMULATED.
9. MAINTAIN ALL SEEDED AND PLANTED AREAS TO INSURE A VIABLE STABILIZED VEGETATIVE COVER.
10. STABILIZATION* – THE OPERATOR SHALL INITIATE STABILIZATION MEASURES AS SOON AS PRACTICABLE IN PORTIONS OF THE SITE WHERE CONSTRUCTION ACTIVITIES HAVE TEMPORARILY OR PERMANENTLY CEASED, BUT IN NO CASE MORE THAN SEVEN (7) DAYS AFTER THE CONSTRUCTION ACTIVITY IN THAT PORTION OF THE SITE HAS TEMPORARILY OR PERMANENTLY CEASED.
    - STABILIZATION MEANS COVERING OR MAINTAINING A COVER OVER SOIL. COVER CAN BE VEGETATIVE (E.G. GRASS, SEED AND MULCH, SHRUBS, OR TURF) OR NON-VEGETATIVE (E.G. GEOTEXTILES, RIP-RAP, OR GABIONS) PER SPDES GENERAL PERMIT FOR STORMWATER RUNOFF FROM CONSTRUCTION ACTIVITY, GP-0-10-001 OR AS AMENDED.
1. ADDITIONAL EROSION CONTROL MEASURES SHALL BE INSTALLED, AS MAY BE NECESSARY, REQUIRED AND/OR REQUESTED BY AUTHORITIES, TO PREVENT THE INCIDENTAL DISCHARGE OF SILT LADEN RUNOFF FROM ENTERING A WATER COURSE OR A DRAINAGE SYSTEM.
11. THE GENERAL PERMIT FOR STORMWATER DISCHARGES FROM CONSTRUCTION ACTIVITIES STATES THAT IT IS UNLAWFUL FOR ANY PERSON TO CAUSE OR CONTRIBUTE TO A VIOLATION OF WATER QUALITY STANDARDS.
12. PHASE 3 MUST BE STABILIZED PRIOR TO REMOVING ALL EROSION AND SEDIMENT CONTROL DEVICES AND PROGRESSING TO NEXT PHASE. LITTER AND CONSTRUCTION DEBRIS SHALL BE REMOVED AS PRACTICABLE PRIOR TO BEGINNING NEXT PHASE.

PHASE 4

(BUILDINGS E, F, G, AND H, PARKING, UTILITIES)

PHASE DISTURBANCE AREA = 2.75 ACRES

1. CONSTRUCT AND MAINTAIN THE CONSTRUCTION ENTRANCES AS SHOWN IN THIS PHASE ON THE EROSION AND SEDIMENT CONTROL PLAN.
2. CONTRACTOR SHALL INSTALL THREE (3) TEMPORARY SEDIMENT TRAPS AND SILT FENCE WITHIN THIS PHASE AS SHOWN ON THE EROSION AND SEDIMENT CONTROL PLAN. CONTRACTOR TO CONSTRUCT TEMPORARY SWALES AS NEEDED TO DIRECT RUNOFF TOWARDS SEDIMENT TRAPS.
3. THE CONTRACTOR SHALL ROUGH GRADE WITHIN THIS PHASE, INCLUDING PROPOSED ROADS, PARKING AREAS, AND BUILDINGS.
4. CONTRACTOR SHALL INSTALL PROPOSED UTILITIES INCLUDING STORM SEWER, CATCH BASINS, CDS SYSTEMS, WATERMAIN, HYDRANTS, AND SANITARY SEWER WITHIN THIS PHASE.
5. CONTRACTOR SHALL INSTALL STORM INLET SEDIMENT TRAPS ON ALL DRAINAGE STRUCTURES IN THIS PHASE.
6. CONTRACTOR SHALL THEN PAVE (BASE COURSE) ROADWAY/PARKING LOTS IN THIS PHASE.
7. ONCE THE ABOVE EROSION AND SEDIMENT CONTROL DEVICES ARE INSTALLED, CONTRACTOR TO BEGIN CONSTRUCTION ON PROPOSED STACKED UNITS WITHIN THE CITY, BUILDING E AND F.
8. AFTER COMPLETION OF BUILDING EXTERIORS, GRADE AND SPREAD TOPSOIL ON ALL LAWN AREAS AND SEED. CONTRACTOR SHALL CLEAR DRAINAGE PIPES AND STRUCTURES OF ANY SEDIMENT WHICH MAY HAVE ACCUMULATED.
9. MAINTAIN ALL SEEDED AND PLANTED AREAS TO INSURE A VIABLE STABILIZED VEGETATIVE COVER.
10. STABILIZATION* – THE OPERATOR SHALL INITIATE STABILIZATION MEASURES AS SOON AS PRACTICABLE IN PORTIONS OF THE SITE WHERE CONSTRUCTION ACTIVITIES HAVE TEMPORARILY OR PERMANENTLY CEASED, BUT IN NO CASE MORE THAN SEVEN (7) DAYS AFTER THE CONSTRUCTION ACTIVITY IN THAT PORTION OF THE SITE HAS TEMPORARILY OR PERMANENTLY CEASED.
    - STABILIZATION MEANS COVERING OR MAINTAINING A COVER OVER SOIL. COVER CAN BE VEGETATIVE (E.G. GRASS, SEED AND MULCH, SHRUBS, OR TURF) OR NON-VEGETATIVE (E.G. GEOTEXTILES, RIP-RAP, OR GABIONS) PER SPDES GENERAL PERMIT FOR STORMWATER RUNOFF FROM CONSTRUCTION ACTIVITY, GP-0-10-001 OR AS AMENDED.
11. ADDITIONAL EROSION CONTROL MEASURES SHALL BE INSTALLED, AS MAY BE REQUIRED AND REQUESTED BY AUTHORITIES, TO PREVENT THE INCIDENTAL DISCHARGE OF SILT LADEN RUNOFF FROM ENTERING A WATER COURSE OR A DRAINAGE SYSTEM.
12. THE GENERAL PERMIT FOR STORMWATER DISCHARGES FROM CONSTRUCTION ACTIVITIES STATES THAT IT IS UNLAWFUL FOR ANY PERSON TO CAUSE OR CONTRIBUTE TO A VIOLATION OF WATER QUALITY STANDARDS.
13. PHASE 5 MUST BE STABILIZED PRIOR TO REMOVING ALL EROSION AND SEDIMENT CONTROL DEVICES.

SEDIMENT TRAP SIZING

OVERALL PHASE CRITERIA

PHASE	DISTURBED AREA (AC)	STORAGE (CF) REQUIRED	STORAGE (CF) PROVIDED
1	3.408	12,270	13,004
2	2.774	9,986	11,112
3	2.690	9,684	10,328
4	2.748	9,893	10,304

* DOES NOT INCLUDE RESURFACING OF DUTCHESS AVE.

SIZING CRITERIA BASED ON PLAN SEDIMENT TRAP PLACEMENT

PHASE	SUB AREA	DISTURBED AREA (AC)	DEPTH (FT)	LENGTH (FT)	WIDTH (FT)	STORAGE (CF) REQUIRED	STORAGE (CF) PROVIDED
1	A	0.640	4.0	30.0	20.0	2,303	2,400
	B	0.878	4.0	32.0	25.0	3,162	3,200
	C	0.948	4.0	38.0	22.5	3,412	3,420
	D	0.717	4.0	30.0	22.0	2,583	2,640
	E	0.224	4.0	24.0	14.0	807	1,344
2	A	0.607	4.0	30.0	19.0	2,184	2,280
	B	0.551	4.0	25.0	20.0	1,984	2,000
	C	0.680	4.0	40.0	16.0	2,449	2,560
	D	0.608	4.0	30.0	20.0	2,189	2,400
	E	0.504	4.0	26.0	18.0	1,814	1,872
3	A	0.818	4.0	32.0	24.0	2,945	3,072
	B	0.676	4.0	34.0	18.0	2,433	2,448
	C	0.735	4.0	34.0	20.0	2,644	2,720
	D	0.561	4.0	29.0	18.0	2,020	2,088
4	A	0.942	4.0	36.0	24.0	3,392	3,456
	B	0.751	4.0	30.0	24.0	2,704	2,880
	C	0.747	4.0	34.0	20.0	2,689	2,720
	D	0.334	4.0	26.0	12.0	1,204	1,248

THIS PLAN IS FOR EROSION CONTROL PURPOSES ONLY.

LEGEND FOR EROSION CONTROL DURING CONSTRUCTION

- SILT FENCE
- STORM INLET SEDIMENT TRAP
- STAGING AREA
- EQUIPMENT TRAVEL PATH
- STABILIZED CONSTRUCTION ENTRANCE
- PHASING BORDER
- FLOATING TURBIDITY BARRIER
- STONE OUTLET SEDIMENT TRAP

DRAWING LEGEND

PLAN NORTH

SCALE IN FEET (1"=50')

REV	DATE	DRAWN BY	DESCRIPTION
9	08/27/15	JAP	REVISIONS PER DOH COMMENTS
8	07/10/15	JAP	REVISIONS PER DCDH COMMENTS
7	06/10/15	JJS	REVISIONS PER CITY RESOLUTION & DCHD COMMENTS
6	1/30/15	CMR	REVISIONS PER CITY RESOLUTION
5	10/29/14	JJS	REVISIONS PER CITY/TOWN/CLIENT COMMENTS
4	08/26/14	JJS	REVISIONS TO SITE PLAN PER TOWN COMMENTS
3	06/23/14	AT	REVISIONS TO SITE PLAN PER TOWN/CITY COMMENTS
2	03/18/14	AT	REVISIONS TO SITE PLAN PER CITY COMMENTS
1	01/21/14	AT	ADVANCED PLAN SET FOR PUBLIC HEARING

UNAUTHORIZED ALTERATION TO A MAP BEARING A LICENSED PROFESSIONAL ENGINEER'S SEAL IS A VIOLATION OF SECTION 7209, SUB-DIVISION 2, OF THE NEW YORK STATE EDUCATION LAW. THE CERTIFICATION IS NOT AN EXPRESS OR IMPLIED WARRANTY OR GUARANTEE. IT IS PURELY A STATEMENT OF PROFESSIONAL OPINION BASED ON KNOWLEDGE, INFORMATION AND BELIEF, BASED ON EXISTING FIELD EVIDENCE AND DOCUMENTARY EVIDENCE AVAILABLE. CERTIFICATIONS ARE NOT TRANSFERABLE TO ADDITIONAL INSTITUTIONS OR SUBSEQUENT OWNERS.

ANDREW FETHERSTON
NEW YORK STATE PROFESSIONAL ENGINEER LIC. NO. 073555

MASER CONSULTING P.A.
Consulting, Municipal & Environmental Engineers
Planners • Surveyors • Landscape Architects
State of N.Y. Certificate of Authorization: 0000172
New Jersey New York Pennsylvania Virginia
Customer Loyalty *through* Client Satisfaction

COPYRIGHT © 2013, MASER CONSULTING P.A.
ALL RIGHTS RESERVED

THIS DRAWING AND ALL THE INFORMATION CONTAINED HEREIN IS AUTHORIZED FOR USE ONLY BY THE PARTY FOR WHOM THE WORK WAS CONTRACTED OR TO WHOM IT IS CERTIFIED. THIS DRAWING MAY NOT BE COPIED, REUSED, DISCLOSED, DISTRIBUTED OR RELIED UPON FOR ANY OTHER PURPOSE WITHOUT THE EXPRESS WRITTEN CONSENT OF MASER CONSULTING, P.A.

NEWBURGH OFFICE
1607 Route 300
Suite 101
Newburgh, NY 12550
Phone: 845.564.4495
Fax: 845.564.0278
email: solutions@maserconsulting.com

ONE DUTCHESS AVENUE
EROSION AND SEDIMENT CONTROL PLAN
FOR
THE O'NEILL GROUP-DUTTON, LLC
TAX LOTS 6062-02-763508 &
6062-59-766443
TOWN/CITY OF POUGHKEEPSIE DUTCHESS COUNTY NY

SCALE:	DATE:	DRAWN BY:	CHECKED BY:
1"=50'	06/13/13	JJS	ABF

PROJECT NUMBER: 07001417B NB001553

SHEET NUMBER: 11 of 26

Engineers
Planners
Surveyors
Landscape Architects
Environmental Scientists

SITE PLANT SCHEDULE

KEY	QTY.	BOTANICAL NAME	COMMON NAME	HEIGHT	CALIPER	SPREAD	ROOT	REMARKS
SHADE TREES								
ARDG	13	ACER RUBRUM 'OCTOBER GLORY'	RED MAPLE		2 - 2 1/2"		B & B	STRAIGHT LEADER/SYM. BRANCHING
CBF	5	CARPINUS BETULUS 'FRANS FONTAINE'	COLUMNAR HORNBEAM		2 - 2 1/2"		B & B	STRAIGHT LEADER/SYM. BRANCHING
GTIS	12	GLEDITSIA TRICANTHOS INERMIS 'SHADEMASTER'	SHADEMASTER THORNLESS HONEYLOCUST		2 - 2 1/2"		B & B	STRAIGHT LEADER/SYM. BRANCHING
PXA	11	PLATANUS X ACERIFOLIA	LONDON PLANE TREE		2 - 2 1/2"		B & B	STRAIGHT LEADER/SYM. BRANCHING
ZSGV	4	ZELKOVA SERRATA 'GREEN VASE'	GREEN VASE JAPANESE ZELKOVA		2 - 2 1/2"		B & B	STRAIGHT LEADER/SYM. BRANCHING
ORNAMENTAL TREES								
AC	16	AMELANCHIER CANADENSIS	SHADBLOW SERVICEBERRY		1 3/4 - 2"		B & B	CLUMP/FULL HEAD
BN	16	BETULA NIGRA	RIVER BIRCH	7' - 8'			B & B	CLUMP/FULL HEAD
CC	13	CERCIS CANADENSIS	EASTERN REDBUD	5' - 6'			B & B	SINGLE LEADER/FULL HEAD
CV	15	CRATAEGUS VIRIDIS 'WINTER KING'	'WINTER KING' HAWTHORNE	7' - 8'			B & B	SINGLE LEADER/FULL HEAD
EVERGREEN TREES								
PA	12	PICEA ABIES	NORWAY SPRUCE	6 - 7'			B & B	TYPICAL SPECIES HABIT
PS	15	PINUS STROBUS	WHITE PINE	6 - 7'			B & B	TYPICAL SPECIES HABIT
SHRUBS								
ADV	87	AZALEA 'DELAWARE VALLEY WHITE'	WHITE 'DELAWARE VALLEY AZALEA	30"-36"			CONT.	TYPICAL SPECIES HABIT
CAH	26	CLETHRA ALNIFOLIA 'HUMMINGBIRD'	SUMMERSWEET	18 - 24"			CONT.	TYPICAL SPECIES HABIT
IG	48	ILEX GLABRA 'COMPACTA'	INKBERRY	24" - 30"			CONT.	TYPICAL SPECIES HABIT
IVH	67	ITEA VIRGINICA 'HENRY'S GARNET'	'HENRY'S GARNET' SWEETSPIRE			24"-30"	CONT.	TYPICAL SPECIES HABIT
JCSG	40	JUNIPERUS CHINENSIS 'SEA GREEN'	SEA GREEN JUNIPER			30"-36"	CONT.	TYPICAL SPECIES HABIT
JH	79	JUNIPERUS HORIZONTALIS 'BAR HARBOR'	BAR HARBOR JUNIPER	30" - 36"			CONT.	TYPICAL SPECIES HABIT
JF	12	JUNIPERUS X PFITZERIANA 'GLAUCA'	'BLUE PFITZER' JUNIPER	30" - 36"			CONT.	TYPICAL SPECIES HABIT
PMP	4	PINUS MUGO PUMILIO	DWARF MUGO PINE			24"-30"	CONT.	TYPICAL SPECIES HABIT
SBAW	41	SPIRAEA X BUMALDA 'ANTHONY WATERER'	ANTHONY WATERER SPIREA	18 - 24"			CONT.	TYPICAL SPECIES HABIT
PERENNIALS								
PAH	204	PENNISETUM ALOPECUROIDES 'HAMELIN'	'HAMELIN' DWARF FOUNTAIN GRASS				1 GAL. CONT.	TYPICAL SPECIES HABIT
RFG	47	RUDBECKIA FULGIDA 'GOLDSTRUM'	BLACK-EYED SUSAN				1 GAL. CONT.	TYPICAL SPECIES HABIT
EPFS	47	ECHINACEA PURPUREA 'PRAIRIE SPLENDOR'	PRAIRIE SPLENDOR CONEFLOWER				1 GAL. CONT.	TYPICAL SPECIES HABIT

WATERFRONT GREENWAY TRAIL PLANT SCHEDULE

KEY	QTY.	BOTANICAL NAME	COMMON NAME	HEIGHT	CALIPER	SPREAD	ROOT	REMARKS
TREES								
AR	10	ACER RUBRUM	RED MAPLE		2 - 2 1/2"		B & B	STRAIGHT LEADER/SYM. BRANCHING
AMA	36	AMELANCHIER ARBOREA	SERVICEBERRY	5' - 6'			B & B	CLUMP/FULL HEAD
BN	27	BETULA NIGRA	RIVER BIRCH	6' - 8'			B & B	CLUMP/FULL HEAD
CC	18	CERCIS CANADENSIS	EASTERN REDBUD	6' - 8'			B & B	CLUMP/FULL HEAD
CO	7	CELTIS OCCIDENTALIS	HACKBERRY		2 - 2 1/2"		B & B	STRAIGHT LEADER/SYM. BRANCHING
NS	15	NYSSA SYLVATICA	BLACK TUPELO		2 - 2 1/2"		B & B	STRAIGHT LEADER/SYM. BRANCHING
PO	9	PLATANUS OCCIDENTALIS	AMERICAN SYCAMORE		2 - 2 1/2"		B & B	STRAIGHT LEADER/SYM. BRANCHING
QR	12	QUERCUS RUBRA	NORTHERN RED OAK				B & B	STRAIGHT LEADER/SYM. BRANCHING
EVERGREEN TREES								
PG	23	PICEA GLAUCA	WHITE SPRUCE	6 - 7'			B & B	TYPICAL SPECIES HABIT
PS	16	PINUS STROBUS	WHITE PINE	6 - 7'			B & B	TYPICAL SPECIES HABIT
SHRUBS								
AA	79	ARONIA ARBUTIFOLIA	RED CHOKEBERRY	18" - 24"			CONT.	TYPICAL SPECIES HABIT
CF	82	COMPTONIA PEREGRINA	SWEET FERN	18" - 24"			CONT.	TYPICAL SPECIES HABIT
CR	15	CORNUS RACEMOSA	GRAY DOGWOOD	24" - 30"			CONT.	TYPICAL SPECIES HABIT
HQ	117	HYDRANGEA QUERCIFOLIA	OAKLEAF HYDRANGEA	24" - 30"			CONT.	TYPICAL SPECIES HABIT
HV	47	HAMAMELIS VIRGINIANA	WITCHHAZEL	30" - 36"			CONT.	TYPICAL SPECIES HABIT
IG	132	ILEX GLABRA	INKBERRY	24" - 30"			CONT.	TYPICAL SPECIES HABIT
IT	83	ITEA VIRGINICA	VIRGINIA SWEET SPIRE	18" - 24"			CONT.	TYPICAL SPECIES HABIT
IV	90	ILEX VERTICILLATA	WINTERBERRY	18" - 24"			CONT.	TYPICAL SPECIES HABIT
LF	142	LEUCOTHOE FONTANETIANA	DROOPING LEUCOTHOE	24" - 30"			CONT.	TYPICAL SPECIES HABIT
VD	76	VIBURNUM DENTATUM	ARROWWOOD VIBURNUM	24" - 30"			CONT.	TYPICAL SPECIES HABIT

PLAN NOTE

1. THESE PLANS ARE TO BE USED FOR LANDSCAPE PURPOSES ONLY. REFER TO SHEET 21 FOR GENERAL NOTES AND LANDSCAPE AND LIGHTING DETAILS.

LANDSCAPE NOTES

1. LOCATIONS OF ALL PLANT MATERIAL AND PLANTING BED OUTLINES IS APPROXIMATE AND MAY VARY DUE TO THE LOCATIONS OF SITE IMPROVEMENTS AND/OR BUILDINGS.
2. FINAL LOCATION OF ALL PLANT MATERIAL AND PLANTING BED OUTLINES SHALL BE DETERMINED IN THE FIELD UNDER THE DIRECTION OF THE LANDSCAPE ARCHITECT.
3. ALL AREAS WITHIN THE PLANTING BED LIMITS SHALL BE MULCHED WITH 3" OF RED BARN GRAVEL.
4. LAWN AREAS AROUND BUILDINGS SHALL BE STABILIZED WITH SOD. ALL OTHER LAWN AREAS SHALL BE STABILIZED WITH SEED.
5. ANY PROPOSED IRRIGATION DESIGN AND/OR SYSTEM WILL BE DETERMINED IN THE FIELD BY THE IRRIGATION CONTRACTOR.
6. ALL PLANT MATERIAL SHALL CONFORM TO GUIDELINES AS SET FORTH IN THE LATEST EDITION OF THE AMERICAN ASSOCIATION OF NURSERYMEN'S STANDARD FOR NURSERY STOCK.
7. NO SUBSTITUTIONS OF PLANT MATERIALS SHALL BE MADE WITHOUT WRITTEN CONSENT FROM THE MUNICIPAL LANDSCAPE CONSULTANT.

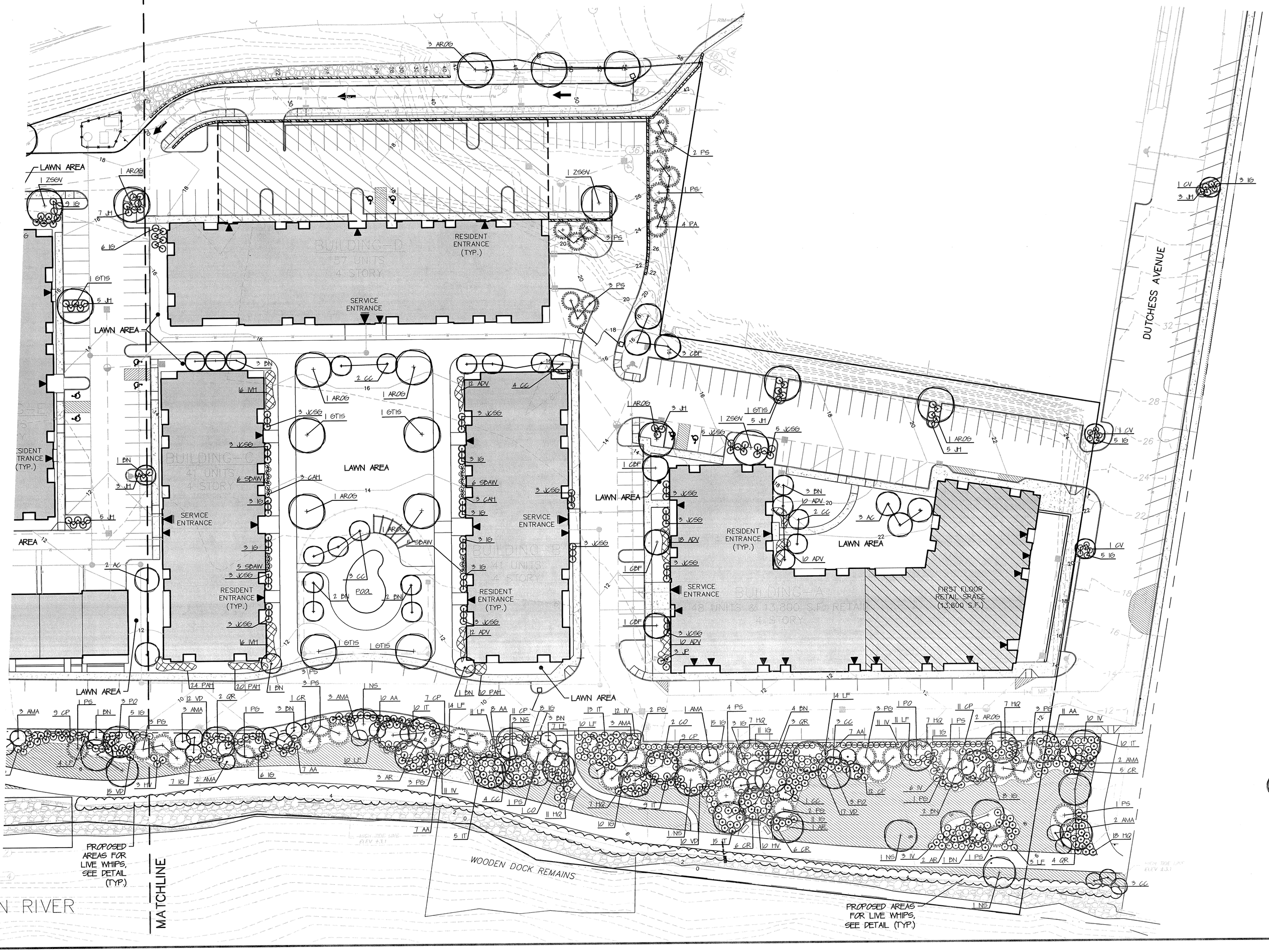

LANDSCAPE LEGEND

- PROPOSED SHADE/STREET TREE
- PROPOSED ORNAMENTAL TREE
- PROPOSED EVERGREEN TREE
- PROPOSED SHRUB
- PROPOSED PERENNIAL MASSES
- OUTLINE OF CONTINUOUS RED BARN GRAVEL FOR ALL BEDS
- FLOOD PLAIN SEED MIXTURE

*SEE SHEET #13 FOR TYPICAL STACKED UNIT LANDSCAPING PLAN

DRAWING LEGEND

PLAN NORTH

SCALE IN FEET (1"=30')

REV	DATE	DRAWN BY	DESCRIPTION
9	08/27/15	JAP	REVISIONS PER DOH COMMENTS
8	07/10/15	JAP	REVISIONS PER DCDH COMMENTS
7	06/10/15	JJS	REVISIONS PER CITY RESOLUTION & DCHD COMMENTS
6	1/30/15	CMR	REVISIONS PER CITY RESOLUTION
5	10/29/14	JJS	REVISIONS PER CITY/TOWN/CLIENT COMMENTS
4	08/26/14	JJS	REVISIONS TO SITE PLAN PER TOWN COMMENTS
3	06/23/14	AT	REVISIONS TO SITE PLAN PER TOWN/CITY COMMENTS
2	03/18/14	AT	REVISIONS TO SITE PLAN PER CITY COMMENTS
1	01/21/14	AT	ADVANCED PLAN SET FOR PUBLIC HEARING

UNAUTHORIZED ALTERATION TO A MAP BEARING A LICENSED PROFESSIONAL ENGINEER'S SEAL IS A VIOLATION OF SECTION 7209, SUBDIVISION 2, OF THE NEW YORK STATE EDUCATION LAW. THE CERTIFICATION IS NOT AN EXPRESS OR IMPLIED WARRANTY OR GUARANTEE. IT IS PURELY A STATEMENT OF PROFESSIONAL OPINION BASED ON KNOWLEDGE, INFORMATION AND BELIEF, BASED ON EXISTING FIELD EVIDENCE AND DOCUMENTARY EVIDENCE AVAILABLE. THIS CERTIFICATION IS NOT TRANSFERRABLE TO ADDITIONAL INSTITUTIONS OR SUBSEQUENT OWNERS.

ANDREW P. LEE-THERSTON
NEW YORK STATE PROFESSIONAL ENGINEER LIC. NO. 073555

MASER CONSULTING P.A.
Consulting, Municipal & Environmental Engineers
Planners • Surveyors • Landscape Architects
State of N.Y. Certificate of Authorization: 0000172
New Jersey New York Pennsylvania Virginia
Customer Loyalty through Client Satisfaction

COPYRIGHT © 2013, MASER CONSULTING P.A.
ALL RIGHTS RESERVED
THIS DRAWING AND ALL THE INFORMATION CONTAINED HEREIN IS AUTHORIZED FOR USE ONLY BY THE PARTY FOR WHOM THE WORK WAS CONTRACTED OR TO WHOM IT IS CERTIFIED. THIS DRAWING MAY NOT BE COPIED, REUSED, DISCLOSED, DISTRIBUTED OR RELIED UPON FOR ANY OTHER PURPOSE WITHOUT THE EXPRESS WRITTEN CONSENT OF MASER CONSULTING, P.A.

NEWBURGH OFFICE
1607 Route 300
Suite 101
Newburgh, NY 12550
Phone: 845.564.4495
Fax: 845.564.0278
email: solutions@maserconsulting.com

ONE DUTCHESS AVENUE

LANDSCAPE PLAN

FOR

THE O'NEILL GROUP-DUTTON, LLC

TAX LOTS 6062-02-763508 & 6062-59-766443

TOWN/CITY OF POUGHKEEPSIE DUTCHESS COUNTY NY

SCALE	DATE	DRAWN BY	CHECKED BY
1"=30'	06/13/13	AT	JED

PROJECT NUMBER 07001417B NB001561

SHEET NUMBER 12 of 26

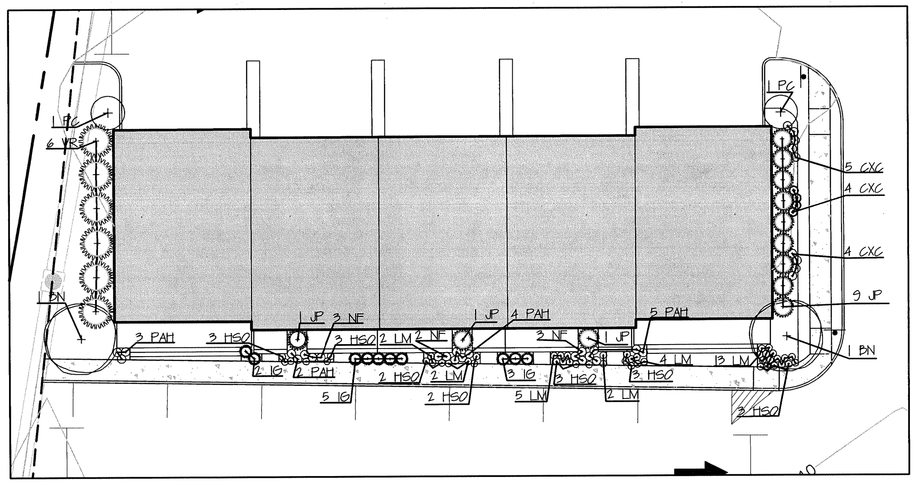

TYPICAL STACKED BUILDING PLANTING PLAN

20 0 20 40

SCALE IN FEET
(1"=20')

TYPICAL STACKED BUILDING PLANTING SCHEDULE

KEY	QTY.	BOTANICAL NAME	COMMON NAME	HEIGHT	CALIPER	SPREAD	ROOT	REMARKS
ORNAMENTAL TREES								
BN	2	BETULA NEGRA	RIVER BIRCH		7' - 8'		B & B	STRAIGHT LEADER/SYM. BRANCHING
PC	2	PRUNUS CISTENA	PURPLELEAF SAND CHERRY		5' - 6'		B & B	STRAIGHT LEADER/SYM. BRANCHING
SHRUBS								
JP	12	JUNIPERUS X PFITZERIANA 'GLAUCA'	'BLUE PFITZER' JUNIPER	30" - 36"			CONT.	TYPICAL SPECIES HABIT
IG	6	ILEX GLABRA	INKBERRY	24" - 30"			CONT.	TYPICAL SPECIES HABIT
VR	6	VIBURNUM RHYTIDOPHYLLOIDES 'ALLEGHANY'	ARROWWOOD VIBURNUM	30" - 36"			CONT.	TYPICAL SPECIES HABIT
PERENNIALS								
CXC	9	CARYOPTERIS X CLANDANDONENSIS	BLUE SPIREA				1 GAL. CONT.	CLUMPS
HSO	19	HEMEROCALLIS 'STELLA de ORO'	STELLA de ORO DAYLILY				1 GAL. CONT.	CLUMPS
LM	33	LIRIOPE MUSCARI 'BIG BLUE'	'BIG BLUE' CREEPING LILY TURF				1 GAL. CONT.	CLUMPS
NF	9	NEPETA FASSENNII	CATMINT				1 GAL. CONT.	CLUMPS
PAH	3	PENNISETUM ALOPECUROIDES 'HAMELN'	HAMELN'S FOUNTAIN GRASS				1 GAL. CONT.	CLUMPS

PLAN NOTE

1. THESE PLANS ARE TO BE USED FOR LANDSCAPE PURPOSES ONLY. REFER TO SHEET 21 FOR GENERAL NOTES AND LANDSCAPE AND LIGHTING DETAILS.

LANDSCAPE NOTES

1. LOCATIONS OF ALL PLANT MATERIAL AND PLANTING BED OUTLINES IS APPROXIMATE. AND MAY VARY DUE TO THE LOCATIONS OF SITE IMPROVEMENTS AND/OR BUILDINGS.
2. FINAL LOCATION OF ALL PLANT MATERIAL AND PLANTING BED OUTLINES SHALL BE DETERMINED IN THE FIELD UNDER THE DIRECTION OF THE LANDSCAPE ARCHITECT.
3. ALL AREAS WITHIN THE PLANTING BED LIMITS SHALL BE MULCHED WITH 3" OF RED BARN GRAVEL.
4. LAWN AREAS AROUND BUILDINGS SHALL BE STABILIZED WITH SOD. ALL OTHER LAWN AREAS SHALL BE STABILIZED WITH SEED.
5. ANY PROPOSED IRRIGATION DESIGN AND/OR SYSTEM WILL BE DETERMINED IN THE FIELD BY THE IRRIGATION CONTRACTOR.
6. ALL PLANT MATERIAL SHALL CONFORM TO GUIDELINES AS SET FORTH IN THE LATEST EDITION OF THE AMERICAN ASSOCIATION OF NURSERYMEN'S STANDARD FOR NURSERY STOCK.
7. NO SUBSTITUTIONS OF PLANT MATERIALS SHALL BE MADE WITHOUT WRITTEN CONSENT FROM THE MUNICIPAL LANDSCAPE CONSULTANT.

LANDSCAPE LEGEND

- PROPOSED SHADE/STREET TREE
- PROPOSED ORNAMENTAL TREE
- PROPOSED EVERGREEN TREE
- PROPOSED SHRUB
- PROPOSED PERENNIAL MASSES
- OUTLINE OF CONTINUOUS RED BARN GRAVEL FOR ALL BEDS
- FLOOD PLAIN SEED MIXTURE

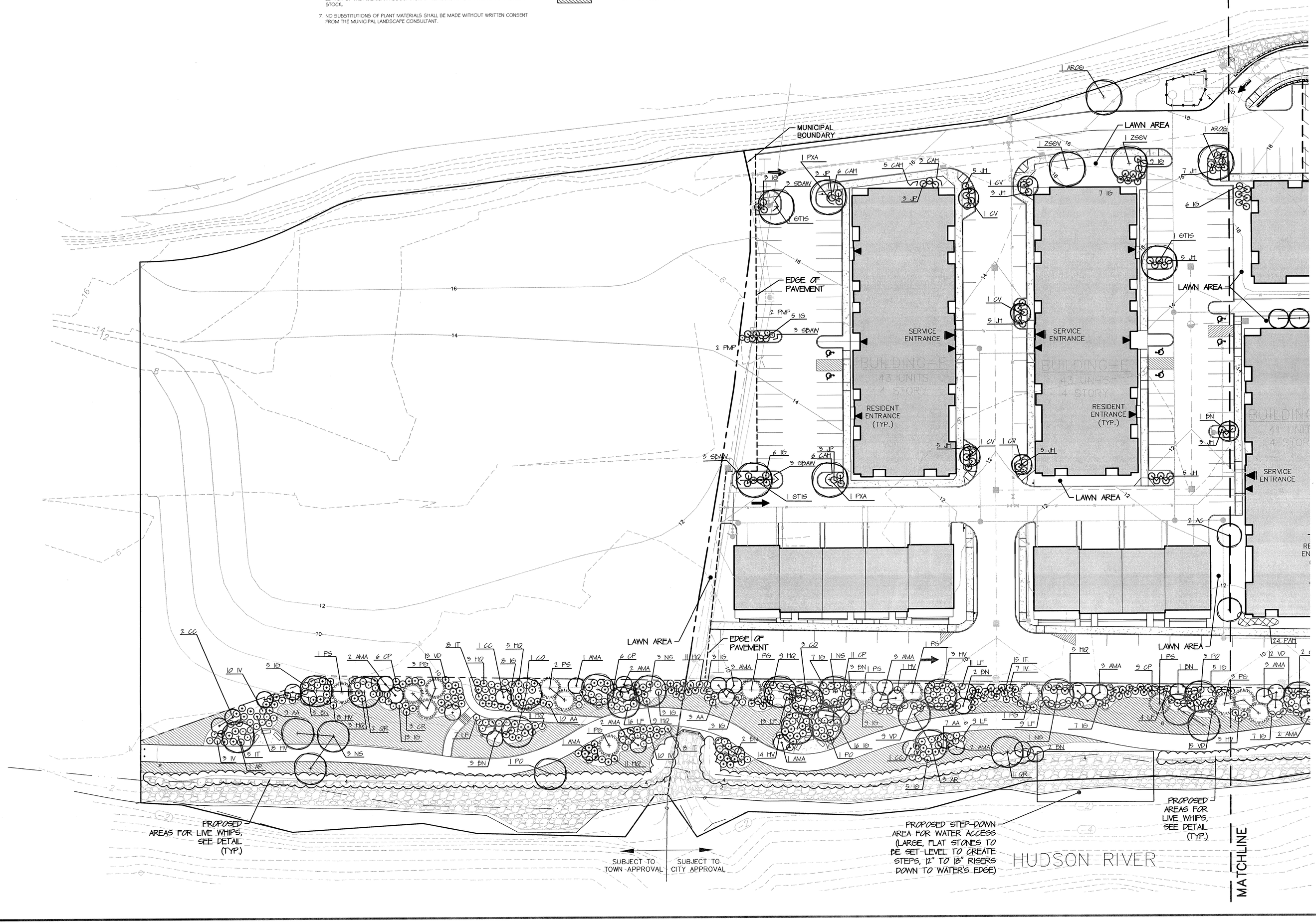

DRAWING LEGEND

PLAN NORTH

80 0 80 160

SCALE IN FEET
(1"=80')

REV	DATE	DRAWN BY	DESCRIPTION
9	08/27/15	JAP	REVISIONS PER DOH COMMENTS
8	07/10/15	JAP	REVISIONS PER DCDH COMMENTS
7	06/10/15	JJS	REVISIONS PER CITY RESOLUTION & DCHD COMMENTS
6	1/30/15	CMR	REVISIONS PER CITY RESOLUTION
5	10/29/14	JJS	REVISIONS PER CITY/TOWN/CLIENT COMMENTS
4	08/26/14	JJS	REVISIONS TO SITE PLAN PER TOWN COMMENTS
3	06/23/14	AT	REVISIONS TO SITE PLAN PER TOWN/CITY COMMENTS
2	03/18/14	AT	REVISIONS TO SITE PLAN PER CITY COMMENTS
1	01/21/14	AT	ADVANCED PLAN SET FOR PUBLIC HEARING

UNAUTHORIZED ALTERATION TO A MAP BEARING A LICENSED PROFESSIONAL ENGINEER'S SEAL IS A VIOLATION OF SECTION 7209, SUB-DIVISION 2 OF THE NEW YORK STATE EDUCATION LAW. THE CERTIFICATION IS NOT AN EXPRESS OR IMPLIED WARRANTY OR GUARANTEE, IT IS PURELY A STATEMENT OF PROFESSIONAL OPINION BASED ON KNOWLEDGE, INFORMATION AND BELIEF, BASED ON EXISTING FIELD EVIDENCE AND INFORMATION AVAILABLE AT THE TIME OF SURVEY. THIS CERTIFICATION IS NOT TRANSFERABLE TO ADDITIONAL INSTITUTIONS OR SUBSEQUENT OWNERS.

ANDREW B. FETHERSTON
NEW YORK STATE PROFESSIONAL
ENGINEER LIC. NO. 073555

MASER CONSULTING P.A.
Consulting, Municipal & Environmental Engineers
Planners • Surveyors • Landscape Architects
State of N.Y. Certificate of Authorization: 0000172

New Jersey New York Pennsylvania Virginia
Customer Loyalty *through* Client Satisfaction

COPYRIGHT © 2013, MASER CONSULTING P.A.
ALL RIGHTS RESERVED

THIS DRAWING AND ALL THE INFORMATION CONTAINED HEREIN IS AUTHORIZED FOR USE ONLY BY THE PARTY FOR WHOM THE WORK WAS CONTRACTED OR TO WHOM IT IS CERTIFIED. THIS DRAWING MAY NOT BE COPIED, REUSED, DISCLOSED, DISTRIBUTED OR RELIED UPON FOR ANY OTHER PURPOSE WITHOUT THE EXPRESS WRITTEN CONSENT OF MASER CONSULTING P.A.

NEWBURGH OFFICE
1607 Route 300
Suite 101
Newburgh, NY 12550
Phone: 845.564.4495
Fax: 845.564.0278
email: solutions@maserconsulting.com

ONE DUTCHESS AVENUE

LANDSCAPE PLAN

FOR

THE O'NEILL GROUP-DUTTON, LLC

TAX LOTS 6062-02-763508 &
6062-59-766443

TOWN/CITY OF POUGHKEEPSIE DUTCHESS COUNTY NY

SCALE:	DATE:	DRAWN BY:	CHECKED BY:
1"=30'	06/13/13	AT	JED

PROJECT NUMBER: 07001417B NB001561

SHEET NUMBER: 13 of 26

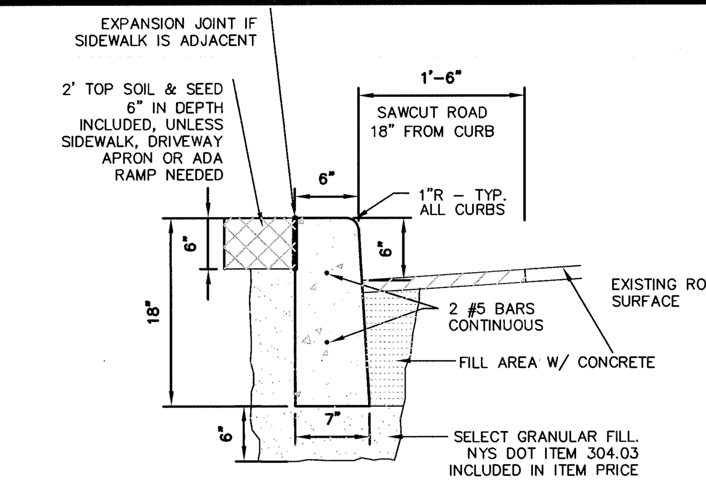

NOTES:
1. CONCRETE TO BE 4000 PSI AIR-ENTRAINED PORTLAND CEMENT CONCRETE
2. SIX (6") INCH FACE TO BE PROVIDED
3. PROVIDE PRE FORMED BITUMINOUS FIBER EXPANSION JOINTS, 1/2" THICK AT 20'-0" (MAX.) INTERVALS. PROVIDE DUMMY JOINTS (FORMED) MIDWAY BETWEEN EXPANSION JOINTS.

CONCRETE CURBING FOR DUTCHESS AVE.
N.T.S.

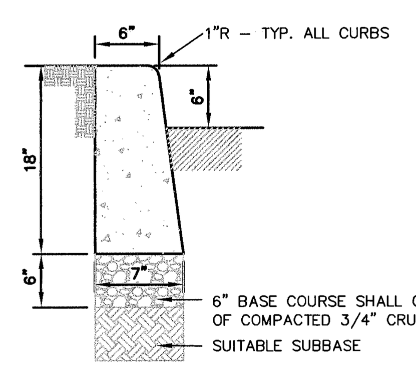

NOTES:
1. CONCRETE TO BE 4000 PSI AIR-ENTRAINED PORTLAND CEMENT CONCRETE
2. SIX (6") INCH FACE TO BE PROVIDED
3. PROVIDE PRE FORMED BITUMINOUS FIBER EXPANSION JOINTS, 1/2" THICK AT 20'-0" (MAX.) INTERVALS. PROVIDE DUMMY JOINTS (FORMED) MIDWAY BETWEEN EXPANSION JOINTS.

CONCRETE CURBING FOR ON-SITE
N.T.S.

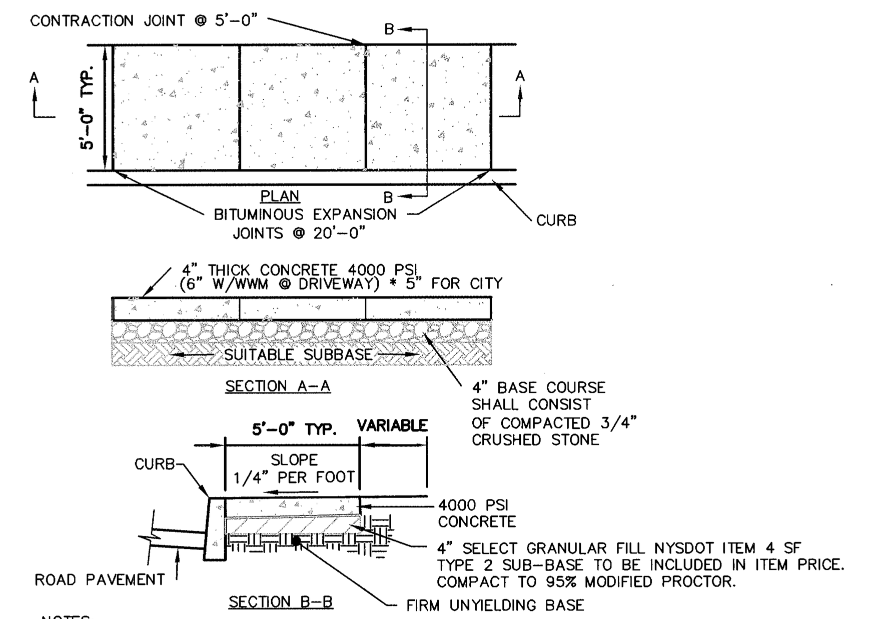

NOTES:
1. A PREFORMED, BITUMINOUS EXPANSION JOINT 1/2" THICK, 4" WIDE, AND EXTENDING THE FULL WIDTH OF THE WALK, UNBROKEN, SHALL BE INSTALLED EVERY 20 FEET. CONTRACTION JOINTS SHALL BE INSTALLED EVERY 5 FEET (MAX.) THE FULL WALK WIDTH.
2. THERE SHALL BE A FLOAT FINISH WITH THE EDGES FINISHED WITH A SUITABLE TOOL.
3. DIMENSIONS SHOWN AS VARIABLE SHALL BE CONFIRMED BY THE ENGINEER.
4. WHERE MATERIAL IS NOT USED THE CITY OF POUGHKEEPSIE WILL BE CREDITED IN AREAS WHERE MORE THAN THE SPECIFIED AMOUNT OF MATERIAL IS USED. MAJOR GRADE CHANGES WILL BE APPROVED BY THE CITY ENGINEERING DEPT AND WILL BE PAID UNDER APPROPRIATE ITEMS.
5. UPON COMPLETION OF CURING ALL CONCRETE SURFACES SHALL BE COATED WITH SODIUM CHLORIDE INHIBITING SEALER AS REQ'D.

CONCRETE SIDEWALK DETAIL
N.T.S.

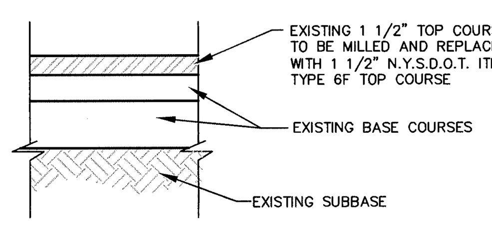

MILL & PAVEMENT REPLACEMENT DETAIL
N.T.S.

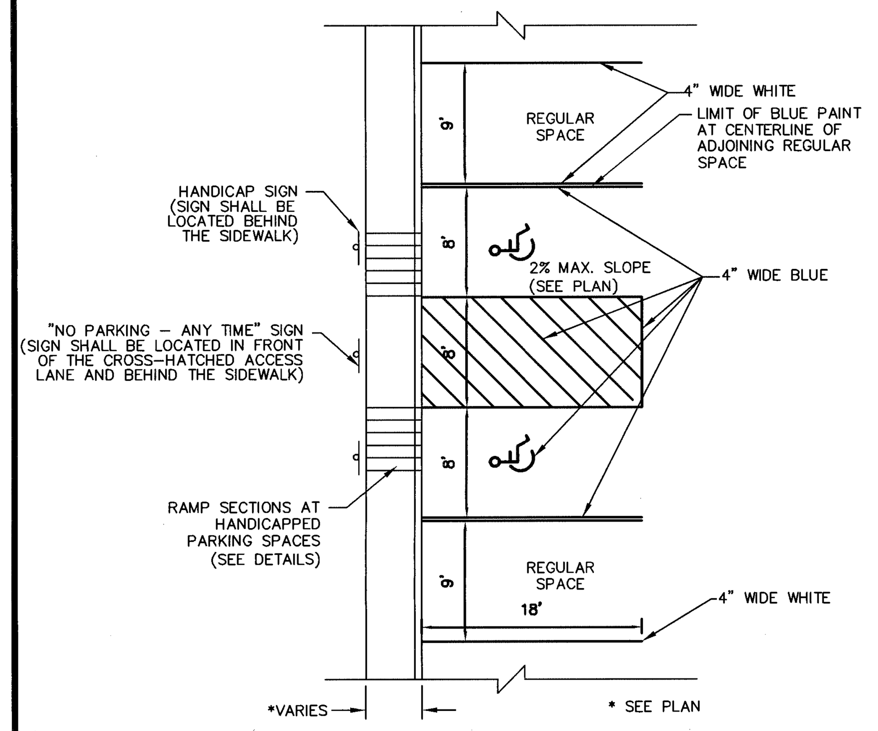

HANDICAPPED/REGULAR PARKING STALL STRIPING DETAIL
N.T.S.

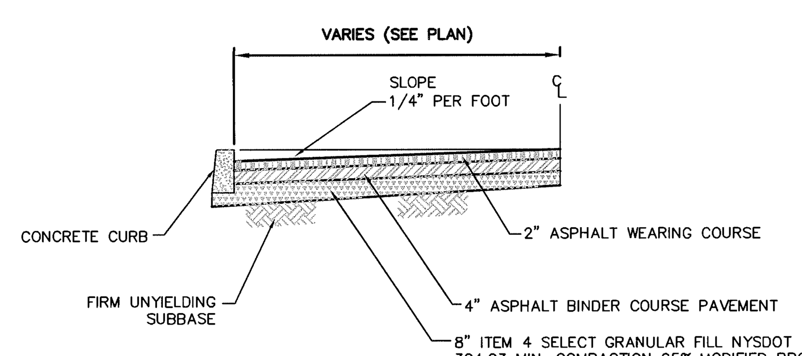

ROADWAY PAVEMENT SECTION
N.T.S.

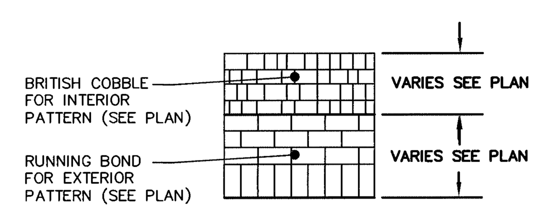

STAMPED ASPHALT PATTERNS FOR INTERSECTIONS
N.T.S.

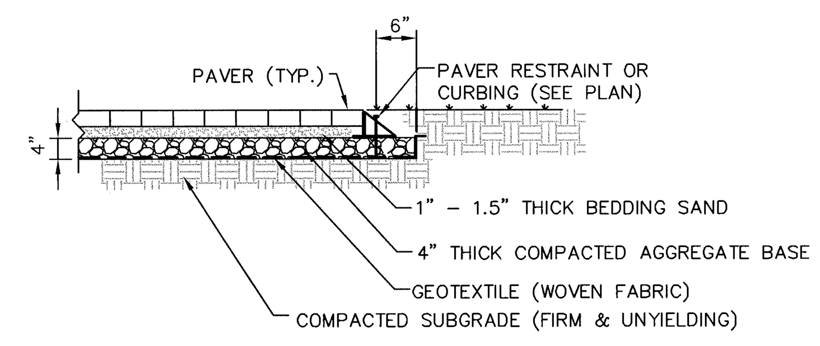

NOTE:
1. AS SUPPLIED BY BELGARD OR APPROVED EQUAL.
2. INSTALL PER MANUFACTURERS SPECIFICATIONS.

CONCRETE PAVER SECTION DETAIL
N.T.S.

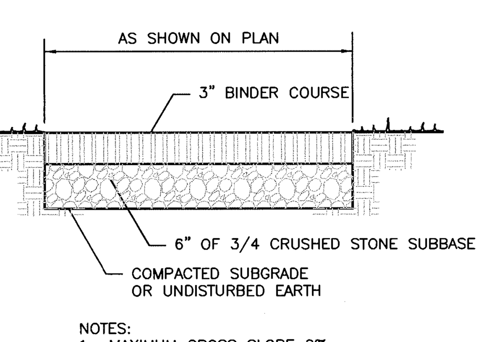

NOTES:
1. MAXIMUM CROSS SLOPE 2%

ASPHALT GREENWAY TRAIL
N.T.S.

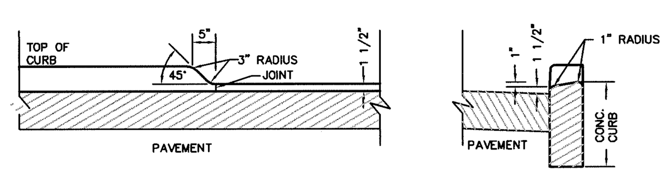

NOTE:
1. ALL OTHER PEDESTRIAN WALKWAYS TO MEET ADA REQUIREMENTS (SEE DETAILS).

DROP CURB AT SERVICE ACCESS FOR BUILDINGS A, B, C, E & F
N.T.S.

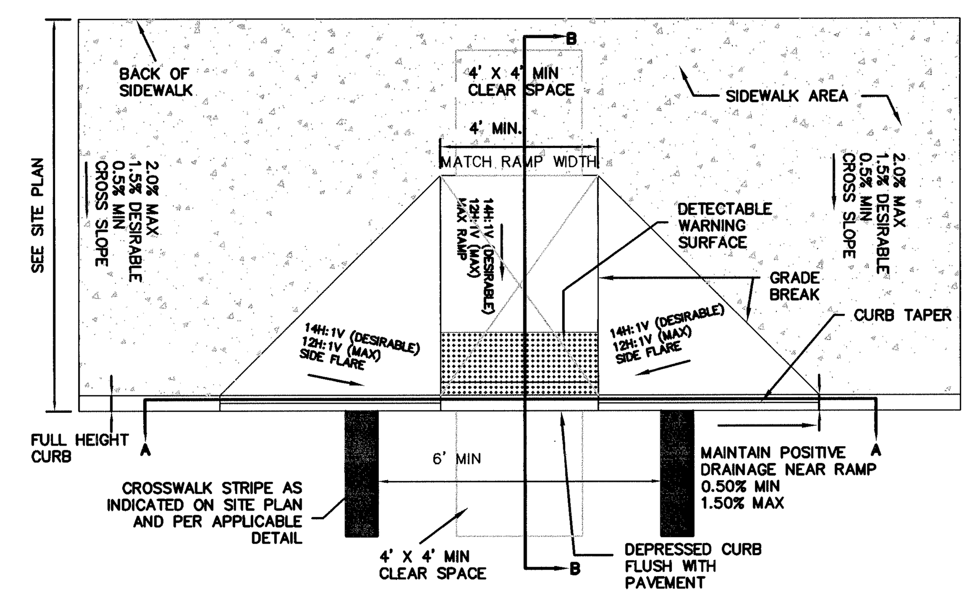

PERPENDICULAR CURB RAMP
N.T.S.

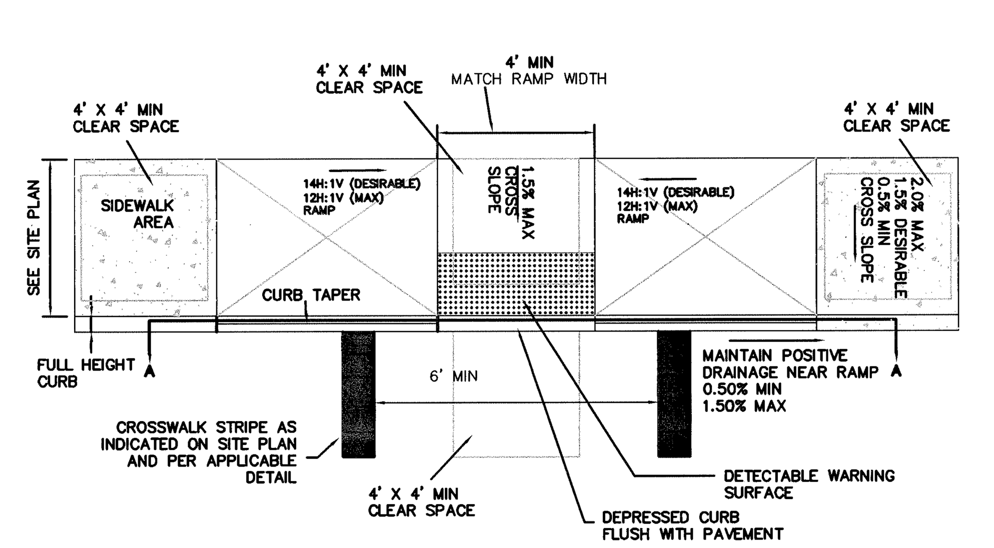

CURB RAMP TYPE 5
N.T.S.

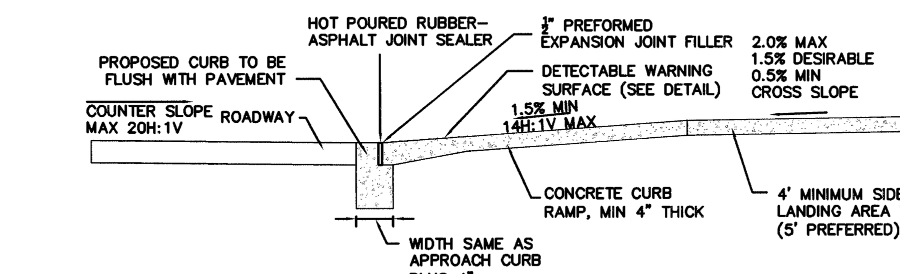

CURB RAMP SECTION B-B
N.T.S.

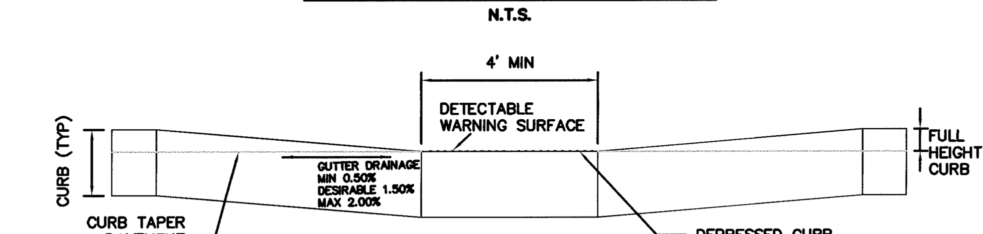

CURB RAMP SECTION A-A
N.T.S.

NOTES:
1. DEPRESSED CURB AT DETECTABLE WARNING SHALL BE A SMOOTH LEVEL SURFACE THAT IS FLUSH WITH THE ADJOINING PAVEMENT. NO BUMPS OR ROUGH SURFACE ARE ALLOWED. SUCH UNEVENNESS SHALL BE MILLED OR GRINDER SMOOTH.
2. POSITIVE DRAINAGE SHALL BE MAINTAINED AT RAMP. RAMP SHALL SLOPE TOWARDS PAVEMENT NO PONDING OF WATER IS PERMITTED AT CURB RAMP. PAVEMENT GRADES TO BE ADJUSTED AS NECESSARY TO PROVIDE POSITIVE DRAINAGE.
3. CURB (DROPPED CURB) GUTTER-LINE TO BE FLUSH WITH ROADWAY PAVEMENT.
4. MAXIMUM GUTTER DRAINAGE GRADE MAY BE INCREASED TO 2.00% UPON THE WRITTEN APPROVAL OF THE UNDERSIGNED PROFESSIONAL.
5. DEVIATION FROM THIS DETAIL REQUIRES THE WRITTEN APPROVAL OF THE UNDERSIGNED PROFESSIONAL.

CURB RAMP NOTES

CURB RAMP NOTES:
1. THE CONTRACTOR SHALL PREPARE SHOP DRAWINGS OF EACH CURB RAMP FOR SUBMISSION AND APPROVAL OF THE UNDERSIGNED PROFESSIONAL AND THE MUNICIPAL, COUNTY, STATE OR OTHER AGENCY'S ENGINEER HAVING JURISDICTION.
2. LANDING AREA, APPROACH SIDEWALK TRANSITIONS AND CURB RAMP SHALL BE KEPT CLEAR OF OBSTRUCTIONS.
3. CURB (DROPPED CURB) GUTTER-LINE TO BE FLUSH WITH ROADWAY PAVEMENT.
4. CROSSWALKS AND PAVEMENT MARKINGS TO BE INSTALLED AS DENOTED ON SITE PLAN.
5. MAXIMUM RAMP SLOPE MAY BE 12H:1V UPON APPROVAL OF ENGINEER. RAMP SLOPES SHOWN ARE THE PREFERRED SLOPE. SIDE FLARE SLOPES MAY BE 10H:1V UPON THE APPROVAL OF THE ENGINEER.
6. MINIMUM RAMP CROSS-SLOPE SHALL BE 0.50% OR THE MAXIMUM RAMP CROSS-SLOPE MAY BE 2.00% UPON APPROVAL OF THE ENGINEER. CROSS-SLOPES SHOWN IN THE DETAILS ARE THE PREFERRED SLOPE MAINTAIN A LEVEL OF CONSTRUCTION TOLERANCE.
7. ACCESSIBLE RAMPS SHALL BE INSTALLED PURSUANT WITH THE CURRENT UNITED STATES ACCESS BOARD ACCESSIBILITY GUIDELINES FOR PEDESTRIAN FACILITIES AND THE ADA STANDARDS FOR ACCESSIBLE DESIGN AS PUBLISHED BY THE UNITED STATES DEPARTMENT OF JUSTICE AND OTHER APPLICABLE LOCAL AND STATE STANDARDS IN EFFECT AT THE DATE OF CONSTRUCTION.
8. DEVIATION FROM THE CURB RAMP DETAIL REQUIRES THE WRITTEN APPROVAL OF THE UNDERSIGNED PROFESSIONAL AND THE MUNICIPAL, COUNTY, STATE OR OTHER AGENCY'S ENGINEER HAVING JURISDICTION.
9. THE RAMP SURFACE SHALL BE A NON-SLIP, HAND BROOMED FINAL FINISH OF CONCRETE SURFACES.
10. CONCRETE EXPANSIONS JOINTS SHALL BE FIRM SURFACES, WITH CONCRETE EDGES 1/4" BEVELED, AND WITH THE JOINT SURFACE NOT MORE THAN 1/4" BELOW THE ADJOINING CONCRETE SURFACE.
11. CURB RAMPS MUST BE WHOLLY CONTAINED WITHIN THE CROSSWALK CROSSING.
12. THE CLEAR SPACE SHALL BE INCREASED TO 5 FEET WHERE THE TURNING SPACE IS CONSTRAINED AT THE BACK OF THE SIDEWALK.
13. ON CURVED CROSSWALKS, THE MAXIMUM SEPARATION BETWEEN THE CURB AND DETECTABLE WARNING SURFACE SHALL NOT EXCEED 5 FEET. THE MAXIMUM SEPARATION AREA MAY BE WITHIN THE 4' BY 4' CLEAR ZONE. A SHOP DRAWING SHALL BE SUBMITTED PRIOR TO CONSTRUCTION FOR APPROVAL.

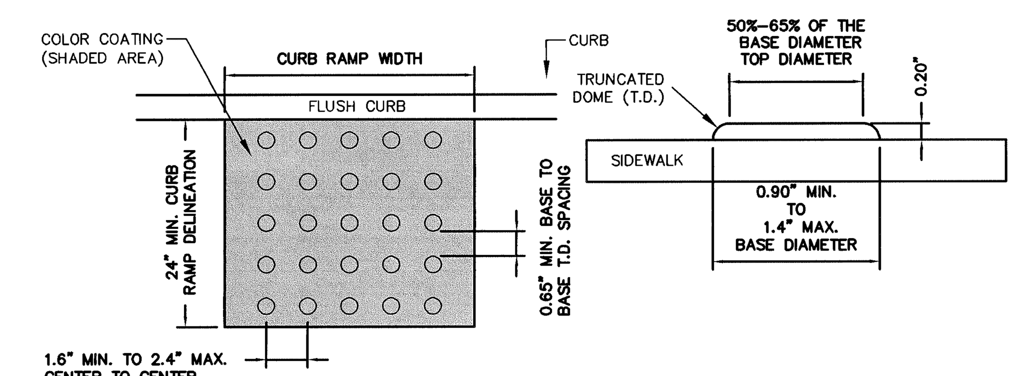

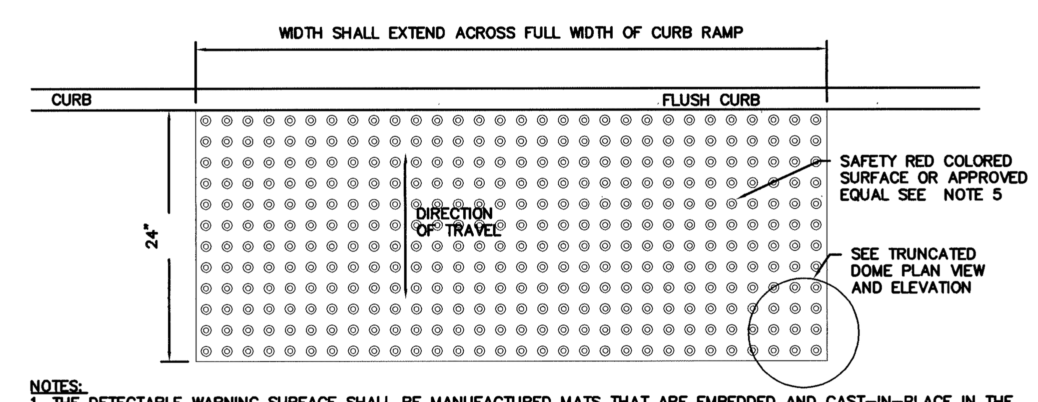

NOTES:
1. THE DETECTABLE WARNING SURFACE SHALL BE MANUFACTURED MATS THAT ARE EMBEDDED AND CAST-IN-PLACE IN THE CONCRETE.
2. IN LIEU OF A CAST IN PLACE DETECTABLE WARNING SURFACE, THE CONTRACTOR MAY UTILIZE A SURFACE APPLIED DETECTABLE WARNING SURFACE WITH PRIOR APPROVAL OF THE UNDERSIGNED ENGINEER AND PRIOR TO POURING OF THE CONCRETE RAMP.
3. THE CONTRACTOR SHALL SUBMIT TO THE ENGINEER A SHOP DRAWING OF THE DETECTABLE WARNING SURFACE PRIOR TO CONSTRUCTION FOR APPROVAL.
4. THE CONTRACTOR SHALL PROVIDE A MANUFACTURER CERTIFICATION THAT THE DETECTABLE WARNING SURFACE COMPLIES WITH THE CURRENT ADA STANDARDS FOR ACCESSIBLE DESIGN AS PUBLISHED BY THE DEPARTMENT OF JUSTICE AND THE ADA STANDARDS AS SUPPORTED BY THE UNITED STATES ACCESS BOARD, AND THE STATE AND/OR LOCAL ADA STANDARDS.
5. SAFETY RED SHALL BE APPROVED BY THE LOCAL JURISDICTION PRIOR TO INSTALLATION. DETECTABLE WARNING SURFACES SHALL CONTRAST VISUALLY WITH ADJACENT WALKING SURFACES EITHER LIGHT-ON-DARK, OR DARK-ON-LIGHT. ALTERNATIVE COLOR MAY BE USED PROVIDED SUCH COLOR COMPLIES WITH CURRENT ADA STANDARDS.
6. DETECTABLE WARNINGS SHALL CONSIST OF A SURFACE OF TRUNCATED DOMES AND SHALL COMPLY DETECTABLE WARNINGS.
7. TRUNCATED DOMES IN A DETECTABLE WARNING SURFACE SHALL HAVE A BASE DIAMETER OF 0.9 INCH (23 mm) MINIMUM AND 1.4 INCHES (36 mm) MAXIMUM, A TOP DIAMETER OF 50 PERCENT OF THE BASE DIAMETER MINIMUM TO 65 PERCENT OF THE BASE DIAMETER MAXIMUM, AND A HEIGHT OF 0.2 INCH (5.1 mm).
8. TRUNCATED DOMES IN DETECTABLE WARNING SURFACE SHALL HAVE A CENTER-TO-CENTER SPACING OF 1.6 INCHES (41 mm) MINIMUM AND 2.4 INCHES (61 mm) MAXIMUM, AND A BASE-TO-BASE SPACING OF 0.65 INCH (17 mm) MINIMUM, MEASURED BETWEEN THEY MOST ADJACENT DOMES ON A SQUARE GRID.

DETECTABLE WARNING SURFACE
N.T.S.

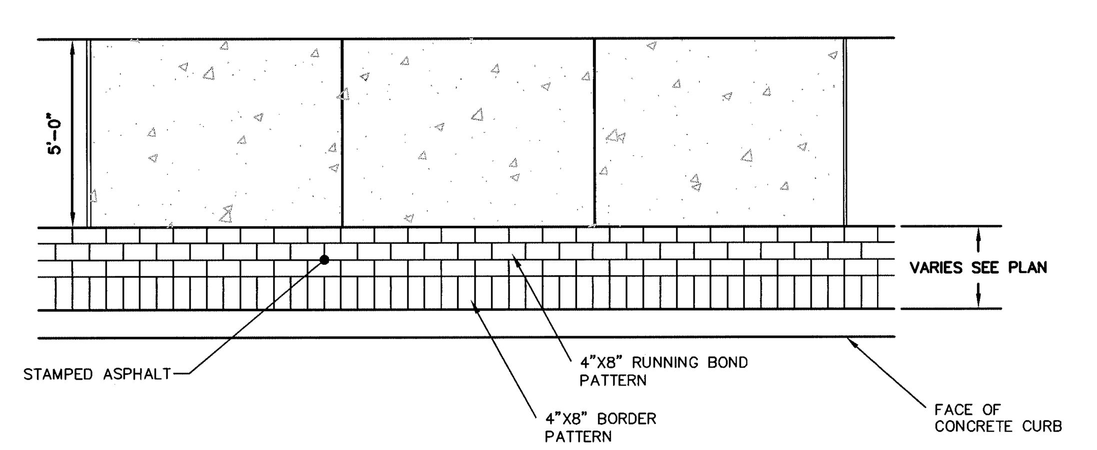

SIDEWALK/STAMPED ASPHALT DETAIL FOR DUTCHESS AVE
(MATCH PATTERN ON NORTH WATER STREET)
N.T.S.

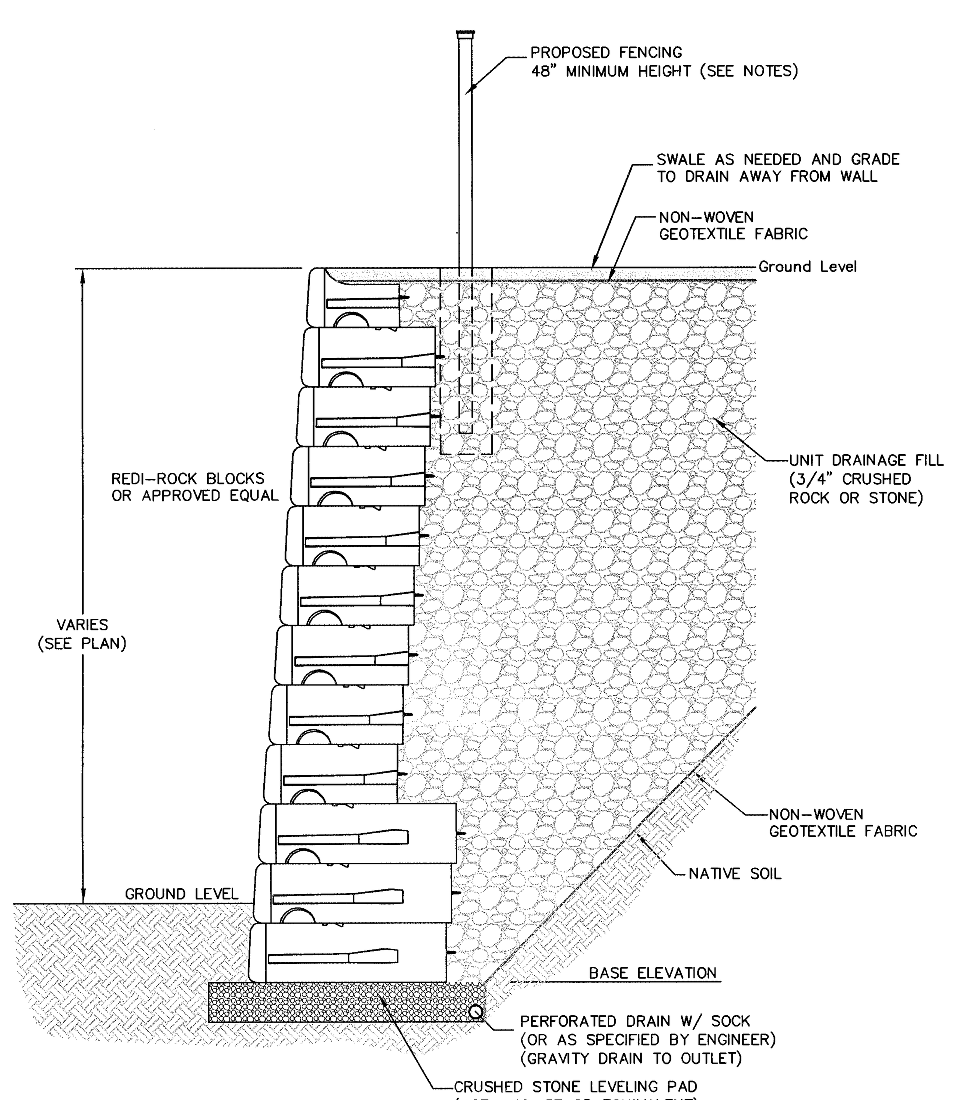

NOTES:
1. MODULAR CONCRETE BLOCK WALL TO BE INSTALLED IN FIELD IN ACCORDANCE WITH MANUFACTURER'S INSTRUCTIONS.
2. CONTRACTOR TO PROVIDE SITE SPECIFIC SHOP DRAWINGS AND STRUCTURAL DESIGN CALCULATIONS FOR EACH RETAINING WALL FOR REVIEW AND APPROVAL PRIOR TO CONSTRUCTION.
3. WALL DESIGN TO BE PREPARED BY A LICENSED PROFESSIONAL ENGINEER.
4. PLACEMENT AND INSTALLATION METHOD OF PROPOSED FENCING TO BE IN ACCORDANCE WITH THE WALL MANUFACTURERS SPECIFICATIONS.

REDI-ROCK RETAINING WALL SYSTEM
N.T.S.

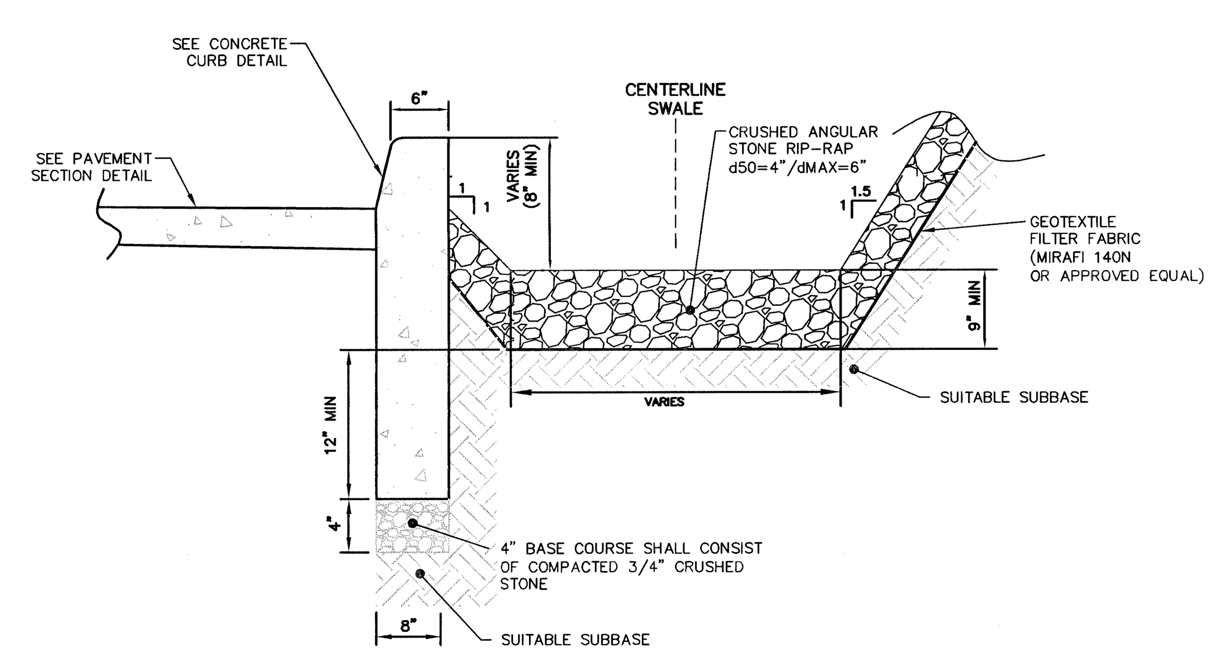

NOTES:
1. ELEVATIONS SHOWN ON THE PLAN ARE AT FINISHED GRADE (TOP OF RIP-RAP) AT CENTERLINE OF SWALE. THE SWALE SHOULD BE OVER-EXCAVATED TO MEET MINIMUM LINER THICKNESS SHOWN HEREON TO MEET FINISHED GRADE.
2. INSTALLATION SHALL BE IN ACCORDANCE WITH NEW YORK STATE STANDARDS & SPECIFICATION FOR EROSION & SEDIMENT CONTROL.

VARYING HEIGHT EXPOSED CURB BACK DETAIL
N.T.S.

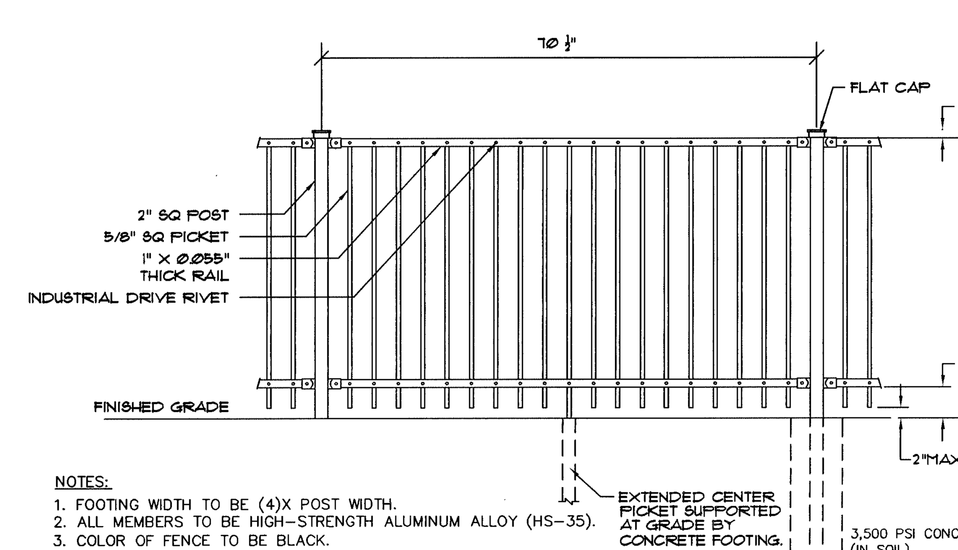

NOTES:
1. FOOTING WIDTH TO BE (4)X POST WIDTH.
2. ALL MEMBERS TO BE HIGH-STRENGTH ALUMINUM ALLOY (HS-35).
3. COLOR OF FENCE TO BE BLACK.
4. JERITH STYLE #202 FENCE OR APPROVED EQUAL

4' JERITH FENCING
N.T.S.

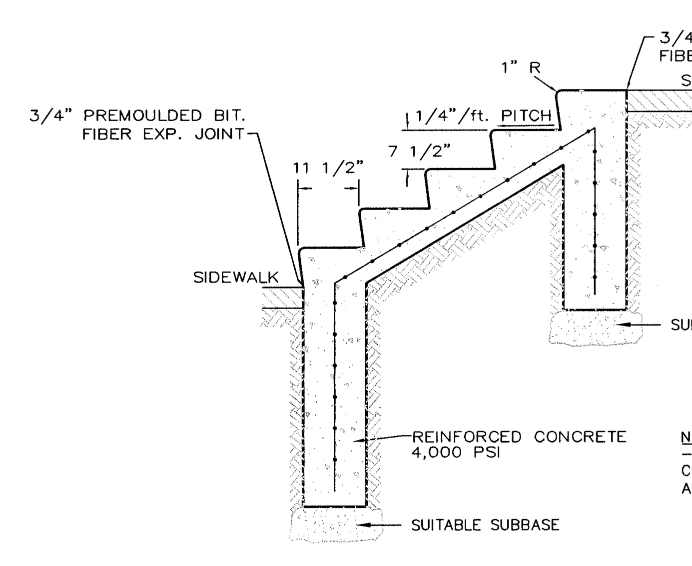

CONCRETE STAIRS
N.T.S.

NOTES:
-STAIR DIMENSIONS, SURFACES AND INSTALLATION MUST COMPLY WITH THE LATEST EDITION OF ADA REQUIREMENTS AND NYS BUILDING CODE (AS APPLICABLE).

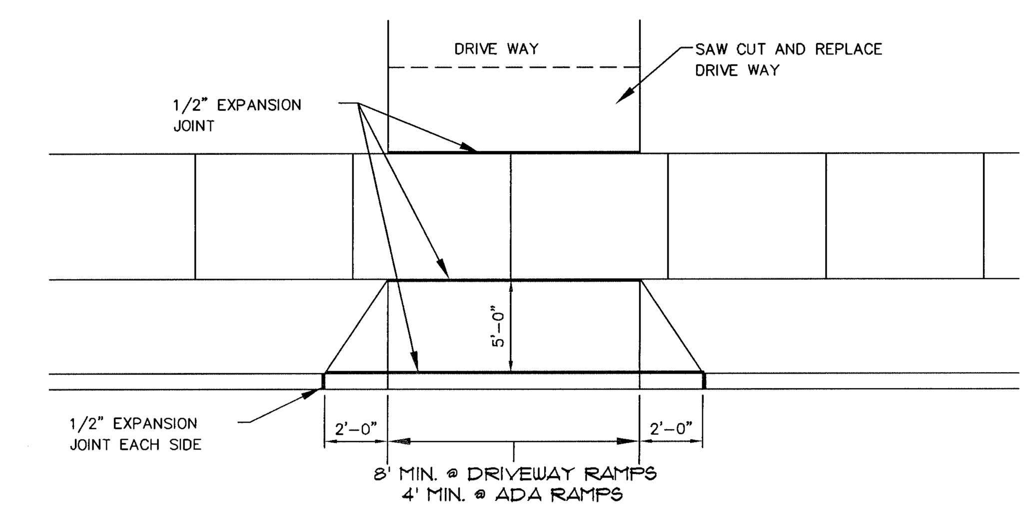

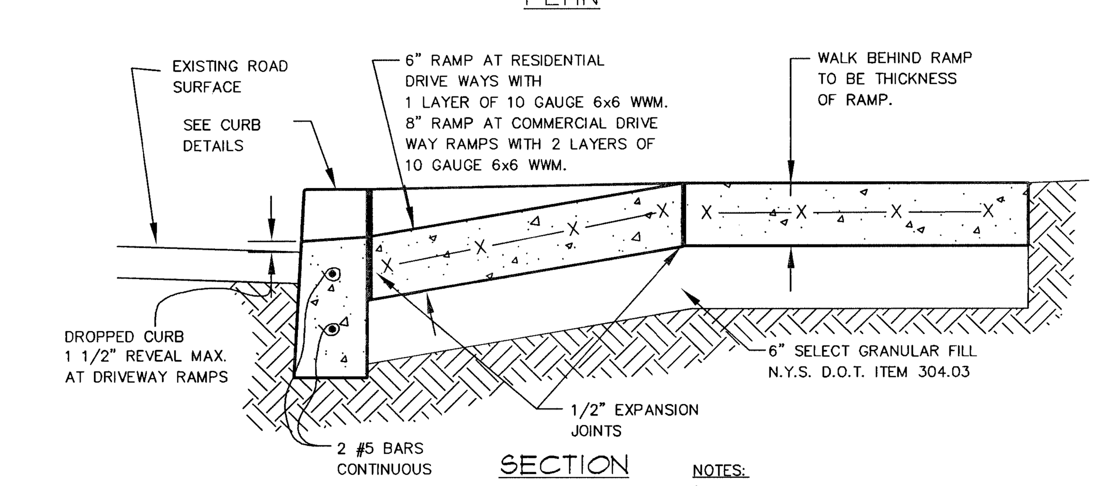

NOTES:
1. ALL CONCRETE SHALL BE MINIMUM 4,000 PSI.

DRIVEWAY APRON DETAIL FOR DUTCHESS AVENUE
N.T.S.

REV	DATE	DRAWN BY	DESCRIPTION
9	08/27/15	JAP	REVISIONS PER DOH COMMENTS
8	07/10/15	JAP	REVISIONS PER DCDH COMMENTS
7	06/10/15	JJS	REVISIONS PER CITY RESOLUTION & DCHD COMMENTS
6	1/30/15	CMR	REVISIONS PER CITY RESOLUTION
5	10/29/14	JJS	REVISIONS PER CITY/TOWN/CLIENT COMMENTS
4	08/26/14	JJS	REVISIONS TO SITE PLAN PER TOWN COMMENTS
3	06/23/14	AT	REVISIONS TO SITE PLAN PER TOWN/CITY COMMENTS
2	03/18/14	AT	REVISIONS TO SITE PLAN PER CITY COMMENTS
1	01/21/14	AT	ADVANCED PLAN SET FOR PUBLIC HEARING

UNAUTHORIZED ALTERATION TO A MAP BEARING A LICENSED PROFESSIONAL ENGINEER'S SEAL IS A VIOLATION OF SECTION 7209, SUB-DIVISION 2, OF THE NEW YORK STATE EDUCATION LAW. THE CERTIFICATION IS NOT AN EXPRESS OR IMPLIED WARRANTY OR GUARANTEE. IT IS PURELY A STATEMENT OF PROFESSIONAL OPINION BASED ON KNOWLEDGE, INFORMATION AND BELIEF, BASED ON EXISTING FIELD EVIDENCE AND DOCUMENTARY EVIDENCE AVAILABLE. CERTIFICATIONS ARE NOT TRANSFERABLE TO ADDITIONAL INSTITUTIONS OR SUBSEQUENT OWNERS.

ANDREW B. FETHERSTON
NEW YORK PROFESSIONAL ENGINEER LIC. NO. 073555

MASER CONSULTING P.A.
Consulting, Municipal & Environmental Engineers
Planners • Surveyors • Landscape Architects
State of N.Y. Certificate of Authorization: 0000172
New Jersey New York Pennsylvania Virginia
Customer Loyalty through Client Satisfaction

COPYRIGHT © 2013, MASER CONSULTING P.A.
ALL RIGHTS RESERVED
THIS DRAWING AND ALL THE INFORMATION CONTAINED HEREIN IS AUTHORIZED FOR USE ONLY BY THE PARTY FOR WHOM THE WORK WAS CONTRACTED OR TO WHOM IT IS CERTIFIED. THIS DRAWING MAY NOT BE COPIED, REUSED, DISCLOSED, DISTRIBUTED OR RELIED UPON FOR ANY OTHER PURPOSE WITHOUT THE EXPRESS WRITTEN CONSENT OF MASER CONSULTING P.A.

NEWBURGH OFFICE
1607 Route 300
Suite 101
Newburgh, NY 12550
Phone: 845.564.4495
Fax: 845.564.0278
email: solutions@maserconsulting.com

ONE DUTCHESS AVENUE
CONSTRUCTION DETAILS
FOR
THE O'NEILL GROUP-DUTTON, LLC
TAX LOTS 6062-02-763508 &
6062-59-766443
TOWN/CITY OF POUGHKEEPSIE DUTCHESS COUNTY NY

SCALE:	DATE:	DRAWN BY:	CHECKED BY:
AS SHOWN	06/13/13	JJS	ABF

PROJECT NUMBER: 07001417B NB001559

SHEET NUMBER: 16 of 26

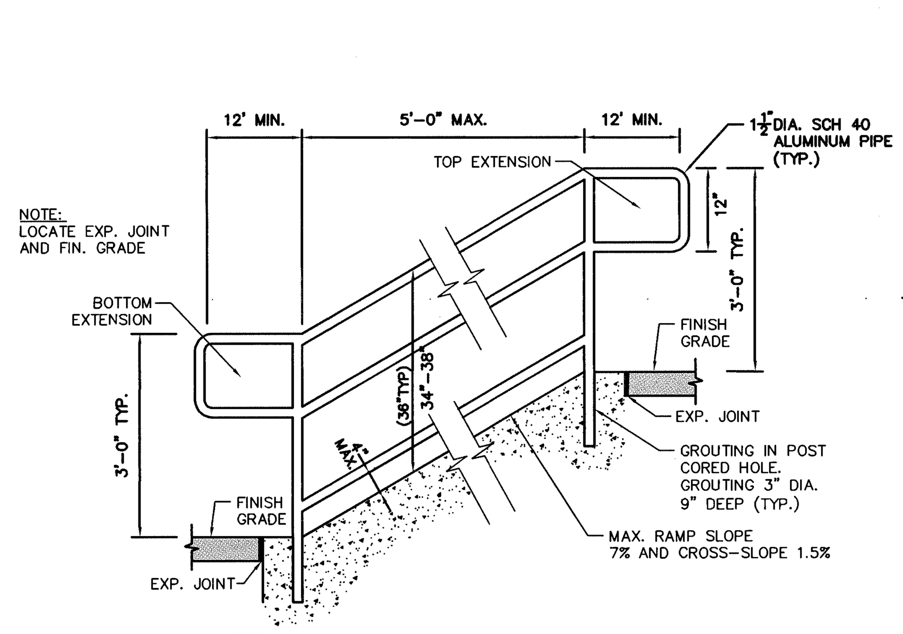

NOTES:
1. WHEN DISTANCE BETWEEN HANDRAIL POSTS EXCEEDS 5', USE INTERMEDIATE POST(S) SPACED EQUALLY.
2. ALL HANDRAIL MEMBERS TO BE 1–1½" O.D. ALUMINUM. FLUSH JOINT, INTERIOR SLEEVE WHEN REQUIRED.
3. EXTENSIONS MAY EXTEND TO A WALL, GUARD, WALKING SURFACE, OR MAY BE CONTINUOUS TO THE HANDRAIL OF AN ADJACENT RAMP RUN.
4. ALL ASPECTS OF THE RAILING SHALL COMPLY WITH ICC/ANSI A117.1–2003.

PIPE RAIL HANDRAIL IN RAMP DETAIL
N.T.S.

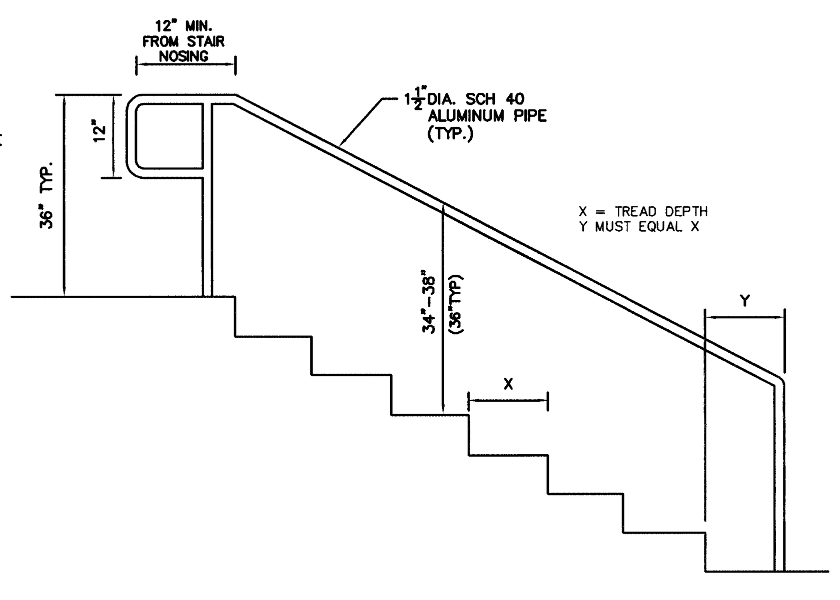

NOTES:
1. WHEN DISTANCE BETWEEN HANDRAIL POSTS EXCEEDS 5', USE INTERMEDIATE POST(S) SPACED EQUALLY.
2. ALL HANDRAIL MEMBERS TO BE 1–1½" O.D. ALUMINUM. FLUSH JOINT, INTERIOR SLEEVE WHEN REQUIRED.
3. EXTENSIONS MAY EXTEND TO A WALL, GUARD, WALKING SURFACE, OR MAY BE CONTINUOUS TO THE HANDRAIL OF AN ADJACENT RAMP RUN.
4. ALL ASPECTS OF THE RAILING SHALL COMPLY WITH ICC/ANSI A117.1–2003.

STEP DETAIL
N.T.S.

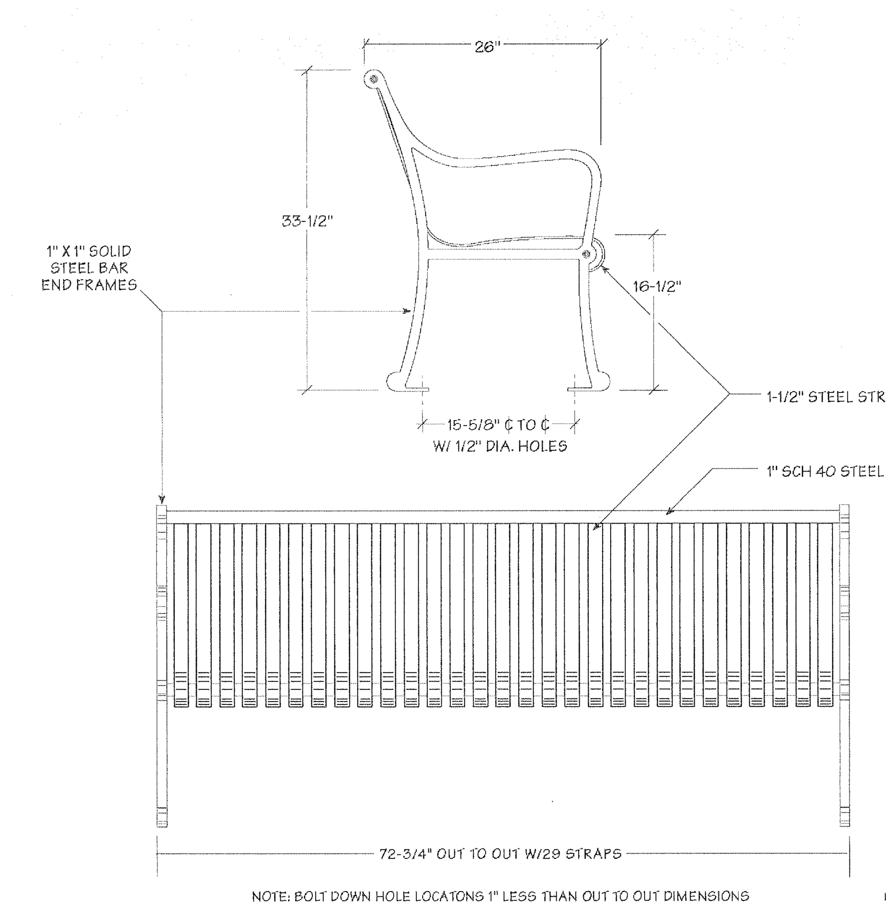

NOTES:
1. BENCHES TO BE DARK GREEN.

BENCH DETAIL
SCALE: N.T.S.

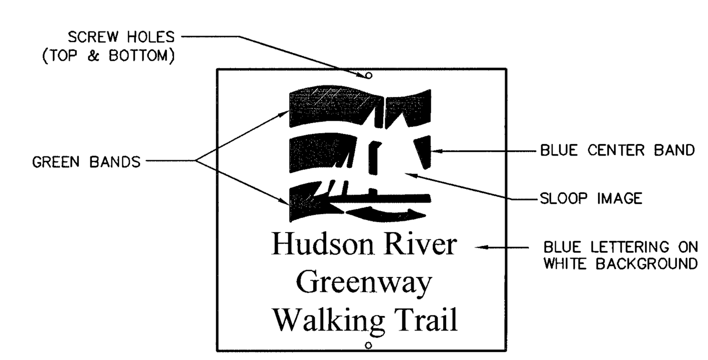

MAIN SIGN: 3'X4'
OTHER SIGNS: 3"X3"

GREENWAY TRAIL SIGN
SCALE: N.T.S.

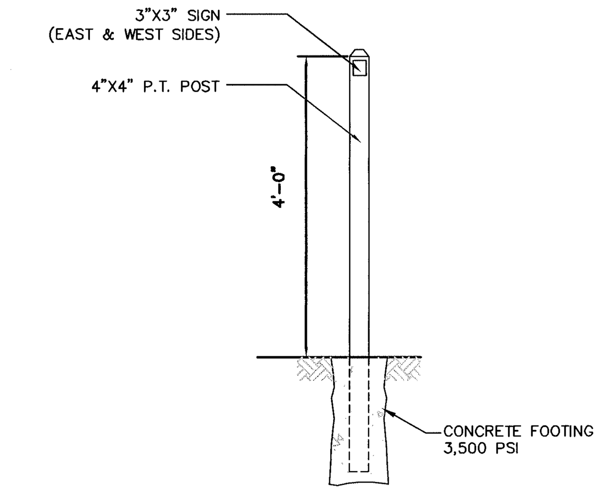

GREENWAY TRAIL SIGN POST
SCALE: N.T.S.

NOTES:
1. USE (2) POSTS FOR 3'X4' MAIN WALKWAY SIGN.

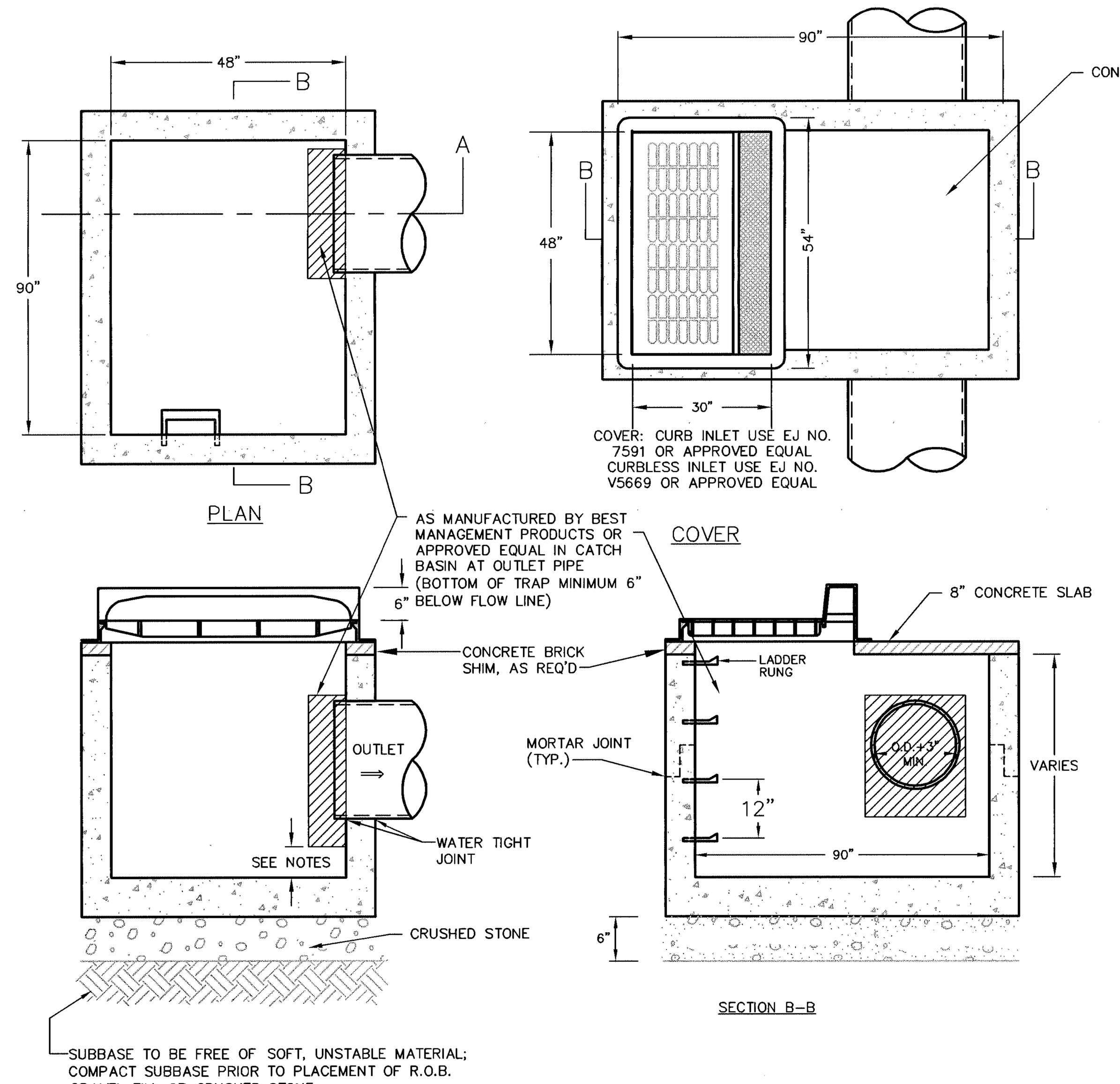

CATCH BASIN OCB–9 & OCB–11
N.T.S.

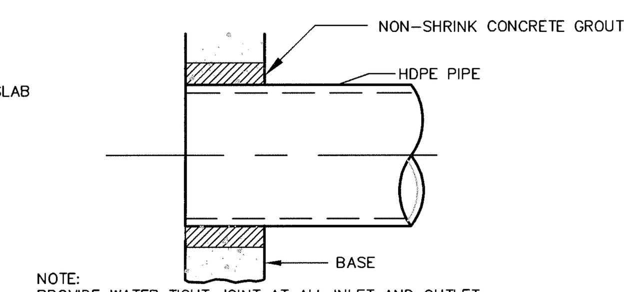

NOTE:
PROVIDE WATER TIGHT JOINT AT ALL INLET AND OUTLET PIPES AT ALL MANHOLES AND CATCH BASINS.

MANHOLE AND CATCH BASIN JOINT DETAIL
SCALE: N.T.S.

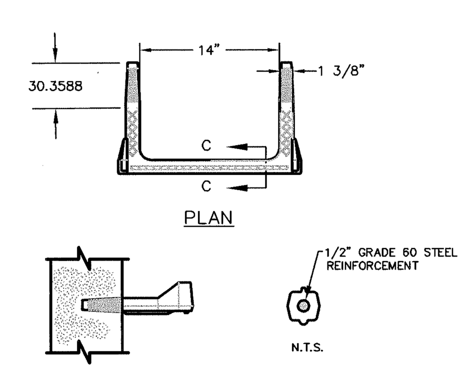

NOTES:
1. CATCH BASIN SHALL BE PRECAST CONCRETE. DESIGNED FOR H–20–44 VEHICULAR LOADING AND 30% IMPACT.
2. FRAME AND COVER SHALL BE DESIGNED FOR H–20–44 VEHICULAR LOADING AND 30% IMPACT.
3. CONCRETE CATCH BASIN CASTING CLEAR OPENING DIMENSION MUST MATCH FRAME AND GRATE. CLEAR OPENING DIMENSION (30"x48") FOR H–20–44 VEHICULAR LOADING.
4. CATCH BASINS HAVING A DEPTH GREATER THAN 48" FROM FINISHED SURFACE TO THE TOP OF THE CONCRETE BASE SHALL BE PROVIDED WITH STEPS.
5. BACKFILL USING SELECT MATERIAL, COMPACTED IN 6" LIFTS.
6. WHERE APPLICABLE AND IDENTIFIED WITH "HI" DESIGNATION ON THE PLANS, SUMP AND HOOD DIMENSIONS SHALL AS REQUIRED BY MANUFACTURER.
7. EXISTING CONNECTION TO BE ABANDONED AND CAPPED AT CATCH BASIN, MANHOLE, AT EXPOSED TRENCH CROSSING AS ORDERED BY ENGINEER. PIPE TO BE SEALED TO SATISFACTION OF ENGINEER BY USE OF BRICK AND MORTAR WITH CAP TO SEAL.

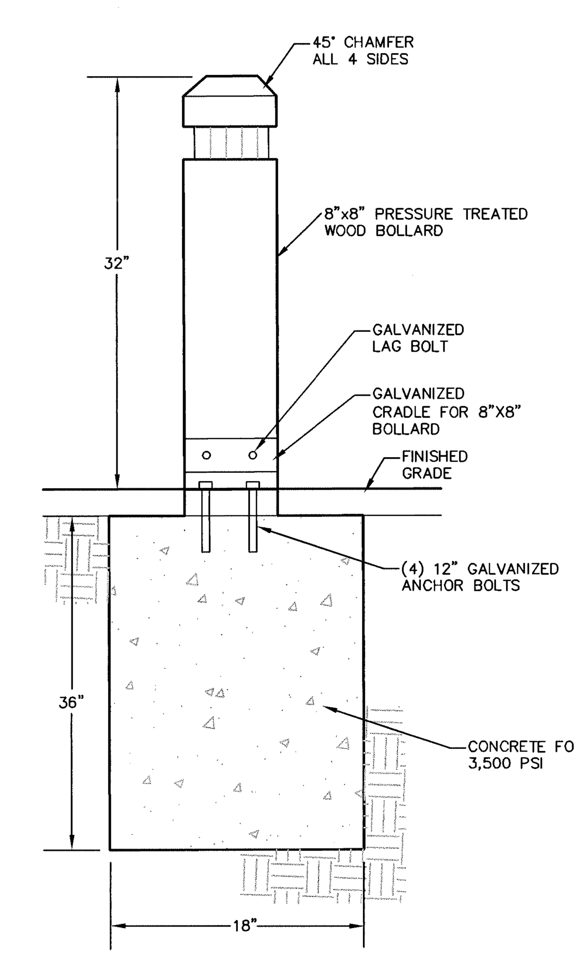

REMOVABLE WOODEN BOLLARD
N.T.S.

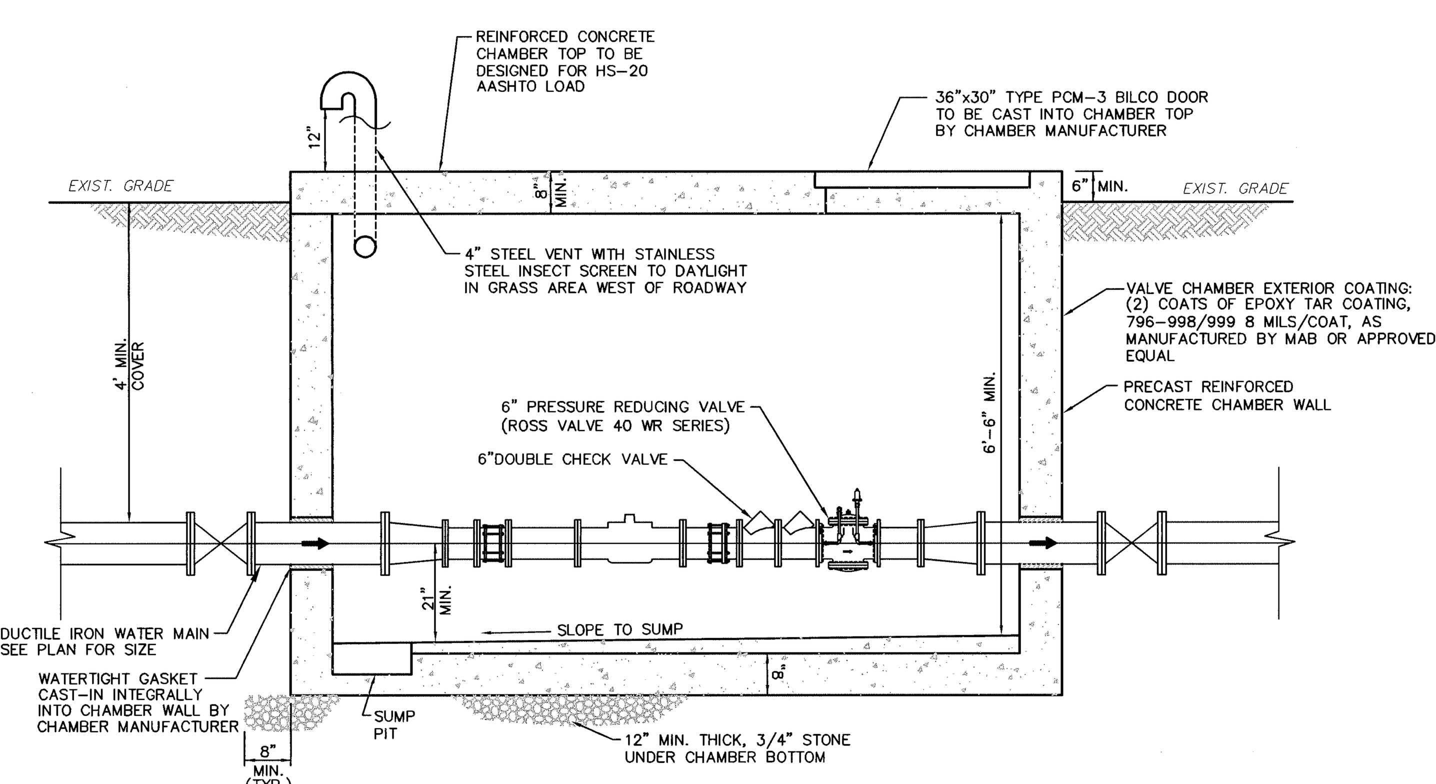

SECTION VIEW

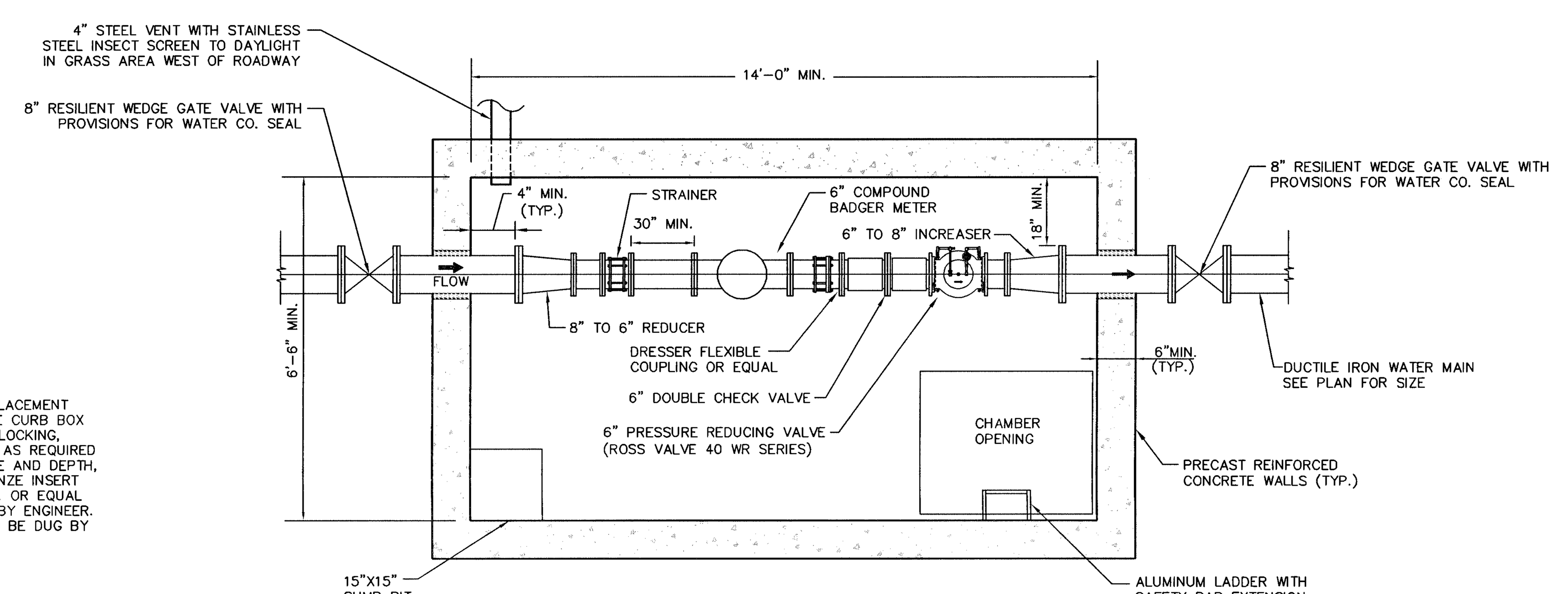

PLAN VIEW

NOTES:
1. ACCESS TO CHAMBER BY 36"x30" TYPE PCM–3 FLUSH WATERTIGHT SIDEWALK DOOR AS MANUFACTURED BY BILCO, OR EQUAL. ALUMINUM RUNGS AT 1' O.C. MUST BE PROVIDED. ENTIRE CHAMBER INSIDE AND OUTSIDE MUST BE COMPLETELY WATERPROOFED. AROUND CHAMBER MUST BE GRADED TO DRAIN WATER AWAY FROM CHAMBER.
2. ALL CHAMBER AND PIPING CONSTRUCTION SUBJECT TO WATER COMPANY APPROVAL PRIOR TO SERVICE CONNECTION.
3. "LADDER–UP" SAFETY POST BY BILCO OR EQUAL SHALL BE INSTALLED.
4. ALL 3" AND LARGER CONNECTIONS WITHIN THE METER CHAMBER SHALL BE FLANGED TYPE CONNECTIONS, UNLESS OTHERWSE NOTED.
5. ALL CONNECTIONS OUTSIDE THE METER CHAMBER SHALL BE AS SPECIFIED FOR BURIED WATER MAINS. ALL GATE VALVES TO BE "RIGHT OPEN"
6. PIPE/EQUIPMENT SYSTEM TO BE ADEQUATELY SUPPORTED WITHIN THE CHAMBER.
7. MINIMUM STRENGTH 4000 PSI CONCRETE WITH ADEQUATE STEEL REINFORCEMENT TO WITHSTAND H20 HIGHWAY LOAD AND SOIL LOADS.
8. PROVIDE SHOP DRAWINGS FOR PRECAST AND ALL APPURTENANCES.
9. 6" DOUBLE CHECK VALVE SHALL BE WATTS LEAD FREE SERIES LF709 OF APPROVED EQUAL.

METER CHAMBER DETAIL
N.T.S.

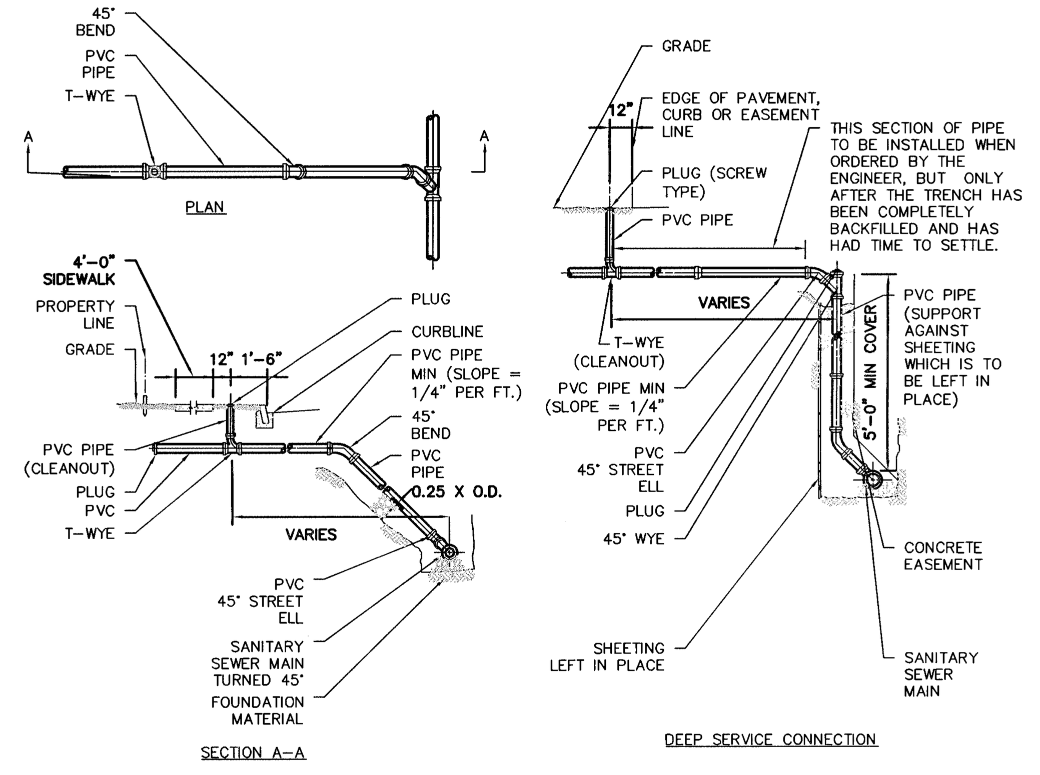

NOTES:
1. ALL COUPLINGS, PLUGS, SOIL PIPES & CAPS TO BE STANDARD FOR TYPE OF PIPE USED, INSTALLATION TO BE WATERTIGHT.
2. CLEANOUTS & INSPECTION TEES ARE TO BE LOCATED 1'–6" FROM CURB.
3. WHERE CURBS DO NOT EXIST PLACE CLEANOUT 1'–0" OUTSIDE OF STREET R.O.W.
4. CLEANOUTS AS SHOWN ARE REQUIRED ON ALL HOUSE CONNECTIONS, EXCEPT WHEN SEWERING EMPTY LOTS.
5. HOUSE CONNECTIONS ARE TO BE AS SHOWN ON THE UTILITY PLAN.
6. ALL PLUG THREADS SHALL BE GREASED AT TIME OF INSTALLATION.
7. MINIMUM DEPTH OF COVER ON SANITARY SEWER MAINS SHALL BE 5'–0".
8. POLYVINYL CHOLRIDE PIPE AND FITTINGS FOR HOUSE LATERALS SHALL CONFORM TO ASTM D–3034.
9. PIPE DIAMETER PER UTILITY PLAN.

SANITARY SERVICE CONNECTION
N.T.S.

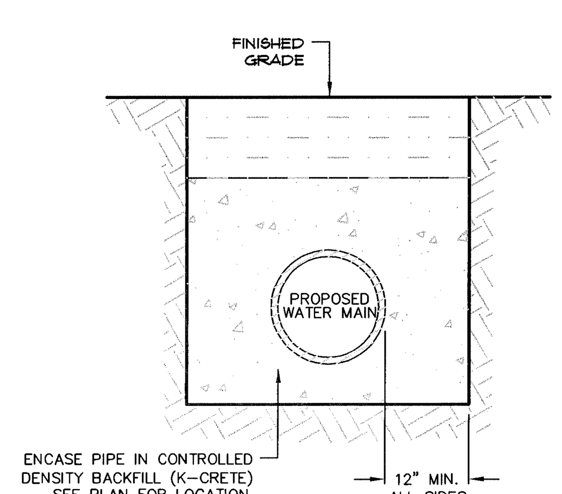

WATER MAIN ENCASEMENT DETAIL
N.T.S.

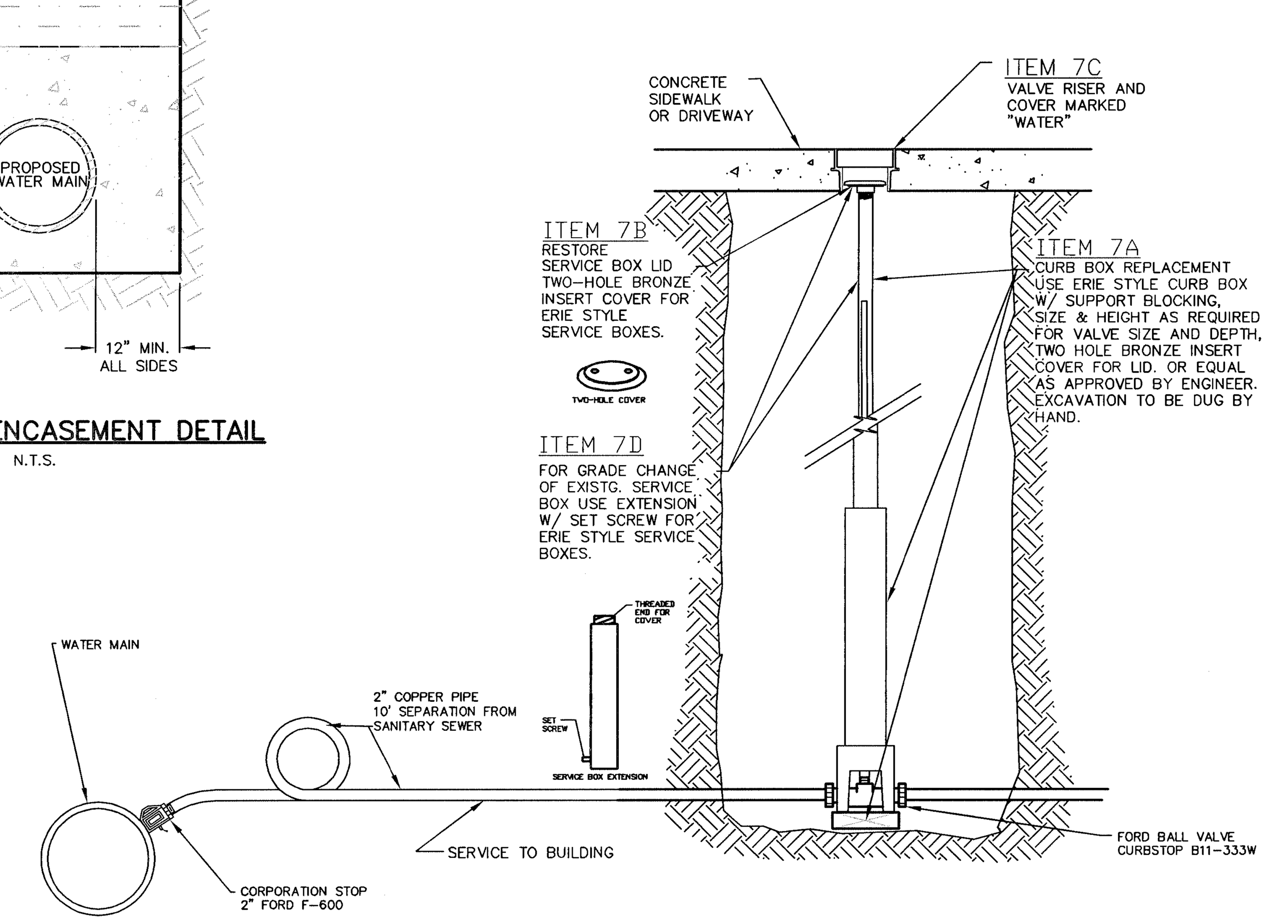

CURB BOX AND SERVICE CONNECTION
N.T.S.

REV	DATE	DRAWN BY	DESCRIPTION
9	08/27/15	JAP	REVISIONS PER DOH COMMENTS
8	07/10/15	JAP	REVISIONS PER DCDH COMMENTS
7	06/10/15	JJS	REVISIONS PER CITY RESOLUTION & DCHD COMMENTS
6	1/30/15	CMR	REVISIONS PER CITY RESOLUTION
5	10/29/14	JJS	REVISIONS PER CITY/TOWN/CLIENT COMMENTS
4	08/26/14	JJS	REVISIONS TO SITE PLAN PER TOWN COMMENTS
3	06/23/14	AT	REVISIONS TO SITE PLAN PER TOWN/CITY COMMENTS
2	03/18/14	AT	REVISIONS TO SITE PLAN PER CITY COMMENTS
1	01/21/14	AT	ADVANCED PLAN SET FOR PUBLIC HEARING

UNAUTHORIZED ALTERATION TO A MAP BEARING A LICENSED PROFESSIONAL ENGINEER'S SEAL IS A VIOLATION OF SECTION 7209, SUB-DIVISION 2, OF THE NEW YORK STATE EDUCATION LAW. THE CERTIFICATION IS NOT AN EXPRESS OR IMPLIED WARRANTY OR GUARANTEE, IT IS PURELY A STATEMENT OF PROFESSIONAL OPINION BASED ON KNOWLEDGE, INFORMATION AND BELIEF, BASED ON EXISTING FIELD EVIDENCE AND DOCUMENTARY EVIDENCE AVAILABLE. CERTIFICATIONS ARE NOT TRANSFERABLE TO ADDITIONAL INSTITUTIONS OR SUBSEQUENT OWNERS.

ANDREW B. FETHERSTON
NEW YORK STATE PROFESSIONAL ENGINEER LIC. NO. 073555

MASER CONSULTING P.A.
Consulting, Municipal & Environmental Engineers
Planners • Surveyors • Landscape Architects
State of N.Y. Certificate of Authorization: 0000172
New Jersey New York Pennsylvania Virginia
Customer Loyalty *through* Client Satisfaction

COPYRIGHT © 2013, MASER CONSULTING P.A.
ALL RIGHTS RESERVED
THIS DRAWING AND ALL THE INFORMATION CONTAINED HEREIN IS AUTHORIZED FOR USE ONLY BY THE PARTY FOR WHOM THE WORK WAS CONTRACTED OR TO WHOM IT IS CERTIFIED. THIS DRAWING MAY NOT BE COPIED, REUSED, DISCLOSED, DISTRIBUTED OR RELIED UPON FOR ANY OTHER PURPOSE WITHOUT THE EXPRESS WRITTEN CONSENT OF MASER CONSULTING P.A.

NEWBURGH OFFICE
1607 Route 300
Suite 101
Newburgh, NY 12550
Phone: 845.564.4495
Fax: 845.564.0278
email: solutions@maserconsulting.com

ONE DUTCHESS AVENUE
CONSTRUCTION DETAILS
FOR
THE O'NEILL GROUP-DUTTON, LLC
TAX LOTS 6062-02-763508 & 6062-59-766443
TOWN/CITY OF POUGHKEEPSIE DUTCHESS COUNTY NY

SCALE:	DATE:	DRAWN BY:	CHECKED BY:
AS SHOWN	06/13/13	JJS	ABF

PROJECT NUMBER: 07001417B NB001559

SHEET NUMBER: 17 of 26

Engineers
Planners
Surveyors
Landscape Architects
Environmental Scientists

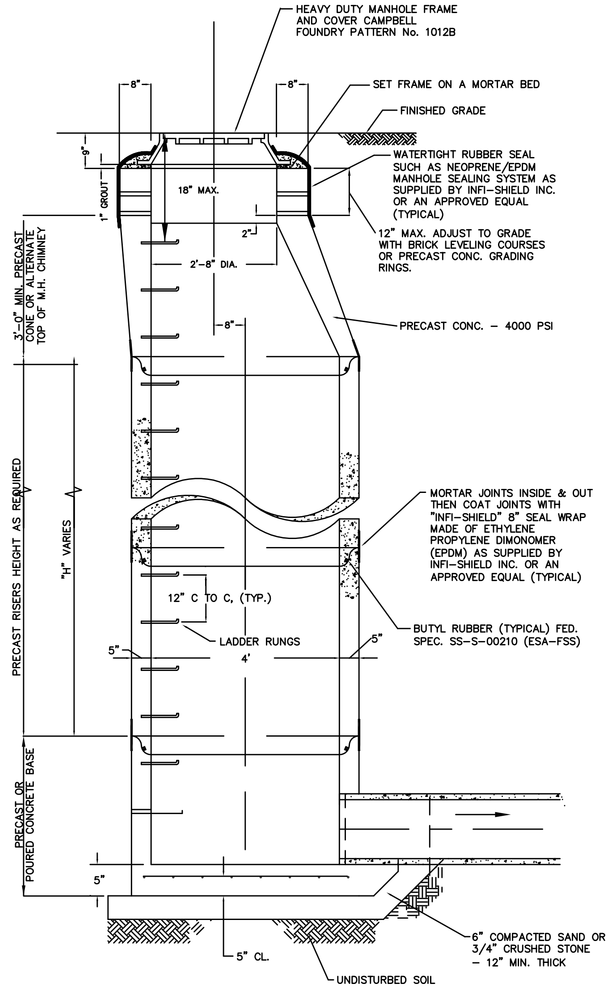

NOTES:

1. CONCRETE TO HAVE A MINIMUM COMPRESSIVE STRENGTH OF 4000 PSI @ 28 DAYS.
2. REINFORCEMENT TO BE IN CONFORMANCE WITH ASTM A615 GRADE 60 AND ASTM A185 GRADE 65.
3. CONTRACTOR TO ORDER MANHOLE SECTIONS FROM MANUFACTURER TO MATCH REQUIRED ELEVATIONS AND INVERTS PER PLAN.
4. MANHOLE CONSTRUCTION TO BE CAPABLE OF WITHSTANDING H20 LOADINGS.
5. PRECAST CONCRETE MANHOLE COMPONENTS BY FORT MILLER OR EQUAL.
6. PRECAST CONICAL TOP SECTIONS SHALL BE 4' IN HEIGHT AND SHALL HAVE WALL THICKNESS OF 5" MINIMUM AT BOTTOM AND 7" MINIMUM AT TOP, INTERMEDIATE SECTIONS MAY BE 1'-2'-3'-4' HIGH.
7. WALL THICKNESS SHOWN IS A MINIMUM REQUIREMENT AND DIAMETER SHALL VARY WITH DEPTH AS REQUIRED AND SHALL BE REFLECTED ON APPLICABLE SHOP DRAWING SUBMISSIONS FOR APPROVAL PRIOR TO CONSTRUCTION.

PRECAST STORM DRAIN MANHOLE SECTION

N.T.S.

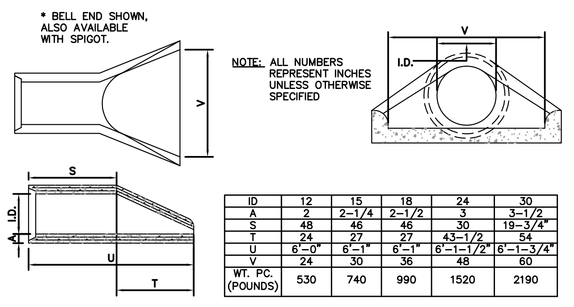

ID	12	15	18	24	30
A	2	2-1/4	2-1/2	3	3-1/2
S	48	46	46	30	19-3/4"
T	24	27	27	43-1/2	54
U	6'-0"	6'-1"	6'-1"	6'-1-1/2"	6'-1-3/4"
V	24	30	36	48	60
WT. PC. (POUNDS)	530	740	990	1520	2190

FLARED END SECTION

N.T.S.

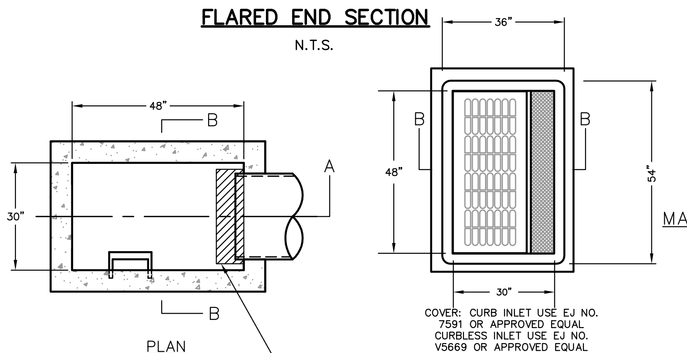

CATCH BASIN (TYP)

N.T.S.

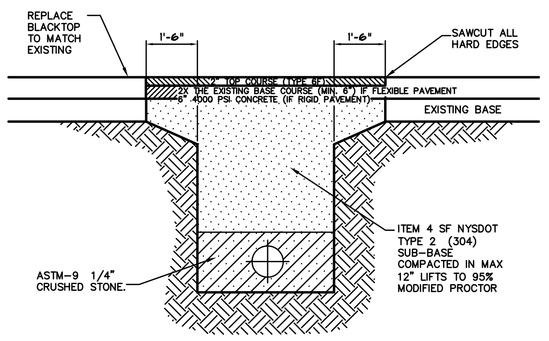

STORM TRENCH DETAIL (IN EXISTING ROADWAY)

N.T.S.

NOTES:

1. DITCH WIDTH SHALL EXTEND A MINIMUM OF ONE AND ONE–HALF FT. FROM THE EDGES OF THE TRENCH.
2. REPLACED PAVEMENT BASE MATERIAL WITHIN TRENCH LIMITS SHALL BE ITEM 4 COMPACTED IN MAX 12" LIFTS.
3. PIPE BEDDING SHALL BE A MINIMUM OF 6" ABOVE AND BELOW PIPE
4. ALL JOINTS SHALL BE MECHANICALLY SAWED.
5. ALL JOINTS SHALL BE SQUARED TO THE EXISTING EDGE OF CURB AND/OR PAVEMENT, AND TACK COATED PER DETAIL.
6. ROAD SURFACE REPLACEMENT SHALL BE MINIMUM OF SIX INCHES OF ASPHALTIC CONCRETE.
7. ASPHALT PAVEMENT TO BE PLACED IN TWO LIFTS AS SHOWN.

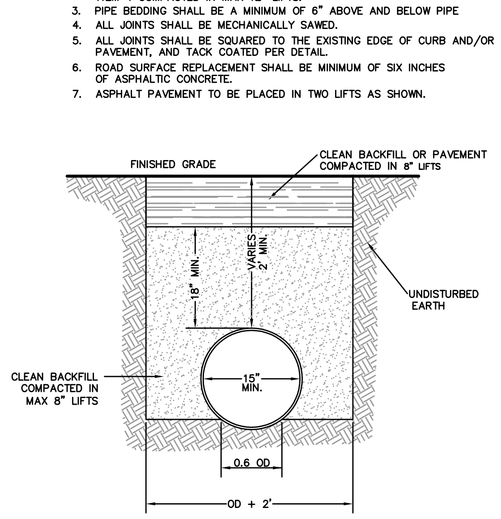

NOTES:

1. ALL FILL BELOW IMPERVIOUS AREAS SHALL BE WITH SELECT GRANULAR SUBGRADE NYSDOT ITEM 203.20 FOR THE FULL DEPTH OF THE EXCAVATION. BACKFILL SHALL BE PLACED IN 8" MAXIMUM LIFTS AND COMPACTED TO 95% OF MAXIMUM DRY DENSITY AS DETERMINED BY MODIFIED PROCTOR TEST.
2. EXCAVATIONS IN EXISTING PAVED ROADWAYS SHALL BE COORDINATED WITH THE MUNICIPAL ENGINEER & BE COMPLETED PER THE APPROPRIATE DETAIL ON THIS SHEET.
3. ALL EXCAVATION AND TRENCHING TO MEET OSHA REQUIREMENTS.

STORM DRAIN TRENCH & BEDDING

N.T.S.

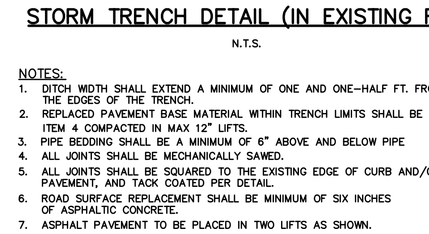

NOTE:
PROVIDE WATER TIGHT JOINT AT ALL INLET AND OUTLET PIPES AT ALL MANHOLES AND CATCH BASINS.

MANHOLE AND CATCH BASIN JOINT DETAIL

SCALE: N.T.S.

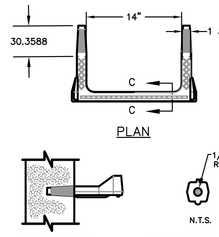

NOTES:

1. CATCH BASIN SHALL BE PRECAST CONCRETE, DESIGNED FOR H–20–44 VEHICULAR LOADING AND 30% IMPACT.
2. FRAME AND COVER SHALL BE DESIGNED FOR H–20–44 VEHICULAR LOADING AND 30% IMPACT.
3. CONCRETE CATCH BASIN CASTING CLEAR OPENING DIMENSION MUST MATCH FRAME AND GRATE. CLEAR OPENING DIMENSION (30"x48") FOR H–20–44 VEHICULAR LOADING.
4. CATCH BASINS HAVING A DEPTH GREATER THAN 48" FROM FINISHED SURFACE TO THE TOP OF THE CONCRETE BASE SHALL BE PROVIDED WITH STEPS.
5. BACKFILL USING SELECT MATERIAL, COMPACTED IN 6" LIFTS.
6. WHERE APPLICABLE AND IDENTIFIED WITH "HI" DESIGNATION ON THE PLANS, SUMP AND HOOD DIMENSIONS SHALL AS REQUIRED BY MANUFACTURER.
7. EXISTING CONNECTION TO BE ABANDONED AND CAPPED AT CATCH BASIN, MANHOLE, AT EXPOSED TRENCH CROSSING AS ORDERED BY ENGINEER. PIPE TO BE SEALED TO SATISFACTION OF ENGINEER BY USE OF BRICK AND MORTAR WITH CAP TO SEAL.

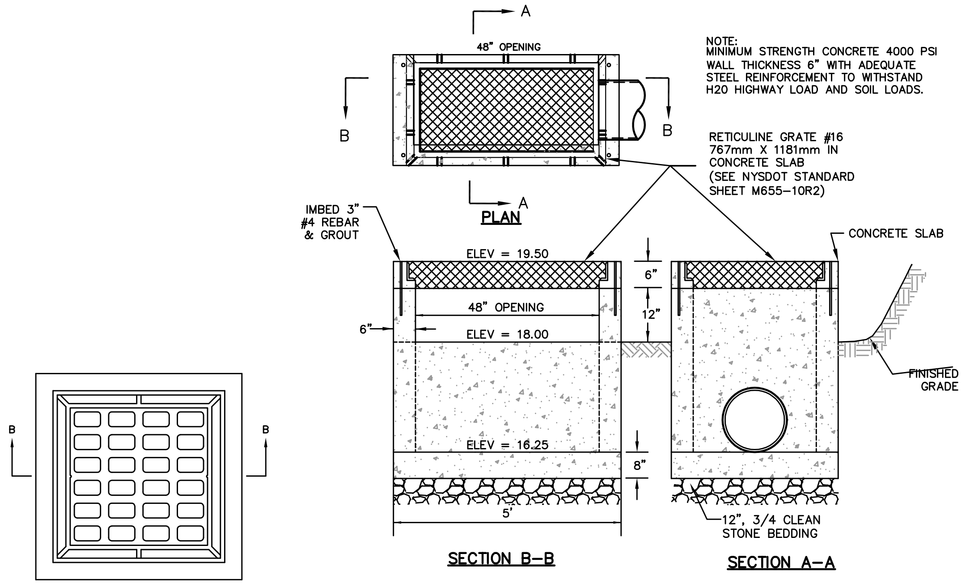

DRAIN INLET WITH WEIR DETAIL

N.T.S.

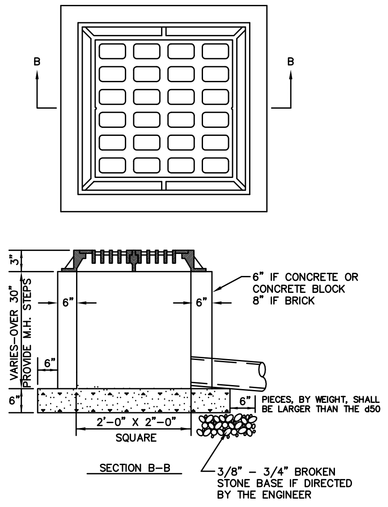

GENERAL CONSTRUCTION NOTES:

1. FOOTER TO BE CONCRETE.
2. INVERT TO BE 4000 PSI CONCRETE.
3. IF WALL CONSTRUCTION IS OTHER THAN CONCRETE, THE WALLS SHALL BE PLASTERED BOTH INSIDE AND OUTSIDE WITH 1/2" THICK CEMENT PLASTER.
4. FRAME AND GRATE TO BE #3193 AS MANUFACTURED BY CAMPBELL FOUNDRY CO., OR APPROVED EQUAL.
5. PROVIDE 3/4" DIAMETER W.I. LADDER RUNGS, 18" O.C. (IF OVER 30" DEEP)
6. EXTERIOR OF ALL CONCRETE SHALL HAVE 2 COATS OF KOPPERS BITUMASTIC #5, OR EQUAL.
7. ALL WORK SHALL BE WATERTIGHT.

YARD INLET

NOT FOR USE IN PAVED AREAS.
N.T.S.

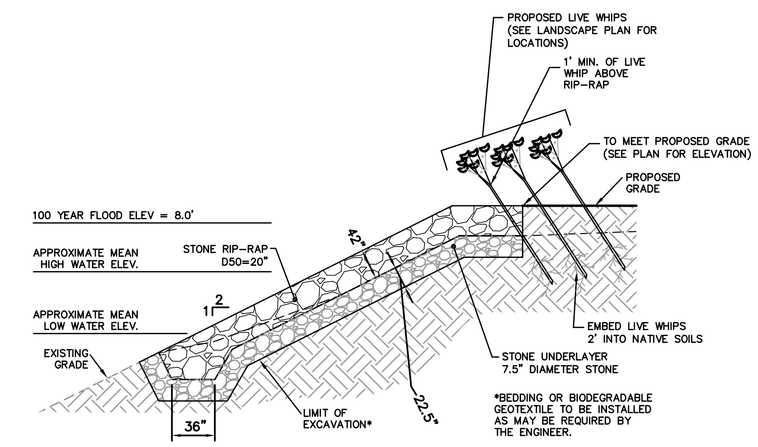

RIP–RAP SLOPE PROTECTION SECTION (WITH LIVE STAKES)

N.T.S.

NOTES:

1. RIP–RAP SLOPE PROTECTION TO BE PLACED TO ESTABLISH FINISHED GRADES. WHERE NECESSARY EXCAVATE EXISTING GROUND TO CONSTRUCT SLOPE PROTECTION TO APPROPRIATE DEPTH PER DETAIL.
2. LIVE WHIPS:
   A. SIZE: 1" DIA, X 6' LENGTH
   B. ANY LIVE WHIPS BROKEN DURING INSTALLATION SHALL BE REPLACED.
   C. DO NOT ALLOW WHIPS TO DRY–OUT. PRE–SOAK BEFORE PLANTING.

PLANT SCHEDULE

KEY	QTY.	BOTANICAL NAME	COMMON NAME	LENGTH	CALIPER	ROOT	REMARKS
SHORELINE SPECIES							
AC	*	AMELANCHIER CANADENSIS	SHADBLOW SERVICEBERRY	6'	3/4"	LIVE WHIP	4' O.C. MINIMUM
CA	*	CORNUS AMOMUM	SILKY DOGWOOD	6'	3/4"	LIVE WHIP	4' O.C. MINIMUM
SC	*	SAMBUCUS CANADENSIS	ELDERBERRY	6'	3/4"	LIVE WHIP	4' O.C. MINIMUM
VD	*	VIBURNUM DENTATUM	ARROWWOOD VIBURNUM	6'	3/4"	LIVE WHIP	4' O.C. MINIMUM

* QUANTITIES TO BE DETERMINED IN THE FIELD BASED ON FINAL SHORELINE SLOPE PROTECTION LIMITS.

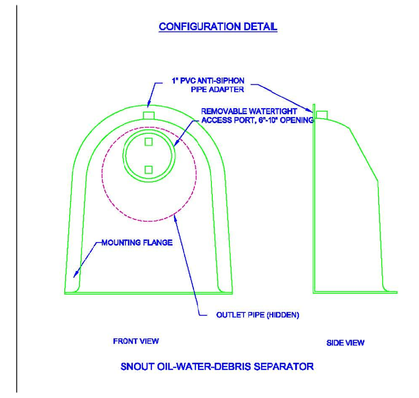

SNOUT OIL–WATER–DEBRIS SEPARATOR

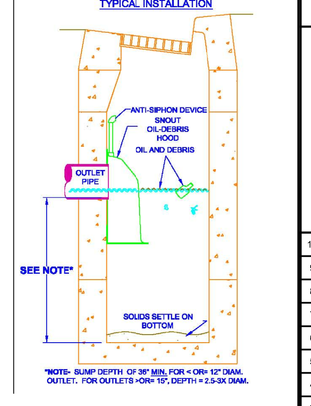

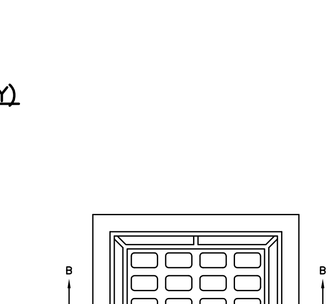

PLAN (MANHOLE TOP)

PLAN (DRAIN INLET TOP)

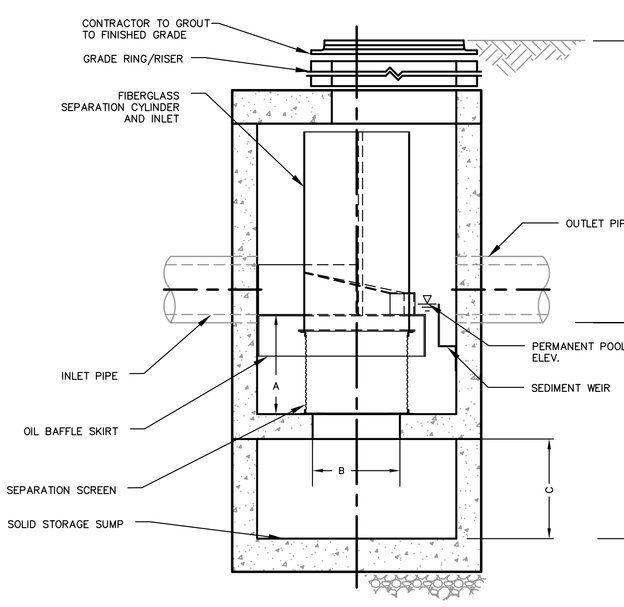

CONTECH CDS STRUCTURE

N.T.S.

Structure	CDS System	Typical Dimensions (Ft) (A)	(B)	(C)	(D)
CDS-2	CDS-6	3.54	1.75	2.00	6.21
CDS-3	CDS-8	4.58	2.33	3.00	8.25
CDS-4	CDS-6	2.00	1.75	2.00	4.50
CDS-5	CDS-8	4.58	2.33	3.00	8.25

CONTECH
CONTECH® ENGINEERED SOLUTIONS LLC
9025 Centre Pointe Dr. Suite 400, West Chester, OH 45069
800-338-1122 513-645-7000 513-645-7993 FAX

GENERAL NOTES:

1. CONTECH TO PROVIDE ALL MATERIALS UNLESS NOTED OTHERWISE.
2. FOR FABRICATION DRAWINGS WITH DETAILED STRUCTURE DIMENSIONS AND WEIGHTS, PLEASE CONTACT YOUR CONTECH STORMWATER SOLUTIONS REPRESENTATIVE.
3. www.contechstormwater.com
4. CDS WATER QUALITY STRUCTURE SHALL BE IN ACCORDANCE WITH ALL DESIGN DATA AND INFORMATION CONTAINED IN THIS DRAWING.
5. STRUCTURE AND CASTINGS SHALL MEET AASHTO HS20 LOAD RATING.
6. PVC HYDRAULIC SHEAR PLATE IS PLACED ON SHELF AT BOTTOM OF SCREEN CYLINDER. REMOVE AND REPLACE AS NECESSARY DURING MAINTENANCE CLEANING.

INSTALLATION NOTES:

1. ANY SUB–BASE, BACKFILL DEPTH, AND/OR ANTI–FLOTATION PROVISIONS ARE SITE–SPECIFIC DESIGN CONSIDERATIONS AND SHALL BE SPECIFIED BY ENGINEER OF RECORD.
2. CONTRACTOR TO PROVIDE EQUIPMENT WITH SUFFICIENT LIFTING AND REACH CAPACITY TO LIFT AND SET THE CDS MANHOLE STRUCTURE (LIFTING CLUTCHES PROVIDED).
3. CONTRACTOR TO ADD JOINT SEALANT BETWEEN ALL STRUCTURE SECTIONS, AND ASSEMBLE STRUCTURE.
4. CONTRACTOR TO PROVIDE, INSTALL, AND GROUT PIPES. MATCH PIPE INVERTS WITH ELEVATIONS SHOWN.
5. CONTRACTOR TO TAKE APPROPRIATE MEASURES TO ASSURE UNIT IS WATER TIGHT, HOLDING WATER TO FLOWLINE INVERT MINIMUM. IT IS SUGGESTED THAT ALL JOINTS BELOW PIPE INVERTS ARE GROUTED.

NOTES:

1. ALL HOODS AND TRAPS FOR CATCH BASINS AND WATER QUALITY STRUCTURES SHALL BE AS MANUFACTURED BY:
   BEST MANAGEMENT PRODUCTS, INC.
   53 MT. ARCHER RD.
   LYME, CT 06371
   (860) 434–0277, (860) 434–3195 FAX
   TOLL FREE: (800) 904–8008 OR (888) 354–7585
   WEB SITE: www.bestmp.com
   OR PRE–APPROVED EQUAL
2. ALL HOODS SHALL BE CONSTRUCTED OF A GLASS REINFORCED RESIN COMPOSITE WITH ISO GEL COAT EXTERIOR FINISH WITH A MINIMUM 0.125" LAMINATE THICKNESS.
3. ALL HOODS SHALL BE EQUIPPED WITH A WATERTIGHT ACCESS PORT, A MOUNTING FLANGE, AND AN ANTI–SIPHON VENT AS DRAWN. (SEE CONFIGURATION DETAIL)
4. THE SIZE AND POSITION OF THE HOOD SHALL BE DETERMINED BY OUTLET PIPE SIZE AS PER MANUFACTURER'S RECOMMENDATION.
5. THE BOTTOM OF THE HOOD SHALL EXTEND DOWNWARD A DISTANCE EQUAL TO 1/2 THE OUTLET PIPE DIAMETER WITH A MINIMUM DISTANCE OF 9" FOR PIPES <12" I.D.
6. THE ANTI–SIPHON VENT SHALL EXTEND ABOVE HOOD BY MINIMUM OF 3" AND A MAXIMUM OF 24" ACCORDING TO STRUCTURE CONFIGURATION.
7. THE SURFACE OF THE STRUCTURE WHERE THE HOOD IS MOUNTED SHALL BE FINISHED SMOOTH AND FREE OF LOOSE MATERIAL.
8. THE HOOD SHALL BE SECURELY ATTACHED TO STRUCTURE WALL WITH 3/8" STAINLESS STEEL BOLTS AND ANI–RESISTANT GASKET AS SUPPLIED BY MANUFACTURER. (SEE INSTALLATION DETAIL)
9. INSTALLATION INSTRUCTIONS SHALL BE FURNISHED WITH MANUFACTURER SUPPLIED INSTALLATION KIT.
   INSTALLATION KIT SHALL INCLUDE:
   A. INSTALLATION INSTRUCTIONS
   B. PVC ANTI–SIPHON VENT PIPE AND ADAPTER
   C. OIL–RESISTANT CRUSHED CELL FOAM GASKET WITH PSA BACKING
   D. 3/8" STAINLESS STEEL BOLTS
   E. ANCHOR SHIELDS

INSTALLATION DETAIL

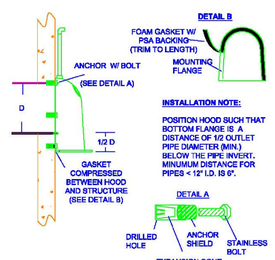

HOODED INVERT WATER QUALITY STRUCTURE DETAIL

N.T.S.

NOTE:
1. CONTRACTOR TO PROVIDE SHOP DRAWING TO PROJECT ENGINEER FOR REVIEW AND APPROVAL PRIOR TO INSTALLATION.

REV	DATE	DRAWN BY	DESCRIPTION
10	10/02/15	JJS	REVISIONS PER RAWP
9	08/27/15	JAP	REVISIONS PER DOH COMMENTS
8	07/10/15	JAP	REVISIONS PER DCDH COMMENTS
7	06/10/15	JJS	REVISIONS PER CITY RESOLUTION & DCHD COMMENTS
6	1/30/15	CMR	REVISIONS PER CITY RESOLUTION
5	10/29/14	JJS	REVISIONS PER CITY/TOWN/CLIENT COMMENTS
4	08/26/14	JJS	REVISIONS TO SITE PLAN PER TOWN COMMENTS
3	06/23/14	AT	REVISIONS TO SITE PLAN PER TOWN/CITY COMMENTS
2	03/18/14	AT	REVISIONS TO SITE PLAN PER CITY COMMENTS
1	01/21/14	AT	ADVANCED PLAN SET FOR PUBLIC HEARING

UNAUTHORIZED ALTERATION TO A MAP BEARING A LICENSED PROFESSIONAL ENGINEER'S SEAL IS A VIOLATION OF SECTION 7209, SUBDIVISION 2, OF THE NEW YORK STATE EDUCATION LAW. THIS CERTIFICATION IS NOT AN EXPRESS OR IMPLIED WARRANTY OR GUARANTEE, IT IS PURELY A STATEMENT OF PROFESSIONAL OPINION BASED ON KNOWLEDGE, INFORMATION AND BELIEF, BASED ON EXISTING FIELD EVIDENCE AND DOCUMENTARY EVIDENCE AVAILABLE. CERTIFICATIONS ARE NOT TRANSFERABLE TO ADDITIONAL INSTITUTIONS OR SUBSEQUENT OWNERS.

ANDREW B. FETHERSTON
NEW YORK STATE PROFESSIONAL ENGINEER LIC. NO. 073555

MASER CONSULTING P.A.
Consulting, Municipal & Environmental Engineers
Planners ■ Surveyors ■ Landscape Architects
State of N.Y. Certificate of Authorization: 0000172
New Jersey New York Pennsylvania Virginia
Customer Loyalty *through* Client Satisfaction

COPYRIGHT © 2013, MASER CONSULTING P.A.
ALL RIGHTS RESERVED
THIS DRAWING AND ALL THE INFORMATION CONTAINED HEREIN IS AUTHORIZED FOR USE ONLY BY THE PARTY FOR WHOM THE WORK WAS CONTRACTED OR TO WHOM IT IS CERTIFIED. THIS DRAWING MAY NOT BE COPIED, REUSED, DISCLOSED, DISTRIBUTED OR RELIED UPON FOR ANY OTHER PURPOSE WITHOUT THE EXPRESS WRITTEN CONSENT OF MASER CONSULTING P.A.

NEWBURGH OFFICE
1607 Route 300
Suite 101
Newburgh, NY 12550
Phone: 845.564.4495
Fax: 845.564.0278
email: solutions@maserconsulting.com

ONE DUTCHESS AVENUE
DRAINAGE DETAILS
FOR
THE O'NEILL GROUP-DUTTON, LLC
TAX LOTS 6062-02-763508 &
6062-59-766443
TOWN/CITY OF POUGHKEEPSIE DUTCHESS COUNTY NY

SCALE:	DATE:	DRAWN BY:	CHECKED BY:
AS SHOWN	06/13/13	JJS	ABF

PROJECT NUMBER: 07001417B NB001559

SHEET NUMBER: 19 of 26

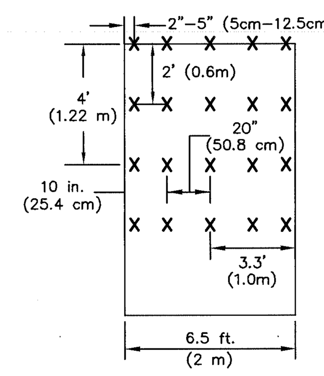

STAPLE PATTERN:
3.4 STAPLES/yd.^2 (4.1 STAPLES/m^2) USING 6 in. (15.2 cm), 11 ga. WIRE "U" STAPLES. 8 in (20.3 cm) STAPLES AND LONGER MAY BE USED FOR LOOSE SOILS. 9 ga. STAPLES OR HEAVIER MAY BE NECESSARY IN HARD OR ROCKY SOILS.

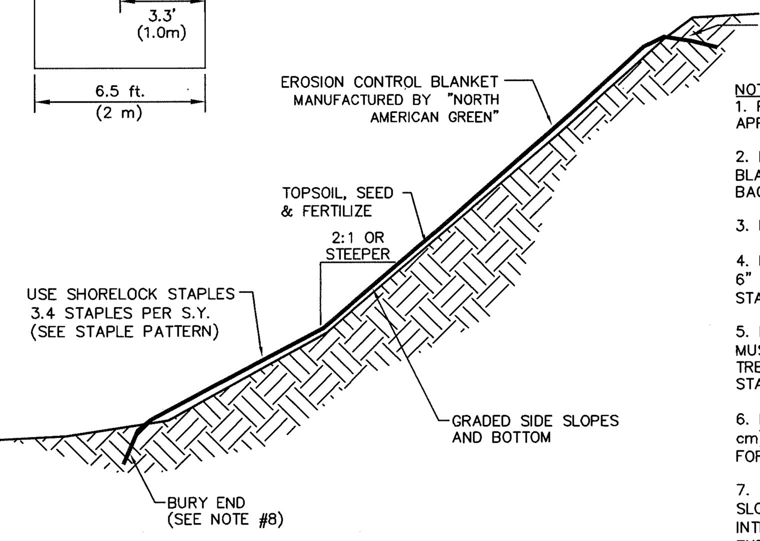

NOTE:
1. PREPARE SOIL BEFORE INSTALLING BLANKETS, INCLUDING APPLICATION OF TOPSOIL, FERTILIZER, AND SEED.
2. BEGIN AT THE TOP OF THE SLOPE BY ANCHORING THE BLANKET IN A 6" (15 cm) DEEP x 6" (15 cm) WIDE TRENCH. BACKFILL AND COMPACT THE TRENCH AFTER STAPLING.
3. ROLL BLANKETS IN DIRECTION OF WATER FLOW.
4. PLACE BLANKETS END OVER END (SHINGLE STYLE) WITH A 6" (15 cm) OVERLAP. USE A DOUBLE ROW OF STAGGERED STAPLES 4" (10cm) APART TO SECURE BLANKETS.
5. FULL LENGTH EDGE OF BLANKETS AT TOP OF SIDE SLOPES MUST BE ANCHORED IN 6" (15 cm) DEEP X 6" (15 cm) WIDE TRENCH. BACKFILL AND COMPACT THE TRENCH AFTER STAPLING.
6. BLANKETS ON SIDE SLOPES MUST BE OVERLAPPED 4" (10 cm) OVER THE CENTER BLANKET AND STAPLED [2" (5 cm) FOR C350 MATTING].
7. IN HIGH FLOW CHANNEL APPLICATIONS, A STAPLE CHECK SLOT IS RECOMMENDED AT 30 TO 40 FOOT (9 m TO 12 m) INTERVALS. USE A ROW OF STAPLES 4" (10 cm) APART OVER ENTIRE WIDTH OF THE CHANNEL. PLACE A SECOND ROW 4" (10 cm) BELOW THE FIRST ROW IN A STAGGERED PATTERN.
8. THE TERMINAL END OF THE BLANKETS MUST BE ANCHORED IN A 6" (15 cm) DEEP X 6" (15 cm) WIDE TRENCH. BACKFILL AND COMPACT THE TRENCH AFTER STAPLING.
9. EROSION CONTROL BLANKET SHALL BE MANUFACTURED BY "NORTH AMERICAN GREEN" EVANSVILLE, INDIANA; OR APPROVED EQUAL.
10. USE WHEN EARTHEN SLOPE IS EQUAL TO OR STEEPER THAN 2:1.

SEEDING NOTE:
1. FILL SECTIONS SHOULD BE STABILIZED AND SEEDED WITH PERMANENT SEED MIXTURES AS DESCRIBED IN THE GENERAL SOIL EROSION AND SEDIMENT CONTROL NOTES.
2. ROCK CUT SECTIONS SHOULD BE STABILIZED AND SEEDED WITH CROWNVETCH (CORONILLA VARIA L.)

SLOPE STABILIZATION DETAIL
N.T.S

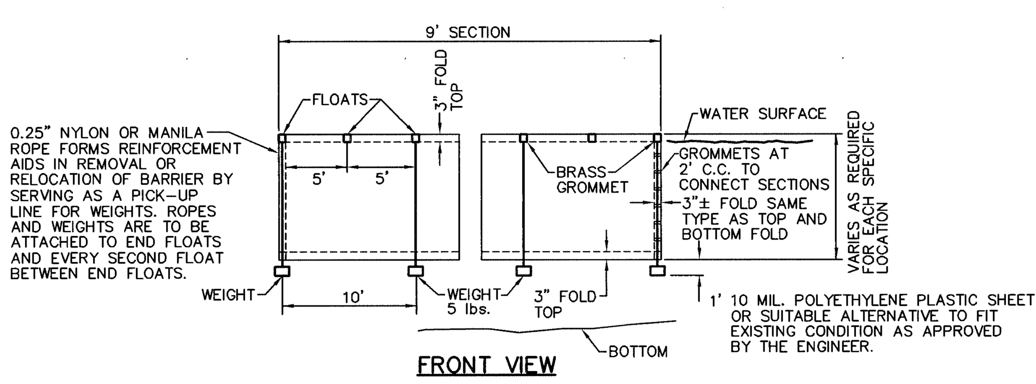

FRONT VIEW

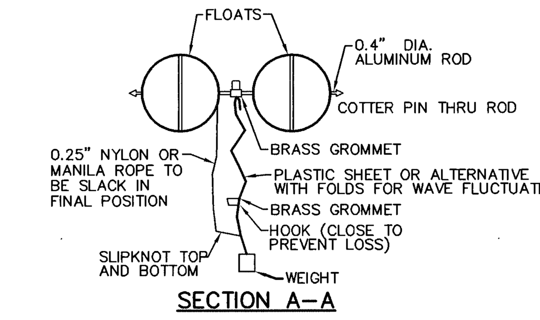

SECTION A–A

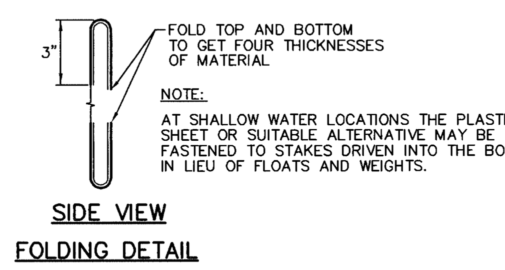

NOTE:
AT SHALLOW WATER LOCATIONS THE PLASTIC SHEET OR SUITABLE ALTERNATIVE MAY BE FASTENED TO STAKES DRIVEN INTO THE BOTTOM IN LIEU OF FLOATS AND WEIGHTS.

SIDE VIEW
FOLDING DETAIL

FLOATING TURBIDITY BARRIER
N.T.S.

GENERAL NOTES:
1. PLACE SILT BARRIER TO PREVENT DRIFTING OF SILT CAUSED BY DISCHARGE OF STORM SEWERS DURING CONSTRUCTION, DREDGING OR FILLING OPERATIONS.
2. EXACT PLACEMENT OF SILT BARRIER SHALL BE SO AS TO EFFECTIVELY CONTROL SILT DISPERSION UNDER THE CONDITIONS PRESENT ON A PARTICULAR PROJECT.
3. THE DETAILS SHOWN ON THIS SHEET ARE SUGGESTED METHODS ONLY ALTERNATIVE SOLUTION AND USAGE OF MATERIALS MAY BE USED AS APPROVED.

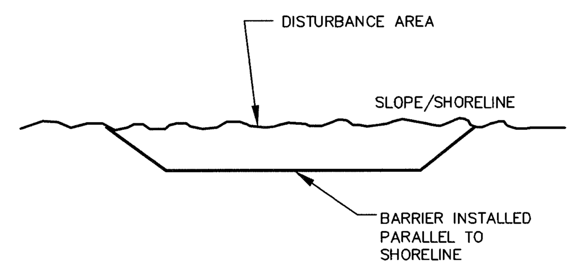

RIVER

NOTE:
TURBIDITY CURTAIN SHALL BE INSTALLED IN SUCH A MANNER TO COMPLETELY SURROUND ALL PROPOSED DISTURBANCE ACTIVITIES AND SHALL BE PHASED WITH THE WORK LINEARLY ALONG THE SHORELINE.

CONTAINMENT FROM IN-CHANNEL DISTURBANCE

PLACEMENT OF FLOATING TURBIDITY BARRIER
N.T.S.

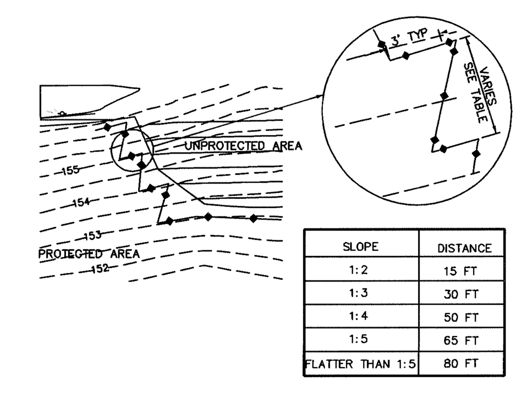

SLOPE	DISTANCE
1:2	15 FT
1:3	30 FT
1:4	50 FT
1:5	65 FT
FLATTER THAN 1:5	80 FT

SILT FENCE INSTALLATION
(WHEN NOT PARALLEL TO CONTOURS)
N.T.S.

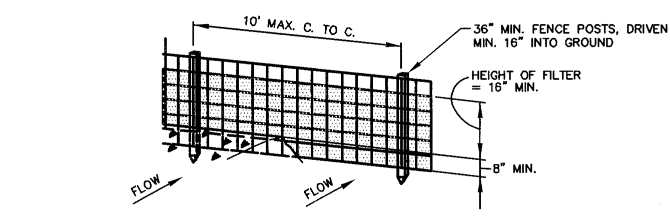

PERSPECTIVE VIEW

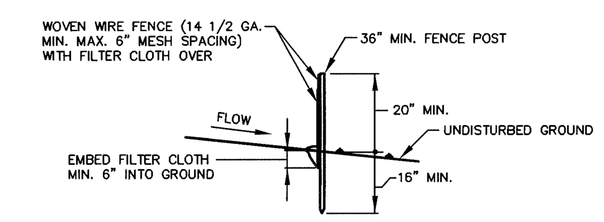

SECTION

CONSTRUCTION NOTES FOR FABRICATED SILT FENCE

1. WOVEN WIRE FENCE TO BE FASTENED SECURELY TO FENCE POSTS WITH WIRE TIES OR STAPLES.
2. FILTER CLOTH TO BE FASTENED SECURELY TO WOVEN WIRE FENCE WITH TIES SPACED EVERY 24" AT TOP AND MID SECTION.
3. WHEN TWO SECTIONS OF FILTER CLOTH ADJOIN EACH OTHER THEY SHALL BE OVERLAPPED BY SIX INCHES AND FOLDED.
4. MAINTENANCE SHALL BE PERFORMED AS NEEDED AND MATERIAL REMOVED WHEN "BULGES" DEVELOP IN THE SILT FENCE.

POSTS: STEEL EITHER "T" OR "U" TYPE OR 2" HARDWOOD.
FENCE: WOVEN WIRE 14 1/2 GA. 6" MAX. MESH OPENING.
FILTER CLOTH: FILTER X, MIRAFI 100X, STABILINKA T140N, OR APPROVED EQUAL.
PREFABRICATED UNIT: GEOFAB, ENVIROFENCE, OR APPROVED EQUAL.

WIRE REINFORCED SILT FENCE
N.T.S.

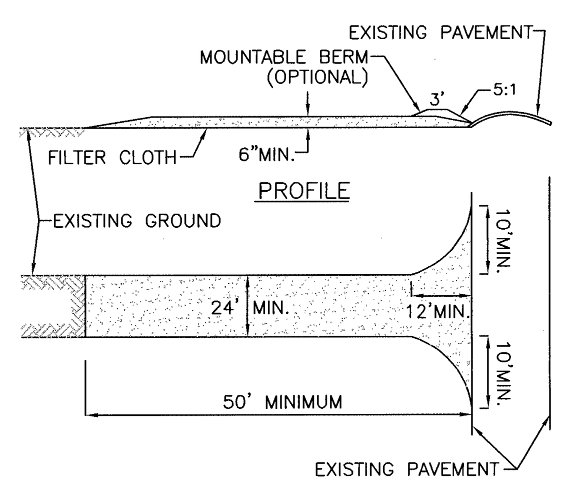

1. STONE SIZE – USE 2" STONE, OR RECLAIMED OR RECYCLED CONCRETE EQUIVALENT.
2. LENGTH – NOT LESS THAN 50 FEET
3. THICKNESS – NOT LESS THAN (6) INCHES.
4. WIDTH – 24'
5. FILTER CLOTH – WILL BE PLACED OVER THE ENTIRE AREA PRIOR TO PLACING OF STONE.
6. SURFACE WATER – ALL SURFACE WATER FLOWING OR DIVERTED TOWARD CONSTRUCTION ENTRANCES SHALL BE PIPED ACROSS THE ENTRANCE. IF PIPING IS IMPRACTICAL, A MOUNTING BERM WITH 5:1 SLOPES WILL BE PERMITTED.
7. MAINTENANCE – THE ENTRANCE SHALL BE MAINTAINED IN A CONDITION WHICH WILL PREVENT TRACKING OR FLOWING OF SEDIMENT ONTO PUBLIC RIGHTS-OF-WAY. ALL SEDIMENT SPILLED, DROPPED, WASHED OR TRACKED ONTO PUBLIC RIGHTS-OF-WAY MUST BE REMOVED IMMEDIATELY.
8. WHEN WASHING IS REQUIRED, IT SHALL BE DONE ON AN AREA STABILIZED WITH STONE AND WHICH DRAINS INTO AN APPROVED SEDIMENT TRAPPING DEVICE.
9. PERIODIC INSPECTION AND NEEDED MAINTENANCE SHALL BE PROVIDED AFTER EACH RAIN.

STABILIZED CONSTRUCTION ENTRANCE
N.T.S.

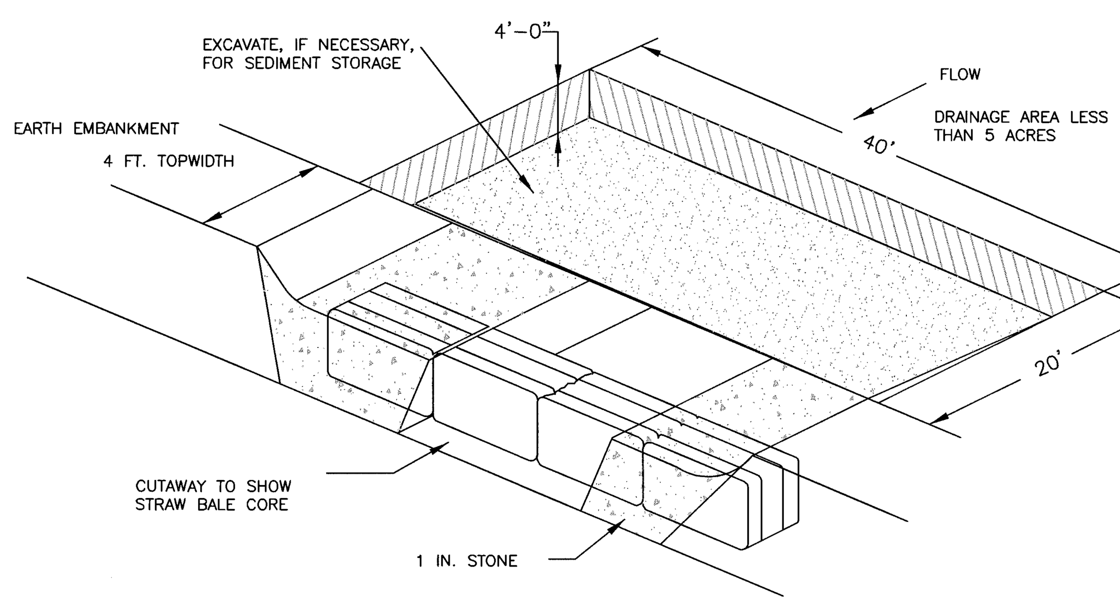

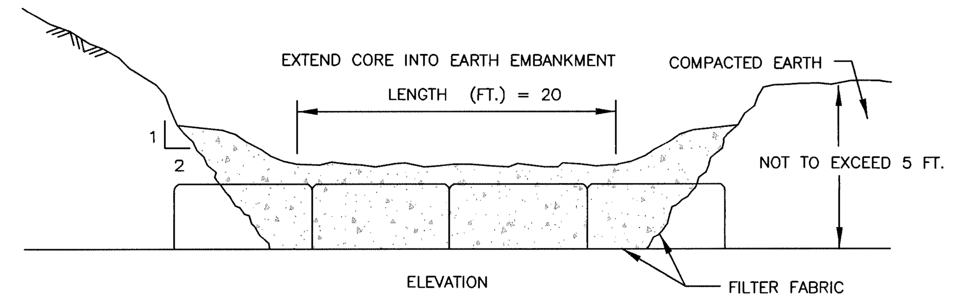

ELEVATION

TO BE INSTALLED PRIOR TO GRADING OR FILLING IN THE DRAINAGE AREA THEY ARE TO PROTECT. TRAPS THAT ARE TO FUNCTION DURING BUILDING CONSTRUCTION MUST NOT BE LOCATED WITHIN 20 FEET OF A PROPOSED BUILDING FOUNDATION. WHILE TRAPS SHOULD BE SITED TO MAXIMIZE STORAGE BENEFIT, THEY SHOULD NOT BE LOCATED WETLAND OR WETLAND BUFFER AREAS, OR IN EXISTING WATERCOURSES.

SEE EROSION AND SEDIMENT CONTROL PLAN FOR LOCATIONS.

INSTALLATION NOTES

1. AREA UNDER EMBANKMENT SHALL BE CLEARED, GRUBBED, AND STRIPPED OF ANY VEGETATION AND ROOT MAT. THE POOL AREA SHALL BE CLEARED AS WELL.
2. THE FILL MATERIAL FOR THE EMBANKMENT SHALL BE FREE OF ROOTS OR OTHER WOODY VEGETATION AS WELL AS OVER SIZED STONES, ROCKS, ORGANIC MATERIAL AND OTHER QUESTIONABLE MATERIAL. THE EMBANKMENT SHALL BE COMPACTED BY TRAVERSING WITH EQUIPMENT WHILE IT IS BEING CONSTRUCTED.
3. SEDIMENT SHALL BE REMOVED AND TRAP RESTORED TO ITS ORIGINAL DIMENSIONS WHEN THE SEDIMENT HAS ACCUMULATED TO 1/2 THE DESIGN DEPTH OF THE TRAP. REMOVED SEDIMENT SHALL BE DEPOSITED IN A SUITABLE AREA AND IN SUCH A MANNER THAT IT WILL NOT ERODE.
4. THE STRUCTURE SHALL BE INSPECTED AFTER EACH RAIN AND REPAIRS MADE AS NEEDED.
5. CONSTRUCTION OPERATIONS SHALL BE CARRIED OUT IN SUCH A MANNER THAT EROSION AND WATER POLLUTION IS MINIMIZED.
6. THE STRUCTURE SHALL BE REMOVED AND THE AREA STABILIZED WHEN THE DRAINAGE AREA HAS BEEN PROPERLY STABILIZED.
7. ALL CUT AND FILL SLOPES SHALL BE 1 : 2 OR FLATTER.
8. THE STONE USED IN THE OUTLET SHALL BE SMALL RIPRAP 4"–8" ALONG WITH A 1' THICKNESS OF 2" AGGREGATE PLACED ON THE UP GRADE SIDE ON THE SMALL RIPRAP OR EMBEDDED FILTER CLOTH IN THE RIPRAP.

STONE OUTLET SEDIMENT TRAP
N.T.S.

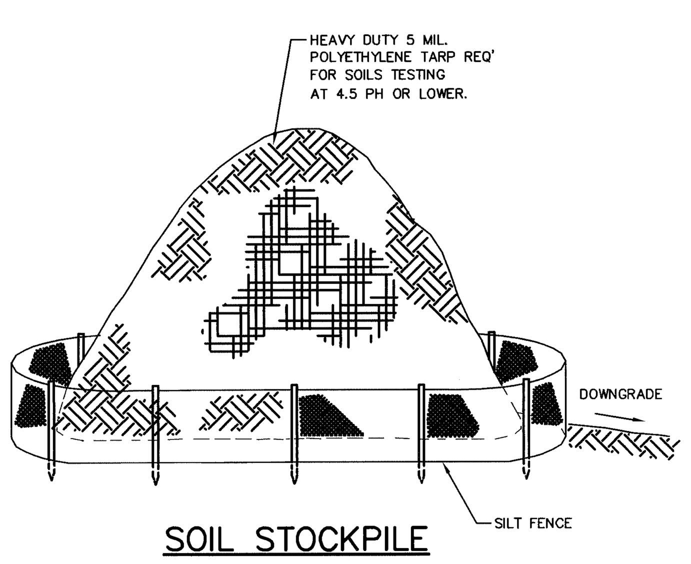

SOIL STOCKPILE
N.T.S.

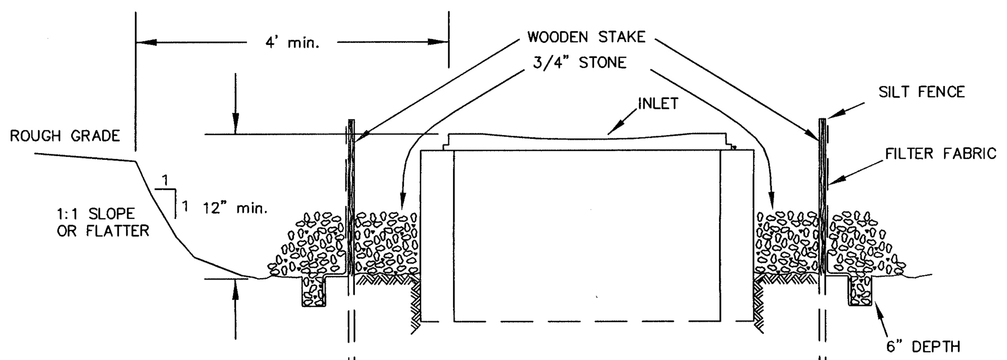

INSTALLATION NOTES

1. EXCAVATE A 6 INCH x 6 INCH TRENCH, OFFSET APPROXIMATELY 2 FEET FROM THE INLET PERIMETER.
2. UNROLL A SECTION AT A TIME AND POSITION THE POSTS AGAINST THE BACK (DOWNSTREAM) WALL OF THE TRENCH (NET SIDE AWAY FROM DIRECTION OF FLOW).
3. DRIVE THE POST INTO THE GROUND UNTIL THE NETTING IS APPROXIMATELY 2 INCHES FROM THE TRENCH BOTTOM.
4. LAY THE TOE-IN FLAP OF FABRIC ONTO THE UNDISTURBED BOTTOM OF THE TRENCH, BACKFILL THE TRENCH AND TAMP THE SOIL. STEEPER SLOPES REQUIRE AN INTERCEPT TRENCH.
5. JOIN SECTIONS AS SHOWN ABOVE. SUPPLEMENT WITH GRAVEL, PILED AGAINST THE FENCE.
6. SEDIMENT SHALL BE REMOVED AND THE TRAP RESTORED TO ITS ORIGINAL DIMENSIONS WHEN THE SEDIMENT HAS ACCUMULATED TO 1/2 THE DESIGN DEPTH OF THE TRAP.
7. THE STRUCTURE SHALL BE INSPECTED AFTER EACH RAIN AND REPAIRS MADE AS NEEDED.

STORM INLET SEDIMENT TRAP
N.T.S.

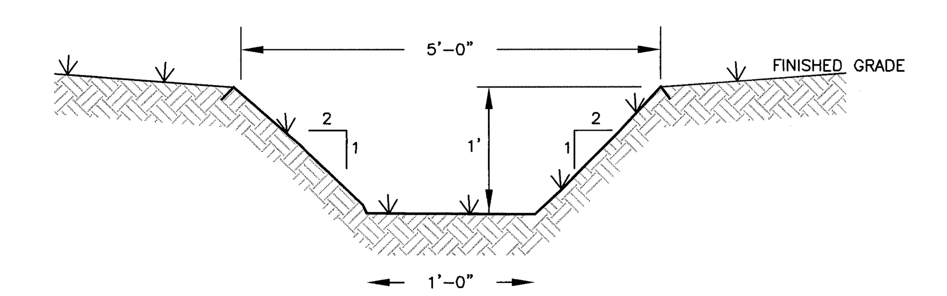

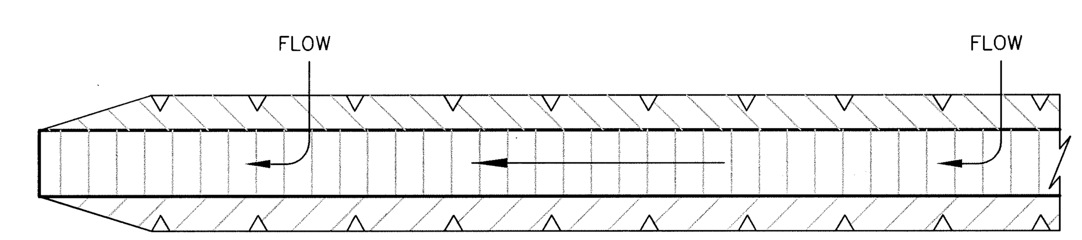

0.5% OR GREATER, DEPENDENT ON TOPOGRAPHY

PLAN

TO BE INSTALLED ABOVE DISTURBED AREAS, TO DIVERT RUNOFF OFF-SITE WITHOUT INCREASING EROSION; INTERMITTENTLY ACROSS DISTURBED AREAS, TO SHORTEN OVERLAND FLOW DISTANCES; BELOW DISTURBED AREAS, TO DIVERT SEDIMENT-LADEN WATER TO A SEDIMENT TRAPPING DEVICE; AND TO SAFELY TRANSPORT RUNOFF ALONG ROADWAYS.

SEE PLANS FOR LOCATIONS.

INSTALLATION NOTES

1. ALL SWALES SHALL HAVE UNINTERRUPTED POSITIVE GRADE TO AN OUTLET.
2. DIVERTED RUNOFF FROM A DISTURBED AREA SHALL BE CONVEYED TO A SEDIMENT TRAPPING DEVICE.
3. DIVERTED RUNOFF FROM AN UNDISTURBED AREA SHALL OUTLET DIRECTLY INTO AN UNDISTURBED STABILIZED AREA AT NON-EROSIVE VELOCITY.
4. ALL TREES, BRUSH, STUMPS, OBSTRUCTIONS AND OTHER OBJECTIONABLE MATERIAL SHALL BE REMOVED AND DISPOSED OF SO AS NOT TO INTERFERE WITH THE PROPER FUNCTIONING OF THE SWALE.
5. THE SWALE SHALL BE EXCAVATED OR SHAPED TO LINE, GRADE AND CROSS SECTION AS REQUIRED TO MEET THE CRITERIA SPECIFIED HEREIN AND BE FREE OF BANK PROJECTIONS OR OTHER IRREGULARITIES WHICH WILL IMPEDE NORMAL FLOW.
6. FILLS SHALL BE COMPACTED BY EARTH MOVING EQUIPMENT.
7. ALL EARTH REMOVED AND NOT NEEDED FOR CONSTRUCTION SHALL BE PLACED SO AS NOT TO INTERFERE WITH THE FUNCTIONING OF THE SWALE.
8. INSPECTION AND MAINTENANCE MUST BE PROVIDED AFTER EACH RAIN EVENT.
9. STABILIZATION SHALL BE SEED AND STRAW MULCH.

TEMPORARY SWALE
N.T.S.

REV	DATE	DRAWN BY	DESCRIPTION
9	08/27/15	JAP	REVISIONS PER DOH COMMENTS
8	07/10/15	JAP	REVISIONS PER DCDH COMMENTS
7	06/10/15	JJS	REVISIONS PER CITY RESOLUTION & DCHD COMMENTS
6	1/30/15	CMR	REVISIONS PER CITY RESOLUTION
5	10/29/14	JJS	REVISIONS PER CITY/TOWN/CLIENT COMMENTS
4	08/26/14	JJS	REVISIONS TO SITE PLAN PER TOWN COMMENTS
3	06/23/14	AT	REVISIONS TO SITE PLAN PER TOWN/CITY COMMENTS
2	03/18/14	AT	REVISIONS TO SITE PLAN PER CITY COMMENTS
1	01/21/14	AT	ADVANCED PLAN SET FOR PUBLIC HEARING

UNAUTHORIZED ALTERATION TO A MAP BEARING A LICENSED PROFESSIONAL ENGINEER'S SEAL IS A VIOLATION OF SECTION 7209, SUB-DIVISION 2, OF THE NEW YORK STATE EDUCATION LAW. THE CERTIFICATION IS NOT AN EXPRESS OR IMPLIED WARRANTY OR GUARANTEE, IT IS PURELY A STATEMENT OF PROFESSIONAL OPINION BASED ON KNOWLEDGE, INFORMATION AND BELIEF, BASED ON EXISTING FIELD EVIDENCE AND DOCUMENTARY EVIDENCE AVAILABLE. CERTIFICATIONS ARE NOT TRANSFERABLE TO ADDITIONAL INSTITUTIONS OR SUBSEQUENT OWNERS.

ANDREW B. FETHERSTON
NEW YORK STATE PROFESSIONAL ENGINEER LIC. NO. 073555

MASER CONSULTING P.A.
Consulting, Municipal & Environmental Engineers
Planners ▪ Surveyors ▪ Landscape Architects
State of N.Y. Certificate of Authorization: 0000172
New Jersey New York Pennsylvania Virginia
Customer Loyalty *through* Client Satisfaction

COPYRIGHT © 2013, MASER CONSULTING P.A.
ALL RIGHTS RESERVED
THIS DRAWING AND ALL THE INFORMATION CONTAINED HEREIN IS AUTHORIZED FOR USE ONLY BY THE PARTY FOR WHOM THE WORK WAS CONTRACTED OR TO WHOM IT IS CERTIFIED. THIS DRAWING MAY NOT BE COPIED, REUSED, DISCLOSED, DISTRIBUTED OR RELIED UPON FOR ANY OTHER PURPOSE WITHOUT THE EXPRESS WRITTEN CONSENT OF MASER CONSULTING P.A.

NEWBURGH OFFICE
1607 Route 300
Suite 101
Newburgh, NY 12550
Phone: 845.564.4495
Fax: 845.564.0278
email: solutions@maserconsulting.com

ONE DUTCHESS AVENUE
EROSION CONTROL DETAIL SHEET
FOR
THE O'NEILL GROUP-DUTTON, LLC
TAX LOTS 6062-02-763508 & 6062-59-766443
TOWN/CITY OF POUGHKEEPSIE DUTCHESS COUNTY NY

SCALE:	DATE:	DRAWN BY:	CHECKED BY:
AS SHOWN	06/13/13	JJS	ABF

PROJECT NUMBER: 07001417B NB001556

COPYRIGHT © 2010, MASER CONSULTING P.A.–ALL RIGHTS RESERVED
THIS DRAWING AND ALL THE INFORMATION CONTAINED HEREIN IS AUTHORIZED FOR USE ONLY BY THE PARTY FOR WHOM THE WORK WAS CONTRACTED OR TO WHOM IT IS CERTIFIED. THIS DRAWING MAY NOT BE COPIED, REUSED, DISCLOSED, DISTRIBUTED OR RELIED UPON FOR ANY OTHER PURPOSE WITHOUT THE EXPRESS WRITTEN CONSENT OF MASER CONSULTING, P.A.

Engineers
Planners
Surveyors
Landscape Architects
Environmental Scientists

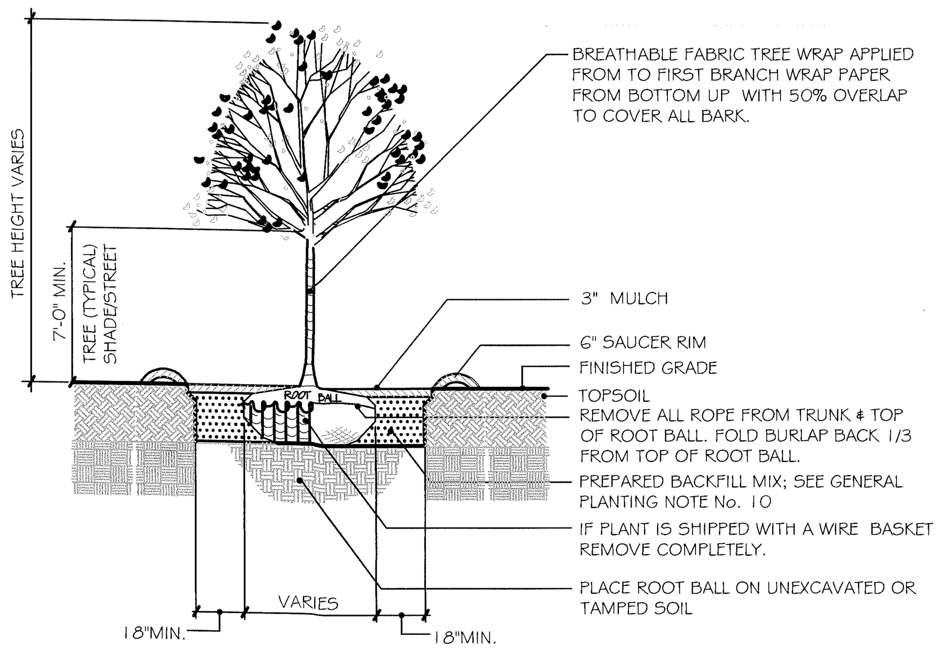

DECIDUOUS TREE PLANTING DETAIL

NOT TO SCALE

NOTES

1. NO SOIL OR MULCH SHALL BE PLACED AGAINST ROOT COLLAR OF PLANT. MULCH SHALL NOT TOUCH THE TREE TRUNK.
2. PLANTING DEPTH SHALL BE THE SAME OR HIGHER AS GROWN IN NURSERY.
3. WIRE BASKETS AND NON-JUTE BURLAP MUST BE ENTIRELY REMOVED FROM THE ROOT BALL. JUTE BURLAP MUST BE REMOVED FROM THE TOP 1/3 OF THE ROOT BALL.
4. DEPTH OF PLANT PIT SHALL BE INCREASED BY 12" WHEREVER POOR SOIL CONDITIONS OCCUR, WITH THE ADDITION OF LOOSE AGGREGATE.

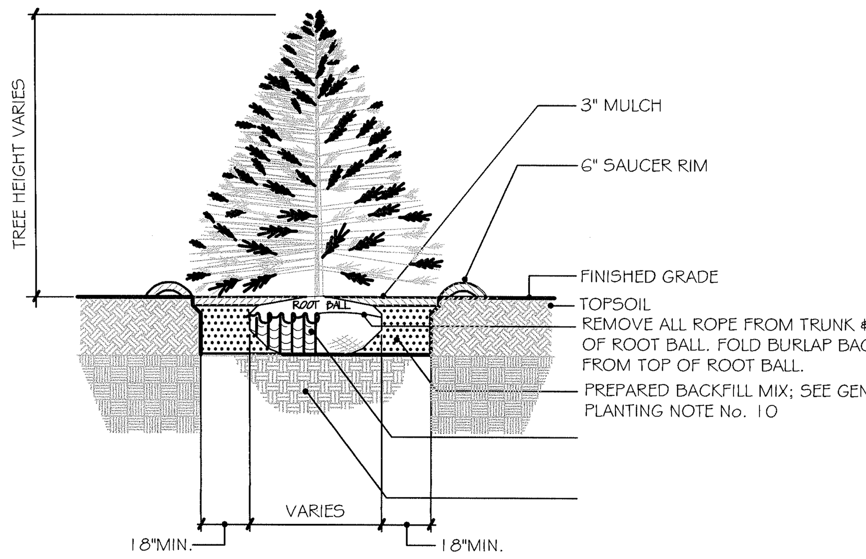

EVERGREEN TREE PLANTING DETAIL

NOT TO SCALE

NOTES

1. NO SOIL OR MULCH SHALL BE PLACED AGAINST ROOT COLLAR OF PLANT. MULCH SHALL NOT TOUCH THE TREE TRUNK.
2. PLANTING DEPTH SHALL BE THE SAME OR HIGHER AS GROWN IN NURSERY.
3. WIRE BASKETS AND NON-JUTE BURLAP MUST BE ENTIRELY REMOVED FROM THE ROOT BALL. JUTE BURLAP MUST BE REMOVED FROM THE TOP 1/3 OF THE ROOT BALL.
4. DEPTH OF PLANT PIT SHALL BE INCREASED BY 12" WHEREVER POOR SOIL CONDITIONS OCCUR, WITH THE ADDITION OF LOOSE AGGREGATE.

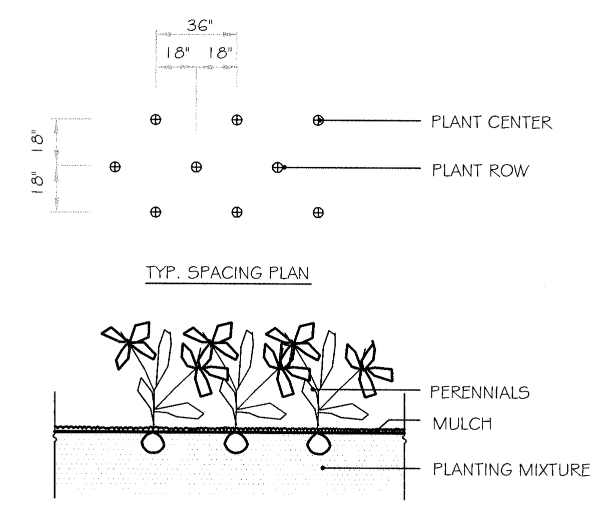

PERENNIAL / GRASS PLANTING

NOT TO SCALE

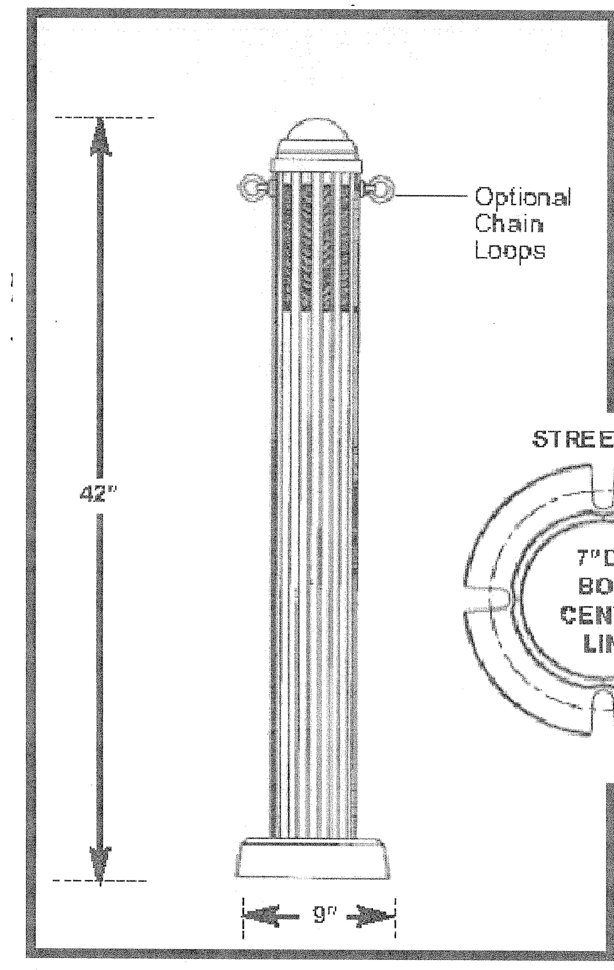

STERNBERG 3801LB-42"-MHP50-MED208-*-DBT
42" PARKSIDE LIGHTED BOLLARD

PARKSIDE LIGHTED BOLLARD

NOT TO SCALE

NOTES:

1. LUMINAIRES, POLE AND BASE TO BE MANUFACTURED BY STERNBERG.
2. CONTRACTOR TO PROVIDE SHOP DRAWINGS OF LIGHT FIXTURES FOR REVIEW AND APPROVAL BY THE PROJECT LANDSCAPE ARCHITECT.
3. FOOTING TO BE DESIGNED, SIGNED, AND SEALED BY A NYS LICENSED ENGINEER.
4. * – VOLTAGE TO BE PROVIDED BY ELECTRICIAN.

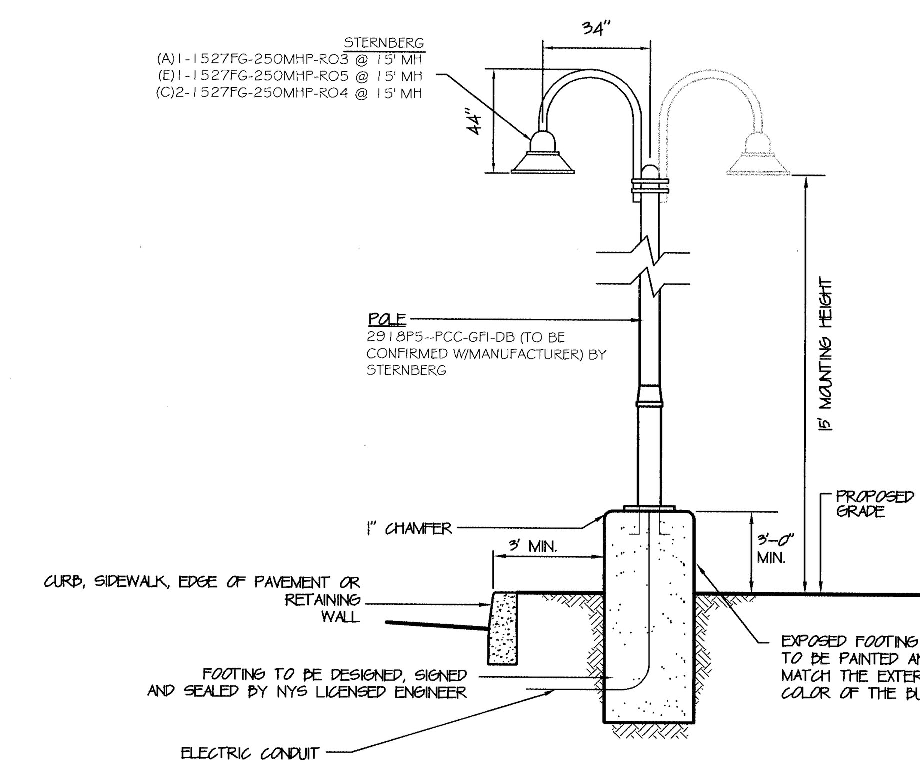

POLE MOUNTED FIXTURE DETAIL – FIXTURE A, C & E

NOT TO SCALE

NOTES:

1. LUMINAIRES, POLE AND BASE TO BE MANUFACTURED BY STERNBERG.
2. CONTRACTOR TO PROVIDE SHOP DRAWINGS OF LIGHT FIXTURES FOR REVIEW AND APPROVAL BY THE PROJECT LANDSCAPE ARCHITECT.
3. FOOTING TO BE DESIGNED, SIGNED, AND SEALED BY A NYS LICENSED ENGINEER.
4. * – VOLTAGE TO BE PROVIDED BY ELECTRICIAN.

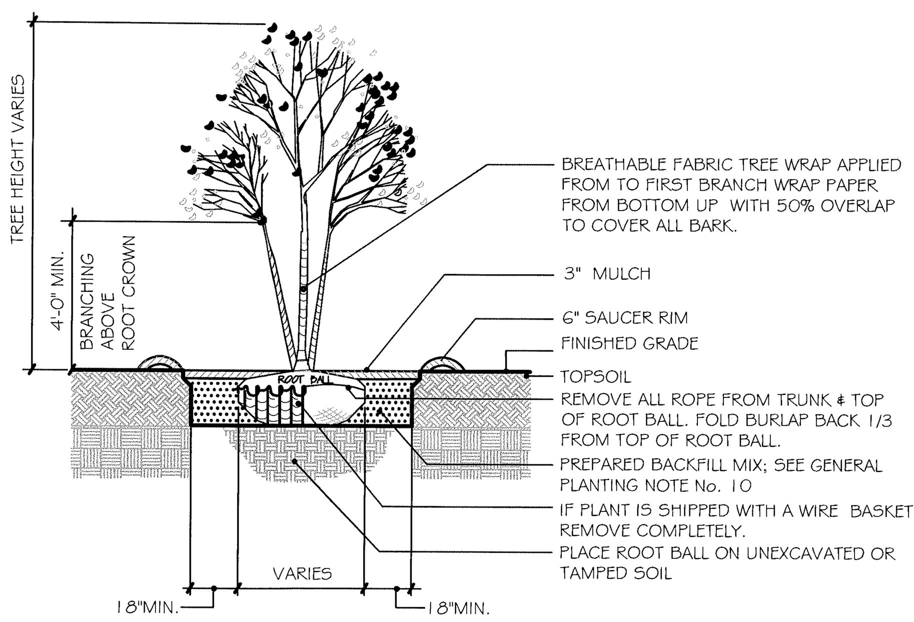

MULTI-STEM TREE PLANTING DETAIL

NOT TO SCALE

NOTES

1. NO SOIL OR MULCH SHALL BE PLACED AGAINST ROOT COLLAR OF PLANT. MULCH SHALL NOT TOUCH THE TREE TRUNK.
2. PLANTING DEPTH SHALL BE THE SAME OR HIGHER AS GROWN IN NURSERY.
3. WIRE BASKETS AND NON-JUTE BURLAP MUST BE ENTIRELY REMOVED FROM THE ROOT BALL. JUTE BURLAP MUST BE REMOVED FROM THE TOP 1/3 OF THE ROOT BALL.
4. DEPTH OF PLANT PIT SHALL BE INCREASED BY 12" WHEREVER POOR SOIL CONDITIONS OCCUR, WITH THE ADDITION OF LOOSE AGGREGATE.

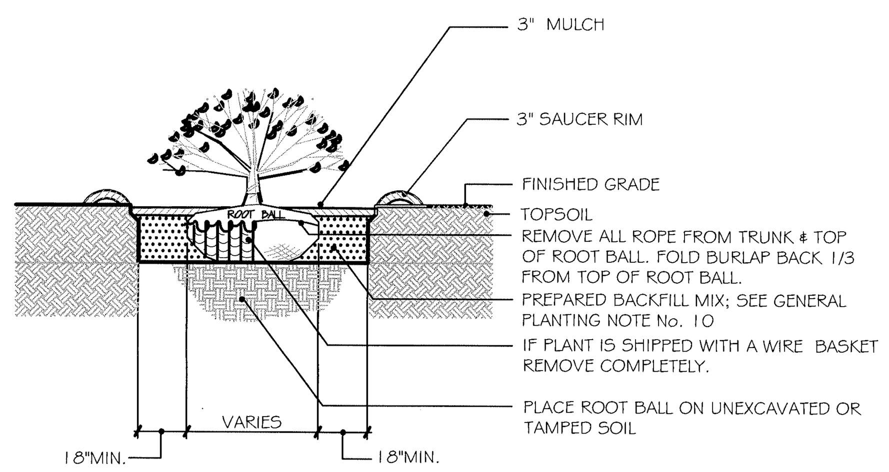

SHRUB PLANTING DETAIL

NOT TO SCALE

NOTES

1. NO SOIL OR MULCH SHALL BE PLACED AGAINST ROOT COLLAR OF PLANT. MULCH SHALL NOT TOUCH THE TREE TRUNK.
2. PLANTING DEPTH SHALL BE THE SAME OR HIGHER AS GROWN IN NURSERY.
3. WIRE BASKETS AND NON-JUTE BURLAP MUST BE ENTIRELY REMOVED FROM THE ROOT BALL. JUTE BURLAP MUST BE REMOVED FROM THE TOP 1/3 OF THE ROOT BALL.
4. DEPTH OF PLANT PIT SHALL BE INCREASED BY 12" WHEREVER POOR SOIL CONDITIONS OCCUR, WITH THE ADDITION OF LOOSE AGGREGATE.

PLANT DETAIL NOTES

1. CONTRACTOR SHALL PARTIALLY FILL WITH WATER A REPRESENTATIVE NUMBER OF PITS IN EACH AREA OF THE PROJECT PRIOR TO PLANTING TO DETERMINE IF THERE IS ADEQUATE PERCOLATION. IF PIT DOESN'T PERCOLATE, MEASURES MUST BE TAKEN TO ASSURE PROPER DRAINAGE BEFORE PLANTING.
2. PLANTING MUST BE GUARANTEED FOR TWO FULL GROWING SEASONS FROM THE TIME OF FINAL ACCEPTANCE BY THE LANDSCAPE CONSULTANT. CONTRACTOR SHALL REMOVE ALL WRAPPING AT THE END OF GUARANTEE PERIOD.
3. BACKFILL MIXTURE TO BE SPECIFIED BASED UPON SOIL TEST AND CULTURAL REQUIREMENTS OF PLANT.
4. PRUNE DAMAGED AND CONFLICTING BRANCHES MAINTAINING NORMAL TREE SHAPE, NEVER CUT CENTRAL TRUNK OR LEADER.

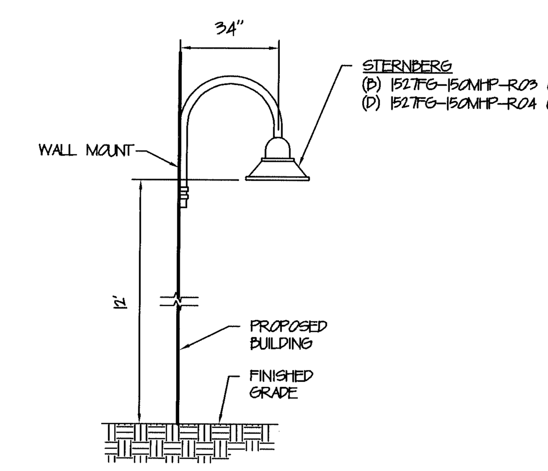

WALL MOUNTED FIXTURE DETAIL – B & D

NOT TO SCALE

NOTES:

1. LUMINAIRES TO BE MANUFACTURED BY STERNBERG.
2. CONTRACTOR TO PROVIDE SHOP DRAWINGS OF LIGHT FIXTURES FOR REVIEW AND APPROVAL BY THE PROJECT LANDSCAPE ARCHITECT.
3. * – VOLTAGE TO BE PROVIDED BY ELECTRICIAN.

GENERAL PLANTING NOTES

1. THIS PLAN SHALL BE USED FOR LANDSCAPE PLANTING PURPOSES ONLY. EXAMINE ALL ENGINEERING DRAWINGS AND FIELD CONDITIONS FOR SPECIFIC LOCATIONS OF UTILITIES AND STRUCTURES AND NOTIFY THE LANDSCAPE ARCHITECT OF ANY DISCREPANCIES OR LOCATION CONFLICTS PRIOR TO PLANTING INSTALLATION.
2. THE CONTRACTOR IS RESPONSIBLE TO LOCATE AND VERIFY LOCATION OF ALL UTILITIES ON SITE PRIOR TO CONSTRUCTION.
3. ALL PLANT MATERIAL SHALL CONFORM TO GUIDELINES AS SET FORTH IN THE LATEST EDITION OF THE AMERICAN ASSOCIATION OF NURSERYMEN'S STANDARD FOR NURSERY STOCK OR THE PLANT MATERIAL WILL BE UNACCEPTABLE. ALL PLANT MATERIAL SHALL BE TRUE TO SPECIES, VARIETY, SIZE AND BE CERTIFIED DISEASE AND INSECT FREE. THE OWNER AND/OR THE LANDSCAPE ARCHITECT RESERVES THE RIGHT TO APPROVE ALL PLANT MATERIAL ON SITE PRIOR TO INSTALLATION.
4. NO PLANT SUBSTITUTIONS SHALL BE PERMITTED WITH REGARD TO SIZE, SPECIES, OR VARIETY WITHOUT WRITTEN PERMISSION OF THE LANDSCAPE CONSULTANT FOR THE MUNICIPALITY. WRITTEN PROOF OF PLANT MATERIAL UNAVAILABILITY MUST BE DOCUMENTED.
5. THE LOCATION OF ALL PLANT MATERIAL INDICATED ON THE LANDSCAPE PLANS ARE APPROXIMATE. THE FINAL LOCATION OF ALL PLANT MATERIAL AND PLANTING BED LINES SHALL BE DETERMINED IN THE FIELD UNDER THE DIRECTION OF THE LANDSCAPE ARCHITECT. NO SHADE TREE, STREET TREE, ORNAMENTAL FLOWERING TREE OR EVERGREEN TREE SHALL BE PLANTED CLOSER THAN 10' FROM ANY SIDEWALK, DRIVEWAY, CURB OR UTILITY LOCATION UNLESS SPECIFICALLY DIMENSIONED ON THE LANDSCAPE PLAN OR INSTALLED WITH PHYSICAL ROOT BARRIER.
6. ALL STREET TREES AND SHADE TREES PLANTED NEAR PEDESTRIAN OR VEHICULAR ACCESS SHOULD NOT BE BRANCHED LOWER THAN 8'-0" ABOVE GRADE. ALL PLANT MATERIAL LOCATED WITHIN SIGHT TRIANGLE EASEMENTS SHALL NOT EXCEED A MATURE HEIGHT OF 30" ABOVE THE ELEVATION OF THE ADJACENT CURB. ALL STREET TREES PLANTED IN SIGHT TRIANGLE EASEMENTS SHALL BE PRUNED TO NOT HAVE BRANCHES BELOW 10'-0".
7. THE PLANTING PLAN SHALL TAKE PRECEDENCE OVER THE PLANT SCHEDULE SHOULD ANY PLANT QUANTITY DISCREPANCIES OCCUR.
8. ALL PLANT MATERIAL SHALL BE PROPERLY INSTALLED IN CONFORMANCE WITH THE TYPICAL PLANTING DETAILS. INSTALL ALL PLANT MATERIAL ON UNDISTURBED GRADE. PROVIDE BURLAP WRAPPING WITH A 50% OVERLAP. CUT AND REMOVE JUTE BURLAP FROM TOP ONE-THIRD OF THE ROOT BALL. WIRE BASKETS AND AND NOT JUTE BURLAP SHALL BE COMPLETELY REMOVED PRIOR TO BACKFILLING THE PLANT PIT.
9. BRANCHES OF DECIDUOUS TREES SHALL BE PRUNED BACK BY NO MORE THAN ONE QUARTER (1/4) TO BALANCE THE TOP GROWTH WITH ROOTS AND TO PRESERVE THEIR CHARACTER AND SHAPE. THE CENTRAL LEADER OF TREE SHALL NOT BE PRUNED.
10. PROVIDE PLANTING PITS AS INDICATED ON PLANTING DETAILS. BACKFILL PLANTING PITS WITH ONE PART EACH OF TOPSOIL, PEAT MOSS AND PARENT MATERIAL. IF WET SOIL CONDITIONS EXIST THEN PLANTING PITS SHALL BE EXCAVATED AN ADDITIONAL 12" AND FILLED WITH CRUSHED STONE.
11. ALL PLANT MATERIAL SHALL BEAR THE SAME RELATION TO FINISHED GRADE AS IT BORE TO EXISTING GRADE AT NURSERY.
12. OPTIMUM PLANTING TIME:
DECIDUOUS - APRIL 1 TO JUNE 1 & OCTOBER 15 TO DECEMBER 15.
CONIFEROUS - APRIL 1 TO JUNE 1 & SEPTEMBER 1 TO NOVEMBER 1.
13. NEWLY INSTALLED PLANT MATERIAL SHALL BE WATERED AT THE TIME OF INSTALLATION. REGULAR WATERING SHALL BE PROVIDED TO ENSURE THE ESTABLISHMENT, GROWTH AND SURVIVAL OF ALL PLANTS.
14. ALL PLANT MATERIAL SHALL BE GUARANTEED FOR TWO YEARS AFTER THE DATE OF FINAL ACCEPTANCE. ANY PLANT MATERIAL THAT DIES WITHIN THAT TIME PERIOD SHALL BE REMOVED, INCLUDING THE STUMP, AND REPLACED BY A TREE OF SIMILAR SIZE AND SPECIES AT NO EXPENSE TO THE DEVELOPER.
15. THE LANDSCAPE CONTRACTOR SHALL PROVIDE A MINIMUM 6" LAYER OF TOPSOIL IN ALL LAWN AREAS AND A MINIMUM OF 12" OF TOPSOIL IN ALL PLANTING AREAS. A FULL SOIL ANALYSIS SHALL BE CONDUCTED AFTER CONSTRUCTION AND PRIOR TO PLANTING TO DETERMINE THE EXTENT OF SOIL AMENDMENT REQUIRED. SOIL PH SHOULD BE 5.5-6.5.
16. ALL DISTURBED LAWN AREAS SHALL BE STABILIZED WITH EITHER SOD OR SEED AS INDICATED ON THE LANDSCAPE PLANS. SOD SHALL CONSIST OF A NEW YORK CERTIFIED MIXTURE. TEMPORARY SEEDING SHALL BE IN ACCORDANCE WITH THE SOIL EROSION AND SEDIMENT CONTROL PLAN, WHILE PERMANENT SEEDING SHALL BE IN ACCORDANCE WITH THE SEEDING NOTES ON THIS SHEET. ALL DISTURBED LAWN AREAS SHALL BE TOPSOILED, LIMED, FERTILIZED AND FINE GRADED PRIOR TO LAWN INSTALLATION.
17. ALL PLANTING BEDS SHALL RECEIVE 3" OF RED BARN GRAVEL MULCH.
18. ALL SHRUB MASSES SHALL BE PLANTED IN CONTINUOUS MULCHED BEDS.
19. ALL EXISTING TREES AND SHRUBS TO BE PRESERVED ON SITE SHALL BE PROTECTED AGAINST CONSTRUCTION DAMAGE BY SNOW FENCING. ALL FENCING SHALL BE PLACED OUTSIDE THE INDIVIDUAL TREE CANOPY. ALL TREES TO REMAIN SHALL BE IDENTIFIED IN THE FIELD PRIOR TO COMMENCEMENT OF CONSTRUCTION. TREE PROTECTION FENCING SHALL BE INSTALLED PRIOR TO COMMENCEMENT OF CONSTRUCTION, GRADING OR CLEARING. ALL EXISTING VEGETATION BEING PRESERVED AND LOCATED AT THE EDGE OF THE NEW TREELINE, SHALL BE PRUNED AND TRIMMED TO REMOVE ALL DEAD, DISEASED, OR DAMAGED BRANCHES.
20. ALL PLANTING DEBRIS (WIRE, TWINE, RUBBER HOSE, BACKFILL ETC.) SHALL BE REMOVED FROM THE SITE AFTER PLANTING IS COMPLETE. PROPERTY IS TO BE LEFT IN A NEAT ORDERLY CONDITION IN ACCORDANCE WITH ACCEPTED PLANTING PRACTICES.

GENERAL SEEDING NOTES

1. TEMPORARY SEEDING SHALL CONSIST OF PERENNIAL RYEGRASS APPLIED AT A RATE OF 1.0 LBS. PER 1000 SF OR SPRING OATS APPLIED AT A RATE OF 2.0 LBS. PER 1000 SF. TEMPORARY SEEDING SHALL BE MULCHED AND MAINTAINED UNTIL DISTURBED AREAS ARE PERMANENTLY STABILIZED WITH PERMANENT SEEDING.
2. PERMANENT SEEDING SHALL CONSIST OF THE FOLLOWING MIXTURE OR APPROVED EQUAL - OPTIMUM SEEDING DATES ARE BETWEEN APRIL 1 AND MAY 31: AND AUGUST 16 AND OCTOBER 15. ALL SEED RATES ARE PURE LIVE SEED (PLS) AMOUNTS.

MIXTURE -	HARD FESCUE	120 LBS/ACRE
	PERENNIAL RYE GRASS	30 LBS/ACRE
	KENTUCKY BLUE GRASS (BLEND)	40 LBS/ACRE
MIXTURE -	TALL FESCUE	160 LBS/ACRE
	PERENNIAL RYE GRASS (BLEND)	20 LBS/ACRE
	KENTUCKY BLUE GRASS (BLEND)	20 LBS/ACRE

FLOODPLAIN MIX BY ERNST SEEDS (ERNMX-154):

SPECIES LIST:	25%	VIRGINIA WILDRYE
	19%	BIG BLUESTEM, 'NIAGRA'
	15%	SWITCHGRASS, 'SHAWNEE'
	12%	LURID (SHALLOW) SEDGE
	10%	FOX SEDGE
	4%	BLUE VERVAIN
	3%	SOFT RUSH
	2%	SWAMP MILKWEED
	2%	BONESET
	2%	OXEYE SUNFLOWER
	2%	SHOWY TICKTREFOIL
	1.5%	JOE PYE WEED
	1.5%	WILD BERGAMOT
	0.5%	GREAT BLUE LOBELIA
	0.5%	NARROWLEAF BLUE EYED GRASS

FLOODPLAIN MIX APPLIED BY RAKING OR DRILLING INTO THE SOILS AT A RATE OF 20 LBS. PER ACRE WITH A COVER CROP OF GRAIN RYE AT 30 LBS. PER ACRE.

3. PERMANENT SEEDING TO BE APPLIED BY RAKING OR DRILLING INTO THE SOILS AT A RATE OF 150# PER ACRE, SLOPED AREA TO BE COVERED WITH MULCH AS INDICATED IN NOTE 5.
4. FERTILIZER FOR THE ESTABLISHMENT OF TEMPORARY AND PERMANENT VEGETATIVE COVER SHALL BE IN COMPLIANCE WITH THE LATEST NYSDEC REGULATIONS. A SOIL TEST PRIOR TO FERTILIZER APPLICATION IS RECOMMENDED. FLOODPLAIN SEED MIXTURE SHALL NOT BE FERTILIZED.
5. IF SEASON PREVENTS THE ESTABLISHMENT OF TEMPORARY OR PERMANENT SEEDING, EXPOSED AREA TO BE STABILIZED WITH MULCH AS INDICATED IN NOTE 6.
6. MULCH TO CONSIST OF SMALL GRAIN STRAW OR SALT HAY ANCHORED WITH A WOOD AND FIBER MULCH BINDER OR AN APPROVED EQUAL. MULCH WILL BE SPREAD AT RATES OF 90 TO 115 LBS. PER 1000 SF AND ANCHORED WITH A MULCH ANCHORING TOOL OR LIQUID MULCH BINDER, AND SHALL BE PROVIDED ON ALL SEEDINGS. HYDROMULCH SHALL ONLY BE USED DURING OPTIMUM GROWING SEASONS.
7. AS NEEDED, WORK LIME AND FERTILIZER INTO SOIL AS NEARLY AS PRACTICAL TO A DEPTH OF 4 INCHES WITH A DISC, SPRINGTOOTH HARROW, OR OTHER SUITABLE EQUIPMENT. THE FINAL HARROWING OR DISCING OPERATION SHOULD BE ON ON THE GENERAL CONTOUR. CONTINUE TILLAGE UNTIL A REASONABLY UNIFORM, FINE SEEDBED IS PREPARED. ALL BUT CLAY OR SILTY SOILS AND COARSE SANDS SHOULD BE ROLLED TO FIRM THE SEEDBED WHEREVER FEASIBLE.
8. REMOVE FROM THE SURFACE ALL STONES TWO INCHES OR LARGER IN ANY DIMENSION. REMOVE ALL OTHER DEBRIS, SUCH AS WIRE, CABLE, TREE ROOTS, PIECES OF CONCRETE, CLODS, LUMPS, OR OTHER UNSUITABLE MATERIAL.
9. INSPECT SEEDBED JUST BEFORE SEEDING. IF TRAFFIC HAS LEFT THE SOIL COMPACTED, THE AREA MUST BE RETILLED AND FIRMED AS ABOVE.

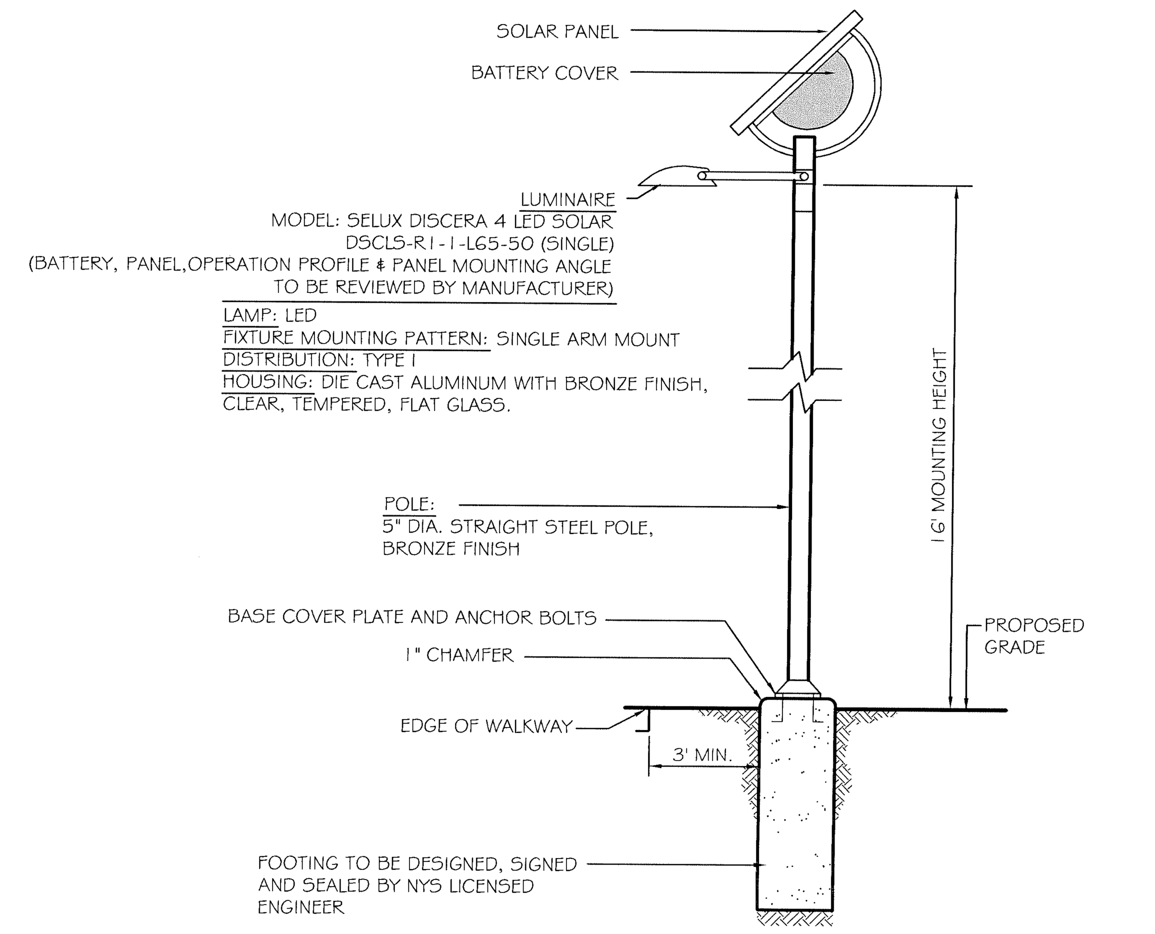

POLE MOUNTED GREENWAY TRAIL LIGHT FIXTURE DETAIL

NOT TO SCALE

NOTES:

1. LUMINAIRES AND POLES TO BE MANUFACTURED BY SELUX LIGHTING.
2. CONTRACTOR TO PROVIDE SHOP DRAWINGS OF LIGHT FIXTURES FOR REVIEW AND APPROVAL BY THE PROJECT LANDSCAPE ARCHITECT.
3. FOOTING TO BE DESIGNED, SIGNED, AND SEALED BY A N.Y.S. LICENSED ENGINEER.
4. * - VOLTAGE TO BE PROVIDED BY ELECTRICIAN.
5. CONFIRM WIND LOAD REQUIREMENTS WITH MANUFACTURER.

REV	DATE	DRAWN BY	DESCRIPTION
9	08/27/15	JAP	REVISIONS PER DOH COMMENTS
8	07/10/15	JAP	REVISIONS PER DCDH COMMENTS
7	06/10/15	JJS	REVISIONS PER CITY RESOLUTION & DCHD COMMENTS
6	1/30/15	CMR	REVISIONS PER CITY RESOLUTION
5	10/29/14	JJS	REVISIONS PER CITY/TOWN/CLIENT COMMENTS
4	08/26/14	JJS	REVISIONS TO SITE PLAN PER TOWN COMMENTS
3	06/23/14	AT	REVISIONS TO SITE PLAN PER TOWN/CITY COMMENTS
2	03/18/14	AT	REVISIONS TO SITE PLAN PER CITY COMMENTS
1	01/21/14	AT	ADVANCED PLAN SET FOR PUBLIC HEARING

UNAUTHORIZED ALTERATION TO A MAP BEARING A LICENSED PROFESSIONAL ENGINEER'S SEAL IS A VIOLATION OF SECTION 7209, SUB-DIVISION 2, OF THE NEW YORK STATE EDUCATION LAW. THE CERTIFICATION IS NOT AN EXPRESS OR IMPLIED WARRANTY OR GUARANTEE, IT IS PURELY A STATEMENT OF PROFESSIONAL OPINION BASED ON KNOWLEDGE, INFORMATION AND BELIEF, BASED ON EXISTING FIELD EVIDENCE AND DOCUMENTARY EVIDENCE AVAILABLE. CERTIFICATIONS ARE NOT TRANSFERABLE TO ADDITIONAL INSTITUTIONS OR SUBSEQUENT OWNERS.

ANDREW B. FETHERSTON
NEW YORK PROFESSIONAL ENGINEER LIC. NO. 073555

MASER CONSULTING P.A.
Consulting, Municipal & Environmental Engineers
Planners ▪ Surveyors ▪ Landscape Architects
State of N.Y. Certificate of Authorization: 0000172

New Jersey New York Pennsylvania Virginia
Customer Loyalty *through* Client Satisfaction

COPYRIGHT © 2013, MASER CONSULTING P.A.
ALL RIGHTS RESERVED

THIS DRAWING AND ALL THE INFORMATION CONTAINED HEREIN IS AUTHORIZED FOR USE ONLY BY THE PARTY FOR WHOM THE WORK WAS CONTRACTED OR TO WHOM IT IS CERTIFIED. THIS DRAWING MAY NOT BE COPIED, REUSED, DISCLOSED, DISTRIBUTED OR RELIED UPON FOR ANY OTHER PURPOSE WITHOUT THE EXPRESS WRITTEN CONSENT OF MASER CONSULTING P.A.

NEWBURGH OFFICE
1607 Route 300
Suite 101
Newburgh, NY 12550
Phone: 845.564.4495
Fax: 845.564.0278
email: solutions@maserconsulting.com

ONE DUTCHESS AVENUE
LANDSCAPE AND LIGHTING DETAILS
FOR
THE O'NEILL GROUP-DUTTON, LLC
TAX LOTS 6062-02-763508 & 6062-59-766443
TOWN/CITY OF POUGHKEEPSIE DUTCHESS COUNTY NY

SCALE:	DATE:	DRAWN BY:	CHECKED BY:
AS NOTED	06/13/13	JJS	ABF

PROJECT NUMBER: 07001417B NB001558

SHEET NUMBER: 21 of 26

Engineers
Planners
Surveyors
Landscape Architects
Environmental Scientists

MASER CONSULTING P.A.

Engineers
Planners
Surveyors
Landscape Architects
Environmental Scientists

1607 Route 300, Suite 101
Newburgh, NY 12550
T: 845.564.4495
F: 845.564.0278
www.maserconsulting.com

May 29, 2015

VIA UPS

Jodi MacDonald
Chief, Regulatory Branch USACE
New York District
Jacob J. Javits Federal Building
26 Federal Plaza, Room 1947
New York, NY 102178-0090

Re: One Dutchess Avenue
MC Project No. 07001417B

Dear Ms. MacDonald:

On behalf of The O'Neill Group – Dutton LLC, Dutchess Avenue Riverwalk LLC, and Dutchess Avenue Riverwalk North LLC (the Client), we respectfully submit this request for a Jurisdictional Determination for the above referenced property. Enclosed please find the attached jurisdiction determination package for your review and approval for the above reference project.

As part of this Jurisdictional Request, we have enclosed the following items for your use and review:

- Joint Application Form, dated 4/20/15;
- Rip Rap Design Calculations;
- Rip Rap Slope Protection Sections;
- Partial Site Plan Set of the Applicable Sections, last revised 1/30/15.

If you have any questions, please don't hesitate to call. Thank you for your consideration.

Very truly yours,

MASER CONSULTING P.A.

Raymond Walker, Ph.D.
Director, Ecological Services

RW/jm

cc: File, w/o attachments
Finbarr O'Neill

\\NBCAD\Projects\2007\07001417B\Letters\2015\150528RW-USACOE.docx

MASER CONSULTING P.A.

Engineers
Planners
Surveyors
Landscape Architects
Environmental Scientists

1607 Route 300, Suite 101
Newburgh, NY 12550
T: 845.564.4495
F: 845.564.0278
www.maserconsulting.com

January 15, 2015

Greg Bolner, P.E.
City of Poughkeepsie Engineering Dept.
62 Civic Center Plaza
Poughkeepsie, NY 12601

Joseph Dennis, P.E.
Town of Poughkeepsie Engineering Dept.
1 Overocker Road
Poughkeepsie, NY 12603

RE: One Dutchess Avenue
Hudson River Shoreline Armoring
MC Project# 07001417B

Dear Mr. Bolner and Mr. Dennis:

Maser Consulting has prepared the attached calculations for the riprap design for the Hudson River Shoreline Protection. This includes 5 pages of hand calculations and several relevant pages from the USACE Shore Protection Manual (1984) used in the design.

The following assumptions were made in this calculation:

- 2H:1V slope
- Design wave height, H, of 4 ft (based on wave height information from Stevens Institute of Technology and considering storm-generated waves)
- Graded riprap (not a uniform sized armor stone)

Based on the calculations, the minimum thickness of the cover layer is 3.5 feet and comprised of riprap with a W_{50} of approx. 530 lbs (20 in.), a W_{max} of 2136 lbs (32 in.) and W_{min} of 68 lbs (10 in.). This should be placed on an underlayer that is a minimum of 22.5 inches thick and comprised of 7.5 inch diameter stone ($W_{50}/20$) and the gradation should meet $D_{15(cover)} \leq 5\ D_{85\ (under).}$

We recommend that the geotextile be placed between the existing subgrade and the underlayer stone.

Very truly yours,

MASER CONSULTING P.A.

Andrew B. Fetherston, P.E., CPESC, CPSWQ, CFM
Principal Associate

ABF/jm
cc: Finbar O'Neill, w/attachment
Lou Kaufman, w/attachment
File, w/attachment

\\NBCAD\Projects\2007\07001417B\Reports\HR Shoreline Armoring\cover letter to calcs.docx

Determination of Weight of Armor Units for Revetment

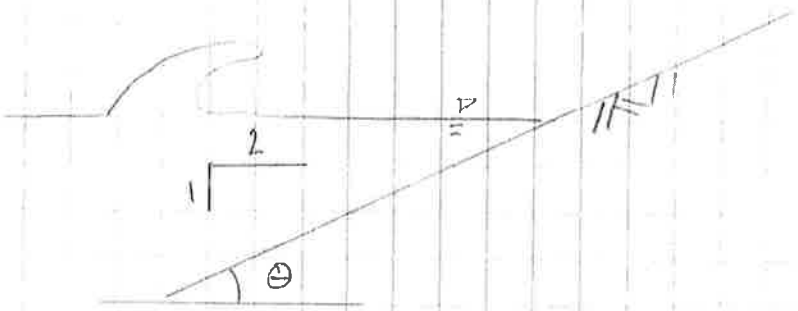

Ref: USACE Shore Protection Manual, 1984

Cover Layer Design

$$W = \frac{w_r H^3}{K_D (S_r - 1)^3 \cot\theta} \qquad \text{(eq 7-116)}$$

where: W = weight of individual armor unit in primary layer

w_r = unit weight of armor unit

H = design wave height

S_r = specific gravity of armor unit

$S_r = w_r / w_w$

w_w = unit weight of water

θ = angle of structure slope

K_D = stability coefficient (Table 7-8)

* Eq. 7-116 is used for the determination of armor units of nearly uniform size.

For graded riprap armor stone, Hudson & Jackson (1962) modified the equation to:

$$W_{50} = \frac{W_r H^3}{K_{RR}(S_r - 1)^3 \cot\theta} \quad \text{(eq 7-117)}$$

where W_{50} = weight of the 50 percent size in gradation. The maximum weight is $4 W_{50}$ and the minimum is $0.125 W_{50}$

K_{RR} = stability coefficient for angular, graded riprap (Table 7-8); values allow for 5% damage

* the use of graded riprap is generally more applicable to revetments and design where heights less than 5 ft.

- For H = 4 ft
  (based on information collected by Stevens Institute of Technology, typical wave heights are on the order of 1 to 2 ft and storms on the order of 3 to 4 ft, for conservatism, use 4 ft)

  2H:1V slope ; $\cot\theta = 2$

  $w_r = 165$ pcf (for granite)

  $S_r = 2.65$

  $K_{RR} = 2.2$

$$W_{50} = \frac{w_r H^3}{K_{RR}(S_r - 1)^3 \cot\theta}$$

$$= \frac{(165\ lb/ft^3)(4\ ft)^3}{2.2(2.65-1)^3\ 2}$$

$$= \frac{10560\ lb}{19.77} = 534\ lbs$$

$W_{50} = 534$ lbs

$W_{max} = 4 W_{50} = 2136$ lbs

$W_{min} = 0.125 W_{50} \approx 68$ lbs

from Table 7-12, Weight and size selection dimension of quarrystone

diameter in feet for ~ 534 lbs = 1.70 ft (≈ 20 inches)

~ 2136 lbs = 2.69 ft (≈ 32 inches)

~ 68 lbs = 10.2 inches

Thickness of Armor Layer

The thickness, r, of riprap is the greatest of:

- 0.30 m or (~1 ft)
- $r = 2.0\left(\frac{W_{50}}{w_r}\right)^{1/3}$ (eq 7-123) or
- $r = 1.25\left(\frac{W_{max}}{w_r}\right)^{1/3}$ (eq 7-124)

for W_{50}

$$r = 2.0\left(\frac{534}{165}\right)^{1/3} = 2.95\,ft$$

for W_{max}

$$r = 1.25\left(\frac{2136}{165}\right)^{1/3} = 2.93\,ft$$

since the values are basically the same, recommend a minimum thickness of 3 ft for the primary riprap layer.

however, USACE SPM recommends that the thickness be at least 2 x diameter, so based on d_{50} = 20 inches, the thickness of the layer should be 40 inches = 3.5 ft

Underlayer

- for a graded riprap cover layer, a conservative underlayer may be constructed with a 50 percent size of $W_{50}/20$

$$\frac{W_{50}}{20} = \frac{534}{20} \approx 27 \text{ lbs} \quad (d \approx 7.5 \text{ inch})$$

and the gradation should meet the following criteria

$$D_{15(cover)} \leq 5 D_{85(under)}$$

- Underlayer Thickness:
  - should be at least 3 50 percent size thick.
  - can be calculated using Eq 7-123 with a coefficient of 3 instead of 2

$$r = 3.0 \left(\frac{W_{50}}{w_r} \right)^{1/3}$$

$$= 3 \left(\frac{27}{165} \right)^{1/3} = 1.64 \text{ ft} = 19 \text{ inches}$$

$3 \times 7.5 \text{ inches} = \underline{22.5 \text{ inches}} \leftarrow$ use this

Haug

SHORE PROTECTION MANUAL

VOLUME II

Coastal Engineering Research Center

DEPARTMENT OF THE ARMY
Waterways Experiment Station, Corps of Engineers
3909 Halls Ferry Road
Vicksburg, Mississippi 39180-6199

1984
Second Printing

Approved For Public Release; Distribution Unlimited

Prepared for
DEPARTMENT OF THE ARMY
US Army Corps of Engineers
Washington, DC 20314

US Army Corps of Engineers

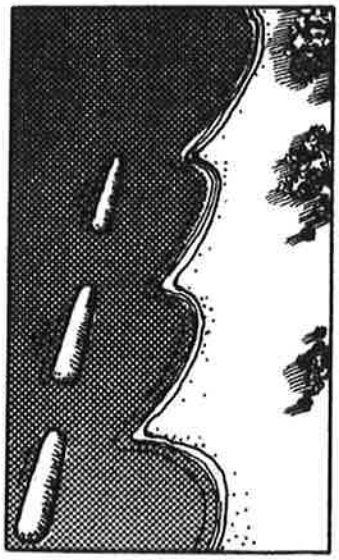

COASTAL ENGINEERING RESEARCH CENTER

The crest of a structure designed to be submerged, or that might be submerged by hurricane storm surge, will undergo the heaviest wave action when the crest is exposed in the trough of a wave. The highest wave which would expose the crest can be estimated by using Figure 7-69, with the range of depths at the structure d, the range of wave heights H, and period T, and the structure height h. Values of $\frac{\eta_c}{H}$, where η_c is the crest elevation above the still-water level, can be found by entering Figure 7-69 with $\frac{H}{gT^2}$ and $\frac{d}{gT^2}$. The largest breaking and nonbreaking wave heights for which

$$d \leq h + H - \eta_c \tag{7-114}$$

can then be used to estimate which wave height requires the heaviest armor. The final design breaking wave height can be determined by entering Figure 7-69 with values of $\frac{d}{gT^2}$, finding values of $\frac{\eta_c}{H}$ for breaking conditions, and selecting the highest breaking wave which satisfied the equation

$$d = h + H - \eta_c \tag{7-115}$$

A structure that is exposed to a variety of water depths, especially a structure perpendicular to the shore, such as a groin, should have wave conditions investigated for each range of water depths to determine the highest breaking wave to which any part of the structure will be exposed. The outer end of a groin might be exposed only to wave forces on its sides under normal depths, but it might be overtopped and eventually submerged as a storm surge approaches. The shoreward end might normally be exposed to lower breakers, or perhaps only to broken waves. In the case of a high rubble-mound groin (i.e., a varying crest elevation and a sloping beach), the maximum breaking wave height may occur inshore of the seaward end of the groin.

c. Hydraulics of Cover Layer Design. Until about 1930, design of rubble structures was based only on experience and general knowledge of site conditions. Empirical formulas that subsequently developed are generally expressed in terms of the stone weight required to withstand design wave conditions. These formulas have been partially substantiated in model studies. They are guides and must be used with experience and engineering judgment. Physical modeling is often a cost-effective measure to determine the final cross-section design for most costly rubble-mound structures.

Following work by Iribarren (1938) and Iribarren and Nogales Y Olano (1950), comprehensive investigations were made by Hudson (1953, 1959, 1961a, and 1961b) at the U.S. Army Engineer Waterways Experiment Station (WES), and a formula was developed to determine the stability of armor units on rubble structures. The stability formula, based on the results of extensive small-scale model testing and some preliminary verification by large-scale model testing, is

$$W = \frac{w_r H^3}{K_D (S_r - 1)^3 \cot \theta} \qquad (7\text{-}116)$$

where

W = weight in newtons or pounds of an individual armor unit in the primary cover layer. (When the cover layer is two quarrystones in thickness, the stones comprising the primary cover layer can range from about 0.75 W to 1.25 W, with about 50 percent of the individual stones weighing more than W . The gradation should be uniform across the face of the structure, with no pockets of smaller stone. The maximum weight of individual stones depends on the size or shape of the unit. The unit should not be of such a size as to extend an appreciable distance above the average level of the slope)

w_r = unit weight (saturated surface dry) of armor unit in N/m^3 or lb/ft^3. Note: Substitution of ρ_r , the mass density of the armor material in kg/m^3 or $slugs/ft^3$, will yield W in units of mass (kilograms or slugs)

H = design wave height at the structure site in meters or feet (see Sec. III,7,b)

S_r = specific gravity of armor unit, relative to the water at the structure ($S_r = w_r / w_w$)

w_w = unit weight of water: fresh water = 9,800 N/m^3 (62.4 lb/ft^3) seawater = 10,047 N/m^3 (64.0 lb/ft^3) Note: Substitution of $\left(\frac{Pr - P_w}{pw}\right)^3$, where p_w is the mass density of water at the structure for $(Sr - 1)^3$, yields the same result

θ = angle of structure slope measured from horizontal in degrees

K_D = stability coefficient that varies primarily with the shape of the armor units, roughness of the armor unit surface, sharpness of edges, and degree of interlocking obtained in placement (see Table 7-8).

Equation 7-116 is intended for conditions when the crest of the structure is high enough to prevent major overtopping. Also the slope of the cover layer will be partly determined on the basis of stone sizes economically available. Cover layer slopes steeper than 1 on 1.5 are not recommended by the Corps of Engineers.

Equation 7-116 determines the weight of an armor unit of nearly uniform size. For a graded riprap armor stone, Hudson and Jackson (1962) have modified the equation to:

Table 7-8. Suggested K_D Values for use in determining armor unit weight[1].

No-Damage Criteria and Minor Overtopping							
Armor Units	n[3]	Placement	Structure Trunk K_D[2]		Structure Head K_D		Slope
			Breaking Wave	Nonbreaking Wave	Breaking Wave	Nonbreaking Wave	Cot θ
Quarrystone							
Smooth rounded	2	Random	*1.2*	2.4	*1.1*	1.9	1.5 to 3.0 [5]
Smooth rounded	>3	Random	*1.6*[4]	*3.2*	*1.4*[4]	*2.3*	[5]
Rough angular	1	Random [4]		*2.9*		*2.3*	
Rough angular	2	Random	2.0	4.0	*1.9*	3.2	1.5
					1.6	2.8	2.0
					1.3	2.3	3.0
Rough angular	>3	Random	*2.2*	*4.5*	*2.1*	*4.2*	5
Rough angular	2	Special [6]	5.8	7.0	*5.3*	6.4	5
Parallelepiped[7]	2	Special [1]	7.0 - 20.0	*8.5 - 24.0*	--	--	
Tetrapod and Quadripod	2	Random	7.0	8.0	*5.0*	6.0	1.5
					4.5	5.5	2.0
					3.5	4.0	3.0
Tribar	2	Random	*9.0*	10.0	*8.3*	9.0	1.5
					7.8	8.5	2.0
					6.0	6.5	3.0
Dolos	2	Random	15.8[8]	31.8[8]	*8.0*	*16.0*	2.0[9]
					7.0	*14.0*	3.0
Modified cube	2	Random	*6.5*	7.5	-----	*5.0*	5
Hexapod	2	Random	*8.0*	9.5	*5.0*	*7.0*	5
Toskane	2	Random	*11.0*	22.0	--	--	5
Tribar	1	Uniform	12.0	15.0	*7.5*	*9.5*	5
Quarrystone (K_{RR}) Graded angular	-	Random	2.2	2.5	--	--	

[1] CAUTION: Those K_D values shown in *italics* are unsupported by test results and are only provided for preliminary design purposes.

[2] Applicable to slopes ranging from 1 on 1.5 to 1 on 5.

[3] n is the number of units comprising the thickness of the armor layer.

[4] The use of single layer of quarrystone armor units is not recommended for structures subject to breaking waves, and only under special conditions for structures subject to nonbreaking waves. When it is used, the stone should be carefully placed.

[5] Until more information is available on the variation of K_D value with slope, the use of K_D should be limited to slopes ranging from 1 on 1.5 to 1 on 3. Some armor units tested on a structure head indicate a K_D-slope dependence.

[6] Special placement with long axis of stone placed perpendicular to structure face.

[7] Parallelepiped-shaped stone: long slab-like stone with the long dimension about 3 times the shortest dimension (Markle and Davidson, 1979).

[8] Refers to no-damage criteria (<5 percent displacement, rocking, etc.); if no rocking (<2 percent) is desired, reduce K_D 50 percent (Zwamborn and Van Niekerk, 1982).

[9] Stability of dolosse on slopes steeper than 1 on 2 should be substantiated by site-specific model tests.

$$W_{50} = \frac{w_r H^3}{K_{RR} (S_r - 1)^3 \cot \theta} \qquad (7\text{-}117)$$

The symbols are the same as defined for equation (7-116). W_{50} is the weight of the 50 percent size in the gradation. The maximum weight of graded rock is 4.0 (W_{50}); the minimum is 0.125 (W_{50}). Additional information on riprap gradation for exposure to wave forces is given by Ahrens (1981b). K_{RR} is a stability coefficient for angular, graded riprap, similar to K_D. Values of K_{RR} are shown in Table 7-8. These values allow for 5 percent damage (Hudson and Jackson, 1962).

Use of graded riprap cover layers is generally more applicable to revetments than to breakwaters or jetties. A limitation for the use of graded riprap is that the design wave height should be less than about 1.5 m (5 ft). For waves higher than 1.5 m (5 ft), it is usually more economical to use uniform-size armor units as specified by equation (7-116).

Values of K_D and K_{RR} are obtained from laboratory tests by first determining values of the stability number N_s where

$$N_s = \frac{w_r^{1/3} H}{W^{1/3} (S_r - 1)} \quad \text{or} \quad \frac{w_r^{1/3} H}{W_{50}^{1/3} (S_r - 1)} \qquad (7\text{-}118)$$

The stability number is plotted as a function of $\cot \theta$ on log-log paper, and a straight line is fitted as a bottom envelope to the data such that

$$N_s = (K_D \cot \theta)^{1/3} \quad \text{or} \quad (K_{RR} \cot \theta)^{1/3} \qquad (7\text{-}119)$$

Powers of $\cot \theta$ other than 1/3 often give a better fit to the data. N_s can be used for armor design by replacing $K_D \cot \theta$ in equation (7-116) or $K_{RR} \cot \theta$ in equation (7-117) with N_s^3, where N_s is a function of some power of $\cot \theta$.

d. Selection of Stability Coefficient. The dimensionless stability coefficient K_D in equation (7-116) accounts for all variables other than structure slope, wave height, and the specific gravity of water at the site (i.e., fresh or salt water). These variables include:

(1) Shape of armor units

(2) Number of units comprising the thickness of armor layer

(3) Manner of placing armor units

(4) Surface roughness and sharpness of edges of armor units (degree of interlocking of armor units)

(5) Type of wave attacking structure (breaking or nonbreaking)

Two approaches have been proposed to control breakage. Zwamborn and Van Niekerk, (1981, 1982) surveyed the performance of dolos-armored breakwaters worldwide and concluded that most structures that failed had been under-designed or had experienced construction difficulties. They formulated lower values for the stability coefficients to produce heavier armor units which would be stable against any crack-causing movement such as rocking in place under wave action. Their results are reflected in Table 7-8. Reinforcement of units with steel bar and fibers (Magoon and Shimizer, 1971) has been tried on several structures. Markle and Davidson (1984b) have surveyed the breakage of reinforced and unreinforced armor units on Corps structures and have found field tests to be inconclusive. No proven analytical method is known for predicting what wave conditions will cause breakage or what type or amount of reinforcement will prevent it.

Projects using tetrapods, tribars, quadripods, and dolosse in the United States are listed in Table 7-11.

g. Design of Structure Cross-Section. A rubble structure is normally composed of a bedding layer and a core of quarry-run stone covered by one or more layers or larger stone and an exterior layer(s) of large quarrystone or concrete armor units. Typical rubble-mound cross sections are shown in Figures 7-116 and 7-117. Figure 7-116 illustrates cross-section features typical of designs for breakwaters exposed to waves on one side (seaward) and intended to allow minimal wave transmission to the other (leeward) side. Breakwaters of this type are usually designed with crests elevated such that overtopping occurs only in very severe storms with long return periods. Figure 7-117 shows features common to designs where the breakwater may be exposed to substantial wave action from both sides, such as the outer portions of jetties, and where overtopping is allowed to be more frequent. Both figures show both a more complex "idealized" cross section and a "recommended" cross section. The idealized cross section provides more complete use of the range of materials typically available from a quarry, but is more difficult to construct. The recommended cross section takes into account some of the practical problems involved in constructing submerged features.

The right-hand column of the table in these figures gives the rock-size gradation of each layer as a percent of the average layer rock size given in the left-hand column. To prevent smaller rocks in an underlayer from being pulled through an overlayer by wave action, the following criterion for filter design (Sowers and Sowers, 1970) may be used to check the rock-size gradations given in Figures 7-116 and 7-117.

$$D_{15}\ (\text{cover}) \leq 5\ D_{85}\ (\text{under})$$

where D_{85} (under) is the diameter exceeded by the coarsest 15 percent of the underlayer and D_{15} (cover) is the diameter exceeded by the coarsest 85 percent of the layer immediately above the underlayer.

Table 7-12. Weight and size selection dimensions of quarrystone[1].

Weight mt	(tons)	Dimension m	(ft)	Weight kg	(lb)	Dimension m	(ft)	Weight kg	(lb)	Dimension cm	(in)	Weight kg	(lb)	Dimension cm	(in)	Weight kg	(lb)	Dimension cm	(in.)
0.907	(1)	0.81	(2.64)	45.36	(100)	0.30	(0.97)	2.27	(5)	10.92	(4.30)								
1.814	(2)	1.02	(3.33)	90.72	(200)	9.38	(1.23)	4.54	(10)	13.77	(5.42)	0.23	(0.5)	5.08	(2.00)	0.01	(0.025)	1.88	(0.74)
2.722	(3)	1.16	(3.81)	136.08	(300)	0.43	(1.40)	6.81	(15)	15.77	(6.21)								
3.629	(4)	1.28	(4.19)	181.44	(400)	9.50	(1.54)	9.07	(20)	17.35	(6.83)	0.45	(1.0)	6.40	(2.52)	0.02	(0.050)	2.36	(0.93)
4.536	(5)	1.38	(4.52)	226.80	(500)	0.51	(1.66)	11.34	(25)	18.70	(7.36)								
5.443	(6)	1.46	(4.80)	272.16	(600)	0.54	(1.77)	13.61	(30)	19.86	(7.82)	0.68	(1.5)	7.32	(2.88	0.03	(0.75)	2.70	(1.06)
6.350	(7)	1.54	(5.05)	317.52	(700)	0.57	(1.86)	15.88	(35)	20.90	(8.23)								
7.258	(8)	1.61	(5.28)	362.88	(800)	0.60	(1.95)	18.14	(40)	21.84	(8.60)	0.91	(2.0)	8.05	(3.17)	0.04	(0.100)	2.97	(1.17)
8.165	(9)	1.67	(5.49)	408.24	(900)	0.62	(2.02)	20.41	(45)	22.73	(8.95)								
9.072	(10)	1.73	(5.69)	453.60	(1000)	0.64	(2.10)	22.68	(50)	23.55	(9.27)	1.13	(2.5)	8.66	(3.41)	0.06	(0.125)	3.20	(1.26)
9.979	(11)	1.79	(5.88)	498.96	(1100)	0.66	(2.16)	24.95	(55)	24.31	(9.57)								
10.866	(12)	1.84	(6.05)	544.32	(1200)	0.68	(2.23)	27.22	(60)	25.02	(9.85)	1.36	(3.0)	9.22	(3.63)	0.07	(0.150)	3.40	(1.34)
11.793	(13)	1.89	(6.21)	589.68	(1300)	0.70	(2.27)	29.48	(65)	25.70	(10.12)								
12.700	(14)	1.94	(6.37)	635.04	(1400)	0.72	(2.35)	31.75	(70)	26.34	(10.37)	1.59	(3.5)	9.70	(3.82)	0.08	(0.175)	3.58	(1.41)
13.608	(15)	1.98	(6.51)	680.40	(1500)	0.73	(2.40)	34.02	(75)	26.95	(10.61)								
14.515	(16)	2.03	(6.66)	725.76	(1600)	0.75	(2.45)	36.29	(80)	27.53	(10.84)	1.81	(4.0	10.13	(3.99)	0.09	(0.200)	3.73	(1.47)
15.422	(17)	2.07	(6.79)	771.12	(1700)	0.76	(2.50)	38.56	(85)	28.09	(11.06)								
16.330	(18)	2.11	(6.92)	816.48	(1800)	0.78	(2.55)	40.82	(90)	28.65	(11.28)	2.04	(4.5)	10.54	(4.15)	0.10	(0.225)	3.89	(1.53)
17.237	(19)	2.15	(7.05)	861.84	(1900)	0.80	(2.60)	43.09	(95)	29.16	(11.48)								
18.144	(20)	2.19	(7.17)	907.20	(2000)	0.81	(2.64)	45.36	(100)	29.54	(11.63)	2.27	(5.0)	10.92	(4.30)	0.11	(0.250)	4.04	(1.59)

[1] Dimensions correspond to size measured by sieve, grizzly, or visual inspection for stone of 25.9 kilonewtons per cubic meter unit weight. Do not use for determining structure crest width or layer thickness.

of a stable cap (Mettam, 1976; Jensen, 1983). Hydraulic model tests by Carver and Davidson (1976; 1983) have investigated the stability of caps with high parapet walls proposed for Corps structures.

To evaluate the need for a massive concrete cap to increase structural stability against overtopping, consideration should be given to the cost of including a cap versus the cost of increasing dimensions (a) to prevent overtopping and (b) for construction and maintenance purposes. A massive concrete cap is not necessary for the structural stability of a structure composed of concrete armor units when the difference in elevation between the crest and the limit of wave runup on the projected slope above the structure is less than 15 percent of the total wave runup. For this purpose, an all-rubble structure is preferable, and a concrete cap should be used only if substantial savings would result. Maintenance costs for an adequately designed rubble structure are likely to be lower than for any alternative composite-type structure.

The cost of a concrete cap should also be compared to the cost of covering the crest with flexible, permeable concrete armor units, perhaps larger than those used on the slopes, or large quarrystone armor. Bottin, Chatham, and Carver (1976) conducted model tests on an overtopped breakwater with dolos armor on the seaward slope, but with large quarrystone on the crest. The breakwater at Pria, Terceria, Azores, was repaired using large quarrystone instead of a concrete cap on the crest to support the primary tetrapod armor units. Two rows of large armor stones were placed along the shoreward side of the crest to stabilize the top row of tetrapods. An inspection in March 1970 indicated that this placement has performed satisfactorily even though the structure has been subjected to wave overtopping.

Hydraulic model tests are recommended to determine the most stable and economical crest designs for major structures.

Experience indicates that concrete placed in the voids on the structure slopes has little structural value. By reducing slope roughness and surface porosity, the concrete increases wave runup. The effective life of the concrete is short, because the bond between concrete and stone is quickly broken by structure settlement. Such filling increases maintenance costs. For a roadway, a concrete cap can usually be justified if frequent maintenance of armored slopes is anticipated. A smooth surface is required for wheeled vehicles; tracked equipment can be used on ribbed caps.

(3) Thickness of Armor Layer and Underlayers and Number of Armor Units. The thickness of the cover and underlayers and the number of armor units required can be determined from the following formulas:

$$r = n\, k_{\Delta} \left(\frac{W}{w_r} \right)^{1/3} \tag{7-121}$$

where r is the average layer thickness in meters (or feet), n is the number of quarrystone or concrete armor units in thickness comprising the cover layer, W is the mass of individual armor units in kilograms (or weight in pounds), and w_r is the mass density in kilograms per cubic meter (or unit weight in pounds per cubic foot). The placing density is given by

$$\frac{N_r}{A} = n\, k_\Delta \left(1 - \frac{P}{100}\right)\left(\frac{w_r}{W}\right)^{2/3} \qquad (7\text{-}122)$$

where N_r is the required number of individual armor units for a given surface area, A is surface area, k_Δ is the layer coefficient, and P is the average porosity of the cover layer in percent. Values of k_Δ and P, determined experimentally, are presented in Table 7-13.

The thickness r of a layer of riprap is either 0.30 m, or one of the following:

$$r = 2.0\left(\frac{W_{50}}{w_r}\right)^{1/3} \qquad (7\text{-}123)$$

where W_{50} is the weight of the 50 percent size in the gradation, or

$$r = 1.25\left(\frac{W_{max}}{w_r}\right)^{1/3} \qquad (7\text{-}124)$$

where W_{max} is the heaviest stone in the gradation, whichever of the three is the greatest. The specified layer thickness should be increased by 50 percent for riprap placed underwater if conditions make placement to design dimensions difficult. The placing density of riprap is calculated as the weight of stone placed per unit area of structure slope, based on the measured weight per unit volume of riprap. The placing density may be estimated as the product of the layer thickness r, the unit weight of the rock w_r, and $\left(1 - \frac{P}{100}\right)$.

(4). Bottom Elevation of Primary Cover Layer. The armor units in the cover layer (the weights are obtained by eq. 7-116) should be extended downslope to an elevation below minimum SWL equal to the design wave height H when the structure is in a depth $>1.5H$, as shown in Figure 7-116. When the structure is in a depth $<1.5H$, armor units should be extended to the bottom, as shown in Figure 7-117.

On revetments located in shallow water, the primary cover layer should be extended seaward of the structure toe on the natural bottom slope as scour protection.

The larger values of K_D for special-placement parallelepiped stone in Table 7-8 can be obtained only if a toe mound is carefully placed to support the quarrystones with their long axes perpendicular to the structure slope (U.S. Army Corps of Engineers, 1979). For dolosse, it is recommended that the bottom rows of units in the primary cover layer be "special placed" on top of the secondary cover layer (Fig. 7-116), the toe berm (Fig. 7-117), or the bottom itself, whenever wave conditions and water clarity permit. Site-specific model studies have been performed with the bottom units placed with their vertical flukes away from the slope and the second row of dolosse placed on or overtopping the horizontal flukes of the lower units to assure that the units interlock with the random-placed units farther up the slope (Carver, 1976;

Bottin, Chatham, and Carver, 1976). The tests indicated that specia placement of the bottom dolosse produces better toe stability than randc placement. The seaward dolosse in the bottom row should be placed with th bottom of the vertical flukes one-half the length of the units (dimension C i Fig. 7-112) back from the design surface of the primary armor layer to produc the design layer thickness. Model tests to determine the bottom elevation o the primary cover layer and the type of armor placement should be mad whenever economically feasible.

(5) Toe Berm for Cover Layer Stability. As illustrated in Figur 7-117, structures exposed to breaking waves should have their primary cove layers supported by a quarrystone toe berm. For preliminary design purpose the quarrystone in the toe berm should weigh $W/10$, where W is the weigh of quarrystone required for the primary cover layer as calculated by equatio (7-116) for site conditions. The toe berm stone can be sized in relation t W even if concrete units are used as primary armor. The width of the top o the berm is calculated using equation (7-120), with $n = 3$. The minimu height of the berm is calculated using equation (7-121), with $n = 2$.

Model tests can establish whether the stone size or berm dimensions shoul be varied for the final design. Tests may show an advantage to adding a toe berm to a structure exposed to nonbreaking waves.

The toe berm may be placed before or after the adjacent cover layer. It must be placed first, as a base, when used with special-placement quarrystone or uniform-placement tribars. When placed after the cover layer, the toe berm must be high enough to provide bracing up to at least half the height of the toe armor units. The dimensions recommended above will exceed this requirement.

(6) Structure Head and Lee Side Cover Layer. Armoring of the head of a breakwater or jetty should be the same on the lee side slope as on the seaside slope for a distance of about 15 to 45 meters from the structure end. This distance depends on such factors as structure length and crest elevation at the seaward end.

Design of the lee side cover layer is based on the extent of wave overtopping, waves and surges acting directly on the lee slope, porosity of the structure, and differential hydrostatic head resulting in uplift forces which tend to dislodge the back slope armor units.

If the crest elevation is established to prevent possible overtopping, the weight of armor units and the bottom elevation of the back slope cover layer should theoretically depend on the lesser wave action on the lee side and the porosity of the structure. When minor overtopping is anticipated, the armor weight calculated for the seaward side primary cover layer should be used on the lee side, at least down to the SWL or -0.5 H for preliminary design; however, model testing may be required to establish an armor weight stable under overtopping wave impact. Primary armor on the lee side should be carried to the bottom for breakwaters with heavy overtopping in shallow water (breaking wave conditions), as shown in Figure 7-117. Equation 7-116 cannot be used with values of K_D listed in Table 7-8 calculate leeside armor weight under overtopping, since the K_D values were established for armor on

the seaward side and may be incorrect for leeside concrete or quarrystone units (Merrifield, 1977; Lillevang, 1977). The presence of a concrete cap will also affect overtopping forces on the lee side in ways that must be quantified by modeling. When both side slopes receive similar wave action (as with groins or jetties), both sides should be of similar design.

(7) Secondary Cover Layer. If the armor units in the primary and secondary cover layers are of the same material, the weight of armor units in the secondary cover layer, between -1.5 H and -2.0 H, should be greater than about one-half the weight of armor units in the primary cover layer. Below -2.0 H, the weight requirements can be reduced to about W/15 for the same slope condition (see Fig. 7-116). If the primary cover layer is of quarrystone, the weights for the secondary quarrystone layers should be ratioed from the weight of quarrystone that would be required for the primary cover layer. The use of a single size of concrete armor for all cover layers--i.e., upgrading the secondary cover layer to the same size as the primary cover layer--may prove to be economically advantageous when the structure is located in shallow water (Fig. 7-117); in other words, with depth $d \leq 1.5$ H, armor units in the primary cover layer should be extended down the entire slope.

The secondary cover layer (Fig. 7-116) from -1.5 H to the bottom should be as thick as or thicker than the primary cover layer. For cover layers of quarrystone, for example, and for the preceding ratios between the armor weight W in the primary cover layer and the quarrystone weight in the secondary cover layers, this means that if $n = 2$ for the primary cover layer (two quarrystones thick) then $n = 2.5$ for the secondary cover layer from -H to -2.0 H and $n = 5$ for that part of the secondary cover layer below -2.0 H.

The interfaces between the secondary cover layers and the primary cover layer are shown at the slope of 1-on-1.5 in Figure 7-116. Steeper slopes for the interfaces may contribute to the stability of the cover armor, but material characteristics and site wave conditions during construction may require using a flatter slope than that shown.

(8) Underlayers. The first underlayer directly beneath the primary armor units should have a minimum thickness of two quarrystones ($n = 2$) (see Figs. 7-116 and 7-117). For preliminary design these should weigh about one-tenth the weight of the overlying armor units (W/10) if (a) the cover layer and first underlayer are both quarrystone, or (b) the first underlayer is quarrystone and the cover layer is concrete armor units with a stability coefficient $K_D \leq 12$ (where K_D is for units on a trunk exposed to nonbreaking waves). When the cover layer is of armor units with $K_D > 12$, such as dolosse, toskanes, and tribars (placed uniformly in a single layer), the first underlayer quarrystone weight should be about W/5 or one-fifth the weight of the overlying armor units. The larger size is recommended to increase interlocking between the first underlayer and the armor units of high K_D. Carver and Davidson (1977) and Carver (1980) found, from hydraulic model tests of quarrystone armor units and dolosse placed on a breakwater trunk exposed to nonbreaking waves, that the underlayer stone size could range from W/5 to W/20, with little effect on stability, runup, or rundown. If the underlayer stone proposed for a given structure is available in weights from W/5 to W/20, the structure should be model tested with a first underlayer of the available stone before the design is made final. The tests

will determine whether this economical material will support a stable primary cover layer of the planned armor units when exposed to the site conditions.

The second underlayer beneath the primary cover layer and upper secondary cover layer (above -2.0 H) should have a minimum equivalent thickness of two quarrystones; these should weight about one-twentieth the weight of the immediately overlying quarrystones (1/20 x W/10 = W/200 for quarrystone and some concrete primary armor units).

The first underlayer beneath the lower secondary cover layer (below -2.0 H), should also have a minimum of two thicknesses of quarrystone (see Fig. 7-116); these should weigh about one-twentieth of the immediately overlying armor unit weight (1/20 x W/15 = W/300 for units of the same material). The second underlayer for the secondary armor below -2.0 H can be as light as W/6,000 , or equal to the core material size.

Note in the "recommended" section of Figure 7-116 that when the primary armor is quarrystone and/or concrete units with $K_D \leq 12$, the first underlayer and second (below -2.0 H) quarrystone sizes are W/10 to W/15. If the primary armor is concrete armor units with $K_D > 12$, the first underlayer and secondary (below -2.0 H) quarrystone sizes are W/5 and W/10 .

For a graded riprap cover layer, the minimum requirement for the underlayers, if one or more are necessary, is

$$D_{15\ (cover)} \leq 5D_{85\ (under)}$$

where $D_{15\ (cover)}$ is the diameter exceeded by the coarsest 85 percent of the riprap or underlayer on top and $D_{85\ (under)}$ is the diameter exceeded by the coarsest 15 percent of the underlayer or soil below (Ahrens, 1981). For a revetment, if the riprap and the underlying soil satisfy the size criterion, no underlayer is necessary; otherwise, one or more are required. The size criterion for riprap is more restrictive than the general filter criterion given at the beginning of Section III,7,g, above, and repeated below. The riprap criterion requires larger stone in the lower layer to prevent the material from washing through the voids in the upper layer as its stones shift under wave action. A more conservative underlayer than that required by the minimum criterion may be constructed of stone with a 50 percent size of about W50/20. This larger stone will produce a more permeable underlayer, perhaps reducing runup, and may increase the interlocking between the cover layer and underlayer; but its gradation must be checked against that of the underlying soil in accordance with the criterion given above.

The underlayers should be at least three 50 percent-size stones thick, but not less than 0.23 meter (Ahrens, 1981). The thickness can be calculated using equation (7-123) with a coefficient of 3 rather than 2. Note that, since a revetment is placed directly on the soil or fill of the bank it protects, a single underlayer also functions as a bedding layer or filter blanket.

(9) Filter Blanket or Bedding Layer. Foundation conditions for marine structures require thorough evaluation. Wave action against a rubble

structure, even at depths usually considered unaffected by such action, creates turbulence within both the structure and the underlying soil that may draw the soil into the structure, allowing the rubble itself to sink. Revetments and seawalls placed on sloping beaches and banks must withstand groundwater pressure tending to wash underlying soil through the structure. When large quarrystones are placed directly on a sand foundation at depths where waves and currents act on the bottom (as in the surf zone), the rubble will settle into the sand until it reaches the depth below which the sand will not be disturbed by the currents. Large amounts of rubble may be required to allow for the loss of rubble because of settlement. This settlement, in turn, can provide a stable foundation; but a rubble structure can be protected from excessive settlement resulting from leaching, undermining, or scour, by the use of either a filter blanket or bedding layer.

It is advisable to use a filter blanket or bedding layer to protect the foundations of rubble-mound structures from undermining except (a) where depths are greater than about three times the maximum wave height, (b) where the anticipated current velocities are too weak to move the average size of foundation material, or (c) where the foundation is a hard, durable material (such as bedrock).

When the rubble structure is founded on cohesionless soil, especially sand, a filter blanket should be provided to prevent differential wave pressures, currents, and groundwater flow from creating a quick condition in the foundation by removing sand through voids of the rubble and thus causing settlement. A filter blanket under a revetment may have to retain the foundation soil while passing large volumes of groundwater. Foundations of coarse gravel may be too heavy and permeable to produce a quick condition, while cohesive foundation material may be too impermeable.

A foundation that does not require a filter blanket may require a protective bedding layer. A bedding layer prevents erosion during and after construction by dissipating forces from horizontal wave, tide, and longshore currents. It also acts as a bearing layer that spreads the load of overlying stone (a) on the foundation soil to prevent excessive or differential settlement, and (b) on the filter material to prevent puncture. It interlocks with the overlying stone, increasing structure stability on slopes and near the toe. In many cases a filter blanket is required to hold foundation soil in place but a bedding layer is required to hold the filter in place. Gradation requirements of a filter layer depend principally on the size characteristics of the foundation material. If the criterion for filter design (Sowers and Sowers, 1970) is used, D_{15} (filter) is less than or equal to $5D_{85}$ (foundation) (i.e., the diameter exceeded by the coarsest 85 percent of the filter material must be less than or equal to 5 times the diameter exceeded by the coarsest 15 percent of the foundation material) to ensure that the pores in the filter are too small to allow passage of the soil. Depending on the weight of the quarrystone in the structure, a geotextile filter may be used (a) instead of a mineral blanket, or (b) with a thinner mineral blanket. Geotextiles are discussed in Chapter 6 and by Moffatt and Nichol, Engineers (1983) and Eckert and Callender (1984), who present detailed requirements for using geotextile filters beneath quarrystone armor in coastal structures. A geotextile, coarse gravel, or crushed stone filter may be

JOINT APPLICATION FORM

For Permits/Determinations to undertake activities affecting streams, waterways, waterbodies, wetlands, coastal areas and sources of water withdrawal.

New York State

You must separately apply for and obtain separate Permits/Determinations from each involved agency prior to proceeding with work. Please read all instructions.

US Army Corps of Engineers (USACE)

APPLICATIONS TO

1. NYS Department of Environmental Conservation

Check all permits that apply:

- ☑ Stream Disturbance
- ☑ Excavation and Fill in Navigable Waters
- ☐ Docks, Moorings or Platforms
- ☐ Dams and Impoundment Structures
- ☑ 401 Water Quality Certification
- ☐ Freshwater Wetlands
- ☐ Tidal Wetlands
- ☑ Coastal Erosion Management
- ☐ Wild, Scenic and Recreational Rivers
- ☐ Water Withdrawal
- ☐ Long Island Well
- ☐ Aquatic Vegetation Control
- ☐ Aquatic Insect Control
- ☐ Fish Control
- ☐ Incidental Take of Endangered/Threatened Species

☑ I am sending this application to this agency.

2. US Army Corps of Engineers

Check all permits that apply:

- ☑ Section 404 Clean Water Act
- ☐ Section 10 Rivers and Harbors Act
- ☐ Nationwide Permit(s) - Identify Number(s): _____

Preconstruction Notification - ☑ Y / ☐ N

☐ I am sending this application to this agency.

3. NYS Office of General Services

Check all permits that apply:

- ☑ State Owned Lands Under Water
- ☐ Utility Easement (pipelines, conduits, cables, etc.)
- ☐ Docks, Moorings or Platforms

☐ I am sending this application to this agency.

4. NYS Department of State

Check if this applies:

- ☐ Coastal Consistency Concurrence

☐ I am sending this application to this agency.

5. Name of Applicant (use full name)

The O'Neill Group-Dutton, LLC and Dutchess Avenue Riverwalk, LLC, Dutchess Ave. Riverwalk North LLC

Mailing Address: The O'Neill Group, 241 Hudson Street

Post Office City: Hackensack

State: NJ Zip Code: 07601

Telephone (daytime): (201) 488-4455

Email: lkaufman@theoneillgroup.us

Applicant must be:

- ☑ Owner
- ☐ Operator
- ☐ Lessee

(check all that apply)

Taxpayer ID (If applicant is NOT an individual): 75-3165464

6. Name of Facility or Property Owner (if different than Applicant)

Mailing Address

Post Office City

State Zip Code

Telephone (daytime) Email

7. Contact/Agent Name

Louis Kaufman
The ONeill Group

Company Name: O'Neill Group-Dutton, LLC,Dutchess Avenue Riverwalk, LLC and Dutchess Avenue Riverwalk North LLC

Mailing Address: 241 Hudson Street

Post Office City: Hackensack

State: NJ Zip Code: 07601

Telephone (daytime): (201) 488-4455

Email: lkaufman@theoneillgroup.us

8. Project / Facility Name

Dutchess Avenue Riverfront North LLC
O'Neill Group-Dutton, LLC and
Dutchess Avenue Riverwalk, LLC

Property Tax Map Section / Block / Lot Number:
131300-6062-59-766443
134689-6062 02 763508

Project Location - Provide directions and distances to roads, bridges and bodies of waters:

One Dutchess Avenue, Poughkeepsie, NY: Northwest of North Water Street and Hoffman Street intersection: Bounded on the west by the Hudson River.

Street Address, if applicable: One Dutchess Avenue

Post Office City: Poughkeepsie State: NY Zip Code: 12601

Town / Village / City: Poughkeepsie

County: Dutchess

Name of USGS Quadrangle Map: Poughkeepsie

Stream/Water Body Name: Hudson River

Location Coordinates: Enter NYTMs in kilometers, **OR** Latitude/Longitude

NYTM-E	NYTM-N	Latitude	Longitude
		41°42'49.96"N	73°56'18.83"W

For Agency Use Only DEC Application Number: USACE Number:

JOINT APPLICATION FORM - PAGE 2 OF 2

Submit this completed page as part of your Application.

9. **Project Description and Purpose:** Provide a complete narrative description of the proposed work and its purpose. Attach additional page(s) if necessary. Include: description of current site conditions and how the site will be modified by the proposed project; structures and fill materials to be installed; type and quantity of materials to be used (i.e., square ft of coverage and cubic yds of fill material and/or structures below ordinary/mean high water) area of excavation or dredging, volumes of material to be removed and location of dredged material disposal or use; work methods and type of equipment to be used; pollution control methods and mitigation activities proposed to compensate for resource impacts; and where applicable, the phasing of activities. **ATTACH PLANS ON SEPARATE PAGES.**

The project site involves the development of a 2.83 acres, 1,400 foot linear park on the Hudson River which will be subsequently conveyed to the City of Poughkeepsie ("the Project"). 2.009 acres of this park are in the City of Poughkeepsie and 0.824 acres are in the Town of Poughkeepsie.

The site has been investigated and application for acceptance into the New York State Department of Environmental Conservation (DEC) Brownfields Clean-up Program (site ID 314081) is pending.The site has been investigated according to DEC guidelines. A Remedial Design Work Plan is pending approval by the DEC and clean-up by the Applicant has begun under a permit from NYSOGS and NYSDEC. All vacant structures on the Project Site have been demolished and all contaminated soil in excess of acceptable limits has been removed. A clean soil cap is being placed on the site and engineering and management reports are being prepared. The remediation action includes shoreline stabilization activities.

Proposed Use: ☐ Private ☑ Public ☐ Commercial	Proposed Start Date: 5/1/15	Estimated Completion Date: 5/1/16

Has Work Begun on Project? ☑ Yes ☐ No If Yes, explain.

Brownfields Clean-up. See above.

Will Project Occupy Federal, State or Municipal Land? ☑ Yes ☐ No If Yes, please specify.

Work to create a public Park as stated above in the Project Description.

10. List Previous Permit / Application Numbers (if any) and Dates:

Brownfields Clean-up Program (site ID 314081)

11. Will this project require additional Federal, State, or Local Permits including zoning changes? ☑ Yes ☐ No If yes, please list:

See attached list of Required Approvals/Review and Involved Agencies.

12. **Signatures.** If applicant is not the owner, both must sign the application.

I hereby affirm that information provided on this form and all attachments submitted herewith is true to the best of my knowledge and belief. False statements made herein are punishable as a Class A misdemeanor pursuant to Section 210.45 of the Penal Law. Further, the applicant accepts full responsibility for all damage, direct or indirect, of whatever nature, and by whomever suffered, arising out of the project described herein and agrees to indemnify and save harmless the State from suits, actions, damages and costs of every name and description resulting from said project. In addition, Federal Law, 18 U.S.C., Section 1001 provides for a fine of not more than $10,000 or imprisonment for not more than 5 years, or both where an applicant knowingly and willingly falsifies, conceals, or covers up a material fact; or knowingly makes or uses a false, fictitious or fraudulent statement.

Signature of Applicant	Printed Name	Title	Date
[signature]	Paula O'Neill	Managing Member	4-20-15
Signature of Owner	Printed Name	Title	Date
Signature of Agent	Printed Name	Title	Date

For Agency Use Only **DETERMINATION OF NO PERMIT REQUIRED**

Agency Project Number _____

_____ (Agency Name) has determined that No Permit is required from this Agency for the project described in this application.

Agency Representative: Name (printed) _____ Title _____

Signature _____ Date _____

JOINT APPLICATION FORM

For Permits/Determinations to undertake activities affecting streams, waterways, waterbodies, wetlands, coastal areas and sources of water withdrawal.

New York State

You must separately apply for and obtain separate Permits/Determinations from each involved agency prior to proceeding with work. Please read all instructions.

US Army Corps of Engineers (USACE)

APPLICATIONS TO

1. NYS Department of Environmental Conservation

Check all permits that apply:

- ☑ Stream Disturbance
- ☑ Excavation and Fill in Navigable Waters
- ☐ Docks, Moorings or Platforms
- ☐ Dams and Impoundment Structures
- ☑ 401 Water Quality Certification
- ☐ Freshwater Wetlands
- ☐ Tidal Wetlands
- ☑ Coastal Erosion Management
- ☐ Wild, Scenic and Recreational Rivers
- ☐ Water Withdrawal
- ☐ Long Island Well
- ☐ Aquatic Vegetation Control
- ☐ Aquatic Insect Control
- ☐ Fish Control
- ☐ Incidental Take of Endangered/Threatened Species

☑ I am sending this application to this agency.

2. US Army Corps of Engineers

Check all permits that apply:

- ☑ Section 404 Clean Water Act
- ☐ Section 10 Rivers and Harbors Act
- ☐ Nationwide Permit(s) - Identify Number(s): _____

Preconstruction Notification - ☑ Y / ☐ N

☐ I am sending this application to this agency.

3. NYS Office of General Services

Check all permits that apply:

- ☑ State Owned Lands Under Water
- ☐ Utility Easement (pipelines, conduits, cables, etc.)
- ☐ Docks, Moorings or Platforms

☐ I am sending this application to this agency.

4. NYS Department of State

Check if this applies:

- ☐ Coastal Consistency Concurrence

☐ I am sending this application to this agency.

5. Name of Applicant (use full name)

The O'Neill Group-Dutton, LLC and Dutchess Avenue Riverwalk, LLC, Dutchess Ave. Riverwalk North LLC

Mailing Address: The O'Neill Group, 241 Hudson Street

Post Office City: Hackensack

State: NJ Zip Code: 07601

Telephone (daytime): (201) 488-4455

Email: lkaufman@theoneillgroup.us

Applicant must be:

- ☑ Owner
- ☐ Operator
- ☐ Lessee

(check all that apply)

Taxpayer ID (If applicant is NOT an individual): 75-3165464

6. Name of Facility or Property Owner (if different than Applicant)

Mailing Address

Post Office City

State Zip Code

Telephone (daytime) Email

7. Contact/Agent Name

Louis Kaufman
The ONeill Group

Company Name: O'Neill Group-Dutton, LLC,Dutchess Avenue Riverwalk, LLC and Dutchess Avenue Riverwalk North LLC

Mailing Address: 241 Hudson Street

Post Office City: Hackensack

State: NJ Zip Code: 07601

Telephone (daytime): (201) 488-4455

Email: lkaufman@theoneillgroup.us

8. Project / Facility Name

Dutchess Avenue Riverfront North LLC
O'Neill Group-Dutton, LLC and
Dutchess Avenue Riverwalk, LLC

Property Tax Map Section / Block / Lot Number
131300-6062-59-766443
134689-6062 02 763508

Project Location - Provide directions and distances to roads, bridges and bodies of waters:

One Dutchess Avenue, Poughkeepsie, NY: Northwest of North Water Street and Hoffman Street intersection: Bounded on the west by the Hudson River.

Street Address, if applicable: One Dutchess Avenue

Post Office City: Poughkeepsie State: NY Zip Code: 12601

Town / Village / City: Poughkeepsie

County: Dutchess

Name of USGS Quadrangle Map: Poughkeepsie

Stream/Water Body Name: Hudson River

Location Coordinates: Enter NYTMs in kilometers, **OR** Latitude/Longitude

NYTM-E	NYTM-N	Latitude	Longitude
		41°42'49.96"N	73°56'18.83"W

For Agency Use Only DEC Application Number: USACE Number:

JOINT APPLICATION FORM - PAGE 2 OF 2

Submit this completed page as part of your Application.

9. **Project Description and Purpose:** Provide a complete narrative description of the proposed work and its purpose. Attach additional page(s) if necessary. Include: description of current site conditions and how the site will be modified by the proposed project; structures and fill materials to be installed; type and quantity of materials to be used (i.e., square ft of coverage and cubic yds of fill material and/or structures below ordinary/mean high water) area of excavation or dredging, volumes of material to be removed and location of dredged material disposal or use; work methods and type of equipment to be used; pollution control methods and mitigation activities proposed to compensate for resource impacts; and where applicable, the phasing of activities. **ATTACH PLANS ON SEPARATE PAGES.**

The project site involves the development of a 2.83 acres, 1,400 foot linear park on the Hudson River which will be subsequently conveyed to the City of Poughkeepsie ("the Project"). 2.009 acres of this park are in the City of Poughkeepsie and 0.824 acres are in the Town of Poughkeepsie.

The site has been investigated and application for acceptance into the New York State Department of Environmental Conservation (DEC) Brownfields Clean-up Program (site ID 314081) is pending.The site has been investigated according to DEC guidelines. A Remedial Design Work Plan is pending approval by the DEC and clean-up by the Applicant has begun under a permit from NYSOGS and NYSDEC. All vacant structures on the Project Site have been demolished and all contaminated soil in excess of acceptable limits has been removed. A clean soil cap is being placed on the site and engineering and management reports are being prepared. The remediation action includes shoreline stabilization activities.

Proposed Use: ☐ Private ☑ Public ☐ Commercial	Proposed Start Date: 5/1/15	Estimated Completion Date: 5/1/16

Has Work Begun on Project? ☑ Yes ☐ No If Yes, explain.

Brownfields Clean-up. See above.

Will Project Occupy Federal, State or Municipal Land? ☑ Yes ☐ No If Yes, please specify.

Work to create a public Park as stated above in the Project Description.

10. List Previous Permit / Application Numbers (if any) and Dates:

Brownfields Clean-up Program (site ID 314081)

11. Will this project require additional Federal, State, or Local Permits including zoning changes? ☑ Yes ☐ No If yes, please list:

See attached list of Required Approvals/Review and Involved Agencies.

12. **Signatures.** If applicant is not the owner, both must sign the application.

I hereby affirm that information provided on this form and all attachments submitted herewith is true to the best of my knowledge and belief. False statements made herein are punishable as a Class A misdemeanor pursuant to Section 210.45 of the Penal Law. Further, the applicant accepts full responsibility for all damage, direct or indirect, of whatever nature, and by whomever suffered, arising out of the project described herein and agrees to indemnify and save harmless the State from suits, actions, damages and costs of every name and description resulting from said project. In addition, Federal Law, 18 U.S.C., Section 1001 provides for a fine of not more than $10,000 or imprisonment for not more than 5 years, or both where an applicant knowingly and willingly falsifies, conceals, or covers up a material fact; or knowingly makes or uses a false, fictitious or fraudulent statement.

Signature of Applicant	Printed Name	Title	Date
[signature]	Paula O'Neill	Managing Member	4-20-15
Signature of Owner	Printed Name	Title	Date
Signature of Agent	Printed Name	Title	Date

For Agency Use Only **DETERMINATION OF NO PERMIT REQUIRED**

_____ (Agency Name) has determined that No Permit is required from this Agency for the project described in this application. Agency Project Number _____

Agency Representative: Name (printed) _____ Title _____

Signature _____ Date _____

APPENDIX E

HEALTH AND SAFETY PLAN

AC DUTTON GREENWAY CITY SITE

CITY OF POUGHKEEPSIE, NEW YORK

HEALTH AND SAFETY PLAN

Prepared for:
DUTCHESS AVENUE RIVER WALK LLC
241 HUDSON STREET

HACKENSACK, NJ 07601

Prepared by:
SESI CONSULTING ENGINEERS, PC
12A MAPLE AVENUE, PINE BROOK, NJ 07058
Ph: (973) 808 - 9050

JUNE 2015

SITE-SPECIFIC HEALTH AND SAFETY PLAN

FOR

AC DUTTON GREENWAY CITY SITE
CITY OF POUGHKEEPSIE, NEW YORK

Prepared by: _____ Date: _____
Robert Rains, EIT
SESI-Project Engineer

Approved by: _____ Date: _____
Fuad Dahan, P.E.
SESI – Senior Project Engineer (SPE)

Approved by: _____ Date: _____
Michael St Pierre, P.E.
Principal
SESI – Project Manager (PM)

TABLE OF CONTENTS

1.0 INTRODUCTION 1

2.0 SPECIFIC SCOPE OF WORK 1

3.0 HEALTH AND SAFETY PERSONNEL AND RESPONSIBILITIES 2

3.1 PROJECT MANAGER (PM) 2
3.2 PROJECT HEALTH AND SAFETY OFFICER (HSO) 2
3.3 SITE SAFETY OFFICER (SSO) 3
3.4 FIELD SUPERVISOR (FS) 3
3.5 FIELD PERSONNEL (FP) 4
3.6 SITE SPECIFIC HEALTH AND SAFETY CONTACTS 4
3.7 SUBCONTRACTOR SITE CONTACTS 5

4.0 PERSONAL PROTECTIVE EQUIPMENT (PPE) 6

4.1 GENERAL LEVELS OF PROTECTION 6
4.2 REASSESSMENT OF PROTECTION PROGRAM 7

5.0 AIR MONITORING 7

5.1 REAL TIME MONITORING 7
5.2 AIR MONITORING EQUIPMENT AND ACTION LEVELS 7
5.3 AIR MONITORING EQUIPMENT CALIBRATION/INFORMATION 9

6.0 SITE CONTROL/ACCESS 9

6.1 ESTABLISHMENT OF SITE WORK ZONES 9
6.2 SITE HOUSEKEEPING AND SANITATION 10

7.0 MEDICAL SURVEILLANCE 10

8.0 MATERIAL HANDLING AND DECONTAMINATION 10

8.1 DECONTAMINATION 11
8.1.1 Personnel Decontamination 11
8.1.2 Equipment Decontamination 11
8.1.3 Material Handling 12

9.0 EMERGENCY PROCEDURES 12

9.1 PRE-EMERGENCY PLANNING 12
9.2 EVACUATION 12
9.3 EMERGENCY MEDICAL TREATMENT AND FIRST AID 12
9.4 EMERGENCY DECONTAMINATION 13
9.5 ACCIDENT/INCIDENT REPORTING 13
9.6 ADVERSE WEATHER CONDITIONS 14
9.7 EMERGENCY CONTACT INFORMATION 14
9.8 HOSPITAL INFORMATION AND DIRECTIONS 15

10.0 SAFE WORK PRACTICES 15

10.1 ROUTINE SAFE WORK PRACTICES 15
10.2 PERSONNEL SAFETY 16
10.3 SAFETY PROCEDURES IN EXCLUSION ZONE 16
10.4 OPERATION OF HEAVY EQUIPMENT 16

11.0 TRAINING 17

11.1 GENERAL 17
11.2 SITE SPECIFIC TRAINING 17
11.3 ADDITIONAL TRAINING 17

11.4 ON-SITE SAFETY BRIEFINGS 18
11.5 SUBCONTRACTOR TRAINING 18

12.0 LOGS, REPORTS AND RECORDKEEPING 18

12.1 HASP FIELD CHANGE REQUEST 18
12.2 MEDICAL AND TRAINING RECORDS 18
12.3 EXPOSURE RECORDS 18
12.4 ACCIDENT/INCIDENT REPORT 18
12.5 OSHA FORM 200 18
12.6 ON-SITE HEALTH AND SAFETY FIELD LOG BOOKS 18
12.7 MATERIAL SAFETY DATA SHEETS 19

13.0 SITE SPECIFIC ELEMENTS OF THE HASP 19

13.1 GENERAL SITE BACKGROUND 19
13.2 EVALUATION OF HAZARDS 19
13.2.1 Hazard Characteristics 19
13.2.2 Potential Health and Safety Hazards 19
13.2.3 Hazard Identification/Ranking 20
13.3 ENVIRONMENTAL SAMPLE COLLECTION AND SUBSURFACE DRILLING 20
13.3.1 Contaminants of Concern 20

LIST OF FIGURES

Figure No.	Title
Fig-1	Site Location Map
HASP-1	Directions to Catskill Regional Medical Center

LIST OF EMBEDDED TABLES

Table	Title	Page
1.	Subcontractor Site Contacts	5
2.	Air Monitoring Equipment and Action Levels	8
3.	Emergency Telephone Numbers	14
4.	Action Levels for Air Monitoring (Absence of Benzene)	22
5.	Action Levels for Air Monitoring (Benzene Present)	24

LIST OF APPENDICIES

Appendix A	Accident/Incident Report
Appendix B	Heat Stress
Appendix C	Cold Stress
Appendix D	OSHA Poster
Appendix E	HASP Field Change Request Form
Appendix F	Signatory Page
Appendix G	Material Safety Data Sheets

SITE-SPECIFIC HEALTH AND SAFETY PLAN

FOR

AC DUTTON GREENWAY CITY SITE
CITY OF POUGHKEEPSIE, NEW YORK

1.0 INTRODUCTION

The purpose of a Health and Safety Plan (HASP) is to establish requirements for protecting the health and safety of personnel of SESI Consulting Engineers (SESI) from possible exposure to potentially hazardous substances during site activities. This site specific HASP has been developed by SESI Consulting Engineers to establish the site-specific health and safety procedures required to minimize any potential risk to their personnel performing certain activities at the former AC Dutton Greenway City Site in the City of Poughkeepsie, New York, herein referred to as the "Site." Figure 1 provides the Site location.

The provisions of this HASP apply to only SESI personnel who may potentially be exposed to health and/or safety hazards related to specific activities at the Site. All SESI activities will be conducted in accordance with these plans.

This HASP was written to meet the requirements of all applicable federal, state and local health and safety regulations, including OSHA 29 CFR 1910.120. The HASP is based on current knowledge regarding the specific chemical and physical hazards that are known or anticipated at this Site.

This HASP is a dynamic document, for which changes and/or revisions may be realized as changes in scope and/or site conditions are encountered. Should revised documents be produced, the revised documents will refer to the specific changes and why they were made.

Personnel who cannot or will not comply with this HASP will be excluded from on-site activities.

Subcontractors to SESI must prepare their own HASP related to their specific on-site assignments. Each subcontractor shall have at least one Competent Person on site while their employees are working on site. "Competent Person" means one who is capable of identifying existing and predictable hazards in the surroundings, or working area, which are unsanitary, hazardous, or dangerous to employees (or others), and who has authorization to take prompt corrective measures to eliminate them and/or clear the area. Each subcontractor is solely responsible for preparing, implementing and enforcing their own HASP. The subcontractor is also solely responsible for complying with all applicable OSHA requirements and all other federal, state and local safety requirements.

2.0 SPECIFIC SCOPE OF WORK

This HASP contains information for the following tasks that SESI is expected to conduct at the Site. Should additional and/or different tasks be identified, amendments to this HASP will be required to address these change items.

Importing and placing of fill material.

3.0 HEALTH AND SAFETY PERSONNEL AND RESPONSIBILITIES

The responsibilities of the designated health and safety staff are described in the following sections.

3.1 PROJECT MANAGER (PM)

The Project Manager is responsible for controlling all technical work in an environmentally safe manner, assuring that operational hazards are minimized and implementing this HASP during all project task elements. Some specific responsibilities include but are not limited to:

(1) Verifying that all personnel involved with this project have a copy or have read this HASP, understand the HASP, and have signed the HASP sign-off sheet.

(2) Assuring that all personnel involved with this project have attended a briefing or a tailgate meeting regarding the contents of the HASP and site-specific hazards prior to performing work.

(3) Determining that sufficient Personal Protection Equipment (PPE), air monitoring and equipment as required by this HASP is available.

(4) Assuring that all contractor personnel submit documentation of employee participation in a medical, training and drug & alcohol programs (when applicable).

(5) Maintaining a high level of health and safety consciousness among the field personnel.

3.2 PROJECT HEALTH AND SAFETY OFFICER (HSO)

The Project Health and Safety Officer is responsible for the preparation, interpretation, and modification of the HASP. Some specific duties include but are not limited to:

(1) Advising the Project Manager and field personnel on matters relating to health and safety.

(2) Recommending appropriate PPE and air monitoring instrumentation to protect personnel from Site hazards.

(3) Conducting field audits, if deemed necessary, to monitor the effectiveness of the HASP and to assure compliance with it.

(4) Performing personal exposure monitoring where required and, where deemed necessary, to determine the adequacy of protective measures and PPE specified by this HASP.

(5) Maintaining contact with the Project Manager and field personnel to regularly evaluate Site conditions and any new information that might require modifications to the HASP.

(6) Working with the Project Manager to ensure that sufficient PPE is available onsite.

(7) Conducting briefing meetings. When necessary, to apprise personnel of the contents of the HASP and Site hazards.

(8) Conducting accident/incident investigations and preparing accident/incident investigation reports along with the appropriate operations personnel.

3.3 SITE SAFETY OFFICER (SSO)

The Site Safety Officer is responsible for ensuring the Health & Safety guidelines are followed, in addition to monitoring for airborne contaminants when necessary and evaluating new hazards and operation changes. The Site Safety Officer has the authority to correct all noncompliance situations immediately and to stop work in cases of immediate danger. Specific responsibilities include but are not limited to:

(1) Obtaining the air monitoring instrumentation required and conducting the necessary air monitoring.

(2) Verifying that all PPE and other health and safety equipment is in proper working condition.

(3) Upgrading and downgrading PPE as specified in the HASP.

(4) Conducting daily briefing meetings. When necessary, to apprise personnel of the contents of the HASP and Site hazards.

(5) Notifying the Project Manager and Health & Safety Officer of all noncompliance and dangerous situations.

(6) Supervising and monitoring the safety performance of all field personnel to ensure required safety and health procedures are followed and correct any deficiencies.

(7) Reporting all accidents/incidents to the Health & Safety Officer.

(8) Initiating emergency response procedures.

(9) Establishing the work zones

3.4 FIELD SUPERVISOR (FS)

The Field Supervisor is responsible for the field operations needed to complete the project. Some specific responsibilities include but are not limited to:

(1) Reading and understanding the HASP.

(2) Ensuring all equipment needed for the project is available and properly maintained.

(3) Communicating newly identified hazards or noncompliance issues with the Project Manager, Health & Safety Officer and the Site Safety Officer.

(4) Ensuring field personnel have received the necessary training and Health & Safety briefings before work begins. Conduct a Tailgate Safety Briefing each day before fieldwork is started and review emergency procedures.

(5) Correcting any deficiencies regarding health, safety or operating procedures.

(6) Reporting any injuries and illnesses to the Project Manager and Health & Safety Officer.

(7) Stopping work in cases of immediate danger.

3.5 FIELD PERSONNEL (FP)

All field personnel are responsible for following the Health & Safety procedures specified in this HASP and work practices specified in applicable operating procedures. Some specific responsibilities include but are not limited to:

(1) Reading and understanding the HASP.

(2) Reporting all accidents, incidents, injuries or illnesses to the Field Coordinator.

(3) Complying with the requests of the Site Safety Officer.

(4) Immediately communicating newly identified hazards or noncompliance issues to the Field Supervisor or Site Safety Officer.

(5) Stopping work in cases of immediate danger.

3.6 SITE SPECIFIC HEALTH AND SAFETY CONTACTS

Following are the Health and Safety key personnel and contact information for the identified individuals who are involved with the activities of this project. This will be updated if there are any changes in the organization that would affect this project.

Project Manager (PM)
Fuad Dahan, P.E.
Technical Director
(973) 808 9050, Ext.244 (work)

Project Manager (PM)
Michael St. Pierre, P.E.
Technical Director
(973) 808 9050, Ext.244 (work)

Project Health and Safety Officer (HSO)
Fuad Dahan, P.E.
(973) 808 9050, Ext. 234 (work)

Site Safety Officer (SSO)
Bob Rains
Staff Engineer
(973) 808 9050, Ext. 239 (work)

Field Personnel (FP)
TBD

3.7 SUBCONTRACTOR SITE CONTACTS

To be determined

SEE TABLE 1

TABLE 1 – SUBCONTRACTOR SITE CONTACTS		
Name/Title	**Company**	**Telephone Number**
TBD		

4.0 PERSONAL PROTECTIVE EQUIPMENT (PPE)

The level of protection used by field personnel will be enforced by the HSO. Levels of protection may be upgraded and/or downgraded at the discretion of the HSO. This decision shall be based on real-time air monitoring, Site history data, and prior Site experience. Any change in the level of protection shall be recorded in the Health and Safety field book.

4.1 GENERAL LEVELS OF PROTECTION

The general levels of protection are based primarily on:

- The type, toxicity and measured concentration of the chemical substance
- The potential or measure exposure to substances in the air, splashes of liquid, or other means of direct contact

The equipment used to protect the body against contact with chemical hazards is divided into four categories (A, B, C, D), according to the degree of protection needed. Given the scope of the planned activities at the Site, it is expected that Level A and B protection will not be needed/utilized. Should ambient conditions reach levels of contamination that would require Level A or B protection, all personnel will be evacuated from the Site. The following text provides the details of the PPE selection at levels C, and D.

Level D Protection: X

(a) Coveralls: type: work clothes

(b) Gloves: type: latex or equivalent, when sampling

(c) Boots: type: steel-toed boots or work shoes

(d) Hard Hat: Yes X No _____

(e) Other: ear protection, when required

(f) Modifications: eye protection with safety glasses and side shields

Level C Protection: _____

(a) Air-Purifying Respirator: X Cartridge Type: Charcoal Canister with HEPA dust filter

(b) Coveralls: type: Tyvek

(c) Gloves: type: neoprene over latex

(d) Boots: type: latex

(e) Hard Hat: Yes X No _____

(f) Other: ear protection, when required

(g) Modifications: _____

Level B Protection: _____

Not authorized for SESI Personnel

4.2 REASSESSMENT OF PROTECTION PROGRAM

The level of protection provided by PPE selection shall be upgraded if conditions change such that there is a possibility of overexposure to the present hazards.

Some indicators of the need for reassessment are:

- Change in job tasks during a work phase.
- Contaminants other than those previously identified are encountered.
- Change in ambient levels of contaminants.
- Change of work scope, which affects the degree of contact with contaminants.

The HSO has the responsibility for monitoring Site conditions and deciding the appropriate level of protection based on air monitoring guidelines presented in this document. The PM shall be consulted when information is limited or when more clarification is required.

5.0 AIR MONITORING

5.1 REAL TIME MONITORING

The following monitoring instruments will be available for use during field operation, as necessary:

- Photo Ionization Detector (PID) and specific gas monitors for methane and hydrogen sulfide.
- Dust Monitor
- Combustible Gas indicator (CGI) (CGI Landtec GA90L or equivalent)

Organic vapor concentrations shall be measured using the PID during all Site soil invasive operations. The PID/FID will be used to monitor ambient and breathing zone concentration. Air monitoring results shall be interpreted conservatively to be protective of worker health. Organic vapor concentrations shall be measured upwind of the work site(s) to determine background concentrations at least twice a day (once in the morning and once in the afternoon) and when the wind direction shifts during the work period (day). Measurements shall be obtained in the breathing zones of personnel as well as in the area of the source.

A dust monitor will be used at the Site to monitor the particulate levels in air during on-site activities.

Specific Gas meters shall be used to monitor for combustible gases and oxygen content during the soil boring activities.

5.2 AIR MONITORING EQUIPMENT AND ACTION LEVELS

Air monitoring at the Site will consist of: (X) Type of Monitoring as shown in Table 2 below.

TABLE 2 – AIR MONITORING OUTLINE		
Monitoring Equipment	**Frequency of Surveillance**	**Action Level**
X PID (MultiRAE PLUS-PGM-50 or equivalent)	Continuous	Level C - ≥ 1ppm for 5 minutes. EVACUATE-100 ppm for 1 minute. (No level Work will cease when the combustible gas meter indicates that 10% of the LEL has been reached (i.e. 0.5% methane); work may continue again after the work area vents and the meter indicates the % LEL is <10% LEL
X Methane, CO, CO_2, H_2S (MultiRAE PLUS-PGM-50 and/or VRAE PGM-7,800 or equivalent)	Continuous	Work will cease when CO EXCEEDS 100 ppm. Allow to vent-retest.
X VRAE PGM-7,800 or equivalent	Continuous	Work will cease if H_2S exceeds 5-50 ppm for 1 minute.
X MIE-PDR or equivalent	Continuous	Level C – If exceeds 5 mg/M^3 for 1 minute.
X Additional Monitoring	Continuous	Level C – Any intolerable continuous or excessive odors

Levels of protection will be upgraded as necessary based on action levels of the site-specific contaminant of concern. It is the responsibility of the SSO to notify the subcontractors of the PPE upgrade. Only the on-site SSO with the consent of the HSO can downgrade to a lower level. Changes will be made in writing.

5.3 AIR MONITORING EQUIPMENT CALIBRATION/INFORMATION

_X_ PID

A single calibration conducted daily prior to an activity is required after which calibration gas must be used as per Health and Safety "Standard Operating Procedures" (SOP). If the reading deviates more than +15 percent from concentration of the calibration gas, the instrument requires maintenance.

_X_ MultiRAE 2000 Model PGM-7600

Continuous monitoring for VOC. This real time monitoring instrument is capable of sensing and measuring VOC at a range of 1.0 to 2,000 ppm.

_X_ VRAE PGM-7,800

Sensors include new RAE dual range 0-100% Volume and 0-100% LEL, oxygen and three, smart, interchangeable toxic sensors or up to four smart, interchangeable toxic sensors may be added. The internal pump automatically shuts off plus an alarm is activated, if the remote probe tubing crimps or water is sucked onto the field replaceable hydrophobic filter. User selectable, calibrated sensor analog output is available in addition to data logging.

6.0 SITE CONTROL/ACCESS

In order to contain the potential spread of contamination from the Site, a Site control program will be established. This includes establishing site work zones and decontamination procedures. All SESI employees must follow these site control restrictions.

6.1 ESTABLISHMENT OF SITE WORK ZONES

Permanent site work zones have not been defined for this project. The location of the site work zones will change as the work and the type of activity is performed. The HSO determines the immediate site zones for each phase and task of the project.

The following three-zone approach will be employed.

- Exclusion Zone (EZ or Hot Zone) – This is defined as the area where the greatest potential for exposure exists. Exclusion zones for site disruption activities will be determined by the SSO. The zone will be set up so as to be protective of workers outside the exclusion zone, in terms of dust/vapor levels. Exclusion zones for soil excavation and soil boring will be the immediate area in a radius of approximately 25 feet around the hand digging/drill rig or the blasting/pressure washing equipment

location. For surface soil and groundwater sampling, the exclusion zones may be limited to the immediate area of sampling. This zone will be clearly delineated by cones, tapes or other means. Personnel are not allowed in the EZ without the following:

- A work partner
- Appropriate PPE
- Medical authorization
- Training certification

- Contamination Reduction Zone (CRZ) – The CRZ is the area immediately adjacent to the EZ and where decontamination occurs and PPE is disposed.

- Support Zone (Clean Zone) – This is defined as the area in which no known potential contamination exists. Operation support activities will be set up in this area. Potentially contaminated personnel/material is not allowed in this zone, with the exception of appropriately packaged/ decontaminated and labeled samples. There should be no need for protective clothing to be worn in this area.

6.2 Site Housekeeping And Sanitation

The site will be kept in a neat, organized and orderly fashion. Items such as tools, equipment, etc., will be kept in tool chests/trucks, to minimize tripping and falling hazards. Used disposable clothing and equipment will be placed in a garbage bag and left on-site. The client/contractor is responsible for appropriate disposal of all the waste/contaminated materials at the Site, including the soil cuttings.

Appropriate sanitation will be used on Site. All individuals participating in field activities are expected to follow contamination avoidance practices and adhere to the recommended decontamination procedures.

7.0 MEDICAL SURVEILLANCE

All personnel participating in site disruption activities must comply with the Medical Surveillance requirements of 29 CFR 1910.120 (f). Additionally, all personnel must be certified as medically fit to use a respirator in accordance with 29 CFR 1910.134 (Respiratory Protection). Records including fit testing results and medical form stating that the person is fit to wear respirator are kept at SESI's office.

8.0 MATERIAL HANDLING AND DECONTAMINATION

One of the most important aspects of decontamination is the prevention of contamination. This will minimize worker exposure and cross-contamination of samples. Procedures for contamination avoidance include:

Personnel

- Do not walk through areas of obvious or known contamination
- Do not directly handle or touch contaminated materials
- Make sure that there are no cuts or tears on PPE

- Fasten all closures in suits, covering with tape, if necessary
- Particular care should be taken to protect any skin injuries
- Stay upwind of airborne contaminants
- Do not carry cigarettes, cosmetics, gum etc., into contaminated areas

Sampling/Monitoring

- When required by the HSO, cover instruments with clear plastic, leaving openings for sampling ports
- Bag sampling containers prior to placement of sample material

Heavy Equipment

- Care should be taken to limit the amount of contamination that comes in contact with the heavy equipment (augers, tires etc.)
- If contaminated tools are to be placed on non-contaminated equipment for transport to a decontamination area, plastic should be used to keep the equipment clean.
- Dust control measures may be needed on roads inside the Site boundaries.

8.1 DECONTAMINATION

Decontamination and material handling activities will be carried out within the appropriate work zones. A personnel decontamination area will be provided where surface contamination and outer protective equipment are removed.

8.1.1 Personnel Decontamination

All personnel shall pass through an outlined decontamination procedure when exiting the exclusion zone at each location. The system will include a gross wash and rinse for all clothing and boots worn in the EZ, as appropriate. All personnel will wash their hands, arms, neck and face after removing PPE in the wash facility located at the Site. Respirators, airline and any other personnel equipment that comes in contact with contaminated soils shall pass through a field wash/cleaning in the CRZ and a final wash/cleaning at the end of the day.

When needed, the generalized operations for decontamination at each of the identified levels of protection is as follows:

Level D: Segregated equipment drop, boot and glove wash, boot and glove rinse, tape removal, boot cover removal, outer glove removal, inner glove removal, and field wash.

Level C: Segregated equipment drop, boot cover and glove wash, boot cover and glove rinse, tape removal, boot cover removal, outer glove removal, (canister or mask change), rubber boot removal, splash suit removal, inner glove removal, and field wash.

Level B: NOT AUTHORIZED.

8.1.2 Equipment Decontamination

All equipment used in an exclusion zone will be decontaminated before it leaves the Site or is taken into a clean area. The decontamination area will provide for the containment of any wastewater from the decontamination process. Heavy equipment will be decontaminated by

pressure washing or other appropriate methods. The Client will be responsible for the disposal of any contaminated waste water.

8.1.3 Material Handling

All potentially contaminated solids and liquids will be handled in a manner as to prevent additional contamination. All discarded materials, waste materials or other objects shall be handled in such a way as to protect Site workers and the public from exposure to Site contaminants, preclude the potential for creating a sanitary hazard or causing litter to be left on Site. All potentially contaminated materials (e.g., clothing, gloves, etc.) will be bagged or drummed, as necessary, labeled and segregated for disposal. All non-contaminated materials shall be collected and bagged for appropriate disposal as normal domestic waste. The client shall be responsible for disposal of all waste material at the Site.

9.0 EMERGENCY PROCEDURES

9.1 PRE-EMERGENCY PLANNING

Pre-emergency planning consists of this emergency response plan, assigning emergency functions to on-site personnel, training of personnel as necessary and ensuring that emergency procedures and equipment are in place.

Emergency telephone numbers, directions and a route map to the nearest hospital are presented in Sections 9.7 & 9.8.

9.2 EVACUATION

In the event of an emergency situation, such as fire, explosion or significant release of toxic gases, an air horn or other appropriate device will be sounded for approximately 10 seconds indicating the initiation of evacuation procedures. All personnel will evacuate and assemble near the Support Zone. The location shall be upwind of the Site where possible. For efficient and safe site evacuation and assessment of the emergency situation, the emergency coordinator will have the authority to initiate action if outside services are required. Under no circumstances will incoming personnel or visitors be allowed to proceed into the area once the emergency signal has been given. The HSO or designee must see that access for emergency equipment is provided and that all equipment has been shut down and secured once the alarm has sounded. Once the safety of all personnel is established, the emergency response groups will be notified, as necessary.

9.3 EMERGENCY MEDICAL TREATMENT AND FIRST AID

In the event of a safety or health emergency at the Site, appropriate emergency measures will immediately be taken. The Project Manager will be immediately informed of any serious injuries. Following decontamination, the injured person will be transported to the nearest medical facility, if necessary.

If an employee working in a contaminated area is physically injured, first-aid procedures should be followed. Depending on the severity of the injury, emergency medical response may be sought. Emergency telephone numbers will be posted on Site.

If the injury to a worker is chemical in nature (e.g., overexposure), the following first-aid procedures will be followed.

- Eye Exposure – Wash the eyes immediately at the emergency eyewash station for at least 15 minutes, using large amounts of water and lifting the lower and upper lids occasionally to help flush the eye. Do not rub eyes or keep eyes tightly closed. Obtain medical attention immediately.
- Skin Exposure - Use copious amounts of soap and water to wash/rinse the affected area thoroughly, then provide appropriate medical attention. For reddened or blistered skin, consult a physician.
- Ingestion – Do not induce vomiting!! Call poison control center or seek medical help.
- Inhalation – Move the person to fresh air. If breathing has stopped, perform artificial respiration. Obtain medical attention as soon as possible.

9.4 EMERGENCY DECONTAMINATION

If emergency first aid and/or medical treatment is required, normal decontamination procedures may need to be abbreviated or omitted. The Site HSO or designee will accompany contaminated victims to the medical facility to advise on matters involving decontamination, when necessary. The outer garments can be removed if they do not cause delays, interfere with treatment or aggravate the problem. Respiratory equipment must always be removed. Protective clothing can be cut away. If the outer contaminated garments cannot be safely removed, a plastic barrier between the individual and clean surfaces should be used to help prevent contaminating the inside of ambulances and/or medical personnel. Outer garments are then removed at the medical facility. No attempt will be made to wash or rinse the victim, unless it is known that the individual has been contaminated with an extremely toxic or corrosive material, which could also cause severe injury or loss of life to emergency response personnel. For minor medical problems or injuries, the normal decontamination procedures will be followed. Note that heat stroke requires prompt treatment to prevent irreversible damage or death. Protective clothing must be promptly removed. Less serious forms of heat stress also require prompt attention and removal of protective clothing immediately. Unless the victim is obviously contaminated, decontamination should be omitted or minimized and treatment begun immediately.

9.5 ACCIDENT/INCIDENT REPORTING

As soon as first aid and/or emergency response needs have been met, the following parties are to be contacted:

1. Health and Safety Officer
2. Project Manager
3. The employer of any injured worker, if not an employee

Written confirmation of verbal reports are to be submitted within 24 hours by the HSO or designee. The report form entitled "Accident Data Report", found in Appendix A, is to be used for this purpose. All representatives, contacted by telephone, are to receive a copy of this report. If the employee involved is not an employee of SESI, their employer shall receive a copy of this report.

For reporting purposes, the term accident refers to fatalities, lost time injuries, spill or exposure to hazardous materials (radioactive, toxic, explosive, flammable or corrosive), fire, and explosion, damage to property or potential occurrence of the above.

Any information released from the health care provider, which is not deemed confidential patient information, is to be attached to the appropriate form. Any medical information, which is released by patient consent, is to be filed in the individual's medical records and treated as confidential.

9.6 ADVERSE WEATHER CONDITIONS

In the event of adverse weather conditions, the HSO or designee will determine if work can continue without compromising the health and safety of field personnel. Some of the factors to be considered prior to determining if work should continue are the following:

- Potential for heat/cold stress and related illnesses
- Treacherous weather-related working conditions, e.g., heavy rain, fog, high winds, lightning, storms, etc.

Site activities will be limited to daylight hours (unless adequate artificial lighting that meets Federal standard 1910.170 is provided) and acceptable weather conditions.

9.7 EMERGENCY CONTACT INFORMATION

The following section(s) provides the emergency telephone numbers, and hospital directions/contacts.

TABLE 3 Emergency Telephone Numbers

EMERGENCY	DIAL 911
MidHudson Regional Hospital of Westchester Medical Center-Emergency Department	(845) 483-5000
Police Emergency (Sullivan County Sheriff)	911
Fire Emergency	911
Rescue Squad	911
N.Y. Poison Control Center	(800) 222-1222
National Response Center and Terrorist Hotline	(800) 424-8802
American Association of National Poison Control	(800) 222-1222
Center for Disease Control	(800) 311-3435
Utility Mark-Out	(800) 962-7962
Nearest Phone	NA
Radio Channel	NA

9.8 HOSPITAL INFORMATION AND DIRECTIONS

MIDHUDSON REGIONAL HOSPITAL OF WESTCHESTER MEDICAL CENTER
241 North Rd, Poughkeepsie, NY 12601

(845)-483-5000

Directions to Hospital

Head East on Dutchess Avenue
Turn Left onto N. Water Street
Turn Right onto Dutchess Ave/Hoffman Street
Turn Right onto Talmadge Street
Turn Left onto Bain Avenue
Turn Left onto Washington Street
Turn Right onto Clark Street
Continue onto Garden State Exd
Turn Left onto Webster Avenue
Midhudson Regional Hospital of Westchester Medical Center will be on the Right

Hospital Location Map is on Figure 2.

10.0 SAFE WORK PRACTICES

In order to protect the health and safety of project personnel, safe work practices will be established and implemented for Site tasks.

10.1 ROUTINE SAFE WORK PRACTICES

- Ignition sources in the vicinity of potentially flammable material are prohibited. When working in areas where flammable vapors may be present, particular care must be exercised with tools and equipment that may be sources of ignition. All tools and equipment must be properly bonded and/or grounded.

- Approved and appropriate safety equipment as specified in this HASP shall be worn where required.

- Beards that interfere with respirator fit are not allowed for field personnel within the Site boundaries, as all Site field personnel may be called upon to use respirator protection in some situation, and beards do not allow for proper respirator fit.

- No smoking, eating or drinking is allowed in the contaminated areas. Contaminated tools and hands must be kept away from the face. Do not unnecessarily touch a contaminated surface or allow your clothing, tools or other equipment to do so.

- Persons with long hair and/or loose fitting clothing that could become tangled in power equipment must take adequate precaution.

10.2 PERSONNEL SAFETY

- Do not climb over or under obstacles.
- Always use the buddy system and line-of-sight.
- Practice contamination prevention on and off-site.
- Plan activities ahead of time.
- Apply immediate first aid to any and all cuts, scratches and abrasions.
- Report all accidents, no matter how minor, immediately to the HSO.
- Be alert to your own physical condition. Watch your buddy for signs of fatigue and/or exposure.
- Initiate a work/rest regime if ambient temperatures and protective clothing create a potential heat/cold stress situation. Refer to Appendices B and C for additional information regarding heat and cold stress.
- Do not proceed with work unless adequate natural light exists and appropriate supervision is present.

10.3 SAFETY PROCEDURES IN EXCLUSION ZONE

- All work locations identified as exclusion zones shall be demarcated using wooden stakes and flagging tape or cones or by other means in a manner clearly visible to all Site personnel. Field personnel shall familiarize themselves with all excavation locations.
- Only authorized personnel shall be allowed in the exclusion zone. All unauthorized persons must remain a safe distance upwind during field activities in order to prevent exposure to potential hazards.
- Communications between personnel in the exclusion zone and the Command Post shall be maintained at all times.
- Line of sight and the buddy system shall be mandatory at all times.
- Prior to the start of activities in the exclusion zone, the HSO shall establish a well-defined emergency exit escape route from each operating area of the exclusion zone. The emergency escape routes shall be familiar to all field personnel involved with the operation and shall be reviewed by the HSO at Site briefings.
- The number of authorized personnel within the exclusion zone during each task shall be minimized to include only those personnel essential for that task.
- The size of the exclusion area around all work locations shall be determined by the HSO and shall be large enough to easily accommodate only those members of the field team actively engaged in the work, fire, emergency and Site operations equipment.
- Immediate access to a source of water with sufficient volume, flow rate and pressure must be available for quick drenching in cases of emergency.
- Proper absorbent material will be available in the exclusion zone and will be used promptly in areas where spills or leaks occur.
- Instrumentation used for monitoring shall consist of those devices specified in Section 5.2. Members of the field team shall not proceed with any task until the field team is wearing the task-designated personnel protective equipment specified in Section 4.1 (or as modified by the HSO in response to measured Site conditions). All instruments present shall be fully charged and properly calibrated.

10.4 OPERATION OF HEAVY EQUIPMENT

Only trained equipment operators as determined by the competent person will be allowed to operate heavy machinery on-site. The number of personnel in the vicinity of heavy equipment

operations and in contaminated areas shall be kept to a minimum. Those individuals not directly involved in work operations will be required to maintain a 30-foot distance so as not to interfere. All heavy equipment shall be properly maintained in a safe operating condition and be equipped with an audible back-up alarm.

11.0 TRAINING

11.1 GENERAL

In accordance with the SESI corporate policy, and pursuant to 29 CFR 1910.120, hazardous waste site workers shall, at the time of job assignment, have received a minimum, of 40 hours of initial health and safety training for hazardous waste site operations, unless otherwise noted in the above reference. At a minimum, the training shall have consisted of instruction in the topics outlined in the above reference. Personnel who have not met the requirements for initial training, or are not "current" in their training shall not be allowed to work at any Site activities in which they may be exposed to hazards (chemical or physical). For a Site worker to be considered "current" for training purposes, their date of last training (initial, refresher or manager/supervisory) must be within the last twelve months.

Completion of an accredited Health and Safety Training Course for Hazardous Waste Operations or an approved equivalent will fulfill the requirements of this section. See Appendix D.

Supervising personnel will complete an 8-hour training session for supervisors. Training will be certified by record and or certificate.

If Site operations require the use of Level B respiratory equipment, Site personnel required to use such equipment as part of their assignment, must have completed documented training with Level B equipment before beginning work in Level B in an exclusion zone. Where on-site training is necessary, the HSO will be responsible for the training.

11.2 SITE SPECIFIC TRAINING

Prior to commencement of field activities, all field personnel assigned to the project will be provided training that will specifically address the activities, procedures, monitoring and equipment for the Site operations. It will include Site and facility layout, hazards, and emergency services at the Site, and will highlight all provisions contained within this HASP. This training will also allow field workers to clarify anything they do not understand and to reinforce their responsibilities regarding safety and operations for their particular activity.

The Site specific training shall also provide information regarding potential health hazards specific to the Site contaminants, the likelihood of exposure and the precautionary measures including personal protective equipment and air and medical monitoring procedures to be implemented to protect against these hazards.

11.3 ADDITIONAL TRAINING

Additional training, if required for completion of field tasks during the project, will be identified and provided for field personnel as the work progresses.

11.4 On-Site Safety Briefings

Project personnel and visitors will be given periodic on-site health and safety (H&S) briefings by the HSO or designee, to assist Site personnel in safely conducting their work activities. The briefings will include information on new operations to be conducted, changes in work practices or the Site's environmental conditions. The briefings will also provide a forum to facilitate conformance with health and safety requirements and to identify H&S performance deficiencies noted during daily activities or as a result of H&S audits.

11.5 Subcontractor Training

All field subcontractor personnel will conduct work onsite in accordance with their HASP, and will meet the requirements of 29 CFR 1910.120(e), addressed above.

12.0 LOGS, REPORTS AND RECORDKEEPING

The following is a summary of required health and safety logs, reports and record keeping for the operations at the subject site.

12.1 HASP Field Change Request

To be completed for initiating a change to the HASP. Project Manager approval is required. The original will be kept in the project file. (Appendix E)

12.2 Medical and Training Records

The HSO must obtain and keep a log of personnel meeting appropriate training and medical qualifications for the site work. The log will be kept in the project file. The Human Resources Manager will maintain medical records, in accordance with 29 CFR 1910.1020.

12.3 Exposure Records

Any personal monitoring results, laboratory reports, calculations and air sampling data sheets are part of an employee exposure record. These records will be kept in accordance with 29 CFR 1910.1020. For SESI employees, the originals will be sent to the Human Resources Manager. For subcontractor employees, the original will be sent to the subcontractor employer with a copy kept in the project file.

12.4 Accident/Incident Report

An accident/incident report must be completed following procedures given in Section 8 of this HASP. The originals will be sent to the Human Resources Manager for maintenance. A copy of the forms will be kept in the project file. (See Appendix A)

12.5 OSHA Form 200

An OSHA Form 200 (Log of Occupational Injuries and Illnesses) will be kept at the project Site. All recordable injuries or illnesses will be recorded on this form. At the end of the project, the original will be sent to the Human Resources Manager for maintenance. Subcontractor employees must also meet the requirements of maintaining an OSHA 200 Form. The accident/incident report meets the requirements of the OSHA Form 101 (Supplemental Record), which must be maintained with the OSHA Form 200 for all recordable injuries or illnesses.

12.6 On-Site Health and Safety Field Log Books

The HSO or designee will maintain an on-site health and safety log book in which daily Site conditions, activities, personnel, and significant events will be recorded. Calibration records and

personnel monitoring results, if any available, will also be recorded in field log book. The original log book will be kept in the project file.

Whenever any personnel monitoring is conducted on-site, the monitoring results will be noted in the field log book. These will become part of the exposure records file and will be maintained by the Human Resources Manager.

A signatory page is included (Appendix F) and is to be signed by those working on/visiting the site.

12.7 MATERIAL SAFETY DATA SHEETS

Material Safety Data Sheets (MSDS) will be obtained and kept on file at the project Site for each hazardous chemical known to exist on site, brought to, used or stored at the Site. The MSDS shall be incorporated into this HASP as Appendix G and will be kept in the project file.

13.0 SITE SPECIFIC ELEMENTS OF THE HASP

13.1 GENERAL SITE BACKGROUND

The Site was wholesale lumber company and pressure-treated lumber using chromated copper arsenate ("CCA"). The Site contaminants of concern are arsenic, copper and chromium (breakdown products from copper chromated arsenate, or CCA) that are attached to the Site soils.

13.2 EVALUATION OF HAZARDS

The evaluation of hazards is provided as a quick reference as to the known conditions for the Site, wherein the level of detail for each of the subsections is identified.

13.2.1 Hazard Characteristics

Existing information for Site:

__X__ Detailed _____ Preliminary _____ None

Hazardous/Contaminated Material Form(s):

__X__ Solid _____ Liquid _____ Sludge _____ Gas _____ Vapor

Containment Type(s):

_____ Drum _____ Tank _____ Pit _____ Debris
_____ Pond _____ Lagoon Other:

Hazardous Material Characteristics:

_____ Volatile _____ Corrosive _____ Reactive _____ Radioactive
_____ Ignitable __X__ Toxic _____ Unknown

Routes of Exposure:

__X__ Oral __X__ Dermal _____ Eye _____ Respiratory

13.2.2 Potential Health and Safety Hazards

__X__ Heat _____ Congested areas
__X__ Cold __X__ General Construction
_____ Confined space entry __X__ Physical injury
_____ Oxygen depletion _____ Electrical hazards

_____ Asphyxiation
_____ Excavation
_____ Cave-ins
__X__ Falls, slippage
__X__ Heavy equipment
__X__ Other: Potential Ignition Hazard.
_____ Handling and product transfer
_____ Fire
_____ Explosion
__X__ Biological Hazards
_X_ Plants – Poison Ivy, Poison Oak
_X_ Insects – Ticks
_X_ Insects – Mosquitoes
_X_ Insects – Bees and Wasps
_X_ Rats and Mice
_____ Non-ionizing Radiation (i.e. UV, IR, etc.)

13.2.3 Hazard Identification/Ranking

The Hazard Identification is provided as a rudimentary guide for the potential level of hazard associated with each of the tasks/operations that will completed on site. The definition of hazard as it applies to this section may include both chemical contamination hazards as well as operational hazards such as trip falls, equipment operations, and weather. These Tasks reflect the Scope of Work identified in Section 2 of this document.

Environmental Sample Collection and Subsurface Drilling

OVERALL HAZARD: **Low** _____ **Medium** _**X**__ **High** ____

13.3 ENVIRONMENTAL SAMPLE COLLECTION AND SUBSURFACE DRILLING

General

Sampling is limited to soil sampling of stockpiles from off-site sources, if needed

Personnel Training

All personnel involved in the field work will be trained in accordance with OSHA's Hazwoper requirements in 29 CFR 1910.120. In addition, the operator will have to show compliance with current OSHA fit testing regulations.

OVERALL HAZARD: _____ Serious __X__ Moderate _____ Low _____ Unknown

Caution must be taken at all times when doing any type of intrusive work within the uncontrolled landfills.

13.3.1 Contaminants of Concern

The primary contaminants that have been identified at the Site and the media in which they are present are listed below:

Metals	Concentration (ppm or ppb)	Media	Applicable Monitoring Instrument
arsenic	36 ppm	soil	Not Applicable

TABLE 4 - ACTION LEVELS FOR AIR MONITORING (ABSENCE OF BENZENE)			
Instrument	**Reading**	**Level of Respiratory Protection/Action**	**Cartridge Change Schedule**
PID/FID Action Levels:			
PID/FID (non methane)	Bkgd[1] - 0.5 ppm (NT[2] in breathing zone)	Level D – No respirators	
PID/FID (non methane)	10 – 1000 ppm for 1 minute	Level C	If Breakthrough or Note 3 Level C Episodes
PID/FID (non methane)	Over 100 ppm for 1 minute	**Evacuate**	
CGI/O_2 Meter Action Level			
CGI/O_2	0% - 10% LEL in excavation/trench	Proceed with caution. Continue monitoring.	
CGI/O_2	> 10% LEL excavation/trench	Stop work, allow to vent/purge	
CGI/O_2	< 19.5% O_2	Evacuate – Allow to purge	
CGI/O_2	> 23.5% O_2	Stop work. Evacuate – Allow to purge Ascertain source of O_2	
MiniRAE or other Gas Monitor Action Level			
CO	50-100 ppm for 1 minute	Stop work; allow to purge; re-test	
CO	Above 100 PPM	Evacuate; allow to purge	
H_2S	10-50 ppm for 1 minute	Stop work; allow to purge; re-test	
H_2S	Above 50 ppm	Evacuate; allow to purge	

Note: The Project Manager/Field Operations Lead always has the option to "fall back" to an area of lower exposure in order to avoid upgrading the level of protection.

[1] Bkgd - Background

[2] NT - Non Transient

[3] AL is low as the relative response of the PID is 2.5 times less than that for benzene

TABLE 5 - ACTION LEVELS FOR AIR MONITORING (BENZENE PRESENT)			
Instrument	**Reading**	**Level of Respiratory Protection/Action**	**Cartridge Change Schedule**
PID/FID Action Levels:			
PID/FID (non methane)	Bkgd - 0.5 ppm (NT in breathing zone)	Level D	
PID/FID (non methane)	> 0.5 ppm (NT above Bkgd)	User detector tube for Benzene	
PID/FID (non methane)	Benzene confirmed at or above 0.5 ppm		
PID/FID (non methane)	0 - 5 ppm (NT above Bkgd)	Level D	
PID/FID (non methane)	> 5 - 25 ppm (NT above Bkgd)	Level C	Every 4 hours
PID/FID (non methane)	> 25 ppm (NT above Bkgd)	Stop work consult with PM and/or HSM	
CGI/O_2 Meter Action Level			
CGI/O_2	0% - 10% LEL in excavation/trench	Proceed with caution. Continue monitoring.	
CGI/O_2	> 10% LEL excavation/trench	Stop work, allow to vent/purge	
CGI/O_2	< 19.5% O_2	Evacuate	
CGI/O_2	> 23.5% O_2	Stop work. Ascertain source of O_2	

Note: The Project Manager/Field Operations Lead always has the option to "fall back" to an area of lower exposure in order to avoid upgrading the level of protection. If any breakthrough is experienced in terms of odor, taste or irritation while wearing the respirator, personnel shall immediately exit the exclusion zone and report the incident to the HSM. The cartridge change schedule shall be revisited and modified as necessary or personnel may be required to upgrade to Level B respiratory protection.

FIGURES

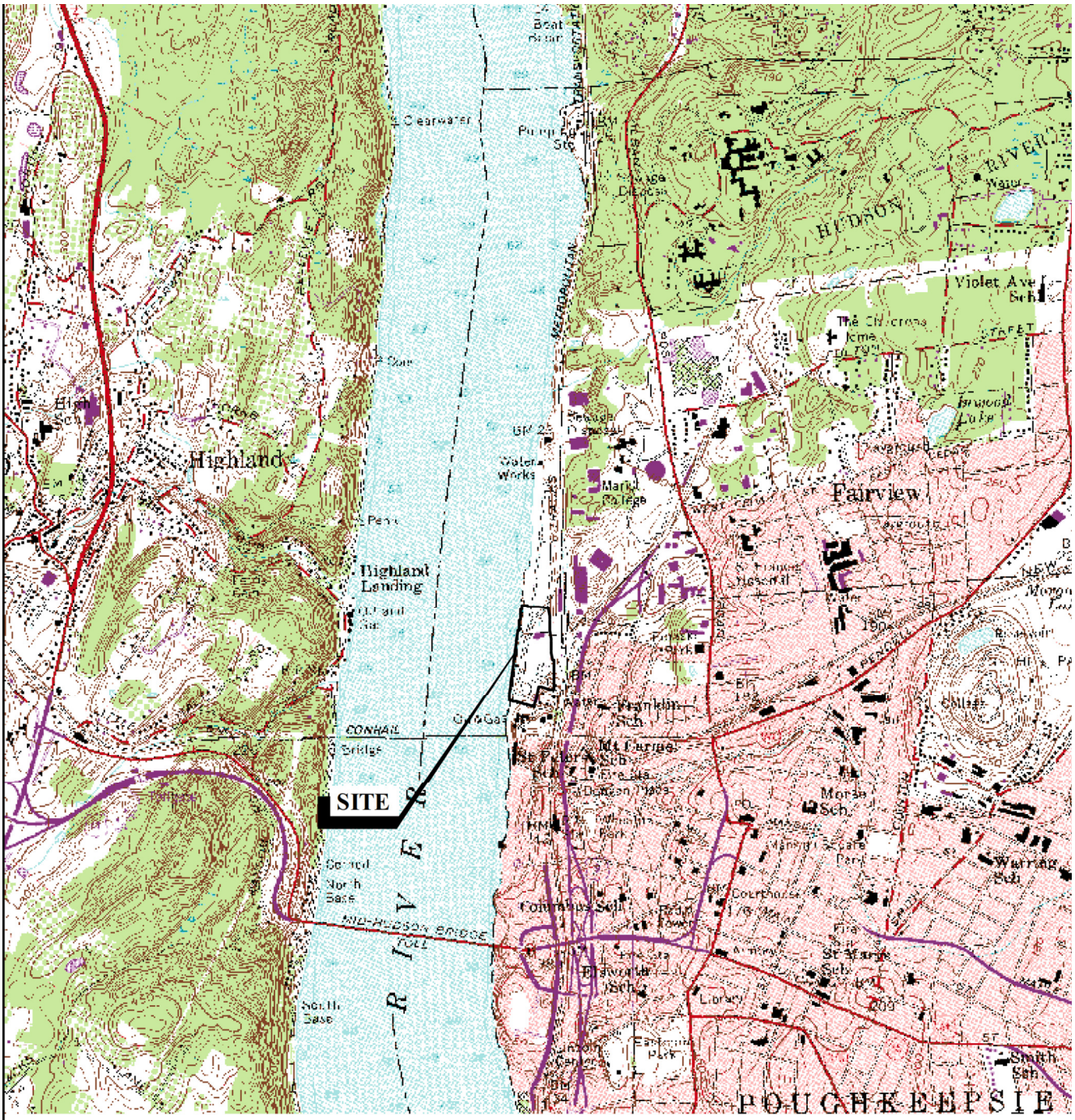

MAP REFERENCE
THIS MAP WAS PREPARED FROM THE FOLLOWING 7.5 MINUTE USGS MAP:
Poughkeepsie, 1957 Photorevised 1982.

FIGURE 1.1

PROPERTY LOCATION MAP
FORMER A.C. DUTTON LUMBER YARD
1 DUTCHESS AVENUE AND 2 HOFFMAN STREET
POUGHKEEPSIE, NEW YORK

SITE PLAN

SESI
CONSULTING ENGINEERS, PC
SOILS / FOUNDATIONS
SITE DESIGN
ENVIRONMENTAL
12A MAPLE AVE. PINE BROOK, N.J. 07058 PH: 973-808-9050

DRAWN BY: YY
CHECKED BY: FD
SCALE: N.T.S.
DATE: 12/17/14
JOB NO.: 8604

N:\ACAD\8604\8604- FIG -1.1 NEW.dwg, 12/17/2014 3:49:54 PM

Hospital Route Map

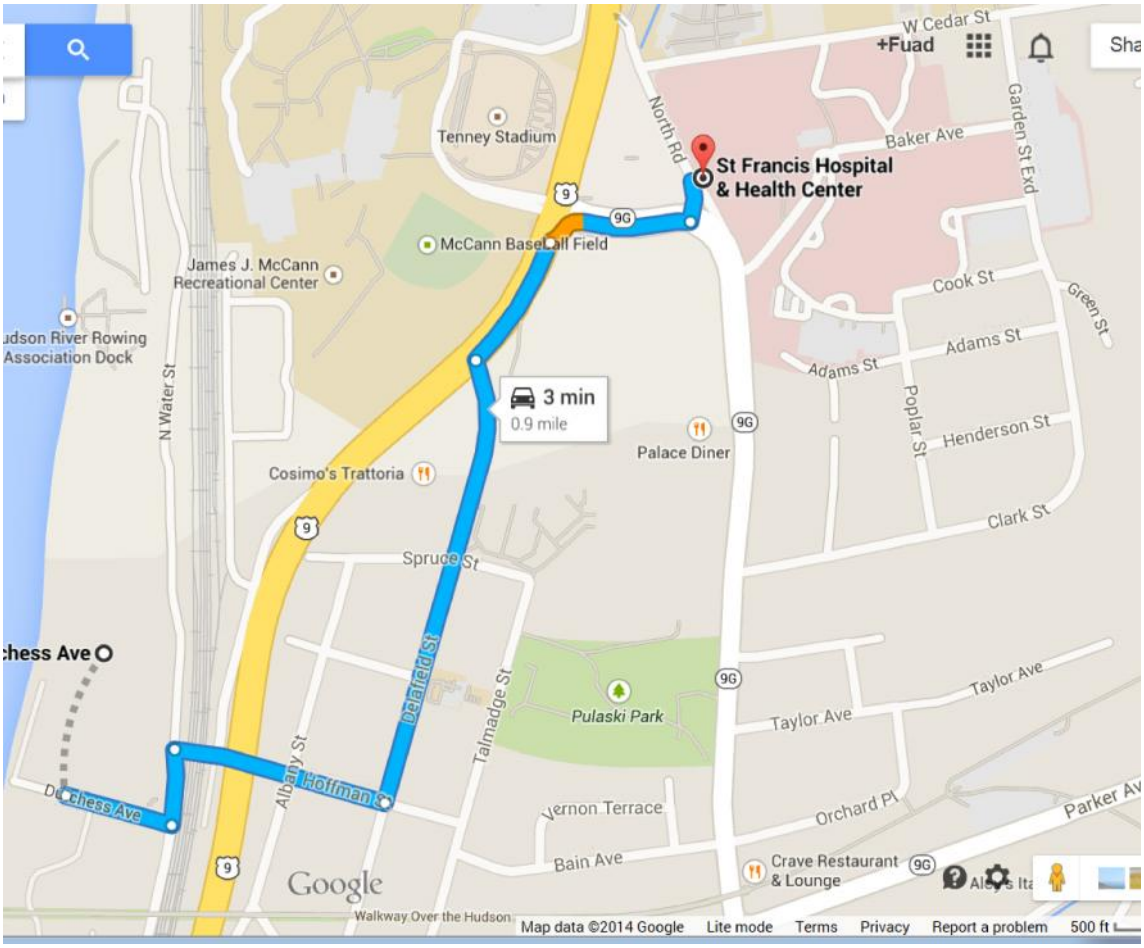

<u>Location of Hospital</u>
St. Francis Hospital and Health Center
243 North Road, Poughkeepsie, NY
(845) 483-5000

APPENDIX A

Accident/Incident Report

Accident/Incident Reporting Policy

A. As soon as first aid/or Emergency response needs have been met, the following parties are to be contacted by telephone.

1. HSO
2. HSM
3. PM
4. The employer of any injured worker under subcontract;

B. Written confirmation of verbal reports are to be submitted within 48 hours. The report form entitled "Accident/Incident Report Form" is to be used for this purpose. All representatives contacted by phone are to receive a copy of this report.

C. For reporting purposes, the term accident refers to fatalities, lost time injuries, spill or exposure to hazardous materials (chemical process materials, radioactive materials, toxic materials, explosive or flammable materials), theft of hazardous materials, fire, explosion, or property damage in excess of $500.00.

D. Any information released from the health care provider, which is not deemed confidential patient information, is to be attached to the appropriate form.

Any medical information which is released by patient consent is to be filed in the individuals health and safety records and treated as confidential.

WITNESS TO ACCIDENT/INCIDENT:

Name: _____ Company: _____

Address: _____

Phone No.: _____

Name: _____ Company: _____

Address: _____

Phone No.: _____

INJURED - ILL

Name: _____

Address: _____

SSN: _____ Age: _____

Length of Service: _____ Time on Present Job: _____

Title/Classification: _____

SEVERITY OF INJURY OR ILLNESS:

_____ Disabling _____ Non-Disabling _____ Fatality

_____ Medical Treatment _____ First Aid Only

ESTIMATED NUMBER OF DAYS AWAY FROM JOB: _____

NATURE OF INJURY OR ILLNESS: _____

_____

_____

_____

_____

_____

_____

_____

_____

_____

_____

_____

Personal factors (attitude, knowledge or skill, reaction time, fatigue): _____

_____

_____

_____

_____

ON SITE ACCIDENTS/INCIDENTS

Level of personal protection equipment required in Site Safety Plan: _____

_____

_____

_____

_____

Modifications: _____

_____

Was injured using required equipment?: _____

_____

_____

If not, how did actual equipment use differ from plan: _____

_____

_____

_____

ACTION TAKEN TO PREVENT RECURRENCE: (Be specific. What has or will be done? When will it be done? Who is the responsible party to insure that the correction if made?) _____

_____

_____

_____

_____

_____

_____

_____

_____

APPENDIX B

Heat Stress

Section III: Chapter 4

Heat Stress

Table of Contents:

I. Introduction
II. Heat Disorders and Health Effects
III. Investigation Guidelines
IV. Sampling Methods
V. Control
VI. Personal Protective Equipment
VII. Bibliography

List of Appendices:

Appendix III:4-1 Heat Stress: General Workplace Review
Appendix III:4-2 Heat Stress-Related Illness or Accident Follow-Up
Appendix III:4-3 Measurement of Wet Bulb Globe Temperature

The mention of trade names, commercial products, or organizations does not imply endorsement by OSHA or the U.S. Government.

I. Introduction

Operations involving high air temperatures, radiant heat sources, high humidity, direct physical contact with hot objects, or strenuous physical activities have a high potential for inducing heat stress in employees engaged in such operations. Such places include: iron and steel foundries, nonferrous foundries, brick-firing and ceramic plants, glass products facilities, rubber products factories, electrical utilities (particularly boiler rooms), bakeries, confectioneries, commercial kitchens, laundries, food canneries, chemical plants, mining sites, smelters, and steam tunnels.

Outdoor operations conducted in hot weather, such as construction, refining, asbestos removal, and hazardous waste site activities, especially those that require workers to wear semipermeable or impermeable protective clothing, are also likely to cause heat stress among exposed workers.

A. Causal Factors

1. Age, weight, degree of physical fitness, degree of acclimatization, metabolism, use of alcohol or drugs, and a variety of medical conditions such as hypertension all affect a person's sensitivity to heat. However, even the type of clothing worn must be considered. Prior heat injury predisposes an individual to additional injury.
2. It is difficult to predict just who will be affected and when, because individual susceptibility varies. In addition, environmental factors include more than the ambient air temperature. Radiant heat, air movement, conduction, and relative humidity all affect an individual's response to heat.

B. Definitions

1. The American Conference of Governmental Industrial Hygienists (1992) states that workers should not be permitted to work when their deep body temperature exceeds 38°C (100.4°F).
2. **Heat** is a measure of energy in terms of quantity.
3. A **calorie** is the amount of heat required to raise 1 gram of water 1°C (based on a standard temperature of 16.5 to 17.5°C).
4. **Conduction** is the transfer of heat between materials that contact each other. Heat passes from the warmer material to the cooler material. For example, a worker's skin can transfer heat to a contacting surface if that surface is cooler, and vice versa.
5. **Convection** is the transfer of heat in a moving fluid. Air flowing past the body can cool the body if the air temperature is cool. On the other hand, air that exceeds 35°C (95°F) can increase the heat load on the body.
6. **Evaporative cooling** takes place when sweat evaporates from the skin. High humidity reduces the rate of evaporation and thus reduces the effectiveness of the body's primary cooling mechanism.
7. **Radiation** is the transfer of heat energy through space. A worker whose body temperature is greater than the temperature of the surrounding surfaces radiates heat to these surfaces. Hot surfaces and infrared light sources radiate heat that can increase the body's heat load.

8. **Globe temperature** is the temperature inside a blackened, hollow, thin copper globe.
9. **Metabolic heat** is a by-product of the body's activity.
10. **Natural wet bulb (NWB) temperature** is measured by exposing a wet sensor, such as a wet cotton wick fitted over the bulb of a thermometer, to the effects of evaporation and convection. The term natural refers to the movement of air around the sensor.
11. **Dry bulb (DB) temperature** is measured by a thermal sensor, such as an ordinary mercury-in-glass thermometer, that is shielded from direct radiant energy sources.

II. Heat Disorders and Health Effects

A. Heat Stroke

Occurs when the body's system of temperature regulation fails and body temperature rises to critical levels. This condition is caused by a combination of highly variable factors, and its occurrence is difficult to predict. Heat stroke is a medical emergency. The primary signs and symptoms of heat stroke are confusion; irrational behavior; loss of consciousness; convulsions; a lack of sweating (usually); hot, dry skin; and an abnormally high body temperature, e.g., a rectal temperature of 41°C (105.8°F). If body temperature is too high, it causes death. The elevated metabolic temperatures caused by a combination of work load and environmental heat load, both of which contribute to heat stroke, are also highly variable and difficult to predict.

If a worker shows signs of possible heat stroke, professional medical treatment should be obtained immediately. The worker should be placed in a shady area and the outer clothing should be removed. The worker's skin should be wetted and air movement around the worker should be increased to improve evaporative cooling until professional methods of cooling are initiated and the seriousness of the condition can be assessed. Fluids should be replaced as soon as possible. The medical outcome of an episode of heat stroke depends on the victim's physical fitness and the timing and effectiveness of first aid treatment.

Regardless of the worker's protests, no employee suspected of being ill from heat stroke should be sent home or left unattended unless a physician has specifically approved such an order.

B. Heat Exhaustion

The signs and symptoms of heat exhaustion are headache, nausea, vertigo, weakness, thirst, and giddiness. Fortunately, this condition responds readily to prompt treatment. Heat exhaustion should not be dismissed lightly, however, for several reasons. One is that the fainting associated with heat exhaustion can be dangerous because the victim may be operating machinery or controlling an operation that should not be left unattended; moreover, the victim may be injured when he or she faints. Also, the signs and symptoms seen in heat exhaustion are similar to those of heat stroke, a medical emergency.

Workers suffering from heat exhaustion should be removed from the hot environment and given fluid replacement. They should also be encouraged to get adequate rest.

C. Heat Cramps

Are usually caused by performing hard physical labor in a hot environment. These cramps have been attributed to an electrolyte imbalance caused by sweating. It is important to understand that cramps can be caused by both too much and too little salt. Cramps appear to be caused by the lack of water replenishment. Because sweat is a hypotonic solution (±0.3% NaCl), excess salt can build up in the body if the water lost through sweating is not replaced. Thirst cannot be relied on as a guide to the need for water; instead, water must be taken every 15 to 20 minutes in hot environments.

Under extreme conditions, such as working for 6 to 8 hours in heavy protective gear, a loss of sodium may occur. Recent studies have shown that drinking commercially available carbohydrate-electrolyte replacement liquids is effective in minimizing physiological disturbances during recovery.

D. Heat Collapse ("Fainting")

In heat collapse, the brain does not receive enough oxygen because blood pools in the extremities. As a result, the exposed individual may lose consciousness. This reaction is similar to that of heat exhaustion and does not affect the body's heat balance. However, the onset of heat collapse is rapid and unpredictable. To prevent heat collapse, the worker should gradually become acclimatized to the hot environment.

E. Heat Rashes

Are the most common problem in hot work environments. Prickly heat is manifested as red papules and usually appears in areas where the clothing is restrictive. As sweating increases, these papules give rise to a prickling sensation. Prickly heat occurs in skin that is persistently wetted by unevaporated sweat, and heat rash papules may become infected if they are not treated. In most cases, heat rashes will disappear when the affected individual returns to a cool environment.

F. Heat Fatigue

A factor that predisposes an individual to heat fatigue is lack of acclimatization. The use of a program of acclimatization and training for work in hot environments is advisable. The signs and symptoms of heat fatigue include impaired performance of skilled sensorimotor, mental, or vigilance jobs. There is no treatment for heat fatigue except to remove the heat stress before a more serious heat-related condition develops.

III. Investigation Guidelines

These guidelines for evaluating employee heat stress approximate those found in the 1992-1993 ACGIH publication, Threshold Limit Values for Chemical Substances and Physical Agents and Biological Exposure Indices.

A. Employer and Employee Interviews

1. The inspector will review the OSHA 200 Log and, if possible, the OSHA 101 forms for indications of prior heat stress problems.
2. Following are some questions for employer interviews: What type of action, if any, has the employer taken to prevent heat stress problems? What are the potential sources of heat? What employee complaints have been made?

3. Following are some questions for employee interviews: What heat stress problems have been experienced? What type of action has the employee taken to minimize heat stress? What is the employer's involvement, i.e., does employee training include information on heat stress? (Appendix III:4-1 lists factors to be evaluated when reviewing a heat stress situation, and Appendix III:4-2 contains a follow-up checklist.)

B. Walkaround Inspection

During the walkaround inspection, the investigator will: determine building and operation characteristics; determine whether engineering controls are functioning properly; verify information obtained from the employer and employee interviews; and perform temperature measurements and make other determinations to identify potential sources of heat stress. Investigators may wish to discuss any operations that have the potential to cause heat stress with engineers and other knowledgeable personnel. The walkaround inspection should cover all affected areas. Heat sources, such as furnaces, ovens, and boilers, and relative heat load per employee should be noted.

C. Work-Load Assessment

1. Under conditions of high temperature and heavy workload, the CSHO should determine the work-load category of each job (Table III:4-1 and Figure III:4-1). Work-load category is determined by averaging metabolic rates for the tasks and then ranking them:
   1. Light work: up to 200 kcal/hour
   2. Medium work: 200-350 kcal/hour
   3. Heavy work: 350-500 kcal/hour
2. Cool Rest Area: Where heat conditions in the rest area are different from those in the work area, the metabolic rate (M) should be calculated using a time-weighted average, as follows:

   Equation III: 4-1. Average Metabolic Rate

   $Average_M = (M_1)(t_1)+ (M_2)(t_2)+...+(M_n)(t_n) / (t_1)+(t_2)+...(t_n)$

   where: M = metabolic rate

   t = time in minutes

   In some cases, a videotape is helpful in evaluating work practices and metabolic load.

FIGURE III:4-1. ACTIVITY EXAMPLES

- Light hand work: writing, hand knitting
- Heavy hand work: typewriting
- Heavy work with one arm: hammering in nails (shoemaker, upholsterer)
- Light work with two arms: filing metal, planing wood, raking the garden
- Moderate work with the body: cleaning a floor, beating a carpet
- Heavy work with the body: railroad track laying, digging, barking trees

Sample Calculation: Assembly line work using a heavy hand tool

Walking along - 2.0 kcal/min

Intermediate value between heavy work with two arms and light work with the body - 3.0 kcal/min

Add for basal metabolism - 1.0 kcal/min

Total: - 6.0 kcal/min

Source: ACGIH 1992

TABLE III:4-1. ASSESSMENT OF WORK

Body position and movement	**kcal/min***
Sitting	0.3
Standing	0.6
Walking	2.0-3.0
Walking uphill	add 0.8 for every meter (yard) rise

Type of work	**Average kcal/min**	**Range kcal/min**
Hand work		

Light	0.4	0.2-1.2
Heavy	0.9	
Work: One arm		
Light	1.0	0.7-2.5
Heavy	1.7	
Work: Both arms		
Light	1.5	1.0-3.5
Heavy	2.5	
Work: Whole body		
Light	3.5	2.5-15.0
Moderate	5.0	
Heavy	7.0	
Very heavy	9.0	

* For a "standard" worker of 70 kg body weight (154 lbs) and 1.8m^2 body surface (19.4 ft^2).

Source: ACGIH 1992

IV. Sampling Methods

A. Body Temperature Measurements

Although instruments are available to estimate deep body temperature by measuring the temperature in the ear canal or on the skin, these instruments are not sufficiently reliable to use in compliance evaluations.

B. Environmental Measurements

Environmental heat measurements should be made at, or as close as possible to, the specific work area where the worker is exposed. When a worker is not continuously exposed in a single hot area but moves between two or more areas having different levels of environmental heat, or when the environmental heat varies substantially at a single hot area, environmental heat exposures should be measured for each area and for each level of environmental heat to which employees are exposed.

C. Wet Bulb Globe Temperature Index

1. Wet Bulb Globe Temperature (WBGT) should be calculated using the appropriate formula in Appendix III:4-2. The WBGT for continuous all-day or several hour exposures should be averaged over a 60-minute period. Intermittent exposures should be averaged over a 120-minute period. These averages should be calculated using the following formula:

   Equation III:4-2. Average Web Bulb Globe Temperature (WBGT)

   $$\text{Average}_{WBGT} = (WBGT_1)(t_1)+ (WBGT_2)(t_2)+...+(WBGT_n)(t_n) / (t_1)+(t_2)+...(t_n)$$

   For indoor and outdoor conditions with no solar load, WBGT is calculated as:

   WBGT = 0.7NWB + 0.3GT

   For outdoors with a solar load, WBGT is calculated as

   WBGT = 0.7NWB + 0.2GT + 0.1DB

   where: WBGT = Wet Bulb Globe Temperature Index

   NWB = Natural Wet-Bulb Temperature

   DB = Dry-Bulb Temperature

   GT = Globe Temperature

2. The exposure limits in Table III:4-2 are valid for employees wearing light clothing. They must be adjusted for the insulation from clothing that impedes sweat evaporation and other body cooling mechanisms. Use Table III:4-3 to correct Table III:4-2 for various kinds of clothing.
3. Use of Table III:4-2 requires knowledge of the WBGT and approximate workload. Workload can be estimated using the data in Table III:4-1, and sample calculations are presented in Figure III:4-1.

D. Measurement

Portable heat stress meters or monitors are used to measure heat conditions. These instruments can calculate both the indoor and outdoor WBGT index according to established ACGIH Threshold Limit Value equations. With this information and information on the type of work being performed, heat stress meters can determine how long a person can safely work or remain in a particular hot environment. See Appendix III:4-2 for an alternate method of calculation.

TABLE III:4-2. PERMISSIBLE HEAT EXPOSURE THRESHOLD LIMIT VALUE

	---------- Work Load* ----------		
Work/rest regimen	**Light**	**Moderate**	**Heavy**
Continuous work	30.0°C (86°F)	26.7°C (80°F)	25.0°C (77°F)
75% Work, 25% rest, each hour	30.6°C (87°F)	28.0°C (82°F)	25.9°C (78°F)
50% Work, 50% rest, each hour	31.4°C (89°F)	29.4°C (85°F)	27.9°C (82°F)
25% Work, 75% rest, each hour	32.2°C (90°F)	31.1°C (88°F)	30.0°C (86°F)

*Values are in °C and °F, WBGT.

These TLV's are based on the assumption that nearly all acclimatized, fully clothed workers with adequate water and salt intake should be able to function effectively under the given working conditions without exceeding a deep body temperature of 38°C (100.4° F). They are also based on the assumption that the WBGT of the resting place is the same or very close to that of the workplace. Where the WBGT of the work area is different from that of the rest area, a time-weighted average should be used (consult the ACGIH 1992-1993 Threshold Limit Values for Chemical Substances and Physical Agents and Biological Exposure Indices (1992).

These TLV's apply to physically fit and acclimatized individuals wearing light summer clothing. If heavier clothing that impedes sweat or has a higher insulation value is required, the permissible heat exposure TLV's in Table III:4-2 must be reduced by the corrections shown in Table III:4-3.

Source: ACGIH 1992.

E. Other Thermal Stress Indices

1. The Effective Temperature index (ET) combines the temperature, the humidity of the air, and air velocity. This index has been used extensively in the field of comfort ventilation and air-conditioning. ET remains a useful measurement technique in mines and other places where humidity is high and radiant heat is low.
2. The Heat-Stress Index (HSI) was developed by Belding and Hatch in 1965. Although the HSI considers all environmental factors and work rate, it is not completely satisfactory for determining an individual worker's heat stress and is also difficult to use.

TABLE III:4-3. WBGT CORRECTION FACTORS IN °C

	Clothing type	**Clo* value**	**WBGT correction**
	Summer lightweight working clothing	0.6	0
	Cotton coveralls	1.0	-2
	Winter work clothing	1.4	-4
	Water barrier, permeable	1.2	-6

*Clo: Insulation value of clothing. One clo = 5.55 kcal/m^2/hr of heat exchange by radiation and convection for each degree °C difference in temperature between the skin and the adjusted dry bulb temperature.

Note: Deleted from the previous version are trade names and "fully encapsulating suit, gloves, boots and hood" including its clo value of 1.2 and WBGT correction of -10.

Source: ACGIH 1992

V. Control

Ventilation, air cooling, fans, shielding, and insulation are the five major types of engineering controls used to reduce heat stress in hot work environments. Heat reduction can also be achieved by using power assists and tools that reduce the physical demands placed on a worker.

However, for this approach to be successful, the metabolic effort required for the worker to use or operate these devices must be less than the effort required without them. Another method is to reduce the effort necessary to operate power assists. The worker should be allowed to take frequent rest breaks in a cooler environment.

A. Acclimatization

1. The human body can adapt to heat exposure to some extent. This physiological adaptation is called acclimatization. After a period of acclimatization, the same activity will produce fewer cardiovascular demands. The worker will sweat more efficiently (causing better evaporative cooling), and thus will more

easily be able to maintain normal body temperatures.

2. A properly designed and applied acclimatization program decreases the risk of heat-related illnesses. Such a program basically involves exposing employees to work in a hot environment for progressively longer periods. NIOSH (1986) says that, for workers who have had previous experience in jobs where heat levels are high enough to produce heat stress, the regimen should be 50% exposure on day one, 60% on day two, 80% on day three, and 100% on day four. For new workers who will be similarly exposed, the regimen should be 20% on day one, with a 20% increase in exposure each additional day.

B. Fluid Replacement

Cool (50°-60°F) water or any cool liquid (except alcoholic beverages) should be made available to workers to encourage them to drink small amounts frequently, e.g., one cup every 20 minutes. Ample supplies of liquids should be placed close to the work area. Although some commercial replacement drinks contain salt, this is not necessary for acclimatized individuals because most people add enough salt to their summer diets.

C. Engineering Controls

1. **General ventilation** is used to dilute hot air with cooler air (generally cooler air that is brought in from the outside). This technique clearly works better in cooler climates than in hot ones. A permanently installed ventilation system usually handles large areas or entire buildings. Portable or local exhaust systems may be more effective or practical in smaller areas.
2. **Air treatment/air cooling** differs from ventilation because it reduces the temperature of the air by removing heat (and sometimes humidity) from the air.
3. **Air conditioning** is a method of air cooling, but it is expensive to install and operate. An alternative to air conditioning is the use of chillers to circulate cool water through heat exchangers over which air from the ventilation system is then passed; chillers are more efficient in cooler climates or in dry climates where evaporative cooling can be used.
4. **Local air cooling** can be effective in reducing air temperature in specific areas. Two methods have been used successfully in industrial settings. One type, cool rooms, can be used to enclose a specific workplace or to offer a recovery area near hot jobs. The second type is a portable blower with built-in air chiller. The main advantage of a blower, aside from portability, is minimal set-up time.
5. Another way to reduce heat stress is to increase the air flow or **convection** using fans, etc. in the work area (as long as the air temperature is less than the worker's skin temperature). Changes in air speed can help workers stay cooler by increasing both the convective heat exchange (the exchange between the skin surface and the surrounding air) and the rate of evaporation. Because this method does not actually cool the air, any increases in air speed must impact the worker directly to be effective. If the dry bulb temperature is higher than 35°C (95°F), the hot air passing over the skin can actually make the worker hotter. When the temperature is more than 35°C and the air is dry, evaporative cooling may be improved by air movement, although this improvement will be offset by the convective heat. When the temperature exceeds 35°C and the relative humidity is 100%, air movement will make the worker hotter. Increases in air speed have no effect on the body temperature of workers wearing vapor-barrier clothing.
6. **Heat conduction** methods include insulating the hot surface that generates the heat and changing the surface itself.
7. Simple engineering controls, such as shields, can be used to reduce radiant **heat,** i.e. heat coming from hot surfaces within the worker's line of sight. Surfaces that exceed 35°C (95°F) are sources of infrared radiation that can add to the worker's heat load. Flat black surfaces absorb heat more than smooth, polished ones. Having cooler surfaces surrounding the worker assists in cooling because the worker's body radiates heat toward them. With some sources of radiation, such as heating pipes, it is possible to use both insulation and surface modifications to achieve a substantial reduction in radiant heat. Instead of reducing radiation from the source, shielding can be used to interrupt the path between the source and the worker. Polished surfaces make the best barriers, although special glass or metal mesh surfaces can be used if visibility is a problem. Shields should be located so that they do not interfere with air flow, unless they are also being used to reduce convective heating. The reflective surface of the shield should be kept clean to maintain its effectiveness.

D. Administrative Controls and Work Practices

1. Training is the key to good work practices. Unless all employees understand the reasons for using new, or changing old, work practices, the chances of such a program succeeding are greatly reduced.
2. NIOSH (1986) states that a good heat stress training program should include at least the following components:
   - Knowledge of the hazards of heat stress;
   - Recognition of predisposing factors, danger signs, and symptoms;
   - Awareness of first-aid procedures for, and the potential health effects of, heat stroke;
   - Employee responsibilities in avoiding heat stress;
   - Dangers of using drugs, including therapeutic ones, and alcohol in hot work environments;
   - Use of protective clothing and equipment; and
   - Purpose and coverage of environmental and medical surveillance programs and the advantages of worker participation in such programs.
3. Hot jobs should be scheduled for the cooler part of the day, and routine maintenance and repair work in hot areas should be scheduled for the cooler seasons of the year.

E. Worker Monitoring Programs

1. Every worker who works in extraordinary conditions that increase the risk of heat stress should be personally monitored. These conditions include wearing semipermeable or impermeable clothing when the temperature exceeds 21°C (69.8°F), working at extreme metabolic loads (greater than 500 kcal/hour), etc.
2. Personal monitoring can be done by checking the heart rate, recovery heart rate, oral temperature, or extent of body water loss.
3. To check the heart rate, count the radial pulse for 30 seconds at the beginning of the rest period. If the heart rate exceeds 110 beats per minute, shorten the next work period by one third and maintain the same rest period.
4. The recovery heart rate can be checked by comparing the pulse rate taken at 30 seconds (P_1) with the pulse rate taken at 2.5 minutes (P_3) after the rest break starts. The two pulse rates can be interpreted using Table III:4-4.

5. Oral temperature can be checked with a clinical thermometer after work but before the employee drinks water. If the oral temperature taken under the tongue exceeds 37.6°C, shorten the next work cycle by one third.
6. Body water loss can be measured by weighing the worker on a scale at the beginning and end of each work day. The worker's weight loss should not exceed 1.5% of total body weight in a work day. If a weight loss exceeding this amount is observed, fluid intake should increase.

F. Other Administrative Controls

The following administrative controls can be used to reduce heat stress:

- Reduce the physical demands of work, e.g., excessive lifting or digging with heavy objects;
- Provide recovery areas, e.g., air-conditioned enclosures and rooms;
- Use shifts, e.g., early morning, cool part of the day, or night work;
- Use intermittent rest periods with water breaks;
- Use relief workers;
- Use worker pacing; and
- Assign extra workers and limit worker occupancy, or the number of workers present, especially in confined or enclosed spaces.

TABLE III:4-4. HEART RATE RECOVERY CRITERIA

Heart rate recovery pattern	P_3	Difference between P_1 and P_3
Satisfactory recovery	<90	--
High recovery (Conditions may require further study)	90	10
No recovery (May indicate too much stress)	90	<10

VI. PERSONAL PROTECTIVE EQUIPMENT

A. Reflective Clothing

Which can vary from aprons and jackets to suits that completely enclose the worker from neck to feet, can stop the skin from absorbing radiant heat. However, since most reflective clothing does not allow air exchange through the garment, the reduction of radiant heat must more than offset the corresponding loss in evaporative cooling. For this reason, reflective clothing should be worn as loosely as possible. In situations where radiant heat is high, auxiliary cooling systems can be used under the reflective clothing.

B. Auxiliary Body Cooling

1. Commercially available **ice vests**, though heavy, may accommodate as many as 72 ice packets, which are usually filled with water. Carbon dioxide (dry ice) can also be used as a coolant. The cooling offered by ice packets lasts only 2 to 4 hours at moderate to heavy heat loads, and frequent replacement is necessary. However, ice vests do not encumber the worker and thus permit maximum mobility. Cooling with ice is also relatively inexpensive.
2. **Wetted clothing** is another simple and inexpensive personal cooling technique. It is effective when reflective or other impermeable protective clothing is worn. The clothing may be wetted terry cloth coveralls or wetted two-piece, whole-body cotton suits. This approach to auxiliary cooling can be quite effective under conditions of high temperature and low humidity, where evaporation from the wetted garment is not restricted.
3. **Water-cooled garments** range from a hood, which cools only the head, to vests and "long johns," which offer partial or complete body cooling. Use of this equipment requires a battery-driven circulating pump, liquid-ice coolant, and a container.

   Although this system has the advantage of allowing wearer mobility, the weight of the components limits the amount of ice that can be carried and thus reduces the effective use time. The heat transfer rate in liquid cooling systems may limit their use to low-activity jobs; even in such jobs, their service time is only about 20 minutes per pound of cooling ice. To keep outside heat from melting the ice, an outer insulating jacket should be an integral part of these systems.

4. **Circulating air** is the most highly effective, as well as the most complicated, personal cooling system. By directing compressed air around the body from a supplied air system, both evaporative and convective cooling are improved. The greatest advantage occurs when circulating air is used with impermeable garments or double cotton overalls.

   One type, used when respiratory protection is also necessary, forces exhaust air from a supplied-air hood ("bubble hood") around the neck and down inside an impermeable suit. The air then escapes through openings in the suit. Air can also be supplied directly to the suit without using a hood in three ways:

   - by a single inlet;
   - by a distribution tree; or
   - by a perforated vest.

   In addition, a vortex tube can be used to reduce the temperature of circulating air. The cooled air from this tube can be introduced either under the clothing or into a bubble hood. The use of a vortex tube separates the air stream into a hot and cold stream; these tubes also can be used to supply heat in cold climates. Circulating air, however, is noisy and requires a constant source of compressed air supplied through an attached air hose.

One problem with this system is the limited mobility of workers whose suits are attached to an air hose. Another is that of getting air to the work area itself. These systems should therefore be used in work areas where workers are not required to move around much or to climb. Another concern with these systems is that they can lead to dehydration. The cool, dry air feels comfortable and the worker may not realize that it is important to drink liquids frequently.

C. Respirator Usage

The weight of a self-contained breathing apparatus (SCBA) increases stress on a worker, and this stress contributes to overall heat stress. Chemical protective clothing such as totally encapsulating chemical protection suits will also add to the heat stress problem.

BIBLIOGRAPHY

American Conference of Governmental Industrial Hygienists (ACGIH). 1990. Documentation of the Threshold Limit Values and Biological Exposure Indices. 6th ed. Cincinnati: American Conference of Governmental Industrial Hygienists.

American Conference of Governmental Industrial Hygienists (ACGIH). 1992. 1992-1993 Threshold Limit Values for Chemical Substances and Physical Agents and Biological Exposure Indices. Cincinnati: American Conference of Governmental Industrial Hygienists.

American Industrial Hygiene Association (AIHA). 1975. Heating and Cooling for Man in Industry. 2nd ed. Akron, OH: American Industrial Hygiene Association.

Electric Power Research Institute (EPRI). 1987. Heat-Stress Management Program for Nuclear Power Plants. Palo Alto, CA: Electric Power Research Institute.

Eastman Kodak Company. 1983. Ergonomic Design for People at Work. Vol. II. Belmont, CA: Lifetime Learning Publications.

National Institute for Occupational Safety and Health. Criteria for a Recommended Standard--Occupational Exposure to Hot Environments. DHHS (NIOSH) Publication No. 86-113, April 1986.

National Institute for Occupational Safety and Health. Occupational Safety and Health Guidance Manual for Hazardous Waste Site Activities. DHHS (NIOSH) Publication No. 85-115, 1985.

National Institute for Occupational Safety and Health. Standards for Occupational Exposures to Hot Environments: Proceedings of a Symposium. DHHS (NIOSH) Publication No. 76-100, January 1976.

National Institute for Occupational Safety and Health. Working in Hot Environments. DHHS (NIOSH) Publication No. 86-112. Revised 1986.

National Safety Council. 1985. Pocket Guide to Heat Stress. Chicago, IL: National Safety Council.

Ramsey, J. D., Buford, C. L., Beshir, M.Y., and Jensen, R .C. Effects of Workplace Thermal Conditions on Safe Work Behavior. Journal of Safety Research 14:105-114, 1983.

Zenz, C. 1988. Occupational Medicine: Principles and Practical Applications. 2nd ed. St. Louis, MO: Mosby Year Book, Inc.

APPENDIX III: 4-1. HEAT STRESS: GENERAL WORKPLACE REVIEW

Note: Listed below are sample questions that the Compliance Officer may wish to consider when investigating heat stress in the workplace.

Workplace Description

A. Type of business
B. Heat-producing equipment or processes used
C. Previous history (if any) of heat-related problems
D. At "hot" spots:
   - Is the heat steady or intermittent?
   - Number of employees exposed?
   - For how many hours per day?
   - Is potable water available?
   - Are supervisors trained to detect/evaluate heat stress symptoms?

Are Exposures Typical For A Workplace In This Industry?

A. Weather at Time of Review
B. Temperature
C. Humidity
D. Air velocity
E. Is Day Typical of Recent Weather Conditions? (Get information from the Weather Bureau)
F. Heat-Reducing Engineering Controls
G. Ventilation in place?
H. Ventilation operating?
I. Air conditioning in place?
J. Air conditioning operating?
K. Fans in place?
L. Fans operating?
M. Shields or insulation between sources and employees?

N. Are reflective faces of shields clean?

Work Practices To Detect, Evaluate, And Prevent Or Reduce Heat Stress

A. Training program?
B. Content?
C. Where given?
D. For whom?
E. Liquid replacement program?
F. Acclimatization program?
G. Work/rest schedule?
H. Scheduling of work (during cooler parts of shift, cleaning and maintenance during shut-downs, etc.)
I. Cool rest areas (including shelter at outdoor work sites)?
J. Heat monitoring program?
K. Personal Protective Equipment
L. Reflective clothing in use?
M. Ice and/or water-cooled garments in use?
N. Wetted undergarments (used with reflective or impermeable clothing) in use?
O. Circulating air systems in use?
P. First Aid Program
Q. Trained personnel?
R. Provision for rapid cool-down?
S. Procedures for getting medical attention?
T. Transportation to medical facilities readily available for heat stroke victims?
U. Medical Screening and Surveillance Program
V. Content?
W. Who manages program?
X. Additional Comments: (Use additional pages as needed.)

APPENDIX III: 4-2. HEAT STRESS-RELATED ILLNESS OR ACCIDENT FOLLOW-UP

A. Describe events leading up to the episode.
B. Evaluation/comments by other workers at the scene.
C. Work at time of episode (heavy, medium, light)?
D. How long was affected employee working at site prior to episode?
E. Medical history of affected worker, if known.
F. Appropriate engineering controls in place?
G. Appropriate engineering controls in operation?
H. Appropriate work practices used by affected employee(s)?
I. Appropriate personal protective equipment available?
J. Appropriate personal protective equipment in use?
K. Medical screening for heat stress and continued surveillance for signs of heat stress given other employees?
L. Additional comments regarding specific episode(s): (Use additional pages as needed.)

APPENDIX III: 4-3. MEASUREMENT OF WET BULB GLOBE TEMPERATURE

Measurement is often required of those environmental factors that most nearly correlate with deep body temperature and other physiological responses to heat. At the present time, the Wet Bulb Globe Temperature Index (WBGT) is the most used technique to measure these environmental factors. WBGT values are calculated by the following equations:

Equation III:4-4. Indoor or Outdoor Wet Bulb Globe Temperature Indexes (WBGI)

Indoor or outdoors with no solar load

$$WBGT = 0.7NWB + 0.3GT$$

Outdoors with solar load

$$WBGT = 0.7NWB + 0.2GT + 0.1DB$$

where: WBGT = Wet Bulb Globe Temperature Index

NWB = Natural Wet-Bulb Temperature

DB = Dry-Bulb (air) Temperature

GT = Globe Thermometer Temperature

The determination of WBGT requires the use of a black globe thermometer, a natural (static) wet-bulb thermometer, and a dry-bulb thermometer. The measurement of environmental factors shall be performed as follows:

1. The range of the dry and the natural wet-bulb thermometers should be -5°C to +50°C, with an accuracy of ±0.5°C. The dry bulb thermometer must be shielded from the sun and the other radiant surfaces of the environment without restricting the airflow around the bulb. The wick of the natural wet bulb thermometer should be kept wet with distilled water for at least one-half hour before the temperature reading is made. It is not enough to immerse the other end of the wick into a reservoir of distilled water and wait until the whole wick becomes wet by capillarity. The wick must be wetted by direct application of water from a syringe one-half hour before each reading. The wick must cover the bulb of the thermometer and an equal length of additional wick must cover the stem above the bulb. The wick should always be clean, and new wicks should be washed before using.
2. A globe thermometer, consisting of a 15 cm (6-inch) in diameter hollow copper sphere painted on the outside with a matte black finish, or equivalent, must be used. The bulb or sensor of a thermometer (range -5°C to +100°C with an accuracy of ±0.5°C) must be fixed in the center of the sphere. The globe thermometer should be exposed at least 25 minutes before it is read.
3. A stand should be used to suspend the three thermometers so that they do not restrict free air flow around the bulbs and the wet-bulb and globe thermometer are not shaded.
4. It is permissible to use any other type of temperature sensor that gives a reading similar to that of a mercury thermometer under the same conditions.
5. The thermometers must be placed so that the readings are representative of the employee's work or rest areas, as appropriate.

Once the WBGT has been estimated, employers can estimate workers' metabolic heat load (see Tables III:4-1 and III:4-2) and use the ACGIH method to determine the appropriate work/rest regimen, clothing, and equipment to use to control the heat exposures of workers in their facilities.

APPENDIX C

Cold Stress

Outdoor Action Guide to Hypothermia And Cold Weather Injuries

by Rick Curtis

Traveling in cold weather conditions can be life threatening. The information provided here is designed for educational use only and is not a substitute for specific training or experience. Princeton University and the author assume no liability for any individual's use of or reliance upon any material contained or referenced herein. Medical research on hypothermia and cold injuries is always changing knowledge and treatment. When going into cold conditions it is your responsibility to learn the latest information. The material contained in this workshop may not be the most current. Copyright © 1995 Rick Curtis, Outdoor Action Program, Princeton University.

How We Lose Heat to the Environment

1. **Radiation** - loss of heat to the environment due to the temperature gradient (this occurs only as long as the ambient temperature is below 98.6). Factors important in radiant heat loss are the surface area and the temperature gradient.

2. **Conduction** - through direct contact between objects, molecular transference of heat energy

    - Water conducts heat away from the body 25 times faster than air because it has a greater density (therefore a greater heat capacity). **Stay dry = stay alive!**

    - Steel conducts heat away faster than water

    Example: Generally conductive heat loss accounts for only about 2% of overall loss. However, with wet clothes the loss is increased 5x.

3. **Convection** - is a process of conduction where one of the objects is in motion. Molecules against the surface are heated, move away, and are replaced by new molecules which are also heated. The rate of convective heat loss depends on the density of the moving substance (water convection occurs more quickly than air convection) and the velocity of the moving substance.

    - Wind Chill - example of the effect of air convection; wind chill tables give a reading of the amount of heat lost to the environment relative to a still air temperature.

4. **Evaporation** - heat loss from converting water from a liquid to a gas

- Perspiration - evaporation of water to remove excess heat
    - Sweating - body response to remove excess heat
    - Respiration - air is heated as it enters the lungs and is exhaled with an extremely high moisture content
    - It is important to recognize the strong connection between fluid levels, fluid loss, and heat loss. As body moisture is lost through the various evaporative processes the overall circulating volume is reduced which can lead to dehydration. This decrease in fluid level makes the body more susceptible to hypothermia and other cold injuries.

Response to Cold

Cold Challenge - (negative factors)

- Temperature
- Wet (rain, sweat, water)
- Wind (blowing, moving, e.g. biking)
  Total = Cold Challenge

Heat Retention - (positive factors)

- Size/shape (Eskimo vs. Masai)
- Insulation (layering/type)
- Fat (as insulation)
- Shell/core (shunt blood to core) shell acts as a thermal barrier
  Total = Heat Retention

Heat Production - (positive factors)

- Exercise, shivering Limited by:
    - Fitness
    - Fuel stores (glycogen)
    - Fluid status (efficient exercise)
    - Food intake (kindling, sticks, logs)

  Total = Heat Production

Heat Retention	+	Heat Production	less than	Cold Challenge	=	Hypothermia
Insulation **Body Fat** **Surface to Volume ratio** **Shell to Core shunting**		Exercise Shivering		Temperature Wetness Wind		

Your Body Core Temperature

1. Heat is both required and produced at the cellular level. The environment acts as either a heating or a cooling force on the body. The body must be able to generate heat, retain heat, and discharge heat depending on the body activity and ambient external temperature.

2. Body temperature is a measure of the metabolism - the general level of chemical activity within the body.

3. The hypothalamus is the major center of the brain for regulating body temperature. It is sensitive to blood temperature changes of as little as 0.5 degrees Celsius and also reacts to nerve impulses received from nerve endings in the skin.

4. The optimum temperature for chemical reactions to take place in the body is 98.6 degrees F. Above 105 F many body enzymes become denatured and chemical reactions cannot take place leading to death. Below 98.6 F chemical reactions slow down with various complications which can lead to death.

5. **Core** = the internal body organs, particularly the heart, lungs, and brain.

Periphery = the appendages, skin, and muscle tissue.

6. Core temperature is the temperature that is essential to the overall metabolic rate of the body. The temperature of the periphery is not critical.

How Your Body Regulates Core Temperature

1. Vasodilation - increases surface blood flow, increases heat loss (when ambient temperature is less that body temperature). Maximal vasodilation can increase cutaneous blood flow to 3000 ml/minute (average flow is 300-500 ml/minute).

2. Vasoconstriction - decreases blood flow to periphery, decreases heat loss. Maximal vasoconstriction can decrease cutaneous blood flow to 30 ml/minute.

3. Sweating - cools body through evaporative cooling

4. Shivering - generates heat through increase in chemical reactions required for muscle activity. Visible shivering can maximally increase surface heat production by 500%. However, this is limited to a few hours because of depletion of muscle glucose and the onset of fatigue.

5. Increasing/Decreasing Activity will cause corresponding increases in heat production and decreases in heat production.

6. Behavioral Responses - putting on or taking off layers of clothing will result in heat regulation

Hypothermia

1. Hypothermia - "a decrease in the core body temperature to a level at which normal muscular and cerebral functions are impaired." - Medicine for Mountaineering

2. Conditions Leading to Hypothermia

- Cold temperatures
- Improper clothing and equipment
- Wetness
- Fatigue, exhaustion
- Dehydration
- Poor food intake
- No knowledge of hypothermia
- Alcohol intake - causes vasodilation leading to increased heat loss

3. What are "hypothermia" temperatures

- Below freezing
- 40 degrees - Ex. Shenandoahs, wind and rain
- 60 degrees - Ex. Rayanna and hurricane
- Any temperature less than 98.6 degrees can be linked to hypothermia (ex. hypothermia in the elderly in cold houses) or peripheral circulation problems such as trench foot and frostbite.

4. Signs and Symptoms of Hypothermia

a. **Watch for the "-Umbles"** - stumbles, mumbles, fumbles, and grumbles which show changes in motor coordination and levels of consciousness

b. **Mild Hypothermia** - core temperature 98.6 - 96 degrees F

- Shivering - not under voluntary control
- Can't do complex motor functions (ice climbing or skiing) can still walk & talk
- Vasoconstriction to periphery

c. **Moderate Hypothermia** - core temperature 95 - 93 degrees F

- Dazed consciousness
- Loss of fine motor coordination - particularly in hands - can't zip up parka, due to restricted peripheral blood flow
- Slurred speech
- Violent shivering
- Irrational behavior - Paradoxical Undressing - person starts to take off clothing, unaware s/he is cold
- "I don't care attitude" - flattened affect

d. **Severe Hypothermia** - core temperature 92 - 86 degrees and below *(immediately life threatening)*

- Shivering occurs in waves, violent then pause, pauses get longer until shivering finally ceases - because the heat output from burning glycogen in the muscles is not sufficient to counteract the continually

dropping core temperature, the body shuts down on shivering to conserve glucose

- Person falls to the ground, can't walk, curls up into a fetal position to conserve heat
- Muscle rigidity develops - because peripheral blood flow is reduced and due to lactic acid and CO2 buildup in the muscles
- Skin is pale
- Pupils dilate
- Pulse rate decreases
- at 90 degrees the body tries to move into hibernation, shutting down all peripheral blood flow and reducing breathing rate and heart rate.
- at 86 degrees the body is in a state of "metabolic icebox." The person looks dead but is still alive.

e. **Death from Hypothermia**

- Breathing becomes erratic and very shallow
- Semi-conscious
- Cardiac arrythmias develop, any sudden shock may set off Ventricular Fibrillation
- Heart stops, death

5. How to Assess if someone is Hypothermic

If shivering can be stopped voluntarily = mild hypothermia

- Ask the person a question that requires higher reasoning in the brain (count backwards from 100 by 9's). If the person is hypothermic, they won't be able to do it. [Note: there are also other conditions such as altitude sickness that can also cause the same condition.]
- If shivering cannot be stopped voluntarily = moderate - severe hypothermia
- If you can't get a radial pulse at the wrist it indicates a core temp below 90 - 86 degrees
- The person may be curled up in a fetal position. Try to open their arm up from the fetal position, if it curls back up, the person is alive. Dead muscles won't contract only live muscles.

Stage	Core Temperature	Signs & Symptoms
Mild Hypothermia	99º - 97ºF	Normal, shivering can begin
	97º - 95ºF	Cold sensation, goose bumps, unable to perform complex tasks with hands, shiver can be mild to severe, hands numb
Moderate Hypothermia	95º - 93ºF	Shivering, intense, muscle incoordination becomes apparent, movements slow and labored, stumbling pace, mild confusion, may appear alert. Use sobriety test, if unable to walk a 30 foot straight line, the person is hypothermic.
	93º - 90ºF	Violent shivering persists, difficulty speaking, sluggish thinking, amnesia starts to appear, gross muscle movements sluggish, unable to use hands, stumbles frequently, difficulty speaking, signs of depression, withdrawn.
Severe Hypothermia	90º - 86ºF	Shivering stops, exposed skin blue of puffy, muscle coordination very poor, inability to walk, confusion, incoherent/irrational behavior, but may be able to maintain posture and appearance of awareness
	86º - 82ºF	Muscle rigidity, semiconscious, stupor, loss of awareness of others, pulse and respiration rate decrease, possible heart fibrillation
	82º - 78ºF	Unconscious, heart beat and respiration erractic, pulse may not be palpable
	78º - 75ºF	Pulmonary edema, cardiac and respiratory failure,death. Death may occur before this temperature is reached.

Treating Hypothermia

The basic principles of rewarming a hypothermic victim are to conserve the heat they have and replace the body fuel they are burning up to generate that heat. If a person is shivering, they have the ability to rewarm themselves at a rate of 2 degrees C per hour.

Mild - Moderate Hypothermia

1. Reduce Heat Loss

- Additional layers of clothing
- Dry clothing

- Increased physical activity
- Shelter

2. Add Fuel & Fluids

It is essential to keep a hypothermic person adequately hydrated and fueled.

a. Food types

- Carbohydrates - 5 calories/gram - quickly released into blood stream for sudden brief heat surge - these are the best to use for quick energy intake especially for mild cases of hypothermia
- Proteins - 5 calories/gram - slowly released - heat given off over a longer period
- Fats - 9 calories/gram - slowly released but are good because they release heat over a long period, however, it takes more energy to break fats down into glucose - also takes more water to break down fats leading to increased fluid loss

b. Food intake

- Hot liquids - calories plus heat source
- Sugars (kindling)
- GORP - has both carbohydrates (sticks) and protiens/fats (logs)

c. Things to avoid

- Alcohol - a vasodilator - increases peripheral heat loss
- Caffeine - a diuretic - causes water loss increasing dehydration
- Tobacco/nicotine - a vasoconstrictor, increases risk of frostbite

3. Add Heat

- Fire or other external heat source
- Body to body contact. Get into a sleeping back, in dry clothing with a normothermic person in lightweight dry clothing

Severe Hypothermia

1. Reduce Heat Loss

- **Hypothermia Wrap**: The idea is to provide a shell of total insulation for the patient. No matter how cold, patients can still internally rewarm themselves much more efficiently than any external rewarming. Make sure the patient is **dry**, and has a polypropylene layer to minimize sweating on the skin. The person must be protected from any moisture in the environment. Use multiple sleeping bags, wool blankets, wool clothing, Ensolite pads to create a minimum of 4" of insulation all the way around the patient, especially between the patient and the ground. Include an aluminum "space" blanket to help prevent radiant heat loss, and wrap the entire ensemble in plastic to protect from wind and water. If someone is truly hypothermic, don't put him/her naked in a sleeping bag with another person.

2. Add Fuel & Fluids

- **Warm Sugar Water** - for people in severe hypothermia, the stomach has shut down and will not digest solid food but can absorb water and sugars. Give a dilute mixture of warm water with sugar every 15 minutes. Dilute Jello™ works best since it is part sugar and part protien. This will be absorbed directly into

the blood stream providing the necessarry calories to allow the person to rewarm themselves. One box of Jello = 500 Kilocalories of heat energy. ***Do not*** give full strength Jello even in liquid form, it is too concentrated and will not be absorbed.

- **Urination** - people will have to urinate from cold diuresis. Vasoconstriction creates greater volume pressure in the blood stream. The kidneys pull off excess fluid to reduce the pressure. A full bladder is a place for additional heat loss so urinating will help conserve heat. You will need to help the person urinate. Open up the Hypothermia Wrap enough to do this and then cover them back up. You will need to keep them hydrated with the dilute Jello solution described above.

3. Add Heat

Heat can be applied to transfer heat to major arteries - at the neck for the carotid, at the armpits for the brachial, at the groin for the femoral, at the palms of the hands for the arterial arch.

- Chemical heat packs such as the Heat Wave™ provides 110 degrees F for 6-10 hours.
- Hot water bottles, warm rocks, towels, compresses
- For a severely hypothermic person, rescue breathing can increase oxygen and provide internal heat.

Afterdrop

Is a situation in which the core temperature actually decreases during rewarming. This is caused by peripheral vessels in the arms and legs dilating if they are rewarmed. This dilation sends this very cold, stagnate blood from the periphery to the core further decreasing core temperature which can lead to death. In addition, this blood also is very acetic which may lead to cardiac arrythmias and death. ***Afterdrop can best be avoided by not rewarming the periphery. Rewarm the core only!*** **Do not expose a severely hypothermic victim to extremes of heat.**

CPR & Hypothermia

When a person is in severe hypothermia they may demonstrate all the accepted clinical signs of death:

- Cold
- Blue skin
- Fixed and dilated pupils
- No discernable pulse
- No discernable breathing
- Comatose & unresponsive to any stimuli
- Rigid muscles

But they still may be alive in a "metabolic icebox" and can be revived. You job as a rescuer is to rewarm the person and do CPR if indicated. **A hypothermia victim is never cold and dead only warm and dead.** During severe hypothermia the heart is hyperexcitable and mechanical stimulation (such as CPR, moving them or Afterdrop) may result in fibrillation leading to death. As a result CPR may be contraindicated for some hypothermia situations:

1. ***Make sure you do a complete assessment of heart rate before beginning CPR.*** Remember, the heart rate may be 2-3/minute and the breathing rate 1/30 seconds. Instituting cardiac compressions at this point

may lead to life-threatening arrythmias. Check the carotid pulse for a longer time period (up to a minute) to ascertain if there is some slow heartbeat. Also, even though the heart is beating very slowly, it is filling completely and distributing blood fairly effectively. External cardiac compressions only are 20-30% effective. Thus, with its severely decreased demands, the body may be able to satisfy its circulatory needs with only 2-3 beats per minute. ***Be sure the pulse is absent before beginning CPR. You will need to continue to do CPR as you rewarm the person.***

2. Ventilation may have stopped but respiration may continue - the oxygen demands for the body have been so diminished with hypothermia that the body may be able to survive for some time using only the oxygen that is already in the body. If ventilation has stopped, artificial ventilation may be started to increase available oxygen. In addition, blowing warm air into the persons lungs may assist in internal rewarming.

3. CPR Procedures

- Check radial pulse, between 91.4 and 86 degrees F this pulse disappears
- Check for carotid pulse - wait at least a full minute to check for very slow heartbeat
- If pulse but not breathing or slow breathing, give rescue breathing (also adds heat).
- If no discernible heartbeat begin CPR and be prepared to continue - persons with hypothermia have been given CPR for up to 3.5 hours and have recovered with *no* neurological damage
- Begin active rewarming

Cold Injuries

Tissue temperature in cold weather is regulated by two factors, the external temperature and the internal heat flow. All cold injuries described below are intimately connected with the degree of peripheral circulation. As peripheral circulation is reduced to prevent heat loss to the core these conditions are more likely to occur.

1. Factors influencing cold injuries

- Low ambient temperature
- Wind chill - increases rate of freezing dramatically
- Moisture - wet skin freezes at a higher temp than dry
- Insulation
- Contact with metal or supercooled liquids (white gas)
- Exposed skin
- Vasodilation
- Vasoconstriction
- Previous cold injuries
- Constricting garments
- Local pressure
- Cramped position
- Body type
- Dehydration
- Women do better in cold than men (greater subcutaneous body fat)
- Caloric intake
- Diabetes, some medications

- Alcohol
- Caffeine, nicotine

2. Cold-induced Vasodilation - When a hand or foot is cooled to 59 degrees F, maximal vasoconstriction and minimal blood flow occur. If cooling continues to 50 degrees, vasoconstriction is interrupted by periods of vasodilation with an increase in blood and heat flow. This "hunting" response recurs in 5-10 minute cycles to provide some protection from cold. Prolonged, repeated exposure increases this response and offers some degree of acclimatization. Ex. Eskimos have a strong response with short intervals in between.

3. Pathophysiology of Tissue Freezing - As tissue begins to freeze, ice crystals are formed within the cells. As intracellular fluids freeze, extracellular fluid enters the cell and there is an increase in the levels of extracellular salts due to the water transfer. Cells may rupture due to the increased water and/or from tearing by the ice crystals. ***Do not rub tissue; it causes cell tearing from the ice crystals.*** As the ice melts there is an influx of salts into the tissue further damaging the cell membranes. Cell destruction results in tissue death and loss of tissue. Tissue can't freeze if the temperature is above 32 degrees F. It has to be below 28 degrees F because of the salt content in body fluids. Distal areas of the body and areas with a high surface to volume ratio are the most susceptible (e.g ears, nose, fingers and toes - this little rhyme should help remind you what to watch out for in yourself and others).

- Surface frostbite generally involves destruction of skin layers resulting in blistering and minor tissue loss. Blisters are formed from the cellular fluid released when cells rupture.
- Deep frostbite can involve muscle and bone

	Cold Response	Mild Frostnip	Superficial Frostbite	Deep Frostbite
Sensation	Painful	May have sensation	Numb	Numb
Feels	Normal	Normal	Soft	Hard
Color	Red	White	White	White

4. Cold Response

- Circulation is reduce to the are to prevent heat loss.
- The area may be pale, cold.
- It may have sensation or be numb.

5. Frostnip

- Freezing of top layers of skin tissue
- It is generally reversible
- White, waxy skin, top layer feels hard, rubbery but deeper tissue is still soft

- Numbness
- Most typically seen on cheeks, earlobes, fingers, and toes

Treatment

- Rewarm the area gently, generally by blowing warm air on it or placing the area against a warm body part (partner's stomach or armpit)
- ***Do not rub the area*** - this can damage the effected tissue by having ice crystals tear the cell

6. Frostbite

- Skin is white and "wooden" feel all the way through
- Superficial frostbite includes all layers of skin
- Numbness, possible anesthesia
- Deep frostbite can include freezing of muscle and/or bone, it is very difficult to rewarm the appendage without some damage occurring

Treatment

- Superficial frostbite may be rewarmed as frostnip if only a small area is involved
- If deep frostbite, see below for rewarming technique

7. Rewarming of Frostbite

- Rewarming is accomplished by immersion of the effected part into a water bath of 105 - 110 degrees F. ***No hotter or additional damage will result.*** This is the temperature which is warm to your skin. Monitor the temperature carefully with a thermometer. Remove constricting clothing. Place the appendage in the water and continue to monitor the water temperature. This temperature will drop so that additional warm water will need to be added to maintain the 105 - 110 degrees. ***Do not*** add this warm water directly to the injury. The water will need to be circulated fairly constantly to maintain even temperature. The effected appendage should be immersed for 25 - 40 minutes. Thawing is complete when the part is pliable and color and sensation has returned. Once the area is rewarmed, there can be significant pain. Discontinue the warm water bath when thawing is complete.
- ***Do not use dry heat to rewarm. It cannot be effectively maintained at 105 - 110 degrees and can cause burns further damaging the tissues.***
- Once rewarming is complete the injured area should be wrapped in sterile gauze and protected from movement and further cold.
- ***Once a body part has been rewarmed it cannot be used for anything. Also it is essential that the part can be kept from refreezing.*** Refreezing after rewarming causes extensive tissue damage and may result in loss of tissue. If you cannot ***guarantee*** that the tissue will stay warm, ***do not rewarm it.*** Mountaineers have walked out on frozen feet to have them rewarmed after getting out with no tissue loss. Once the tissue is frozen the major harm has been done. Keeping it frozen will not cause significant additional damage.

8. Special Considerations for Frostbite

- If the person is hypothermic and frostbitten, the first concern is core rewarming. Do not rewarm the frostbitten areas until the core temp approaches 96 degrees.
- No alcohol - vasodilation may increase fluid buildup
- No smoking - nicotine as a vasoconstrictor may increase chances for developing frostbite
- Liquids such as white gas can "supercool" in the winter (drop below their freezing point but not freeze). White gas also evaporates quickly into the air. Spilling supercooled white gas on exposed skin leads to instant frostbite from evaporative cooling. Always were gloves when handling fuel.
- Touching metal with bare skin can cause the moisture on your skin to freeze to the metal. (In really cold conditions, metal glasses frames can be a problem). When you pull away, you may leave a layer of skin behind. Don't touch metal with bare skin.

9. Trench Foot - Immersion Foot

Trench foot is a process similar to chillblains. It is caused by prolonged exposure of the feet to cool, wet conditions. This can occur at temperatures as high as 60 degrees F if the feet are constantly wet. This can happen with wet feet in winter conditions or wet feet in much warmed conditions (ex. sea kayaking). The mechanism of injury is as follows: wet feet lose heat 25x faster than dry, therefore the body uses vasoconstriction to shut down peripheral circulation in the foot to prevent heat loss. Skin tissue begins to die because of lack of oxygen and nutrients and due to buildup of toxic products. The skin is initially reddened with numbness, tingling pain, and itching then becomes pale and mottled and finally dark purple, grey or blue. The effected tissue generally dies and sluffs off. In severe cases trench foot can involve the toes, heels, or the entire foot. If circulation is impaired for > 6 hours there will be permanent damage to tissue. If circulation is impaired for > 24 hours the victim may lose the entire foot. Trench Foot cuases permanent damage to the circulatory system making the person more prone to cold related injuries in that area. A similar phenomenon can occur when hands are kept wet for long periods of time such as kayaking with wet gloves or pogies. The damage to the circulatory system is known as Reynaud's Phenomenon.

Treatment and Prevention of Trench foot

- Includes careful washing and drying of the feet, gentle rewarming and slight elevation. Since the tissue is not frozen as in severe frostbite it is ***more*** susceptible to damage by walking on it. Cases of trench foot should not walk out; they should be evacuated by litter. Pain and itching are common complaints. Give Ibuprofen or other pain medication.
- Prevention is the best approach to dealing with trench foot. Keep feet dry by wearing appropriate footwear. Check your feet regularly to see if they are wet. If your feet get wet (through sweating or immersion), stop and dry your feet and put on dry socks. Periodic air drying, elevation, and massage will also help. Change socks at least once a day and do not sleep with wet socks. Be careful of tight socks which can further impair peripheral circulation. Foot powder

with aluminum hydroxide can help. High altitude mountaineers will put antiperspirant on their feet for a week bfore the trip. The active ingredient, aluminum hydroxide will keep your feet from sweating for up to a month and their are no confirmed contraindications for wearing antiperspirant. [Some studies have shown links between alumnium in the body and Alzheimers.] Vapor barrier socks may increase the possibility of trenchfoot. When you are active and you are wearing a vapor barrier sock, you must carefully monitor how you sweat. If you are someone who sweats a lot with activity, your foot and polypropylene liner sock may be totally soaked before the body shuts down sweating. Having this liquid water next to the skin is going to lead to increased heat loss. If you don't sweat much, your body may shut down perspiration at the foot before it gets actually wet. This is when the vapor barrier system is working. You must experiment to determine if vapor barrier systems will work for you.

10. Chillblains

- Caused by repeated exposure of bare skin to temperatures below 60 degrees
- Redness and itching of the effected area
- Particularly found on cheeks and ears, fingers and toes
- Women and young children are the most susceptible
- The cold exposure causes damage to the peripheral capillary beds, this damage is permanent and the redness and itching will return with exposure

11. Avoiding Frostbite and Cold related Injuries

- "Buddy system" - keep a regular watch on each other's faces, cheeks, ears for signs of frostnip/frostbite
- Keep a regular "self check" for cold areas, wet feet, numbness or anesthesia
- ***If at any time you discover a cold injury, stop and rewarm the area (unless doing so places you at greater risk).***

12. Eye Injuries

a. Freezing of Cornea

- Caused by forcing the eyes open during strong winds without goggles
- Treatment is very controlled, rapid rewarming e.g. placing a warm hand or compress over the closed eye. After rewarming the eyes must be completely covered with patches for 24 - 48 hours.

b. Eyelashes freezing together

- Put hand over eye until ice melts, then can open the eye

c. Snowblindness

- Sunburn of the eyes
- Prevention by wearing good sunglasses with side shields or goggles. Eye protection from sun is just as necessary on cloudy or overcast days as it is in full sunlight when you are on snow. Snow blindness can even occur during a snow storm if the cloud cover is thin.

Symptoms

- Occur 8-12 hours after exposure
- Eyes feel dry and irritated, then feel as if they are full of sand, moving or blinking becomes extremely painful, exposure to light hurts the eyes, eyelids may swell, eye redness, and excessive tearing

Treatment

- Cold compresses and dark environment
- Do not rub eyes

BIBLIOGRAPHY

- *Hypothermia: Causes, Effects, and Prevention*, Robert Pozos, David Born, New Century, 1982.
- *Management of Wilderness and Environmental Emergencies*, Paul Auerbach, Edward Geehr, Macmillan, 1983.
- *Medicine for Mountaineering*, James Wilkerson, The Mountaineers, 1992.
- *Hypothermia - Death by Exposure*, William Forgey, ICS, 1985.
- *Hypothermia, Frostbite, and other Cold Injuries*, James Wilkerson, Cameron Bangs, John Hayward, The Mountaineers, 1986
- *Medicine for the Backcountry*, Buck Tilton and Frank Hubbell, ICS Books, 1994.

This article is written by Rick Curtis, Director, Outdoor Action Program. This material may be freely distributed for nonprofit educational use. However, if included in publications, written or electronic, attributions must be made to the author. Commercial use of this material is prohibited without express written permission from the author. Copyright © 1995 Rick Curtis, Outdoor Action Program, Princeton University.

This page is maintained by Rick Curtis Director, Outdoor Action Program. Rcurtis@.princeton.edu

APPENDIX D

OSHA Poster

U.S. Department of Labor

OSHA®
Occupational Safety and Health Administration

Job Safety and Health
IT'S THE LAW!

All workers have the right to:

- A safe workplace.
- Raise a safety or health concern with your employer or OSHA, or report a work-related injury or illness, without being retaliated against.
- Receive information and training on job hazards, including all hazardous substances in your workplace.
- Request an OSHA inspection of your workplace if you believe there are unsafe or unhealthy conditions. OSHA will keep your name confidential. You have the right to have a representative contact OSHA on your behalf.
- Participate (or have your representative participate) in an OSHA inspection and speak in private to the inspector.
- File a complaint with OSHA within 30 days (by phone, online or by mail) if you have been retaliated against for using your rights.
- See any OSHA citations issued to your employer.
- Request copies of your medical records, tests that measure hazards in the workplace, and the workplace injury and illness log.

This poster is available free from OSHA.

Employers must:

- Provide employees a workplace free from recognized hazards. It is illegal to retaliate against an employee for using any of their rights under the law, including raising a health and safety concern with you or with OSHA, or reporting a work-related injury or illness.
- Comply with all applicable OSHA standards.
- Report to OSHA all work-related fatalities within 8 hours, and all inpatient hospitalizations, amputations and losses of an eye within 24 hours.
- Provide required training to all workers in a language and vocabulary they can understand.
- Prominently display this poster in the workplace.
- Post OSHA citations at or near the place of the alleged violations.

FREE ASSISTANCE to identify and correct hazards is available to small and medium-sized employers, without citation or penalty, through OSHA-supported consultation programs in every state.

Contact OSHA. We can help.

1-800-321-OSHA (6742) • TTY 1-877-889-5627 • www.osha.gov

OSHA 3165-04R 2015

APPENDIX E

HASP Field Change Request Form

HEALTH & SAFETY PLAN
CHANGE NOTICE

Pages _____ of _____

Project: H&S-CN

1) HASP VERSION: _____ SECTION: _____ PAGE (s): _____

RE: --- Change to existing HASP Anticipated Revision Date: _____
--- Addition to existing HASP
--- Other: _____
_____CONT._____

2) PROPOSED CHANGE: _____
_____
_____
_____

3) REASON FOR PROPOSED CHANGE(s):
--- Required by SPEC or Change Order --- Other: _____
--- Disposition of Deficiency _____CONT._____
--- Change in Regulatory or Other Requirements
--- Operational Experience

4) EXHIBITS ATTACHED ____ NO ____ YES (If YES, describe) _____
_____CONT._____

5) PMK APPROVALS PROJECT MANAGER: _____ Date: _____
SITE MANAGER: _____ Date: _____
H&S MANAGER: _____ Date: _____

Client Approval Required: ____ NO ____ YES (If YES, date submitted) _____

6) CLIENT APPROVAL _____ APPROVED _____ REMANDED _____ REJECTED

Comments: _____
_____
_____ CONT._____

Client Representative: _____Date: _____

7) DISTRIBUTION AFTER APPROVAL

X HASP UPDATE LIST --- OTHER: _____
X CLIENT _____
X PROJECT FILES _____

8) PREPARED BY: _____Date: _____
Title: _____

APPENDIX F

Signatory Pages

Signatory Page

This site-specific Health and Safety Plan (HASP) must be read and signed by all SESI personnel at the Site.

I have reviewed this site-specific HASP. I agree to abide by the requirements of this HASP.

Signature	Date
Signature	Date
Signature	Date
Signature	Date
Signature	Date
Signature	Date
Signature	Date
Signature	Date
Signature	Date
Signature	Date

Signatory Page

This site-specific Health and Safety Plan (HASP) must be read and signed by all SESI personnel at the Site.

I have reviewed this site-specific HASP. I agree to abide by the requirements of this HASP.

Signature	Date
Signature	Date
Signature	Date
Signature	Date
Signature	Date
Signature	Date
Signature	Date
Signature	Date
Signature	Date
Signature	Date
Signature	Date
Signature	Date

APPENDIX G

Material Safety Data Sheets

List of Material Safety Data Sheets Provided

1) Arsenic 7440-38-2

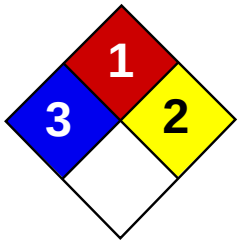

Health	3
Fire	1
Reactivity	2
Personal Protection	E

Material Safety Data Sheet
Arsenic MSDS

Section 1: Chemical Product and Company Identification

Product Name: Arsenic

Catalog Codes: SLA1006

CAS#: 7440-38-2

RTECS: CG0525000

TSCA: TSCA 8(b) inventory: Arsenic

CI#: Not applicable.

Synonym:

Chemical Name: Arsenic

Chemical Formula: As

Contact Information:

Sciencelab.com, Inc.
14025 Smith Rd.
Houston, Texas 77396

US Sales: **1-800-901-7247**
International Sales: **1-281-441-4400**

Order Online: ScienceLab.com

CHEMTREC (24HR Emergency Telephone), call:
1-800-424-9300

International CHEMTREC, call: 1-703-527-3887

For non-emergency assistance, call: 1-281-441-4400

Section 2: Composition and Information on Ingredients

Composition:

Name	CAS #	% by Weight
Arsenic	7440-38-2	100

Toxicological Data on Ingredients: Arsenic: ORAL (LD50): Acute: 763 mg/kg [Rat]. 145 mg/kg [Mouse].

Section 3: Hazards Identification

Potential Acute Health Effects:
Very hazardous in case of ingestion, of inhalation. Slightly hazardous in case of skin contact (irritant), of eye contact (irritant).

Potential Chronic Health Effects:
CARCINOGENIC EFFECTS: Classified A1 (Confirmed for human.) by ACGIH. MUTAGENIC EFFECTS: Not available. TERATOGENIC EFFECTS: Not available. DEVELOPMENTAL TOXICITY: Not available. The substance is toxic to kidneys, lungs, the nervous system, mucous membranes. Repeated or prolonged exposure to the substance can produce target organs damage.

Section 4: First Aid Measures

Eye Contact:
Check for and remove any contact lenses. In case of contact, immediately flush eyes with plenty of water for at least 15 minutes. Get medical attention if irritation occurs.

Skin Contact: Wash with soap and water. Cover the irritated skin with an emollient. Get medical attention if irritation develops.

Serious Skin Contact: Not available.

Inhalation:
If inhaled, remove to fresh air. If not breathing, give artificial respiration. If breathing is difficult, give oxygen. Get medical attention.

Serious Inhalation:
Evacuate the victim to a safe area as soon as possible. Loosen tight clothing such as a collar, tie, belt or waistband. If breathing is difficult, administer oxygen. If the victim is not breathing, perform mouth-to-mouth resuscitation. Seek medical attention.

Ingestion:
Do NOT induce vomiting unless directed to do so by medical personnel. Never give anything by mouth to an unconscious person. If large quantities of this material are swallowed, call a physician immediately. Loosen tight clothing such as a collar, tie, belt or waistband.

Serious Ingestion: Not available.

Section 5: Fire and Explosion Data

Flammability of the Product: May be combustible at high temperature.

Auto-Ignition Temperature: Not available.

Flash Points: Not available.

Flammable Limits: Not available.

Products of Combustion: Some metallic oxides.

Fire Hazards in Presence of Various Substances: Flammable in presence of open flames and sparks, of heat, of oxidizing materials.

Explosion Hazards in Presence of Various Substances:
Risks of explosion of the product in presence of mechanical impact: Not available. Risks of explosion of the product in presence of static discharge: Not available.

Fire Fighting Media and Instructions:
SMALL FIRE: Use DRY chemical powder. LARGE FIRE: Use water spray, fog or foam. Do not use water jet.

Special Remarks on Fire Hazards:
Material in powder form, capable of creating a dust explosion. When heated to decomposition it emits highly toxic fumes.

Special Remarks on Explosion Hazards: Not available.

Section 6: Accidental Release Measures

Small Spill: Use appropriate tools to put the spilled solid in a convenient waste disposal container.

Large Spill:
Use a shovel to put the material into a convenient waste disposal container. Be careful that the product is not present at a concentration level above TLV. Check TLV on the MSDS and with local authorities.

Section 7: Handling and Storage

Precautions:
Keep locked up.. Keep away from heat. Keep away from sources of ignition. Empty containers pose a fire risk, evaporate the residue under a fume hood. Ground all equipment containing material. Do not ingest. Do not breathe dust. Wear suitable

protective clothing. In case of insufficient ventilation, wear suitable respiratory equipment. If ingested, seek medical advice immediately and show the container or the label. Keep away from incompatibles such as oxidizing agents, acids, moisture.

Storage: Keep container tightly closed. Keep container in a cool, well-ventilated area.

Section 8: Exposure Controls/Personal Protection

Engineering Controls:
Use process enclosures, local exhaust ventilation, or other engineering controls to keep airborne levels below recommended exposure limits. If user operations generate dust, fume or mist, use ventilation to keep exposure to airborne contaminants below the exposure limit.

Personal Protection: Safety glasses. Lab coat. Dust respirator. Be sure to use an approved/certified respirator or equivalent. Gloves.

Personal Protection in Case of a Large Spill:
Splash goggles. Full suit. Dust respirator. Boots. Gloves. A self contained breathing apparatus should be used to avoid inhalation of the product. Suggested protective clothing might not be sufficient; consult a specialist BEFORE handling this product.

Exposure Limits:
TWA: 0.01 from ACGIH (TLV) [United States] [1995] Consult local authorities for acceptable exposure limits.

Section 9: Physical and Chemical Properties

Physical state and appearance: Solid. (Lustrous solid.)

Odor: Not available.

Taste: Not available.

Molecular Weight: 74.92 g/mole

Color: Silvery.

pH (1% soln/water): Not applicable.

Boiling Point: Not available.

Melting Point: Sublimation temperature: 615°C (1139°F)

Critical Temperature: Not available.

Specific Gravity: 5.72 (Water = 1)

Vapor Pressure: Not applicable.

Vapor Density: Not available.

Volatility: Not available.

Odor Threshold: Not available.

Water/Oil Dist. Coeff.: Not available.

Ionicity (in Water): Not available.

Dispersion Properties: Not available.

Solubility: Insoluble in cold water, hot water.

Section 10: Stability and Reactivity Data

Stability: The product is stable.

Instability Temperature: Not available.

Conditions of Instability: Not available.

Incompatibility with various substances: Reactive with oxidizing agents, acids, moisture.

Corrosivity: Non-corrosive in presence of glass.

Special Remarks on Reactivity: Not available.

Special Remarks on Corrosivity: Not available.

Polymerization: Will not occur.

Section 11: Toxicological Information

Routes of Entry: Inhalation. Ingestion.

Toxicity to Animals: Acute oral toxicity (LD50): 145 mg/kg [Mouse].

Chronic Effects on Humans:
CARCINOGENIC EFFECTS: Classified A1 (Confirmed for human.) by ACGIH. Causes damage to the following organs: kidneys, lungs, the nervous system, mucous membranes.

Other Toxic Effects on Humans:
Very hazardous in case of ingestion, of inhalation. Slightly hazardous in case of skin contact (irritant).

Special Remarks on Toxicity to Animals: Not available.

Special Remarks on Chronic Effects on Humans: Not available.

Special Remarks on other Toxic Effects on Humans: Not available.

Section 12: Ecological Information

Ecotoxicity: Not available.

BOD5 and COD: Not available.

Products of Biodegradation:
Possibly hazardous short term degradation products are not likely. However, long term degradation products may arise.

Toxicity of the Products of Biodegradation: The products of degradation are as toxic as the original product.

Special Remarks on the Products of Biodegradation: Not available.

Section 13: Disposal Considerations

Waste Disposal:

Section 14: Transport Information

DOT Classification: CLASS 6.1: Poisonous material.

Identification: : Arsenic UNNA: UN1558 PG: II

Special Provisions for Transport: Not available.

Section 15: Other Regulatory Information

Federal and State Regulations:
California prop. 65: This product contains the following ingredients for which the State of California has found to cause cancer, birth defects or other reproductive harm, which would require a warning under the statute: Arsenic California prop. 65: This product contains the following ingredients for which the State of California has found to cause cancer which would require a warning under the statute: Arsenic Pennsylvania RTK: Arsenic Massachusetts RTK: Arsenic TSCA 8(b) inventory: Arsenic

Other Regulations: OSHA: Hazardous by definition of Hazard Communication Standard (29 CFR 1910.1200).

Other Classifications:

WHMIS (Canada):
CLASS D-1A: Material causing immediate and serious toxic effects (VERY TOXIC). CLASS D-2A: Material causing other toxic effects (VERY TOXIC).

DSCL (EEC):
R22- Harmful if swallowed. R45- May cause cancer.

HMIS (U.S.A.):

Health Hazard: 3

Fire Hazard: 1

Reactivity: 2

Personal Protection: E

National Fire Protection Association (U.S.A.):

Health: 3

Flammability: 1

Reactivity: 2

Specific hazard:

Protective Equipment:
Gloves. Lab coat. Dust respirator. Be sure to use an approved/certified respirator or equivalent. Wear appropriate respirator when ventilation is inadequate. Safety glasses.

Section 16: Other Information

References:
-Hawley, G.G.. The Condensed Chemical Dictionary, 11e ed., New York N.Y., Van Nostrand Reinold, 1987. -Liste des produits purs tératogènes, mutagènes, cancérogènes. Répertoire toxicologique de la Commission de la Santé et de la Sécurité du Travail du Québec. -Material safety data sheet emitted by: la Commission de la Santé et de la Sécurité du Travail du Québec. -SAX, N.I. Dangerous Properties of Indutrial Materials. Toronto, Van Nostrand Reinold, 6e ed. 1984. -The Sigma-Aldrich Library of Chemical Safety Data, Edition II. -Guide de la loi et du règlement sur le transport des marchandises dangeureuses au canada. Centre de conformité internatinal Ltée. 1986.

Other Special Considerations: Not available.

Created: 10/09/2005 04:16 PM

Last Updated: 05/21/2013 12:00 PM

The information above is believed to be accurate and represents the best information currently available to us. However, we make no warranty of merchantability or any other warranty, express or implied, with respect to such information, and we assume no liability resulting from its use. Users should make their own investigations to determine the suitability of the information for their particular purposes. In no event shall ScienceLab.com be liable for any claims, losses, or damages of any third party or for lost profits or any special, indirect, incidental, consequential or exemplary damages, howsoever arising, even if ScienceLab.com has been advised of the possibility of such damages.

APPENDIX F

COMMUNITY AIR MONITORING PLAN

Community Air Monitoring Plan

AC Dutton Greenway City Site
Brownfield Cleanup Program Site #C314123
City of Poughkeepsie, Dutchess County, New York

1.0 INTRODUCTION

This document presents a Community Air Monitoring Plan for the A.C. Dutton Greenway Brownfield Cleanup Program (BCP) site (BCP Site No. C314123) (The Site) in the City of Poughkeepsie, Dutchess County, New York.

The Site will be developed into a greenway trail/ park open space, and then transferred to the City of Poughkeepsie to be used as a public greenway and park. A small portion of the Site, approximately 0.268 acres, will be transferred to the O'Neil Group Dutton to be used for roadway and parking in the adjacent development

The findings of all previous environmental investigations performed to date are detailed in the Fuss and O'Neill RIR, and Ecosystems Solutions Inc. (ESI's) Supplemental Investigation Report (SIR), which was performed according to the NYSDEC approved Remedial Investigation Work Plan (RIWP) and Supplemental Remedial Investigation Work Plan (SRIWP). Fuss & O'Neill prepared the RIR for O'Neill-Dutton for submittal to NYSDEC in accordance with the requirements of the BCP for the adjacent BCP Site - C#314081, which in 2005 included the Site. Therefore, a complete and approved RIR has been completed for the Adjacent BCP Site - C#314081 and this Site.

1.1 OBJECTIVES

The objective of this CAMP is to provide a measure of protection for the downwind community from potential airborne contaminant releases that might arise as a result of the planned remedial construction, which will include temporary soil stockpiling and soil and rock placement to construct the cap and the rip-rap.

1.2 METHODS

The CAMP will include monitoring for particulate matter (e.g., airborne “dust”) during the planned remedial construction that includes the temporary soil stockpiling, and soil and rock placement to construct the cap and the rip-rap. Readings will be recorded and will be available for State (DEC and DOH) personnel to review, as requested.

The imported soils to be installed as capping system are not expected to contain any VOC and therefore VOC monitoring will not be conducted.

1.2.2 PARTICULATE MONITORING

When deemed by SESI to be applicable, particulate (e.g. “dust”) emissions will be measured continuously at the upwind and downwind work zone boundaries. Real time monitoring equipment (e.g. Trak TSI Dust monitors or equivalent), with audible alarms and capable of measuring particulate matter less than 10 micrometers in size (PM-10), will be used. If the wind is calm, the monitors should be placed between each work area and the nearest sensitive receptors (i.e. the boathouse property/and or the adjacent residential properties). If the wind is variable, the monitors must be placed so as to ensure there is a monitor downwind of each work area at all times.

- If the downwind particulate level is 100 micrograms per cubic meter (ug/m3) greater than background (upwind) for a 15-minute period or if airborne dust is observed leaving the work area, then dust suppression techniques will be employed. Work will continue with dust suppression provided that downwind particulate levels do not exceed 150 ug/m3 above upwind levels and provided that no visible dust is migrating from the work area.
- If, after dust suppression techniques, downwind particulate levels are greater than 150 ug/m3 above upwind levels, work will be stopped and a re-evaluation of activities will be initiated. Work will resume, provided that dust suppression measures and other controls are successful in reducing downwind particulate concentrations to within 150 ug/m3 of the upwind level and in preventing visible dust migration.
- All readings must be recorded and be available for State (NYSDEC and NYSDOH) and County Health personnel to review.

APPENDIX G

QUALITY ASSURANCE PROJECT PLAN

Quality Assurance Project Plan

AC Dutton Greenway City Site
Brownfield Cleanup Program Site #C314123
City of Poughkeepsie, Dutchess County, New York

1.0 PROJECT DESCRIPTION

This document presents a Quality Assurance Project Plan (QAPP) for AC Dutton Greenway City Site (hereafter referred to as the "Site"); Site number C314123. The Site is located along the Hudson River, west of the "A.C. Dutton Lumber Yard" property, which is located at 1 Dutchess Avenue, City of Poughkeepsie, New York. The RAWP is prepared on behalf of Dutchess Avenue Riverwalk LLC (Volunteer).

2.0 PROJECT ORGANIZATION

The site management activities will be conducted by a qualified environmental professional, on behalf of the BCP volunteer/applicant, Dutchess Avenue Riverwalk LLC. The organization of SESI's key project management and field staff, and respective areas of responsibility, is presented below.

2.1 Project Principal

Fuad Dahan
Provide technical and administrative oversight and guidance throughout the project, assist in securing company resources, participate in technical review of deliverables, and attend key meetings as needed.

2.2 Principal Engineer

Fuad Dahan
Provide technical guidance and review of reports and analytical data. Will have key involvement in screening and development of remedial alternatives.

2.3 Project Manager

Fuad Dhana
Responsible for maintaining the day-to-day schedule for completing the fieldwork and deliverables according to BCP program requirements and client expectations.

3.0 QA/QC OBJECTIVES FOR MEASUREMENT OF DATA

In cases where NYSDOH ELAP Certification exists for a specific group or category of parameters, the laboratories performing analysis in connection with this project will have appropriate NYSDOH ELAP Certification. For analysis of samples where Analytical

Service Protocol (ASP, June 2000) Category B deliverables are required, NYSDOH ELAP CLP certification is required.

Detection limits set by NYSDEC-ASP (June 2000) will be used for all sample analyses unless otherwise noted. If NYSDEC-ASP-dictated detection limits prove insufficient to assess project goals (i.e., comparison to drinking water standards or attainment of ARARs), then ASP Special Analytical Services (SAS) or other appropriate methods will be utilized.

The quality assurance/quality control objectives for all measurement data include completeness, representativeness, comparability, precision and accuracy.

3.1 COMPLETENESS

The analyses performed must be appropriate and inclusive. The parameters selected for analysis are chosen to meet the objectives of the study.

Completeness of the analyses will be assessed by comparing the number of parameters intended to be analyzed with the number of parameters successfully determined and validated. Data must meet QC acceptance criteria for 100 percent or more of requested determinations.

3.2 REPRESENTATIVENESS

Samples must be taken of the population and, where appropriate, the population will be characterized statistically to express the degree to which the data accurately and precisely represent a characteristic of a population, parameter variations at a sampling point, a process, or environmental condition.

Non-dedicated sampling devices will be cleaned between sampling points by washing and rinsing with pesticide-grade methanol, followed by a thorough rinse with distilled water. Specific cleaning techniques are described in the Field Sampling Procedure. Two types of blank samples will accompany each sample set where Target Compound List (TCL) volatiles are to be analyzed (water matrix only). A trip blank, consisting of a 40 ml VOA vial of organic-free water prepared by the laboratory, will accompany each set of sample bottles from the laboratory to the field and back. This bottle will remain sealed throughout the shipment and sampling process. This blank will be analyzed for TCL volatile organic compounds along with the groundwater samples to ensure that contamination with TCL volatile compounds has not occurred during the bottle preparation, shipment and sampling phase of the project. In order to check for contaminant carryover when non-dedicated sampling equipment is used, a rinsate blank will be submitted to the laboratory. This blank will also be analyzed for TCL volatile organic compounds. The TCL compounds are identified in the United States Environmental Protection Agency (USEPA) Contract Laboratory Program dated 7/85 or as periodically updated.

The analysis results obtained from the determination of identical parameters in field duplicate samples can be used to further assess the representativeness of the sample data.

3.3 COMPARABILITY

Consistency in the acquisition, preparation, handling and analysis of samples is necessary in order for the results to be compared where appropriate. Additionally, the results obtained from analyses of the samples will be compared with the results obtained in previous studies, if available.

To ensure the comparability of analytical results with those obtained in previous or future testing, all samples will be analyzed by NYSDEC-approved methods. The NYSDEC-ASP mandated holding times for various analyses will be strictly adhered to.

3.4 PRECISION AND ACCURACY

The validity of the data produced will be assessed for precision and accuracy. Analytical methods which will be used include gas chromatography/mass spectrometry (GC/MS), gas chromatography (GC), colorimetry, atomic spectroscopy, gravimetric and titrametric techniques. The following outlines the procedures for evaluating precision and accuracy, routine monitoring procedures, and corrective actions to maintain analytical quality control. All data evaluations will be consistent with NYSDEC-ASP procedures. Data will be 100 percent compliant with NYSDEC-ASP requirements.

The requirements of QA/QC are both method specific and matrix dependent. The number of duplicate, spiked and blank samples analyzed will be dependent upon the total number of samples of each matrix to be analyzed, but there will be at least one split per matrix. The inclusion and frequency of analysis of field blanks and trip blanks will be on the order of one per each site. Samples to be analyzed for volatile organic compounds will be accompanied by trip and field blanks (water matrix) or field blanks (soil, sediment matrice).

Quality assurance audit samples will be prepared and submitted by the laboratory QA manager for each analytical procedure used. The degree of accuracy and the recovery of analyte to be expected for the analysis of QA samples and spiked samples is dependent upon the matrix, method of analysis, and compound or element being determined. The concentration of the analyte relative to the detection limit is also a major factor in determining the accuracy of the measurement. The lower end of the analytical range for most analyses is generally accepted to be five times the detection limit. At or above this level, the determination and spike recoveries for metals in water samples will be expected to range from 75 to 125 percent. The recovery of organic surrogate compounds and matrix spiking compounds determined by GC/MS will be compared to the guidelines for recovery of individual compounds as established by the United States Environmental Protection Agency Contract Laboratory Program dated 7/85 or as periodically updated.

The quality of results obtained for inorganic ion and demand parameters will be assessed by comparison of QC data with laboratory control charts for each test.

4.0 SAMPLING PROCEDURES

4.1 SAMPLING PROGRAM

The sampling program for this project may include soil stockpile sampling from off-site sources. Soil samples will be collected from grabs collected with stainless steel trowels or disposable equipment.

4.1.1 Stockpile Sampling Procedures

Soil samples will be collected from stockpiles and analyzed in accordance with the NYSDEC-approved Work Plan. Chain-of-custody procedures will be practiced following Section 15, EPA-600/4-82-029, Handbook for Sampling and Sample Preservation of Water and Waste Waters.

4.4 SAMPLE PRESERVATION AND SHIPMENT

Since all containers will contain the necessary preservatives as shown in Table 4.1, they need only be filled.

The containers will be sent from the laboratory in coolers which will be organized on a per site basis. Following sample collection, the containers should be placed on ice in the shipping cooler. The samples will be cooled to 4°C, but not frozen.

Final packing and shipment of coolers will be performed in accordance with guidelines outlined in the "User's Guide to the CLP".

5.0 SAMPLE CUSTODY

The program for sample custody and sample transfer is in compliance with the NYSDEC-ASP, as periodically updated. If samples may be needed for legal purposes, chain-of-custody procedures, as defined by NEIC Policies and Procedures (USEPA-330/9-78-001-R, Revised August 1991) will be used. Sample chain-of-custody is initiated by the laboratory with selection and preparation of the sample containers. To reduce the chance for error, the number of personnel handling the samples should be minimized.

5.1 FIELD SAMPLE CUSTODY

A chain-of-custody record accompanies the sample from initial sample container selection and preparation at the laboratory, shipment to the field for sample containment and preservation, and return to the laboratory. Two copies of this record follow the samples to the laboratory. The laboratory maintains one file copy and the completed original is returned to the site inspection team. Individual sample containers provided by the laboratory are used for shipping samples. The shipping containers are insulated and chemical or ice water is used to maintain samples at approximately 4°C until samples are returned and in the custody of the laboratory. All sample bottles within each shipping container are individually labeled and controlled. Samples are to be shipped to the laboratory within 24-48 hours of the day of collection.

Each sample shipping container is assigned a unique identification number by the laboratory. This number is recorded on the chain-of-custody record and is marked with indelible ink on the outside of the shipping container. The field sampler will indicate the sample designation/location number in the space provided on the appropriate chain-of-custody form for each sample collected. The shipping container is closed and a seal provided by the laboratory is affixed to the latch. This seal must be broken to open the container, and this indicates possible tampering if the seal is broken before receipt at the laboratory. The laboratory will contact the site investigation team leader and the sample will not be analyzed if tampering is apparent.

5.2 LABORATORY SAMPLE CUSTODY

The site investigation team leader or Project Quality Assurance Officer notifies the laboratory of upcoming field sampling activities and the subsequent transfer of samples to the laboratory. This notification will include information concerning the number and type of samples to be shipped as well as the anticipated date of arrival.

The laboratory sample program meets the following criteria:

1. The laboratory has designated a sample custodian who is responsible for maintaining custody of the samples and for maintaining all associated records documenting that custody.
2. Upon receipt of the samples, the custodian will check the original chain-of-custody documents and compare them with the labeled contents of each sample container for correctness and traceability. The sample custodian signs the chain-of-custody record and records the date and time received.
3. Care is exercised to annotate any labeling or descriptive errors. In the event of discrepant documentation, the laboratory will immediately contact the site investigation team leader as part of the corrective action process. A qualitative assessment of each sample container is performed to note any anomalies, such as broken or leaking bottles. This assessment is recorded as part of the incoming chain-of-custody procedure.
4. The samples are stored in a secured area at a temperature of approximately 4°C until analyses are to commence.
5. A laboratory chain-of-custody record accompanies the sample or sample fraction through final analysis for control.
6. A copy of the chain-of-custody form will accompany the laboratory report and will become a permanent part of the project records.

5.3 FINAL EVIDENCE FILES

Final evidence files include all originals of laboratory reports and are maintained under documented control in a secure area.

A sample or an evidence file is under custody if:

- It is in your possession; it is in your view, after being in your possession.
- It was in your possession and you placed it in a secure area.
- It is in a designated secure area.

6.0 CALIBRATION PROCEDURES

Instruments and equipment used to gather, generate or measure environmental data will be calibrated with sufficient frequency and in such a manner that accuracy and reproducibility of results are consistent with the appropriate manufacturer's specifications or project specific requirements. The procedures for instrument calibration, calibration verification, and the frequency of calibrations are described in the NYSDEC-CLP. The calibration of instruments used for the determination of metals will be as described in the appropriate CLP standard operating procedures.

Calibration of other instruments required for measurements associated with these analyses will be in accordance with the manufacturer's recommendations and the standard operating procedures of the laboratory.

7.0 ANALYTICAL PROCEDURES

Analytical procedures shall conform to the most recent revision of the NYSDEC-ASP (June 2000) and are summarized on Table 7.1. In the absence of USEPA or NYSDEC guidelines, appropriate procedures shall be submitted for approval by NYSDEC prior to use.

The procedures for the sample preparation and analysis for organic compounds are as specified in the NYSDEC-ASP. Analytical cleanups are mandatory where matrix interferences are noted. No sample shall be diluted any more than 1 to 5. The sample shall be either re-extracted, re-sonicated, re-stream distilled, etc. or be subjected to any one analytical cleanup noted in SW846 or a combination thereof. The analytical laboratory shall expend such effort and discretion to demonstrate good laboratory practice and demonstrate an attempt to best achieve the method detection limit.

7.1 VOLATILE ORGANICS (VOA)

The analytical procedure for volatiles is detailed in NYSDEC-ASP (Volume I, Section D-I). A measured portion of the sample is placed in the purge and trap apparatus and the sample analysis is performed by gas chromatography/mass spectrometry for the first round. USEPA Method 8260 will be used, plus tentatively identified compounds (TICs). USEPA Methods 8010 or 8020 (gas chromatography with different detectors) will be used if subsequent rounds with lower limits of detection are warranted.

7.2 SEMI-VOLATILE ORGANIC COMPOUNDS

The extraction and analytical procedures used for preparation of water, soil and sediment samples for the analysis of the TCL semi-volatile organic compounds are described in NYSDEC-ASP Volume I, Section D-III. USEPA Method 8270 will be used, plus tentatively identified compounds (TICs).

Instrument calibration, compound identification, and quantitation are performed as described in Section 6 of this document and in the NYSDEC-ASP.

7.3 PESTICIDE AND PCB COMPOUNDS

The sample preservation procedures for gas chromatography for pesticides and PCB's will be as described in the NYSDEC-ASP methods (Section D-IV). The analysis of standard mixes, blanks and spiked samples will be performed at the prescribed frequency with adherence to the 72-hour requirement described in the method.

7.4 METALS

Soil samples will be analyzed for the metals listed in Table 7.1. The detection limits for these metals are as specified in the NYSDEC-ASP, Section D-V. The instrument detection limits will be determined using calibration standards and procedures specified in the NYSDEC-ASP. The detection limits for individual samples may be higher due to the sample matrix. The procedures for these analyses will be as described in the NYSDEC-ASP.

The analyses for metals will be performed by atomic absorption spectroscopy (AAS) or inductively-coupled plasma emission spectroscopy (ICPES), as specified in the ASP with regard to AAS flame analysis.

7.5 SITE SPECIFICITY OF ANALYSES

Work plans prepared for remedial investigation waste sites contain recommendations for the chemical parameters to be determined for each site. Thus, some or all of the referenced methods will apply to the analysis of samples collected at the individual waste sites. Analyses of Target Compound List (TCL) analytes will be performed on all samples.

SAMPLE CONTAINERIZATION

ANALYSIS	NO.	BOTTLE TYPE	PRESERVATIVE(1)	HOLDING TIME(2)
Soil, Sediment, Solid Waste				
TCL organics		Wide mouth, plastic or glass	None	7 days (until extraction, 40 days extracted)
TCL inorganics		Wide mouth, plastic or glass	None	6 months Cyanide: 12 days Mercury: 28 days

(1) All samples will be preserved with ice during collection and shipment.
(2) From verified time of sample receipt by the analytical laboratory (within 24 to 48 hours of collection).
(3) Metals refers to the 24 metals and cyanide in the Target Compound List (NYSDEC-CLP 11/87).

TABLE 7-1 – CONTRACT-REQUIRED QUANTITATION LEVELS AND ANALYTICAL METHODS FOR ASP INORGANICS, ASP VOLATILES, ASP SEMI-VOLATILES, ASP PESTICIDES, AND PCBS

Superfund Target Compound List (TCL) and Contract-Required Quantitation Limit

SECTION 1 - ASP INORGANICS Method: NYSDEC-ASP-91-4					
	PARAMETER	**CONTRACT-REQUIRED DETECTION LEVEL* (µg/l)**		**PARAMETER**	**CONTRACT-REQUIRED DETECTION LEVEL* (µg/l)**
1.	Aluminum	200	13.	Magnesium	5,000
2.	Antimony	60	14.	Manganese	15
3.	Arsenic	10	15.	Mercury	0.2
4.	Barium	200	16.	Nickel	40
5.	Beryllium	5	17.	Potassium	5,000
6.	Cadmium	5	18.	Selenium	5
7.	Calcium	5,000	19.	Silver	10
8.	Chromium	10	20.	Sodium	5,000
9.	Cobalt	50	21.	Thallium	10
10.	Copper	25	22.	Vanadium	50
11.	Iron	100	23.	Zinc	20
12.	Lead	3	24.	Cyanide	10

SECTION 2 – ASP ORGANICS (VOLATILES) Method: NYSDEC-ASP-91-1					
	VOLATILE	**CONTRACT-REQUIRED QUANTITATION LIMIT** (µg/l)**		**VOLATILE**	**CONTRACT-REQUIRED QUANTITATION LIMIT** (µg/l)**
1.	Chloromethane	10	18.	1,2-Dichloropropane	10
2.	Bromomethane	10	19.	cis-1,3-Dichloropropene	10
3.	Vinyl Chloride	10	20.	Trichloroethene	10
4.	Chloroethane	10	21.	Dibromochloromethane	10
5.	Methylene Chloride	10	22.	1,1,2-Trichloroethane	10
6.	Acetone	10	23.	Benzene	10
7.	Carbon Disulfide	10	24.	Trans-1.3-Dichloropropene	10
8.	1,1-Dichloroethylene	10	25.	Bromoform	10
9.	1,1-Dichloroethane	10	26.	2-Hexanone	10
10.	1,2-Dichloroethylene (total)	10	27.	4-Methyl, 1,2-Pentanone	10
11.	Chloroform	10	28.	Tetrachloroethylene	10
12.	1,2-Dichloroethane	10	29.	Toluene	10
13.	2-Butanone	10	30.	Chlorobenzene	10
14.	1,1,1-Trichloroethane	10	31.	Ethylbenzene	10
15.	Carbon Tetrachloride	10	32.	Styrene	10
16.	Bromodichloromethane	10	33.	Total Xylenes	10
17.	1,1,2,2-Tetrachloroethane	10			

SECTION 3 - ASP ORGANICS (SEMI-VOLATILES) Method: NYSDEC-ASP-91-2					
	SEMI-VOLATILE	**CONTRACT-REQUIRED QUANTITATION LIMIT (µg/l)**		**SEMI-VOLATILE**	**CONTRACT-REQUIRED QUANTITATION LIMIT (µg/l)**
1.	Phenol	10	33.	Acenaphthene	10
2.	Bis(2-chloroethyl)ether	10	34.	2,4-Dinitrophenol	25
3.	2-Chlorophenol	10	35.	4-Nitrophenol	25
4.	1,3-Dichlorobenzene	10	36.	Dibenzofuran	10
5.	1,4-Dichlorobenzene	10	37.	Dinitrotoluene	10
6.	1,2-Dichlorobenzene	10	38.	Diethylphthalate	10
7.	2-Methylphenol	10	39.	4-Chlorophenyl phenyl ether	10
8.	2,2'oxybis(1-Chloropropane)	10	40.	Fluorene	10
9.	4-Methylphenol	10	41.	4-Nitroanile	25
10.	N-Nitroso-dipropylamine	10	42.	4,6-Dinitro-2-methylphenol	25
11.	Hexachloroethane	10	43.	N-nitrosodiphenyl amine	10
12.	Nitrobenzene	10	44.	4-Bromophenyl phenyl ether	10
13.	Isophorone	10	45.	Hexachlorobenzene	10
14.	2-Nitrophenol	10	46.	Pentachlorophenol	25
15.	2,4-Dimethylphenol	10	47.	Phenanthrene	10
16.	Bis(2-Chloroethoxy) methane	10	48.	Anthracene	10
17.	2,4-Dichlorophenol	10	49.	Carbazole	10
18.	1,2,4-Trichlorobenzene	10	50.	Di-n-butyl phthalate	10
19.	Naphthalene	10	51.	Fluoranthene	10
20.	4-Chloroaniline	10	52.	Pyrene	10
21.	Hexachlorobutadiene	10	53.	Butyl benzyl phthalate	10
22.	4-Chloro-3-methylphenol	10	54.	3,3'-Dichloro benzidine	10
23.	2-Methylnaphthalene	10	55.	Benz(a)anthracene	10
24.	Hexachlorocyclopentadiene	10	56.	Chrysene	10
25.	2,4,6-Trichlorophenol	10	57.	Bis(2-ethylhexyl) phthalate	10
26.	2,4,5-Trichlorophenol	25	58.	Di-n-octyl phthalate	10
27.	2-Chloronapthalene	10	59.	Benzo(b)fluoranthene	10
28.	2-Nitroananiline	25	60.	Benzo(k)fluoranthene	10
29.	Dimethyl phthalate	10	61.	Benzo(a)pyrene	10
30.	Acenaphthylene	10	62.	Indeno(1,2,3-cd) pyrene	10
31.	2,6-Dinitrotoluene	10	63.	Dibenz(a,h) anthracene	10
32.	3-Nitroaniline	25	64.	Benzo(g,h,i)perylene	10

SECTION 3 - ASP ORGANICS (PESTICIDES/PCBS) Method: NYSDEC-ASP-91-3			
PESTICIDE/PCB	**CONTRACT-REQUIRED QUANTITATION LIMIT (µg/l)**	**PESTICIDE/PCB**	**CONTRACT-REQUIRED QUANTITATION LIMIT (µg/l)**
1. Alpha-BHC	0.05	15. 4,4'-DDT	0.10
2. Beta-BHC	0.05	16. Methoxychlor	0.5
3. Delta-BHC	0.05	17. Endrin ketone	0.10
4. Gamma-BHC (lindane)	0.05	18. Endrin aldehyde	0.10
5. Heptachlor	0.05	19. Alpha-Chlordane	0.05
6. Aldrin	0.05	20. Gamma-Chlordane	0.05
7. Heptachlor epoxide	0.05	21. Toxaphene	5.0
8. Endosulfan I	0.05	22. AROCHLOR-1016	1.0
9. Dieldrin	0.10	23. AROCHLOR-1221	1.0
10. 4,4'-DDE	0.10	24. AROCHLOR-1232	1.0
11. Endrin	0.10	25. AROCHLOR-1242	1.0
12. Endosulfan II	0.10	26. AROCHLOR-1248	1.0
13. 4,4'-DDD	0.10	27. AROCHLOR-1254	1.0
14. Endosulfan sulfate	0.10	28. AROCHLOR-1260	1.0

*Matrix: groundwater. For soil matrix, multiply CRDL by 100.
**Quantitation limit for medium-level soil is 1,200 µg/kg (wet weight basis).

APPENDIX H

IMPORTED MATERIAL APPROVAL EMAILS

Fuad Dahan

From: Candiloro, James (DEC) [james.candiloro@dec.ny.gov]
Sent: Thursday, January 22, 2015 3:10 PM
To: Fuad Dahan; Verrigni, Jamie L (DEC)
Cc: foneill@theoneillgroup.us
Subject: RE: AC Dutton Material Importq

Fuad,

The Department has reviewed the request dated 1/20/2015 to import 20,000 CY of fill material from Marist College. Based on the information provided, the request is hereby approved.

The proposed fill material meets the Unrestricted soil cleanup objectives (SCOs) (Appendix 5 of DER-10).

Testing in accordance with the Remedial Design Work Plan and approval by the Department is required for any additional material imported from this source.

James Candiloro, P.E.
Acting Section Chief, Division of Environmental Remediation

New York State Department of Environmental Conservation
625 Broadway, Albany, NY 12233-7014
P: 518-402-9662 | F: 518-402-9679 | james.candiloro@dec.ny.gov

www.dec.ny.gov |

From: Fuad Dahan [mailto:fd@sesi.org]
Sent: Tuesday, January 20, 2015 4:53 PM
To: Verrigni, Jamie L (DEC)
Cc: Candiloro, James (DEC); foneill@theoneillgroup.us
Subject: AC Dutton Material Importq

Jamie,

Please find attached the "Request To Import/Reuse" form and the corresponding laboratory data for 20,000 CY of material proposed to be imported to the AC Dutton Site. The material will be imported from Marist College in Poughkeepsie for use to surcharge the proposed building pads. The material use is restricted residential.

Please let me know if the Department approves this request.

Thanks

Fuad

Fuad Dahan, PhD, PE, LSRP
Project Manager
SESI CONSULTING ENGINEERS
12A Maple Avenue
Pine Brook, NJ 07058

Phone: (973) 808-9050
Cell: (973) 747-9567
Fax: (973) 808-9099
fd@sesi.org
www.sesi.org

Notice to Recipient: This electronic mail transmission is privileged and confidential and is intended only for the review of the party to whom it is addressed. If you have received this transmission in error, please immediately return it to the sender. Any use, distribution, or forwarding of this e-mail is strictly prohibited. SESI Consulting Engineers will not be responsible for any loss or damage arising in any way from the use of this email. Although this e-mail and any attachments are believed to be free of any virus or other defect that might affect any computer system into which it is received and opened it is the responsibility of the recipient to ensure that it is safe for use.

Fuad Dahan

From: Verrigni, Jamie L (DEC) [jamie.verrigni@dec.ny.gov]
Sent: Wednesday, March 04, 2015 11:44 AM
To: Fuad Dahan
Cc: foneill@theoneillgroup.us; Candiloro, James (DEC)
Subject: RE: Former AC Dutton Material Import

Fuad,

The Department has reviewed the request dated February 26, 2015 to import approximately 10,000 – 15, 000 of fill material from 99 Parker Avenue in Poughkeepsie. Based on the information provided, the request is hereby approved.

The proposed fill material meets the requirements for material other than soil (i.e., gravel, rock, stone, recycled concrete or recycled brick) as specified in Section 5.4(e)5 of DER-10.

Please note that this approval pertains only to native rock from this source and does not apply to fines (i.e., soil). Testing in accordance with the Remedial Design Work Plan and approval by the Department is required for any additional material imported from this source.

Jamie Verrigni
Environmental Engineer, Division of Environmental Remediation

New York State Department of Environmental Conservation
625 Broadway, Albany, NY 12233
P: (518) 402-9662 | F: (518) 402-9679 | jamie.verrigni@dec.ny.gov

www.dec.ny.gov |

From: Fuad Dahan [mailto:fd@sesi.org]
Sent: Thursday, February 26, 2015 1:39 PM
To: Verrigni, Jamie L (DEC)
Cc: foneill@theoneillgroup.us
Subject: Former AC Dutton Material Import

Jamie,

Please find attached the "Request To Import/Reuse" form and the corresponding sieve analysis for 10,000-15,000 CY of material proposed to be imported to the AC Dutton Site. The material will be imported from 99 Parker Avenue in Poughkeepsie. The material is rock and no chemical analyses were conducted on it.

Please let me know if the Department approves this request.

Thanks

Fuad

Fuad Dahan, PhD, PE, LSRP
Project Manager
SESI CONSULTING ENGINEERS
12A Maple Avenue
Pine Brook, NJ 07058

Phone: (973) 808-9050
Cell: (973) 747-9567
Fax: (973) 808-9099
fd@sesi.org
www.sesi.org

Notice to Recipient: This electronic mail transmission is privileged and confidential and is intended only for the review of the party to whom it is addressed. If you have received this transmission in error, please immediately return it to the sender. Any use, distribution, or forwarding of this e-mail is strictly prohibited. SESI Consulting Engineers will not be responsible for any loss or damage arising in any way from the use of this email. Although this e-mail and any attachments are believed to be free of any virus or other defect that might affect any computer system into which it is received and opened it is the responsibility of the recipient to ensure that it is safe for use.