November 2008

NYSDEC Brownfield Cleanup Program

Remedial Investigation Work Plan

Old Champlain Mill Site
(BCP Site No. C558036)

16-50 Poultney Street
Village of Whitehall
Washington County, New York

Prepared for:

Mr. Rod Donnelly
Poultney Street Partners, LLC
557 Route 23 South
Wayne, New Jersey 07470

Prepared by:

C.T. MALE ASSOCIATES, P.C.
50 Century Hill Drive
P.O. Box 727
Latham, New York 12110
(518) 786-7400
FAX (518) 786-7299

C.T. Male Project No: 06.6448

Unauthorized alteration or addition to this Document is a violation of Section 7209 Subdivision 2 of the New York State Education Law.

© Copyright 2008
C.T. MALE ASSOCIATES, P.C.

C.T. MALE ASSOCIATES, P.C.
50 Century Hill Drive
Latham, NY 12110-0727
518.786.7400 Fax: 518.786.7299

Architecture and Building Systems Engineering
Civil Engineering
Environmental Services
Survey and Land Information Services

LETTER OF TRANSMITTAL

TO: Ms. Alicia Thorne, P.E.	DATE 11/13/2008 PROJECT NO: 06.6448
NYSDEC 232 Golf Course Road P.O. Box 220 Warrensburgh, New York 12885	RE: Old Champlain Mill BCP Site Whitehall, New York BCP Site No. C558036

☑ ENCLOSED/DISTRIBUTED VIA ☐ USPS ☐ FED EX ☐ COURIER ☑ UPS

ARE THE FOLLOWING ITEMS:

☐ APPLICATION/FORM ☐ CD/DISK ☐ LEGAL DESCRIPTION ☑ REPORT
☐ CERTIFICATION ☐ CONTRACT ☐ MEETING NOTES ☐ SHOP DRAWING PRINT
☐ CHANGE ORDER ☐ COST ESTIMATE ☐ PROJECT MANUAL ☐ SPECIFICATIONS
☐ CHECK CASH ☐ DRAWINGS ☐ PROPOSAL
☐ OTHER: _____

NO OF ORIG.	NO OF COPIES	IDENT. NO	DATE	DESCRIPTION	ACTION CODE
	1	06.6448	11/13/2008	Responses to Draft RI Work Plan Comments	

NYSDEC
RECEIVED
NOV 14 2008
Region 5
Warrensburg Spill Response

ACTION CODES: FS- FURNISH AS SUBMITTED RR-REVISE AND RESUBMIT FC-FURNISH AS CORRECTED S-SUBMIT SPECIFIED ITEM R-REJECTED

FOR: ☑ APPROVAL ☐ REVIEW ☐ YOUR USE ☐ INFORMATION ☐ DISTRIBUTION ☐ OTHER

COMMENTS:

COPIES TO: Wendy Kuehner, NYSDOH
Rod Donnelly
Gary Bowitch, Esq.

SIGNED: _____
NAME: Stephen Bieber
TITLE: Environmental Scientist

C.T. Male Associates, P.C. is committed to equal opportunity for all persons regardless of race, color, sex, national origin, marital status, handicap, or veteran's status. In striving to eliminate discrimination in the work place, it is our policy to deal only with sub-contractors, vendors, suppliers, and other affiliates who recognize and support equal employment opportunity and comply with all applicable State and Federal Equal Employment Opportunity laws and regulations, including the annual filing of Standard Form EEO-1

C.T. MALE ASSOCIATES, P.C.

50 Century Hill Drive, P.O. Box 727, Latham, NY 12110-0727
518.786.7400 FAX 518.786.7299 ctmale@ctmale.com

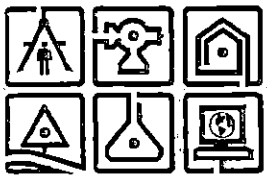

NYSDEC
RECEIVED
NOV 14 2008
Region 5
Warrensburg Spill Response

November 11, 2008

Ms. Alicia Thorne, P.E.
NYS Department of Environmental Conservation
Division of Environmental Remediation
232 Golf Course Road
P.O. Box 220
Warrensburg, New York 12885

RE: Old Champlain Mill BCP Site
BCP Site No. C558036

Dear Ms. Thorne:

Please find attached changes made to the Draft Remedial Work Plan for the Old Champlain Mill BCP Site (BCP Site No. C558036) located at 15-60 Poultney Street in the Village of Whitehall, Washington County, New York. The changes to the Work Plan were made in accordance with comments in your letter dated September 16, 2008, which is presented in Attachment A. Please replace the following sections of the Draft Work Plan with the attached updated sections.

- Text body of the Draft Work Plan (Attachment B);
- Figure 2, Proposed BCP Sampling Locations Map (Attachment C);
- Text body of Appendix A, Field Sampling Plan (Attachment D); and
- Entirety of Appendix D, Citizen Participation Plan (Attachment E).

In addition to the referenced sections in the DEC comment letter that were responded to in the Field Sampling Plan (Appendix A) and Citizen Participation Plan (Appendix D), please note the additional modifications:

- Line item 5 in the DEC comment letter *"Appendix A, Field Sampling Plan, Page 15, Section 4.4"*: Change was made to section 4.5, Sample Collection, not Section 4.4.
- Line item 7 in DEC comment letter "Appendix A, Field Sampling Plan, Page 23, Soil Gas Survey": Pages 23 to 26 (Section 8.0) are devoted to soil gas sampling procedures.
- All changes to the Citizen Participation Plan are as indicated in the DEC comment letter with the addition of the following change. Page 7, first line under Investigation header, change *"If the Applicant conducts a remedial investigation (RI) of the site, it will be performed with NYSDEC oversight."* to *"The*

applicant will conduct a remedial investigation (RI) of the site per the approved work plan, and the RI performed with NYSDEC oversight."

Upon further review of the work plan, a site reconnaissance conducted on September 26, 2008, and telephone conversations with you, the following additions have been incorporated into the work plan.

- *Page 15 of the Work Plan, 2nd bulleted paragraph.* Two soil samples are proposed to be collected from each of the soil borings. One of the samples will be analyzed for the TCL/TAL groups of compounds and analytes. The second sample will be analyzed for the TCL for volatile organic compounds in an attempt to further define both the extent and potential source for chlorinated volatile organic compounds.
- *Figure 2 of the Work Plan, Proposed BCP Sampling Locations Map.* Proposed borings/monitoring wells BMW-16A and BMW-17A have been relocated from their original locations within the building's floor slab. The site reconnaissance showed these areas of the floor slab to be underlain by open voids.
- *Page 18 of the Work Plan, 2nd bulleted paragraph and page 20 of the Work Plan, 6th bulleted paragraph.* A non-emergency IRM will be conducted in relation to the loading and off-site disposal of stockpiled wood derived from the demolition of the site's former building. The IRM will be conducted for the reason that the wood is viewed as a solid waste and that the location of the wood may pose a hindrance to the site investigation.

I will await your response to this letter prior to forwarding the changes to the document repositories in the event that you have any questions and/or comments. Due to economic times, it is anticipated that the investigative work will commence after January 2009.

Respectfully,

C.T. MALE ASSOCIATES, P.C.

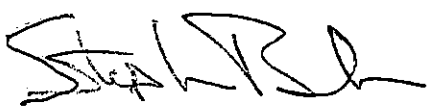

Stephen Bieber
Environmental Scientist

Attachments:

Attachment A:	DEC Draft RI Work Plan Comment Letter
Attachment B:	Text body of the Draft Work Plan
Attachment C:	Figure 2, Proposed BCP Sampling Locations Map
Attachment D:	Text body of Appendix A, Field Sampling Plan
Attachment E:	Entirety of Appendix D, Citizen Participation Plan

c: Rod Donnelly
Gary Bowitch, Esq.
Wendy Kuehner, NYSDOH
Kirk Moline, C.T. Male

ATTACHMENT A

DEC Draft RI Work Plan Comment Letter

New York State Department of Environmental Conservation
Office of Environmental Quality, Region 5
Division of Environmental Remediation
232 Golf Course Road– P.O. Box Warrensburg, New York 12885
Phone: (518) 623-1238 • **FAX:** (518) 623-4193
Website: www.dec.ny.gov

Alexander B. Grannis
Commissioner

September 16, 2008

RECEIVED
SEP 17 2008
C.T. MALE ASSOCIATES, P.C.

Mr. Steve Bieber
C.T. Male Associates, P.C.
50 Century Hill Dr., P.O. Box 727
Latham, NY 12110-0727

Re: Draft Remedial Investigation Work Plan
Old Champlain Mill Site, BCP Site No. C558036
Village of Whitehall, Washington County

Dear Mr. Bieber:

The New York State Departments of Environmental Conservation (NYSDEC) and Health (NYSDOH) have reviewed the November 2007 Draft Remedial Investigation Work Plan for the above referenced site and find it acceptable, given the following:

1. Page 14, Section 3.2, Second Bullet: The last sentence states that SS-11 (shouldn't this read SS-10?), a surface soil sample, will be collected beneath the slab. Please note that sub-slab samples do not qualify as surface soil. Please either label this sample as sub-slab or relocate this sample to an actual surface soil area.

2. Page 16, First Paragraph: The statement that "(I)t is anticipated that one soil sample will be collected above the water table . . . for laboratory analysis." should be revised to allow soil sampling to be biased towards those areas exhibiting elevated photoionization detector (PID) readings or exhibiting contamination based on field observations.

3. Page 17, last bullet: The work plan states that plans for a soil gas survey are not included in this document, and that the need for such a survey will be determined by the DEC and/or DOH upon review of preliminary analytical data generated during the RI. It also reads that a plan will be prepared if the project managers feel such a survey is warranted. Based on site data collected to date, which detected levels of chlorinated volatile organic compounds that exceed NYSDEC guidelines, a soil vapor survey is warranted at this time, and sampling of this media needs to be included in the RI work plan for review.

4. Page 24, Second Bullet: Please update the DOH project manager contact information to include Ms. Wendy Kuehner, P.E.

5. Appendix A, Field Sampling Plan, Page 15, Section 4.4: This section should include an indication as to whether low flow or filtered versus unfiltered sampling techniques will be applied.

6. Appendix A, Field Sampling Plan, Page 19, Section 5.1, Headspace Analysis: This section should include the potential need for performing the PID readings in a warmed vehicle should the field work be performed during colder weather.

7. Appendix A, Field Sampling Plan, Page 23, Soil Gas Survey: As mentioned above, previous data indicates that an evaluation of soil vapor is needed at this site. Although the average groundwater depth is reported to be 1 foot, it was noted elsewhere in the report that water levels vary and that at least three feet to groundwater does occur. Therefore, soil vapor sample collection can occur per the NYSDOH guidance. In addition, it is reported that the former building slab remains at the site. Sampling protocol requires that sub-slab vapor samples be collected no more than two inches into the sub-grade material.

8. Appendix D, Citizen Participation Plan, Page 3: Please update this section to include the site number as C558036 and update the website to: http://www.dec.ny.gov/chemical/8450.html.

9. Appendix D, Citizen Participation Plan, Appendix B, Page 11: Please update the site contact Citizen Participation Specialist to David Winchell, please change my phone number to (518) 623-1238, and include Ms. Wendy Kuehner's contact information. In addition, please correct the typographical error under Village of Whitehall Clerk's Office.

10. Appendix D, Citizen Participation Plan, Appendix C, Page 12: Please omit the actual list of adjacent property owner addresses from the Brownfield Site Contact List and replace with the following statement under the section "Adjacent Property Owners:"

> "The list of adjacent property owners is kept confidential in the NYSDEC project manager's files. If you would like to be included in the list, please contact the NYSDEC project manager, Ms. Alicia Thorne directly at (518) 623-1238."

Please modify the document by submitting revised replacement pages to all project repositories, including this office, and copying this office on the transmission. If you have questions, please feel free to contact me at (518) 623-1238. Thank you.

Sincerely,

Alicia Thorne, P.E.
Environmental Engineer 2

AT:lc

ec: R. Quail, DFWMR - NYSDEC, Albany
W. Kuehner - NYSDOH, Troy
K. Moline - C.T. Male
R. Donnelly - Poultney Street Partners

REMEDIAL INVESTIGATION WORK PLAN
OLD CHAMPLAIN MILL SITE
VILLAGE OF WHITEHALL
WASHINGTON COUNTY, NEW YORK

TABLE OF CONTENTS

PAGE

1.0 INTRODUCTION & PURPOSE 1
1.1 Introduction 1
1.2 Purpose 2

2.0 SITE DESCRIPTION & HISTORY 3
2.1 Site Description 3
2.1.2 Site Utilities 4
2.1.3 Site Drainage Features 4
2.1.4 Topographic Description and Nearby Surface Water Bodies 4
2.1.5 Site Geology 5
2.2 Environmental Site History 6
2.2.1 Previous Property Use 6
2.2.2 Historical Chemical Use 6
2.2.3 Environmental Orders, Decrees and Violations Associated with the Site 6
2.3 Previous Environmental Investigations 7
2.3.1 2002 and 2006 C.T. Male Phase I ESAs 8
2.3.2 2006 C.T. Male Phase II ESA 9
2.3.3 2007 C.T. Male Supplemental Phase II ESA 10
2.4 Historical Documents and Interviews 11
2.4.1 Historical Aerial Photographs 11
2.4.2 Historical Map Review 11
2.4.3 Interviews 11

3.0 OBJECTIVES, SCOPE & RATIONALE 14
3.1 Objectives 14
3.2 Scope 14
3.3 Rationale 19

4.0 SUPPLEMENTAL PLANS 21
4.1 Field Sampling Plan 21
4.2 Quality Assurance/ Quality Control Plan 21
4.3 Health and Safety Plan 21

REMEDIAL INVESTIGATION/ALTERNATIVES ANALYSIS WORK PLAN
OLD CHAMPLAIN MILL SITE
VILLAGE OF WHITEHALL
WASHINGTON COUNTY, NEW YORK

TABLE OF CONTENTS

4.4 Citizen Participation (CP) Plan 22

5.0 REPORTING AND SCHEDULE 23

5.1 Reporting 23

5.2 Schedule 23

6.0 SUBMITTALS 24

FIGURES

Figure 1: Site Location Map

Figure 2: Proposed BCP Media Sampling Locations Map

APPENDICES

Appendix A: Field Sampling Plan

Appendix B: Quality Assurance Project Plan

Appendix C: Site Specific Health and Safety Plan

Appendix D: Citizen Participation (CP) Plan

EXHIBITS

Exhibit 1: Survey: "Map of Survey Prepared For Old Champlain Mill, Inc", dated May 13, 2002.

Exhibit 2: 2006 C.T. Male Phase I ESA

Exhibit 3: 2006 C.T. Male Phase II ESA

Exhibit 4: 2007 C.T. Male Supplemental Phase II ESA

Exhibit 5: 2001/2002 URS Investigations

Exhibit 6: 1996 Consent Decree

1.0 INTRODUCTION & PURPOSE

1.1 Introduction

This work plan is being submitted by Poultney Street Partners, LLC (PSP) concurrently with an application to the New York State Department of Environmental Conservation (DEC) for participation in the NYS Brownfield Cleanup Program (BCP) in relationship to the property known as the Old Champlain Mill Site located at 16-50 Poultney Street in the Village of Whitehall, Washington County, New York (herein "the Site"). A Site Location Map is presented as Figure 1.

To aid in the development of the Remedial Investigation (RI) Work Plan, a pre-application project scoping meeting with DEC personnel was held in September 2007. The purpose of the meeting was to allow the agency personnel to gain a better understanding of the Site's historic use and the Site's current environmental status as obtained from previous environmental investigations of the Site and its south adjoining property, and to discuss environmental investigation requirements for the BCP Remedial Investigation.

The proposed investigation generally consists of the collection and analysis of surface soil samples, sediment samples, surface water samples, soil gas samples, the advancement of test pits to investigate a potential source area for known Site contaminants and to aid in the collection of subsurface soil samples, the advancement of soil borings that will be converted to monitoring wells to aid in the collection of soil and groundwater samples to further delineate the nature and extent of known Site contaminants, a Fish and Wildlife Impact Analysis (FWIA), and a non-emergency Interim Remedial Measure (IRM) for the off-site disposal of stockpiled wood derived from the demolition of the site's former building.

This RI Work Plan will become an appendix to the Brownfield Cleanup Program Agreement. The work plan is a working document that may be modified by PSP and DEC under the terms and conditions of the Brownfield Cleanup Agreement.

1.2 Purpose

The purpose of the RI Work Plan is to describe the investigations required to define the nature and extent of contamination. From this data decisions regarding the need for remedial actions are made and appropriate remedial options are evaluated based in part on the intended use of the Site. The Work Plan outlines a systematic investigation specific to the Site characteristics considering the Site's history, geology, hydrogeology, known or suspected contaminants and contemplated future use. The target goals of this BCP investigation will be to identify contaminants of concern, define the horizontal and vertical extent of such contamination, and to produce data of sufficient quantity and quality to support the development of an acceptable Remedial Action Work Plan, if necessary.

It is our understanding that the contemplated reuse of the Site is commercial use.

2.0 SITE DESCRIPTION & HISTORY

2.1 Site Description

The subject Site is located at 16-50 Poultney Street (US Route 4) in the Village of Whitehall, Washington County, New York. The Site is located on the south side of Poultney Street and is bound to the east by Wood Creek and to the west by the Champlain Canal. The Site was identified on the Village of Whitehall tax maps as being within the parcel with section 60.6, block 1 and lot 5. A Site location map is included as Figure 1. A map showing the Site property boundaries is included as Figure 2.

The subject Site incorporates approximately 11.49 acres of fairly level land, though the adjoining Poultney Street roadway to the north of the Site sits at an elevation higher than that of the subject Site. With the exception of a brick smoke stack and small sewage pump station, no buildings are currently located on the Site. Formerly, the Site was occupied by a 120,000 square foot manufacturing facility and an approximate 5,000 square foot power house. The manufacturing building was a one story brick structure which was reportedly constructed in 1916 and demolished in 2003. The building was constructed on a slab foundation. Much of the foundation of the former manufacturing building remains on the Site. The power house was a one story brick building located to the south of the factory building. The power house was also reportedly constructed in 1916 and formerly housed the boiler for the manufacturing building. Much of the concrete slab foundation for the power house also remains on the Site. A fenced in sewage pump station occupies the southeastern portion of the Site. According to a Title Report prepared by Chicago Title Insurance Company, there is an easement to the Town of Whitehall for the underground pump station and installation of sanitary sewer force main.

The Site was reportedly first developed as a silk mill. The Site was used for this purpose until 1959 at which point the building was used to manufacture newspaper vending machines. The Site was used for this purpose until 2001. The buildings formerly located on the Site are indicated to have been demolished in 2003. These buildings reportedly had not been used since 2001.

A paved driveway enters the Site from Poultney Street on the eastern portion of the Site. The driveway leads to a paved parking area located north of the location of the former manufacturing building. A gravel driveway traverses the eastern portion of the Site providing access to the sewage pump station.

A Boundary Survey Map for the Site entitled "Map of a 6 Lot Subdivision Made For Old Champlain Mill, Inc.", prepared by David J. Bolster, dated May 13, 2002 is presented as Exhibit 1.

2.1.2 Site Utilities

Public water and sanitary sewer are available to the project Site and are provided by the Town of Whitehall. The public sanitary sewer was reportedly not made available to the Site until 1976. Electricity to the Site is provided by National Grid.

2.1.3 Site Drainage Features

The Champlain Canal borders the Site to the west and Wood Creek borders the Site to the east. Man-made earthen dikes (constructed in the 1930's and amended in the 1980's) serve as flood barriers between the western portion of the Site and the Champlain Canal and the eastern portion of the Site and Wood Creek. Eight (8) wetlands have been identified on the subject Site (Figure 2) and comprise a total land area of approximately 2.05 acres of the Site's 11.49 acres. Surface water generated through precipitation events appears to sheet flow into the wetlands and/or pools along the earthen dikes.

2.1.4 Topographic Description and Nearby Surface Water Bodies

According to the United States Geological Survey (USGS) Topographic Map (Figure 1), the subject Site lies at approximately 130 feet above Mean Sea Level. The Champlain Canal borders the Site to the west and Wood Creek borders the Site to the east.

According to the Federal Emergency Management Agency (FEMA) flood insurance rate map, the central portion of the property is mapped as Zone C, which is outside of the 500-year floodplain (Community Panel No. 360889B). It is likely that the Zone C classification is due in part to the presence of dikes surrounding the central portion of

the property. On the eastern and western boundaries, the lands which appear to be outside of the dikes are labeled Zone A, which is within a 100-year floodplain.

2.1.5 Site Geology

Soils are mapped by the Washington Soil Survey as Limerick silt loam with a small area of Saco silt loam. The Limerick series consists of deep, poorly drained medium-textured soils formed in alluvial deposits of silt and very fine sand. They are nearly level and are found in low areas on flood plains. The Saco series consists of deep, very poorly drained medium textured soils formed in silty alluvial sediments. They are nearly level and are in low areas on flood plains that are subject to frequent flooding. Surficial geology is mapped as lacustrine silt and clay. These soils consist of laminated silts and clays which are generally calcareous, with low permeability and potential land instability. They range in thickness up to 50 meters.

The Site's geology, as detailed during the advancement of soil borings as part of previous investigations of the Site conducted by C.T. Male and through review of investigations conducted on the Site's south adjoining Poultney Street Inactive Hazardous Waste Site (IHWS) (see section 2.4) is as follows. The Site's geology, in terms of the overburden soils is relatively complex. Beneath the relative thin layer of fill materials mantling the Site, the native soils are characteristic of fluvial sediments (sands, silts and clays) deposited within the flood plain of a stream or river. Within the depths explored during the previous investigations, the soil stratigraphy is generally characterized as interlayered deposits of fine sand with little silt, silt and clay, coarse sand with little silt, and clay. The top of bedrock is reported in the investigation of the Poultney Street Site to be present at approximately 50 to 100 feet below existing grades and a basal clay layer at depths of approximately 20 feet forming the bottom of the shallow overburden aquifer of the Site. According to DEC Region 5 representatives, several deep geotechnical test borings were completed within the Poultney Street IHWS which documented the basal clay unit to extend from approximately 20 to 50 feet below existing grades.

2.2 Environmental Site History

2.2.1 Previous Property Use

The Site was reportedly developed in 1916 as a silk mill. The Site was used for this purpose until 1959 at which point the building was used to manufacture newspaper vending machines. The Site was used for this purpose until 2001 and was demolished in 2003.

2.2.2 Historical Chemical Use

Petroleum fuels, solvents, dyes, paints and heavy metals may have been used in association with past manufacturing uses of the Site.

2.2.3 Environmental Orders, Decrees and Violations Associated with the Site

Currently there are no known active Orders, Decrees or Violations concerning environmental issues at the Site. According to regulatory databases reviewed as part of a Phase I Environmental Site Assessment conducted on the Site by C.T. Male in 2006 (see section 2.4 and Exhibit 1 for more detail), the Site was identified on several environmental databases and lists. Two Petroleum Bulk Storage Registrations were identified for the Site. Additionally, three spills with the New York State Department of Environmental Conservation and one emergency response notification system (ERNS) report were identified for the Site. The Site was also identified as a RCRA generator. All related spills for the Site have been closed by the DEC. The following provides a brief summary of the Site's listing in the databases.

Three (3) spills were identified for the Site. The spills occurred in 1992, 1995 and 2005. The 1992 spill constituted the release into a floor drain inside the building of 150 gallons of stripping agent. The 1995 spill involved the alleged deliberate dumping. The 2005 spill constituted the release of approximately one (1) gallon of an unknown hazardous material.

The Site was identified on the State PBS facilities list in regards to the existence of aboveground fuel oil tanks at the Site. The tanks are listed as closed.

The subject Site was identified on the ERNS list in relation to 150 gallons of a chemical mixture (see 1992 spill above) being released to a drain which discharged to the canal.

The subject Site was identified as a RCRA large quantity generator during its operations. No violations were listed for the Site.

2.3 Previous Environmental Investigations

C.T. Male has conducted four (4) environmental investigations of the Site and has reviewed Site related documentation contained in portions of environmental investigations conducted by others on the Site's south adjoining Poultney Street Inactive Hazardous Waste Site.

Previous environmental investigations conducted of the Site by C.T. Male and Site related documentation of environmental investigations conducted on the Site's south adjoining Poultney Street Inactive Hazardous Waste Site are listed below.

- Draft Phase I Environmental Site Assessment, Old Champlain Mill Site, prepared by C.T. Male Associates, P.C., dated June 28, 2002 (2002 C.T. Male Phase I ESA).
- Draft Phase I Environmental Site Assessment, Old Champlain Mill Site, prepared by C.T. Male Associates, P.C., dated August 8, 2006 (2006 C.T. Male Phase I ESA).
- Phase II Environmental Site Assessment, Old Champlain Mill, prepared by C.T. Male Associates, P.C., dated December 22, 2006 (2006 C.T. Male Phase II ESA).
- Supplemental Phase II Environmental Site Assessment, Old Champlain Mill, prepared by C.T. Male Associates, P.C., dated August 6, 2007 (2007 C.T. Male Supplemental Phase II ESA).
- Project Site specific portions of a Remedial Investigation/Feasibility Study Work Plan, Poultney Street Site, prepared by URS Corporation Group Consultants, dated November 2001 and Poultney Street Site Sampling Results letter correspondence prepared by URS Corporation Group Consultants, dated June 19, 2002 (2001/2002 URS Investigations).

The August 8, 2006 Draft Phase I Environmental Site Assessment (ESA) is presented in Exhibit 2 with the text body of the June 28, 2002 Draft Phase I ESA appended to the 2006 ESA. The December 22, 2006 Phase II ESA is presented in Exhibit 3 and the August 6,

2007 Supplemental Phase II ESA is presented in Exhibit 4. The URS work plan and letter correspondence are presented in Exhibit 5.

2.3.1 2002 and 2006 C.T. Male Phase I ESAs

Recognized environmental conditions presented in the findings of the 2002 and 2006 C.T. Male Phase I ESAs (Exhibit 2) included the following:

The subject was utilized for manufacturing purposes since the early 1900's. The mill was reportedly originally used to manufacture silk, and from 1959 to 2001 to manufacture metal vending machines. The buildings associated with these prior uses were demolished in 2003, with the exception of a brick smoke stack which remains on Site.

The Site was identified on several searched regulatory databases and lists. Two Petroleum Bulk Storage Registrations were identified for the Site. Additionally, three spills with the New York State Department of Environmental Conservation and one emergency response notification system (ERNS) report were identified for the Site. The Site was also identified as a RCRA generator. The spills associated with the Site have been closed by the DEC.

Approximately 20 empty drums and containers were identified on the subject Site during the 2006 Phase I ESA site reconnaissance. The current property owner at that time (Peter Ward of Champlain LLC) indicated that the drums and containers were empty, although one 5-gallon container appeared to contain product. The current disposition of the drums and containers is unknown.

Several floor drains were noted throughout the foundation remains. Several outlet pipes were identified during the 2002 environmental Site assessment of the Site which existed along the southern and northern exterior walls of the Site building. Additionally, it is reported that municipal sewer was not available to the subject Site until 1976. It is unknown if disposal features such as dry wells or septic systems were used on the Site prior to 1976. A potential dry well was identified during the 2002 assessment of the Site. The potential dry well appears to have been destroyed due to the demolition activities.

Piles of debris were noted on the Site consisting of building demolition debris (including brick, concrete, dimensional wood, insulation and scrap metal), household debris, drums and containers and a scrap metal pile.

A hazardous waste facility abuts the project Site to the south. A DEC Record of Decision (Site Number 5-58-019) has been issued for remediation of contaminants at this property.

2.3.2 2006 C.T. Male Phase II ESA

Based on the information and data gathered and evaluated within the 2002 and 2006 Phase I ESAs, the 2006 C.T. Male Phase II ESA (Exhibit 3) was conducted to evaluate the Site for potential impacts to soil and groundwater from both on-Site sources and the Site's south adjoining Poultney Street Inactive Hazardous Waste Site (see Exhibit 5).

The investigation was completed through the advancement of 13 soil borings, of which 11 were converted to monitoring wells, to aid in the collection of soil and groundwater samples for subjective and laboratory analysis, and the collection of a surface water sample for laboratory analysis of pooled groundwater within the confines of the former building foundation. The soil samples were subjectively assessed for impacts employing PID headspace analysis and organoleptic (sight and smell) perception. The groundwater and surface water samples were analyzed for VOCs and metals with the exception of a groundwater sample collected from monitoring well MW-12, which in addition to analysis for VOCs and metals was also analyzed for SVOCs.

The findings of the investigation depicted 2 chlorinated volatile organic compounds (cis-1,2-dichloroethene and trichloroethene) at concentrations slightly exceeding DEC regulatory guidelines in groundwater sampled from monitoring wells MW-2 and MW-10 and 2 metals (lead and chromium) slightly above guidelines in groundwater sampled from monitoring wells MW-3 and MW-5. These findings indicated that contaminants above regulatory guidelines were present on the project Site that may have either originated from past operations at the Site and/or from the Site's south adjoining Poultney Street Inactive Hazardous Waste Site, as this site was also impacted by chlorinated VOCs. However, upon presentation of the analytical results to the DEC, the DEC indicated that the data obtained was insufficient to determine if the Site's south adjoining Poultney Street Inactive Hazardous Waste Site was the source for Site

contaminants. The DEC did indicate that SVOCs were detected in surface soils on the project Site during previous investigations of the adjoining hazardous waste facility.

2.3.3 2007 C.T. Male Supplemental Phase II ESA

The Supplemental Phase II ESA (Exhibit 4) was conducted to determine the quality of soil and groundwater at the Site with respect to the recognized environmental conditions identified through the 2002 and 2006 Phase I ESA activities and to further define the extent of VOC contamination identified during the Phase II ESA. The supplemental Phase II ESA activities were developed in part on the basis of a file review of the adjacent inactive hazardous waste facility (Exhibit 5) and a groundwater elevation survey to determine the direction of groundwater flow across the Site.

The Supplemental Phase II activities included a subsurface investigation which included the advancement of ten soil borings which were converted to groundwater monitoring wells that extended to the top of the confining clay layer (section 2.1.5), the collection of soil samples for field vapor screening and the collection and analysis of surface soil samples and groundwater samples for laboratory analysis.

Results of the Supplemental Phase II ESA revealed the following:

Elevated PID readings were noted in eight soil samples at five boring locations, generally within the soil samples recovered from 12 feet and deeper, mainly within sand layers. Petroleum or chemical odors or staining were not noted in these samples. The source area (where the solvents may have escaped into the environment) had not been identified. It was expected that if the source was a release to the near surface soils, there would be evidence of soil impacts at depths shallower than 12 feet below grade.

Seven (7) chlorinated VOCs were detected at concentrations exceeding DEC guidelines in the groundwater samples from the various monitoring wells. Chlorinated solvent compounds are most often denser than water and therefore have a tendency to sink within the aquifer until some form of hydraulic barrier (clay layer) is encountered.

Several SVOCs were detected above their respective soil cleanup guidance values in the surface soil samples collected in the vicinity of the old boiler house. These detections were possibly related to traces of coal, ash and cinders within the surface soils.

Overall, groundwater was determined to be generally from the south to the north with a southeast to northwest trend on the western portion of the Site and a southwest to northeast trend on the eastern portion of the Site. The extent of groundwater impacts by the chlorinated compounds, both vertically and horizontally, were not defined within the monitoring well array installed as part of the Phase II ESA and Supplemental Phase II ESA.

Based on the results of the investigations, the data did not suggest that groundwater impacts within the subject Site were related to those at the Poultney Street Inactive Hazardous Waste Site as the monitoring wells located between the two areas of contamination did not exhibit groundwater impacts of the magnitude that could positively link the two areas. However, the data was insufficient to rule out a contribution from the Poultney Street Inactive Hazardous Waste Site.

2.4 Historical Documents and Interviews

Historical documents for the Site were obtained as part of the 2002 and 2006 Phase I ESA's of the Site and included aerial photographs, Sanborn Fire Insurance Maps, and interviews with persons familiar with the Site. Full detail of the historical documents is presented in the 2006 C.T. Male Phase I ESA (Exhibit 2). The following sections summarize the historical documents contained within the ESA.

2.4.1 Historical Aerial Photographs

Aerial photographs reviewed for the years 1942, 1981, 1991, 1992 and 1994 showed the Site layout to be similarly improved with the factory building and the power house.

2.4.2 Historical Map Review

A 1955 Sanborn Fire Insurance index map for Whitehall indicated the Site was occupied by "Champlain Spinners, Inc., Plant No. 2", however, specific coverage of the Site was not provided.

2.4.3 Interviews

An interview conducted with Peter Ward (Site owner in 2006) indicated the following:

Several drums and containers were removed from the Site by an environmental contractor.

An above ground petroleum storage tank was removed from the Site and was sold for re-use. The Site's PBS registration was reportedly not updated to reflect this change.

The former water supply well for the Site was plugged.

Three Non-PCB pad mounted transformers were removed from the Site prior to the demolition of the Site building.

Asbestos was removed from the Site building prior to demolition.

A former employee of EB Metal Industries, Inc., Mr. Ron Roberts, was interviewed as part of the 2002 Phase I ESA. Mr. Roberts reported that EB Metals utilized the Site as a sheet metal fabrication shop which included a painting process to produce newspaper vending machines. Mr. Roberts had offered the following information:

Paints used at the Site were initially solvent based paints. These paints became obsolete and were replaced with powder paints. The solvent based paints were stored in the power house once they became obsolete. Medium grade solvents were also used on the Site.

No underground storage tanks were located on the Site due to the high water table. A 10,000 gallon above ground fuel oil tank was previously located on the Site. The tank was decommissioned and removed from the Site. The power house housed a fuel oil boiler which was dismantled in the 1970s.

Appurtenances located on the exterior of the Site buildings are reported to be hydrants, dry hydrants and sprinkler shut-offs.

The Site flooded several times including a significant flood in the mid 1980s. This flood was caused by work being completed by the New York State Department of Transportation on a coffer dam. The flood resulted in contamination by solvents on the subject Site property. Soil borings and/or monitoring wells were reportedly installed on the Site following the flood, but were removed in the late 1980s.

A pile of scrap metal noted on the southeastern portion of the Site is reported to be cigarette vending machines damaged during the flood as well as empty drums.

Prior to connecting to the municipal sewer system, drainage from the Site was to both the Champlain Canal and to Wood Creek. Floor drains within portions of the manufacturing building were reportedly used to collect steam condensation and returned to the power house.

EB Metal Industries role in the hazardous waste facility located immediately adjacent to the Site was allegedly limited. Drums which were burned and/or dumped on this adjoining property were from an off-site source and did not originate from EB Metals. EB Metals role in the hazardous waste facility was limited, and they settled with the state. The settlement, as promulgated in a Consent Decree (Index 93-CV-1356) issued by the United States District Court – Northern District of New York (attached as Exhibit 6), and signed by the parties in March 1996, absolved E.B. Metals of present and future claims or causes of action which the State (NYSDEC) had, has or may have against E.B. Metals and its successors or assigns with respect to the Poultney Street Site in consideration of the payment of $15,000.00.

3.0 OBJECTIVES, SCOPE & RATIONALE

3.1 Objectives

The objective of the RI Work Plan is to provide a description of and the rationale for the investigative approach to be implemented to characterize the nature and extent of the potential Site contaminants. To accomplish the overall project objective, a RI Work Plan is developed, reviewed and approved prior to the initiation of the investigations. The overall project objective is to complete appropriate Site investigations in support of the preparation of a comprehensive remedial investigative report detailing the nature and extent of contamination at the Site. With this objective met, plans for an Interim Remedial Measure or Remedial Action to address impacted media will be prepared, if necessary. The investigative work outlined herein is based on the contemplated future use of the Site (commercial use) and the existing Site data as developed by C.T. Male and others.

3.2 Scope

The scope of the investigation work is intended to supplement the existing Site data with additional physical and chemical data for determining the chemical parameters of concern within the Site. The potential chemical parameters of concern were selected based on the known or suspected chemicals used at the Site.

The scope of work will include the following:

- Conduct a private well survey to identify the location of private drinking water wells within a ½-mile radius of the Site. This will be accomplished through review of Village and Town records and interviews with appropriate Village, Town, County and New York State Department of Health personnel.

- A total of 13 surface soil samples will be collected within the Site as depicted on the Proposed BCP Media Sampling Locations Map in Figure 2. The samples will be collected from cells created by setting up the Site in a 200 foot by 200 foot grid pattern. All of the samples will be collected at the ground surface from the top two inches of soil beneath any vegetative root zone or pavement surface.

The surface soil samples will be analyzed for the full TCL/TAL groups of compounds and analytes.

Depending on the analytical results of the surface soil sampling, off-site background samples may be collected at the discretion of the DEC and DOH Project Managers to aid in determining if elevated contaminant levels are localized to the project Site or if they are regional in their extent.

- Four (4) exploratory test pits are proposed for the Site with their approximate locations depicted on Figure 2. The test pits will be completed within central portions of the Site in the vicinity of where chlorinated VOCs were detected in groundwater above regulatory guidelines. The test pits will be for the purpose of evaluating for a source area for the chlorinated VOCs. Test pit TP-1 will be advanced in the location where a former dry well is reported to have once existed. The remaining test pits (TP-2, TP-3 and TP-4) will be advanced at hydraulically upgradient locations of the reported dry well to determine the potential for additional contaminant sources within these areas.

  The test pits will be advanced with a backhoe excavator to either the depth attainable by the excavator arm reach (10-12 feet) or to the top of the confining clay unit, whichever is encountered first. The excavated soils will be subjectively assessed employing PID headspace analysis and organoleptic perception. At a minimum, one (1) soil sample will be collected from each of the test pits for laboratory analysis for the full TCL/TAL groups of compounds and analytes.

- Nine (9) exploratory test borings converted to monitoring wells are proposed for the Site with their locations depicted on Figure 2. Four (4) borings/monitoring wells (BMW-16A to BMW-19A) will be for the purpose of further defining the extent of known chlorinated VOCs in groundwater. The remaining borings/monitoring wells (BMW-11A to BMW-15A) will be installed to supplement the existing array of borings/monitoring wells installed during previous investigations which were not advanced to the depth of the confining clay layer (aquitard). Installation of the monitoring wells will also aid to further delineate the direction of groundwater flow across the Site. It is anticipated that the borings/wells will be completed utilizing conventional auger drilling techniques.

Soil and groundwater samples will be collected from each of the test borings and monitoring wells for laboratory analysis. It is anticipated that two soil samples above the water table and one groundwater sample from each monitoring well will be collected for laboratory analysis. The selection of soil samples for laboratory analysis will be biased towards those areas exhibiting elevated photoionization detector (PID) readings or exhibiting contamination based on field observations. One soil sample per boring and groundwater samples will be analyzed for the TCL/TAL groups of compounds and analytes. The second soil sample collected from each boring will be analyzed for the TCL for volatile organic compounds in an attempt to further define both the extent and potential source for chlorinated volatile organic compounds.

- Groundwater samples will be collected from existing monitoring wells MW-2A, MW-3, MW-4A, MW-5A, MW-8A and MW-9A (Fig. 2). The groundwater samples collected from monitoring wells MW-2A, MW-3 and MW-4A will be analyzed for the TCL/TAL groups of compounds and analytes and will be for the purpose of supplementing the analytical data that was collected during previous investigations of the Site. The groundwater samples collected from monitoring wells MW-5A, MW-8A and MW-9A will be analyzed for the TCL for VOCs to further investigate if known contaminants at the hydraulically upgradient Poultney Street Inactive Hazardous Waste site have impacted the project Site.

- Four (4) surface water and four (4) sediment samples (WS/WSW-1 to WS/WSW-4 on Figure 2) are proposed to be collected from wetlands located on the Site. WS/WSW-1 and WS/WSW-2 will be collected from wetlands located on the eastern and southeastern portion of the Site to determine if impacts exist within these areas. WS/WSW-3 will be collected from the wetland located between the Poultney Street Inactive Hazardous Waste site and the area of the project Site where the highest concentrations of chlorinated VOCs were detected in groundwater during previous investigations of the Site. WS/WSW-4 will be collected from the wetland located adjacent north (hydraulically downgradient) to where the highest concentrations of chlorinated VOCs were detected in groundwater during previous investigations of the Site. The surface water and sediment samples will be analyzed for the TCL/TAL groups of compounds and

analytes. The analytical results will be used in part for the Fish and Wildlife Impact analysis discussed below.

- Complete a Fish and Wildlife Impact Analysis (FWIA). The level at which the FWIA is completed will be based on the October 1994 NYSDEC Fish and Wildlife Impact Analysis (FWIA) for Inactive Hazardous Waste Sites. The FWIA manual is written in steps such that decision points are established for determining when the process is complete and further assessment is unnecessary. At a minimum, a partial description of the Site will be prepared to determine if fish and wildlife resources are present at the subject Site. If fish and wildlife resources are present which may be affected by Site-related contaminants, a complete Site description as outlined in Step I of the FWIA will be considered. If no resources are associated with the Site or if there is no potential for contaminant migration to the resources, then only the necessary information to support that conclusion will be provided. If a potential for the migration of contaminants to the resources is identified, further evaluation pursuant to the FWIA will be considered.

- Complete a qualitative human health exposure assessment of the Site in general accordance with NYSDOH guidance. The assessment will consist of characterizing the exposure setting (including the physical environment and potentially exposed human populations), identifying exposure pathways, and evaluating contaminant fate and transport.

- Collect and submit quality control/quality assurance (QA/QC) samples at a ratio of 1 set of QA/QC samples per 20 media samples. The QA/QC set of samples will consist of a blind duplicate sample, a MS/MSD sample, an equipment blank and a trip blank.

- Complete a Data Usability Summary Report (DUSR) of the analytical data developed during this investigation to confirm the data is of adequate quality for subsequent decision making purposes. The DUSR will be completed by an independent data validator.

- Conduct a survey of all the exploratory locations (i.e. surface samples, wetland surface water and sediment samples, test pits, test borings, etc.) and other

pertinent surface features. The locations and features will be amended to the original Site survey conducted for the Old Champlain Mill (see Exhibit 1).

- Conduct a soil gas survey at the sampling locations identified in Figure 2. A total of nine (9) soil gas samples are anticipated to be collected. The intent of the soil gas survey is to evaluate chlorinated VOCs in site soils for future site development activities and to assist in identifying a chlorinated VOC source area. Three (3) soil gas samples will be collected within the footprint of the former building's western concrete slab. Soil gas samples will not be collected beneath the former building's eastern slab, as the slab is elevated with void spaces beneath. Soil gas samples will be collected at locations west (SG-1 and SG-2) and south (SG-3) of the slab. One soil gas sample (SG-8) will be collected beneath the concrete slab of the former power house. Two soil gas samples (SG-6 and SG-7) will be collected from open areas on southern portions of the site. As a note, shallow groundwater conditions (less than 3 feet bgs) exist beneath the site. As such, attempts will be made to collect soil gas samples from open areas of the site at depths one foot above the top of the water table, wherever it exists, and may not be in accordance with NYSDOH sampling guidance.

- A non-emergency Interim Remedial Measure (IRM) will be conducted for the loading and off-site disposal of stockpiled wood that was generated during demolition of the site's former building. The wood will be transported to a facility permitted to accept the wastes being disposed of. Waste characterization sampling will be conducted by the contractor selected to dispose of the wood.

The sampling locations along with the proposed laboratory analyses are presented in the following table.

TABLE 1: Proposed Sampling Locations and Analyses

			PROPOSED ANALYSIS			
Media	**Location**	**Depth Interval (inches)**	**TCL VOCs**	**TCL SVOCS**	**TCL PCBs/PESTs**	**TAL Metals**
Surface Soil	SS-1 to SS-13	0-2	X	X	X	X
Subsurface Soil (Soil Borings)	BMW-11A to BMW-19A	To Be Determined	X	X	X	X
Subsurface Soil (Soil Borings)	BMW-11A to BMW-19A	To Be Determined	X			
Subsurface Soil (Test Pits)	TP-1 to TP-4	To Be Determined	X	X	X	X

			PROPOSED ANALYSIS			
Media	**Location**	**Depth Interval (inches)**	**TCL VOCs**	**TCL SVOCS**	**TCL PCBs/PESTs**	**TAL Metals**
Groundwater (New Wells)	BMW-11A to BMW-19A	NA	X	X	X	X
Groundwater (Existing Wells)	MW-2A	NA	X	X	X	X
	MW-3	NA	X	X	X	X
	MW-4A	NA	X	X	X	X
	MW-5A	NA	X			
	MW-8A	NA	X			
	MW-9A	NA	X			
Wetland Sediment	WS-1 to WS-4	NA	X	X	X	X
Wetland Surface Water	WSW-1 to WSW-4	NA	X	X	X	X
Soil Gas [1]	SG-1 to SG-9	2" Beneath Slab, to be Determined in Open Areas	NA	NA	NA	NA

(1) The soil gas samples will be analyzed for chemical vapors by EPA Method TO-15.

3.3 Rationale

The Site has historically been utilized in association with manufacturing activities. Petroleum fuels, solvents, dyes, paints and heavy metals may have been used in association with past manufacturing uses of the Site. Additionally, public sanitary sewer was reportedly not made available to the Site until 1976.

Based on this information, the following rationale is presented in support of C.T. Male's proposed remedial investigation.

- The private well survey will be conducted to inventory nearby wells so that their locations are known should results of the RI indicate the potential for contaminants in groundwater to migrate off-Site.

- Surface soil sampling is a requirement of the NYSDOH to determine the quality of surface soils at the Site. The surface soil sampling locations are depicted on Figure 2.

  The positioning of the surface soil sampling locations was accomplished by positioning a 200' X 200' foot grid over the entirety of the Site. The surface soil

sampling locations are unbiased and are located as such that the samples will be collected of existing surface soils with the exception of surface soil sampling location SS-10, which will be collected of soils immediately beneath the former building's concrete slab.

- Exploratory test pitting will be conducted in the vicinity of the current chlorinated VOC plume in an attempt to determine a source area(s) for impacts to groundwater by chlorinated VOCs in this area. The test pits will be performed following the completion of the soil gas survey and test borings and associated laboratory results are completed as this data should assist in defining a potential source area.

- The exploratory test borings converted to monitoring wells will be for the purpose of further defining the extent of known chlorinated VOCs in groundwater; to supplement the existing array of borings/monitoring wells which were not advanced to the depth of the confining clay layer (aquitard); and to further delineate the direction of groundwater flow across the Site.

- The collection of groundwater samples from select existing monitoring wells installed during previous investigations will be for the purpose of supplementing the existing analytical data in an attempt to further define if known contaminants at the hydraulically upgradient Poultney Street Inactive Hazardous Waste site have impacted the project Site.

- The collection of surface water and sediment samples from the Site's wetlands will aid in determining if surface water and sediment quality has been impacted by historic Site uses and/or the Poultney Street Inactive Hazardous Waste Site.

- The soil gas survey will be for the purpose of determining the potential for vapor intrusion into future buildings which may be constructed on the site and will aid in identifying a source for present site contaminants.

- The wood stockpile will be disposed of off-site to clear the site of a potential hindrance to the site investigation and because the wood is considered at solid waste that requires proper off-site disposal.

4.0 SUPPLEMENTAL PLANS

4.1 Field Sampling Plan

The field activities for this project will include collection and laboratory analysis of surface soil and subsurface soil samples, surface water samples, sediment samples, and collection and laboratory analysis of groundwater samples from monitoring wells. The procedures relative to implementation of these field activities are presented in the Field Sampling Plan (FSP) in Appendix A, which also conforms to the Quality Assurance/Quality Control Plan. The FSP describes in detail the various methods and techniques to be followed during the completion of the soil, surface water, sediment and groundwater sampling activities, instrument operation and calibration, and chain of custody procedures.

4.2 Quality Assurance/ Quality Control Plan

The Quality Assurance Project Plan (QAPP) describes the quality assurance and quality control procedures to be followed at the time media samples are collected to the time they are analyzed by the environmental analytical laboratory and evaluated by a third party according to the NYSDEC DUSR guidelines. The QAPP is presented in Appendix B of this RI Work Plan.

The QAPP will be utilized and followed by field personnel during the Site investigation activities and media sampling events. It will also be used by the project management team and Quality Assurance Officer to assure the data collected and generated is representative and accurate. The laboratory results will be reported with NYSDEC ASP Category B deliverables, which will be subjected to NYSDEC's Data Usability Summary Report guidelines to determine if the data is valid and usable.

4.3 Health and Safety Plan

A Site specific Health and Safety Plan (HASP) has been prepared for this project to address Site worker health and safety issues. The HASP is presented in Appendix C of this RI Work Plan. Although the plan addresses all of the Site activities to be

performed, the subcontractors to be utilized will be required to develop their own HASP relative to work they will be performing.

4.4 Citizen Participation (CP) Plan

A project specific Citizen Participation Plan (CP Plan) has been developed for this project (Appendix D) in general accordance with Draft DER 10. The objective of the plan is to disseminate information to the public regarding the RI and to involve the public in the decision making process. This is accomplished by keeping the public informed of the investigation through direct mailing, periodic community meetings, pubic notice in local newspapers and other publications, and by having project documents available for review at public accessible repository locations. The CP Plan should be considered an integral part of the Work Plan.

5.0 REPORTING AND SCHEDULE

5.1 Reporting

Upon completion of all of the field activities and receipt of the analytical laboratory data, a RI Report will be prepared and submitted to NYSDEC in a timely manner. The draft report will be prepared in general conformance with the executed BCP. The primary objective of the RI Report is to summarize and discuss the investigation activities completed and any non-conformance to the approved work plan. The report will present the investigation measures employed at the Site, analytical results of samples collected and analyzed, interpretations of the data, overall conclusions regarding the nature and extent of contamination, and recommendations for further investigative work, if any.

5.2 Schedule

It is currently planned to initiate the first field task during the month of January 2009. It is currently anticipated that the field investigation work will be completed within six to eight weeks thereafter. The Draft Remedial Investigation Report would then be submitted on or about May 2009.

6.0 SUBMITTALS

Written communications required by this BCP agreement will be transmitted by United States Postal Service, private courier, or hand delivered to the following individuals. Final documents, as they become available, will also be submitted to the following individuals:

- Alicia J. Thorne, P.E. (two copies)
  Department of Environmental Remediation
  New York State Department of Environmental Conservation
  1115 NYS Route 86 – P.O. Box 296
  Ray Brook, New York 12977-0296

- Ms. Wendy Kuehner, P.E.
  Bureau of Environmental Exposure Investigation
  New York State Department of Health
  Flanigan Square, Room 300
  547 River Street
  Troy, New York 12180-2216

- Mr. Rod Donnelly
  Poultney Street Partners, LLC
  557 Route 23 South
  Wayne, New Jersey 07470

The Department shall review each of the submittals (i.e., work plan, remediation plan and final engineering report) required by the BCP agreement to determine whether it was prepared in accordance with the BCP agreement and generally accepted technical and scientific principles. The Department shall notify the Volunteer (Rod Donnelly) in writing (with copies to C.T. Male) of its approval or disapproval of any submittal.

FIGURES

FIGURE 1

SITE LOCATION MAP

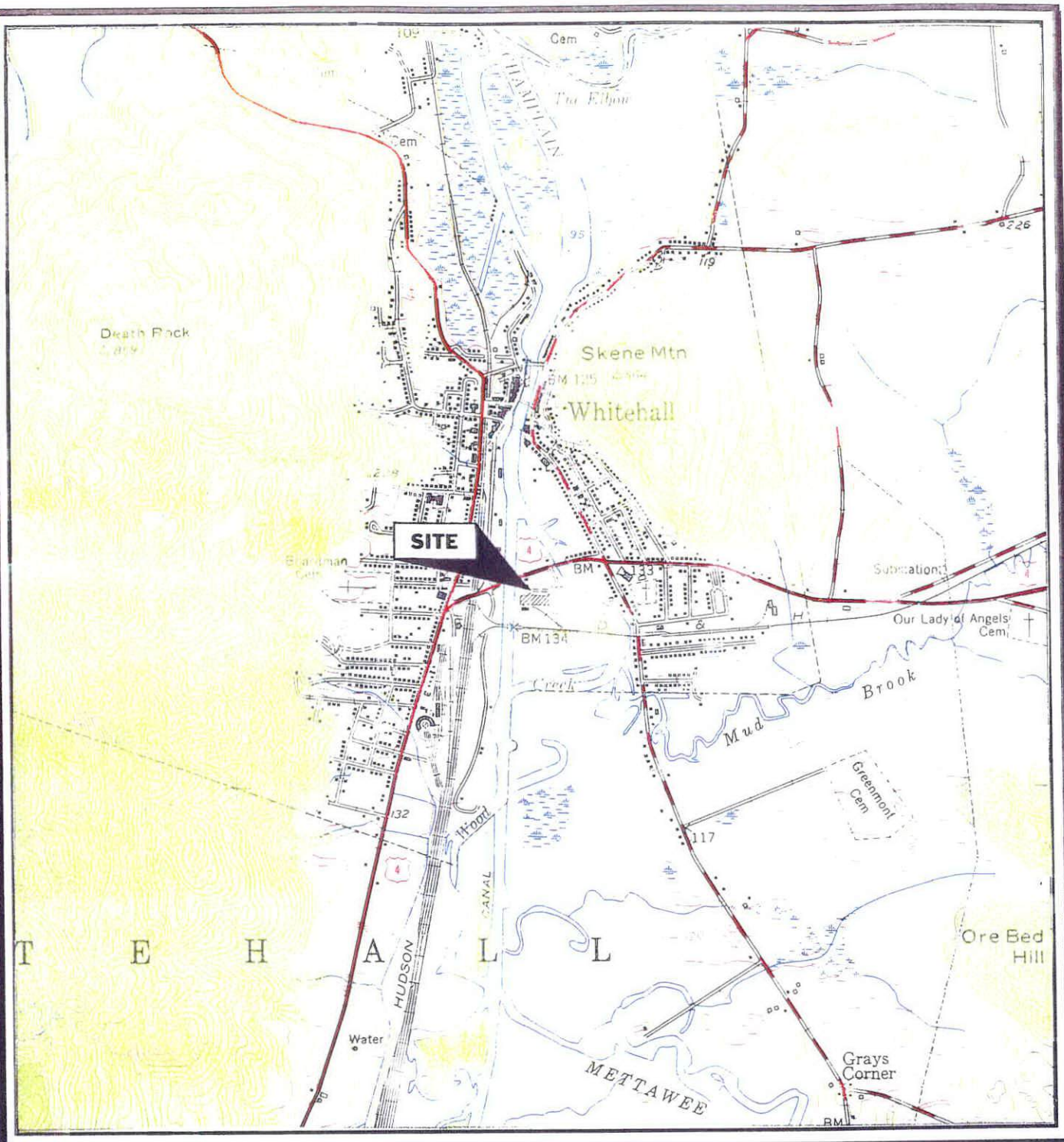

MAP REFERENCE
United States Geological Survey
7.5 Minute Series Topographic Map
Quadrangle: Whitehall, NY
Date: 1950

ENGINEERING
ENVIRONMENTAL SERVICES
SURVEYING
PHONE (518)786-7400
FAX (518) 786-7299

C.T.MALE ASSOCIATES, P.C.
50 CENTURY HILL DRIVE, PO BOX 727, LATHAM, NY 12110

FIGURE 1 SITE LOCATION MAP

OLD CHAMPLAIN MILL

VILLAGE OF WHITEHALL	WASHINGTON COUNTY, NY
SCALE: 1:24,000	
DRAFTER: ASG	
PROJECT No.	

ATTACHMENT C

Figure 2, Proposed BCP Sampling Locations Map

XREFS: NONE

PROJECT NUMBER:06.6448

CAD DWG. FILE NAME: FIGURE 2-BCP LOC.DWG

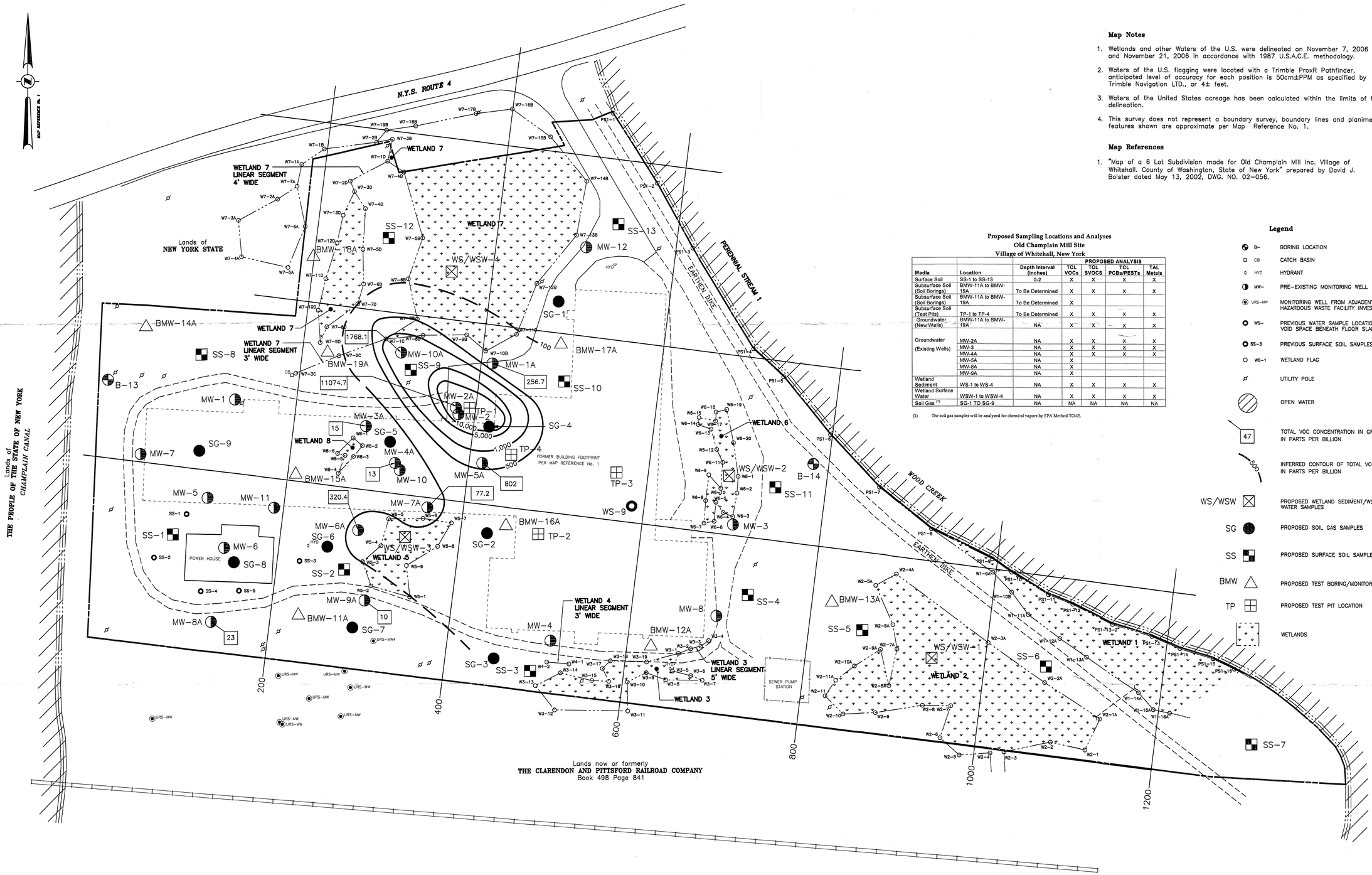

Map Notes

1. Wetlands and other Waters of the U.S. were delineated on November 7, 2006 and November 21, 2006 in accordance with 1987 U.S.A.C.E. methodology.
2. Waters of the U.S. flagging were located with a Trimble ProxR Pathfinder, anticipated level of accuracy for each position is 50cm±PPM as specified by Trimble Navigation LTD., or 4± feet.
3. Waters of the United States acreage has been calculated within the limits of the delineation.
4. This survey does not represent a boundary survey, boundary lines and planimetric features shown are approximate per Map Reference No. 1.

Map References

1. "Map of a 6 Lot Subdivision made for Old Champlain Mill Inc. Village of Whitehall. County of Washington, State of New York" prepared by David J. Bolster dated May 13, 2002, DWG. NO. 02-056.

Proposed Sampling Locations and Analyses
Old Champlain Mill Site
Village of Whitehall, New York

			PROPOSED ANALYSIS			
Media	Location	Depth Interval (inches)	TCL VOCs	TCL SVOCS	TCL PCBs/PESTs	TAL Metals
Surface Soil	SS-1 to SS-13	0-2	X	X	X	X
Subsurface Soil (Soil Borings)	BMW-11A to BMW-19A	To Be Determined	X	X	X	X
Subsurface Soil (Soil Borings)	BMW-11A to BMW-19A	To Be Determined	X			
Subsurface Soil (Test Pits)	TP-1 to TP-4	To Be Determined	X	X	X	X
Groundwater (New Wells)	BMW-11A to BMW-19A	NA	X	X	X	X
Groundwater (Existing Wells)	MW-2A	NA	X	X	X	X
	MW-3	NA	X	X	X	X
	MW-4A	NA	X	X	X	X
	MW-5A	NA	X			
	MW-8A	NA	X			
	MW-9A	NA	X			
Wetland Sediment	WS-1 to WS-4	NA	X	X	X	X
Wetland Surface Water	WSW-1 to WSW-4	NA	X	X	X	X
Soil Gas (1)	SG-1 TO SG-9	NA	NA	NA	NA	NA

(1) The soil gas samples will be analyzed for chemical vapors by EPA Method TO-15.

Legend

- B– BORING LOCATION
- CB CATCH BASIN
- HYD HYDRANT
- MW– PRE-EXISTING MONITORING WELL
- URS-MW MONITORING WELL FROM ADJACENT HAZARDOUS WASTE FACILITY INVESTIGATION
- WS– PREVIOUS WATER SAMPLE LOCATION OF STAGNANT WATER IN VOID SPACE BENEATH FLOOR SLAB
- SS-3 PREVIOUS SURFACE SOIL SAMPLES COLLECTED BY C.T. MALE IN 2007
- WS-1 WETLAND FLAG
- UTILITY POLE
- OPEN WATER
- 47 TOTAL VOC CONCENTRATION IN GROUNDWATER IN PARTS PER BILLION
- 500 INFERRED CONTOUR OF TOTAL VOCs IN GROUNDWATER IN PARTS PER BILLION
- WS/WSW PROPOSED WETLAND SEDIMENT/WETLAND SURFACE WATER SAMPLES
- SG PROPOSED SOIL GAS SAMPLES
- SS PROPOSED SURFACE SOIL SAMPLES
- BMW PROPOSED TEST BORING/MONITORING WELLS
- TP PROPOSED TEST PIT LOCATION
- WETLANDS

BAR SCALE
50 0 25 50 100
1 inch = 50 ft.

DATE	REVISIONS RECORD/DESCRIPTION	DRAFTER	CHECK	APPR.
	1			
	2			
	3			
	4			
	5			
	6			
	7			
	8			
	9			

UNAUTHORIZED ALTERATION OR ADDITION TO THIS DOCUMENT IS A VIOLATION OF SECTION 7209 SUBDIVISION 2 OF THE NEW YORK STATE EDUCATION LAW.

© 2006 C.T. MALE ASSOCIATES, P.C.

APPROVED:
DRAFTED : SMW
CHECKED : DGD
PROJ. NO: 06.6448
SCALE : 1"=50'
DATE : JUNE 21, 2007

FIGURE 2
PROPOSED BCP MEDIA SAMPLING LOCATIONS MAP
OLD CHAMPLAIN MILL SITE

VILLAGE OF WHITEHALL — WASHINGTON COUNTY, NEW YORK

C.T. MALE ASSOCIATES, P.C.
50 CENTURY HILL DRIVE, P.O. BOX 727, LATHAM, NY 12110
518.786.7400 ■ FAX 518.786.7299
ARCHITECTURE & BUILDING SYSTEMS ENGINEERING ■ CIVIL ENGINEERING
ENVIRONMENTAL SERVICES ■ SURVEY & LAND INFORMATION SERVICES

SHEET 1 OF 1
DWG. NO: 08-611

ONLY COPIES OF THIS MAP SIGNED IN RED INK AND EMBOSSED WITH THE SEAL OF AN OFFICER OF C.T. MALE ASSOCIATES, P.C. OR A DESIGNATED REPRESENTATIVE SHALL BE CONSIDERED TO BE A VALID TRUE COPY.

CAD DWG. FILE NAME:FIGURE 2-BCP LOC.DWG

APPENDIX A

FIELD SAMPLING PLAN
OLD CHAMPLAIN MILL SITE
VILLAGE OF WHITEHALL
WASHINGTON COUNTY, NEW YORK

FIELD SAMPLING PLAN
OLD CHAMPLAIN MILL SITE
VILLAGE OF WHITEHALL
WASHINGTON COUNTY, NEW YORK

TABLE OF CONTENTS

		Page
1.0	INTRODUCTION	1
2.0	SAMPLING LOCATIONS AND FREQUENCY	3
3.0	TEST PIT, BORING & MONITORING WELL INSTALLATIONS	4
3.1	Test Pits	4
3.2	Test Borings and Monitoring Well Installations	4
3.3	Surface Soil Sampling	4
3.4	Observation of Test Pits, Drilling Operations, Monitoring Well Installations and Site Wide Surface Soil Sampling Locations	5
3.5	Sampling of Test Pits	5
3.6	Drilling and Sampling of Overburden	6
3.7	Soil Sampling and Soil Field Screening Procedures	7
3.8	Monitoring Well Installation	9
3.9	Monitoring Well Development	10
3.10	Decontamination of Drilling and Sampling Equipment	10
3.11	Decontamination of Excavating Equipment	11
4.0	GROUNDWATER SAMPLING PROCEDURES	12
4.1	General	12
4.2	Preparation for Sampling	13
4.3	Measuring the Water Level	14
4.4	Well Development Procedures	15
4.5	Sample Collection	16
4.6	Field Analyses	18
5.0	SOIL SAMPLING PROCEDURES	19
5.1	Headspace Analysis	19
5.2	Analytical Soil Sampling	19
6.0	SURFACE WATER SAMPLING	21

7.0 SEDIMENT SAMPLING 22

8.0 SOIL GAS SURVEY 23
- 8.1 Sample Point Installation 23
  - 8.1.1 Sub-Slab Sample Point Installation 23
  - 8.1.2 Ground Surface Sample Point Installation 24
- 8.2 Sample Collection 26

9.0 QUALITY CONTROL DURING SAMPLING IN THE FIELD 27

10.0 FIELD INSTRUMENTATION OPERATING PROCEDURES 29
- 10.1 General 29
- 10.2 Photoionization Detector Meter 29
- 10.3 Temperature, PH and Specific Conductivity Meter 30
  - 10.3.1 General 30
  - 10.3.2 pH 30
  - 10.3.3 Specific Conductivity 30
- 10.4 Turbidity Meter 31
- 10.5 Dust Monitors 31

11.0 SAMPLE HANDLING AND CHAIN OF CUSTODY PROCEDURES 32

12.0 WATER LEVEL MEASUREMENT PROCEDURES 33

FIGURES

Figure 1: Typical Overburden Monitoring Well Diagram

APPENDICES:

Appendix A: QA/QC Forms and Field Report Forms

1.0 INTRODUCTION

This document is the Field Sampling Plan (FSP) for the site investigation to be conducted at the Old Champlain Mill site ("the site") located in the Village of Whitehall, Washington County, New York. It has been developed in accordance with the RI Work Plan dated October 2007 as prepared by C.T. Male Associates, P.C. A description of the property, available background information, objectives, and the proposed scope of work, are presented in the referenced RI Work Plan.

This FSP is a supplement to the RI Work Plan in that it presents the standard field sampling and data gathering procedures to be followed during implementation of the field activity portion of the scope of work. This plan addresses sampling locations and frequencies, drilling methods and installation of monitoring wells, test borings, exploratory test pits, vapor intrusion methodologies, decontamination procedures, sampling procedures, field screening and testing procedures, field instrumentation operating procedures, field measurements, sample handling and chain of custody procedures, and water level measurement procedures. The applicable portions of the RI Work Plan that coincide with the FSP will be provided to, and followed by, the field team. This FSP is intended to be applicable to field sampling activities conducted by C.T. Male and its subcontractors.

The FSP forms an integral part of the Quality Assurance Project Plan (QAPP). The field sampling and data gathering procedures presented in the FSP are incorporated into the QAPP by reference. The FSP and the QAPP document the laboratory quality assurance/quality control procedures to be followed during analysis of samples collected in the field so that valid data of a known quality is generated.

The FSP has been prepared, in part, in general accordance with the following USEPA and NYSDEC guidance documents:

- Guidance for Conducting Remedial Investigations and Feasibility Studies Under CERCLA, EPA/540/G-89/004, USEPA, October 1988.
- A Compendium of Superfund Field Operations Methods, EPA/540/P-87/001, USEPA, December 1987.

- Draft DER-10, Technical Guidance for Site Investigation and Remediation, NYSDEC, December 2002.
- 6 NYCRR Part 375 Environmental Remediation Programs Subparts 375-1 to 375-4 & 375-6, Effective December 14, 2006.

2.0 SAMPLING LOCATIONS AND FREQUENCY

Sampling will be performed for volatile organic vapor screening, subjective media assessment, laboratory analyses, and for geologic and hydrogeologic characterization of the project site. The environmental media to be sampled includes:

- Surface Soil,
- Wetland Surface Water and Sediments,
- Subsurface Soil,
- Groundwater, and
- Soil Gas

Soil and groundwater sampling will be performed as part of the surface soil, test boring subsurface investigation, monitoring well sampling, and the exploratory test pits. Surface water and sediments will be sampled from four (4) on-site wetlands. Soil gas sampling will be conducted as part of a vapor intrusion survey for the site. The sampling locations and proposed frequencies are discussed in the appropriate work task section of the RI Work Plan.

3.0 TEST PIT, BORING & MONITORING WELL INSTALLATIONS

3.1 Test Pits

Test pits will be completed to evaluate the potential source(s) for known contaminants in the site's groundwater and to further examine the site's subsurface profile. Four (4) test pits are planned to be completed on the site.

3.2 Test Borings and Monitoring Well Installations

Exploratory test borings will be advanced throughout the site to further determine the nature and extent of known contaminants in underlying soils and groundwater. Eight (8) borings are anticipated for the investigation and their locations may be adjusted upon completion of the test pitting investigation. The borings/monitoring wells will be selected to some degree such that their locations can be used to further define the direction of groundwater flow within the site, and to further assess the soil and groundwater conditions and quality beneath the site.

3.3 Surface Soil Sampling

Surface soil samples are anticipated to be collected within the site. The samples will be collected across the site at unbiased locations. The unbiased samples will be collected from cells created by setting up the site in a grid pattern. Background samples (if required) will be collected from NYSDEC approved, yet to be determined locations. The surface soil samples will be analyzed for the full TCL/TAL groups of compounds and analytes.

The samples will be collected at grade if the sampling point does not lie within a vegetated location (i.e. grass). At locations where there is vegetation, the soil will be removed to a point below the root zone and the surficial soil sample will be collected to a depth of two (2) inches below the root zone. In areas where the existing building slab exists, the sample will be collected of soils immediately beneath the slab.

3.4 Observation of Test Pits, Drilling Operations, Monitoring Well Installations and Site Wide Surface Soil Sampling Locations

All drilling, test pitting and other associated field work involved in the site investigation to be performed by C.T. Male subcontractors will be observed by a full-time, on-site, C.T. Male Associates, P.C. representative. This representative will be responsible for the collection of soil samples, field screening of soil samples, recording of drilling and sampling data, recording of groundwater data, deciding on the final drilling depths and screened intervals (with input from the project manager, hydrogeologist or engineer), recording the monitoring well construction procedures, and monitoring the decontamination procedures.

Field system audits will be conducted and field reports will be prepared that document the daily activities and their conformance to the work plan (described further in Sections 10.1 and 13.0 of the QAPP). A copy of the forms to be utilized by the applicable field team personnel as part of the field quality assurance/quality control (QA/QC) procedures are presented in Appendix A of this FSP.

The project manager will be kept informed of the progress of work and any problems encountered during the field investigations so that the appropriate corrective action can be implemented.

3.5 Sampling of Test Pits

A tire-mounted backhoe will be utilized to complete the test pits. Excavated soils will be visually classified and screened via organoleptic perception (sight and smell), and with a photo ionization detector (PID). Soils exhibiting evidence of contamination employing the above methods will be subjected to laboratory analyses for the full TCL/TAL groups of compounds and analytes.

The soils will be visually classified in the field in general accordance with the Unified Soil Classification System and ASTM D 2488, Standard Practice for Description and Identification of Soils. The soil descriptions may include matrix and clast descriptions, moisture content, color, appearance, odor, behavior of the material and other pertinent observations. This information will be recorded on a test pit log form along with the test pit identification, date started and completed, sampling intervals, and depth of first

groundwater encountered, if present. A blank copy of a Test Pit Log Form is enclosed in Appendix A.

3.6 Drilling and Sampling of Overburden

The test boreholes will be advanced through the overburden using hollow-stem augers having a minimum 4.25 inch inside diameter (ID). Continuous (every two feet) soil samples will be collected in general accordance with the procedures of ASTM D-1586, Standard Method for Penetration Test and Split Barrel Sampling of Soils. A standard split barrel sampler, which is 24-inches long and 2-inches in diameter, will be used for sampling.

All soils will be visually classified in the field using the Unified Soil Classification System in general accordance with ASTM D-2488, Standard Practice for Description and Identification of Soils. The soil description may include matrix and clast descriptions, moisture content, color, appearance, odor, behavior of the material and any other pertinent observations. This information will be recorded on a test boring log form along with the boring identification and elevation, date started and completed, sampling intervals, standard penetration values, length of recovered sample and depth of first groundwater encountered. During the drilling a photoionization detector (PID) meter will be used to monitor the volatile organic vapors exiting the borehole and soil cuttings and of all recovered subsurface samples. All of these visual observations and field measurements will be recorded on the Test Boring Log. A blank copy of a Test Boring Log form is enclosed in Appendix A.

In the event a borehole is not converted into a monitoring well, it will be abandoned by filling it with the cuttings from that borehole and the balance needed to fill the borehole will be filled with a cement/bentonite grout mixture (approximately 20 to 1 ratio). Additional soil cuttings from borings converted to monitoring wells will remain on-site, unless directed otherwise.

Based on known subsurface conditions obtained through previous site investigations, the soil borings will be advanced to depths of approximately 20 to 25 feet below existing grades. This exploration depth should be sufficient for encountering groundwater, which is expected to be within 5 feet from grade.

3.7 Soil Sampling and Soil Field Screening Procedures

The specific soil sampling procedures that will be followed for test pits and site wide surface soil samples include the following:

1. A cleaned (per Section 3.10) stainless steel trowel will be used by the onsite sampling personnel. Clean disposable gloves will be worn when handling the trowel.

2. A discrete soil sample will be collected by advancing the bucket of the excavator or hand trowel to a pre-determined depth, based on conditions found at each location. The onsite sampling personnel will collect the test pit soil sample from the bucket or the surface soil sample with the cleaned stainless steel trowel or a new pair of disposable gloves.

3. For samples to be collected for laboratory analysis, the sample container label will be completed with the sample location (test pit nomenclature), sample interval, sampler's initials, date, and time. The client, project name, site location, matrix, sample type (grab/composite) and laboratory analyses to be performed will also be recorded on the sample label.

4. Immediately upon collecting the soil sample, the sample will be put directly into pre-cleaned glass jars using a clean (per Section 3.10) stainless steel trowel, and the jars will be sealed. Sampling personnel will wear a new pair of disposable gloves for each sample interval retrieved. A portion of the remaining soil will be placed in a new plastic zip lock bag, not more than one-half full, and sealed. This bag sample will be for head space analysis screening in the field for volatile organic compounds (VOCs) using a PID meter.

5. The soil sample will be classified and the test pit log completed as described in Section 3.5.

6. The sampling equipment will be decontaminated per Section 3.10.

The specific soil sampling procedures that will be followed for the test borings include the following:

1. A cleaned (per Section 3.10) split-spoon sampler will be given to the driller or driller's assistant who will attach it to the sampling rod. Clean disposable gloves will be worn when handling the split-spoon sampler.

2. A soil sample will be collected by advancing the sampler with a 140 pound drive hammer pushing the split-spoon sampler the desired two (2) foot sampling interval per procedure ASTM D-1586.

3. For samples to be collected for laboratory analysis, the sample container label will be completed with the sample location (boring nomenclature), sample interval, sampler's initials, date, and time. The client, project name, site location, matrix, sample type (grab/composite) and laboratory analyses to be performed will also be recorded on the sample label.

4. The recovered split-spoon sampler will be placed on clean polyethylene sheeting. The end cap will be unscrewed and the sampling spoon opened to expose the sample.

5. Immediately upon opening the sampling spoon, a portion of the soil sample will be retrieved and put directly into pre-cleaned glass jars using a clean (per Section 3.10) stainless steel trowel, scapula, or a new pair of disposable gloves, and the jars will be sealed. Sampling personnel will wear a new pair of disposable gloves for each sample interval retrieved from the sampling spoon. A portion of the remaining soil will be placed in a new plastic zip lock bag, not more than one-half full, and sealed. This sample will be for head space analysis screening in the field for volatile organic compounds (VOCs) using a PID meter.

6. The soil samples will be classified and the test boring log completed as described in Sections 3.3 and 3.4.

7. The sampling equipment will be decontaminated per Section 3.10.

All of the split-spoon soil samples, where sufficient sample is recovered to generate a headspace sample, will be screened in the field with a PID meter on a daily basis. The sample will be allowed to equilibrate to ambient temperature; the plastic bag will be shaken for 30 seconds and allowed to equilibrate for 1 minute; the bag will be pierced with the tip of the PID meter; and the reading taken. The readings will be recorded on a

C.T. Male Associates, P.C. Organic Vapor Headspace Analysis Log form. A blank copy is enclosed in Appendix A. The PID meter calibration procedures are discussed in Section 10.0.

At completion of the field screening of soil samples and soil classification, the recovered soil samples will be retained for no more than 90 days.

3.8 Monitoring Well Installation

Overburden monitoring wells will be installed within the hollow-stem augers. Once the hollow-stem augers are advanced to the desired depth, 2-inch diameter monitoring wells with slotted screens will be installed in accordance with standard practices. Typical overburden well construction details are shown in Figure 1. All wells will be constructed of flush-threaded joint, Schedule 40 PVC riser pipe, machine slotted screen, bottom plug, and cap. The screens will be 0.010-inch slotted and generally ten feet in length.

Each well will be assembled as it is lowered into the borehole. The annulus around the well screen will be packed with clean silica sand to a maximum of two feet above the screen. Additionally, a one-half foot choke of fine-grained sand will be placed on top of the sand pack to preclude the migration of the seal material into the sand pack. A minimum one-foot bentonite seal will be installed in the annulus. The seal will consist of bentonite pellets/chips or slurry. The remainder of the annulus will be filled with cement/bentonite grout (ratio of 20 to 1). A steel monitoring well guard pipe or curb box will be set over each well head and cemented in place. A positive grade will be constructed of cement around the well to divert surface water away from the well. A permanent mark will be made at the top of the PVC riser to serve as a datum for all subsequent static water level measurements. Upon completion, a locking gripper well cap will be installed and locked. Monitoring well depths, and screen lengths and depths will be calculated by the environmental scientist/geologist by maintaining accurate measurements of screen and casing placed in the borehole. A Monitoring Well Construction Log form (Figure 1) will be completed that documents the well materials and depths.

3.9 Monitoring Well Development

Well development of the monitoring wells will be necessary to remove sediments (silt, clay, and fine sand) from the well screen, well bottom, sand pack, and formation. This will increase the hydraulic conductivity immediately around the well, thus increasing the well yield for sampling. No well will be developed sooner than 24 hours after installation. This will assure that the grout or bentonite seal will be set before increasing the flow to the well. The wells will be developed by surging, bailing, and pumping. Reasonable means will be taken to develop the wells to a turbidity of 50 NTU's or less, however, if the site soils are composed of a high percentage of silt and/or clay, a turbidity value of 50 NTU or less will not likely be achieved.

The monitoring wells will be developed utilizing surge and purge methods. The back and forth flow created within the screened interval dislodges fine sediments in the formation, sand pack, and screen, suspending fines so they can be removed.

The wells will be surged a minimum of 5 well volumes using a dedicated 3-foot long, 1.5-inch diameter polyethylene bailer attached to a 1/8-inch, dedicated, nylon or polypropylene rope. The surging will be accomplished by rapidly raising and lowering the bailer within the screened interval. The bailer will then be used to obtain a water sample to check the color, turbidity, odor, and sand and silt content of the well water during and after the development efforts.

The bailing rope and polyethylene bailer will be dedicated to each well to prevent cross-contamination during development. The dedicated bailer can be utilized in the future when the wells are purged for groundwater sampling.

All of the development water from the monitoring wells will be stored in 55-gallon drums pending analytical results for groundwater sampling.

3.10 Decontamination of Drilling and Sampling Equipment

Drilling equipment including augers, rods, samplers, tools, drill unit and any piece of equipment that can come in contact with the formation will be cleaned with a high temperature/high pressure steam cleaner prior to the start of work and between each boring to prevent cross-contamination between borings. The equipment will also be

cleaned using the same procedure at completion of the work (before leaving the site) to prevent any contamination from leaving the site.

The sampling equipment including split-spoon samplers and stainless steel trowels, etc., will be cleaned prior to use, in between each boring and at completion of the work by similar process described above. Between each sample interval at the same boring location the sampling equipment will be cleaned using the following procedure:

1. Remove any excess soil remaining on the split-spoon sampler.

2. Prepare a solution of tap water and non-phosphate detergent in a wash bucket, and scrub the equipment with a brush to remove any adhering particles.

3. Rinse the equipment with copious amounts of tap water.

4. Place clean equipment on clean polyethylene sheeting.

5. Reassemble the clean split-spoon sampler.

6. New disposable gloves will be worn when cleaning and handling the equipment to avoid contamination.

7. The water in the wash and rinse buckets will be changed frequently to avoid cross contamination.

The decontamination rinse water will be collected and placed in 55-gallon drums and stored at the project site until laboratory analyses results of the soil and groundwater samples indicates the proper method of treatment or disposal. Disposable protective clothing such as tyvek suits, gloves, etc. will be placed in a garbage bag and disposed of as a solid waste. The personnel decontamination procedures are detailed in Section 10.0 of the Site Specific Health and Safety Plan.

3.11 Decontamination of Excavating Equipment

The excavating equipment (bucket only) will be decontaminated with a high pressure wash and rinse. The equipment will be washed over a temporary decontamination pad which will collect the wash and rinse water. A pumping device may be used to transfer the liquids into 55-gallon drums.

4.0 GROUNDWATER SAMPLING PROCEDURES

4.1 General

During groundwater sampling, it is important to follow strict acceptable protocol during the collection and transportation of groundwater samples. This minimizes the potential for sample variation from well to well due to sampling and transportation techniques. Quality control measures will be instituted as discussed in Section 9.0 of this document and the QAPP as a check on the procedures being utilized so that the quality of the data can be assessed. The groundwater samples from the newly installed monitoring wells will be analyzed in the laboratory for Target Compound List (TCL) volatile and semi-volatile organic compounds, PCBs and Pesticides and the Target Analyte List (TAL) metals (unfiltered) by standard methods following the QA/QC procedures outlined in the QAPP. The groundwater samples from the existing wells will be analyzed in the laboratory for TCL volatile organic compounds following the QA/QC procedures outlined in the QAPP.

Prior to sampling, the water level in the well will be measured, and the well will be purged and allowed to recover to near static conditions. Groundwater samples will be taken for field and laboratory analyses. The field parameters to be determined are pH, temperature, turbidity and specific conductance. All pertinent groundwater sampling information will be recorded on a C.T. Male Groundwater Services Field Log. A separate log will be completed for each monitoring well sampled. Logs will be dated and signed by the person making the entries and will be submitted to the project manager for inclusion in the project files. The following information will be included on the log forms:

1. Project name and location.
2. Date and times.
3. Monitoring well identification number.
4. Bailer type and identification number, if any.
5. Well development data.
6. Physical characteristics of samples.

7. Field analyses results.
8. Name of sampler(s).
9. Recovery times of wells.
10. Any additional observations/information.

An Environmental Services Field Log will also be completed for the groundwater sampling event. A blank copy of the referenced forms are enclosed in Appendix A.

4.2 Preparation for Sampling

Prior to groundwater sampling, the equipment and containers needed for sampling will be collected and prepared. If non-dedicated stainless steel sampling equipment is used it will be cleaned, as described below prior to use, in between each use, and at completion of use:

- Scrub with tap water and non-phosphate detergent,
- rinse with tap water,
- rinse with 10% HNO_3, ultrapure, if metal analyses are to be performed,
- rinse with tap water,
- rinse with methanol,
- rinse with deionized water,
- air dry, and
- wrap in aluminum foil.

In lieu of stainless steel sampling equipment, new disposable polyethylene bailers will be utilized to facilitate the groundwater sampling. New disposable gloves will be worn during equipment cleaning and decontamination, and handling of the media being sampled. Only new pre-cleaned laboratory provided sample containers and caps will be used for sample collection/analyses. All sample containers required to be fixed with a preservative, will be prepared by the laboratory before each sampling event. The container type, cap type and preservative requirements for the analytical parameters (water) to be analyzed are summarized in Table 1 on the following page.

TABLE 1
Analytical Requirements for Containers and Preservatives for Water Sampling

PARAMETER	CONTAINER	TOP	PRESERVATION	COMMENTS
VOCs per EPA 8260 (Water)	3-40 ml vials (preserved)	Septum	HCl to pH<2 Cool, 4°C	NA
Semi-VOCs, PCBs and Pesticides (Water)	3-1L amber Glass	Teflon	0.008% $Na_2S_2O_3$ Cool, 4°C	Store in dark.
Metals per EPA 6010/7000 (Water)	500 ml Plastic	Poly	HNO_3 to pH <2	NA

Sample labels will be prepared prior to sampling and affixed to the sample containers. The client, project name, site location, matrix, sample type (grab/composite), preservative and laboratory analyses to be performed will be recorded on the sample labels by the laboratory. The sample location (i.e., monitoring well ID), date, sampler's initials and time will be filled out on the sample label at the time of sampling.

Upon arrival at the sampling location, the well will be observed for any damage, the cover of the guard pipe or curb box will be cleared of any debris and unlocked or unbolted. Clean polyethylene sheeting will be placed adjacent to the well to protect purging and sampling equipment from contamination. The cap and top of the well casing will be wiped with a clean cloth and then the cap removed. A PID reading will be collected when the well cap is removed. The water level in the well will then be measured.

4.3 Measuring the Water Level

Prior to sampling and purging, static water heights will be measured using a water level indicator to determine the standing water column height. A full set of water levels will be collected from all wells prior to initiating the water sampling. The water column height and depth of the well are used to calculate the well water volume. Non-vented well caps will be removed for a period of ten minutes to allow the water column to reach static conditions prior to taking the water level measurements. Refer to Section 12.1 for a detailed description of water level measurement procedures.

4.4 Well Development Procedures

Prior to sampling of the groundwater, it is necessary to purge the wells. Purging of the wells allows for a representative sample to be taken from the screened interval of the well by removing stagnant water from the well.

Three to five well volumes of the standing water will be removed from the well. The volume of standing water in the well is calculated by subtracting the water level height from the well depth measurement, and multiplying this value by a conversion factor. The conversion factor is based on the well casing diameter and converts linear feet of water into gallons. In cases where the water recharges at a slow rate, the well will be purged dry when possible.

New dedicated polyethylene bailers or pre-cleaned bottom filling stainless steel bailers with Teflon™ ball check valve will be used to purge the wells. Bailers will be dedicated to an individual well during sampling events. If an alternative purging method (peristaltic pump) is used it will be documented on the Groundwater Services Field Log form. A clean, new piece of polypropylene rope will be used at each individual well and will be properly discarded after each sampling event. Physical observations of the purge water will be noted and recorded in the groundwater sampling log. The actual quantity of purge water removed from the well will be measured by using a bucket graduated in gallons, and the volume will be recorded. Once purging is complete, the bailer or alternate purging device will be removed from the well and placed on the clean polyethylene sheeting or on the aluminum foil it was wrapped in, adjacent to the well, until completion of the groundwater sampling.

All of the purge water from the monitoring wells will be discharged to the ground around the well unless the water exhibits an unusual odor, or sheens or films are noted during development. If deemed necessary, the development water will be collected and placed in 55-gallon drums and stored at the project site until laboratory analyses results of the soil and groundwater samples indicates the proper method of treatment or disposal.

4.5 Sample Collection

Prior to sample collection, the wells will be allowed to recover to at least 80% of their initial static water level. Slow recharging wells will be allowed to recover for a period of four hours before sampling. Recovery times and water depths will be recorded on the Groundwater Services Field Log form.

The sample will be collected using a new disposable bailer or a pre-cleaned stainless steel bailer that was dedicated to the well for the sampling event. In the event it becomes necessary to use a bailer at more than one location, the bailer will be field cleaned according to the decontamination protocol presented in Section 4.2, and the field decontamination techniques will be verified through the use of equipment/field blanks. An equipment/field blank will be taken from a distilled water rinse from the decontaminated sampling device prior to sampling.

A new pair of disposable surgical gloves will be used to handle the sampling equipment and containers at each sampling location. Only non-powdered sampling gloves will be used during sampling for metal analytes.

The stainless steel bailer or disposable bailer will be lowered slowly into the well to minimize the aeration of the samples. Volatile samples will be collected first, followed by field parameters and then in decreasing order of the volatility of the parameters being analyzed for. The samples will be collected employing low flow sampling techniques and the samples will be unfiltered.

In order to insure the integrity of samples, sample containers must be filled properly. The following sections contain general procedures for sampling and specific procedures for sampling volatile organic compounds. Care shall be taken in sampling to assure that analytical results represent the actual sample composition.

A. General Sampling

1. Don't remove caps until the actual sampling time and only long enough to fill the container.
2. Identify every container by filling out the label with all the required data.
3. Fill all containers completely.

4. Some bottles may contain a fixative which should not be rinsed out of the bottle. Read the sample label treatment and fixative section to determine if a preservative/fixative has been added. Be careful not to contact fixatives with skin or clothing. If this should occur, rinse liberally with water.

5. After the sample is taken, wipe the container with a paper towel and place the container in a cooler with ice packs, to maintain the cooler at 4°C.

6. Complete the Groundwater Services Field Log and Chain of Custody Record forms.

7. Deliver or ship samples to the laboratory within 48 hours.

B. Sampling for Volatile Organic Compounds

1. Samples are to be collected in glass containers having a total volume in excess of 40 ml with open-top screw caps with Teflon-faced silicone septa. Sample containers will have hydrochloric acid (HCL) added to them as a preservative. This preservative must not be rinsed out.

2. A transport blank should be prepared from organic-free water and carried through the sampling and handling procedure. It will serve as a check for transport and container contamination.

3. Fill sample container slowly to minimize aeration of the sample, until a curved meniscus is observed over the bottle rim.

4. Float the septa, Teflon™ side down on the liquid meniscus. The Teflon™ side is the thin layer observed when viewing the septum from the side horizontally.

5. Carefully set on septum, expelling excess sample and being careful to exclude air. Then screw open-top cap down.

6. Check for a good seal by inverting bottle and tapping and checking for visible air bubbles.

7. If air bubbles are visible or there is a bad seal, remove cap and add additional sample and repeat steps 4 to 6.

8. Groundwater samples for volatile analysis will be taken in triplicate.

At completion of the sampling the well cap will be replaced; and the cover to the protective guard pipe will be bolted in place. The rope, gloves, and sheeting will be properly disposed of, and the stainless steel sampling equipment, if used, decontaminated and placed in a clean plastic bag. The polyethylene bailer will be hung in the well using either a simple polyethylene string or stainless steel wire harness.

4.6 Field Analyses

The field analyses of groundwater include pH, temperature, specific conductivity and turbidity. The field analyses will be measured in the field since these constituents change during storage. A minimum 40 ml sample will be collected and placed in clean unpreserved polyethylene or glass containers for analysis. The containers will be covered if the measurements are not recorded immediately.

The pH, temperature and conductivity of a sample are measured with a portable unit capable of measuring all three parameters concurrently. The portable unit automatically adjusts to compensate for the temperature of the sample. The turbidity of a sample is measured with a separate portable unit. The pH, temperature, conductivity and turbidity will be recorded on the Groundwater Services Field Log. These units will be calibrated to known standards prior to the start of field activities. Measurement and operating procedures for these field analyses are presented in Section 10.0 of this FSP.

5.0 SOIL SAMPLING PROCEDURES

5.1 Headspace Analysis

The soil samples collected from the test boring investigation and test pit excavations will be screened for the presence of petroleum/chemical related hydrocarbons by headspace analysis utilizing a photoionization detector (PID), to subjectively assess the recovered soil samples for evidence of petroleum/chemical contamination. The sample is transferred from the excavation or split-spoon sampler into a zip lock bag, sealed, shaken and then allowed to sit for several minutes. Once the sample has had a chance to sit or "volatilize," the vapor space inside the bag will be analyzed by inserting the tip of the PID through the bag, as described in Section 3.7. PID readings of the soil samples will be conducted in a warmed vehicle should the field work be performed during colder weather.

5.2 Analytical Soil Sampling

Select recovered soil samples will be subjected to laboratory analysis to assist in further defining the horizontal and vertical extent of the contamination at the project site. The soil samples will be analyzed for the Target Compound List (TCL) of volatile and semi-volatile organic compounds, PCBs and Pesticides, and the Target Analyte List (TAL) metals by standard methods. The soil samples will be extracted from the sampling equipment in a timely fashion such that the soil sample has limited exposure to the outside air reducing the chance for volatilization. The interval chosen to be analyzed for soils from the test borings and test pits will be based, in part, on headspace analysis results and visual observations for staining and odor. Only new pre-cleaned laboratory provided sample containers and caps will be used for sample collection/analyses. All sample containers required to be fixed with a preservative, will be prepared by the laboratory before each sampling event. The container type, cap type and preservative requirements for the analytical parameters (soil) to be analyzed are summarized in Table 2.

TABLE 2
Analytical Requirements for Containers and Preservatives for Soil Sampling

PARAMETER	CONTAINER	TOP	PRESERVATION	COMMENTS
VOCs (Soil)	4 oz Glass	Teflon	Cool	NA
TCL Semi-VOCs, PCBs and Pesticides (Soil)	8 oz Glass	Teflon	Cool	NA
Metals per EPA 6010/7000 (Soil)	8 oz Glass	Poly	None	NA

6.0 SURFACE WATER SAMPLING

Four surface water samples will be collected from four on-site wetlands.

Surface water samples will be collected using clean glass flasks or clean bottom filling stainless steel and/or new factory-sealed disposable bailers with Teflon™ ball check valve. The cleaning/decontamination procedures presented in Section 4.2 will be followed. The samples will be collected by carefully lowering the bailer or flask so that the water surface is minimally disturbed to the desired depth, and then carefully pulling the bailer or flask up to the surface. The samples will be transferred from the bailer or flask directly into the laboratory sample containers. Procedures for filling the containers will be the same as for groundwater sampling discussed in Section 4.5. A new polypropylene or nylon cord will be used at each sample location to raise and lower the bailer. The water samples will be analyzed for TCL volatile and semi-volatile organic compounds, PCBs and Pesticides, and the TAL metals.

After the samples for laboratory analyses are taken, an additional sample will be collected and analyzed in the field for temperature, pH and specific conductance following the procedures identified in Section 4.6 of this FSP. The measured results along with observations of the sample(s) color, odor and appearance will be recorded on the Surface Water Sampling Log.

7.0 SEDIMENT SAMPLING

Four sediment samples will be collected from four on-site wetlands.

Sediment samples will be collected using either a stainless steel container with small openings to allow for the passage of water to the exterior of the container or a manually advanced macro-core sampler with acetate liner, so that a representative sample of sediment can be collected. The samples will be collected from approximately 0 to 8 inches beneath the bottom of the water column and will be characterized by type, thickness, particle size, color and any other distinct physical qualities. The cleaning/decontamination procedure presented in Section 3.10 will be followed for the cleansing of the container and/or macro-core sampler. The samples will be collected by carefully lowering the stainless steel container or macro-core sampler through the water column into the bottom sediments, and then carefully pulling the container or macro-core sampler up to the surface. The samples will be transferred from the container or macro-core sampler directly into the laboratory sample containers. Procedures for filling the containers will be the same as for soil sampling discussed in Section 3.7. The sediment samples will be analyzed for TCL volatile and semi-volatile organic compounds, PCBs and Pesticides, and TAL metals.

8.0 SOIL GAS SURVEY

A soil gas survey will be conducted within areas outside of the existing building floor slab remains of the site and beneath the former buildings concrete slabs.

Samples collected beneath the slabs will be collected from immediately beneath (two inches or less) the slab. Samples collected from open areas of the site will be collected at a minimum depth of five feet below the ground surface. Should groundwater be encountered at a depth of less than five feet below the ground surface, then the samples will be collected at a depth that is approximately one foot above the water table. Based on current groundwater conditions, it is anticipated that samples collected from open areas of the site will be collected at approximately 1 to 3 feet bgs. All attempts will be made to collect the samples concurrently. Where asphalt, concrete or other impervious surface materials exist, the use of mechanical methods (i.e. saw, drill etc.) may be used to penetrate the surface material for soil gas sampling operations.

8.1 Sample Point Installation

8.1.1 Sub-Slab Sample Point Installation

Once the surface materials have been penetrated as necessary, connect the polyethylene or polypropylene tubing to the expendable drive point. The expendable drive point is threaded such that the tubing should be screwed into place. Insert the tubing through the steel drive monitoring rod so that the tube rests on the lip of the expendable drive point. Advance the soil gas monitoring rod, tubing and expendable drive point assembly to just below (two inches or less) the bottom of the slab within the slab structure to minimize the infiltration of ambient air. The probes will be advanced with available means (i.e., concrete corer, hand auger, geoprobe unit etc.).

Note: If sample point refusal is encountered at a depth less than the desired depth, the point will be removed and another attempt will be made within five feet of the original location. Record the distance and direction from the original location in daily field notes. If four unsuccessful attempts are made, the location where the deepest depth was achieved will be utilized for soil gas sampling.

Note: No soil gas sample will be collected from beneath slab locations where

groundwater is present and saturated soil conditions prevail at the depth of the screen point. Adjustments should be made in the target depth below the slab to assure that the sample depth is one foot above the saturated soil condition or surface of the groundwater table. Water level gauging of nearby wells may assist in the determination of the local groundwater depths.

Once the sampling point intake has been set to the desired depth, withdraw the rod about two to three inches to expose the screened portion of the expendable drive point and purge one to three "probe volumes" from the probe and tubing. Connect the tubing directly to the 6-Liter vacuum canisters to create a sealed connection between the canister and the tubing within the ground. The annulus between the tubing and its outer drive casing (if left in place) will be sealed with hydrated bentonite or other non-volatile product to prevent ambient air infiltration. The sample tubing will be sealed above the slab by placing bentonite or other non-volatile product. The bentonite seal will be given sufficient time (usually 24 hours) to provide for the hydration of the bentonite seal prior to sampling. To ensure that ambient air does not enter the annulus, thus affecting the analytical data, a tracer gas (i.e. helium) will be applied within an enclosed structure at the ground surface above the top of the sealed annulus. The tracer gas will be a constituent that will be analyzed for in the field using a portable instrument capable of detecting the tracer gas. The detector will be attached to the end-portion of the tubing that will eventually be attached to the vacuum canister prior to the commencement of sampling. The helium detector will be utilized prior to the start of sampling and at the conclusion of sampling to verify that ambient air is not infiltrating the probe point annulus. The soil vapor probe will be considered adequately sealed if less than 10% tracer (helium) gas is detected.

8.1.2 Ground Surface Sample Point Installation

Once the surface materials have been penetrated as necessary, connect the polyethylene or polypropylene tubing to the expendable drive point. The expendable drive point is threaded such that the tubing should be screwed into place. Insert the tubing through the steel drive monitoring rod so that the tube rests on the lip of the expendable drive point. Advance the soil gas monitoring rod, tubing and expendable drive point assembly to an approximate depth (dependent on depth to groundwater) of five feet bgs at the sample collected from an open area to minimize the infiltration of ambient air. The probes will be advanced with available means (i.e., slide hammer, sledge

hammer, hand auger, geoprobe unit etc.). The soil vapor sampling zone will be approximately 1 to 2 feet in length and will be sealed above the sampling zone for a minimum of 3 feet. However, the length of the seal may be adjusted dependent on the depth to groundwater.

Note: If sample point refusal is encountered at a depth less than the desired depth, the point will be removed and another attempt will be made within five feet of the original location. Record the distance and direction from the original location in daily field notes. If four unsuccessful attempts are made, the location where the deepest depth was achieved will be utilized for soil gas sampling.

Note: No soil gas sample will be collected from below grade locations where groundwater is present and saturated soil conditions prevail at the depth of the screen point. Adjustments should be made in the target depth below grade to assure that the sample depth is one foot above the saturated soil condition or surface of the groundwater table. Water level gauging of nearby wells may assist in the determination of the local groundwater depths.

Once the sampling point intake has been set to the desired depth, withdraw the rod about two to three inches to expose the screened portion of the expendable drive point and purge one to three "probe volumes" from the probe and tubing. Connect the tubing directly to the 6-Liter vacuum canisters to create a sealed connection between the canister and the tubing within the ground. The annulus between the tubing and its outer drive casing (if left in place) will be sealed with hydrated bentonite or other non-volatile product to prevent ambient air infiltration. The sample tubing will be sealed at the ground surface by pushing the ground surface around the sample tubing or placing bentonite or other non-volatile product. The bentonite seal will be given sufficient time (usually 24 hours) to provide for the hydration of the bentonite seal prior to sampling. To ensure that ambient air does not enter the annulus, thus affecting the analytical data, a tracer gas (i.e. helium) will be applied within an enclosed structure at the ground surface above the top of the sealed annulus. The tracer gas will be a constituent that will be analyzed for in the field using a portable instrument capable of detecting the tracer gas. The detector will be attached to the end-portion of the tubing that will eventually be attached to the vacuum canister prior to the commencement of sampling. The helium detector will be utilized prior to the start of sampling and at the conclusion of sampling to verify that ambient air is not infiltrating the probe point annulus. The

soil vapor probe will be considered adequately sealed if less than 10% tracer (helium) gas is detected.

8.2 Sample Collection

Prior to the commencement of sampling, two to three volumes of air will be purged from the sampling apparatus. Once the tubing is connected to the vacuum canister, the laboratory preset flow regulator will be opened for a period of two hours for collection of the soil gas at a rate that will not exceed 0.2 liters per minute. After the two-hour time period is up, close the flow regulator and disconnect the tubing from the Summa canister. The soil gas sampling assembly will be allowed to remain in the ground in the event that additional sampling is requested.

9.0 QUALITY CONTROL DURING SAMPLING IN THE FIELD

Quality control samples will be taken during the field sampling to monitor sampling technique, sampling equipment cleanliness, sample variability, sample handling and laboratory performance (analytical reproducibility). The quality control samples will include replicate samples, equipment/field blanks and transport blanks.

Replicate samples are samples taken from the same location with the same sampling device. Replicate samples are used to check on laboratory reproducibility, sampling technique and sample variability. The replicate samples will be coded so that the laboratory is not biased in performing the analyses. The code that is used will be identified in the field notes and on the sampling logs, but not on laboratory correspondence.

One replicate soil/sediment, one soil gas and one replicate groundwater/surface water sample will be taken for every twenty (20) investigative samples submitted to the laboratory for analysis. The replicate soil/sediment samples will be collected after the desired sampling interval is thoroughly mixed in a stainless steel bowl to achieve a homogeneous sample and then equally spilt into the various analytical containers. The replicate groundwater/surface water samples, except for VOC analysis, will be taken by splitting the sample by alternating the discharge tubing between both sets of containers (sample and replicate containers) until the containers are filled. The replicate groundwater/surface water sample for VOCs analysis will be taken by filling one container completely and then filling the replicate container completely. Groundwater/surface water samples for VOCs analysis are typically taken in triplicate, so this procedure will be repeated three times using a new full bailer of water each time. The replicate soil gas sample will be collected by manifolding two summa canisters at the same sampling location so that the sample is collected concurrently in the two canisters.

Equipment/field blanks are samples taken to monitor sampling equipment cleanliness and decontamination procedures during field sampling. One equipment/field blank will be taken during soil/sediment and groundwater/surface water sampling for every twenty (20) investigative samples submitted to the laboratory for analysis of all of the parameters of concern. The equipment/field blanks will be taken as follows per the environmental media being sampled:

Soil Sampling - After the split-spoon sampler, sampling trowel, macro-core sampler and/or excavator bucket has been decontaminated and are ready for sampling, pour deionized water through and/or over the sampling equipment and collect it in the sample container(s).

Ground/Surface Water - After the bailer has been decontaminated or a new disposable bailer is removed from its packaging and is ready for sampling, pour deionized water into the bailer and then into the sample container(s).

The equipment field blanks will be identified as such and by the location to be sampled (i.e., equipment blank before SB-8 (2 to 4 feet); or before MW-5).

Transport blanks are prepared when VOCs analysis is to be performed, and they are prepared in the laboratory when the sample containers are prepared. Transport blanks will be prepared in triplicate by filling 40 ml glass containers (with Teflon™ lined septum) with deionized water. These containers will travel unopened with the sample containers and be analyzed for the same volatile constituents as the samples being submitted. The transport blanks are taken to monitor whether the samples have been contaminated during transport, as a result of handling in the field, during shipment or during storage in the laboratory. One transport blank will accompany each set of samples (soil or water) that are shipped/delivered to the laboratory for VOCs analysis.

In addition to the above, one ambient air sample will be collected for the soil gas survey from an upwind area as determined in the field on the day of sampling. The ambient air sample will be collected to establish background levels to aid in the comparison of the soil gas sampling analytical results.

The analyses to be performed on the replicate, equipment/field blanks and transport blanks are presented in Table 2 of the QAPP. Additional QC/QA procedures are discussed in the QAPP.

10.0 FIELD INSTRUMENTATION OPERATING PROCEDURES

10.1 General

The field instruments that will be utilized during implementation of the site investigation are: a photoionization detector (PID) meter for air monitoring of the total VOCs during drilling and test pitting, and for headspace analysis of soil samples for total VOCs; and a pH/conductivity/thermometer meter and turbidity meter for field analysis of groundwater and surface water samples for these parameters. The field instruments used will be calibrated and operated in accordance with the manufacturer's instructions and the procedures identified in the following sections. Additionally, ambient dust monitoring will be conducted during test pitting and drilling activities to provide "real time" measurement of dust generated as part of these activities.

10.2 Photoionization Detector Meter

A MiniRae PID meter and data logger with a 10.6 eV lamp will be utilized to measure total VOCs. The instrument is calibrated at the factory upon purchase and annually thereafter using certified service shops who utilize standards of benzene and isobutylene. Prior to use in the field, the instrument will be calibrated in accordance with the manufacturer's instructions using a disposable cylinder containing isobutylene obtained from Pine Environmental Services, Inc. of Hightstown, New Jersey. The calibration value varies by the manufacturer, however, 105 parts per million is commonly utilized by C.T. Male. During use the PID meter will be calibrated at least once every 8 hours. The calibration procedure is contained in the Photovac Microtip User's Manual.

Care will be taken when handling and using the PID meter to prevent any debris from entering the sample line which will effect the instrument's operation. If this occurs the field personnel will clean the unit or replace it with a functional PID meter.

10.3 Temperature, PH and Specific Conductivity Meter

10.3.1 General

The Oakton Portable pH/Con 10 meter, or equal unit, will be used to measure temperature, pH and conductivity. This instrument is equipped with an automatic temperature control for accurate adjustment to the temperatures of the samples and calibration standards. The temperature range is 0°C to 100°C with an accuracy of ±0.5° C.

10.3.2 pH

Prior to collecting the pH readings, the pH meter will be calibrated with standard buffer solutions of pH 4.0, 7.0 and 10.0 with the unit automatically correcting the temperature. The instrument will be calibrated prior to use each day to ensure accurate measurements. Calibration procedures are presented in the manufacturer's operating instructions.

The pH measurement will be taken by setting the meter function to pH mode, immersing the electrode in the sample (after rinsing the probe with deionized water), gently stirring the water with the electrode probe until equilibrium is reached, and recording the pH when the instrument displays "ready." The pH electrode will be rinsed with deionized water after taking a measurement. The manufacture recommends that the electrode be stored in an electrode storage solution when not in use.

10.3.3 Specific Conductivity

Prior to collecting specific conductance readings, the instrument will be calibrated prior to use each day to ensure accurate measurements. Calibration will be performed using standards of 147.0, 717.8 and 1,413 umhos/centimeter, being sure the instrument is showing automatic temperature correction. Calibration procedures are presented in the manufacturer's operating instructions.

The conductivity cell will be rinsed with distilled water before and after use. The measurement will be taken after rinsing the conductivity probe twice with the sample,

immersing the probe in the sample and recording the measured value when the instrument reads "ready."

10.4 Turbidity Meter

A LaMotte Turbidimeter (Model 2008) or equal unit will be used to measure turbidity. The Model 2008 is a true nephelometer, measuring the amount of light scattered at right angles from a beam of light passing through the test sample. The instrument range is 0 to 19.99 NTU (20 scale) and 0-199.9 (full scale). The accuracy of this instrument is ±2% of the reading or 0.05 NTU, whichever is greater. The turbidity is pre-calibrated from the manufacturer, but is regularly calibrated to known standards of typically 4 and 40 NTU.

The turbidity measurement is collected by pouring a sample into a dedicated VOA vial or cuvette. The cuvette is wiped clean and them inserted into the instrument's chamber and covered. The reading is noted once stabilized.

10.5 Dust Monitors

C.T. Male will utilize two TSI Dust Tracks (or equal unit) real-time particulate monitors capable of continuously measuring concentrations of airborne dust, smoke, mists, haze, and fumes with real time readout (or equivalent). This instrument will detect particles from 0.1 to 10 micrometers in size. The instruments will be placed at temporary monitoring stations based on the prevailing wind direction each day, one upwind and one downwind of the work area. The short-term exposure limit (STEL) is a 15 minute time-weighted average (TWA) exposure that is also measured by the particulate monitors. Dust monitoring equipment is calibrated by the supplier and zeroed daily in the field prior to each day's use.

11.0 SAMPLE HANDLING AND CHAIN OF CUSTODY PROCEDURES

Just prior to sampling and filling the sample containers, the label on the container will be completed with the required information. After filling the sample containers they will be wiped with a paper towel, and placed in a protective bubble or foam wrap to protect it during transport. The container(s) will be placed in a cooler with double bagged ice packs, to maintain a temperature of 4°C.

A Chain of Custody Record will be completed by the sampler in the field after securing analytical samples. The sampler will be responsible for retaining possession of the samples until they are delivered to the laboratory or until they are delivered to a courier or common carrier for shipment to the laboratory. When the samples are released from the custody of the sampling personnel, the Chain of Custody Record will be signed by both relinquishing and receiving parties with the date and time indicated. A copy of the form will be retained by the sampler for inclusion in the project files and the original form will accompany the shipment. The Chain of Custody Record will then be signed by the relinquishing party and receiving laboratory personnel when the samples are ultimately received at the laboratory.

If samples are shipped, a bill of lading or an air bill will be used and retained in the project files as documentation of sample transportation. Prior to shipment, the cooler will be securely wrapped with clear tape to protect it from tampering. A separate additional Chain of Custody Record will be completed for each cooler of samples. This form will be placed in a plastic bag and taped to the underside of the cooler lid. This form will be used by the laboratory personnel as a check to verify that the containers listed on the form are present in the cooler when they are received at the laboratory. A copy of the signed Chain of Custody Record will accompany the laboratory analysis reports. A blank Chain of Custody Record form is enclosed in Appendix A.

12.0 WATER LEVEL MEASUREMENT PROCEDURES

Water levels will be measured in the monitoring wells using a water level indicator probe. The water levels will be measured from the surveyed reference point to the nearest 0.01 foot. Water levels will be measured progressively from upgradient monitoring wells to downgradient monitoring wells, attempting to measure water levels from the cleanest well to the dirtiest well.

To avoid possible cross contamination of the wells, the water level indicator will be decontaminated prior to and following the water measurement of individual wells. The water level indicator will be decontaminated by rinsing it with distilled water or tap water, then rinsing it with methanol and wiping it with a clean cloth or paper towel and then rinsing it with copious amounts of distilled water.

The water depth levels and reference elevations determined from the monitoring well survey will be recorded on a Water Level Record form and the water table elevations calculated. A blank copy of this form is presented in Appendix A.

FIGURE 1

TYPICAL OVERBURDEN MONITORING WELL DIAGRAM

Well No. _____

MONITORING WELL CONSTRUCTION LOG

C.T. MALE ASSOCIATES, P.C.

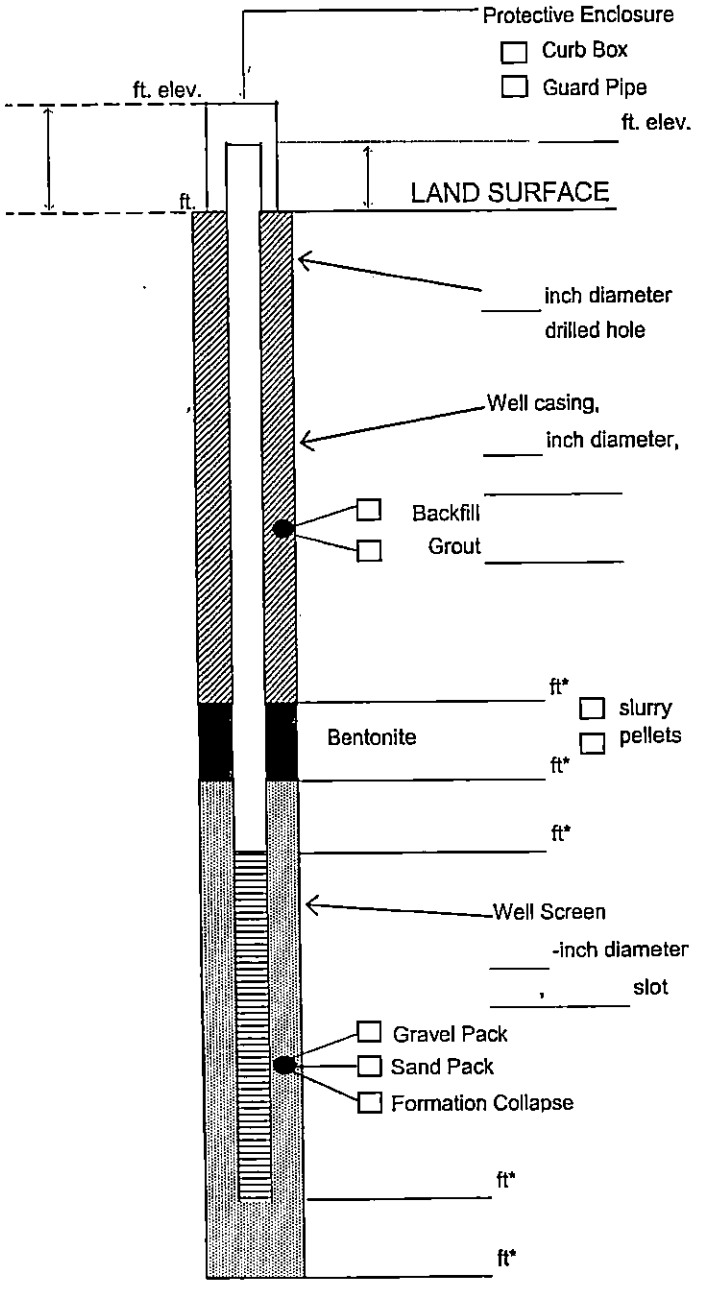

* Depth below land surface.

Project Number _____

Project Name _____

Well No. _____ Boring No. _____

Town/City _____

County _____ State _____

Installation Date(s) _____

Drilling Contractor _____

Drilling Method _____

Water Depth From Top of Riser _____ ft _____ Date

C.T. Male Observer _____

Notes:

APPENDIX A

QUALITY ASSURANCE/QUALITY CONTROL (QA/QC) FORMS

and

FIELD REPORT FORMS

C.T. MALE ASSOCIATES, P.C.

WATER LEVEL RECORD

Project Name _____ Project Number _____
Location _____ Measurement Taken By _____
Method or Reading _____ Datum _____

		Date _____		Date _____		Date _____	
Well No.	Ref. Elev.	Depth	Elev.	Depth	Elev.	Depth	Elev.

Measuring Point(s) _____

Groundwater Services Field Log

DATE: _____ PROJECT NAME: _____

PROJECT NO.: _____ PROJECT LOCATION: _____

SAMPLING PERSONNEL: _____

MONITORING WELL ID#: _____ NOTES TAKEN BY: _____

DEPTH TO WATER: _____ FROM: _____ BAILER ID: _____

DEPTH TO BOTTOM: _____ FROM: _____ BAILER: LAB CLEANED / FIELD CLEANED

WATER COLUMN HEIGHT: _____ BAILER: STAINLESS STEEL _____

OTHER _____

CONVERSION FACTORS LINEAR FEET TO GALLONS

1" = 0.041 GALLONS	3" = 0.38 GALLONS
1.25" = 0.064 GALLONS	4" = 0.66 GALLONS
2" = 0.16 GALLONS	6" = 1.47 GALLONS

WELL CASING DIAMETER

LL VOLUME: _____ GALLONS

VOLUMES PURGED: _____ GALLONS PURGE METHOD: _____

TIME STARTED: _____ ; TIME FINISHED: _____

OBSERVATIONS: COLOR _____ ; ODOR _____

SHEEN _____ ; TURBIDITY _____

OTHER _____ _____

WATER RECOVERY HEIGHT: _____ ; RECOVERY TIME IN MINUTES: _____

FIELD PARAMETERS: pH _____ , TEMPERATURE _____

CONDUCTIVITY _____ UMHO/CM, OTHER _____

SAMPLE COLLECTION TIME: _____

NOTES: _____

_____

_____

C.T. MALE ASSOCIATES, P.C.

SUBSURFACE EXPLORATION LOG

BORING NO.:
ELEV.: DATUM:
START DATE: FINISH DATE:
SHEET OF

PROJECT: CTM PROJECT NO.:

LOCATION: CTM INSPECTOR:

DEPTH (FT.)	SAMPLE TYPE	SAMPLE NO.	BLOWS ON SAMPLER 0/6	6/12	12/18	18/24	N	RECOVERY	SAMPLE CLASSIFICATION	NOTES
5										
10										
15										
20										
25										
30										

N = NO. OF BLOWS TO DRIVE 2" SAMPLER 12" WITH A 140 LB. WT. FALLING 30" PER BLOW

DRILLING CONTRACTOR: DRILL RIG TYPE:

METHOD OF INVESTIGATION:

GROUNDWATER LEVEL READINGS

DATE	LEVEL	CASING	STABILIZATION TIME

SAMPLE CLASSIFICATION BY:

THE SUBSURFACE INFORMATION SHOWN HEREON WAS OBTAINED FOR C.T. MALE DESIGN PURPOSES. IT IS MADE AVAILABLE TO AUTHORIZED USERS ONLY THAT THEY MAY HAVE ACCESS TO THE SAME INFORMATION AVAILABLE TO C.T.MALE. IT IS PRESENTED IN GOOD FAITH, BUT IS NOT INTENDED AS A SUBSTITUTE FOR INVESTIGATIONS, INTERPRETATION OR JUDGMENT OF SUCH AUTHORIZED USERS.

C.T. MALE ASSOCIATES, P.C.

GEOPROBE SUBSURFACE EXPLORATION LOG

BORING NO.:
ELEV.: DATUM:
START DATE: FINISH DATE:
SHEET OF

PROJECT: _____ CTM PROJECT NO.: _____

LOCATION: _____ CTM OBSERVER: _____

DEPTH (FT.)	SAMPLE INTERVAL	SAMPLE NO.	SAMPLE RECOVERY (FT)	SAMPLE CLASSIFICATION	NOTES
4					
8					
12					
16					
20					
24					
28					

DRILLING CONTRACTOR: _____ GEOPROBE TYPE: _____

METHOD OF SAMPLING: _____

GROUNDWATER LEVEL READINGS

DATE	LEVEL	REFERENCE MEASURING POINT

SAMPLE CLASSIFICATION BY:

THE SUBSURFACE INFORMATION SHOWN HEREON WAS OBTAINED FOR C.T. MALE ASSESSMENT PURPOSES. IT IS MADE AVAILABLE TO AUTHORIZED USERS ONLY THAT THEY MAY HAVE ACCESS TO THE SAME INFORMATION AVAILABLE TO C.T.MALE. IT IS PRESENTED IN GOOD FAITH, BUT IS NOT INTENDED AS A SUBSTITUTE FOR INVESTIGATIONS, INTERPRETATION OR JUDGMENT OF SUCH AUTHORIZED USERS.

C.T. MALE ASSOCIATES, P.C.

Environmental Services Field Log

Date: _____ Time On-Site: _____ Time Off-Site: _____

Project Name: _____ Project No.: _____

Purpose: _____ Field Report No: _____

Weather Conditions: _____

Present at Site: _____

Observations: _____

Items to Verify: _____

List of Attachments: _____

Field Log Prepared by: _____

Copies to:

C.T. MALE ASSOCIATES, P.C.

Environmental Services Field Log
(continued)

Project Name: _____ Project No.: _____

Observations: _____

ORGANIC VAPOR HEADSPACE ANALYSIS LOG

PROJECT:	PROJECT #:	PAGE 1 OF
CLIENT:		DATE COLLECTED:
LOCATION:		
INSTRUMENT USED: LAMP eV		DATE ANALYZED:
DATE INSTRUMENT CALIBRATED:	BY:	
TEMPERATURE OF SOIL:		ANALYST:

EXPLORATION NUMBER	SAMPLE NUMBER	DEPTH (FT.)***	SAMPLE TYPE	SAMPLE READING (PPM)**	BACKGROUND READING (PPM)**	REMARKS

*Instrument was calibrated in accordance with manufacturer's recommended procedure using a calibration gas supplied by the manufacturer.
**PPM represents concentration of detectable volatile and gaseous compounds in parts per million of air.

TEST PIT LOG

C.T. MALE ASSOCIATES, P.C.
50 Century Hill Drive, P.O. Box 727
Latham, NY 12110-0727
(518) 786-7400 • FAX (518) 786-7299
Building Systems • Engineering • Environmental Services • Land Information Services

PROJECT NAME: _____ EXCAVATOR: _____

PROJECT NUMBER: _____ EQUIPMENT: _____

LOGGED BY: _____ DATE: _____

TEST PIT NO. _____

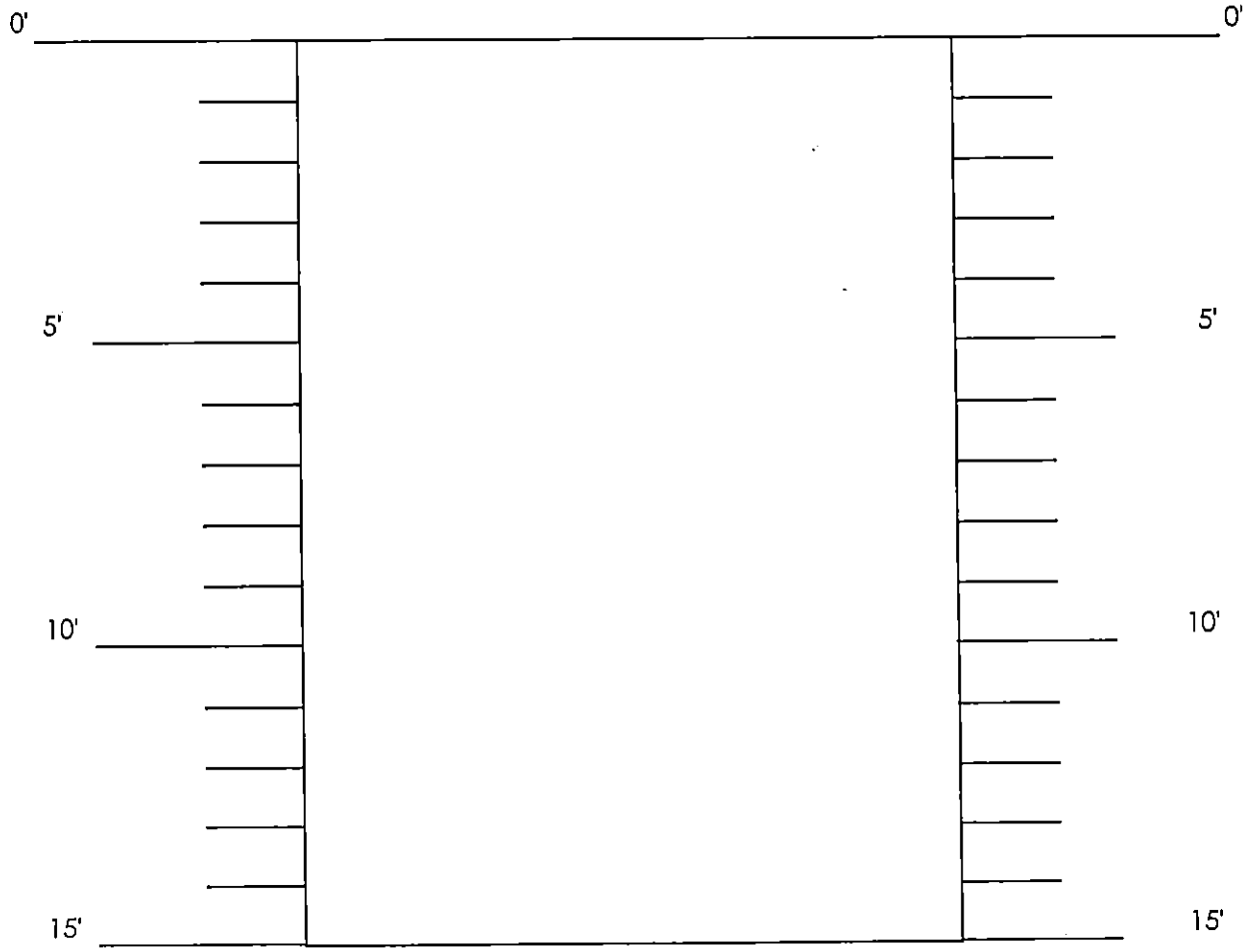

TOTAL DEPTH: _____

WATER AT: _____

SIZE OF TEST PIT: _____

NOTES: _____

C.T. MALE ASSOCIATES, P.C.

STREAM WATER SAMPLING LOG

DATE: _____ PROJECT NO: _____

SAMPLING PERSONNEL: _____ PROJECT NAME: _____

_____ PROJECT LOCATION: _____

SAMPLING LOCATION: _____ _____

_____

SAMPLE COLLECTION TIME: _____

DEPTH OF STREAM AT SAMPLING POINT: _____

WIDTH OF STREAM: _____

STREAM VELOCITY: _____

WATER LEVEL AT MEASURING POINT: _____

OBSERVATIONS: COLOR _____, ODOR _____

SHEEN _____, TURBIDITY _____

OTHER _____

FIELD PARAMETERS: pH _____

TEMPERATURE _____

CONDUCTIVITY _____

OTHER _____

NOTES: _____

_____

_____

_____

_____

Sheet 1 of ___

MAC-155

APPENDIX B

QUALITY ASSURANCE PROJECT PLAN
OLD CHAMPLAIN MILL SITE
VILLAGE OF WHITEHALL
WASHINGTON COUNTY, NEW YORK

NYS BROWNFIELD CLEANUP PROGRAM
QUALITY ASSURANCE PROJECT PLAN
OLD CHAMPLAIN MILL SITE
VILLAGE OF WHITEHALL
WASHINGTON COUNTY, NEW YORK

KEY PERSONNEL AND SIGNATURES

Approved: _____ Date: _____

Project Principal
David Roecker, P.E.
Vice President, Environmental Services Division
C.T. Male Associates, P.C.

Approved: _____ Date: _____

Project Manager
Kirk Moline
Hydrogeologist
C.T. Male Associates, P.C.

Approved: _____ Date: _____

Project Scientist & Health and Safety Coordinator
Stephen Bieber
Environmental Scientist
C.T. Male Associates, P.C.

Approved: _____ Date: _____

Quality Assurance Officer
Elizabeth Rovers, P.E.
Managing Engineer
C.T. Male Associates, P.C.

NYS BROWNFIELD CLEANUP PROGRAM
QUALITY ASSURANCE PROJECT PLAN
OLD CHAMPLAIN MILL SITE
VILLAGE OF WHITEHALL
WASHINGTON COUNTY, NEW YORK

TABLE OF CONTENTS

		Page
1.0	PROJECT DESCRIPTION	1
1.1	Introduction	1
1.2	Objectives and Scope of Work	2
2.0	PROJECT ORGANIZATION AND RESPONSIBILITIES	3
3.0	QUALITY ASSURANCE OBJECTIVES FOR DATA MEASUREMENT	6
3.1	General	6
3.2	Data Uses and Types	6
3.3	Data Quality Needs	6
3.4	Quality Control Checks and Acceptance Criteria	8
4.0	SAMPLING PROCEDURES	10
5.0	SAMPLE CUSTODY	11
6.0	CALIBRATION PROCEDURES	12
7.0	SAMPLE PREPARATION AND ANALYTICAL PROCEDURES	13
8.0	DATA REDUCTION, VALIDATION AND REPORTING	15
9.0	INTERNAL QUALITY CONTROL	17
10.0	PERFORMANCE AND SYSTEMS AUDITS	18
10.1	Field Audits	18
10.2	Laboratory Audits	18
11.0	PREVENTATIVE MAINTENANCE	19
12.0	DATA ASSESSMENT PROCEDURES	20
13.0	CORRECTIVE ACTIONS	22
14.0	QUALITY ASSURANCE REPORTS TO MANAGEMENT	23

FIGURES

Figure 1: Project Organizational Chart

TABLES

Table 1: Summary of Work Tasks and Corresponding Analytical Levels

Table 2: Analytical Methods and Requirements

NYS BROWNFIELD CLEANUP PROGRAM
QUALITY ASSURANCE PROJECT PLAN
OLD CHAMPLAIN MILL SITE
VILLAGE OF WHITEHALL
WASHINGTON COUNTY, NEW YORK

TABLE OF CONTENTS

APPENDICES

Appendix A:	Laboratory Certifications (Pending)
Appendix B:	Data Validator Qualifications and Experience
Appendix C:	Guidance for the Development of DUSR

1.0 PROJECT DESCRIPTION

1.1 Introduction

This Quality Assurance Project Plan (QAPP) has been prepared for the implementation of the remedial investigation activities at the Old Champlain Mill Site ("the site") located at 16-50 Poultney Street in the Village of Whitehall, Washington County, New York. It has been developed in conjunction with the Remedial Investigation (RI) Work Plan as prepared by C.T. Male Associates, P.C. (C.T. Male). A description of the site, available background information, objectives and the remedial investigation scope of work are presented in detail in the referenced RI Work Plan.

This QAPP presents the organizational structure and data quality objectives (DQOs) for the remedial investigation, and the quality assurance (management system) and quality control methods of checks and audits to be implemented to ensure that the quantity and quality of the data required for its intended use is obtained and documented (i.e., that DQOs are met). The measurement parameters used to determine the quality of the data are precision, accuracy, completeness, representativeness and comparability, and are discussed further in this QAPP.

A Field Sampling Plan (FSP) has been prepared by C.T. Male as a separate exhibit and forms an integral part of this QAPP. The field sampling and data gathering procedures are presented in the FSP and incorporated into the QAPP by reference. The QAPP and FSP document the laboratory quality assurance/quality control (QA/QC) procedures and field sampling and data gathering procedures that will be followed during implementation of the remedial investigation scope of work so that valid data of a known quality is generated.

The project specific field QA/QC procedures and the project specific laboratory QA/QC procedures are presented in the text of this QAPP. The general internal laboratory QA/QC procedures are presented in the subcontractor laboratory's Quality Manual which is retained at C.T. Male's office. The subcontract laboratory for this project has not yet been determined, and will be selected through a competitive bidding process. The laboratory certifications will be included in Appendix A upon selection of the laboratory.

The QAPP has been prepared in a manner consistent with the following guidance documents:

- Guidance for Conducting Remedial Investigations and Feasibility Studies Under CERCLA, EPA/540/G-89/004, USEPA, October 1988.
- Data Quality Objectives for Remedial Response Activities: Development Process, EPA/540/G-87/003, USEPA, March 1987.
- Draft DER-10 Technical Guidance For Site Investigation and Remediation, NYSDEC, December 2002.
- 6 NYCRR Part 375, Environmental Remediation Programs, Subparts 375-1 to 375-4 and 375-6, Effective December 14, 2006.

1.2 Objectives and Scope of Work

It is the objective of the RI and this QAPP to obtain and present representative data of a known quality and sufficient quantity. The primary goal is to perform soil, wetland sediment and surface water, and groundwater sampling through a variety of investigation tasks to evaluate the quality of the site's soils, wetland water and sediments, and groundwater. The data will help document overall protection requirements for human health and the environment based on the site's contemplated use.

To achieve these objectives, the scope of work will include the following items as presented in the RI Work Plan, this QAPP and the FSP: a site reconnasissance to identify areas and conditions of concern not previously identified; a fish and wildlife impact analysis; a site wide subsurface/hydrogeologic evaluation which will include borings/monitoring wells and test pits; an investigation of the quality of sediments and surface water within the on-site wetland; and surface and subsurface soil, sediment, soil gas, surface water and groundwater sampling and analysis.

2.0 PROJECT ORGANIZATION AND RESPONSIBILITIES

C.T. Male Associates, P.C. (C.T. Male) is responsible for the overall administration and the overall quality control/quality assurance of the remedial investigation and remedial activities. These will include project management, coordination and scheduling of activities in-house and with qualified subcontractors. The work tasks that will be performed by a subcontractor under C.T. Male's supervision include: advancement of exploratory test pits, conventional auger drilling of borings/monitoring wells, and analytical laboratory testing.

A project organizational chart listing key individuals of the project and their associated title is presented as Figure 1 at the end of this document. Personnel from C.T. Male, the subcontract laboratory and data validator can be reached at the following addresses:

- C.T. Male Associates, P.C.
  Contact: Stephen Bieber and Kirk Moline
  50 Century Hill Drive, P.O. Box 727, Latham, New York 12110
  Phone: (518) 786-7400
  Fax No.: (518) 786-7299
  Email: s.bieber@ctmale.com and k.moline@ctmale.com

- Laboratory: to be determined

- Data Validator: C.T. Male Associates, P.C.
  Contact: Megan Drosky
  50 Century Hill Drive, P.O. Box 727, Latham, New York 12110
  Phone: (518) 786-7400
  Fax No.: (518) 786-7299
  Email: m.drosky@ctmale.com

A description of the responsibilities by title of the key individuals is presented as follows:

Project Principal is responsible for the review of the RI/AAR activities and reports for their technical adequacy and conformance to the scope of work.

Quality Assurance Officer is responsible for the independent review of the RI/AAR documents and reports to check that the appropriate project documentation, of the quality control activities performed, exist and are maintained; and for conducting field and sampling audits. Analytical data will also be reviewed by this individual for accuracy and completeness.

Project Manager is responsible for the overall coordination and implementation of the project, the management of staff and resources, the implementation of schedules, the conformance by the technical staff and subcontractors to the scope of work, assessing the adequacy of the work being performed, implementing corrective action as necessary, interaction with the client and regulatory agencies, maintaining complete project documentation, and report preparation.

Health and Safety Coordinator is responsible for implementation of the project specific Health and Safety Plan, and resolution of safety issues which arise during the completion of the work. The Health and Safety Coordinator or designee will be present during the completion of the field work.

Laboratory Quality Assurance Officer is responsible for review of the laboratory data quality control procedures and documentation to determine if the QA objectives are being met; and to report non-conforming events to the laboratory technical staff and Project Manager and implement corrective action as necessary.

Laboratory Director is responsible for all activities within the laboratory, and for the performance of the laboratory work tasks in accordance with the project work plans, interactions with the Project Manager, and the adherence to project schedule.

Project Geologist/Engineer/Scientist is responsible for coordinating and conducting the field hydrogeologic activities and subcontractors, the adherence of activities to the QAPP and the FSP, evaluation of the collected data, soil classifications, report preparation and interaction with Project Manager and Project Team.

Project Team is responsible for adequately performing the work tasks in accordance with the project work plans so that the objectives of investigations and the project are achieved, notifying the Project Manager of any non-conformance to the work plan so that corrective actions can be taken as necessary, and notifying the Project

Manager of unforeseen conditions so that modifications to the work plan, if necessary, can be approved and implemented.

Data Validator is responsible for review of all analytical data generated for this project. The data validator will review analytical data in accordance with New York State Department of Environmental Conservation Guidance for the Development of Data Usability Summary Reports and preparation of a report documenting if the analytical data is valid and usable. The report will also present data rejection and qualification, where necessary, based on laboratory performance.

3.0 QUALITY ASSURANCE OBJECTIVES FOR DATA MEASUREMENT

3.1 General

The Quality Assurance (QA) objective for this project is to produce data which is technically valid and of a known quality that meets the needs of its intended use. In this section the data quality objectives (DQOs) are defined by describing the intended use of the data; defining the type of data needed (i.e., physical or analytical); specifying the analytical levels, as established by EPA, appropriate to the data uses; specifying the quality control checks on field and laboratory procedures and frequency of checks; and presenting the quality control acceptance criteria.

Laboratory quality assurance objectives for data measurement are established for each measurement parameter in terms of precision, accuracy, completeness, representativeness and comparability. These terms form an integral part of the laboratory's quality assurance programs in that DQOs are set for each parameter.

3.2 Data Uses and Types

The data to be generated during the proposed work will be through completion of the remedial investigation, and health and safety administration during implementation of the field activities. Both physical data including air monitoring and analytical data from soil gas (if needed), soil, sediment, surface water and groundwater will be needed to provide the necessary information to complete the steps in the remedial investigation. The specific physical and analytical data proposed and its purposes are presented in the RI Work Plan.

3.3 Data Quality Needs

To support data collection activities in obtaining quality data, EPA has established a series of analytical levels that are appropriate to remedial investigation/remediation data uses. The analytical levels are defined as follows:

Level I	Field screening or analysis using portable instruments. Qualitative data.
Level II	Field analyses using more sophisticated portable analytical instruments. Qualitative and quantitative data can be obtained.

Level III	Laboratory analyses using standard EPA approved procedures/methods.
Level IV	Laboratory analyses by NYSDEC ASP (Analytical Services Protocol) - Category B Data Deliverable with QA/QC protocols and documentation.
Level V	Analyses by non-standard methods.

The data collection activities, the environmental media, the intended use of the data and the corresponding analytical levels that will be used to produce the project data are summarized in Table 1.

Table 1

Summary of Work Tasks and Corresponding Analytical Levels

Data Collection Activities	Sample Media & Description	Data Use[a]	Analytical Level
PID Monitoring	Soil Vapors	1,2	I
Air Monitoring	Air/Ambient Air	2	I
Test Pits, Test Borings, Monitoring Wells, and Surface Soil, Subsurface Soil, Sediment, Soil Gas (if needed), Groundwater and Surface Water Sampling	Surface and Subsurface Soil, Sediment, Surface Water, Groundwater and Soil Gas (if needed) for Laboratory Analyses and Field Instrumentation.	1, 3 & 4	I (Field Instrumentation), II (pH, Temperature and Specific Conductivity in Field on Groundwater Samples) and IV (Laboratory Analyses)

Note:

(a) Data Uses Key:
- 1 - Site Characterization.
- 2 - Health and Safety and Community Air Monitoring During Implementation of Field Activities.
- 3 - Risk Assessment.
- 4 - Evaluation of Remediation Alternatives.

Another consideration besides defining the Data Quality Needs is what level of cleanup will be required for the site. The applicable or relevant and appropriate requirements (ARARs) are related to defining satisfactory cleanup efforts. In order

to be able to evaluate the data generated with respect to potential ARARs, the samples will need to be analyzed by analytical methods that can achieve detection limits below or at existing ARAR values. The analytical methods selected for this project are designed to achieve ARAR values.

3.4 Quality Control Checks and Acceptance Criteria

To monitor and document the integrity of such factors as sample variability, sampling equipment cleanliness, sampling technique, analytical reproducibility and sample handling which can affect data quality, several field quality control checks will be implemented. These will include taking equipment/field blanks after the sampling equipment has been decontaminated to check for cross contamination and equipment cleanliness; taking replicate samples to monitor analytical precision/ reproducibility and sampling technique; and preparing transport blanks to be transported with the sample containers for volatile analyses to monitor sample handling. For this project the field Quality Control (QC) checks will consist of one matrix spike/matrix spike duplicate, one equipment/field blank, and one replicate/duplicate sample during sampling activities for every twenty (20) analytical samples per media type (i.e. soil, groundwater, surface water, sediment and soil gas (if needed)). A transport blank will be prepared for each sample set to be submitted for volatile analyses.

Laboratory quality control checks will be those specified in EPA Methods or in the NYSDEC ASP (Revised 2000) for the analytical method performed and could consist of some of the following:

- Blanks (method, preparation),
- initial and continuing calibrations,
- surrogate spikes,
- matrix spikes/matrix spike duplicates,
- ambient samples,
- duplicate samples, and
- control samples/matrix spike blanks.

The laboratory will be responsible for performing what is necessary for complying with appropriate standards and certifications of the selected EPA method and ASP

requirements. The laboratory quality control acceptance criteria is method specific and will be the laboratory's responsibility to meet ASP (Revised 2000) criteria.

4.0 SAMPLING PROCEDURES

Procedures for sampling are presented in the Field Sampling Plan (FSP) and include the following:

- Selection of sampling sites and media to be sampled,
- specific sampling procedures for each environmental media to be sampled, and for QC samples to be taken,
- field soil screening procedures,
- a description of the containers, procedures and equipment used for sample collection, preservation, transport and storage,
- procedures for preparing the sample containers and sampling equipment prior to sampling and decontamination of sampling equipment during sampling,
- chain of custody procedures and forms, and
- description of the procedures, forms and notebooks to be used to document sampling activities, sample conditions and field conditions.

5.0 SAMPLE CUSTODY

Proper chain of custody will be established and maintained through a series of steps, beginning in the field and ending with final disposition of the analyzed sample. At the time of the field sampling, an external chain of custody record form will be utilized to track sample collection until delivery to the analytical laboratory. An internal or "intra-laboratory" chain of custody will be used by laboratory personnel to track the sample(s) from the point it is received/logged and passed through the laboratory process. Chain of custody procedures are discussed in detail in Section 11.0 of the FSP.

6.0 CALIBRATION PROCEDURES

Calibration procedures for field equipment including the photo-ionization detector (PID) meter, pH/conductivity/temperature meter and dust monitors are presented in Section 10.0 of the FSP. Calibration procedures for laboratory equipment/instrumentation consist of the production and use of current certifiable standards and the measurement/adjustment of the instrument response. The laboratory is responsible for maintaining records documenting use of current standards and acceptable instrument responses. The laboratory is required to flag analytical data that has had potential contamination or poor instrument calibration that may have occurred during the analytical process.

7.0 SAMPLE PREPARATION AND ANALYTICAL PROCEDURES

The analytical parameters, sample preparation and analysis methods, acceptable holding times and required method detection limits are presented in Table 2. The analytical methods specified reflect the requirements of the NYSDEC ASP, Revised June 2000.

Table 2
Analytical Methods and Requirements

Analytical Parameters	EPA Method	Holding Times(2)	Contract Required Quantitative Limits (as noted)(1)
TCL Volatile Organic Compounds (VOCs)	8260B	Soil/Sediment: 7 Days to Analysis (cool to 4° C). Water: 7 Days Unpreserved to Analysis, 10 Days Preserved (HCl to pH<2) to Analysis.	10-100 ug/kg (Soil) 1 to 10 ug/l (Water)
TCL Semi-Volatile Organic Compounds	8270C	5 Days to Extraction, 40 Days to Analyze	330 to 800 ug/kg (Soil) 10-25 ug/l (Water)
TCL Pesticides	8081	5 Days to Extraction, 40 Days to Analyze	1.7 to 170 ug/kg (Soil) 0.05-1 ug/l (Water)
TCL PCBs	8082	5 Days to Extraction, 40 Days to Analyze	33 to 67 ug/kg (Soil) 0.5-5.0 ug/l (Water)
TAL Metals (Except Mercury)	6010/7000 Series	180 Days except for Mercury (28 Days)	0.3 to 500 mg/kg (Soil) 3 to 5,000 ug/l (Water)
Mercury	7471 (soil) 7470 (water)	26 Days 26 Days	0.02 mg/kg (soil) 0.2 ug/l (water)
Soil Gas For VOCs	TO-15	30 Days	1 mcg/m^3 or less

Note:
1) The listed method detection limits are practical quantitation limits (PQLs). The method detection limit (MDL) is the best possible detection. Laboratories report PQLs which are typically 4 times the MDL for liquids and varies for solids depending on the quantity of contamination present. Efforts will be made to obtain the lowest possible detection limit. When the guidance value or standard value is below the detection limit, achieving the detection limit will be considered acceptable for meeting that guidance or standard value.

2) Holding times are relative to the verifiable time of receipt at the laboratory.

Where matrix interference is noted, analytical clean-ups will be required to be performed by the laboratory following the procedures specified in SW-846 or the NYSDEC ASP, as applicable. In general, samples shall not be diluted more than 1 to 5.

8.0 DATA REDUCTION, VALIDATION AND REPORTING

The field measurement data and the laboratory analyses results of detected parameters will be compiled and tabulated to facilitate comparison and evaluation, and will be included in the Final RI Report. The tabulated data will include at a minimum:

- soil and sediment analysis results,
- soil gas (if needed) analysis results,
- surface water and groundwater analysis results, and
- quality control results (equipment/field blanks, matrix spike and matrix spike duplicate, replicates/duplicates and transport blanks).

Field logs will also be compiled and included, in part, in the text and appendices of the Final RI Report, and will consist of:

- monitoring well construction logs,
- test pit logs,
- test boring logs,
- organic vapor headspace analysis logs,
- groundwater services field logs,
- surface water sampling logs,
- wetlands sediment sampling logs,
- environmental services field logs, and
- water level records.

Any observations or problems encountered during field activities which could affect the quality of the data or its validity will be noted on the appropriate field log.

The laboratory will generate ASP Category B Data Deliverable Package(s) that may be submitted as a separate volume to the RI Report. It will include analytical results and quality control data deliverables as required by NYSDEC ASP (Revised 2000).

Internal data validation will be performed by the laboratory QA officer to ensure that the data package is complete and meets the criteria to the RI Work Plan and this QAPP. Any problems encountered in performing the analyses by the laboratory such as out of limits surrogate recoveries, and comments on the quality and

limitations of specific data and the validity of the data will be described in the case narrative of the laboratory report.

External data validation will be performed by C.T. Male's in-house data validator who will utilize the USEPA National and Regional Validation Guidelines/Procedures and the NYSDEC Guidance in the Development of Data Usability Summary Reports to determine the applicable qualifications of the data. The validator will then prepare a NYSDEC Data Usability Summary Report (DUSR) in accordance with NYSDEC guidelines. Please note that the data validator will not be involved in any other portions of the project. The proposed data validator's qualifications and work experience is presented in Appendix B. The NYSDEC DUSR guidance is presented in Appendix C for reference.

9.0 INTERNAL QUALITY CONTROL

Field QC will consist of taking equipment/field blanks, matrix spike and matrix spike duplicates, replicate/duplicate samples, and having transport blanks with the volatile organic compound sample sets. Field instrumentation will also be calibrated prior to use and the calibration maintained as discussed in the FSP (Section 10.0).

Internal laboratory QC will generally consist of:

- Method (instrument) blanks,
- initial and continuing calibrations,
- surrogate spikes,
- matrix spikes/matrix spike duplicates,
- duplicate samples, and
- laboratory control samples/matrix spike blanks.

The QC samples will be run in accordance with the protocols and frequencies specified in the NYSDEC ASP, SW-846 and EPA Methods as applicable for the analyses being performed.

10.0 PERFORMANCE AND SYSTEMS AUDITS

10.1 Field Audits

Field performance audits will consist of taking replicate/duplicate samples and equipment/field blanks and analyzing them for the same parameters as other samples.

Field system audits will be conducted during field operation to ensure that the field activities are being conducted correctly and in accordance with the RI Work Plan. The project field supervisor will check that the field instrumentation is calibrated prior to use, that field measurements are taken correctly, that equipment is properly decontaminated, and that the field activities are properly documented. Any deficiencies will be reported to the project manager and discussed with the field staff immediately and corrective action taken. The person conducting the field audits will document the field system audits by use of a field report and submit the report to the project manager for review on a bi-weekly basis at a minimum. The project quality assurance officer, geologist/engineer or project manager will conduct system audits as appropriate or warranted.

The project manager will review the field system audit reports and the field documentation for completeness and correctness, and check that the work is proceeding on schedule and in accordance with the work plans.

10.2 Laboratory Audits

Laboratory system audits are not required, however, if the laboratory is required to maintain New York State Department of Health (NYSDOH) ELAP certification. A copy of the laboratory NYSDOH ELAP certification documentation will be provided. Part of this certification process typically includes periodic performance evaluations and on-site systems audits.

11.0 PREVENTATIVE MAINTENANCE

C.T. Male Associates, P.C. keeps an inventory of all field equipment and it is kept locked in a designated area. The field equipment is signed out when in use and its condition checked upon its return. The equipment is kept in good working order and frequently checked and calibrated by qualified employees. Additionally, select equipment (i.e., PID) is routinely serviced for cleaning and calibration by an independent repair facility.

The project geologist/engineer/scientist and field sampler are responsible for assuring that the field equipment is tested, cleaned, charged and calibrated in accordance with the manufacturer's instructions prior to taking the equipment out into the field.

12.0 DATA ASSESSMENT PROCEDURES

The field and laboratory generated data will be assessed for precision, accuracy, representativeness, completeness, and comparability (PARCC parameters). Both quantitative and qualitative procedures will be used for these assessments.

The criteria for assessment of field measurements will be that the measurements were taken in accordance with the procedures specified in the FSP using calibrated instruments. Assessment of the sampling data with respect to field performance will be based on the criteria that the samples were properly collected and handled. Field replicate/duplicate, equipment/field blank and transport blank sample results will be used in assessing the sampling technique, representativeness of the samples collected and sample handling/transport.

The laboratory will calculate and report the precision, accuracy and completeness of the analytical data. Precision will be expressed as the relative percent difference (RPD) between values of duplicate samples. Accuracy will be expressed as percent difference (PD) for surrogate standards and matrix spike compounds. Completeness is a measure of the amount of valid data derived from a set of samples based on the total amount expected to be derived under normal conditions. The precision and accuracy results will be compared to the QC acceptance criteria specified for each test method in the NYSDEC ASP (Revised June 2000).

The representativeness of the analysis is dictated primarily by the field sampling technique and sample location, as opposed to laboratory operations. The laboratory will take steps to ensure that the analysis is representative of the sample being submitted. The criteria for ensuring representativeness of the analysis are careful aliquot selection and proper compositing techniques. Laboratory performance will be based on the criteria that the samples were properly handled prior to submission to the laboratory, that the laboratory aliquots taken for analysis are representative (i.e., oversized particles discarded, sample thoroughly mixed except when dealing with volatile organics), that the samples were analyzed within holding times, and that no cross-contamination has occurred based on the method blank results. Data comparability will be assessed based on analyses being performed within required holding times, by consistent methods, on consistent units of measure, and that

analyses were performed in strict adherence with NYSDEC and EPA analytical methods/protocols.

13.0 CORRECTIVE ACTIONS

The remedial investigation will be performed in accordance with the approved RI Work Plan, the contents of the approved FSP and the approved QAPP. Any persons identifying unacceptable conditions or deficiencies in the work being performed such as deviation from or omission of health and safety procedures, sampling procedures or other field procedures, will immediately notify the project field supervisor, where applicable, and the project manager. The unacceptable conditions or deficiencies will be documented and submitted to the project manager. The project manager, with assistance from the technical quality review staff, if necessary, will be responsible for developing and initiating appropriate corrective action, documenting the corrective action and verifying that the corrective action has been effective.

Depending on the significance and potential impact of the problem or deficiency requiring corrective action, the NYSDEC and Donnelly Industries, Inc. will be notified, as warranted, as soon as practical after becoming aware of the situation.

14.0 QUALITY ASSURANCE REPORTS TO MANAGEMENT

Field system audit/field reports from the project team, where applicable, will be submitted to the project manager on a bi-weekly basis at a minimum. The field report will include the project name, location, time, date, weather, temperature range, work in progress, conformance with schedule, persons present at the site (arrival and departure times), observations, work start-up and stoppage, items to verify, information or action required, any attachments identified, and the reporting persons signature. The field report notifies the management as to the progress, conformance with the work plan, and any problems that may affect quality control. Field personnel will also keep log books and field notebooks that will discuss day to day procedures followed, any problems encountered, etc. A copy of the field notes will be given to the project manager at least bi-weekly to keep the project manager informed of the project status and as a quality control check. The project manager will review the reports and field notes to assess the quality of the investigate data gathering efforts to make sure the objectives of the work are being met, to make sure the work is progressing on schedule, that the work is being conducted in accordance with the work plan, and that any problems encountered are addressed. These reports will be utilized in assessing the data quality with respect to field activities and the findings will be discussed in the RI Report where applicable.

Documentation of each phase of the project and all work tasks performed are kept in the file on the project. The documentation is available at all times for review by the Quality Assurance Officer, who will randomly check files for their completeness.

If any occurrences or conditions are encountered during the course of work that may require a change in the scope of work or departure from the approved work plan, the NYSDEC will be notified and the situation reported as soon as possible.

FIGURE 1

Project Organizational Chart

C.T. Male Project Organizational Chart

POULTNEY STREET PARTNERS LLC

Client/Requestor

David W. Roecker, P.E.
Project Principal

Kirk Moline, CEI, CES
Project Manager/ Hydrogeologist

Elizabeth W. Rovers, P.E.
Quality Assurance Officer

Jeffrey Marx, P.E.
Environmental Engineer

Stephen Bieber
Project Scientist

David Plante
Environmental Scientist/Permitting Specialist

Megan Drosky
Data Validator

Tim O'Neil
John Dippert
Dan Achtyl
(Geologist)
Field Technicians

Subconsultants & Contractors
- Laboratory Services
- Drilling Services
- Test Pit Services

APPENDIX A
Laboratory Certifications (Pending)

APPENDIX B

Data Validator Qualifications and Experience

Megan A. Drosky

Environmental Scientist/ Data Validator

Ms. Drosky joined C.T. Male in 2005. Her duties include the data validation and preparation of Data Usability Summary Reports (DUSR) for New York State Department of Environmental Conservation (NYSDEC) Brownfield Sites and NYS Superfund Sites, and validation of data for Inactive Hazardous Waste Sites, Landfill Closure and Post Closure Monitoring, and other groundwater monitoring sites, as well as the preparation of Environmental Site Assessments, groundwater investigations/remediation, tank closures, subsurface investigations and Brownfield projects.

Project Experience

Village of Saranac Lake – 400 Broadway Site, Saranac Lake, New York. Performed data validation on Environmental Restoration Program Remedial Investigation soil and groundwater samples following USEPA Region 2 Data Validation Guidelines and NYSDEC Appendix 2B of Draft DER-10 Guidelines, and prepared a DUSR for each data package.

Schuyler Heights Fire District, Watervliet, New York. Performed data validation on Environmental Restoration Program Remedial Investigation soil and groundwater samples following USEPA Region 2 Data Validation Guidelines and NYSDEC Appendix 2B of Draft DER-10 Guidelines, and prepared a DUSR for each data package.

Schenectady Metroplex Development Authority and the City of Schenectady – 314 Clinton Street Site and 312 Broadway Site, Schenectady, New York. Performed data validation on Environmental Restoration Program Remedial Investigation soil and groundwater samples following USEPA Region 2 Data Validation Guidelines and NYSDEC Appendix 2B of Draft DER-10 Guidelines, and prepared a DUSR for each data package for two sites.

National Semiconductor Corporation, Colonie, New York. Prepared a soil vapor intrusion evaluation and sampling plan and conducted soil vapor sampling.

Independent Leather Off-Site, Gloversville, New York. Performed data validation on Brownfield Cleanup Program Remedial Investigation soil samples following USEPA Region 2 Data Validation Guidelines and NYSDEC Appendix 2B of Draft DER-10 Guidelines, and prepared a DUSR for each data package.

Independent Leather, Gloversville, New York. Prepared sub-surface soil samples for laboratory analysis. Performed data validation on Brownfield Cleanup Program Remedial Investigation soil samples following USEPA Region 2 Data Validation Guidelines and NYSDEC Appendix 2B of Draft DER-10 Guidelines, and prepared a DUSR for each data package.

Town of Rotterdam C&D Debris Landfill, Rotterdam, New York. Assisted in the preparation of the Monitoring Reduction Request.

Site Assessments, Schenectady, New York. Conducted Phase I & Phase II Environmental Site Assessment within the City of Schenectady. The Phase II Environmental Site Assessments have included test borings, monitoring wells, and project reporting.

DPW, Bethlehem, New York. Prepared sub-surface soil and groundwater samples for laboratory analysis.

Megan A. Drosky

Environmental Scientist / Data Validator

Arthur Kill Correctional Facility Firing Range, Staten Island, New York. Performed data validation on Remedial Investigation lead soils samples following USEPA Region 2 Data Validation Guidelines and NYSDEC Appendix 2B of Draft DER-10 Guidelines, and prepared a DUSR for each data package.

Durkee Street – Parking Lot Site, Operable Units #1 and #2 Sites, Plattsburgh, New York. Performed data validation on Environmental Restoration Program Remedial Investigation soil vapor and soil samples following USEPA Region 2 Data Validation Guidelines and NYSDEC Appendix 2B of Draft DER-10 Guidelines, and prepared a DUSR for each data package.

Former CP Rail Yard, Plattsburgh, New York. Performed data validation on Brownfield Cleanup Program Remedial Investigation soil samples following USEPA Region 2 Data Validation Guidelines and NYSDEC Appendix 2B of Draft DER-10 Guidelines, and prepared a DUSR for each data package.

South Troy Industrial Park, Troy, New York. Performed data validation on Environmental Restoration Program Remedial Investigation soil samples following USEPA Region 2 Data Validation Guidelines and NYSDEC Appendix 2B of Draft DER-10 Guidelines, and prepared a DUSR for each data package.

Professional Background

- Environmental Scientist, URS Corporation, Morrisville, North Carolina, November 2003 – September 2005.
- Laboratory Technician, Wearcheck USA, Cary, North Carolina, October 2002 – November 2003.
- B.S. in Environmental Science, Long Island University at Southampton College, Southampton, New York, 2002.

Certifications

- OSHA 40-Hour Health and Safety Training Course, 2004
- 8-Hour Health and Safety Refresher Training, 2006
- 4 years prior work experience

APPENDIX C

Guidance for the Development of Data Usability Summary Reports

APPENDIX 2B

Guidance for the Development of Data Usability Summary Reports

Background:

The Data Usability Summary Report (DUSR) provides a thorough evaluation of analytical data without the costly and time consuming process of third party data validation. The primary objective of a DUSR is to determine whether or not the data, as presented, meets the site/project specific criteria for data quality and data use.

The DUSR and the data deliverables package will be reviewed by the DER Quality Assurance Unit. If data validation is found to be necessary (e.g. pending litigation) this can be carried out at a later date on the same data package used for the development of the DUSR.

Personnel Requirements:

The Environmental Scientist preparing the DUSR must hold a Bachelors Degree in a relevant natural or physical science or field of engineering and must submit a resume to the Division's Quality Assurance Unit documenting experience in environmental sampling, analysis and data review.

Preparation of a DUSR:

The DUSR is developed by reviewing and evaluating the analytical data package. During the course of this review the following questions must be asked and answered:

1. Is the data package complete as defined under the requirements forthe NYSDEC ASP Category B or USEPA CLP deliverables?

2. Have all holding times been met?

3. Do all the QC data: blanks, instrument tunings, calibration standards, calibration verifications, surrogate recoveries, spike recoveries, replicate analyses, laboratory controls and sample data fall within the protocol required limits and specifications?

4. Have all of the data been generated using established and agreed upon analytical protocols?

5. Does an evaluation of the raw data confirm the results provided in the data summary sheets and quality control verification forms?

6. Have the correct data qualifiers been used?

Evaluation of NYSDEC ASP Matrix Spike Blank (MSB) data - If the MSB recovery is less that the ASP criteria, the positive results should be qualified as J, estimated biased low. If the MSB recovery is less than the ASP criteria, but greater than 10%, the nondetects should be qualified J, biased low. If the MSB recovery is less than 10%, the nondetect data must be rejected.

Any Quality Control exceedances must be numerically specified in the DUSR and the corresponding QC summary sheet from the data package should be attached to the DUSR. All data that would be rejected by the EPA Region 2 Data Validation Guidelines must also be rejected in the DUSR.

Once the data package has been reviewed and the above questions asked and answered the DUSR proceeds to describe the samples and the analytical parameters. Data deficiencies, analytical protocol deviations and quality control problems are identified and their effect on the data is discussed. The DUSR shall also include recommendations on resampling/reanalysis. All data qualifications must be documented following the NYSDEC ASP '95 Rev. guidelines.

APPENDIX C

SITE SPECIFIC HEALTH AND SAFETY PLAN
OLD CHAMPLAIN MILL SITE
VILLAGE OF WHITEHALL
WASHINGTON COUNTY, NEW YORK

SITE SPECIFIC HEALTH AND SAFETY PLAN
OLD CHAMPLAIN MILL SITE
VILLAGE OF WHITEHALL
WASHINGTON COUNTY, NEW YORK

TABLE OF CONTENTS

Page

1.0 GENERAL....1
1.1 Overview....1
1.2 Contact Names & Numbers....2
2.0 HEATLH AND SAFETY PERSONNEL....4
3.0 SITE LOCATION AND DESCRIPTION....5
4.0 POTENTIAL SITE CONTAMINANTS....6
5.0 HAZARD ASSESSMENT....7
5.1 General....7
5.2 Site Survey....7
5.3 Subsurface Work....7
5.4 Fish and Wildlife Impact Analysis (FWIA)....8
5.5 Evaluation of Wetland Sediments and Surface Waters....8
5.6 Air Monitoring....8
5.7 Community Air Monitoring Plan....9
5.8 Hazard Identification and Control....9
6.0 TRAINING....14
7.0 SITE ACCESS....15
8.0 PERSONAL PROTECTION....17
8.1 Level of Protection....17
8.2 Safety Equipment....18
9.0 COMMUNICATIONS....19
10.0 DECONTAMINATION PROCEDURES....20
10.1 Personnel Decontamination Procedures....20
10.2 Equipment and Sample Containers Decontamination....20
11.0 EMERGENCY RESPONSE PROCEDURES....22
11.1 Personal Injury....22
11.2 Personal Exposure....22
11.3 Potential or Actual Fire or Explosion....23
11.4 Equipment Failure....23

SITE SPECIFIC HEALTH AND SAFETY PLAN
OLD CHAMPLAIN MILL SITE
VILLAGE OF WHITEHALL
WASHINGTON COUNTY, NEW YORK

TABLE OF CONTENTS (cont.)

Page

11.5 Spill Response....23
12.0 ADDITIONAL WORK PRACTICES....25
13.0 AUTHORIZATIONS....26
14.0 MEDICAL DATA SHEET....27
15.0 FIELD TEAM REVIEW....28

FIGURES

Figure 1: Map Showing Route to Glens Falls Hospital

APPENDICES

Appendix A: Training Certificates
Appendix B: Medical Data Sheets
Appendix C: Community Air Monitoring Plan

1.0 GENERAL

1.1 Overview

This Health and Safety Plan (HASP) has been prepared for use during implementation of the Remedial Investigation (RI) of the Old Champlain Mill Site ("the site") located at 16-50 Poultney Street in the Village of Whitehall, Washington County, New York. This HASP has been developed as an integral part of the RI Work Plan as prepared by C.T. Male Associates, P.C. The RI is being performed as part of the NYSDEC 1996 Clean Water/Clean Air Bond Act, Brownfield Cleanup Program.

A designated Health and Safety Officer (HSO) will be responsible for implementing this HASP during the completion of the field work. All persons or parties who enter the work area (support, decontamination, exclusion zone) must review, sign and comply with this HASP. A list of individuals authorized to enter the exclusion zone at the site is presented in Section 13.0 of this HASP. A copy of this HASP will be maintained at the work area throughout the duration of the project. A complete description of the RI work is presented in the RI Work Plan. A brief description of the proposed scope of work is outlined below:

Site Investigation:

- Site Reconnaissance;
- Test Pits;
- Surface Soil Sampling;
- Wetland Surface Water and Sediment Sampling;
- Site wide subsurface/hydrogeologic evaluation;
- Vapor Intrusion Assessment (if needed);
- Site boundary survey of existing conditions; and
- Fish and wildlife impact analysis;

1.2 Contact Names & Numbers

For this project, the following NYSDEC, Poultney Street Partners, LLC, Emergency Response names and telephone numbers are presented below as site contacts.

NYSDEC CONTACTS:

PROJECT MANAGER:	Alicia J. Thorne NYSDEC Region 5 Route 86, P.O. Box 296 Ray Brook, NY 12233	(518) 897-1200

POULTNEY STREET PARTNERS, LLC CONTACT:

CURRENT OWNER:	Mr. Rod Donnelly Poultney Street Partners, LLC 26 North Center Street Orange, New Jersey 07050	(973) 672-1800

NYSDOH CONTACT:

TECHNICAL LEAD:	To be Determined Bureau of Environmental Exposure Investigation New York State Department of Health 547 River Street Troy, New York 12180	(518) XXX-XXXX

CONSULTANT CONTACTS:

CONSULTING ENGINEER:	C.T. Male Associates, P.C. 50 Century Hill Drive Latham, NY 12110	(518) 786-7400
	David Roecker, Project Principal	(518) 786-7491
		Cell Phone: (518) 265-2117
	Kirk Moline, Project Manager	(518) 786-7502
		Cell Phone: (518) 265-1708
	Stephen Bieber, Health & Safety Officer	(518) 786-7495

EMERGENCY PHONE NUMBERS:

PERSONAL INJURY OR EMERGENCY:	Glens Falls Hospital 100 Park Street Glens Falls, NY 12801	(518) 962-1000
FIRE DEPARTMENT:	Emergency	911
	Whitehall Volunteer Fire Co. 161 Main Street Whitehall, NY 12887	(518) 499-0720
POLICE:	Emergency	911
	Whitehall Police Department 8 Montcalm Avenue Whitehall, NY 12887	(518) 747-3325
	Emergency	911
	NYS Troopers Barracks Route 40, P.O. Box 130 Granville, NY 12854	(518) 642-9455
UPSTATE NEW YORK REGIONAL POISON CONTROL CENTER:	University Hospital Upstate Medical University SUNY Health Science Center 750 East Adams Street Syracuse, NY 13201	(800) 222-1222
NATIONAL RESPONSE CENTER:	c/o United States Coast Guard (G-OPF) 2100 2nd Street, Southwest - Room 2611 Washington, DC 20593-0001	(800) 424-8802
NYSDEC SPILL HOTLINE:		(800) 457-7362

2.0 HEATLH AND SAFETY PERSONNEL

The Health and Safety Officer (HSO) will be responsible for implementation of the HASP and the delegation of health and safety duties. The HSO will coordinate the resolution of safety issues that arise during site work. When field operations require Level D protection, it will not be necessary for the HSO to be present on-site at all times. When the HSO is not present on-site, a designee will be authorized to perform the duties of the HSO. The designee will be responsible for implementation of the HASP.

The HSO or designee has stop work authorization which the HSO or designee will execute upon the HSO or designee's determination of an eminent safety hazard, emergency situation or other potentially dangerous situations (e.g. weather conditions), when this action is deemed appropriate. Authorization to resume work will be issued by the HSO.

3.0 SITE LOCATION AND DESCRIPTION

The Site is located at 16-50 Poultney Street in the Village of Whitehall, Washington County, New York. The Site consists of an approximate 11.49 acre parcel of land that was formerly employed for manufacturing purposes, but is now idle. The site is relatively flat and contains the concrete slab remnants of the former manufacturing building and boiler house. The Site is currently owned by Poultney Street Partners, LLC. A more detailed site description is presented in the RI Work Plan.

4.0 POTENTIAL SITE CONTAMINANTS

Petroleum fuels, solvents, PCBs, dyes, paints and heavy metals may have been used in association with past manufacturing uses of the site.

5.0 HAZARD ASSESSMENT

5.1 General

The hazard assessment, use of specific protective equipment, and monitoring associated with each field work task of the investigation and remedial work to be conducted at the subject site are presented in following subsections.

For this project, C.T. Male will be subcontracting portions of the site investigation and/or remedial activities. Each subcontractor will be responsible for developing and implementing a site specific health and safety plan for their activities, for protection of their employees, and use of personal protective equipment. The subcontractor will also be responsible for developing and following their own Respiratory Protection Program, as applicable.

5.2 Site Survey

The site survey will be performed by a two man crew and their work will not be intrusive. Therefore, exposure to potential site contaminants is considered remote. The potential hazards to the survey crew will include slip and fall hazards from poor terrain, cuts from improper use of vegetation cutting tools, and the possibility of skin and eye damage from walking through brush. To protect against these potential hazards, any personnel completing this work should wear, at a minimum, safety glasses, leather gloves, steel-toe boots, and full length pants.

5.3 Subsurface Work

Exploratory test pits, as well as soil test borings (including the installation of monitoring wells) are planned to be advanced across the site for more than one field task. The potential hazards to personnel during this work are dermal contact and a low potential for vapor inhalation of both existing and potential site contaminants. Level D protection should be sufficient to protect against dermal contact during excavation of and/or handling of the subsurface soils and groundwater. If organic vapors are present at the action levels described in Section 5.6, on the basis of organic vapor monitoring of the area during the work, it may be necessary to upgrade to Level C respiratory protection.

5.4 Fish and Wildlife Impact Analysis (FWIA)

The FWIA involves walking the property and assessing the current vegetative and drainage features. The potential hazards are slip and fall hazards from poor terrain and the possibility of skin and eye damage from walking through brush. To protect against these potential hazards, personnel completing this work should wear Level D protection and, at a minimum, safety glasses, leather gloves, steel-toe boots, and full length pants.

5.5 Evaluation of Wetland Sediments and Surface Waters

Sediment and surface water samples will be collected from four (4) on-site wetlands. Potential hazards for these sampling tasks include dermal contact with potential site contaminants and the potential for drowning. Level D protection should provide sufficient protection from dermal contact. If a boat is used to collect these samples, life preservers and the buddy system must be used to reduce the risk of drowning.

5.6 Air Monitoring

During the completion of test pits and test borings, the ambient air in the work area will be monitored with a photoionization detection meter (total volatile compound - MiniRAE 2000) prior to the start of work and periodically as conditions warrant. If a concentration of 10 ppm (sustained for 5 minutes) of total volatile compounds is detected within the work area on the instrument, relative to an isobutylene standard (used to calibrate the instrument), work will cease immediately and the workers shall shut down equipment and leave the area immediately. The level of personal protective equipment (PPE) protection will be evaluated prior to continuing work. If a PPE upgrade to Level C is required, it will include: a half face air purifying respirator equipped with combination organic vapor and particulate cartridges for 10-15 ppm exposure levels; and a full-face air purifying respirator for greater than 15 ppm to less than 50 ppm exposure levels, prior to continuing work. If a concentration greater than 50 ppm is encountered, work will cease immediately and the situation will be evaluated prior to continuation of work. Table 1 summarizes the action levels relative to the required respiratory protection.

Table 1 C.T. Male Action Levels & Required Respiratory Protection		
Action Level	**Level of PPE**	**Type of Respiratory Protection**
0-10 parts per million	Level D	No respiratory protection
10-15 parts per million	Level C	Negative pressure half-face respirator
15-50 parts per million	Level C	Positive pressure full-face respirator
Greater than 50	Cease Work	Evaluate work procedures

-Facial hair is not permitted while wearing most respirators.

-Workers required to wear a respirator must have a minimum of OSHA 40 Hour training with current medical monitoring and fit test documentation.

5.7 Community Air Monitoring Plan

A site specific Community Air Monitoring Plan (CAMP) will be followed for the project on the basis of the New York State Department of Health Generic Community Air Monitoring Plan dated June 2000 (Appendix C).

5.8 Hazard Identification and Control

The following table presents generalized hazards potentially involved with the tasks to be completed on this project. Table 2 identifies general procedures to follow to prevent or reduce accident, injury or illness. Any worker on-site who identifies a potential hazard must report the condition to the HSO or designee, and initiate control of the hazardous condition.

Table 2 **Potential Hazards and Control**	
Potential Hazard	**Control**
Vehicular Traffic	1. Wear safety vest when vehicular hazards exist. 2. Use cones, flags, barricades, and caution tape to define work area. 3. Use vehicle to block work area. 4. Contact police for high traffic situations.
Slip, Trip, and Fall Protection	1. Assess work area to determine if there is a potential for falling. 2. Make sure work area is neat and tools are staged in one general area.

Table 2 Potential Hazards and Control	
Potential Hazard	**Control**
	3. Wear steel-toe boots with adequate tread and always watch where the individual is walking. Carry flashlight when walking in poorly lighted areas.
Inclement Weather	1. Stop outdoor work during electrical storms and other extreme weather conditions such as extreme heat or cold temperatures. 2. Take cover indoors or in vehicle. 3. Listen to local forecasts for warnings about specific weather hazards such as tornadoes, hurricanes, and flash floods.
Utility Lines Contact	1. Contact UFPO to have utility lines marked prior to any underground excavation or drilling. UFPO must be contacted at least 72 hours prior to work. 2. Refer to site drawings for utility locations. 3. Manually dig 3 to 5 feet below grade and 5 feet on each side of utility marked to avoid breaking utility lines.
Noise	1. Wear hearing protection when equipment such as a drill rig, excavator, jackhammer, or other heavy equipment is operating on-site. 2. Wear hearing protection whenever you need to raise your voice above normal conversational speech due to a loud noise source; this much noise indicates the need for protection. 3. Hearing protection is required when measured sound exceeds 85 decibels (dB) where employees stand or conduct work.
Electrical Shock	1. Maintain appropriate distance between heavy equipment and overhead utilities; 20 foot minimum clearance from power lines; and 10 foot minimum clearance from shielded power lines. 2. Contact local underground utility locating service prior to penetrating the ground surface.

Table 2 Potential Hazards and Control	
Potential Hazard	**Control**
Physical Injury	1. Wear hard hats and safety glasses at all times when on-site. 2. Maintain visual contact with equipment operators and wear orange safety vest when heavy equipment is operating on-site. 3. Avoid loose clothing when working around rotary equipment. 4. Keep hands and feet away from drilling augers and excavation equipment tracks/tires. 5. Test emergency shut-off switches on drill rigs and excavation equipment regularly.
Back Injury	1. Use a mechanical lifting device or a lifting aid where appropriate. 2. Make sure the route is free of obstructions. 3. Bend at the knees and use leg muscles when lifting. 4. Use the buddy system if lifting heavy or awkward objects. 5. Do not twist or jerk your body when lifting.
Heat Stress	1. Increase water intake while working. 2. Avoid excessive alcohol intake the night before working in heat stress situations. 3. Increase number of rest breaks as necessary, and rest in a shaded area. 4. Watch for signs and symptoms of heat exhaustion and fatigue. 5. Rest in cool, dry areas. 6. In the event of heat stress or heat stroke, bring the victim to a cool environment and call 911.
Fire Control	1. Smoke only in designated areas. 2. Keep flammable liquids in closed containers. 3. Isolate flammable and combustible materials from ignition sources. 4. Keep fire extinguisher nearby and use only if deemed safe.

Table 2 Potential Hazards and Control	
Potential Hazard	**Control**
Media Sampling (water, soil, sediment, etc.)	1. Wear appropriate PPE to avoid skin, eye, and inhalation contact with contaminated media. 2. Stand upwind to minimize possible inhalation exposure, especially when opening monitoring wells or closed containers/vessels. 3. Conduct air monitoring, whenever necessary to determine level of respiratory protection. 4. If necessary, employ engineering controls to assist in controlling chemical vapors.
Cleaning Equipment	1. Wear appropriate PPE to avoid skin and eye contact with isopropyl alcohol, alconox, or other cleaning materials. 2. Stand upwind to minimize possible inhalation exposure. 3. Properly dispose of spent chemical cleaning solutions and rinse accordingly.
Poor Structural Building Condition	1. Assess building condition prior to entering and note where exit points are at all times. 2. Be cautious when walking inside the building. Always look for holes in the floors or hanging debris which could cause injury. 3. Carry a high power flashlight and use as necessary in low light areas. 4. If working in the building, make sure work area is neat and tools are staged in one general area. 5. Wear steel-toe boots with adequate tread. 6. Try to employ the buddy system so someone knows what part of the building individuals are in.
Deer Ticks	1. Wear pants and long sleeve shirts 2. Perform personal body checks for the presence of ticks 3. Notify the Health and Safety Officer immediately if you have been bitten by a tick and contact your physician.
Note: A first aid kit and fire extinguisher will be located in the C.T. Male company vehicle.	

Response actions to personal exposure from on-site contaminants include skin contact, eye contact, inhalation, ingestion, and puncture or laceration. The recommended response actions are presented in Section 11.2.

6.0 TRAINING

Site specific training of workers and personnel will be conducted and provided by the HSO or designee prior to any on-site activity. The training will specifically address the activities, procedures, monitoring and equipment for the site operations. It will include area and facility layout, hazards, emergency services (police, hospital, fire, etc.), and review of this HASP. Questions by workers, field personnel, etc. will be addressed at this time.

Workers and personnel conducting and/or supervising the project must have attended and successfully completed a 40 Hour Health and Safety Training Course for Hazardous Waste Operations, an annual 8 hour Refresher Course, and take part in an employer medical surveillance program in accordance with OSHA 1910.120 requirements, specifically, that the workers have had a medical physical within one (1) year prior to the date the work begins and that they are physically able to wear a respirator.

Documentation of training and medical surveillance will be submitted to the HSO or designee prior to the start of any on-site work. A copy of the training certificates shall be inserted into the pocket of this HASP in Appendix A.

7.0 SITE ACCESS

The site investigation and remediation work will be generally performed within the site boundaries. Due to the site location, it is unlikely that the public or curious bystanders will be present at the time of the work. Nevertheless, the work area will be considered as a 20 foot radius around the work activity being performed. Only OSHA trained individuals which are qualified to do the work and have read and signed this site specific HASP will be allowed within the 20 foot radius work zone. The work area will be secured with traffic cones and/or flagging to prevent unauthorized entry. The HSO or designee will be responsible for limiting access to unauthorized individuals.

During completion of the site investigation and remediation activities, a 20 foot circle around the immediate work area will be considered the Exclusion Zone (contaminated area where investigation/remedial work is to be conducted). The Contamination Reduction Zone (decontamination area), and Support Zone (clean area, everywhere else) will be established outside the Exclusion Zone, as necessary. The exclusion, contamination reduction, and support zone during investigation/remediation work have been identified and designated as follows:

Exclusion Zone - The location of the exclusion zone will be determined in the field prior to the start of work and will vary depending on the work activities conducted. For the most part, the exclusion zone is anticipated to be a 20 foot radius around the work area. The outside exclusion zones may be delineated with cones and yellow caution tape or equal method, where applicable. Only authorized persons with proper training and protective gear will be allowed to enter the exclusion zone. If the exclusion zones, as previously explained, changes orientation during the completion of the work, the HASP will be amended in the field to reflect the change.

Contamination Reduction Zone – If applicable, this zone will generally be a 10'± x 10'± area, marked off with stakes and blue and white colored flagging or equal method, containing the decontamination pad. The location will be determined in the field prior to the start of work and will vary depending on the area(s) the work is being conducted. This zone is where decontamination of personnel and

equipment will take place, as necessary, on the basis of the work being performed. It will be located upwind of the Exclusion Zone, if possible.

Support Zone - Area outside of contamination reduction zone and not including the exclusion zone. Unauthorized or untrained individuals must remain in this zone.

8.0 PERSONAL PROTECTION

8.1 Level of Protection

Based on evaluation of the potential hazards, the minimum level of protection to be worn by workers during implementation of the site investigation and remediation activities is defined as Level D protection, and will be controlled by the HSO or designee.

The minimum level D protective equipment will consist of field clothes, rubber gloves, hard hats, safety glasses, and safety boots (steel-toe preferred). As appropriate, this level of protection may be modified to include polylaminated Tyvek suits, coveralls, leg chaps, or face shield for additional protection. Both full-face and half-face air purifying respirators should be readily available. Appropriate combination organic vapor and particulate cartridge filters will be available at the site, to use, if necessary with the air purifying respirators.

If required, level C protective equipment will consist of the items listed for Level D protection with the added protection of full-face, air purifying (organic vapor and particulate) respirator, chemical resistant clothing, inner and outer chemically resistant gloves (i.e. solvent resistant nitrile, PVC/nitrile), and chemical resistant safety boots/shoes.

Level B is not anticipated, but if required, level B protective equipment will consist of the items listed for Level D protection except a self-contained breathing apparatus (SCBA) will be worn dependent on the level of contaminants present in the work zone, and polylaminated Tyvek suits will be required. When site conditions warrant the need for level B protective equipment, work will cease and the project will be re-evaluated to determine the necessity for employing engineering controls to reduce or eliminate the potential contaminants of concern.

8.2 Safety Equipment

Basic emergency and first aid equipment will be available at an area within the Support Zone clearly marked and available or within C.T. Male's company vehicle. This shall include a first aid kit, fire extinguisher, supply of potable water, soap and towels. The HSO or designee shall be equipped with a cellular phone in case of emergencies. If the cellular phone is not available, or is inoperable, a pay phone in the immediate vicinity will be used.

9.0 COMMUNICATIONS

There are no existing phone services associated with the subject site. The HSO or designee shall be equipped with a cellular phone in case of emergencies. If the cellular phone is not available, or is inoperable, a pay phone in the immediate vicinity will be used. The HSO or designee shall notify the C.T. Male project manager as soon as safely possible in the event of an accident, injury or emergency action.

Hand signals for certain work tasks will be employed, as necessary, and the buddy system will be employed during excavation, drilling and sampling activities.

10.0 DECONTAMINATION PROCEDURES

10.1 Personnel Decontamination Procedures

Decontamination procedures will be carried out by all personnel leaving the Exclusion Zone (except under emergency evacuation). The amount of decontamination performed will be dependent on the level of personal protection currently being worn within the exclusion zone.

1. Do not remove respiratory protection until all steps have been completed.
2. Clean outer protective gloves and outer boots, if worn, with water (preferably with a pressurized washer) over designated wash tubs in the exclusion zone to remove the gross amount of contamination.
3. Deposit equipment used (tools, sampling devices, and containers) at designated drop stations - on plastic drop sheets or in plastic lined containers.
4. Rinse outer boots if worn and gloves with clean water in designated rinse tubs. Remove outer boots if worn and gloves and deposit in designated area to be determined in the field for use the next day or when necessary. If disposable outer boots are worn, remove and discard in designated container.
5. Remove hard hat & safety glasses, rinse with clean water as necessary and deposit in designated area for use the next day or when necessary.
6. Remove Tyvek suit, if worn, and discard in designated container. Remove respirator at this time, if used; wash and rinse with clean water. Organic vapor cartridges, when used, will be replaced daily. Used cartridges will be discarded in the designated waste container. Remove inner gloves and discard in designated container.

10.2 Equipment and Sample Containers Decontamination

All decontamination will be completed by personnel in protective gear appropriate for the level of protection determined by the site HSO or designee. Manual

sampling equipment including trowels, hand augers and macro-core samplers, shovels and split-spoon samplers which come into contact with the site's soils, will be cleaned with a tap water/detergent wash and a tap water rinse. The sampling equipment will be washed after each sample is collected and the wash and rinse water will be allowed to infiltrate the site's soils at each sampling point.

Larger excavation equipment (i.e., rubber-tire backhoe or track excavator) which comes into contact with the site's soils will be decontaminated with a high pressure/hot water wash. The decontamination procedure will focus on portions of the equipment that has come into contact with the site's soils such as the bucket. The cleaning will be performed at the completion of each test pit and the used cleaning liquids will be stored in 55-gallon drums pending analytical results of the sampled soils.

Drill rig equipment (i.e., augers) which comes into contact with the site's soils will be decontaminated with a high pressure/hot water wash. The decontamination procedure will focus on portions of the equipment that has come into contact with the site's soils such as the augers and drill bits. The cleaning will be performed at the completion of each boring location and the used cleaning liquids will be stored in 55-gallon drums pending analytical results of the sampled soils and groundwater.

Exterior surfaces of sample containers will be wiped clean with disposable wipes in the decontamination zone and transferred to a clean cooler for transportation or shipment to the analytical laboratory. Sample identities will be noted and checked off against the chain-of-custody record. The disposable wipes will be placed in the designated disposal container and disposed of as solid waste.

11.0 EMERGENCY RESPONSE PROCEDURES

THE PROJECT EMERGENCY COORDINATOR IS:

Site Health and Safety Officer (HSO) Stephen Bieber

The following standard emergency procedures will be used by on-site personnel. The Project Manager and HSO shall be notified of any on-site emergencies and be responsible for assuring that the appropriate procedures are followed.

11.1 Personal Injury

Emergency first aid shall be administered on-site as deemed necessary and only by a trained individual, if available at the site. If a trained individual is not available on-site, decontaminate, if feasible, and transport individual to nearest medical facility (Glens Falls Hospital). The HSO will supply medical data sheets to appropriate medical personnel and be responsible for completing the incident report. If the HSO is injured or controlling the emergency situation, the medical data sheets are available in Appendix B of this Health and Safety Plan.

11.2 Personal Exposure

The recommended response to worker exposure from contaminants on-site includes the following:

SKIN CONTACT: Use generous amounts of soap and water. Wash/rinse affected area thoroughly, then provide appropriate medical attention, as necessary.

EYE CONTACT: Wash eyes thoroughly with potable water supply provided on site. Eyes should be rinsed for at least 15 minutes subsequent to chemical contamination. Provide medical attention, as necessary.

INHALATION: Move worker to fresh air and outside of the work zone and/or, if necessary, decontaminate and transport to hospital (Glens Falls Hospital). If respirator use is implemented at the time of

inhalation, worker must not remove respirator until completely away from the work zone.

INGESTION: Decontaminate, if feasible, and transport to hospital (Glens Falls Hospital).

PUNCTURE WOUND OR
LACERATION: Provide first aid at the site and if wound needs medical attention, decontaminate, if feasible, and transport to hospital (Glens Falls Hospital).

If the affected worker is exposed to contaminants on-site and the injury or accident prevents decontamination of the individual, the emergency responders must be notified of this condition and the exposure must be kept to a minimum.

11.3 Potential or Actual Fire or Explosion

Immediately evacuate area in the event of potential or actual fire or explosion. Notify the local fire and police departments, and other appropriate emergency response groups, as listed in Section 1.2. Perform off-site decontamination and contain wastes for proper disposal. If a fire or explosion occurs, all on-site personnel must meet in the designated area of the site (established by the HSO or designee) for an accurate head count.

11.4 Equipment Failure

Should there be any equipment failure, breakdown, etc. the Project Manager and HSO shall be contacted immediately. The Project Manager or the HSO will make every effort to replace or repair the equipment in a timely manner.

11.5 Spill Response

The site HSO or designee shall initiate a corrective action program with the subcontractors in the event of an accidental release of a hazardous material or suspected hazardous material. The HSO or designee will act as the Emergency Coordinator with the subcontractors for the purposes of: spill prevention; identifying releases; implementing clean up measures; and notification of appropriate personnel.

The corrective action program will be implemented by the HSO and subcontractor to effectively control and minimize any impact accidental releases may have to the environment.

Effective control measures will include:

- Preliminary assessment of the release
- Control of the release source
- Containment of the released material
- Effective clean-up of the released material

Potential sources of accidental releases include: hydraulic oil spills or petroleum leaks from heavy equipment; cooling oils (potentially PCB containing) for electrical equipment handling and cleaning; and spills from drums, vats, vessels, and tanks. The HSO/Emergency Coordinator in conjunction with the subcontractor shall respond to an accidental release in the following manner:

- Identify the character, source, amount and area affected by the release.
- Have subcontractor take all reasonable steps to control the release.
- Notify the NYSDEC Spill Hotline at 1-800-457-7362. Notify NYSDEC Project Manager Alicia Thorne and Poultney Street Partners, LLC
- Contain the release with sorbent material which should include speedi-dry, spill socks and sorbent pads.
- Prevent the release from entering sensitive receptors (i.e., catch basins and surface water) using the specified sorbent material or sandbags.
- Coordinate cleanup of the released material.
- Oversee proper handling and storage of contaminated material for disposal.

At no time should personal health or safety be compromised or jeopardized in an attempt to control a release. All health and safety measures as outlined in this HASP should be adhered to.

12.0 ADDITIONAL WORK PRACTICES

Workers will be expected to adhere to the established safety practices. Work on the project will be conducted according to established protocol and guidelines for the safety and health of all involved. The following will be adhered to:

- Employ the buddy system when possible, and for those work tasks which require it. Establish and maintain communications.
- Minimize contact with potentially contaminated soil, sediment and water.
- Employ disposable items when possible to minimize risks during decontamination and possible cross-contamination during sample handling.
- Smoking, eating, or drinking after entering the work zone and before decontamination will not be allowed (to prevent oral ingestion of potential on-site contaminants).
- Avoid heat and other work stress related to wearing personal protective equipment. Take breaks as necessary and drink plenty of fluids to prevent dehydration.
- Withdrawal from a suspected or actual hazardous situation to reassess procedures is the preferred course of action.
- The removal of facial hair (except mustaches) prior to working on-site will be required to allow for a proper respiratory face piece fit.
- The Project Manager, the HSO, and sampling personnel shall maintain records recording daily activities, meetings, facts, incidents, data, etc. relating to the project. These records will remain at the project site during the full duration of the project so that replacement personnel may add information while maintaining continuity. These daily records will become part of the permanent project file.

13.0 AUTHORIZATIONS

Personnel authorized to enter the exclusion zone at the Environmental Restoration Project being conducted at the Old Champlain Mill Site located at 16-50 Poultney Street in the Village of Whitehall, Washington County, New York while operations are being conducted must be certified by the HSO. Authorization will involve completion of appropriate training courses and review and sign off of this HASP.

Personnel authorized to perform work on-site are as follows:

1. Kirk Moline C.T. Male
2. Stephen H. Bieber C.T. Male
3. Jeffrey Marx C.T. Male
4. Dan Achtyl C.T. Male
5. John Dippert C.T. Male
6. Tim O'Neil C.T. Male
7. John Favreau C.T. Male
8. _____
9. _____
10. _____
11. _____
12. _____
13. _____
14. _____
15. _____
16. _____
17. _____

14.0 MEDICAL DATA SHEET

This medical data sheet will be completed by all on-site personnel and will be kept on-site during the duration of the project. This data sheet will accompany any personnel when medical assistance is needed or if transport to hospital facilities is required.

PROJECT: Brownfield Cleanup Program to be conducted at the Old Champlain Mill Site Located at 16-50 Poultney Street in the Village of Whitehall, Washington County, New York.

Name _____ Home Telephone _____

Address _____

Emergency Contact _____

Drug or Other Allergies _____

Particular Sensitivities _____

Do You Wear Contact Lenses _____

Provide a Checklist of Previous Illness or Exposure to Hazardous Chemicals

_____

What Medications Are You Presently Using _____

_____

Do You Have Any Physical or Medical Restrictions _____

_____

Are You Qualified to Wear Respirator (Provide Fit Test Results)_____

Name, Address, and Telephone Number of Personal Physician:

_____

_____

_____

15.0 FIELD TEAM REVIEW

Each field team member shall sign this section after site specific training is completed and before being permitted to work on-site.

I have read and understood this Site Specific Health and Safety Plan, and I will comply with the provisions contained therein.

PROJECT: Brownfield Cleanup Program
Old Champlain Mill Site
16-50 Poultney Street
Village of Whitehall, Washington County, New York

Name: Printed	Signature	Date

FIGURE 1

MAP SHOWING ROUTE TO GLENS FALLS HOSPITAL

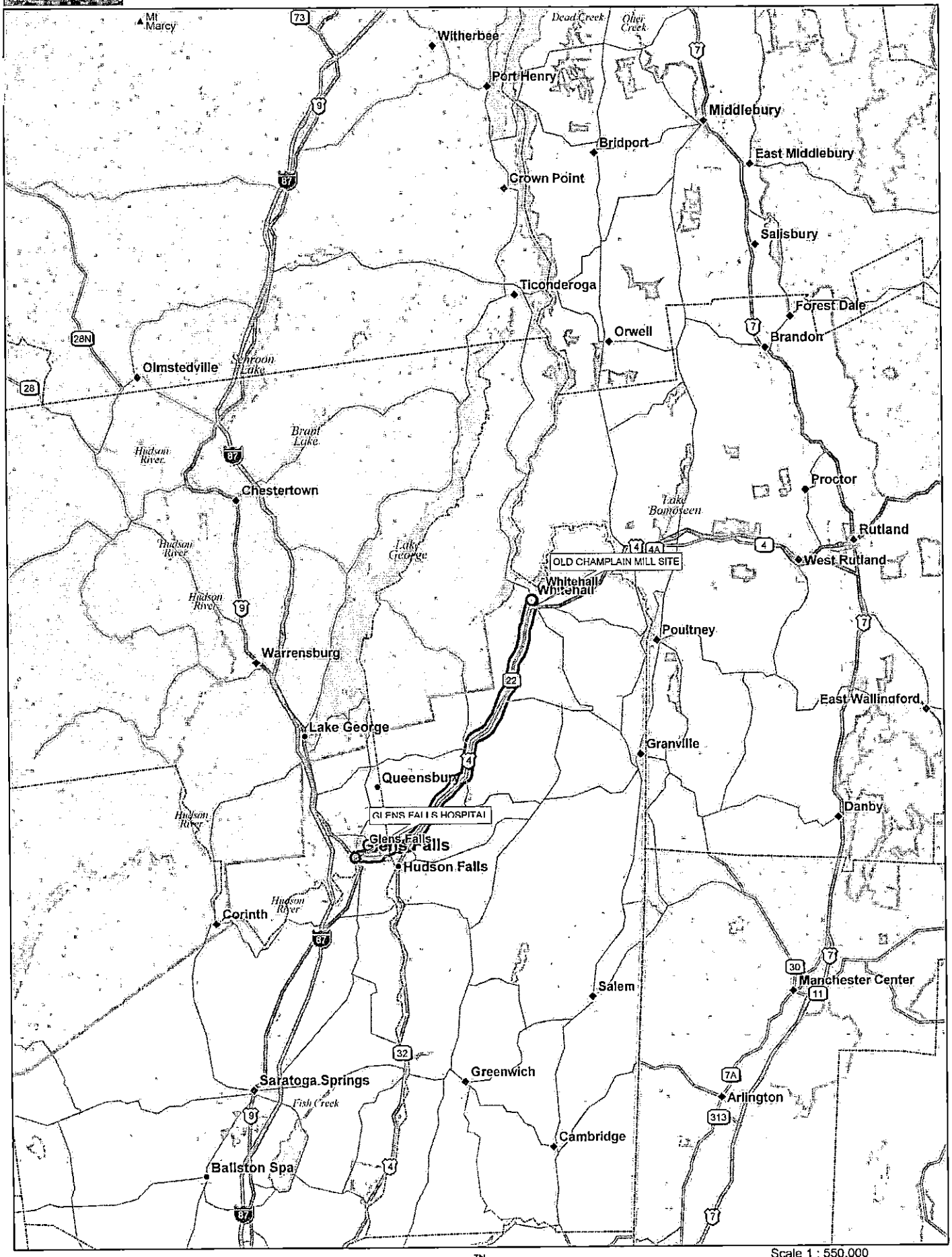

Data use subject to license.

© 2004 DeLorme. Street Atlas USA® 2005.

www.delorme.com

TN

MN (14.4°W)

Scale 1 : 550,000

1" = 8.68 mi

Data Zoom 8-5

APPENDIX A

TRAINING CERTIFICATES

CERTIFICATE OF ACHIEVEMENT

This certifies that

Kirk Moline

has successfully completed the

8 Hour Health & Safety Refresher Training for Hazardous Waste Site Activities per 29 CFR 1910.120 (HAZWOPER)

conducted by
ATC Associates Inc.
73 William Franks Drive
West Springfield, MA 01089
(413) 781-0070

Principal Instructor

December 7, 2006
Date of Course

December 7, 2007
Expiration Date

Regional Manager

8HMR-12047
Certificate Number

Not Applicable
Examination Date

CERTIFICATE OF ACHIEVEMENT

This certifies that

Stephen Bieber

has successfully completed the

8 Hour Health & Safety Refresher Training for Hazardous Waste Site Activities per 29 CFR 1910.120 (HAZWOPER)

conducted by
ATC Associates Inc.
73 William Franks Drive
West Springfield, MA 01089
(413) 781-0070

Principal Instructor

February 8, 2007
Date of Course

February 8, 2008
Expiration Date

Regional Manager

8HMR-12179
Certificate Number

Not Applicable
Examination Date

CERTIFICATE OF ACHIEVEMENT

This certifies that

Jeffrey A. Marx

has successfully completed the

8 Hour Health & Safety Refresher Training for Hazardous Waste Site Activities per 29 CFR 1910.120 (HAZWOPER)

conducted by
ATC Associates Inc.
73 William Franks Drive
West Springfield, MA 01089
(413) 781-0070

Principal Instructor

February 8, 2007
Date of Course

February 8, 2008
Expiration Date

Regional Manager

8HMR-12174
Certificate Number

Not Applicable
Examination Date

CERTIFICATE OF ACHIEVEMENT

This certifies that

John L. Favreau

has successfully completed the

8 Hour Health & Safety Refresher Training for Hazardous Waste Site Activities per 29 CFR 1910.120 (HAZWOPER)

conducted by
ATC Associates Inc.
73 William Franks Drive
West Springfield, MA 01089
(413) 781-0070

Principal Instructor

September 6, 2007
Date of Course

September 6, 2008
Expiration Date

Gregory J. Mirosch
Regional Manager

8HMR-13330
Certificate Number

Not Applicable
Examination Date

CERTIFICATE OF ACHIEVEMENT

This certifies that

Daniel Achtyl

has successfully completed the

8 Hour Health & Safety Refresher Training for Hazardous Waste Site Activities per 29 CFR 1910.120 (HAZWOPER)

conducted by
ATC Associates Inc.
73 William Franks Drive
West Springfield, MA 01089
(413) 781-0070

Principal Instructor

October 4, 2007
Date of Course

October 4, 2008
Expiration Date

Regional Manager

8HMR-13353
Certificate Number

Not Applicable
Examination Date

OHI

OccuHealth, Inc.
44 Wood Avenue
Mansfield, MA 02048

THIS IS TO CERTIFY THAT Timothy M. O'Neill

HAS COMPLETED THE EIGHT HOUR REFRESHER TRAINING REQUIREMENT UNDER OSHA STANDARD 29 CFR 1910-120 FOR HAZARDOUS WASTE SITE OPERATIONS.

5/18/07
DATE

Thomas E Hamilton
THOMAS E. HAMILTON, CIH

CERTIFICATE OF COMPLETION

This is to certify that

Jon Dippert

Has successfully completed
Hazardous Materials Site Work Refresher
29 CFR 1910.120(e)(8) and 1926.65(e)(8)

John T. Myska
Senior Health & Safety Project Engineer
April 9, 2007

APPENDIX B

MEDICAL DATA SHEETS

14.0 MEDICAL DATA SHEET

This medical data sheet will be completed by all on-site personnel and will be kept on-site during the duration of the project. This data sheet will accompany any personnel when medical assistance is needed or if transport to hospital facilities is required.

PROJECT: Brownfield Cleanup Program to be conducted at the Old Champlain Mill Site Located at 16-50 Poultney Street in the Village of Whitehall, Washington County, New York.

Name _____ Home Telephone _____

Address _____

Emergency Contact _____

Drug or Other Allergies _____

Particular Sensitivities _____

Do You Wear Contact Lenses _____

Provide a Checklist of Previous Illness or Exposure to Hazardous Chemicals

_____

What Medications Are You Presently Using _____

_____

Do You Have Any Physical or Medical Restrictions _____

_____

Are You Qualified to Wear Respirator (Provide Fit Test Results)_____

Name, Address, and Telephone Number of Personal Physician:

_____

_____

_____

14.0 MEDICAL DATA SHEET

This medical data sheet will be completed by all on-site personnel and will be kept on-site during the duration of the project. This data sheet will accompany any personnel when medical assistance is needed or if transport to hospital facilities is required.

PROJECT: Brownfield Cleanup Program to be conducted at the Old Champlain Mill Site Located at 16-50 Poultney Street in the Village of Whitehall, Washington County, New York.

Name _____ Home Telephone _____

Address _____

Emergency Contact _____

Drug or Other Allergies _____

Particular Sensitivities _____

Do You Wear Contact Lenses _____

Provide a Checklist of Previous Illness or Exposure to Hazardous Chemicals

_____

What Medications Are You Presently Using _____

_____

Do You Have Any Physical or Medical Restrictions _____

_____

Are You Qualified to Wear Respirator (Provide Fit Test Results)_____

Name, Address, and Telephone Number of Personal Physician:

_____

_____

_____

14.0 MEDICAL DATA SHEET

This medical data sheet will be completed by all on-site personnel and will be kept on-site during the duration of the project. This data sheet will accompany any personnel when medical assistance is needed or if transport to hospital facilities is required.

PROJECT: Brownfield Cleanup Program to be conducted at the Old Champlain Mill Site Located at 16-50 Poultney Street in the Village of Whitehall, Washington County, New York.

Name _____ Home Telephone _____

Address _____

Emergency Contact _____

Drug or Other Allergies _____

Particular Sensitivities _____

Do You Wear Contact Lenses _____

Provide a Checklist of Previous Illness or Exposure to Hazardous Chemicals

_____

What Medications Are You Presently Using _____

_____

Do You Have Any Physical or Medical Restrictions _____

_____

Are You Qualified to Wear Respirator (Provide Fit Test Results)_____

Name, Address, and Telephone Number of Personal Physician:

_____

_____

_____

14.0 MEDICAL DATA SHEET

This medical data sheet will be completed by all on-site personnel and will be kept on-site during the duration of the project. This data sheet will accompany any personnel when medical assistance is needed or if transport to hospital facilities is required.

PROJECT: Brownfield Cleanup Program to be conducted at the Old Champlain Mill Site Located at 16-50 Poultney Street in the Village of Whitehall, Washington County, New York.

Name _____ Home Telephone _____

Address _____

Emergency Contact _____

Drug or Other Allergies _____

Particular Sensitivities _____

Do You Wear Contact Lenses _____

Provide a Checklist of Previous Illness or Exposure to Hazardous Chemicals

_____

What Medications Are You Presently Using _____

_____

Do You Have Any Physical or Medical Restrictions _____

_____

Are You Qualified to Wear Respirator (Provide Fit Test Results)_____

Name, Address, and Telephone Number of Personal Physician:

_____

_____

_____

14.0 MEDICAL DATA SHEET

This medical data sheet will be completed by all on-site personnel and will be kept on-site during the duration of the project. This data sheet will accompany any personnel when medical assistance is needed or if transport to hospital facilities is required.

PROJECT: Brownfield Cleanup Program to be conducted at the Old Champlain Mill Site Located at 16-50 Poultney Street in the Village of Whitehall, Washington County, New York.

Name _____ Home Telephone _____

Address _____

Emergency Contact _____

Drug or Other Allergies _____

Particular Sensitivities _____

Do You Wear Contact Lenses _____

Provide a Checklist of Previous Illness or Exposure to Hazardous Chemicals

_____

What Medications Are You Presently Using _____

_____

Do You Have Any Physical or Medical Restrictions _____

_____

Are You Qualified to Wear Respirator (Provide Fit Test Results)_____

Name, Address, and Telephone Number of Personal Physician:

_____

_____

_____

14.0 MEDICAL DATA SHEET

This medical data sheet will be completed by all on-site personnel and will be kept on-site during the duration of the project. This data sheet will accompany any personnel when medical assistance is needed or if transport to hospital facilities is required.

PROJECT: Brownfield Cleanup Program to be conducted at the Old Champlain Mill Site Located at 16-50 Poultney Street in the Village of Whitehall, Washington County, New York.

Name _____ Home Telephone _____

Address _____

Emergency Contact _____

Drug or Other Allergies _____

Particular Sensitivities _____

Do You Wear Contact Lenses _____

Provide a Checklist of Previous Illness or Exposure to Hazardous Chemicals

_____

What Medications Are You Presently Using _____

_____

Do You Have Any Physical or Medical Restrictions _____

_____

Are You Qualified to Wear Respirator (Provide Fit Test Results)_____

Name, Address, and Telephone Number of Personal Physician:

_____

_____

_____

14.0 MEDICAL DATA SHEET

This medical data sheet will be completed by all on-site personnel and will be kept on-site during the duration of the project. This data sheet will accompany any personnel when medical assistance is needed or if transport to hospital facilities is required.

PROJECT: Brownfield Cleanup Program to be conducted at the Old Champlain Mill Site Located at 16-50 Poultney Street in the Village of Whitehall, Washington County, New York.

Name _____ Home Telephone _____

Address _____

Emergency Contact _____

Drug or Other Allergies _____

Particular Sensitivities _____

Do You Wear Contact Lenses _____

Provide a Checklist of Previous Illness or Exposure to Hazardous Chemicals

_____

What Medications Are You Presently Using _____

_____

Do You Have Any Physical or Medical Restrictions _____

_____

Are You Qualified to Wear Respirator (Provide Fit Test Results)_____

Name, Address, and Telephone Number of Personal Physician:

_____

_____

_____

14.0 MEDICAL DATA SHEET

This medical data sheet will be completed by all on-site personnel and will be kept on-site during the duration of the project. This data sheet will accompany any personnel when medical assistance is needed or if transport to hospital facilities is required.

PROJECT: Brownfield Cleanup Program to be conducted at the Old Champlain Mill Site Located at 16-50 Poultney Street in the Village of Whitehall, Washington County, New York.

Name _____ Home Telephone _____

Address _____

Emergency Contact _____

Drug or Other Allergies _____

Particular Sensitivities _____

Do You Wear Contact Lenses _____

Provide a Checklist of Previous Illness or Exposure to Hazardous Chemicals

_____

What Medications Are You Presently Using _____

_____

Do You Have Any Physical or Medical Restrictions _____

_____

Are You Qualified to Wear Respirator (Provide Fit Test Results)_____

Name, Address, and Telephone Number of Personal Physician:

_____

_____

_____

14.0 MEDICAL DATA SHEET

This medical data sheet will be completed by all on-site personnel and will be kept on-site during the duration of the project. This data sheet will accompany any personnel when medical assistance is needed or if transport to hospital facilities is required.

PROJECT: Brownfield Cleanup Program to be conducted at the Old Champlain Mill Site Located at 16-50 Poultney Street in the Village of Whitehall, Washington County, New York.

Name _____ Home Telephone _____

Address _____

Emergency Contact _____

Drug or Other Allergies _____

Particular Sensitivities _____

Do You Wear Contact Lenses _____

Provide a Checklist of Previous Illness or Exposure to Hazardous Chemicals

_____

What Medications Are You Presently Using _____

_____

Do You Have Any Physical or Medical Restrictions _____

_____

Are You Qualified to Wear Respirator (Provide Fit Test Results)_____

Name, Address, and Telephone Number of Personal Physician:

_____

_____

_____

14.0 MEDICAL DATA SHEET

This medical data sheet will be completed by all on-site personnel and will be kept on-site during the duration of the project. This data sheet will accompany any personnel when medical assistance is needed or if transport to hospital facilities is required.

PROJECT: Brownfield Cleanup Program to be conducted at the Old Champlain Mill Site Located at 16-50 Poultney Street in the Village of Whitehall, Washington County, New York.

Name _____ Home Telephone _____

Address _____

Emergency Contact _____

Drug or Other Allergies _____

Particular Sensitivities _____

Do You Wear Contact Lenses _____

Provide a Checklist of Previous Illness or Exposure to Hazardous Chemicals

_____

What Medications Are You Presently Using _____

_____

Do You Have Any Physical or Medical Restrictions _____

_____

Are You Qualified to Wear Respirator (Provide Fit Test Results)_____

Name, Address, and Telephone Number of Personal Physician:

_____

_____

_____

APPENDIX C

COMMUNITY AIR MONITORING PLAN

New York State Department of Health
Generic Community Air Monitoring Plan

A Community Air Monitoring Plan (CAMP) requires real-time monitoring for volatile organic compounds (VOCs) and particulates (i.e., dust) at the downwind perimeter of each designated work area when certain activities are in progress at contaminated sites. The CAMP is not intended for use in establishing action levels for worker respiratory protection. Rather, its intent is to provide a measure of protection for the downwind community (i.e., off-site receptors including residences and businesses and on-site workers not directly involved with the subject work activities) from potential airborne contaminant releases as a direct result of investigative and remedial work activities. The action levels specified herein require increased monitoring, corrective actions to abate emissions, and/or work shutdown. Additionally, the CAMP helps to confirm that work activities did not spread contamination off-site through the air.

The generic CAMP presented below will be sufficient to cover many, if not most, sites. Specific requirements should be reviewed for each situation in consultation with NYSDOH to ensure proper applicability. In some cases, a separate site-specific CAMP or supplement may be required. Depending upon the nature of contamination, chemical-specific monitoring with appropriately-sensitive methods may be required. Depending upon the proximity of potentially exposed individuals, more stringent monitoring or response levels than those presented below may be required. Special requirements will be necessary for work within 20 feet of potentially exposed individuals or structures and for indoor work with co-located residences or facilities. These requirements should be determined in consultation with NYSDOH.

Reliance on the CAMP should not preclude simple, common-sense measures to keep VOCs, dust, and odors at a minimum around the work areas.

Community Air Monitoring Plan

Depending upon the nature of known or potential contaminants at each site, real-time air monitoring for volatile organic compounds (VOCs) and/or particulate levels at the perimeter of the exclusion zone or work area will be necessary. Most sites will involve VOC and particulate monitoring; sites known to be contaminated with heavy metals alone may only require particulate monitoring. If radiological contamination is a concern, additional monitoring requirements may be necessary per consultation with appropriate NYSDEC/NYSDOH staff.

Continuous monitoring will be required for all <u>ground intrusive</u> activities and during the demolition of contaminated or potentially contaminated structures. Ground intrusive activities include, but are not limited to, soil/waste excavation and handling, test pitting or trenching, and the installation of soil borings or monitoring wells.

Periodic monitoring for VOCs will be required during non-intrusive activities such as the collection of soil and sediment samples or the collection of groundwater samples from existing monitoring wells. "Periodic" monitoring during sample collection might reasonably consist of taking a reading upon arrival at a sample location, monitoring while opening a well cap or overturning soil, monitoring during well baling/purging, and taking a reading prior to leaving a sample location. In some instances, depending upon the proximity of potentially exposed individuals, continuous monitoring may be required during sampling activities. Examples of such situations include groundwater sampling at wells on the curb of a busy urban street, in the midst of a public park, or adjacent to a school or residence.

VOC Monitoring, Response Levels, and Actions

Volatile organic compounds (VOCs) must be monitored at the downwind perimeter of the immediate work area (i.e., the exclusion zone) on a **continuous** basis or as otherwise specified. Upwind concentrations should be measured at the start of each workday and periodically thereafter to establish background conditions. The monitoring work should be performed using equipment appropriate to measure the types of contaminants known or suspected to be present. The equipment should be calibrated at least daily for the contaminant(s) of concern or for an appropriate surrogate. The equipment should be capable of calculating 15-minute running average concentrations, which will be compared to the levels specified below.

- If the ambient air concentration of total organic vapors at the downwind perimeter of the work area or exclusion zone exceeds 5 parts per million (ppm) above background for the 15-minute average, work activities must be temporarily halted and monitoring continued. If the total organic vapor level readily decreases (per instantaneous readings) below 5 ppm over background, work activities can resume with continued monitoring.

- If total organic vapor levels at the downwind perimeter of the work area or exclusion zone persist at levels in excess of 5 ppm over background but less than 25 ppm, work activities must be halted, the source of vapors identified, corrective actions taken to abate emissions, and monitoring continued. After these steps, work activities can resume provided that the total organic vapor level 200 feet downwind of the exclusion zone or half the distance to the nearest potential receptor or residential/commercial structure, whichever is less - but in no case less than 20 feet, is below 5 ppm over background for the 15-minute average.

- If the organic vapor level is above 25 ppm at the perimeter of the work area, activities must be shutdown.

All 15-minute readings must be recorded and be available for State (DEC and DOH) personnel to review. Instantaneous readings, if any, used for decision purposes should also be recorded.

Particulate Monitoring, Response Levels, and Actions

Particulate concentrations should be monitored **continuously** at the upwind and downwind perimeters of the exclusion zone at temporary particulate monitoring stations. The particulate monitoring should be performed using real-time monitoring equipment capable of measuring particulate matter less than 10 micrometers in size (PM-10) and capable of integrating over a period of 15 minutes (or less) for comparison to the airborne particulate action level. The equipment must be equipped with an audible alarm to indicate exceedance of the action level. In addition, fugitive dust migration should be visually assessed during all work activities.

- If the downwind PM-10 particulate level is 100 micrograms per cubic meter (mcg/m^3) greater than background (upwind perimeter) for the 15-minute period or if airborne dust is observed leaving the work area, then dust suppression techniques must be employed. Work may continue with dust suppression techniques provided that downwind PM-10 particulate levels do not exceed 150 mcg/m^3 above the upwind level and provided that no visible dust is migrating from the work area.

- If, after implementation of dust suppression techniques, downwind PM-10 particulate levels are greater than 150 mcg/m^3 above the upwind level, work must be stopped and a re-evaluation of activities initiated. Work can resume provided that dust suppression measures and other controls are successful in reducing the downwind PM-10 particulate concentration to within 150 mcg/m^3 of the upwind level and in preventing visible dust migration.

All readings must be recorded and be available for State (DEC and DOH) personnel to review.

June 20, 2000

H:\Southern\gCAMPr1.doc

New York State Department of Environmental Conservation

Brownfield Cleanup Program

Citizen Participation Plan
For
Old Champlain Mill Site

15-60 Poultney Street
Village of Whitehall
Washington County, New York

November 2007
(Revised October 2008)

Contents

Section		Page Number
1.	What is New York's Brownfield Cleanup Program?	3
2.	Citizen Participation Plan Overview	3
3.	Site Information	5
4.	Remedial Process	6
5.	Citizen Participation Activities	9
6.	Major Issues of Public Concern	9
Appendix A – Site Location Map		10
Appendix B – Project Contacts and Document Repositories		11
Appendix C – Brownfield Site Contact List		12
Appendix D – Identification of Citizen Participation Activities		13
Appendix E – Brownfield Cleanup Program Process		14

* * * * *

Note: The information presented in this Citizen Participation Plan was current as of the date of its approval by the New York State Department of Environmental Conservation. Portions of this Citizen Participation Plan may be revised during the brownfield site's remedial process.

Applicant: Mr. Rod Donnelly of Poultney Street Partners, LLC ("Applicant")
Site Name: Old Champlain Mill Site("site")
Site Address: 15-60 Poultney Street, Whitehall New York
Site County: Washington County
Site Number: C558036

1. What is New York's Brownfield Cleanup Program?

New York's Brownfield Cleanup Program (BCP) is designed to encourage the private sector to investigate, remediate (clean up) and redevelop brownfields. A brownfield is any real property where redevelopment or reuse may be complicated by the presence or potential presence of a contaminant. A brownfield typically is a former industrial or commercial property where operations may have resulted in environmental contamination. A brownfield can pose environmental, legal and financial burdens on a community. If the brownfield is not addressed, it can reduce property values in the area and affect economic development of nearby properties.

The BCP is administered by the New York State Department of Environmental Conservation (NYSDEC) which oversees Applicants that conduct brownfield site remedial activities.[1] An Applicant is a person whose request to participate in the BCP has been accepted by NYSDEC. The BCP contains investigation and remediation (cleanup) requirements, ensuring that cleanups protect public health and the environment. When NYSDEC certifies that these requirements have been met, the property can be reused or redeveloped for the intended use.

For more information about the BCP, go online at: **www.dec.ny.gov/chemical/8450.html**

2. Citizen Participation Plan Overview

This Citizen Participation (CP) Plan provides members of the affected and interested public with information about how NYSDEC will inform and involve them during the investigation and remediation of the site identified above. The public information and involvement program will be carried out with assistance, as appropriate, from the Applicant.

Appendix A contains a map identifying the location of the site.

Project Contacts

Appendix B identifies NYSDEC project contact(s) to whom the public should address questions or request information about the site's remedial program. The public's suggestions about this CP

[1] "Remedial activities", "remedial action" and "remediation" are defined as all activities or actions undertaken to eliminate, remove, treat, abate, control, manage, or monitor contaminants at or coming from a brownfield site.

Plan and the CP program for the site are always welcome. Interested people are encouraged to share their ideas and suggestions with the project contacts at any time.

Document Repositories

The locations of the site's document repositories also are identified in Appendix B. The document repositories provide convenient access to important project documents for public review and comment.

Site Contact List

Appendix C contains the brownfield site contact list. This list has been developed to keep the community informed about, and involved in, the site's investigation and remediation process. The brownfield site contact list will be used periodically to distribute fact sheets that provide updates about the status of the project, including notifications of upcoming remedial activities at the site (such as fieldwork), as well as availability of project documents and announcements about public comment periods.

The brownfield site contact list includes, at a minimum:

- chief executive officer and zoning chairperson of each county, city, town and village in which the site is located;
- residents, owners, and occupants of the site and properties adjacent to the site;
- the public water supplier which services the area in which the site is located;
- any person who has requested to be placed on the site contact list;
- the administrator of any school or day care facility located on or near the site for purposes of posting and/or dissemination of information at the facility;
- document repositories.

Where the site or adjacent real property contains multiple dwelling units, the Applicant will work with NYSDEC to develop an alternative method for providing such notice in lieu of mailing to each individual. For example, the owner of such a property that contains multiple dwellings may be requested to prominently display fact sheets and notices required to be developed during the site's remedial process. This procedure would substitute for the mailing of such notices and fact sheets, especially at locations where renters, tenants and other residents may number in the hundreds or thousands, making the mailing of such notices impractical.

The brownfield site contact list will be reviewed periodically and updated as appropriate. Individuals and organizations will be added to the site contact list upon request. Such requests should be submitted to the NYSDEC project contact(s) identified in Appendix B. Other additions to the brownfield site contact list may be made on a site-specific basis at the discretion of the NYSDEC project manager, in consultation with other NYSDEC staff as appropriate.

CP Activities

Appendix D identifies the CP activities, at a minimum, that have been and will be conducted during the site's remedial program. The flowchart in Appendix E shows how these CP activities integrate with the site remedial process. The public is informed about these CP activities through fact sheets and notices developed at significant points in the site's remedial process.

- **Notices and fact sheets** help the interested and affected public to understand contamination issues related to a brownfield site, and the nature and progress of efforts to investigate and remediate a brownfield site.

- **Public forums, comment periods and contact with project managers** provide opportunities for the public to contribute information, opinions and perspectives that have the potential to influence decisions about a brownfield site's investigation and remediation.

The public is encouraged to contact project staff anytime during the site's remedial process with questions, comments, or requests for information about the remedial program.

This CP Plan may be revised due to changes in major issues of public concern identified in Section 6 or in the nature and scope of remedial activities. Modifications may include additions to the site contact list and changes in planned citizen participation activities.

3. Site Information

The subject site is located at 16-50 Poultney Street (US Route 4) in the Village of Whitehall, Washington County, New York. The site is located on the south side of Poultney Street and is bound to the east by Wood Creek and to the west by the Champlain Canal. The site was identified on the Village of Whitehall tax maps as being within the parcel with section 60.6, block 1 and lot 5.

Site Description

The subject site incorporates approximately 11.49 acres of fairly level land, though the adjoining Poultney Street roadway to the north of the site sits at an elevation higher than that of the subject site. With the exception of a brick smoke stack, no buildings are currently located on the site.

Formerly, the site was occupied by a 120,000 square foot manufacturing facility and an approximate 5,000 square foot power house. The manufacturing building was a one story brick structure which was reportedly constructed in 1916 and demolished in 2003. The building was constructed on a slab foundation. Much of the foundation of the former manufacturing building remains on the site. The power house was a one story brick building located to the south of the factory building. The power house was also reportedly constructed in 1916 and formerly housed the boiler for the manufacturing building. Much of the concrete slab foundation for the power house also remains on the site. A fenced in sewage pump station, conveyed in an easement to the Town of Whitehall, occupies the southeastern portion of the site.

A paved driveway enters the site from Poultney Street on the eastern portion of the site. The driveway leads to a paved parking area located north of the location of the former manufacturing building. A gravel driveway traverses the eastern portion of the site providing access to the sewage pump station. The gravel driveway is a permanent easement and right-of-way that was conveyed to the Town of Whitehall. Seven wetland areas have been delineated on the site.

Site History

The site was reportedly first developed as a silk mill. The site was used for this purpose until 1959 at which point the building was used to manufacture newspaper vending machines. The site was used for this purpose until 2001. The buildings formerly located on the site are indicated to have been demolished in 2003. These buildings reportedly had not been used since 2001.

Petroleum fuels, solvents, PCBs, dyes, paints and heavy metals may have been used in association with past manufacturing uses of the site. Public sanitary sewer was reportedly not made available to the site until 1976.

Environmental History

C.T. Male has conducted four (4) environmental investigations of the site and has reviewed site related documentation contained in portions of environmental investigations conducted by others on the site's south adjoining Poultney Street Inactive Hazardous Waste Site.

Results of the on-site investigations shows chlorinated volatile organic compounds in groundwater and polyaromatic hydrocarbons (PAHs) in soils at concentrations exceeding regulatory guidelines. The highest concentrations of chlorinated volatile organic compounds were in the vicinity of, and to the north of, the central portion of the former building slab. The elevated PAHs were detected in surface soils sampled in the vicinity of the former boiler house.

Based on the previous investigations, it was determined that the site contaminants originate from on-site sources and not from the site's south adjoining Poultney Street Inactive Hazardous Waste Site, which is located hydraulically upgradient of the site. Additional detail regarding the site's environmental history is presented in the Remedial Investigation (RI) Work Plan, which is available for public review in the document repositories.

4. Remedial Process

Note: See Appendix E for a flowchart of the brownfield site remedial process.

Application

The Applicant has applied for and been accepted into New York's Brownfield Cleanup Program as a volunteer. This means that the Applicant was not responsible for the disposal or discharge of the contaminants or whose ownership or operation of the site took place after the discharge or disposal of contaminants. The Volunteer must fully characterize the nature and extent of

contamination onsite, and must conduct a "qualitative exposure assessment," a process that characterizes the actual or potential exposures of people, fish and wildlife to contaminants on the site and to contamination that has migrated from the site.

The Applicant in its Application proposes that the site will be used for restricted purposes.

To achieve this goal, the Applicant will conduct remedial activities at the site with oversight provided by NYSDEC. The Brownfield Cleanup Agreement executed by NYSDEC and the Applicant sets forth the responsibilities of each party in conducting a remedial program at the site.

Investigation

The Applicant will conduct remedial investigation (RI) of the site per the approved work plan, and the RI performed with NYSDEC oversight. The Applicant must develop a remedial investigation work plan, which is subject to public comment as noted in Appendix D. The goals of the investigation are as follows:

1) Define the nature and extent of contamination in soil, sediment, surface water, groundwater and any other impacted media;

2) Identify the source(s) of the contamination;

3) Assess the impact of the contamination on public health and/or the environment; and

4) Provide information to support the development of a Remedial Work Plan to address the contamination, or to support a conclusion that the contamination does not need to be addressed.

The Applicant will prepare an RI Report after it completes the RI. This report will summarize the results of the RI and will include the Applicant's recommendation of whether remediation is needed to address site-related contamination. The RI Report is subject to review and approval by NYSDEC. Before the RI Report is approved, a fact sheet that describes the RI Report will be sent to the site's contact list.

NYSDEC will determine if the site poses a significant threat to public health and/or the environment. If NYSDEC determines that the site is a "significant threat," a qualifying community group may apply for a Technical Assistance Grant (TAG). The purpose of a TAG is to provide funds to the qualifying community group to obtain independent technical assistance. This assistance helps the TAG recipient to interpret and understand existing environmental information about the nature and extent of contamination related to the site and the development/implementation of a remedy.

An eligible community group must certify that its membership represents the interest of the community affected by the site, and that its members' health, economic well-being or enjoyment of the environment are potentially threatened by the site.

For more information about the TAG Program and the availability of TAGs, go online at: **www.dec.state.ny.us/website/der**

Remedy Selection

After NYSDEC approves the RI Report, the Applicant will be able to develop a Remedial Work Plan if remediation is required. The Remedial Work Plan describes how the Applicant would address the contamination related to the site.

The public will have the opportunity to review and comment on the draft Remedial Work Plan. The site contact list will be sent a fact sheet that describes the draft Remedial Work Plan and announces a 45-day public comment period. NYSDEC will factor this input into its decision to approve, reject or modify the draft Remedial Work Plan.

A public meeting may be held by NYSDEC about the proposed Remedial Work Plan if requested by the affected community and if significant substantive issues are raised about the draft Remedial Work Plan. Please note that, in order to request a public meeting, the health, economic well-being or enjoyment of the environment of those requesting the public meeting must be threatened or potentially threatened by the site. In addition, the request for the public meeting should be made within the first 30 days of the 45-day public comment period for the draft Remedial Work Plan. A public meeting also may be held at the discretion of the NYSDEC project manager in consultation with other NYSDEC staff as appropriate.

Construction

Approval of the Remedial Work Plan by NYSDEC will allow the Applicant to design and construct the alternative selected to remediate the site. The site contact list will receive notification before the start of site remediation. When the Applicant completes remedial activities, it will prepare a final engineering report that certifies that remediation requirements have been achieved or will be achieved within a specific time frame. NYSDEC will review the report to be certain that the remediation is protective of public health and the environment for the intended use of the site. The site contact list will receive a fact sheet that announces the completion of remedial activities and the review of the final engineering report.

Certificate of Completion and Site Management

Once NYSDEC approves the final engineering report, NYSDEC will issue the Applicant a Certificate of Completion. This Certificate states that remediation goals have been achieved, and relieves the Applicant from future remedial liability, subject to statutory conditions. The Certificate also includes a description of any institutional and engineering controls or monitoring required by the approved remedial work plan. If the Applicant uses institutional controls or engineering controls to achieve remedial objectives, the site contact list will receive a fact sheet that discusses such controls.

An institutional control is a non-physical restriction on use of the brownfield site, such as a deed restriction that would prevent or restrict certain uses of the remediated property. An institutional

control may be used when the remedial action leaves some contamination that makes the site suitable for some, but not all uses.

An engineering control is a physical barrier or method to manage contamination, such as a cap or vapor barrier.

Site management will be conducted by the Applicant as required. NYSDEC will provide appropriate oversight. Site management involves the institutional and engineering controls required for the brownfield site. Examples include: operation of a water treatment plant, maintenance of a cap or cover, and monitoring of groundwater quality.

5. Citizen Participation Activities

CP activities that have already occurred and are planned during the investigation and remediation of the site under the BCP are identified in Appendix D: Identification of Citizen Participation Activities. These activities also are identified in the flowchart of the BCP process in Appendix E. NYSDEC will ensure that these CP activities are conducted, with appropriate assistance from the Applicant.

All CP activities are conducted to provide the public with significant information about site findings and planned remedial activities, and some activities announce comment periods and request public input about important draft documents such as the Proposed Remedial Work Plan.

All written materials developed for the public will be reviewed and approved by NYSDEC for clarity and accuracy before they are distributed. Notices and fact sheets can be combined at the discretion, and with the approval of, NYSDEC.

6. Major Issues of Public Concern

This section of the CP Plan identifies major issues of public concern, if any, that relate to the site. Additional major issues of public concern may be identified during the site's remedial process.

Based on the information gathered to date for the site, there does not seem to be any major issues of public concern. Past investigations of the site have identified the following parameters in different media at concentrations exceeding regulatory guidelines.

- Chlorinated volatile organic compounds in groundwater.
- PAHs in surface soils.

Appendix A – Site Location Map

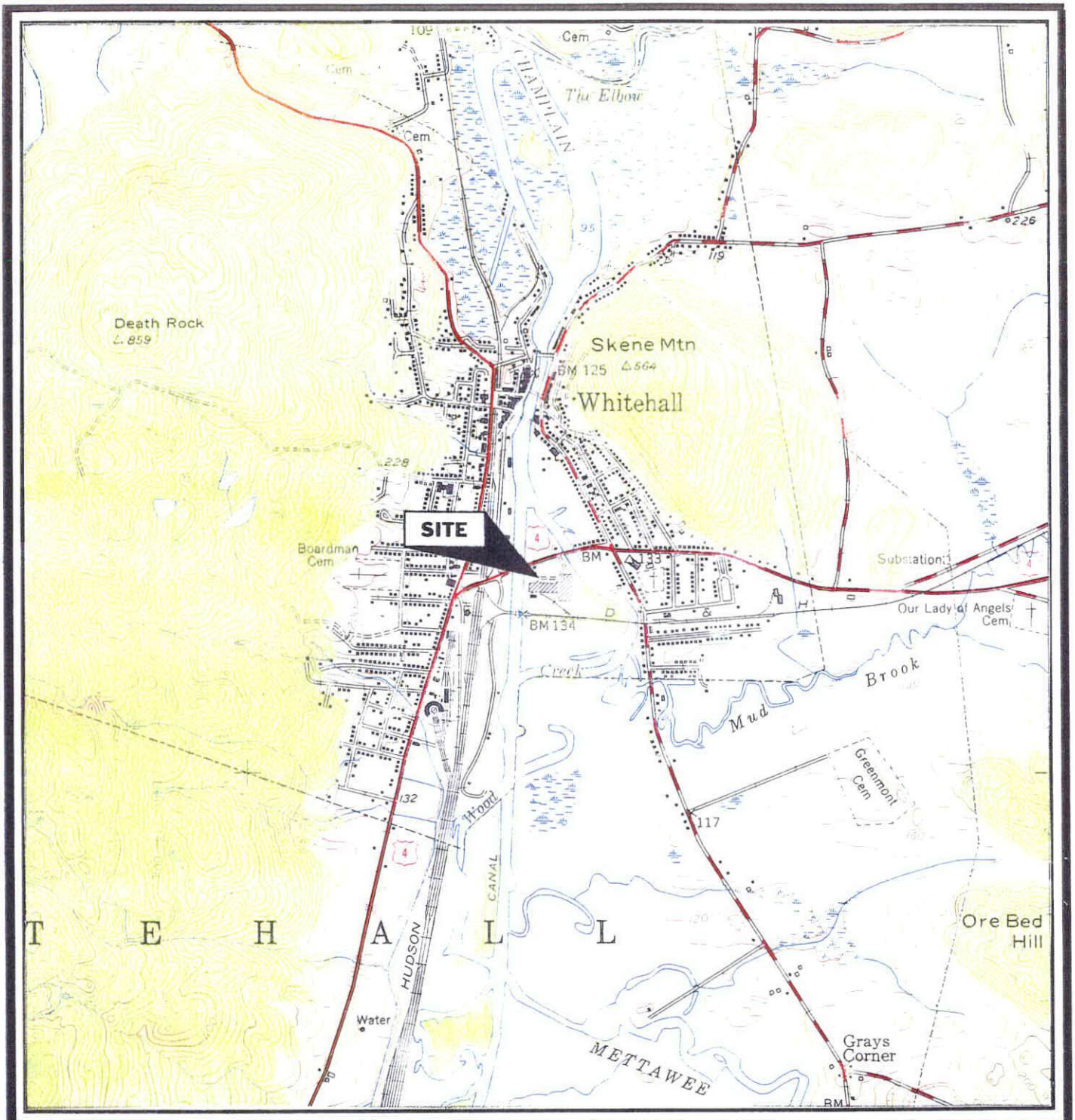

MAP REFERENCE
United States Geological Survey
7.5 Minute Series Topographic Map
Quadrangle: Whitehall, NY
Date: 1950

ENGINEERING
ENVIRONMENTAL SERVICES
SURVEYING
PHONE (518)786-7400
FAX (518) 786-7299

C.T.MALE ASSOCIATES, P.C.
50 CENTURY HILL DRIVE, PO BOX 727, LATHAM, NY 12110

FIGURE 1 SITE LOCATION MAP

OLD CHAMPLAIN MILL

VILLAGE OF WHITEHALL	WASHINGTON COUNTY, NY
SCALE: 1:24,000	
DRAFTER: ASG	
PROJECT No.	

Appendix B – Project Contacts and Document Repositories

Project Contacts

For information about the site's remedial program, the public may contact any of the following project staff:

New York State Department of Environmental Conservation (NYSDEC):

Ms. Alicia Thorne
Project Manager
NYSDEC Region 5
Division of Environmental Remediation
Route 86, P.O. Box 296
Ray Brook, New York 12977-0296
(518) 623-1238

Citizen Participation Specialist
David Winchell
NYSDEC Region 5
1115 NYS Route 86, P.O. Box 296
Ray Brook, New York 12977-0296
(518) 897-1211

New York State Department of Health (NYSDOH):

Ms. Wendy Kuehner, P.E.
Bureau of Environmental Exposure
Investigation
New York State Department of Health
Flanigan Square, Room 300
547 River Street
Troy, New York 12180-2216

Document Repositories

The document repositories identified below have been established to provide the public with convenient access to important project documents:

The Whitehall Free Library
12 William Street
Whitehall, New York 12887
Attn: Reference Librarian
Phone: (518) 499-1366
Hours:

-Monday:	2:30pm-8:30pm
-Tuesday:	3:00pm-7:00pm
-Wednesday:	5:00pm-8:30pm
-Thursday:	2:00pm-6:00pm
-Friday:	5:00pm-8:30pm
-Saturday:	10:00am-2:00pm
-Sunday:	Closed

NYSDEC Region 5
Route 86, P.O. Box 296
Ray Brook, New York 12977-0296
Attn: Alicia Thorne
Hours: Mon. – Fri. 8:30 am to 4:30 pm
(518) 897-1200
(call for appointment)

Village of Whitehall Clerk's Office
1 Saunders Street
Whitehall, New York 12887
Hours: (call for appointment)
Phone: (518) 499-0871

Appendix C – Brownfield Site Contact List

The following entities are included on the Brownfield Site Contact List (BSCL).

Site Owner

Mr. Rod Donnelly, Poultney Street Partners, LLC, 26 North Center Street, Orange, New Jersey 07050

Local Public Water Supplier

Village of Whitehall Water Department, c/o Patricia Norton (Mayor), P.O. Box 207, 1 Saunders Street, Whitehall, New York 12887, (518) 499-0871

School and/or Day Care Facility Administrator

According to review of both surrounding tax map parcels and consultation with the Village of Whitehall Clerk, schools and day care facilities are not located near the site.

Local Government Officials

1. Honorable Patricia Norton, Village of Whitehall Mayor, P.O. Box 207, 1 Saunders Street, Whitehall, New York 12887, (518) 499-0871

2. Marvin Brooks, Village of Whitehall Planning Board Chairperson, 41 Neddo Street, Whitehall, New York 12887, (518) 499-0517

3. Mark Galough, Washington County Planning Board Director, 383 Broadway, Fort Edward, New York 12828, (518) 746-2293

4. JoAnne Trinkle, CEO Washington County Board of Supervisors, 383 Broadway, Fort Edward, New York 12828, (518) 746-2210

Adjacent Property Owners

The list of adjacent property owners is kept confidential in the NYSDEC project manager's files. If you would like to be included in the list, please contact the NYSDEC project manager, Ms. Alicia Thorne directly at (518) 623-1238. Thank you.

Appendix D – Identification of Citizen Participation Activities

Required Citizen Participation (CP) Activities	CP Activities Occur at this Point
Application Process:	
• Prepare brownfield site contact list (BSCL) • Establish document repositories	At time of preparation of application to participate in BCP.
• Publish notice in Environmental Notice Bulletin (ENB) announcing receipt of application and 30-day comment period	When NYSDEC determines that BCP application is complete. The 30-day comment period begins on date of publication of notice in ENB. End date of comment period is as stated in ENB notice. Therefore, ENB notice, newspaper notice and notice to the BSCL should be provided to the public at the same time.
After Execution of Brownfield Site Cleanup Agreement:	
• Prepare citizen participation (CP) plan	Draft CP Plan must be submitted within 20 days of entering Brownfield Site Cleanup Agreement. CP Plan must be approved by NYSDEC before distribution.
After Remedial Investigation (RI) Work Plan Received:	
• Mail fact sheet to BSCL about proposed RI activities and announcing 30-day public comment period on draft RI Work Plan	Before NYSDEC approves RI Work Plan. If RI Work Plan is submitted with application, comment periods will be combined and public notice will include fact sheet. 30-day comment period begins/ends as per dates identified in fact sheet.
After RI Completion:	
• Mail fact sheet to BSCL describing results of RI	Before NYSDEC approves RI Report.
After Remedial Work Plan (RWP) Received:	
• Mail fact sheet to BSCL about proposed RWP and announcing 45-day comment period • Public meeting by NYSDEC about proposed RWP (if requested by affected community or at discretion of NYSDEC project manager in consultation with other NYSDEC staff as appropriate)	Before NYSDEC approves RWP. 45-day comment period begins/ends as per dates identified in fact sheet. Public meeting would be held within the 45-day comment period.
After Approval of RWP:	
• Mail fact sheet to BSCL summarizing upcoming remedial construction	Before the start of remedial construction.
After Remedial Action Completed:	
• Mail fact sheet to BSCL announcing that remedial construction has been completed • Mail fact sheet to BSCL announcing issuance of Certificate of Completion (COC)	At the time NYSDEC approves Final Engineering Report. These two fact sheets should be combined when possible if there is not a delay in issuance of the COC.

Appendix E – Brownfield Cleanup Program Process

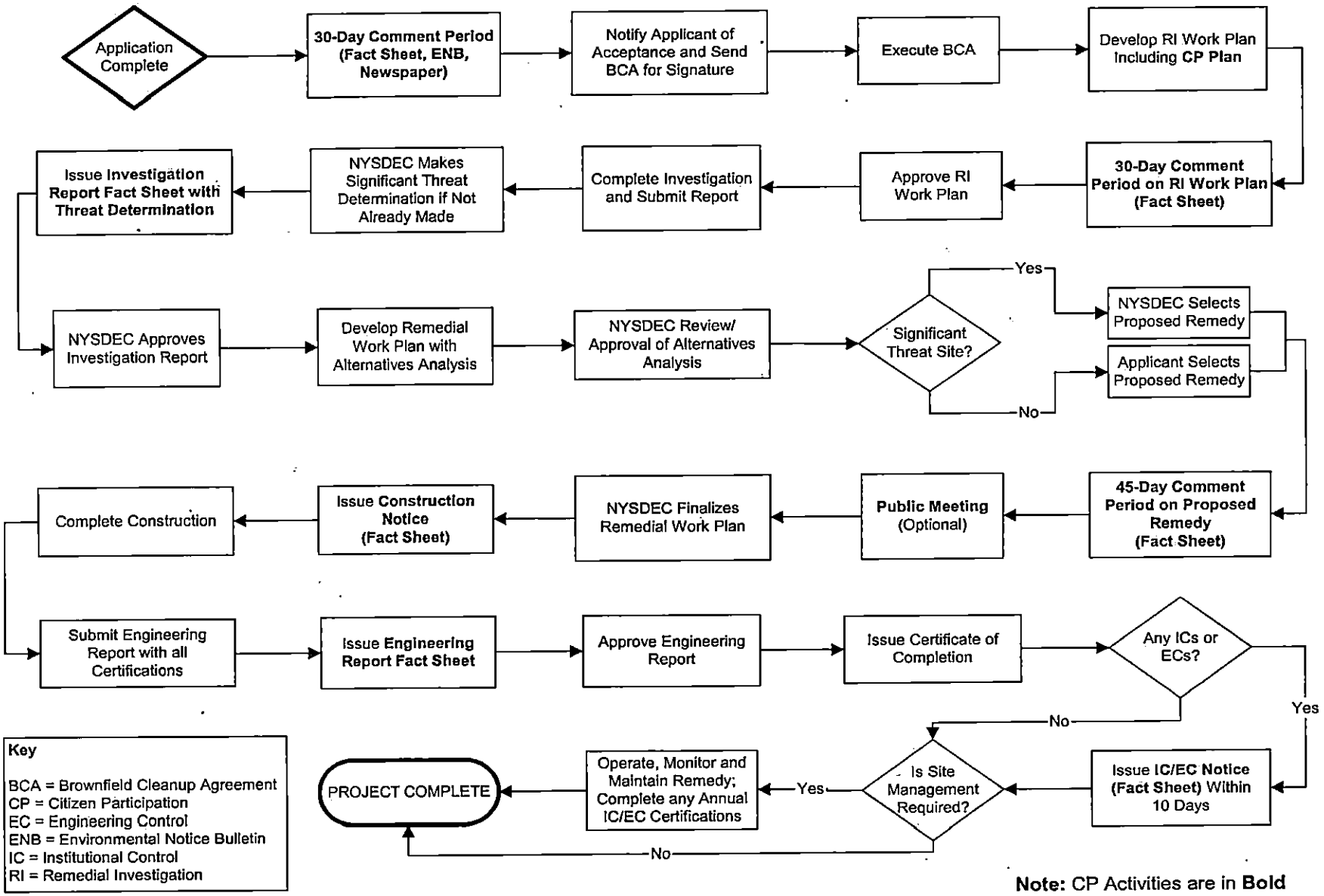

Note: CP Activities are in **Bold**

EXHIBIT 1

MAP OF SURVEY PREPARED FOR OLD CHAMPPLAIN MILL, INC.

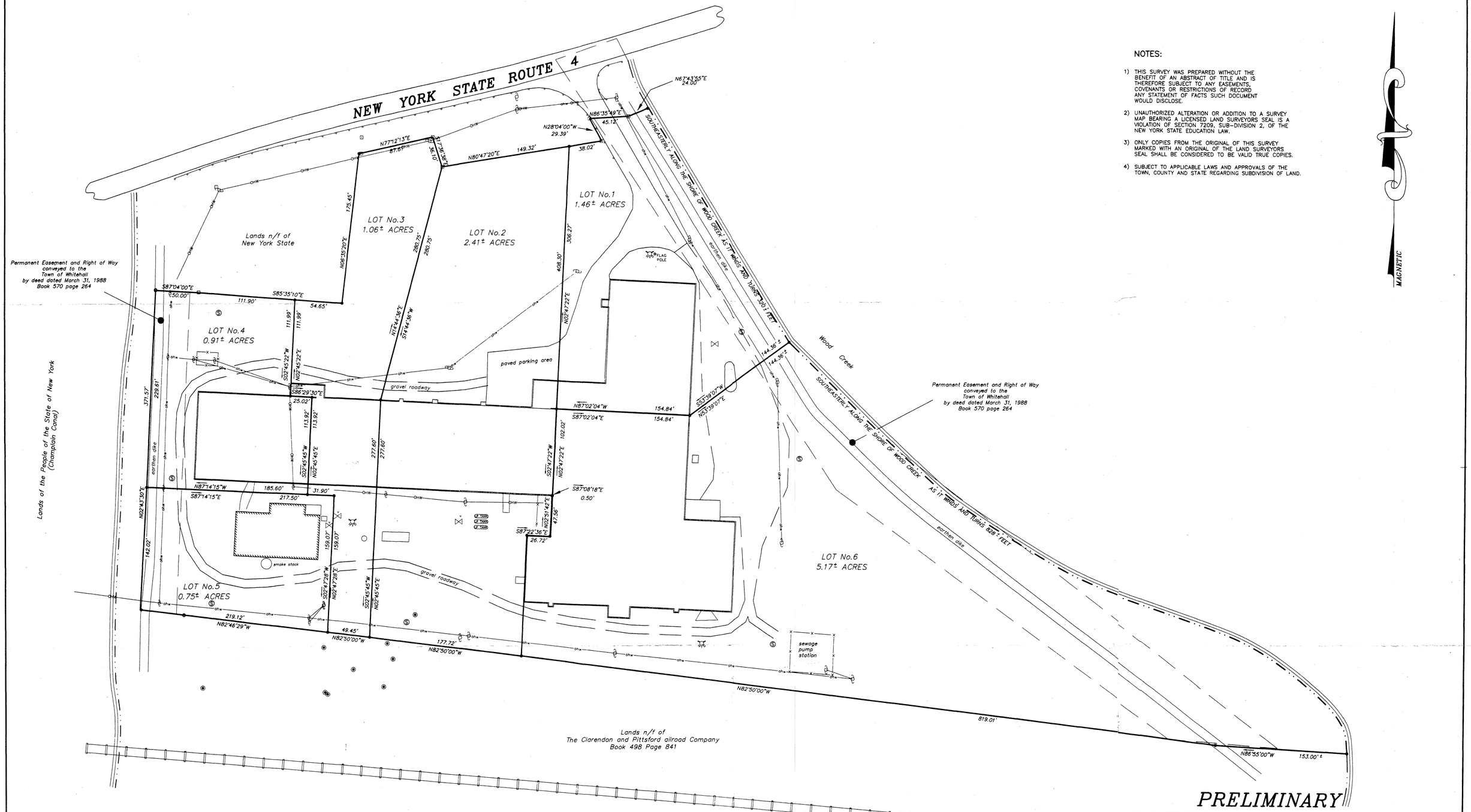

NOTES:

1) THIS SURVEY WAS PREPARED WITHOUT THE BENEFIT OF AN ABSTRACT OF TITLE AND IS THEREFORE SUBJECT TO ANY EASEMENTS, COVENANTS OR RESTRICTIONS OF RECORD ANY STATEMENT OF FACTS SUCH DOCUMENT WOULD DISCLOSE.

2) UNAUTHORIZED ALTERATION OR ADDITION TO A SURVEY MAP BEARING A LICENSED LAND SURVEYORS SEAL IS A VIOLATION OF SECTION 7209, SUB-DIVISION 2, OF THE NEW YORK STATE EDUCATION LAW.

3) ONLY COPIES FROM THE ORIGINAL OF THIS SURVEY MARKED WITH AN ORIGINAL OF THE LAND SURVEYORS SEAL SHALL BE CONSIDERED TO BE VALID TRUE COPIES.

4) SUBJECT TO APPLICABLE LAWS AND APPROVALS OF THE TOWN, COUNTY AND STATE REGARDING SUBDIVISION OF LAND.

LEGEND

o I.R.F.	IRON ROD FOUND
o I.P.F.	IRON PIPE FOUND
o I.R.S.	IRON ROD SET
	UTILITY POLE
	STONE WALL
	BARBED WIRE FENCE
	POINT
W.F.P.	WOOD FENCE POST
	OVERHEAD WIRES
n/f	NOW OR FORMERLY
	MONITORING WELLS

DEED REFERENCE:

PHYLIS COOPER
AS THE TREASURER OF WASHINGTON COUNTY
TO
OLD CHAMPLAIN MILL INC.
DATED JULY 23, 2001
BOOK 885 PAGE 98

PRELIMINARY

REVISIONS

NO.	DATE	DESCRIPTION	BY

MAP OF A 6 LOT SUBDIVISION MADE FOR

OLD CHAMPLAIN MILL INC.

VILLAGE OF WHITEHALL, COUNTY OF WASHINGTON, STATE OF NEW YORK

DAVID J. BOLSTER
LICENSED LAND SURVEYOR
342 MAIN STREET, HUDSON FALLS, NEW YORK 12839

DAVID J. BOLSTER, LLS	DATE: MAY 13, 2002	SCALE: 1" = 50'	N.Y.S. LIC. NO. 49534
DATE SEALED			DWG. NO. 02-056 V/O WHITEHALL 60.6-1-5

EXHIBIT 2

2006 C.T. MALE PHASE I ESA

PRIVILEGED AND CONFIDENTIAL
PREPARED AT THE REQUEST OF COUNSEL

August 8, 2006

DRAFT Phase I Environmental Site Assessment Old Champlain Mill Site 16-50 Poultney Street Village of Whitehall Washington County, New York

Prepared for:

DONNELLY INDUSTRIES, INC.
26 N. Center Street
Orange, New Jersey 07050

Prepared by:

C.T. MALE ASSOCIATES, P.C.
50 Century Hill Drive
P.O. Box 727
Latham, New York 12110
(518) 786-7400
FAX (518) 786-7299

C.T. Male Project No: 06.6448

Unauthorized alteration or addition to this document is a violation of Section 7209 Subdivision 2 of the New York State Education Law.

© Copyright 2006
C.T. MALE ASSOCIATES, P.C.

PHASE I
ENVIRONMENTAL SITE ASSESSMENT REPORT
OLD CHAMPLAIN MILL SITE

TABLE OF CONTENTS

Page

1.0 INTRODUCTION 1

2.0 SITE DESCRIPTION 2

2.1 Site Location 2
2.2 Property/Business Owner 2
2.3 Current Site Uses 2
2.4 Former/Historic Site Uses 2
2.5 Total Site Area and Topographic Description 2
2.6 Site Geology 3
2.7 Nearby Surface Water Bodies and Water Supply Wells 3
2.8 Site Buildings and Structures 3
2.9 Roadways or Driveways on or Adjoining the Site 4
2.10 Rights-of-Way and/or Easements (On-Site and Adjacent) 4
2.11 Surrounding Land Uses 4

3.0 SITE AND SURROUNDING AREA HISTORIC AND RECORDS REVIEW 5

3.1 Ownership Information 5
3.2 Sanborn Fire Insurance Maps 5
3.3 Aerial Photographs 5
3.4 Information From the Local Historian 6
3.5 Information From Health Department Official(s) 6
3.6 Information From Other Local Official(s) 6
3.7 Information From Current or Former Property Owner(s) 7
3.8 Summary of Previous Environmental Assessments 9
3.9 ASTM Federal and State Database Review 9

PHASE I
ENVIRONMENTAL SITE ASSESSMENT REPORT
OLD CHAMPLAIN MILL SITE

TABLE OF CONTENTS

Page

4.0 SITE VISIT 16

4.1 Conditions of the Visit 16
4.2 Uses of Site Buildings and Structures 17
4.3 Site Utilities 17
4.4 Transformers/Capacitors (Liquid Filled Only) 17
4.5 Asbestos Containing Materials (ACM) 18
4.6 Site Surface Water Bodies/Areas 18
4.7 Site Drainage 18
4.8 Site Waste Profile 19
4.9 Underground (UG) and/or Above Ground (AG) Storage Tanks 21
4.10 Observed Evidence of Potential or Known Site Contamination 22

5.0 FINDINGS, OPINION AND CONCLUSIONS 23

5.1 Findings 23
5.2 Opinion 24
5.3 Conclusions 26

APPENDICES

APPENDIX A: Figures/Maps

APPENDIX B: Site Visit Photographs

APPENDIX C: References and Records of Communication

APPENDIX D: Environmental Database Report

APPENDIX E: Sampling Results and Information Pertaining to the Poultney Street Hazardous Waste Facility

APPENDIX F: Previous Environmental Site Assessment Report

1.0 INTRODUCTION

This report presents the findings of a Phase I Environmental Site Assessment conducted at the Old Champlain Mill Site which is located in the Village of Whitehall, Washington County, New York.

The purpose of this site assessment was to reasonably identify recognized environmental conditions. A recognized environmental condition is defined as the presence or likely presence of hazardous substances or petroleum products on a property under conditions that indicate an existing release, a past release, or a material threat of a release. The finding of no recognized environmental conditions is not a warranty or guarantee that the site remains free from contamination. This environmental site assessment is designed to reduce, but not eliminate, uncertainty within reasonable limits of time and cost.

The site assessment included a site visit/observation, a review of existing documents and environmental lists, and background research on the previous uses and practices at the subject site as reported and documented by site contacts and Local, State and County officials known to be responsible for regulating and enforcing site area environmental conditions. This site assessment has been performed in general conformance with the scope and limitations as outlined in ASTM E 1527-00, Standard Practice for Environmental Site Assessments: Phase I Environmental Site Assessment Process.

This site assessment did not include a review of non-scope issues as identified by ASTM E 1527 with the exception of asbestos containing materials.

This site assessment was conducted by C.T. Male Associates, P.C. (C.T. Male) as requested by Mr. Rod Donnelly of Donnelly Industries, Inc. in Orange, New Jersey. Mr. Peter Ward, the current property owner, was the site contact for this assessment.

2.0 SITE DESCRIPTION

2.1 Site Location

The subject site is located at 16-50 Poultney Street (US Route 4) in the Village of Whitehall, Washington County, New York. The site is located on the south side of Poultney Street and is bound to the east by Wood Creek and to the west by the Champlain Canal. The site was identified on the Village of Whitehall tax maps as being within the parcel with section 60.6, block 1 and lot 5. A site location map is included in Appendix A as Figure 1. A map showing the site property boundaries is included in Appendix A as Figure 2.

2.2 Property/Business Owner

According to assessment records, the current property owner is Champlain, LLC of Webster, Massachusetts.

2.3 Current Site Uses

The site is currently unoccupied. The buildings formerly located on the site are indicated to have been demolished in 2003. These buildings reportedly had not been used since 2001.

2.4 Former/Historic Site Uses

The site was reportedly developed in 1916 as a silk mill. The site was used for this purpose until 1959 at which point the building was used to manufacture newspaper vending machines. The site was used for this purpose until 2001.

2.5 Total Site Area and Topographic Description

The subject site incorporates approximately 11.49 acres of fairly level land, though the adjoining Poultney Street roadway to the north of the site sits at an elevation higher than that of the subject site. According to the United States Geological Survey (USGS) Topographic Map, the subject site lies at approximately 130 feet above Mean Sea Level.

2.6 Site Geology

Soils are mapped by the Washington Soil Survey as Limerick silt loam with a small area of Saco silt loam. The Limerick series consists of deep, poorly drained medium-textured soils formed in alluvial deposits of silt and very fine sand. They are nearly level and are found in low areas on flood plains. The Saco series consists of deep, very poorly drained medium textured soils formed in silty alluvial sediments. They are nearly level and are in low areas on flood plains that are subject to frequent flooding. Surficial geology is mapped as lacustrine silt and clay. These soils consist of laminated silts and clays which are generally calcareous, with low permeability and potential land instability. They range in thickness up to 50 meters.

The water table at the subject site is reported to be within 1-2 feet of the ground surface.

2.7 Nearby Surface Water Bodies and Water Supply Wells

The surrounding area is reportedly supplied with municipal water from the Village of Whitehall.

The Champlain Canal borders the site to the west and Wood Creek borders the site to the east.

2.8 Site Buildings and Structures

With the exception of a brick smoke stack, no buildings are currently located on the site. Formerly, the site was occupied by a 120,000 square foot manufacturing facility and an approximate 5,000 square foot power house. The manufacturing building was a one story brick structure which was reportedly constructed in 1916. The building was constructed on a slab foundation. Much of the foundation of the former manufacturing building remains on the site.

The power house was a one story brick building located to the south of the factory building. The power house was also reportedly constructed in 1916 and formerly housed the boiler for the manufacturing building. Much of the concrete slab foundation for the power house also remains on the site.

A fenced in sewage pump station, owned by the Town of Whitehall, occupies the southeastern portion of the site.

2.9 Roadways or Driveways on or Adjoining the Site

A paved driveway enters the site from Poultney Street on the eastern portion of the site. The driveway leads to a paved parking area located north of the location of the former manufacturing building. A gravel driveway traverses the eastern portion of the site providing access to the sewage pump station.

2.10 Rights-of-Way and/or Easements (On-Site and Adjacent)

Several easements and rights-of-way are reported to exist for the site including an easement for the municipal sewage pump station. Permanent easements and rights-of-way for the Town of Whitehall have been issued for two earthen berms which lie along the eastern and western portions of the site to control flooding. Other easements consist of utility easements and rights-of-way.

2.11 Surrounding Land Uses

The surrounding land uses, as identified during the site visit, are described as follows:

North - Poultney Street lies north of the site. Martell's Auto, Top Dogs food stand and Express Rental lie north of Poulney Street. An apparently abandoned petroleum tank farm lies to the northwest of the site across from the Champlain Canal and residential properties lie to the northeast of the site across from Wood Creek.

West - The Champlain Canal lies west of the site. Vacant wooded land and River Side Drive lie west of the Champlain Canal.

East - Wood Creek lies east of the site. A Stewart's convenience store and gasoline station, S & S Auto Sales and residential properties lies east of Wood Creek.

South - Lands of the Claredon and Pittsford Railroad Company lie south of the site. A portion of this adjacent property is considered a hazardous waste facility, which lies immediately adjacent to the south side of the site.

3.0 SITE AND SURROUNDING AREA HISTORIC AND RECORDS REVIEW

3.1 Ownership Information

An affidavit of title was provided for the subject site. According to the affidavit, the site was transferred from Champlain Spinners, Inc. to W.M.P. Realties, Inc. in 1959. The affidavit further indicates a certificate of consolidation was filed in 1972 consolidating EB Metal Products Co., Inc., Whitehall Metal Products, Inc., Omega Tool and Stamping Company, Inc. and W.M.P. Realties, Inc. forming EB Metal and Rubber Industries, Inc. EB Metal and Rubber Industries, Inc. was changed to EB Metal Industries, Inc., in 1979.

Old Champlain Mill, Inc. reportedly acquired the site in July 2001 at the Washington County tax sale auction. EB Metal Industries, Inc. was reportedly the owner prior to the tax auction.

The current property owner, Champlain LLC is reported to have purchased the site from Old Champlain Mill, Inc. in 2003.

No environmental liens or activity/land or use limitations are reported by the site contact to exist for the site.

3.2 Sanborn Fire Insurance Maps

Sanborn Fire Insurance Maps do not provide coverage of the subject site. The 1955 index map for Whitehall indicates the site was occupied by "Champlain Spinners, Inc., Plant No. 2", however, specific coverage of the site is not provided. The index map is included in Appendix A as Figure 3.

3.3 Aerial Photographs

Aerial photographs were reviewed for the years 1942, 1981, 1991, 1992 and 1994 at the New York State Center for Geographic Information. Throughout these years the site layout appeared to be similar improved with the factory building and the power house. Original quality copies of the aerial photographs reviewed at the New York State Center for Geographic Information could not be obtained at the time of this report.

A 2001 aerial photograph from the New York State GIS clearinghouse is included in Appendix A as Figure 4. The photograph shows the former site building layout. A 2004 aerial photograph from the New York State GIS clearinghouse is included in Appendix A as Figure 5. The photograph shows the site similar to current conditions.

3.4 Information From the Local Historian

The Village of Whitehall Historian reported that the subject site was used as a silk mill built in 1916 and closed in 1951. Prior to use as a silk mill, the site was reportedly primarily pastureland often times being used as a baseball field. Two houses were reportedly located on the site in the early 1900s.

An undated newspaper article was provided which indicates the site was a swamp that was filled in before it was developed.

3.5 Information From Health Department Official(s)

A Freedom of Information Law (FOIL) request was submitted to the New York State Department of Health, Glens Falls District Office to determine if the Department of Health has records concerning soil or groundwater contamination for the subject site. At the time of this report a response had not been received from the Department of Health. If pertinent information is received, it will be forwarded upon receipt.

3.6 Information From Other Local Official(s)

The Village of Whitehall Department of Public Works reported that municipal water and sanitary sewer service were not available to the subject site until the mid 1970s.

The Village of Whitehall Fire Department reportedly does not have records concerning spills, major fires or hazardous materials for the subject site.

Property assessment cards were reviewed from the Town of Whitehall Assessor's Office. Pertinent information from the assessment cards is included in the appropriate sections of this report.

A FOIL request was submitted to the Washington County Code Enforcement Office to determine if the Code Enforcement Office has records for the site. At the time of

this report a response had not been received from the Code Enforcement Office. If pertinent information is received, it will be forwarded upon receipt.

Written correspondence from municipal officials is included in Appendix C.

3.7 Information From Current or Former Property Owner(s)

Mr. Peter Ward, the current property owner, was interviewed during a telephone conversation following the site visit on Monday, July 31, 2006. Mr. Ward indicated the site was unused between the time the site was purchased to current, with the exception that the site buildings were removed for salvage.

Mr. Ward also indicated the following:

- Several drums and containers were removed from the site by MC Environmental Services. A Uniform Hazardous Waste Manifest for some of the waste was provided and is included in Appendix C.
- An above ground petroleum storage tank was removed from the site and was sold for re-use. The site's PBS registration was reportedly not updated to reflect this change.
- The former water supply well for the site was plugged.
- Three Non-PCB pad mounted transformers were removed from the site prior to the demolition of the site building.
- Asbestos was removed from the site building prior to demolition.

Other information from Mr. Ward is included in the appropriate sections of this report.

Mr. George Story of Champlain Mill, Inc., the former owner of the site, was interviewed during the completion of a Phase I Environmental Site Assessment in 2002. At the time the previous site assessment was completed the site buildings were present on the site but were unoccupied. Information from the previous site owner is included in the appropriate sections of this report.

A former employee of EB Metal Industries, Inc., Mr. Ron Roberts, was also interviewed at the time of the 2002 assessment. Mr. Roberts reported that EB Metals utilized the site as a sheet metal fabrication shop which included a painting process to produce newspaper vending machines. Mr. Roberts had offered the following information:

- Paints used at the site were initially solvent based paints. These paints became obsolete and were replaced with powder paints. The solvent based paints were stored in the power house once they became obsolete. Medium grade solvents were also used on the site.

- No underground storage tanks were located on the site due to the high water table. A 10,000 gallon above ground fuel oil tank was previously located on the site. The tank was decommissioned and removed from the site. The power house housed a fuel oil boiler which was dismantled in the 1970s.

- Appurtenances located on the exterior of the site buildings are reported to be hydrants, dry hydrants and sprinkler shut-offs.

- The site flooded several times including a significant flood in the mid 1980s. This flood was caused by work being completed by the New York State Department of Transportation on a coffer dam. The flood resulted in contamination by solvents on the subject site property. Soil borings and/or monitoring wells were reportedly installed on the site following the flood, but were removed in the late 1980s.

- A pile of scrap metal noted on the southeastern portion of the site is reported to be cigarette vending machines damaged during the flood as well as empty drums.

- Prior to connecting to the municipal sewer system, drainage from the site was to both the Champlain Canal and to Wood Creek. Floor drains within portions of the manufacturing building were reportedly used to collect steam condensation and returned to the power house.

- EB Metal Industries role in the hazardous waste facility located immediately adjacent to the site was limited. Drums which were burned and/or dumped

on this adjoining property were from an off-site source and did not originate from EB Metals. EB Metals role in the hazardous waste facility was limited, and they settled with the state.

3.8 Summary of Previous Environmental Assessments

A Phase I Environmental Site Assessment was conducted for the site in June 2002 by C.T. Male. The assessment identified several recognized environmental conditions associated with the site. A copy of the text portion of the report is included in Appendix F.

3.9 ASTM Federal and State Database Review

Federal and state environmental databases were reviewed in accordance with ASTM E-1527 Standards to determine if the site or nearby surrounding properties are listed on these databases. The databases were searched for the areas within the ASTM recommended search distance, unless otherwise noted. Reviewed databases are listed below. A copy of the database report is included in Appendix D.

3.9.1 Federal National Priorities List (NPL) Facilities

The subject site was not identified as a NPL hazardous waste facility. No NPL facilities were identified within one mile of the subject site.

3.9.2 Federal CERCLA Hazardous Waste Facility List

The subject site was not identified as a CERCLA hazardous waste facility. No CERCLA hazardous waste facilities were identified within ½ mile of the subject site.

3.9.3 Federal Resource Conservation and Recovery Act (RCRA) Treatment, Storage and Disposal (TSD) Facilities List

The subject site was not identified as a RCRA TSD facility. No RCRA TSD facilities were identified within ½ mile of the subject site.

3.9.4 Federal RCRA Generators List and Corrective Action List

The subject site was identified on the RCRA generator list under the following RCRA generator numbers/names:

- NYD001945039, NYSDEC/EB Metal Industries, Inc. The site is listed as a large quantity generator. No violations are listed for the site.
- NYR000132498, Champlain, LLC. The site is listed as a large quantity generator. No violations are listed for the site. According to the current property owner the site was listed as a RCRA generator for the removal of various wastes which were abandoned within the site.

The following immediately adjoining properties were identified as RCRA generator facilities:

- NYD987023009, NYSDOT BIN 4001130, Route 4 over Champlain Canal, located northwest of the site (small quantity generator).
- NYD982790644, NYSDOT BIN 1001120, Route 4 over D & H Railroad, located southwest of the site (no longer regulated).
- NYD013385075, Service Station, 45 Poultney Street, located north of the site (no longer regulated).
- NYD982538118, NYSDEC Barrel Site, US Route 4, located south of the site (this facility was not geo-coded by the database company and is believed to be associated with the hazardous waste site as discussed in section 3.9.6.)
- NYD982790636, NYSDOT BIN 1001140, Route 4 over Wood Creek, located northeast of the site (no longer regulated).
- NY0000027581, Village of Whitehall Wastewater Treatment Plant, located west of the site (no longer regulated).

No violations are listed for these facilities.

The subject site was not identified as a RCRA corrective action facility. No RCRA corrective action facilities were identified within one mile of the subject site.

3.9.5 Federal Emergency Response Notification System (ERNS) List

The subject site was identified on the ERNS list. According to the ERNS report 150 gallons of a chemical mixture were released to a drain which discharged to the canal. A spill for this incident is also listed with the New York State Department of Environmental Conservation (NYSDEC).

3.9.6 State Hazardous Waste Facility List

One State hazardous waste facility was identified within one mile of the subject site. The facility is listed for the address of the subject site (16/50 Poultney Street) and is referred to as the Poultney Street Site. This hazardous waste facility is located along the railroad bed just south of the subject site. The facility is classified as a Class 2 facility, defined as a facility which poses a significant threat to the public health or environment and requires action. The facility consisted of a dump area and a former fire training area. Drums of acetone, trichloroethene, polycyclic aromatic hydrocarbons, phthalates, benzene, toluene, ethylbenzene and xylene were reportedly brought onto the facility from various sources.

One monitoring well (identified as MW-4) exists on the subject site, just north of the hazardous waste facility. The monitoring well was reportedly installed to delineate the magnitude and extent of the contaminant plume emanating from the hazardous waste facility and to assess if the plume had migrated down-gradient beyond the hazardous waste facility property limits.

URS Corporation conducted a sampling event on June 17, 2002 which included the sampling and analysis of surface soil, subsurface soil and groundwater from MW-4. The results from the sampling event for the surface and subsurface soils are included in Appendix E. Based on the letter from URS to the site owner, the groundwater sample from MW-4 did not contain volatile organic compound contamination.

A Record of Decision (ROD) has been prepared for the Poultney Street facility. The ROD calls for excavation of contaminated soils and the monitoring of groundwater for natural attenuation. Groundwater monitoring is indicated to be proposed for "many years (15 presumed)".

3.9.7 State Solid Waste Facility List

The subject site was not identified on the State solid waste facility list. No State listed solid waste facilities were identified within ½ mile of the subject site.

3.9.8 State Petroleum Bulk Storage (PBS) Tank Facilities

The site was identified on the State PBS facilities list. Two PBS registrations were identified for the site, both under the name EB Metal Industries, Inc. PBS No. 5-489220 is listed as "administratively closed". Two above ground fuel oil storage tanks are listed as being closed. The first tank is listed as a 10,000 gallon tank which was installed in 1966 and closed prior to April 1991 either in place or removed. The second tank is listed as a 4,000 gallon tank listed as administratively closed.

PBS No. 5-490563 is listed as an active PBS facility with one active 4,000 gallon above ground fuel oil storage tank and one removed 10,000 gallon above ground fuel oil storage tank.

The following immediately adjoining properties were identified on the State PBS facilities list:

- PBS No. 5-022802, Martell's Auto Service, 45 West Poultney Street, located north of the site. This facility is currently unregulated. Five underground storage tanks were closed by removal at this facility in 1999.

- PBS No. 5-227951, Stewarts Ice Cream Company, 60 Poultney Street, located east of the site. Three active tanks are listed for this facility. Two underground tanks are listed as having been closed prior to 1991.

3.9.9 State Leaking Storage Tanks List

The site was not identified on the state leaking storage tank list. Nineteen leaking storage tank incidents were identified within ½ mile of the site. Of the nineteen, five are located adjacent to the subject site. Three of these incidents are listed for Martell's Auto located north of the site. Spill No. 9909321 is listed as active. According to the spill fact sheet for this incident, considerable subsurface soil and groundwater contamination was found during a tank removal activity at the facility. The second leaking tank incident for this facility is Spill No. 8709177. According to

the spill fact sheet for this incident, tanks at this facility failed a tightness test. The spill was issued a closed status on August 16, 1988. The third leaking tank incident for this facility is Spill No. 9307923 which indicates two tanks failed a tightness test. The tanks are indicated to have been re-tested and passed. The spill was issued a closed status on August 28, 1998.

The other adjacent leaking tank incidents are listed for Stewart's which is located to the east of Wood Creek under Spill Nos. 9100382 and 0409668. Since the incidents at Stewarts and the remaining leaking tank incidents are located either east of Wood Creek or west of the Champlain Canal, impacts to the quality of soils or groundwater at the site are not anticipated as a result of these leaking tank incidents.

3.9.10 Applicable State Lists

The New York State Department of Environmental Conservation (NYSDEC) spills database was reviewed to determine if spills have occurred at the subject site or adjoining parcels. Three spills are listed for the subject site.

- Spill No. 9205797 reportedly involved the release of 150 gallons of a stripping agent. The spill fact sheet does not include many details concerning the spill, but does indicate that the NYSDEC was to inspect the site with particular attention paid to the stripping area where chemicals would overflow into the grates. The spill was issued a closed status on August 21, 1992, three days following the day the spill was reported.

- Spill No. 9514114 was reported on February 6, 1996 due to possible deliberate dumping. According to the spill fact sheet, the site was inspected and no issues were noted. The spill was issued a closed status on November 14, 1996.

- Spill No. 0550304 is listed for 50 Poultney Street. According to the spill fact sheet, which provides limited information, one gallon of an unknown hazardous material was released from an abandoned drum. The spill was issued a closed status on November 23, 2005. According to the current property owner, the spill occurred during the removal of drums from the site. The leak reportedly occurred from a damaged drum which was over-packed and removed.

The following spills were identified for the immediately adjoining parcels:

- Spill No. 89003064 is listed under the name EB Metals, however, it appears that this spill was the initial reporting of the hazardous waste facility located south of the site as discussed in section 3.9.6. The spill was reported on June 21, 1989 due to a landfill area which contained leaking drums and piping which lead to an oily pit and a tar pit. According to the spill fact sheet, the spill was turned over to the Division of Hazardous Waste Remediation.

- Spill No. 9707351, Martell's Service Center/Mobil located north of the site. According to the spill report the facility collected junk cars and deliberately dumped spent solvents on the ground. This spill was issued a closed status on July 11, 2000, though the rational for closing the spill is not provided. The spill is indicated as not meeting NYSDEC standards.

- Spill No. 9206439, Route 4 @ Canal west of the site. According to the spill fact sheet, diesel contamination was found while test borings were being completed for construction purposes. The spill was issued a closed status on November 2, 1998 with the notation that the file was inactive for four years. The spill is indicated as not meeting NYSDEC standards.

- Spill No. 9908136, Bay View Gardens, 51 Poultney Street located northeast of the site. According to the spill fact sheet for this incident, raw sewage was released from a damaged sewer pipe. The spill was issued a closed status on October 5, 1999. The spill is indicated as not meeting NYSDEC standards.

- Spill No. 0406869, Stewart Shop #211, 60 Poultney Street located east of the site According to the spill fact sheet, nine gallons of gasoline were released due to a tank overfill. The spill was issued a closed status on September 22, 2004.

- Spill No. 0211231, Stewarts, 60 Poultney Street, located east of the site. According to the spill fact sheet, 25 gallons of gasoline were released for an unknown reason. The spill was issued a closed status on July 8, 2003.

- Spill No. 0409206, Stewarts #211, 60 Poultney Street, located east of the site. No details are provided in the spill fact sheet for this incident. The spill was issued a closed status on September 30, 2005.

- Spill No. 0402441, Stewarts #211, 60 Poultney Street, located east of the site. According to the spill fact sheet, five gallons of gasoline were released due to an equipment failure. The spill was issued a closed status on July 28, 2004.

- Spill No. 0208546, Stewarts Shop, 60 Poultney Street, located east of the site. No details are provided in the spill fact sheet for this incident. The spill was issued a closed status on January 7, 2003.

- Spill No. 0409086, Wastewater Plant, 25 Riverside Drive, located west of the site. No details are provided in the spill fact sheet for this incident. The spill was issued a closed status on January 1, 2005.

4.0 SITE VISIT

4.1 Conditions of the Visit

4.1.1 Site Contact(s)

Mr. Peter Ward was the site contact but was not able to be present during the site visit.

4.1.2 Date of Visit

The site visit was conducted on Monday, July 24, 2006 by Ms. Aimee Gates of C.T. Male Associates, P.C. During the site visit the weather was approximately 85°F with sunny skies.

4.1.3 Ground Cover

The concrete slab foundation of the former manufacturing building is situated near the center of the subject site. A majority of the slab remains intact, however, the mid portion of the foundation has been partially removed. To the north of the former manufacturing building is a paved parking area and driveway, limited overgrown lawn area and a marsh area is located along Poultney Street. A gravel driveway is located east of the former manufacturing building and a heavily wooded area is located southeast of the former site building. Overgrown lawn and marsh areas are located south and west of the former building.

Remains of the former site buildings are primarily located in several piles staged on the southeastern portion of the slab foundation. Brick and other building debris was noted surrounding the building foundations.

4.1.4 Areas Observed

The site and surrounding areas were observed from Poultney Street and the approximate site boundaries. The central portions of the site were traversed. Observation of portions of the site were limited due to heavy vegetation including the fenced area surrounding a pole mounted capacitor. Photographs taken during the site visit are included in Appendix B.

4.2 Uses of Site Buildings and Structures

Other than the brick smoke stack and fenced in pump station, no buildings or structures are currently located on the site.

The former building was used for manufacturing. The former power house reportedly housed the boiler at one time and was most recently used for the storage of obsolete materials and trash.

4.3 Site Utilities

No utilities are currently used on the site.

Electricity was formerly supplied to the site by National Grid. Municipal water and sewer service was previously provided by the Village of Whitehall.

The site reportedly relied on a private drilled well prior to the availability of municipal water in the site area.

4.4 Transformers/Capacitors (Liquid Filled Only)

Several pole mounted transformers were identified on the site during the site visit. They include two single pole mounted transformers and a set of three pole mounted transformers on the northern portion of the site along Poultney Street. These transformers appeared to have a Non-PCB label and no evidence of leakage was noted from the transformers.

Two sets of three pole mounted transformers were identified on the site; one along the southern property boundary and one on the northwestern portion of the site. No PCB related labeling was noted on the transformers. Evidence of leakage was not noted from the transformers.

A pole mounted capacitor was identified to the east of the pole mounted transformers noted on the northwestern portion of the site within a fenced area. No PCB related labeling was noted on the capacitor. Evidence of leakage was not noted from the capacitor.

4.5 Asbestos Containing Materials (ACM)

According to the site contact, asbestos containing materials were removed from the site buildings prior to the demolition activities. The site contact was unwilling to provide documentation concerning the asbestos material survey or abatement project. A waste shipment record was provided and is included in Appendix C.

Based on the lack of documentation provided, C.T. Male Associates, P.C. can not comment on the completeness of the asbestos abatement completed at the site.

4.6 Site Surface Water Bodies/Areas

The Champlain Canal borders the site to the west and Wood Creek borders the site to the east. Marsh areas and areas containing standing water were noted throughout the site. No staining or sheens were noted on the surface water bodies at the time of the site visit.

4.7 Site Drainage

4.7.1 Site Catch Basins and Discharge Location(s)

Catch basins style floor drains were identified within the slab foundation remains of the former manufacturing building. Floor drains within the building are discussed below. No catch basins were identified outside of the foundation footprint during the site visit.

4.7.2 Building Floor Drains and Discharge Location(s)

Floor drains were identified throughout the eastern and central portions of the slab foundation of the former manufacturing building. According to a former employee of the site, some of the floor drains were used to return condensate to the power house. Other floor drains were reportedly connected to the municipal sewer system. The floor drains reportedly previously discharged to Wood Creek and the Champlain Canal and may have discharged to subsurface disposal features. The actual discharge points for the drains were not confirmed and no drawings of the various systems were made available for review. At the time of the site visit some of

the floor drains within the manufacturing building foundation remains contained standing water while others were plugged with debris.

4.7.3 Dry Wells and Sumps

During the previous environmental site assessment of the site prior to the demolition of the site building, several pipes were observed exiting the exterior walls of the north and south sides of the main site building. On the north side of the site building several pipes were observed which appeared to drain to a brick lined pit located adjacent to the building. Pipes below ground level were also observed exiting and entering the pit. The pit and piping appear to have been compromised due to demolition activities and were not identified during the site visit for this assessment. It is not known if this former pit represented a dry well, or if the other pipes which previously exited the building drained to on-site dry wells.

No sumps were identified on the site during the site visit. According to the site contact, no sumps are located on the site.

4.8 Site Waste Profile

4.8.1 Solid Wastes/General Trash (Generation/Storage/Disposal)

Demolition remains of the former site buildings are primarily located on the southeastern portion of the foundation of the former manufacturing building. One of the piles appears to consist primarily of brick. The remaining piles appear to be primarily comprised of wood, but were also noted to contain fiberglass insulation, roofing materials, scrap metal and piping, tires, drums and containers. Brick and concrete were also observed in smaller quantities throughout the building foundation areas.

Just south of the southeast corner of the former manufacturing building foundation a pile of household type trash was observed which contained bagged trash, furniture, toys, dimensional wood and other household type wastes.

A waste pile which appeared to consist primarily of metal and drums was identified within the wooded area on the southeastern portion of the site during the site visit.

4.8.2 Sludges (Generation/Storage/Disposal)

No sludge wastes were identified on the site during the site visit. According to the site contact, no sludges are currently generated, stored or disposed of on the site.

4.8.3 Liquids (Generation/Storage/Disposal)

No liquid wastes is currently generated on the site. Based on the information gathered during the previous environmental site assessment of the site, liquid wastes generated by the previous site tenant included waste oil, waste solvent, and waste paint.

4.8.4 Wastewater Discharge(s)

No wastewater is currently discharged on the site. Previous wastewater discharges were reportedly generated from a five stage washing system prior to the metal components being painted. The wastewater was reportedly flushed to the sewer, although some drums identified during the previous assessment of the site were labeled as containing wastewater. Prior to connection to the municipal sewer, these discharges may have been to the canal located west of the site or to the creek located east of the site, or potentially to subsurface disposal features. According to the site contact, no wastewater is currently generated on the site.

4.8.5 Waste Lagoons or Disposal Pits (Current and Historic)

No waste lagoons or disposal pits were identified on the site during the site visit. According to the site contact, no current or historic waste lagoons or disposal pits are located on the site.

4.8.6 On-site Septic Systems

No septic systems were identified on the site during the site visit. The site is reportedly connected to the Village of Whitehall municipal sewer system. Prior to connection to the municipal sewer system, drainage from the site is reported to have been to the canal on the west side of the site and to the creek on the east side of the site. Since the site was developed in the early 1900s and municipal sewer was not

available until the 1970s, there is a potential that former septic systems were previously used on the site.

4.8.7 Waste Drums/Containers

Numerous drums and containers of waste were reportedly removed from the site in 2005. These materials were identified during the previous ESA of the site and were reportedly left behind by the former site owner, E.B. Metals. The drums of wastes include flammable solids, waste oil, wastewater, waste solvent and waste paint.

Approximately 20 drums and containers were noted during the site visit within the building remains. Many of the drums could not be assessed for their potential contents due to their locations within the piles, however, the current property owner reported that the drums and containers are empty. At least one of the five gallon containers appeared to contain product.

A five gallon container was also noted on the manufacturing building foundation remains to the north of the former power house. Evidence of leakage was noted from the container onto the concrete foundation. The material appeared to be roofing tar.

4.8.8 Raw Product Drums/Containers

No drums of raw product were identified on the site during the site visit.

4.9 Underground (UG) and/or Above Ground (AG) Storage Tanks

No underground or above ground storage tanks were identified on the site during the site visit. According to the site contact, a 4,000 gallon above ground storage tank was removed from the site in 2003.

According to the site contact, no underground storage tanks are located on the site.

4.10 Observed Evidence of Potential or Known Site Contamination

4.10.1 Evidence of Soil Contamination/Liquid Discharges

As noted in section 4.8.7, a stained area, which appeared to be comprised of roofing tar, was noted on the former factory building slab just north of the former power house. No other evidence of soil contamination or liquid discharges was identified on the site during the site visit. The site contact was not aware of soil or groundwater contamination from either on-site or off-site sources.

4.10.2 Soil or Surface Disturbances

Earthen dikes are present along the eastern and western portions of the property used to control flooding from the Champlain Canal and Wood Creek. The dikes were reportedly originally developed in the 1930s and were enhanced in the mid 1980s after a flood event.

4.10.3 Evidence of Waste Deposits (Piles/Pits/Landfills/Lagoons)

As noted in section 4.8.1, various waste deposits were noted on the site. The waste deposits consisted of building demolition remains (brick, concrete, wood, insulation, metal, piping, drums and containers etc.), household type wastes which were dumped on the site and a waste pile which consisted primarily of metal and drums.

5.0 FINDINGS, OPINION AND CONCLUSIONS

5.1 Findings

The subject site has been used for manufacturing purposes since the early 1900s. The mill was reportedly originally used to manufacture silk, and from 1959 to 2001 to manufacture metal vending machines. The buildings associated with these prior uses were demolished in 2003, with the exception of a brick smoke stack which remains on-site.

The site was identified on several environmental databases and lists. Two Petroleum Bulk Storage Registrations were identified for the site. Additionally, three spills with the New York State Department of Environmental Conservation and one emergency response notification system (ERNS) report and were identified for the site. The site was also identified as a RCRA generator.

Several other facilities were identified on the environmental databases and lists within the specified search radii. These include two facilities immediately adjoining the site; one to the north which was identified as a RCRA generator, an active leaking tank incident and as having a spill; and one to the south of the site which is a hazardous waste facility.

Approximately 20 drums and containers were identified on the subject site. According to the current property owner, the drums which remain on the site are empty. A number of drums are indicated to have been removed from the site following the demolition of the site building. At least one of the containers appeared to have some contents, another, containing what appeared to be roofing tar, was observed to have spilled its contents onto the concrete foundation remains.

Several floor drains were noted throughout the foundation remains. Several outlet pipes were identified during the previous environmental site assessment of the site which existed along the southern and northern exterior walls of the site building. Additionally, it is reported that municipal sewer was not available to the subject site until 1976. It is unknown if disposal features such as dry wells or septic systems were used on the site prior to 1976. A potential dry well was identified during the

previous assessment of the site. The potential dry well appears to have been destroyed due to the demolition activities.

A flood reportedly occurred at the subject site in the mid 1980s. According to a previous employee of EB Metals, the flood resulted in contamination of groundwater at the site.

Piles of debris were noted on the site consisting of building demolition debris (including brick, concrete, dimensional wood, insulation and scrap metal), household debris, drums and containers and a scrap metal pile.

Surface disturbances were noted on the site during the site visit including two earthen dikes along the east and west sides of the site. The dikes were reportedly originally constructed in the 1930s and enhanced in the 1980s. Fill materials are also indicated to have been brought into the site prior to site development.

5.2 Opinion

It is our opinion that the information and data collected during this Phase I ESA indicates the presence or likely presence of hazardous substances or petroleum product within the site under conditions which indicate an existing release, past release or material threat of a release. This opinion is based on the former use of the site for manufacturing purposes for almost 100 years and documentation concerning the storage and disposal practices is not available for the length of time that the facility has been in operation. There is a potential that hazardous materials or petroleum products were disposed of on the subject site. These methods may have included the use of on-site disposal features such as septic systems, leach fields or dry wells since municipal sewer was not available to the site until 1976. Former drainage may have included discharges into the Champlain Canal and Wood Creek.

Although closure status was issued to the spills associated with the subject site, it is our opinion that these spills are indications that materials may have been mismanaged while the site was in operation. Limited information is provided within the spill fact sheets and therefore the basis of the closure status of these spills is not known.

It is our opinion that the contents, if any, of the remaining drums and containers should be verified and removed from the site for proper disposal including the substance which appeared to be roofing tar which had leaked from a five gallon container. Because the material appeared to be confined to the concrete surface, it is our opinion that this situation appears to be *de minimis*, that is this condition does not appear to present a threat to human health or the environment.

Several piles demolition debris remain on the site including brick, concrete, wood, insulation and metal, piping. According to the site contact, the demolition debris does not contain asbestos containing materials, as these materials were removed from the site building prior to demolition. Although there materials do not appear to be a source of soil or groundwater contamination, they should be removed from the site for proper disposal. Some of the material such as brick and concrete have the potential to be used as clean fill materials.

Other wastes identified on the site include household type wastes which were dumped on the site and a waste pile which consisted primarily of metal and drums located in the wooded area on the southeastern portion of the site. It is our opinion that these materials should be removed from the site for proper disposal.

Fill materials appear to have been brought onto the subject site from off-site sources for construction of berms located along the Champlain Canal and Wood Creek and prior to the development of the site as a silk mill. The source of these materials is unknown and therefore it is our opinion that these fill materials have the potential to be materials other than clean fill.

It is our opinion that since the site has been impacted by several floods, possibly dating to the 1930s, coupled with use and storage of various chemicals on the site, that these conditions have had the potential to impact soil or groundwater at the site.

It is our opinion that the remaining equipment located on the site including the non-labeled pole mounted transformers and capacitor, have the potential to contain Poly-Chlorinated Biphenyls (PCBs). Evidence of a release from this equipment was not identified on the site during the site visit.

It is our opinion that there is a potential for contamination from off-site sources including the neighboring garage and previous gasoline station to the north of the

site. A ROD has been issued for the hazardous waste facility located to the south of the site. The ROD calls for continued groundwater monitoring which may include the monitoring well located within the bounds of the site.

It is our opinion that the Petroleum Bulk Storage registration for the site be changed to indicate the removal of the 4,000 gallon tank.

5.3 Conclusions

C.T. Male has completed a Phase I Environmental Site Assessment for the Old Champlain Mill Site in general conformance with the scope and limitations of ASTM Practice E 1527. This assessment has revealed no evidence of recognized environmental conditions in connection with the property except for the following:

The site has been used for manufacturing purposes since 1916. Based on available information, it appears that the site used, stored and potentially disposed of chemical materials on the site. Municipal sewer was reportedly not available to the site until the mid 1970s. Prior to connection to the municipal sewer, drainage was reportedly to Wood Creek and to the Champlain Canal. Other disposal methods may have included septic systems, leach fields or dry wells. Further assessment would be necessary to determine if the former industrial use of the site has had an impact to the quality of soils, groundwater or sediments at the site.

Further assessment would be necessary to determine if the use, storage and potential disposal of the various materials previously generated and stored on the site has had an impact to the quality of soils or groundwater at the site. Further assessment would be necessary to verify that the drums noted within the debris piles located on the site, in particular the pile located on the southeastern portion of the site, were empty at the time of disposal.

The subject site has reportedly been impacted by several floods, possibly dating to the 1930s. According to a previous employee of the site, a flood which occurred in the 1980s impacted groundwater at the site. Further assessment would be necessary to determine if the historical floods at the site have impacted the quality of soils or groundwater at the site.

The site is bound to the south by a confirmed hazardous waste disposal facility. This facility appears to be immediately adjacent to the subject site. A groundwater monitoring well was installed on the subject site as a down-gradient monitoring point for the hazardous waste facility. A former gasoline station borders the site to the north on the opposite side of Poultney Street. An active leaking storage tank incident is listed for this facility. Further assessment would be necessary to determine if these off-site sources have had an impact to the quality of soils or groundwater at the site. This assessment may include reviewing files at the New York State Department of Environmental Conservation.

Fill materials from unknown sources appear to have been utilized at the subject site. Further assessment of these materials would be necessary to determine if the presence of the fill materials has had an impact to the quality of soils or groundwater at the site.

The information presented in this report is limited to the investigation conducted as described in the referenced ASTM guidelines for conducting environmental site assessments, and is not necessarily all inclusive of conditions present at the subject site. Due to inherent limits of time and cost, uncertainty about site conditions remains. If you have any questions regarding this report, please contact this office at (518) 786-7400.

Respectfully submitted,

C.T. MALE ASSOCIATES, P.C.

DRAFT

Aimee Gates
Environmental Scientist

Reviewed and approved by:

DRAFT

Kirk Moline
Project Manager

K:\Projects\066448\Admin\R old champlain mill ESA.doc
August 7, 2006

APPENDIX A

Figures/Maps

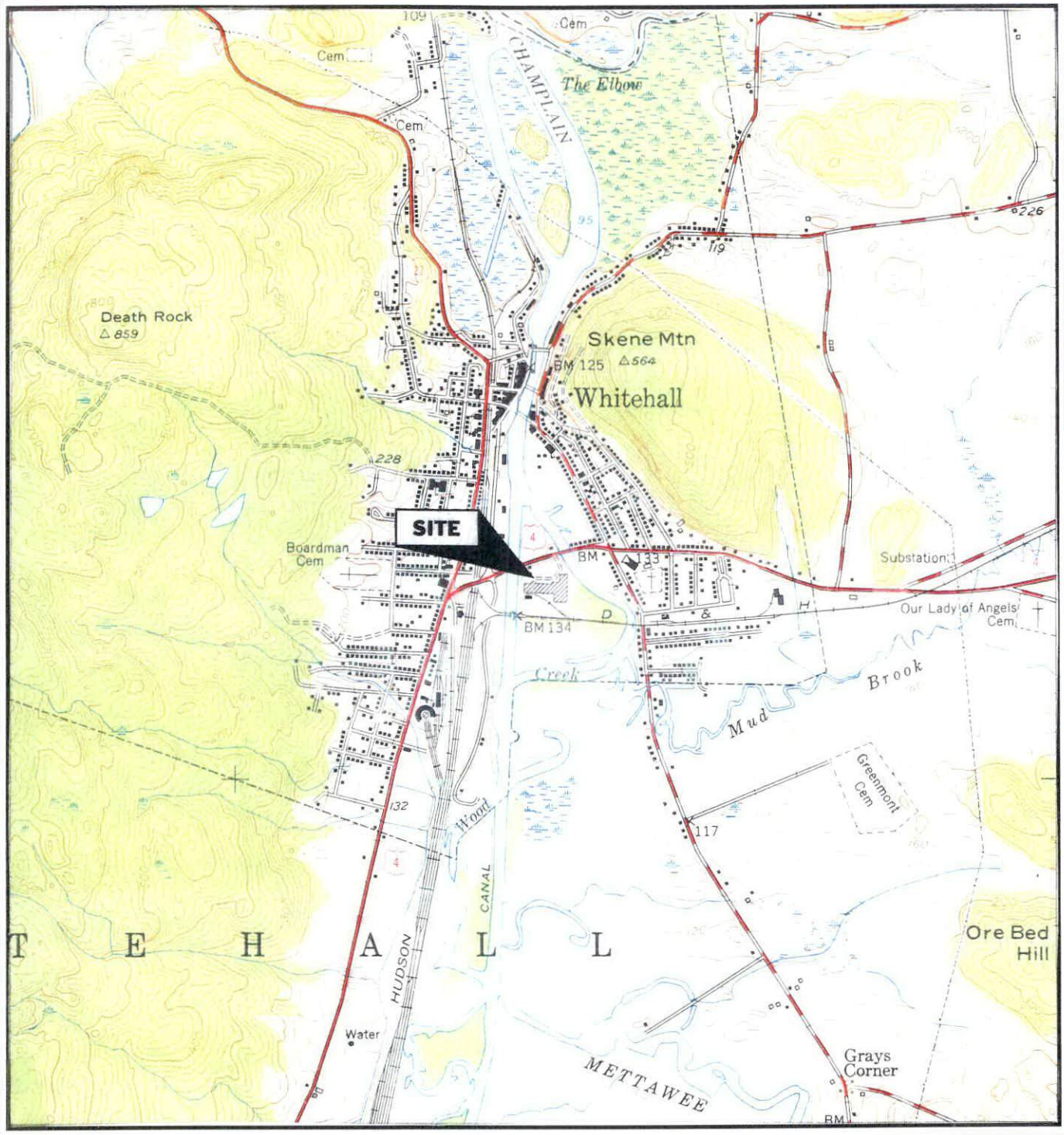

MAP REFERENCE
United States Geological Survey
7.5 Minute Series Topographic Map
Quadrangle: Whitehall, NY
Date: 1950

N
W
E

ENGINEERING
ENVIRONMENTAL SERVICES
SURVEYING
PHONE (518)786-7400
FAX (518) 786-7299

C.T.MALE ASSOCIATES, P.C.
50 CENTURY HILL DRIVE, PO BOX 727, LATHAM, NY 12110

FIGURE 1 SITE LOCATION MAP

OLD CHAMPLAIN MILL

VILLAGE OF WHITEHALL	WASHINGTON COUNTY, NY
SCALE: 1:24,000	
DRAFTER: ASG	
PROJECT No.	

FIGURE 2

Site Plan Map

FIGURE 3

Sanborn Fire Insurance Map Index

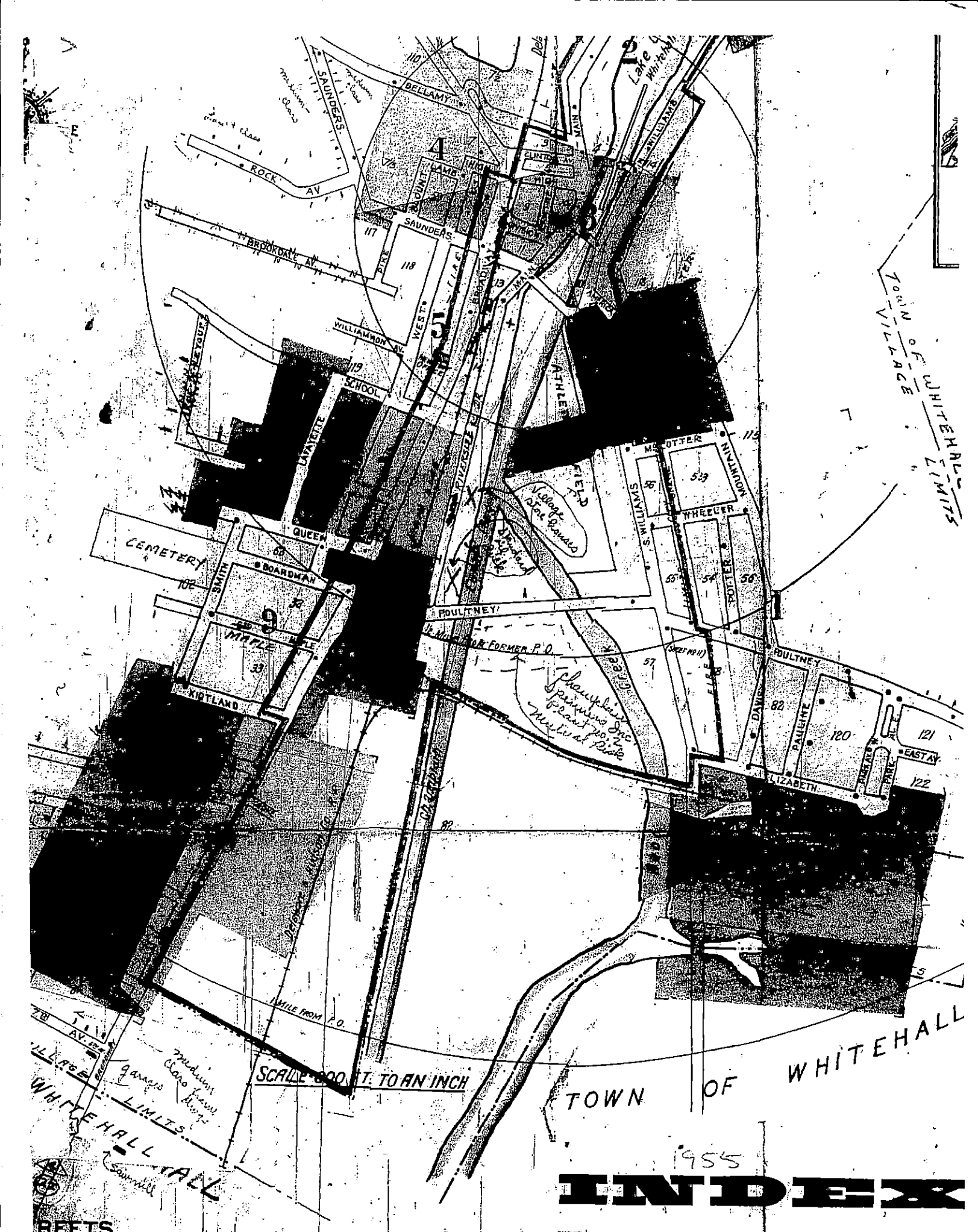

INDEX

REETS

A	SHEET	F	SHEET	N	SHEET	We
1-32	10	Fifth Ave.,	10	Nancy,	11	
		First Ave	10			

FIGURE 4

2001 Aerial Photograph

Overview

Map Layers

Transportation

Interstate & Major Highways

0 100 200

feet

16-50 POULTNEY STREET

Village of Whitehall, Washington County, New York

FIGURE 5

2004 Aerial Photograph

Overview

Map Layers

Transportation

Interstate & Major Highways

0 100 200

feet

16-50 POULTNEY STREET

Village of Whitehall, Washington County, New York

Overview

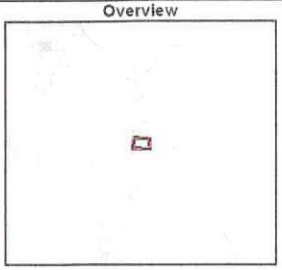

Map Layers

Transportation

Interstate & Major Highways

0 100 200

feet

16-50 POULTNEY STREET

Village of Whitehall, Washington County, New York

APPENDIX B

Site Visit Photographs

PHASE I
ENVIRONMENTAL SITE ASSESSMENT REPORT
OLD CHAMPLAIN MILL SITE

PHOTO LOG

NUMBER	DESCRIPTION
1.	A view of the site from Poultney Street looking south across the central portion of the site.
2.	A view along the southern portion of the site looking west showing the on-site monitoring well and stack.
3.	A view along the eastern boundary of the site showing the access road to the pump station and the berm along Wood Creek.
4.	The remains of the foundation on the western portion of the site looking east.
5.	The remains of the foundation on the eastern portion of the site looking south showing the lumber, brick and scrap metal piles.
6.	A view of the metal waste pile noted on the southeastern portion of the site.
7.	Waste pile identified on the southeastern portion of the site consisting of household type debris.
8.	The brick lined pit observed along the northern foundation wall of the central portion of the site building.
9.	The sewage pump station located on the southeast portion of the site.
10.	Drums and containers noted in a wood pile on the southeastern portion of the building foundation.
11.	A typical catch basin style floor drain located within the foundation remains.
12.	A typical floor drain located within the foundation remains.

1

2

3

4

5

6

7

8

9

10

11

12

APPENDIX C

References

- Documents Reviewed
- List of People and Agencies Contacted

PHASE I
ENVIRONMENTAL SITE ASSESSMENT REPORT
OLD CHAMPLAIN MILL SITE

DOCUMENTS REVIEWED

1. Aerial Photographs of the Whitehall Quadrangle for the years: 1942, 1981, 1991, 1992 and 1994. Courtesy of the NYS Department of Transportation.

2. EPA's Comprehensive Environmental Response Compensation and Liability Information System, June 8, 2006.

3. EPA's Emergency Response Notification System, December 31, 2005.

4. EPA's National Priority List, April 10, 2006.

5. EPA's Resource Conservation & Recovery Information System, April 16, 2006.

6. EPA's Resource Conservation and Recovery Information System, Listing of Transportation, Storage and Disposal Facilities, April 16, 2006.

7. Fire Insurance Maps from the Sanborn Map Company Archives. Late 19th Century to 1990: New York University Publications of America. Bethesda, Maryland (New York State Library).

8. New York Solid Waste Facilities Listing Report, May 3, 2006.

9. New York State Department of Environmental Conservation Region 5 list of active and closed spill files, March 1, 2006.

10. New York State Department of Environmental Conservation, Division of Hazardous Waste Remediation "Inactive Hazardous Waste Disposal Sites in New York State, " Region 5, June 15, 2006.

11. New York State Department of Environmental Conservation, Region 5 Petroleum Bulk Storage Registration List, January 1, 2002.

12. Phase I Environmental Site Assessment for the Old Champlain Mill Site, prepared by C.T. Male Associates, P.C., dated June 28, 2002 (Draft Version)

13. Site Subdivision Plan entitled "Old Champlain Mill Inc.", prepared by David Bolster, dated May 13, 2002.

14. Soil Conservation Service Mapping for Washington County, New York, 1975.

15. Surficial Geologic Map of New York, Hudson Mohawk Sheet, 1987.

PHASE I
ENVIRONMENTAL SITE ASSESSMENT REPORT
OLD CHAMPLAIN MILL SITE

DOCUMENTS REVIEWED
(Continued)

16. Title Information reference – Bargain and Sale Tax Deed for the subject site.

17. United States Geological Survey Topographic Map of the Whitehall, NY Quadrangle, 1950, 7.5 Minute Series.

PHASE I
ENVIRONMENTAL SITE ASSESSMENT REPORT
OLD CHAMPLAIN MILL SITE

LIST OF PEOPLE AND AGENCIES CONTACTED

1. Champlain LLC, Mr. Peter Ward.
2. New York State Department of Health, Glens Falls District Office.
3. Village of Whitehall Clerk, Ms. Joan Douglas.
4. Village of Whitehall Historian.
5. Village of Whitehall Department of Public Works.
6. Village of Whitehall Fire Department.
7. Town of Whitehall Assessor's Office
8. Town of Whitehall Clerk, Ms. Janet Jillson.
9. Washington County Code Enforcement Office, Mr. William McCarty.

Records of Communication

C.T. MALE ASSOCIATES, P.C.

50 Century Hill Drive, P.O. Box 727, Latham, New York 12110-0727
518.786.7400 FAX 518.786.7299 ctmale@ctmale.com

July 28, 2006

Mr. William McCarty
Code Enforcement Officer
Washington County
383 Broadway
Fort Edward, New York 12828

Re: FOIL Request
Phase I Environmental Site Assessment
Former EB Metals Site
CTMA Project No.: 06.6448

Dear Mr. McCarty:

Our office is completing a Phase I Environmental Site Assessment for the above listed site which is located at 16-50 Poultney Street in the Village of Whitehall. The site was formerly occupied by EB Metals and is commonly known as the Old Champlain Mill. The site is referenced with tax map number 60.6-1-5. Enclosed please find a site location map.

Pursuant to the Freedom of Information Law (FOIL) the following information is requested:

- Building permits for the site
- Demolition permits for the site
- Violations for the site
- Underground storage tank installation or removal permits for the site
- Asbestos abatements for the site

Our office will gladly compensate your office for any copying or postal/fax expenses. Please call this office before any copies are made with the total fee if the total fee exceeds $10.00. Our fax and mailing address are indicated above. If you have any questions or comments regarding this request, please feel free to contact our office at (518) 786-7551. Your assistance is greatly appreciated.

Sincerely,
C.T. MALE ASSOCIATES, P.C.

Aimee Gates
Environmental Scientist

C.T. MALE ASSOCIATES, P.C.

50 Century Hill Drive, P.O. Box 727, Latham, New York 12110-0727
518.786.7400 FAX 518.786.7299 ctmale@ctmale.com

July 25, 2006

Mr. Robert LoCicero, Esq.
Records Access Officer
New York State Department of Health
Suite C-144
Empire State Plaza, Corning Tower Building
Albany, New York 12237

Re: FOIL Request
Former EB Metals
CTMA Project No.: 06.6448

Dear Mr. LoCicero:

Our office is completing a Phase I Environmental Site Assessment for the above listed site which is located at 16-50 Poultney Street in the Village of Whitehall, Washington County, New York. The site is located on the Whitehall, NY USGS Quadrangle. Enclosed please find a site location map.

Pursuant to the Freedom of Information Law (FOIL), please indicate any Health Department records for groundwater, soil and/or surface water contamination at the subject site or immediate surrounding parcels.

C.T. Male Associates, P.C. will reimburse for copying expenses. Please call this office at (518) 786-7400 before copies are made.

If you have any questions or comments regarding this request, or need additional information, please feel free to contact our office at (518) 786-7551 or a.gates@ctmale.com. Your assistance is greatly appreciated.

Sincerely,
C.T. MALE ASSOCIATES, P.C.

Aimee Gates
Environmental Scientist

C: New York State Department of Health, Glens Falls District Office

C.T. MALE ASSOCIATES, P.C.

50 Century Hill Drive, P.O. Box 727, Latham, New York 12110-0727
518.786.7400 FAX 518.786.7299 ctmale@ctmale.com

July 13, 2006

Ms. Janet Jillson
Town Clerk/Records Access Officer
Town of Whitehall
142 Main Street
Whitehall, New York 12887

Ms. Joan Douglas
Village Clerk/Records Access Officer
Village of Whitehall
One Saunders Street
Whitehall, New York 12887

Re: FOIL Request
Phase I Environmental Site Assessment
Former EB Metal/Old Champlain Mill Site
CTMA Project No.: 06.6500

Dear Ms. Jillson and Ms. Douglas:

Our office is completing a Phase I Environmental Site Assessment for the above listed site which is located at 16-50 Poultney Street in the Village of Whitehall. The site is referenced with tax map number 60.6-1-5. Enclosed please find a site location map.

Pursuant to the Freedom of Information Law (FOIL) the following information is requested:

Assessment Records:
- Copies of the property tax assessment cards (current and former)
- Indicate current and former owners, date of purchase, book and page (or copy of deed if available)

Building Department Records:
- Building permits for the site for major structures
- Demolition permits for the site
- Violations for the site
- Underground storage tank installation or removal permits for the site
- Asbestos abatements for the site
- Zoning classification for the site

Historian Records:
- Previous use of the site, including previous owners if available
- General previous use of the site area

Engineering Records:

- If municipal services (water, sanitary sewer, storm sewer) are provided to this site please verify and identify dates of connection (if available)

Fire Department Records:

- Underground or above ground storage tanks;
- Major fires;
- Spills;
- Hazardous materials.

Clerk's Records:

- Records of environmental related liens, violations or notices for the site
- Identify solid waste facilities within ½ mile of the site

Five copies of this letter are provided for your use to distribute to the various referenced departments.

Our office will gladly compensate your office for any copying or postal/fax expenses. Please call this office before any copies are made with the total fee if the total fee exceeds $20.00. Our fax and mailing address are indicated above. If you have any questions or comments regarding this request, please feel free to contact our office at (518) 786-7551. Your assistance is greatly appreciated.

Sincerely,
C.T. MALE ASSOCIATES, P.C.

Aimee Gates
Environmental Scientist

/asg

Village of Whitehall
Birthplace of the United States Navy
Settled 1759

P.O. Box 207
1 Saunders Street
Whitehall, New York 12887
(518) 499-0871 Fax (518) 499-1120

Patricia A. Norton
Mayor

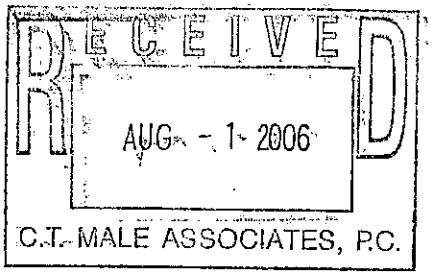

July 26, 2006

C.T. Male Associates, P.C.
50 Century Hill Drive
P.O. Box 727
Latham, New York 12110-0727

Attention: Aimee Gates
Environmental Scientist

Re: Former EB Metal/Old Champlain Mill Site

Dear Aimee:

The following is offered in response to your FOIL request of July 13th on the above subject:

Assessment Records- The Village of Whitehall is not an assessing unit, therefore this information would need to be accessed through the Town of Whitehall

Building Department Records- The zoning classification for this site is light industrial or recreation/park depending on the exact location of the portion of the parcel you are referencing. All other information regarding building or demolition permits or violations of that nature would be handled by Washington County Code Enforcement, 383 Broadway, Fort Edward, NY 12828.

Historian Records- The Village Historian advises me that the Silk Mill was built in 1916 and closed in 1951. Prior to 1916 the property was primarily pasture land often times being used as a baseball field. In addition, two houses were constructed on a portion of this property in the early 1900's.

Engineering Records- Municipal water and sanitary sewer services are provided to this site. The construction date of these services is unknown. The Village owns and maintains a pump station on this site for which an easement was granted by E.B. Metals. This was built in the late 1970's. The storm water collection system, if it is still in place, was privately constructed.

Fire Department Records- Neither of the volunteer fire companies in the Village were able to provide me with any documentation regarding this site.

Clerk's Records- I have enclosed copies of the documents which I discussed with you regarding the remediation of this site. Please be advised that there are no solid waste facilities within ½ mile of this location.

Enclosed you will find our invoice for the copies provided to you.

Very truly yours,

Joan C. Douglas
Clerk-Treasurer

enc. (85 copies)

pc: file

Village of Whitehall
Zoning Map
1998

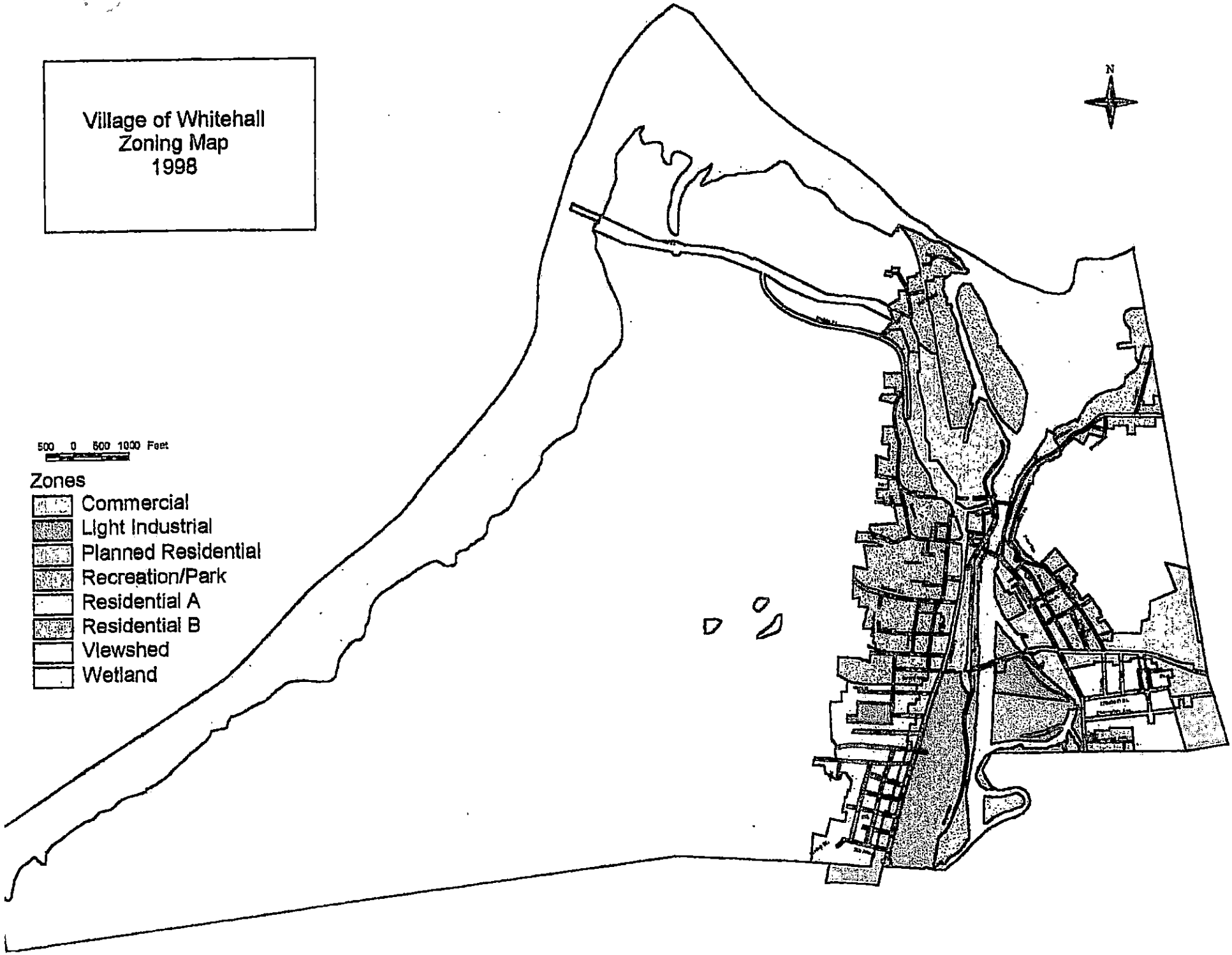

Whitehall's Picturesque Mill Grounds

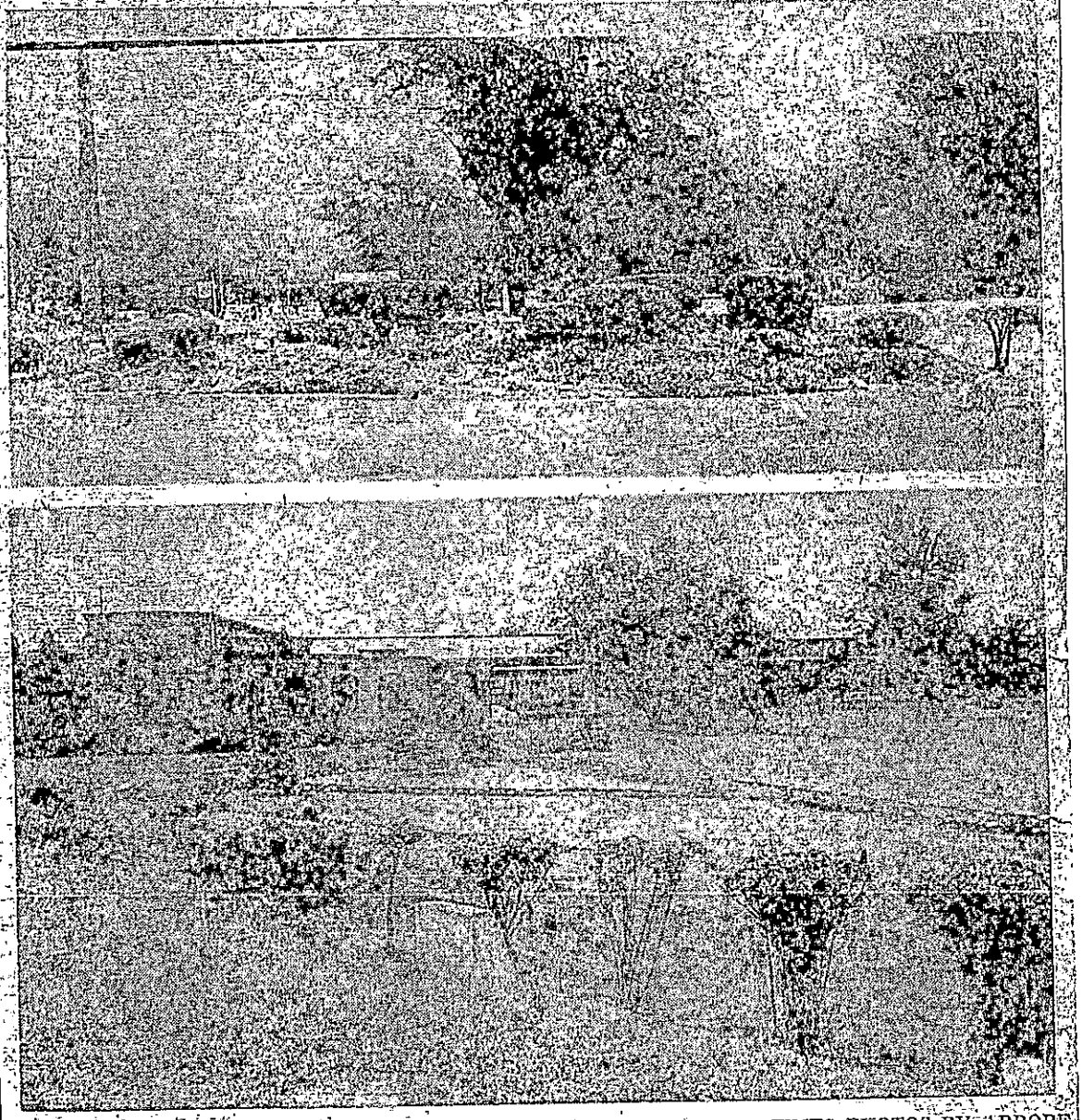

TIMES PHOTOS BY ARBORE

These beautifully-kept grounds are not only admired by the people of this community but also by the many tourists who travel through Whitehall and stop to admire the scenery and the carpet-like lawn. The management of the Champlain Spinners, as well as the employees, take pride in this property in front of Mill No. 2 on Poultney street.

The man responsible for the splendid sight is Mitchell LaChapelle, the groundsman, who devotes a full week maintaining the grass and the rock garden shown in our top picture. Mr. LaChapelle says that since he has been in charge of the grounds, hundreds of people have stopped to admire the lawns. They ask how he manages to get such a perfectly smooth surface as well as keeping it looking so rich. Mr. LaChapelle will invariably answer that this is done through hard work, regular cutting and plenty of watering.

The grounds were first cultivated when the new mill was built, but the rock garden was added when the dykes were built in pre-war W.P.A. days. All kinds of flowers surround this corner at the entrance to the mill and it is here that tourists have their pictures taken with the rock garden serving as a background.

The grass is cut every Monday and Tuesday with a power mower. Wednesday and Thursday Mr. LaChapelle rakes the cut grass and trims the edges. Another reason for the good condition of the lawn is that this area was a swamp before it was filled in. There is still plenty of moisture to help the grass grow and this makes all the difference in cultivating a soft lawn.

Sets Building Off

As to the stone-studded paths on and surrounding the grounds, Mr. LaChapelle said that these have been built to set off the building in the background. A ditch is also maintained in the middle of the lawn to allow high water to flow out into the canal as well as keeping it off the grass.

Employees are discouraged from walking over the lawn, but nevertheless, during the summer they eat their lunches within full sight of the grass and shrubbery. Mr. LaChapelle has especially erected garbage boxes in the yard for the disposal of paper as well as other refuse. The hardest job he has to tackle is keeping children off the grounds, especially the pathways which make beautiful starting points for bicycle races.

STATE OF NEW YORK
DEPARTMENT OF ENVIRONMENTAL CONSERVATION
DIVISION OF SOLID & HAZARDOUS MATERIALS

NYG 5460363

HAZARDOUS WASTE MANIFEST

P.O. Box 12820, Albany, New York 12212

Please type or print. Do not staple

Hazardous Waste Manifest (7/23/95)

UNIFORM HAZARDOUS WASTE MANIFEST

1. Generator's US EPA ID No.: NYR000172498
Manifest Doc. No.:
2. Page 1 of 1
Information within heavy bold line is not required by Federal law.

A. NYG 5460363

3. Generator's Name and Mailing Address: CHAMPLAIN DEVELOPMENT, LLC. P.O. BOX 531 SUTTON, MA 01590

B. Generator's ID: CHAMPLAIN DEVELOPMENT 50 POOLTNEY STREET, WHITEHALL

4. Generator's Telephone Number: (508 320-2219 ATTN:PETER WARD

C. State Transporter's ID: V-40374 (G)

5. Transporter 1 (Company Name): UNITED INDUSTRIAL SERVICES

6. US EPA ID Number: CTD021816889

D. Transporter's Telephone: (303) 238-6748

7. Transporter 2 (Company Name):

8. US EPA ID Number:

E. State Transporter's ID:

F. Transporter's Telephone: ( )

9. Designated Facility Name and Site Address: NORLITE CORPORATION 628 SOUTH SARATOGA STREET COHOES, NY 12047

10. US EPA ID Number: NYD080469935

G. State Facility ID:

H. Facility Telephone: ( ) 518 235-0401

11. US DOT Description (Including Proper Shipping Name, Hazard Class and ID Number)	12. Containers Number	Type	13. Total Quantity	14. Unit Wt/Vol	I. Waste No.
a. RQ, WASTE FLAMMABLE LIQUID, N.O.S., (TOLUENE), (XYLENE), 3, UN1993, PGII	XX16	DM	02530	B	D001/ NONE NONE
b. STATE REGULATED WASTE, (CLEANING COMPOUND), (WASTE WATER), NONE, NONE	XX7	DM	00385	G	CR04 STATE
c.					EPA STATE
d.					EPA STATE

J. Additional Descriptions for Materials listed above
a. PAINT, OIL, SOLVENTS, WATER TOLUENE, XYLENE
b. WATER, SEDIMENT AND CLEANING COMPOUNDS
c.
d.

K. Handling Codes for Wastes Listed Above
a. B
b. B
c.
d.

15. Special Handling Instructions and Additional Information
01465GLMN2 EMERGENCY RESPONSE GUIDE #128 EMERGENCY PHONE # (203)238-6743
EMERGENCY RESPONSE GUIDE # N/A

16. GENERATOR'S CERTIFICATION: I hereby declare that the contents of this consignment are fully and accurately described above by proper shipping name and are classified, packed, marked and labeled, and are in all respects in proper condition for transport by highway according to applicable international and national government regulations and state laws and regulations.
If I am a large quantity generator, I certify that I have a program in place to reduce the volume and toxicity of waste generated to the degree I have determined to be economically practicable and that I have selected the practicable method of treatment, storage, or disposal currently available to me which minimizes the present and future threat to human health and the environment; OR if I am a small quantity generator, I have made a good faith effort to minimize my waste generation and select the best waste management method that is available to me and that I can afford.

Printed/Typed Name: Signature: Mo. 06 Day 16 Year 05

TRANSPORTER

17. Transporter 1 Acknowledgement of Receipt of Materials
Printed/Typed Name: Dennis Catricala Signature: Mo. 06 Day 16 Year 05

18. Transporter 2 Acknowledgement of Receipt of Materials
Printed/Typed Name: Signature: Mo. Day Year

FACILITY

19. Discrepancy Indication Space

20. Facility Owner or Operator. Certification of receipt of hazardous materials covered by this manifest except as noted in Item 19.
Printed/Typed Name: Signature: Mo. Day Year

In case of emergency or spill immediately call the National Response Center (800) 424-8802 and the NYS Department of Environmental Conservation (518) 457-7362

COPY 4—Generator State—Mailed by Generator

SERVICE TRANSPORT GROUP, INC.

28

58 PYLES LANE, NEW CASTLE, DE 19720 PHONE:(877) 999-9559

127120

WASTE SHIPMENT RECORD

S.T.G. # _____

GENERATOR

1. Material Origin Site	Generator: Name/Address	Generator: Phone #

2. Removal Contractor: Name/Address	Contractor: Phone #
Contact:	

3. Responsible Agency: Name/Address	4. US DOT Class - FRIABLE ASBESTOS ONLY
U.S. EPA Region I One Congress Street, Ste. 1100 Boston, MA 02114-2023	RQ ASBESTOS, 9, NA 2212, PG III

5. Description of Materials Specify Friable or Non-Friable	Containers No. Type	Total Quantity
IF Friable (enter required information)		
IF Non-Friable (check one): ☐ Category I ☐ Category II		

6. Special Handling Instructions: 24-hour emergency spill response no. 800-424-9300

7. Generator Certification:

This is to certify that the above named materials are properly classified, described, packaged, marked and labeled and are in proper condition for transport by highway according to the applicable regulations of the Department of Transportation, US E.P.A., and any other state government agency. I certify that the foregoing is true and correct to the best of my knowledge. If the waste shipment is not as I stated, I accept the RETURN of the COMPLETE LOAD to the generator's service location at the generator's expense.

Printed/Typed Name & Title	Signature	Date

TRANSPORTER

8. Transporter 1 (Acknowledgement of Receipt of Materials) *If blank, Transporter 2 serves as sole transporter.

Company Name & Address		
	Signature: _____ Printed Name: _____ Title:	Telephone No. Date:

9. Transporter 2 (Acknowledgement of Receipt of Materials)

Company Name & Address		
Service Transport Group, Inc. 58 Pyles Lane New Castle, DE 19720	Signature: _____ Printed Name: _____ Title:	Telephone No. 877-999-9559 Date:

DISPOSAL SITE

10. Discrepancy Indication Space:

11. Waste Disposal/Recycling Site Owner or Operator's Certification
(Receipt of above Waste Except as Noted in 10)

Company Name & Address		
BFI Imperial Landfill 11 Boggs Road Imperial, PA 15126 Permit No. 100620	Signature: _____ Printed Name: _____ Title: _____	Telephone No. 724-695-0900 Date

WHITE-Disposal Site • GREEN-S.T.G. • YELLOW-Contractor • PINK-Generator • GOLD - Pick Up Receipt

General Property Description

Prop. Address: 16 POULTNEY ST
Municipality: V. WHITEHALL
Town Swis Code: 535201

Owner: CHAMPLAIN L.L.C.
Tax / Map Acct#: 060.006-0001-005.0000000
School Dist: WHITHALL

Owner 2:
Print Key: 60.6-1-5
School Code: 535201

Owner Mailing: 66 OLD DOUGLAS RD
Deed Book / Page: 1751 / 160

WEBSTER, MA01570
Sub Div: BUILDING RAZED
Phone Number:

Misc:

Structural Characteristics

Bldg Sq Feet: 110793
Built: 1950
Uses As 1:

1st Floor: 0
Story Height: 30
Uses As 2:

2nd Floor: 0
Heat:
No. Of Bldgs:

House Type:
Fireplaces: 0
Residential Units: 0

Bedrooms: 0.0
Fuel:
Exterior:

Bath: 0.0
Water: PUBLIC
Garage: 0

Basement:
Sewer: NONE
Number Stories: 1.0

Basement SF: 0
Utilities: NONE

Improve 1: CANOPY,W/SLAB
Size 1: 6 X 10
Total SqFT 1: 60

Improve 2: TANK,PROPANE
Size 2: Dimensions not available
Total SqFT 2: 1000

Improve 3:
Size 3: 0 X 0
Total SqFT 3: 0

Improve 4:
Size 4: 0 X 0
Total SqFT 4: 0

Land Characteristics

Acreage : 11.80
Land SqFt: 514008

Class Code: 710
Class Name: MANUFACTURING
Lot Size:

East / Longitude: 747400 / -73.400203
North / Latitude 1294450 / 43.548650

Tax / Assessment Data

Tax / Map Acct #: 060.006-0001-005.0000000
School Tax: $203,891.20

Total Assessment: $640,000.00
County Tax: $127,161.60

Land: $54,300.00
City Tax: $186,528.00

Old Assessment: $285,000.00
Account #:

Sales Information

Sales Price:	Sales Date:	Grantor:	Deed Book / Page:	Deed Type:	Deed Valid:	ARMS Length:
$74,250.00	06/16/2004	WASHINGTON COUNTY,	1751 / 160			
$160,000.00	01/28/2003	OLD CHAMPLAIN MILL INC	927 / 329		0	N
$30,000.00	07/24/2001	EB METAL INDUSTIRES INC	885 / 98		0	N

PLEASE TYPE OR PRESS FIRMLY WHEN WRITING ON FORM
INSTRUCTIONS: http:// www.orps.state.ny.us or PHONE (518) 473-7222 11/20/01

FOR COUNTY USE ONLY

C1. SWIS Code 5 3 5 2 0 1

C2. Date Deed Recorded 7 / 24 / 01 (Month / Day / Year)

C3. Book 8 8 5 C4. Page 9 8

REAL PROPERTY TRANSFER REPORT

STATE OF NEW YORK
STATE BOARD OF REAL PROPERTY SERVICES

RP - 5217

RP-5217 Rev. 3/97

PROPERTY INFORMATION

1. Property Location: 16-50 (STREET NUMBER) POULTNEY ST S/S (STREET NAME)
WHITEHALL (CITY OR TOWN) WHITEHALL. (VILLAGE) 12887 (ZIP CODE)

2. Buyer Name: OLD CHAMPLAIN MILL INC (LAST NAME / COMPANY) (FIRST NAME)
(LAST NAME / COMPANY) (FIRST NAME)

3. Tax Billing Address: Indicate where future Tax Bills are to be sent if other than buyer address (at bottom of form) (LAST NAME / COMPANY) (FIRST NAME)
(STREET NUMBER AND STREET NAME) (CITY OR TOWN) (STATE) (ZIP CODE)

4. Indicate the number of Assessment Roll parcels transferred on the deed: 1 # of Parcels OR ☐ Part of a Parcel

(Only if Part of a Parcel) Check as they apply:
4A. Planning Board with Subdivision Authority Exists ☐
4B. Subdivision Approval was Required for Transfer ☐
4C. Parcel Approved for Subdivision with Map Provided ☐

5. Deed Property Size: (FRONT FEET) x (DEPTH) OR 1.49 (ACRES)

6. Seller Name: WASHINGTON COUNTY (LAST NAME / COMPANY) (FIRST NAME)
(LAST NAME / COMPANY) (FIRST NAME)

7. Check the box below which most accurately describes the use of the property at the time of sale:

A ☐ One Family Residential
B ☐ 2 or 3 Family Residential
C ☐ Residential Vacant Land
D ☐ Non-Residential Vacant Land
E ☐ Agricultural
F ☒ Commercial
G ☐ Apartment
H ☐ Entertainment / Amusement
I ☐ Community Service
J ☐ Industrial
K ☐ Public Service
L ☐ Forest

Check the boxes below as they apply:
8. Ownership Type is Condominium ☐
9. New Construction on Vacant Land ☐
10A. Property Located within an Agricultural District ☐
10B. Buyer received a disclosure notice indicating that the property is in an Agricultural District ☐

SALE INFORMATION

11. Sale Contract Date: / / (Month / Day / Year)

12. Date of Sale / Transfer: 07 / 23 / 01 (Month / Day / Year)

13. Full Sale Price: 3,000,000.00

(Full Sale Price is the total amount paid for the property including personal property. This payment may be in the form of cash, other property or goods, or the assumption of mortgages or other obligations.) *Please round to the nearest whole dollar amount.*

14. Indicate the value of personal property included in the sale: .00

15. Check one or more of these conditions as applicable to transfer:

A ☐ Sale Between Relatives or Former Relatives
B ☐ Sale Between Related Companies or Partners in Business
C ☐ One of the Buyers is also a Seller
D ☒ Buyer or Seller is Government Agency or Lending Institution
E ☐ Deed Type not Warranty or Bargain and Sale (Specify Below)
F ☐ Sale of Fractional or Less than Fee Interest (Specify Below)
G ☐ Significant Change in Property Between Taxable Status and Sale Dates
H ☐ Sale of Business is Included in Sale Price
I ☐ Other Unusual Factors Affecting Sale Price (Specify Below)
J ☐ None

ASSESSMENT INFORMATION - Data should reflect the latest Final Assessment Roll and Tax Bill

16. Year of Assessment Roll from which information taken: 01

17. Total Assessed Value (of all parcels in transfer): 640,000

18. Property Class: 710

19. School District Name: WHITEHALL

20. Tax Map Identifier(s) / Roll Identifier(s) (If more than four, attach sheet with additional identifier(s))

535201 60.6-1-5

CERTIFICATION

I certify that all of the items of information entered on this form are true and correct (to the best of my knowledge and belief) and I understand that the making of any willful false statement of material fact herein will subject me to the provisions of the penal law relative to the making and filing of false instruments.

BUYER

BUYER SIGNATURE pres DATE

308 WEST RIVER Road
STREET NUMBER STREET NAME (AFTER SALE)

Ganansvoort NY 12831
CITY OR TOWN STATE ZIP CODE

SELLER

SELLER SIGNATURE 7/23/01 DATE

BUYER'S ATTORNEY

LAST NAME FIRST NAME

AREA CODE TELEPHONE NUMBER

CITY/TOWN ASSESSOR COPY

PLEASE TYPE OR PRESS FIRMLY WHEN WRITING ON FORM

INSTRUCTIONS: http:// www.orps.state.ny.us or PHONE (518) 473-7222

FOR COUNTY USE ONLY

C1. SWIS Code 533800

~~5-3-5-2-0-1~~

C2. Date Deed Recorded 5 / 23 / 01 (Month / Day / Year)

C3. Book 880 C4. Page 308

REAL PROPERTY TRANSFER REPORT

STATE OF NEW YORK

STATE BOARD OF REAL PROPERTY SERVICES

RP - 5217

RP-5217 Rev. 4/97

PROPERTY INFORMATION

1. Property Location: SEE ATTACHED SCHEDULE A (STREET NUMBER / STREET NAME)

CITY OR TOWN / VILLAGE / ZIP CODE

2. Buyer Name: COUNTY OF WASHINGTON (LAST NAME / COMPANY / FIRST NAME)

LAST NAME / COMPANY / FIRST NAME

3. Tax Billing Address: Indicate where future Tax Bills are to be sent if other than buyer address (at bottom of form) (LAST NAME / COMPANY / FIRST NAME)

STREET NUMBER AND STREET NAME / CITY OR TOWN / STATE / ZIP CODE

4. Indicate the number of Assessment Roll parcels transferred on the deed: # of Parcels OR Part of a Parcel

(Only if Part of a Parcel) Check as they apply:

4A. Planning Board with Subdivision Authority Exists

4B. Subdivision Approval was Required for Transfer

4C. Parcel Approved for Subdivision with Map Provided

5. Deed Property Size: FRONT FEET x DEPTH OR ACRES

6. Seller Name: PHYLLIS COOPER, WASHINGTON COUNTY TREASURER (LAST NAME / COMPANY / FIRST NAME)

LAST NAME / COMPANY / FIRST NAME

7. Check the box below which most accurately describes the use of the property at the time of sale:

A One Family Residential
B 2 or 3 Family Residential
C Residential Vacant Land
D Non-Residential Vacant Land
E Agricultural
F Commercial
G Apartment
H Entertainment / Amusement
I Community Service
J Industrial
K Public Service
L Forest

Check the boxes below as they apply:

8. Ownership Type is Condominium
9. New Construction on Vacant Land
10A. Property Located within an Agricultural District
10B. Buyer received a disclosure notice indicating that the property is in an Agricultural District

SALE INFORMATION

11. Sale Contract Date (Month / Day / Year)

12. Date of Sale / Transfer: 05 / 23 / 01 (Month / Day / Year)

13. Full Sale Price: 0.00

(Full Sale Price is the total amount paid for the property including personal property. This payment may be in the form of cash, other property or goods, or the assumption of mortgages or other obligations.) *Please round to the nearest whole dollar amount.*

14. Indicate the value of personal property included in the sale: 0.00

15. Check one or more of these conditions as applicable to transfer:

A Sale Between Relatives or Former Relatives
B Sale Between Related Companies or Partners in Business
C One of the Buyers is also a Seller
D XX Buyer or Seller is Government Agency or Lending Institution
E Deed Type not Warranty or Bargain and Sale (Specify Below)
F Sale of Fractional or Less than Fee Interest (Specify Below)
G Significant Change in Property Between Taxable Status and Sale Dates
H Sale of Business is Included in Sale Price
I Other Unusual Factors Affecting Sale Price (Specify Below)
J None

ASSESSMENT INFORMATION - Data should reflect the latest Final Assessment Roll and Tax Bill

16. Year of Assessment Roll from which information taken

17. Total Assessed Value (of all parcels in transfer)

18. Property Class

19. School District Name

20. Tax Map Identifier(s) / Roll Identifier(s) (If more than four, attach sheet with additional identifier(s))

SEE ATTACHED SCHEDULE A

CERTIFICATION

I certify that all of the items of information entered on this form are true and correct (to the best of my knowledge and belief) and I understand that the making of any willful false statement of material fact herein will subject me to the provisions of the penal law relative to the making and filing of false instruments.

BUYER

BUYER SIGNATURE / DATE: 05/23/01

383 BROADWAY
STREET NUMBER / STREET NAME (AFTER SALE)

FORT EDWARD / N Y / 12828
CITY OR TOWN / STATE / ZIP CODE

SELLER

SELLER SIGNATURE / DATE: 5/23/01

BUYER'S ATTORNEY

VICKES / ROGER
LAST NAME / FIRST NAME

518 / 746-2216
AREA CODE / TELEPHONE NUMBER

CITY/TOWN ASSESSOR COPY

Schedule A

Town of Hartford

INDEX #901

DESCRIPTION–WADE ROY ETAL, 149.-1-6.1, 197 SHINE HILL RD, 280 MULTIPLE RES, RES/TRA/BLDG, ACRES 6.00. (REFERENCE IS MADE TO THE 1998 ASSESSMENT ROLL OF THE TOWN OF HARTFORD, ON LINE 1, PAGE NUMBERED 275.)

TOWN OF WHITEHALL
IN THE
VILLAGE OF WHITEHALL

ORIGINAL INDEX #1546

DESCRIPTION–EB METAL INDUSTIRES INC, 60.6-1-5, 16-50 POULTNEY ST S/S, 710 MANUFACTURE, BLDG/L/RR SP, ACRES 12.00. (REFERENCE IS MADE TO THE 1998 ASSESSMENT ROLL OF THE TOWN OF WHITEHALL, ON LINE 3, PAGE NUMBERED 81.)

(11.49 ACRES ON APPORTIONMENT) APPORTIONED AS FOLLOWS:
CONVEYANCE ONLY ON THIS PARCEL

DESCRIPTION–EB METAL INDUSTIRES INC, 60.6-1-5, 16-50 POULTNEY ST S/S, 710 MANUFACTURE, BLDG/L/RR SP, ACRES 11.49.

TOWN OF WHITEHALL
142 Main Street
Whitehall, New York 12887
Phone: (518) 499-1535 Fax: (518) 499-1546

Supervisor Vernon Scribner
Councilman David Hollister
Town Clerk Janet Jillson

Councilman Bruce Angus
Councilman David Waters
Councilman Stephen Lane

RECEIVED
AUG 07 2006

August 2, 2006

To: C.T. Male Associates
50 Century Hill Drive
P.O. Box 727
Latham, New York 12110-0727

From: Town of Whitehall
142 Main Street
Whitehall, NY 12887

To Whom This May Concern,

Enclosed are some copies of assessment records that you requested on the property of the former EB Metal/Old Champlain Mill Site.

As far as any other requested I believe they would come either thru the village or county.

Sincerely,

Janet Jillson

Janet Jillson, Town Clerk of Whitehall

INSTRUCTIONS: http:// www.orps.state.ny.us or PHONE (518) 473-7222

FOR COUNTY USE ONLY

C1. SWIS Code 5 3 5 2 0 1

C2. Date Deed Recorded 7 / 23 / 04 (Month Day Year)

or C3. Book [illegible] C4. Page [illegible] 1 6 0

Washington County Clerk Hanhan Clerk Hudson, New York

189

REAL PROPERTY TRANSFER REPORT

STATE OF NEW YORK

STATE BOARD OF REAL PROPERTY SERVICES

RP - 5217

RP-5217 Rev. 3/97

PROPERTY INFORMATION

1. Property Location: 16-50 (STREET NUMBER) POULTNEY ST (STREET NAME)
   WHITEHALL (CITY OR TOWN) WHITEHALL (VILLAGE) 12887 (ZIP CODE)

2. Buyer Name: CHAMPLAIN, L.L.C. (LAST NAME / COMPANY) (FIRST NAME)
   (LAST NAME / COMPANY) (FIRST NAME)

3. Tax Billing Address: Indicate where future Tax Bills are to be sent if other than buyer address (at bottom of form) (LAST NAME / COMPANY) (FIRST NAME)
   (STREET NUMBER AND STREET NAME) (CITY OR TOWN) (STATE) (ZIP CODE)

4. Indicate the number of Assessment Roll parcels transferred on the deed: 1 # of Parcels OR ☐ Part of a Parcel

(Only if Part of a Parcel) Check as they apply:
- 4A. Planning Board with Subdivision Authority Exists ☐
- 4B. Subdivision Approval was Required for Transfer ☐
- 4C. Parcel Approved for Subdivision with Map Provided ☐

5. Deed Property Size: (FRONT FEET) X (DEPTH) OR 1 1 . 8 0 (ACRES)

6. Seller Name: WASHINGTON COUNTY (LAST NAME / COMPANY) (FIRST NAME)
   (LAST NAME / COMPANY) (FIRST NAME)

7. Check the box below which most accurately describes the use of the property at the time of sale:

A ☐	One Family Residential	E ☐	Agricultural	I ☐	Community Service
B ☐	2 or 3 Family Residential	F ☐	Commercial	J XX	Industrial
C ☐	Residential Vacant Land	G ☐	Apartment	K ☐	Public Service
D ☐	Non-Residential Vacant Land	H ☐	Entertainment / Amusement	L ☐	Forest

Check the boxes below as they apply:
- 8. Ownership Type is Condominium ☐
- 9. New Construction on Vacant Land ☐
- 10A. Property Located within an Agricultural District ☐
- 10B. Buyer received a disclosure notice indicating that the property is in an Agricultural District ☐

SALE INFORMATION

11. Sale Contract Date: / / (Month Day Year)

12. Date of Sale / Transfer: 06 / 16 / 04 (Month Day Year)

13. Full Sale Price: 7 4 2 5 0 0 0

(Full Sale Price is the total amount paid for the property including personal property. This payment may be in the form of cash, other property or goods, or the assumption of mortgages or other obligations.) *Please round to the nearest whole dollar amount.*

14. Indicate the value of personal property included in the sale: 0 0

15. Check one or more of these conditions as applicable to transfer:
- A ☐ Sale Between Relatives or Former Relatives
- B ☐ Sale Between Related Companies or Partners in Business
- C ☐ One of the Buyers is also a Seller
- D XX Buyer or Seller is Government Agency or Lending Institution
- E ☐ Deed Type not Warranty or Bargain and Sale (Specify Below)
- F ☐ Sale of Fractional or Less than Fee Interest (Specify Below)
- G ☐ Significant Change in Property Between Taxable Status and Sale Dates
- H ☐ Sale of Business is Included in Sale Price
- I ☐ Other Unusual Factors Affecting Sale Price (Specify Below)
- J ☐ None

ASSESSMENT INFORMATION - Data should reflect the latest Final Assessment Roll and Tax Bill

16. Year of Assessment Roll from which information taken: 0 3

17. Total Assessed Value (of all parcels in transfer): 2 8 5 0 0 0

18. Property Class: 7 1 0 -

19. School District Name: WHITEHALL

20. Tax Map Identifier(s) / Roll Identifier(s) (If more than four, attach sheet with additional identifier(s))

535201 60.6-1-5

CERTIFICATION

I certify that all of the items of information entered on this form are true and correct (to the best of my knowledge and belief) and I understand that the making of any willful false statement of material fact herein will subject me to the provisions of the penal law relative to the making and filing of false instruments.

BUYER

BUYER SIGNATURE DATE

STREET NUMBER STREET NAME (AFTER SALE)

CITY OR TOWN STATE ZIP CODE

SELLER

SELLER SIGNATURE DATE 6/16/04

BUYER'S ATTORNEY

LAST NAME FIRST NAME

AREA CODE TELEPHONE NUMBER

CITY/TOWN ASSESSOR COPY

Washington County
Deborah R Beahan
County Clerk
FORT EDWARD, New York

Doc#: 00004557
Bk: 1751 Ps: 160

ument Number: 2004- 00004557 Document Type: Deed
Recorded Date: 07/22/2004

Parties: WASHINGTON COUNTY TREASURER
CHAMPLAIN LLC

Pages Charged: 2
Pages Scanned: 3

Comment:

Recorded By: WASHINGTON COUNTY TREASURER

** Examined and Charged as Follows **

Deed	31.00
Coversheet	10.00
RP5217	50.00
TP584 Affidavit	5.00
Recording Fee:	96.00

Received
County Clerks Office
Jul 22,2004 10:06:04A
Washington County
Deborah R Beahan

	Town	Serial #	Consideration
Tax-Transfer	298.00 WHITEHALL	RS 3021	74,250.00
Basic	0.00		
Additional	0.00		
Special Additional	0.00		
Transfer	298.00		
Tax Fee:	298.00		

** This Page is Part of the Document **

I hereby certify that the within and foregoing was recorded in the Clerk's Office for:

File Information
Document Number: 2004- 00004557
Recorded Date: 07/22/2004 10:06 A
Receipt Number: 7758

Mail Back
WASHINGTON COUNTY TREASURER
383 BROADWAY
BUILDING B
FORT EDWARD NY 12828-

Doc#: 00004557
Bk: 1751 Pg: 161

WCRPTS (12/83)
RPTL Sec. 1020
RPL Sec. 258

BARGAIN & SALE TAX DEED

THIS INDENTURE, made the 16th day of JUNE, Two Thousand and FOUR

BETWEEN PHYLLIS COOPER as the Treasurer of the County of Washington, State of New York, for and on behalf of the said County and in the name of the Board of Supervisors of the County of Washington, party of the first part, and

CHAMPLAIN, L.L.C.
66 OLD DOUGLAS ROAD
WEBSTER, MA 01570, a limited liability company organized under the laws of the State of New York

FOR RECORDING OFFICER'S USE

party of the second part,

WITNESSETH, that the party of the first part, in consideration of SEVENTY-FOUR THOUSAND, TWO-HUNDRED FIFTY----------Dollars ($74,250.00) lawful money of the United States, paid by the party of the second part, does hereby grant and release unto the party of the second part, ITS heirs, successors, and assigns forever,

ALL that certain plot, piece, or parcel of land situated in the TOWN OF WHITEHALL, VILLAGE OF WHITEHALL, County of Washington, State of New York, and being more particularly bounded and described as follows:

INDEX #1416

NAME: EB METAL INDUSTRIES INC

DESCRIPTION: 16-50 POULTNEY ST, 710 MANUFACTURE, ACRES 11.80

TAX MAP NO.: 60.6-1-5

(REFERENCE IS MADE TO THE 2001 ASSESSMENT ROLL OF THE TOWN OF WHITEHALL, ON LINE 3, PAGE NUMBERED 81.) (N/O CHAMPLAIN LLC)

SUBJECT TO ALL LIENS OF RECORD AND MORTGAGES PRIOR TO CONVEYANCE TO WASHINGTON COUNTY BY DEED DATED APRIL 29, 2004; RECORDED MAY 3, 2004.

BEING the same or a portion of the premises described in the 2002 Tax Sale deed recorded in the Washington County Clerk's Office in Liber 1698 at Page 98.

THIS CONVEYANCE is made pursuant to Resolution of the Washington County Board of Supervisors adopted ON THE 19TH DAY OF MARCH, 1999. (RESOLUTION NO. 101)

SUBJECT to all claims of the County, Town, Village, or State for taxes, liens, or other encumbrances.

SUBJECT to all easements or rights of way which were in existence at the time of the levy of the tax, the nonpayment of which resulted in tax sale.

TOGETHER with the appurtenances and all the estate and rights of Washington County in and to said premises.

TO HAVE AND TO HOLD the premises herein granted unto the party of the second part, successors, heirs and assigns forever.

AND the County of Washington covenants that it has not done or suffered anything whereby the said premises have been encumbered in any way whatever, except as aforesaid.

IN WITNESS WHEREOF, The Treasurer of the County of Washington for and on behalf of the said county, and in the name of the Board of Supervisors of the County of Washington of the first part, in pursuance of the authority vested in her by law, hath hereunto set her hand and affixed the seal of her office, the day and year first above written.

Treasurer of the County of Washington

STATE OF NEW YORK ss:

WASHINGTON COUNTY

On this 16th day of JUNE, in the year Two-Thousand and FOUR, before me the undersigned, a Notary Public in and for said state, personally appeared PHYLLIS COOPER, County Treasurer of Washington County, New York, personally known to me or proved to me on the basis of satisfactory evidence to be the individual whose name is subscribed to the within instrument and acknowledged to me that she executed the same in her capacity, and that by her signature on the instrument, the individual, or the person upon behalf of which the individual acted, executed the instrument.

Notary Public

ALBERT B. NOLETTE
Notary Public, State of New York
Residing in Washington County
Commission Expires 10/03/06

BARGAIN AND SALE
TAX DEED

FOR PROPERTY PREVIOUSLY
CONVEYED TO THE COUNTY
FROM TAX SALE
WASHINGTON COUNTY
to
CHAMPLAIN, L.L.C., a limited liability company
organized under the laws of the State of New York

Deed

Dated, JUNE 16, 2004

The land affected by the within instrument
lies in , TOWN OF WHITEHALL,
VILLAGE OF WHITEHALL

RECORD AND RETURN TO

WHITEHALL VILLAGE:
BOARDMAN & POULTNEY STREETS
S.H. NO. 1880

MAP NO. 17
PARCEL NO. 18
WASHINGTON COUNTY DEC 8 3 29 PM '99 SHEET 2 OF 2 SHEETS

WASHINGTON COUNTY NY.
DONALD J. STEWART
CLERK

All that piece or parcel of property hereinafter designated as Parcel No. 18 situate in the Village of Whitehall, the Town of Whitehall, County of Washington, State of New York, as shown on the accompanying map and described as follows:

PARCEL NO. 18

Beginning at a point on the southerly boundary of the existing Whitehall Village: Boardman and Poultney Streets, state highway, said point being 22.7± meters distant southerly measured at right angles from Station 1+628.0± of the hereinafter described survey baseline for the reconstruction of a portion of the Whitehall Village: Boardman and Poultney Streets, S.H. No. 1880: thence through the property of E B Metal and Rubber Industries, Inc. (reputed owner) the following six courses and distances: (1) North 76°-23'-27" East, 25.9± meters to a point 26.164 meters distant southerly measured at right angles from Station 1+653.655 of said baseline; (2) South 18°-25'-24" East, 11.002 meters to a point 37.152 meters distant southerly measured at right angles from Station 1+653.111 of said baseline; (3) North 79°-58'-34" East, 57.101 meters to a point 48.002 meters distant southerly measured at right angles from Station 1+713.538 of said baseline; (4) North 28°-52'-46" West, 8.959 meters to a point 39.268 meters distant southerly measured at right angles from Station 1+711.541 of said baseline; (5) North 85°-47'-03" East, 13.753 meters to a point 42.077 meters distant southerly measured at right angles from Station 1+725.005 of said baseline; and (6) North 66°-55'-09" East, 7.3± meters to a point on the westerly edge of Wood Creek, an existing creek, said point being 41.2± meters distant southerly measured at right angle from Station 1+732.3± of said baseline; thence northerly along the last mentioned westerly edge of said existing creek, as it winds and turns, 27.6± meters to its intersection with on the first mentioned southerly boundary of said existing highway, the last mentioned point being 14.6± meters distant southerly measured at right angles from Station 1+730.5± of said baseline; thence along the last mentioned southerly boundary of said existing state highway the following four directions and distances: (1) westerly, 33.4± meters to a point 15.5± meters distant southerly measured at right angles from Station 1+695.7± of said baseline; (2) southerly, 0.3± meter to a point 15.8± meters distant southerly measured at right angles from Station 1+695.7± of said baseline; (3) southwesterly, 15.5± meters to a point 18.2± meters distant southerly measured at right angle from Station 1+680.4± of said baseline; and (4) westerly, 50.3± meters to the point of beginning, being 2062.3± square meters or 0.20623 hectare more or less.

The above mentioned survey baseline is a portion of the 1997 survey baseline (NAD-'83) for the reconstruction of a portion of the Whitehall Village: Boardman and Poultney Streets, S.H. No. 1880, as shown on a map and plan on file in the office of the State Department of Transportation and described as follows:

Beginning at Station 1+594.969; thence North 68°-44'-26" East to Station 1+708.321; thence North 73°-59'-55" East to Station 1+806.319.

All bearings referred to True North at the 74°-30' Meridian of West Longitude.

"Unauthorized alteration or addition to a survey map bearing a licensed surveyor's seal, is a violation of Section 7209 Subdivision 2 of The New York State Education Law."

STATE OF NEW YORK
BRIAN F. MAGEE
49615
LICENSED LAND SURVEYOR

I hereby certify that the property described and mapped above is necessary for this project and the acquisition thereof is recommended.

Date 10/21 19 98

Mark Silo
Mark Silo, P.E., Regional Design Engineer
for the Regional Director of Transportation
Region No. 1

I hereby certify that this is an accurate description and map, made from an accurate survey, prepared under my direction.

Date OCTOBER 19 19 98

Brian F. Magee
Brian F. Magee, Sr. Land Surveyor
P.L.S. License No. 49615

NEW YORK STATE DEPARTMENT OF TRANSPORTATION
DESCRIPTION AND MAP FOR THE ACQUISITION OF PROPERTY

WHITEHALL VILLAGE:
BOARDMAN AND POULNEY STREETS
S.H. NO. 1880
WASHINGTON COUNTY

Map No. 17
Parcel No. 18

Total Area = 2062.3±m²
or 0.20623± ha.

E B METAL & RUBBER INDUSTRIES, INC.
(Reputed Owner)

Description and map of property which the Commissioner of Transportation deems necessary to be acquired by appropriation in the name of the People of the State of New York in Fee, for purposes connected with the highway system of the State of New York pursuant to Section 30 of the Highway Law and the Eminent Domain Procedure Law

There is excepted from this appropriation all the right, title and interest, if any, of the United States of America in or to said property.

Pursuant to statutes set forth above and the authority delegated to me by official order of the Commissioner of Transportation, the above description and map are hereby officially approved; and said description and the original tracing of this map are hereby officially filed in the office of the Department of Transportation.

Date October 25 19 99

Morris, Director, Real Estate Division

I have compared the foregoing copy of description and map with the original thereof as filed in the office of the Department of Transportation, and I do hereby certify the same to be a true and correct copy of the original and of the whole thereof.

Paul Rasse
Real Estate Division

FSE
F.J.A. 1069.03

EA-3105 (REV. 2/91)

NEW YORK STATE
DIVISION OF EQUALIZATION AND ASSESSMENT

COMMERCIAL PROPERTY RECORD CARD

Champlain LLC

COUNTY-WASHINGTON
TOWN OF WHITEHALL
VILL OF WHITEHALL
535201 60.6-1-5 ~~champlain LLC~~ 330
LO 1
~~EB METAL INDUSTIRES INC~~ ~~710~~
6-50 POULTNEY ST S/S 535201

12.00 ACR

AUDIT CONTROL CODES

ACTIVITY
N = NONE L = LISTED
M = MEASURED ONLY

ENTRY
1 = INTERIOR INSPECTION
2 = INTERIOR REFUSAL
3 = TOTAL REFUSAL
4 = ESTIMATE
5 = NO ENTRY

SOURCE
1 = OWNER 4 = OTHER
2 = RELATIVE 5 = NOAH
3 = TENANT 6 = ASSESSOR DATA

SALES INFORMATION CODES

SALE TYPE
1 = LAND ONLY
2 = BLDG. ONLY
3 = LAND & BLDG.

VALID
0 = INVALID SALE 03) 285K
1 = VALID SALE 04) 54300

NOTES: 05) 54300 06) NC

SWIS/SBL/CO: 535201 60.6-1-5 CARD NO. 1 OF 3

SITE INFORMATION SECTION	SITE NO.	0.1	PROP CLASS	330	USED AS	F.09
NEIGHBORHOOD CODE						1
ZONING CODE						

SEWER	1 NONE	2 PRIVATE	3 COMM/PUBLIC			3
WATER	1 NONE	2 PRIVATE	3 COMM/PUBLIC			3
UTILITIES	1 NONE	2 GAS	3 ELECTRIC	4 GAS & ELECTRIC		3
OVERALL DESIRABILITY	1 POOR	2 FAIR	3 NORMAL	4 GOOD	5 EXCEL	2
OVERALL CONDITION	1 POOR	2 FAIR	3 NORMAL	4 GOOD	5 EXCEL	2
OVERALL EFFECTIVE YEAR BUILT						1950
OVERALL GRADE	A EXCEL	B GOOD	C AVERAGE	D ECONOMY	E MINIMUM	D

LABEL CORRECTION AREA	SWIS	TAX MAP #	OWNER	PROP CLASS	LOC #	LOC	SCR DIS	LOT SIZE

AUDIT CONTROL SECTION

QUALITY CONTROL REVIEWER		DATE	
REJECT CODE		ASSISTANCE CODE	

SIGNATURE BELOW DOES NOT MEAN CONTENTS VERIFIED, ONLY THAT DATA WAS COLLECTED IN YOUR PRESENCE.

SIGNATURE Charles McClure DATE 7/23/99

COLLECTOR	DATE (MMDDYY)	TIME	ACTIVITY	ENTRY	SOURCE
CAA	07,23,99	1:35	L	1	1
		:			

SALES INFORMATION SECTION

DATE (MMDDYY)	SALE PRICE	TYPE	VALID
01-28-03	160,000		
06,16,04	74250.	from Wash Co	

ALTERNATE NAME:

LAND BREAKDOWN SECTION

LAND TYPE	FRONT FEET	DEPTH	ACRES	SC
0.1	295		4.00	
0.4			4.00	
0.7			4.00	

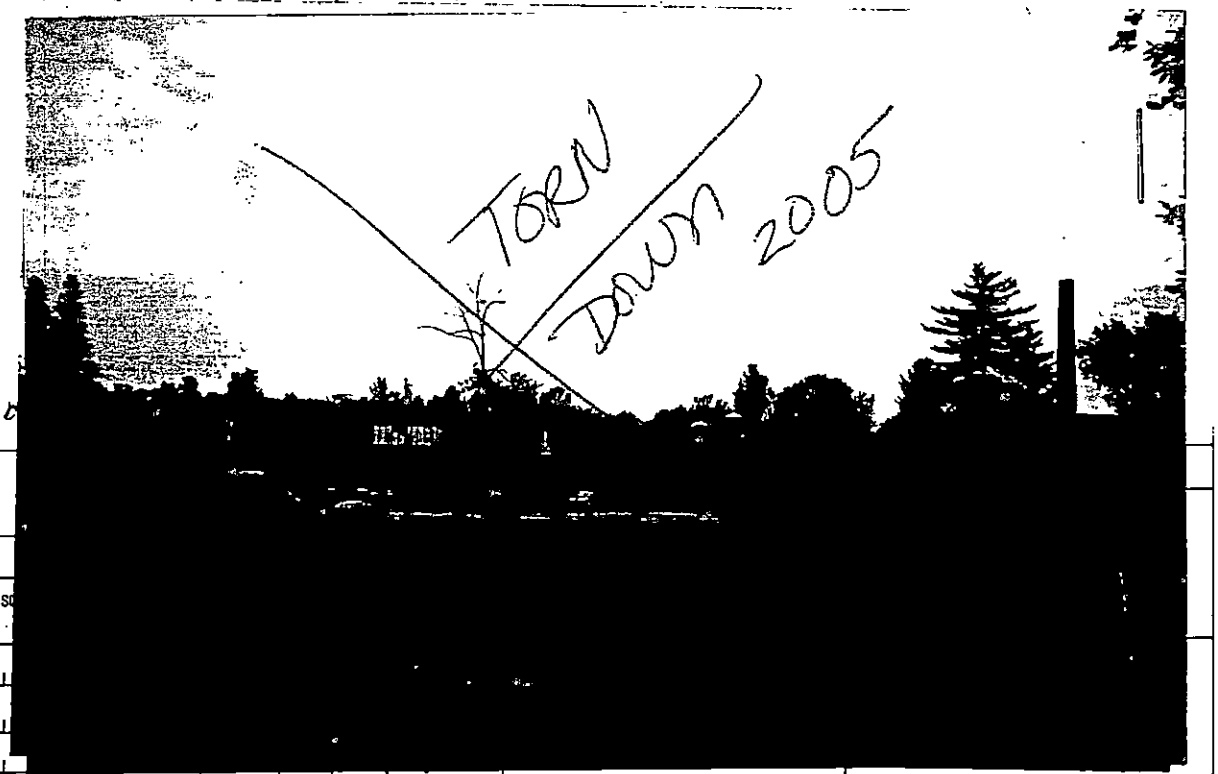

(13) 01 - 10 8 WETNESS 7 OTHER

WATERFRONT TYPE:
1 POND 3 LAKE 5 OCEAN
2 RIVER 4 CANAL 6 BAY

COMMERCIAL BUILDING SECTION

MIS/S8L/CD

MAP #

BUILDING & SECTION	01 1	02
NO. IDENTICAL BLDGS.	001	001
MODEL	0811	0831
EFFECTIVE YEAR BUILT	1950	1950
CONSTRUCTION QUALITY	1.0	2.0
USER ADJUSTMENT		
CONDITION	4	3
PERIMETER	2098	322
GROSS FLOOR AREA	10533 1	5462
NO. STORIES	01	01
STORY HEIGHT	2.0	3.0
WALL A PERCENT		
WALL B PERCENT		
WALL C PERCENT	100	100
AIR COND. PERCENT		
SPRINKLER PERCENT		
ALARM PERCENT		
NO. ELEVATORS		
BASEMENT TYPE		
BASEMENT PERIMETER		
BASEMENT SQ. FT.		

IMPROVEMENT SECTION

STRUC CD	MC	DIMENSION 1	DIMENSION 2	QUANTITY	GR	CD	YEAR BUILT
CP6	2	6	10	1	C	3	1950
TK7	3	10000		3	C	3	1970

COMMERCIAL RENTABLE SECTION

USED AS	SQUARE FEET	UNIT	# UNITS	TOTAL RENT	TYP
F05	5462				
F09	10533 1				

APARTMENT SECTION

	USED AS	SQUARE FEET	# APARTMENTS	TOTAL RENT	TYP
TOTAL	A				

	SQUARE FEET	# APARTMENTS	ANN RENT/UNIT	TYP
E&1B				
2BED				
3BED				

TYPE CODES
1 = ACTUAL
2 = ECONOMIC
3 = ACTUAL & ECONOMIC

UNIT CODES

02 APTS	10 BAYS
03 ROOMS	11 GALLONS
04 SEATS	12 PADS
05 BEDS	13 RUNS
06 STALLS	14 HOLES
07 LANES	15 PLOTS
08 COURTS	16 BARRELS
09 SLIPS	17 ACRES

IMPROVEMENT CODES

MEASURE CODE

1 QUANTITY	3 SQUARE FEET
2 DIMENSIONS	4 DOLLARS

GRADE	CONDITION
A EXCELLENT	1 POOR
B GOOD	2 FAIR
C AVERAGE	3 NORMAL
D ECONOMY	4 GOOD
E MINIMUM	5 EXCELLENT

I & E SUMMARY SECTION

RENT RESTRICTED 1=YES 2=NO	
DOLLAR/PERCENT CODE 1=PERCENT 2=DOLLARS	
POTENTIAL GROSS INCOME	
VACANCY & CREDIT LOSS	
ADDITIONAL INCOME	
EFFECTIVE GROSS INCOME	
TOTAL EXPENSES	
NET OPERATING INCOME	

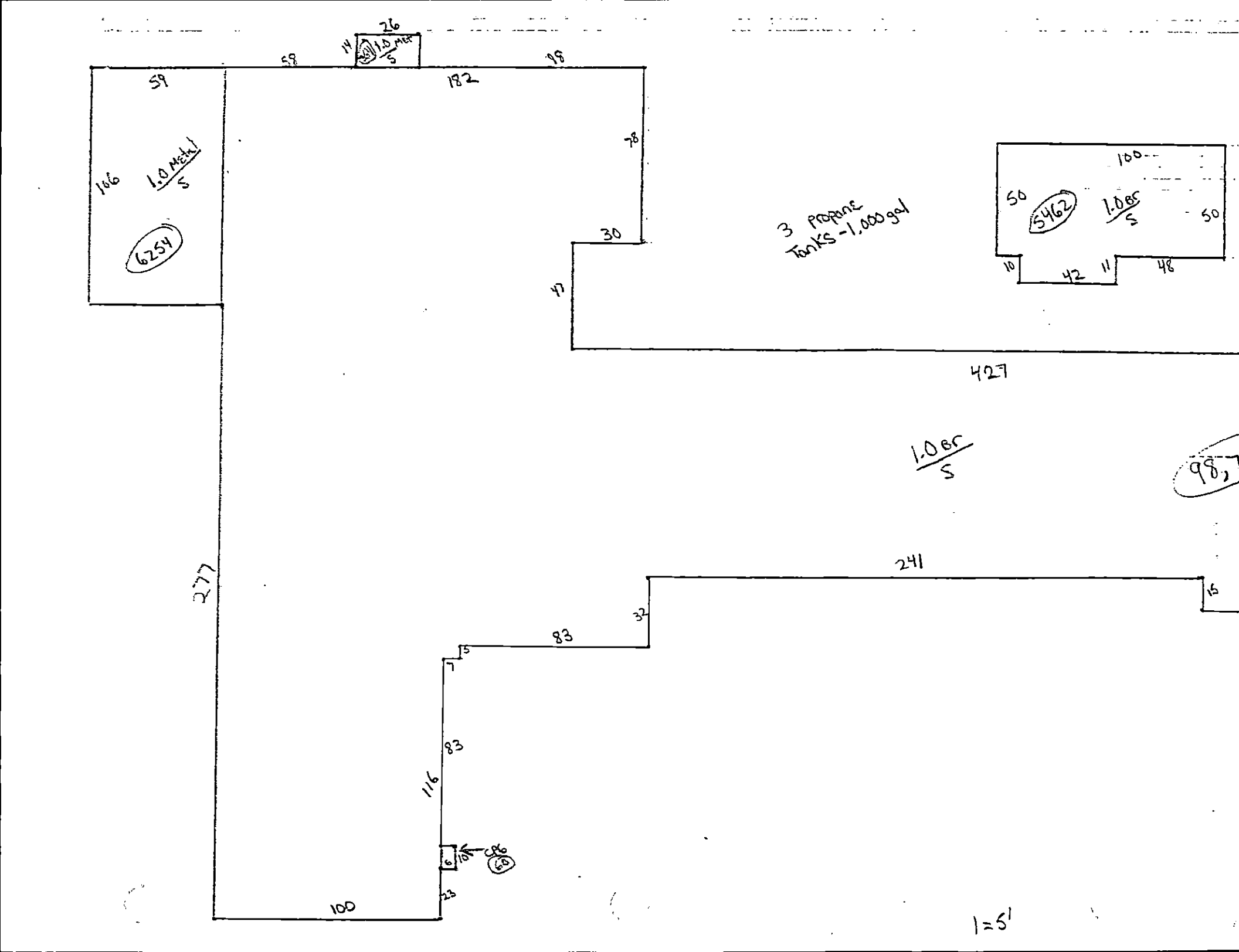

26
14
1.0 Met
S
58
98
59
182
78
106
1.0 Metal
S
6254
30
47
3 propane
Tanks - 1,000 gal
100
50
5462
1.0 Br
S
50
10
42
11
48
427
1.0 Br
S
98,
241
15
32
83
5
7
83
116
6
10
CP6
60
23
100
277
1=5'

5201 60.6-1-5 16-50 POULTNEY ST S/S
EB METAL INDUSTIRES INC Nbhd- 1 Valu Dist 44
MANUFACTURE ** WHITEHALL Assessed- 50,000
Business Name-

** Land Calculation-

Primary	4.00 Acres	28,237
Residual	4.00 Acres	8,000
Woodland	4.00 Acres	0
Total Land Value		36,200

** Improvement Calculation-
3 TANK-PROPANE STORAGE 1,000 Sqft 1970 CONDITION AVE
14,490 RCN -7,970 DEPREC 0 OBSOL 6,521 RCNLD

** Market Use Calculation-		Square Feet	Units
F05 Row Storage		5462 SF	
Base Price	Per Sqft	3.40	
Bldg Size		1.00	
Land Ratio	0.00	1.00	
Sqft/Unit			
Value w/Site Adj		11142	
09 Light Manufacturing		105331 SF	
Base Price	Per Sqft	21.40	
Bldg Size		1.00	
Land Ratio	0.00	1.00	
Sqft/Unit			
Value w/Site Adj		1352450	

** Site Adjustment-
F09 Light Manufacturing

Condition	- Fair	0.75
Desirability	- Normal	1.00
Age	- 1950	1.00
Grade	- Economy	0.80
** Overall Site Adjust-		0.60

********** VALUES **********

Excess Land Value	8,000
Extra Improvement Value	6,500
Sqft Market Value	1,363,600
Total Sqft Market Value	1,378,100

** Sketch

WCRPTS (12/83)
RPTL Sec. 1020
RPL Sec. 258

BARGAIN & SALE TAX DEED

THIS INDENTURE, made the 23RD
day of JULY Two Thousand One
BETWEEN PHYLLIS COOPER
as the Treasurer of the County of Washington,
State of New York, for and on behalf of the said
County and in the name of the Board of
Supervisors of the County of Washington, party
of the first part, and

FOR RECORDING OFFICER'S USE

OLD CHAMPLAIN MILL INC.
308 WEST RIVER ROAD
GANSEVOORT, NEW YORK 12831 party of the second part,

WITNESSETH, that the party of the first part, in consideration of THIRTY THOUSAND---Dollars ($30,000.00.) lawful money of the United States, paid by the party of the second part, does hereby grant and release unto the party of the second part, ITS heirs, successors, and assigns forever,

ALL that certain plot, piece, or parcel of land situated in the Town of WHITEHALL, Village of WHITEHALL
County of Washington, State of New York, and being more particularly bounded and described as follows:

ORIGINAL INDEX #1546
(ITEM #124A)

NAME: EB METAL INDUSTIRES INC
DESCRIPTION: 16-50 POULTNEY ST S/S, 710 MANUFACTURE, BLDG/L/RR SP, ACRES 12.00.
TAX MAP NO.: 60.6-1-5
(REFERENCE IS MADE TO THE 1998 ASSESSMENT ROLL OF THE TOWN OF WHITEHALL, ON LINE 3, PAGE NUMBERED 81.)

(11.49 ACRES ON APPORTIONMENT) APPORTIONED AS FOLLOWS:
CONVEYANCE ONLY THIS PARCEL

NAME: EB METAL INDUSTIRES INC
DESCRIPTION: 16-50 POULTNEY ST S/S, 710 MANUFACTURE, BLDG/L/RR SP, ACRES 11.49
TAX MAP NO.: 60.6-1-5

BEING the same or a portion of the premises described in the 1998 Tax Sale deed recorded in the Washington County Clerk's Office in Liber 880 at Page 310.

THIS CONVEYANCE is made pursuant to Resolution of the Washington County Board of Supervisors adopted ON THE 20th DAY OF JULY, 2001. (RESOLUTION NO.233)

SUBJECT to all claims of the County, Town, Village, or State for taxes, liens, or other encumbrances.

SUBJECT to all easements or rights of way which were in existence at the time of the levy of the tax, the nonpayment of which resulted in tax sale.

TOGETHER with the appurtenances and all the estate and rights of Washington County in and to said premises.

TO HAVE AND TO HOLD the premises herein granted unto the party of the second part, successors, heirs and assigns forever.

AND the County of Washington covenants that it has not done or suffered anything whereby the said premises have been encumbered in any way whatever, except as aforesaid.

IN WITNESS WHEREOF, The Treasurer of the County of Washington for and on behalf of the said county, and in the name of the Board of Supervisors of the County of Washington of the first part, in pursuance of the authority vested in her by law, hath hereunto set her hand and affixed the seal of her office, the day and year first above written.

2001 AUG -2 PM 2:38

Phyllis Cooper

Treasurer of the County of Washington

RECEIVED
$ 120.00
REAL ESTATE
JUL 24 2001
TRANSFER TAX
WASHINGTON
COUNTY
2642

INDEXED & PAGED
JUL 24 8 50 AM '01
LIBER 885 PAGE 98 Deeds
WASHINGTON CO. N.Y.

STATE OF NEW YORK ss:

WASHINGTON COUNTY

On this 23RD day of JULY in the year TWO-THOUSAND ONE, before me the undersigned, a Notary Public in and for said state, personally appeared PHYLLIS COOPER, County Treasurer of Washington County, New York, personally known to me or proved to me on the basis of satisfactory evidence to be the individual whose name is subscribed to the within instrument and acknowledged to me that she executed the same in her capacity, and that by her signature on the instrument, the individual, or the person upon behalf of which the individual acted, executed the instrument.

MICHELE M. HUNTER
Notary Public, State of New York
Residing in Washington County
Commission Expires 12/07/02

Michele M Hunter

Notary Public

BARGAIN AND SALE
TAX DEED

FOR PROPERTY PREVIOUSLY
CONVEYED TO THE COUNTY
FROM TAX SALE

WASHINGTON COUNTY
to
OLD CHAMPLAIN MILL INC.

Deed

Dated, JULY 23, 2001

The land affected by the within instrument
lies in THE TOWN OF WHITEHALL,
VILLAGE OF WHITEHALL

RECORD AND RETURN TO
Washington County
Attorney

26-DC
ms
71
unty

AFFIDAVIT

OF

TITLE

A. B. METAL INDUSTRIES, INC.

destroyed, and said secured party has no interest in the award of the Court of Claims herein.

No one other than said owner has any interest, equity, or lien in or upon said award of the Court of Claims herein.

SEVENTH: Said owner has not transferred, pledged or assigned either all or any part of aforesaid claim herein or of the compensation to be paid therefor by reason of the aforementioned damages to said property, except (state exceptions, if any)

EIGHTH: The allegations herein as they relate to any co-owners and to any ownership in corporate, representative or fiduciary capacity, are upon information and belief.

All statements and representations in this affidavit are made to induce The People of the State of New York to pay to E B Metal Industries, Inc. the money in accordance with Award of the Court of Claims.

Howard Romes

Sworn to before me this 17 day of August, 1989

Irene D B Longtin

Notary Public, State of New York

IRENE D. B. LONGTIN #4779189
NOTARY PUBLIC-STATE of NEW YORK
RESIDING IN WASHINGTON COUNTY
COMMISSION EXPIRES NOVEMBER 30, 19 89

Proceeding 4726-DC
Court of Claims Claim No. 72971
Washington County
Claimant: E. B. Metal Industries, Inc.

AFFIDAVIT OF TITLE

STATE OF NEW YORK)
) SS.:
COUNTY OF Washington)

Howard Shames, being duly sworn, deposes and says:

FIRST: I reside at No. Glens Falls, New York, and I am the Vice President of E. B. METAL INDUSTRIES, INC., a domestic business corporation, which was the owner of a factory building on Route 4 in the Village of Whitehall, County of Washington, State of New York and of machinery, equipment and fixtures within the building which were damaged and of substantial quantities of raw materials and inventory which were destroyed, and which corporation sustained financial losses due to the prolonged interruption of its business on various dates on and after May 29, 1984 as a result of a flood at the Village of Whitehall from May 29 to June 4, 1984, by reason of negligence on the part of certain employees of the State of New York. That said factory building was acquired by said owner at the time and in the manner following, to wit:

By deed dated December 8, 1959 from the Champlain Spinners, Inc. to W. M. P. Realties, Inc. recorded in the Washington County Clerk's Office on December 16, 1959 in Book 374 of Deeds at page 370.

Certificate of Consolidation filed in the New York State Department of State on September 29, 1972, by its terms effective on September 30, 1972, consolidated E B Metal Products Co., Inc., and Whitehall Metal Products, Inc., and Omega Tool & Stamping Co., Inc., and W. M. P. Realties, Inc. forming E B Metal & Rubber Industries, Inc.

By Certificate of Amendment filed in the New York State Department of State on December 20, 1979 the name of E B Metal & Rubber Industries, Inc. was changed to E B Metal Industries, Inc.

SECOND: That said owner filed a claim for the above-mentioned damages by filing a claim (Claim No. 72971) with the Court of Claims and with the Attorney General on the 23rd day of May, 1986. That by Order dated July 8, 1988 the Court of Claims directed entry of judgment in favor of said owner on the issue of liability, and upon Findings of Fact and Conclusions of Law dated August 1, 1989, the Court of Claims ordered entry of judgment for said owner against the State of New York, in the sum of $4,100,000.00, inclusive of interest through the date of its decision, plus interest thereon from the date of its decision, as provided by CPLR 5002 and 5003.

THIRD: That at the time said damages occurred, said property was in the possession of said owner; that such possession was peaceable and undisturbed, and the title thereto was never disputed, questioned or rejected. I know of no facts by reason of which such possession or title might have been called into question or by reason of which any claim to any part of the said property or interest therein adverse to said ownership might have been set up. There are no judgments against such owner unpaid or unsatisfied of record entered in any Court of this State or of the United States. Said property and the claim of said owner by reason of the damages thereof are free and clear of all mortgages, liens, security interests, attachments, judgments, leases, tenancies, easements, licenses, charges, estates, unpaid taxes and assessments, unredeemed or uncancelled tax sales, contracts of sale, actions or proceedings that may affect the same, and of any and all other rights, liens and encumbrances whatsoever, except (state exceptions, if any)

FOURTH: No proceedings have ever been instituted by or against said owner in any Court or before any officer of any State of the United States, nor has an assignment for the benefit of creditors been made at any time by said owner.

FIFTH: I am over the age of eighteen years.

SIXTH: (Additional proof, if any)

That at the time the afore-mentioned damages were sustained to the factory building and machinery, equipment, and fixtures therein said property was unencumbered by any mortgage or lien, as aforesaid, that is now not discharged of record.

That mortgage dated December 21, 1987 made by E. B. Metal Industries, Inc. to New York State Urban Development Corp., recorded in the Washington County Clerk's Office on January 12, 1988 in Book 496 of Mortgages at page 72, was granted long after said damage had been sustained, and said mortgagee has no interest in the award of the Court of Claims herein.

That security interest evidenced by Financing Statement bearing File No. 880059 filed in the Washington County Clerk's Office on January 12, 1988 by New York State Urban Development Corp., Secured Party, against E. B. Metal Industries, Inc., Debtor, was created long after the damages had been sustained to the above mentioned machinery, equipment and fixtures, and said secured party has no interest in the award of the Court of Claims herein.

That security interest evidenced by Financing Statement bearing File No. 882166 filed in the Washington County Clerk's Office on December 5, 1988 by NYS Urban Development Corporation, Secured Party, against E. B. Metal Industries, Inc., Debtor, was created long after the damages had been sustained to the above mentioned machinery, equipment and fixtures, and said secured party has no interest in the award of the Court of Claims herein.

That security interest evidenced by Financing Statement bearing File No. 034625 filed on February 8, 1988 in New York State Department of State by NYS Urban Development Corporation, Secured Party, against E. B. Metal Industries, Inc., Debtor, was

created long after the damages had been sustained to the above mentioned machinery, fixtures, and equipment, and said secured party has no interest in the award of the Court of Claims herein.

That security interest evidenced by Financing Statement bearing File No. 307742 filed on December 6, 1988 in New York State Department of State by NYS Urban Development Corporation, Secured Party, against E. B. Metal Industries, Inc., Debtor, was created long after the damages had been sustained to the above mentioned machinery, fixtures, and equipment, and said secured party has no interest in the award of the Court of Claims herein.

That at the time the above-mentioned damages were sustained said property was unencumbered by any judgment that is now not discharged of record. That judgment in favor of Town of Whitehall vs. E. B. Metals and Rubber Industries, Inc. filed and perfected in Supreme Court of the State of New York, County of Washington on March 19, 1986 in the amount of $2,162.45 was filed and perfected long after said damages had been sustained to the above mentioned factory building, machinery, fixtures, and equipment, and said judgment creditor has no interest in the award of the Court of Claims herein.

That at the time the above-mentioned merchandise and inventory had been destroyed as aforesaid there were no security interests in same owned by others that are now unsatisfied or unpaid. That security interest evidenced by Financing Statement bearing File No. 872349 filed in the Washington County Clerk's Office on December 1, 1987 by Key Bank, N.A., Secured Party, against E B Metal Industries, Inc., Debtor, was created long after said merchandise and inventory had been destroyed, and said secured party has no interest in the award of the Court of Claims herein.

That security interest evidenced by Financing Statement bearing File No. 383071 filed in the New York State Department of State on December 15, 1987 by Key Bank, N.A. , Secured Party, against E B Metal Industries, Inc., Debtor, was created long after the above mentioned merchandise and inventory had been

APPENDIX D

Environmental Database Report

FirstSearch Technology Corporation

Environmental FirstSearch™ Report

TARGET PROPERTY:

16 POULTNEY ST

WHITEHALL NY 12887

Job Number: 06.6448

PREPARED FOR:

C.T. Male Associates, P.C.

50 Century Hill Drive

Latham, NY 12110

07-27-06

Tel: (781) 551-0470 *Fax: (781) 551-0471*

Environmental FirstSearch is a registered trademark of FirstSearch Technology Corporation. All rights reserved.

Environmental FirstSearch
Search Summary Report

Target Site: 16 POULTNEY ST
WHITEHALL NY 12887

FirstSearch Summary

Database	Sel	Updated	Radius	Site	1/8	1/4	1/2	1/2>	ZIP	TOTALS
NPL	Y	06-08-06	1.25	0	0	0	0	0	0	0
CERCLIS	Y	06-08-06	0.75	0	0	0	0	0	0	0
NFRAP	Y	06-08-06	0.50	0	0	0	0	-	0	0
RCRA TSD	Y	04-16-06	1.25	0	0	0	0	0	0	0
RCRA COR	Y	04-16-06	1.25	0	0	0	0	0	0	0
RCRA GEN	Y	04-16-06	0.50	0	3	0	0	-	0	3
RCRA NLR	Y	04-16-06	0.50	0	2	1	1	-	1	5
ERNS	Y	12-31-05	0.50	0	1	0	0	-	0	1
State Sites	Y	06-15-06	1.25	0	1	0	0	0	0	1
Spills-1990	Y	03-01-06	0.50	0	7	5	1	-	0	13
Spills-1980	Y	10-18-00	0.50	0	1	0	0	-	0	1
SWL	Y	05-03-06	0.75	0	0	0	0	0	0	0
REG UST/AST	Y	01-01-02	0.50	0	3	1	0	-	0	4
Leaking UST	Y	03-01-06	0.75	0	2	6	11	0	0	19
- TOTALS -				0	20	13	13	0	1	47

Notice of Disclaimer

Due to the limitations, constraints, inaccuracies and incompleteness of government information and computer mapping data currently available to FirstSearch Technology Corp., certain conventions have been utilized in preparing the locations of all federal, state and local agency sites residing in FirstSearch Technology Corp.'s databases. All EPA NPL and state landfill sites are depicted by a rectangle approximating their location and size. The boundaries of the rectangles represent the eastern and western most longitudes; the northern and southern most latitudes. As such, the mapped areas may exceed the actual areas and do not represent the actual boundaries of these properties. All other sites are depicted by a point representing their approximate address location and make no attempt to represent the actual areas of the associated property. Actual boundaries and locations of individual properties can be found in the files residing at the agency responsible for such information.

Waiver of Liability

Although FirstSearch Technology Corp. uses its best efforts to research the actual location of each site, FirstSearch Technology Corp. does not and can not warrant the accuracy of these sites with regard to exact location and size. All authorized users of FirstSearch Technology Corp.'s services proceeding are signifying an understanding of FirstSearch Technology Corp.'s searching and mapping conventions, and agree to waive any and all liability claims associated with search and map results showing incomplete and or inaccurate site locations.

Environmental FirstSearch
Site Information Report

Request Date:	07-27-06	**Search Type:**	COORD
Requestor Name:	Aimee Gates	**Job Number:**	06.6448
Standard:	ASTM		**Filtered Report**

TARGET ADDRESS: 16 POULTNEY ST
WHITEHALL NY 12887

Demographics

Sites:	47	**Non-Geocoded:**	1	**Population:**	NA

Radon: OF THE 5 HOMES TESTED, THE AVG. PCI/L LEVEL WAS 5.4

Site Location

	Degrees (Decimal)	**Degrees (Min/Sec)**		**UTMs**
Longitude:	-73.399722	-73:23:59	**Easting:**	629273.842
Latitude:	43.548747	43:32:55	**Northing:**	4822783.458
			Zone:	18

Comment

Comment:

Additional Requests/Services

Adjacent ZIP Codes: 0 Mile(s)

ZIP Code	City Name	ST	Dist/Dir	Sel

Services:

	Requested?	Date
Sanborns	No	
Aerial Photographs	No	
Historical Topos	No	
City Directories	No	
Title Search	No	
Municipal Reports	No	
Online Topos	No	

Environmental FirstSearch
Sites Summary Report

TARGET SITE: 16 POULTNEY ST
WHITEHALL NY 12887

JOB: 06.6448

TOTAL: 47 **GEOCODED:** 46 **NON GEOCODED:** 1 **SELECTED:** 9

ID	DB Type	Site Name/ID/Status	Address	Dist/Dir	Page No.	Map ID
1	*RCRAGN*	*CHAMPLAIN LLC* *NYR000132498/LGN*	*50 POULTNEY ST* *WHITEHALL NY 12887*	*0.07 NW*	*1*	*1*
2	*RCRAGN*	*NYSDEC/EB METALS* *NYD001945039/LGN*	*POULTNEY STREET* *WHITEHALL NY 12887*	*0.06 NW*	*3*	*3*
3	RCRAGN	NYSDOT BIN 4001130 NYD987023009/SGN	RTE 4 OVER CHAMPLAIN CANAL WHITEHALL NY 12887	0.12 NW	5	4
4	RCRANLR	NYSDOT BIN 1001120 NYD982790644/NLR	RTE 4 OVER D & H RAILROAD WHITEHALL NY 12887	0.20 NW	7	7
5	RCRANLR	NYSDOT BIN 1001140 NYD982790636/NLR	RTE 4 OVER WOOD CREEK WHITEHALL NY 12887	0.10 NE	9	8
6	RCRANLR	SERVICE STATION NYD013385075/NLR	45 W POULTNEY ST WHITEHALL NY 12887	0.08 NW	11	9
7	RCRANLR	VILLAGE OF WHITEHALL WASTEWATER TR NY0000027581/NLR	RIVERSIDE DR WHITEHALL NY 12887	0.27 SW	13	10
8	*ERNS*	*E.B. METALS IND* *281818/FIXED FACILITY*	*PAULTNEY ST* *WHITEHALL NY 12887*	*0.06 NW*	*15*	*3*
9	STATE	POULTNEY STREET SITE 558019	16/50 POULTNEY STREET WHITEHALL NY 12887	0.05 NW	16	11
10	*SPILLS*	*50 POULTNEY STREET* *0550304/CLOSED*	*50 POULTNEY STREET* *WHITEHALL NY 12887*	*0.07 NW*	*18*	*1*
11	SPILLS	BAY VIEW GARDENS 9908136/CLOSED 10/05/1999	51 POULTNEY ST WHITEHALL NY 12887	0.08 NW	19	12
12	*SPILLS*	*EB METALS* *9205797/CLOSED 08/21/1992*	*POULTNEY ST.* *WHITEHALL NY 12887*	*0.06 NW*	*20*	*3*
13	*SPILLS*	*EB METALS* *9514114/CLOSED 11/14/1996*	*RT. 4* *WHITEHALL NY 12887*	*0.06 NW*	*21*	*3*
14	SPILLS	MARTELL S AUTO 9909321/ACTIVE	45 POULTNEY ST WHITEHALL NY 12887	0.08 NW	22	9
15	SPILLS	MARTELLS SERVICE CTR MOBI 9707351/CLOSED 07/11/2000	POULTNEY ST WHITEHALL NY 12887	0.08 NW	24	9
16	SPILLS	ROUTE 4 BRIDGE 9206439/CLOSED 11/02/1998	NEAR CANAL & RT. 4 BRDG. WHITEHALL NY 12887	0.12 NW	25	4
17	SPILLS	STEWART SHOP #211 0406869/CLOSED	60 POULTNEY STREET WHITE HALL NY 12887	0.14 NE	26	16
18	SPILLS	STEWARTS 0211231/CLOSED	60 POULTNEY ST WHITEHALL NY 12887	0.14 NE	27	16
19	SPILLS	STEWARTS # 211 0409206/CLOSED	60 POULTNEY STREET WHITEHALL NY 12887	0.14 NE	28	16
20	SPILLS	STEWARTS #211 0402441/CLOSED	60 POULTNEY WHITEHALL NY 12887	0.14 NE	29	16
21	SPILLS	STEWARTS SHOP 0208546/CLOSED	60 POULTNEY ST WHITEHALL NY 12887	0.14 NE	30	16

Environmental FirstSearch
Sites Summary Report

TARGET SITE: 16 POULTNEY ST
WHITEHALL NY 12887

JOB: 06.6448

TOTAL: 47 **GEOCODED:** 46 **NON GEOCODED:** 1 **SELECTED:** 9

ID	DB Type	Site Name/ID/Status	Address	Dist/Dir	Page No.	Map ID
22	SPILLS	WASTEWATER PLANT 0409086/CLOSED	25 RIVERSIDE DRIVE WHITEHALL NY 12887	0.27 SW	31	10
23	*SPILLS80*	*EB METALS, INC.* *8903064/CLOSED*	*ROUTE 4* *WHITEHALL NY 12887*	*0.06 NW*	*32*	*3*
24	*UST*	*E B METAL INDUSTRIES, INC.* *PBS5-489220/ADMINISTRATIVELY CLO*	*P.O. BOX 149* *WHITEHALL NY 12887*	*0.06 NW*	*33*	*3*
25	*UST*	*E B METAL INDUSTRIES, INC.* *PBS5-490563/ACTIVE PBS FACILITY*	*POULTNEY STREET* *WHITEHALL NY 12887*	*0.06 NW*	*35*	*3*
26	UST	MARTELLS AUTO SERVICE PBS5-022802/UNREGULATED BY PBS	45 W. POULTNEY STR. WHITEHALL NY 12887	0.08 NW	37	9
27	UST	STEWARTS ICE CREAM CO INC 211 PBS5-227951/ACTIVE PBS FACILITY	60 POULTNEY ST WHITEHALL NY 12887	0.14 NE	40	16
28	LUST	CHAMPLAIN OIL 8605132/CLOSED	ROUTES 22 AND 4 WHITEHALL NY 12887	0.27 SW	43	20
29	LUST	CUMBERLAND FARM STORE 9104086/CLOSED 08/08/2002	916 BROADWAY WHITEHALL NY 12887	0.39 SW	44	5
30	LUST	D&H RAILROAD 9608469/CLOSED 12/11/1996	ROUTE 4 WHITEHALL NY 12887	0.37 SW	45	6
31	LUST	D&H RAILROAD YARD 9608524/CLOSED 11/02/1998	NORTH OF CPC 77 WHITEHALL NY 12887	0.37 SW	46	6
32	LUST	LONGTIN S 9806158/CLOSED 10/09/2002	38 BROADWAY WHITEHALL NY 12887	0.44 NW	47	13
33	LUST	MARTEL S MOBIL 8709177/CLOSED	MAIN STREET WHITEHALL NY 12887	0.08 NW	49	9
34	LUST	MARTEL S MOBIL 9307923/CLOSED 08/28/1998	ROUTE 4 WHITEHALL NY 12887	0.08 NW	50	9
35	LUST	NYS ARMORY 8906193/CLOSED	62 POULTNEY STREET WHITEHALL NY 12887	0.15 NE	51	2
36	LUST	NYS ARMORY 0508105/CLOSED	62 POULKNEY STREET WHITEHALL NY 12887	0.15 NE	52	2
37	LUST	NYS ARMORY 0504886/CLOSED	62 POULTNEY ST. WHITEHALL NY 12887	0.15 NE	53	2
38	LUST	SCRIME RESIDENCE 9306503/CLOSED 08/27/1993	107 SOUT WILLIAMS STREET WHITEHALL NY 12887	0.21 SE	54	14
39	LUST	STEWART S 9100382/CLOSED 05/14/1997	ROUTE 4 WHITEHALL NY 12887	0.19 NE	55	15
40	LUST	STEWARTS#211 0409668/CLOSED	60 POULTNEY STREET WHITEHALL NY 12887	0.14 NE	56	16
41	LUST	TOMS RESIDENCE 0280099/CLOSED	98 BROADWAY WHITEHALL NY 12887	0.35 NW	57	17

Environmental FirstSearch
Sites Summary Report

TARGET SITE: 16 POULTNEY ST
WHITEHALL NY 12887

JOB: 06.6448

TOTAL: 47 **GEOCODED:** 46 **NON GEOCODED:** 1 **SELECTED:** 9

ID	DB Type	Site Name/ID/Status	Address	Dist/Dir	Page No.	Map ID
42	LUST	TOWN OF WHITEHALL 8710530/CLOSED	1 SAUNDERS ST. WHITEHALL NY 12887	0.43 NW	58	21
43	LUST	TROY SAVINGS BANK 9108887/CLOSED 11/14/1991	184 BROADWAY WHITEHALL NY 12887	0.37 SW	59	18
44	LUST	TROY SHIRTMAKERS CO. 9210174/CLOSED 07/16/1998	MOUNTAIN STREET WHITEHALL NY 12887	0.31 NE	60	19
45	LUST	U.S. POSTAL SERVICE 8708620/CLOSED	MAIN STREET WHITEHALL NY 12887	0.37 NW	61	22
46	LUST	WHITEHALL POST OFFICE 8903302/CLOSED	88 BROADWAY WHITEHALL NY 12887	0.37 NW	62	22

Environmental FirstSearch
Sites Summary Report

TARGET SITE: 16 POULTNEY ST
WHITEHALL NY 12887

JOB: 06.6448

TOTAL: 47 **GEOCODED:** 46 **NON GEOCODED:** 1 **SELECTED:** 9

ID	DB Type	Site Name/ID/Status	Address	Dist/Dir	Page No.	Map ID
47	RCRANLR	NYSDEC RTE 4 BARREL SITE NYD982538118/NLR	US RTE 4 WHITEHALL NY 12887	NON GC	63	

Environmental FirstSearch
Site Detail Report

TARGET SITE: 16 POULTNEY ST
WHITEHALL NY 12887

JOB: 06.6448

RCRA GENERATOR SITE

SEARCH ID: 1 **DIST/DIR:** 0.07 NW **MAP ID:** 1

NAME:	CHAMPLAIN LLC	**REV:**	6/6/06
ADDRESS:	50 POULTNEY ST	**ID1:**	NYR000132498
	WHITEHALL NY 12887	**ID2:**	
	WASHINGTON	**STATUS:**	LGN
CONTACT:	PETER L WARD	**PHONE:**	5088657800

SITE INFORMATION

CONTACT INFORMATION: PETER WARD
PO BOX 531
SUTTON MA 01590

PHONE: 5088657800

UNIVERSE INFORMATION:

GOVERNMENT PERFORMANCE AND RESULTS ACT (GPRA)

GPRA PERMIT:	*N - NO*
GPRA POST CLOSURE:	*N - NO*
GPRA CA:	*N - NO*
GPRA COMPLIANCE MONITORING & ENFORCEMENT:	*N - NO*

SUBJECT TO CORRECTIVE ACTION (SUBJCA)

SUBJCA:	N - NO
SUBJCA TSD 3004:	N - NO
SUBJCA NON TSD:	N - NO
SIGNIFICANT NON-COMPLIANCE(SNC):	N - NO
BEGINNING OF THE YEAR SNC:	N - NO
PERMIT WORKLOAD:	-----
CLOSURE WORKLOAD:	-----
POST CLOSURE WORKLOAD:	-----
PERMITTING /CLOSURE/POST-CLOSURE PROGRESS:	-----
CORRECTIVE ACTION WORKLOAD:	N - NO
GENERATOR STATUS:	LQG - LARGE QUANTITY GENERATORS: GENERATES MORE THAN 1000 KG/MONTH OF HAZARDOUS WASTE

SECOND ID:		**OFF SITE RECEIPT:**	
ACCESSIBILITY:		**COUNTY OWNER:**	
FED WSTE GEN OWNER:	HQ	**FED WASTE GEN:**	1
STATE WSTE GEN OWNER:	NY	**STATE WSTE GEN:**	9

NAIC INFORMATION

ENFORCEMENT INFORMATION:

- Continued on next page -

VIOLATION INFORMATION:

Environmental FirstSearch
Site Detail Report

TARGET SITE: 16 POULTNEY ST
WHITEHALL NY 12887

JOB: 06.6448

RCRA GENERATOR SITE

SEARCH ID: 1 **DIST/DIR:** 0.07 NW **MAP ID:** 1

NAME:	CHAMPLAIN LLC	**REV:**	6/6/06
ADDRESS:	50 POULTNEY ST	**ID1:**	NYR000132498
	WHITEHALL NY 12887	**ID2:**	
	WASHINGTON	**STATUS:**	LGN
CONTACT:	PETER L WARD	**PHONE:**	5088657800

HAZARDOUS WASTE INFORMATION:

D002 - Corrosive waste
D001 - Ignitable waste

Environmental FirstSearch
Site Detail Report

TARGET SITE: 16 POULTNEY ST
WHITEHALL NY 12887

JOB: 06.6448

RCRA GENERATOR SITE

SEARCH ID: 2 **DIST/DIR:** 0.06 NW **MAP ID:** 3

NAME:	NYSDEC/EB METALS	**REV:**	6/6/06
ADDRESS:	POULTNEY STREET	**ID1:**	NYD001945039
	WHITEHALL NY 12887	**ID2:**	
	WASHINGTON	**STATUS:**	LGN
CONTACT:	REPORTING SECTION	**PHONE:**	5184028730

SITE INFORMATION

CONTACT INFORMATION: HOWARD SHAMES
POULTNEY ST
WHITEHALL NY 12887

PHONE: 5184991222

UNIVERSE INFORMATION:

GOVERNMENT PERFORMANCE AND RESULTS ACT (GPRA)

GPRA PERMIT:	*N - NO*
GPRA POST CLOSURE:	*N - NO*
GPRA CA:	*N - NO*
GPRA COMPLIANCE MONITORING & ENFORCEMENT:	*N - NO*

SUBJECT TO CORRECTIVE ACTION (SUBJCA)

SUBJCA:	N - NO
SUBJCA TSD 3004:	N - NO
SUBJCA NON TSD:	N - NO
SIGNIFICANT NON-COMPLIANCE(SNC):	N - NO
BEGINNING OF THE YEAR SNC:	N - NO
PERMIT WORKLOAD:	-----
CLOSURE WORKLOAD:	-----
POST CLOSURE WORKLOAD:	-----
PERMITTING /CLOSURE/POST-CLOSURE PROGRESS:	-----
CORRECTIVE ACTION WORKLOAD:	N - NO
GENERATOR STATUS:	LQG - LARGE QUANTITY GENERATORS: GENERATES MORE THAN 1000 KG/MONTH OF HAZARDOUS WASTE

SECOND ID:		**OFF SITE RECEIPT:**	U - UNKNOWN
ACCESSIBILITY:		**COUNTY OWNER:**	
FED WSTE GEN OWNER:	HQ	**FED WASTE GEN:**	1
STATE WSTE GEN OWNER:		**STATE WSTE GEN:**	
SECOND ID:		**OFF SITE RECEIPT:**	U - UNKNOWN
ACCESSIBILITY:		**COUNTY OWNER:**	
FED WSTE GEN OWNER:	HQ	**FED WASTE GEN:**	1
STATE WSTE GEN OWNER:		**STATE WSTE GEN:**	
SECOND ID:		**OFF SITE RECEIPT:**	
ACCESSIBILITY:		**COUNTY OWNER:**	
FED WSTE GEN OWNER:	HQ	**FED WASTE GEN:**	
STATE WSTE GEN OWNER:	NY	**STATE WSTE GEN:**	1

- Continued on next page -

Environmental FirstSearch
Site Detail Report

TARGET SITE: 16 POULTNEY ST
WHITEHALL NY 12887

JOB: 06.6448

RCRA GENERATOR SITE

SEARCH ID: 2 **DIST/DIR:** 0.06 NW **MAP ID:** 3

NAME:	NYSDEC/EB METALS	**REV:**	6/6/06
ADDRESS:	POULTNEY STREET	**ID1:**	NYD001945039
	WHITEHALL NY 12887	**ID2:**	
	WASHINGTON	**STATUS:**	LGN
CONTACT:	REPORTING SECTION	**PHONE:**	5184028730

NAIC INFORMATION

333311 - AUTOMATIC VENDING MACHINE MANUFACTURING
333311 - AUTOMATIC VENDING MACHINE MANUFACTURING
333311 - AUTOMATIC VENDING MACHINE MANUFACTURING
333311 - AUTOMATIC VENDING MACHINE MANUFACTURING

ENFORCEMENT INFORMATION:

VIOLATION INFORMATION:

HAZARDOUS WASTE INFORMATION:

D043 - Vinyl chloride
D001 - Ignitable waste
F001 - The following spent halogenated solvents used in degreasing: Tetrachloroethylene, trichlorethylene, methylene chloride, 1,1,1-trichloroethane, carbon tetrachloride and chlorinated fluorocarbons; all spent solvent mixt
F005 - The following spent non-halogenated solvents: toluene, methyl ethyl ketone, carbon disulfide, isobutanol, pyridine, benzene, 2-ethoxyethanol, and 2-nitropropane; all spent solvent mixtures/blends containing, before us
D000

Environmental FirstSearch
Site Detail Report

TARGET SITE: 16 POULTNEY ST
WHITEHALL NY 12887

JOB: 06.6448

RCRA GENERATOR SITE

SEARCH ID: 3 **DIST/DIR:** 0.12 NW **MAP ID:** 4

NAME: NYSDOT BIN 4001130
ADDRESS: RTE 4 OVER CHAMPLAIN CANAL
WHITEHALL NY 12887
WASHINGTON
CONTACT:

REV: 4/16/06
ID1: NYD987023009
ID2:
STATUS: SGN
PHONE:

SITE INFORMATION

CONTACT INFORMATION: ROBERT CRAVER
84 HOLLAND AVE
ALBANY NY 12208

PHONE: 5184746562

UNIVERSE INFORMATION:

GOVERNMENT PERFORMANCE AND RESULTS ACT (GPRA)

GPRA PERMIT:	*N - NO*
GPRA POST CLOSURE:	*N - NO*
GPRA CA:	*N - NO*
GPRA COMPLIANCE MONITORING & ENFORCEMENT:	*N - NO*

SUBJECT TO CORRECTIVE ACTION (SUBJCA)

SUBJCA:	N - NO
SUBJCA TSD 3004:	N - NO
SUBJCA NON TSD:	N - NO
SIGNIFICANT NON-COMPLIANCE(SNC):	N - NO
BEGINNING OF THE YEAR SNC:	N - NO
PERMIT WORKLOAD:	-----
CLOSURE WORKLOAD:	-----
POST CLOSURE WORKLOAD:	-----
PERMITTING /CLOSURE/POST-CLOSURE PROGRESS:	-----
CORRECTIVE ACTION WORKLOAD:	N - NO
GENERATOR STATUS:	SQG - SMALL QUANTITY GENERATOR: GENERATES 100 - 1000 KG/MONTH OF HAZARDOUS WASTE

SECOND ID:		**OFF SITE RECEIPT:**	U - UNKNOWN
ACCESSIBILITY:		**COUNTY OWNER:**	
FED WSTE GEN OWNER:	HQ	**FED WASTE GEN:**	2
STATE WSTE GEN OWNER:		**STATE WSTE GEN:**	
SECOND ID:		**OFF SITE RECEIPT:**	U - UNKNOWN
ACCESSIBILITY:		**COUNTY OWNER:**	
FED WSTE GEN OWNER:	HQ	**FED WASTE GEN:**	1
STATE WSTE GEN OWNER:		**STATE WSTE GEN:**	

NAIC INFORMATION

- Continued on next page -

Environmental FirstSearch
Site Detail Report

TARGET SITE: 16 POULTNEY ST
WHITEHALL NY 12887

JOB: 06.6448

RCRA GENERATOR SITE

SEARCH ID: 3 **DIST/DIR:** 0.12 NW **MAP ID:** 4

NAME: NYSDOT BIN 4001130
ADDRESS: RTE 4 OVER CHAMPLAIN CANAL
WHITEHALL NY 12887
WASHINGTON
CONTACT:

REV: 4/16/06
ID1: NYD987023009
ID2:
STATUS: SGN
PHONE:

ENFORCEMENT INFORMATION:

VIOLATION INFORMATION:

HAZARDOUS WASTE INFORMATION:

D000
D008 - Lead

Environmental FirstSearch
Site Detail Report

TARGET SITE: 16 POULTNEY ST
WHITEHALL NY 12887

JOB: 06.6448

RCRA NLR SITE

SEARCH ID: 4 **DIST/DIR:** 0.20 NW **MAP ID:** 7

NAME: NYSDOT BIN 1001120
ADDRESS: RTE 4 OVER D & H RAILROAD
WHITEHALL NY 12887
WASHINGTON
CONTACT:

REV: 4/16/06
ID1: NYD982790644
ID2:
STATUS: NLR
PHONE:

SITE INFORMATION

CONTACT INFORMATION: JOSEPH LIBRITZ
RTE 4 OVER D & H RAILROAD
WHITEHALL NY 12887

PHONE: 3157932244

UNIVERSE INFORMATION:

GOVERNMENT PERFORMANCE AND RESULTS ACT (GPRA)

GPRA PERMIT:	*N - NO*
GPRA POST CLOSURE:	*N - NO*
GPRA CA:	*N - NO*
GPRA COMPLIANCE MONITORING & ENFORCEMENT:	*N - NO*

SUBJECT TO CORRECTIVE ACTION (SUBJCA)

SUBJCA:	N - NO
SUBJCA TSD 3004:	N - NO
SUBJCA NON TSD:	N - NO
SIGNIFICANT NON-COMPLIANCE(SNC):	N - NO
BEGINNING OF THE YEAR SNC:	N - NO
PERMIT WORKLOAD:	-----
CLOSURE WORKLOAD:	-----
POST CLOSURE WORKLOAD:	-----
PERMITTING /CLOSURE/POST-CLOSURE PROGRESS:	-----
CORRECTIVE ACTION WORKLOAD:	N - NO
GENERATOR STATUS:	N

SECOND ID:		**OFF SITE RECEIPT:**	U - UNKNOWN
ACCESSIBILITY:		**COUNTY OWNER:**	
FED WSTE GEN OWNER:	HQ	**FED WASTE GEN:**	1
STATE WSTE GEN OWNER:		**STATE WSTE GEN:**	
SECOND ID:		**OFF SITE RECEIPT:**	U - UNKNOWN
ACCESSIBILITY:		**COUNTY OWNER:**	
FED WSTE GEN OWNER:	HQ	**FED WASTE GEN:**	N
STATE WSTE GEN OWNER:	HQ	**STATE WSTE GEN:**	N - NO

NAIC INFORMATION

- Continued on next page -

Environmental FirstSearch
Site Detail Report

TARGET SITE: 16 POULTNEY ST
WHITEHALL NY 12887

JOB: 06.6448

RCRA NLR SITE

SEARCH ID: 4 **DIST/DIR:** 0.20 NW **MAP ID:** 7

NAME: NYSDOT BIN 1001120
ADDRESS: RTE 4 OVER D & H RAILROAD
WHITEHALL NY 12887
WASHINGTON
CONTACT:

REV: 4/16/06
ID1: NYD982790644
ID2:
STATUS: NLR
PHONE:

ENFORCEMENT INFORMATION:

VIOLATION INFORMATION:

HAZARDOUS WASTE INFORMATION:

D000
NONE

Environmental FirstSearch
Site Detail Report

TARGET SITE: 16 POULTNEY ST
WHITEHALL NY 12887

JOB: 06.6448

RCRA NLR SITE

SEARCH ID: 5 **DIST/DIR:** 0.10 NE **MAP ID:** 8

NAME: NYSDOT BIN 1001140
ADDRESS: RTE 4 OVER WOOD CREEK
WHITEHALL NY 12887
WASHINGTON
CONTACT:

REV: 4/16/06
ID1: NYD982790636
ID2:
STATUS: NLR
PHONE:

SITE INFORMATION

CONTACT INFORMATION: JOSEPH LIBRITZ
RTE 4 OVER WOOD CREEK
WHITEHALL NY 12887

PHONE: 3157932244

UNIVERSE INFORMATION:

GOVERNMENT PERFORMANCE AND RESULTS ACT (GPRA)

GPRA PERMIT:	*N - NO*
GPRA POST CLOSURE:	*N - NO*
GPRA CA:	*N - NO*
GPRA COMPLIANCE MONITORING & ENFORCEMENT:	*N - NO*

SUBJECT TO CORRECTIVE ACTION (SUBJCA)

SUBJCA:	N - NO
SUBJCA TSD 3004:	N - NO
SUBJCA NON TSD:	N - NO
SIGNIFICANT NON-COMPLIANCE(SNC):	N - NO
BEGINNING OF THE YEAR SNC:	N - NO
PERMIT WORKLOAD:	-----
CLOSURE WORKLOAD:	-----
POST CLOSURE WORKLOAD:	-----
PERMITTING /CLOSURE/POST-CLOSURE PROGRESS:	-----
CORRECTIVE ACTION WORKLOAD:	N - NO
GENERATOR STATUS:	N

SECOND ID:		**OFF SITE RECEIPT:**	U - UNKNOWN
ACCESSIBILITY:		**COUNTY OWNER:**	
FED WSTE GEN OWNER:	HQ	**FED WASTE GEN:**	1
STATE WSTE GEN OWNER:		**STATE WSTE GEN:**	
SECOND ID:		**OFF SITE RECEIPT:**	U - UNKNOWN
ACCESSIBILITY:		**COUNTY OWNER:**	
FED WSTE GEN OWNER:	HQ	**FED WASTE GEN:**	N
STATE WSTE GEN OWNER:	HQ	**STATE WSTE GEN:**	N - NO

NAIC INFORMATION

- Continued on next page -

Environmental FirstSearch
Site Detail Report

TARGET SITE: 16 POULTNEY ST
WHITEHALL NY 12887

JOB: 06.6448

RCRA NLR SITE

SEARCH ID: 5 **DIST/DIR:** 0.10 NE **MAP ID:** 8

NAME: NYSDOT BIN 1001140
ADDRESS: RTE 4 OVER WOOD CREEK
WHITEHALL NY 12887
WASHINGTON
CONTACT:

REV: 4/16/06
ID1: NYD982790636
ID2:
STATUS: NLR
PHONE:

ENFORCEMENT INFORMATION:

VIOLATION INFORMATION:

HAZARDOUS WASTE INFORMATION:

D000
NONE

TARGET SITE: 16 POULTNEY ST
WHITEHALL NY 12887

JOB: 06.6448

RCRA NLR SITE

SEARCH ID: 6 **DIST/DIR:** 0.08 NW **MAP ID:** 9

NAME: SERVICE STATION
ADDRESS: 45 W POULTNEY ST
WHITEHALL NY 12887
WASHINGTON
CONTACT:

REV: 4/16/06
ID1: NYD013385075
ID2:
STATUS: NLR
PHONE:

SITE INFORMATION

CONTACT INFORMATION: HAROLD MARTELL
45 W POULTNEY ST
WHITEHALL NY 12887

PHONE: 2125551212

UNIVERSE INFORMATION:

GOVERNMENT PERFORMANCE AND RESULTS ACT (GPRA)

GPRA PERMIT:	*N - NO*
GPRA POST CLOSURE:	*N - NO*
GPRA CA:	*N - NO*
GPRA COMPLIANCE MONITORING & ENFORCEMENT:	*N - NO*

SUBJECT TO CORRECTIVE ACTION (SUBJCA)

SUBJCA:	N - NO
SUBJCA TSD 3004:	N - NO
SUBJCA NON TSD:	N - NO
SIGNIFICANT NON-COMPLIANCE(SNC):	N - NO
BEGINNING OF THE YEAR SNC:	N - NO
PERMIT WORKLOAD:	-----
CLOSURE WORKLOAD:	-----
POST CLOSURE WORKLOAD:	-----
PERMITTING /CLOSURE/POST-CLOSURE PROGRESS:	-----
CORRECTIVE ACTION WORKLOAD:	N - NO
GENERATOR STATUS:	N

SECOND ID:		**OFF SITE RECEIPT:**	U - UNKNOWN
ACCESSIBILITY:		**COUNTY OWNER:**	
FED WSTE GEN OWNER:	HQ	**FED WASTE GEN:**	N
STATE WSTE GEN OWNER:	HQ	**STATE WSTE GEN:**	N - NO
SECOND ID:		**OFF SITE RECEIPT:**	U - UNKNOWN
ACCESSIBILITY:		**COUNTY OWNER:**	
FED WSTE GEN OWNER:	HQ	**FED WASTE GEN:**	1
STATE WSTE GEN OWNER:		**STATE WSTE GEN:**	

NAIC INFORMATION

- Continued on next page -

Environmental FirstSearch
Site Detail Report

TARGET SITE: 16 POULTNEY ST
WHITEHALL NY 12887

JOB: 06.6448

RCRA NLR SITE

SEARCH ID: 6 **DIST/DIR:** 0.08 NW **MAP ID:** 9

NAME: SERVICE STATION
ADDRESS: 45 W POULTNEY ST
WHITEHALL NY 12887
WASHINGTON
CONTACT:

REV: 4/16/06
ID1: NYD013385075
ID2:
STATUS: NLR
PHONE:

ENFORCEMENT INFORMATION:

VIOLATION INFORMATION:

HAZARDOUS WASTE INFORMATION:

D001 - Ignitable waste
D000

TARGET SITE: 16 POULTNEY ST
WHITEHALL NY 12887

JOB: 06.6448

RCRA NLR SITE

SEARCH ID: 7 **DIST/DIR:** 0.27 SW **MAP ID:** 10

NAME: VILLAGE OF WHITEHALL WASTEWATER TREAT
ADDRESS: RIVERSIDE DR
WHITEHALL NY 12887
WASHINGTON
CONTACT:

REV: 4/16/06
ID1: NY0000027581
ID2:
STATUS: NLR
PHONE:

SITE INFORMATION

CONTACT INFORMATION: DANIEL GORDON
BOX 207 1 SAUNDERS ST
WHITEHALL NY 128870207

PHONE: 5184992681

UNIVERSE INFORMATION:

GOVERNMENT PERFORMANCE AND RESULTS ACT (GPRA)

GPRA PERMIT:	*N - NO*
GPRA POST CLOSURE:	*N - NO*
GPRA CA:	*N - NO*
GPRA COMPLIANCE MONITORING & ENFORCEMENT:	*N - NO*

SUBJECT TO CORRECTIVE ACTION (SUBJCA)

SUBJCA:	N - NO
SUBJCA TSD 3004:	N - NO
SUBJCA NON TSD:	N - NO
SIGNIFICANT NON-COMPLIANCE(SNC):	N - NO
BEGINNING OF THE YEAR SNC:	N - NO
PERMIT WORKLOAD:	-----
CLOSURE WORKLOAD:	-----
POST CLOSURE WORKLOAD:	-----
PERMITTING /CLOSURE/POST-CLOSURE PROGRESS:	-----
CORRECTIVE ACTION WORKLOAD:	N - NO
GENERATOR STATUS:	N

SECOND ID:		**OFF SITE RECEIPT:**	U - UNKNOWN
ACCESSIBILITY:		**COUNTY OWNER:**	
FED WSTE GEN OWNER:	HQ	**FED WASTE GEN:**	N
STATE WSTE GEN OWNER:	HQ	**STATE WSTE GEN:**	N - NO
SECOND ID:		**OFF SITE RECEIPT:**	U - UNKNOWN
ACCESSIBILITY:		**COUNTY OWNER:**	
FED WSTE GEN OWNER:	HQ	**FED WASTE GEN:**	2
STATE WSTE GEN OWNER:		**STATE WSTE GEN:**	

NAIC INFORMATION

- Continued on next page -

Environmental FirstSearch
Site Detail Report

TARGET SITE: 16 POULTNEY ST
WHITEHALL NY 12887

JOB: 06.6448

RCRA NLR SITE

SEARCH ID: 7 **DIST/DIR:** 0.27 SW **MAP ID:** 10

NAME: VILLAGE OF WHITEHALL WASTEWATER TREAT
ADDRESS: RIVERSIDE DR
WHITEHALL NY 12887
WASHINGTON
CONTACT:

REV: 4/16/06
ID1: NY0000027581
ID2:
STATUS: NLR
PHONE:

ENFORCEMENT INFORMATION:

VIOLATION INFORMATION:

HAZARDOUS WASTE INFORMATION:

D001 - Ignitable waste

Environmental FirstSearch
Site Detail Report

TARGET SITE: 16 POULTNEY ST
WHITEHALL NY 12887

JOB: 06.6448

EMERGENCY RESPONSE NOTIFICATION SITE

SEARCH ID: 8 **DIST/DIR:** 0.06 NW **MAP ID:** 3

NAME: E.B. METALS IND
ADDRESS: PAULTNEY ST
WHITE HALL NY 12887
WASHINGTON
CONTACT:

REV: 8/19/92
ID1: 281818
ID2:
STATUS: FIXED FACILITY
PHONE:

SPILL INFORMATION
DATE OF SPILL: 8/19/1992 **TIME OF SPILL:** 2300

PRODUCT RELEASED (1): CHEMICAL MIXTURE
QUANTITY (1): 150
UNITS (1): GAL

PRODUCT RELEASED (2):
QUANTITY (2):
UNITS (2):

PRODUCT RELEASED (3):
QUANTITY (3):
UNITS (3):

MEDIUM/MEDIA AFFECTED

AIR:	NO	**GROUNDWATER:**	NO
LAND:	YES	**FIXED FACILITY:**	NO
WATER:	YES	**OTHER:**	NO
WATERBODY AFFECTED BY RELEASE:		LAKE CHAMPLAIN	

CAUSE OF RELEASE

DUMPING:	NO	**EQUIPMENT FAILURE:**	NO
NATURAL PHENOMENON:	NO	**OPERATOR ERROR:**	YES
OTHER CAUSE:	NO	**TRANSP. ACCIDENT:**	NO
UNKNOWN:	NO		

ACTIONS TAKEN: NONE
RELEASE DETECTION: STRIPPING TANK CHEMICALS REACTED AND OVERFLOWED INTO A SEWER DRAIN
MISC. NOTES: EMPLOYEES WERE TOLD TO WASH SPILLED CHEMICALS INTO DRAIN WHICH THEY BELIEVE DISCHARGES INTO A CANAL WHICH IN TURN FLOWS INTO LAKE CHAMPLAIN. EMPLOYEE WHO WISHED TO REMAIN ANONYMOUS BELIEVES THAT THE SAFETY MANAGER, MR. RON ROBERTS, IS NOT TAKING PROPER S

DISCHARGER INFORMATION
DISCHARGER ID: 281818
TYPE OF DISCHARGER: PRIVATE ENTERPRISE
NAME OF DISCHARGER: E.B. METALS IND
ADDRESS: POULTNEY ST
WHITE HALL NY 12887

DUN & BRADSTREET #:

Environmental FirstSearch
Site Detail Report

TARGET SITE: 16 POULTNEY ST
WHITEHALL NY 12887

JOB: 06.6448

STATE SITE

SEARCH ID: 9 **DIST/DIR:** 0.05 NW **MAP ID:** 11

NAME: POULTNEY STREET SITE
ADDRESS: 16/50 POULTNEY STREET
WHITEHALL NY 12887
WASHINGTON
CONTACT:

REV: 06/15/06
ID1: 558019
ID2:
STATUS:
PHONE:

SITE INFORMATION

CLASS CODE: 2
SIZE (ACRES): 2
REGION: 5

SITE TYPE:
OPEN DUMP: X
LAGOON:
POND:
STRUCTURE:
LANDFILL:
NPL STATUS:

SITE OWNER/OPERATOR INFORMATION:
CURRENT OWNER(S) NAME: CLARENDON & PITTSFORD RAILROAD CO.
CURRENT OWNER(S) ADDRESS: ONE RAILWAY LANE
BURLINGTON VT 05401

SITE OWNER/OPERATOR INFORMATION:
CURRENT OWNER(S) NAME: NYS DEPARTMENT OF TRANSPORTATION
CURRENT OWNER(S) ADDRESS: STATE CAMPUS - BUILDING 5
ALBANY NY

OPERATOR(S) DURING DISPOSAL: MULTIPLE
OPERATOR(S) ADDRESS:

OPERATOR(S) DURING DISPOSAL: MULTIPLE
OPERATOR(S) ADDRESS:

HAZARDOUS WASTE DISPOSAL PERIOD: unknown TO unknown

SITE DESCRIPTION:
The site is located on the railroad tracks of the Vermont Railroad (Clarendon & Pittsford) located between the State of New York Champlain Canal and Wood Creek. The site consists of an dump area on the western portion of the property and a former fire training area near the center of the property (east of the open dump area). Forty drums of waste material from an unidentified source were discovered in the open dump area. In 1989, these drums were placed in overpack containers, sampled for hazardous waste characteristics and moved to a holding area for proper removal/disposal under an emergency removal action. The results of the characteristics testing revealed that thirty-two of the drums contained materials with a flashpoint less than 70 degrees Fahrenheit. Environmental samples were collected by the NYSDEC in December of 1989. The results revealed that the surface water was contaminated with acetone at 31 ppm, xylene at 12 ppm, toluene at 14 ppm, trichloroethylene at 35,000 ppm and butylbenzylphthalate at 57 ppm. Soil samples also revealed significant contamination. Other surface water samples collected from a pond on the east side of the property contained trichloroethylene at 92 ppm and 1,1,2-trichloroethane at 0.790 ppm, both at levels exceeding applicable surface water standards. Five of the forty drums staged at the site were sampled for full hazardous waste analysis in January 1990 to determine if the drums were the source of the identified contamination. The results revealed that the drums contained acetone at 81,000 ppm, toluene at 310,000 ppm and xylene at 120,000 ppm. The correlation between the drum contents and the identified soil and surface water contamination had been established. The drums of waste were subsequently removed from the site. A remedial investigation (RI) was conducted between December 2001 and April 2002. Based upon the RI results, in comparison to the SCGs and potential public health and environmental exposure routes, certain media and areas of the site require remediation. A feasibility study was completed and a Record of Decision (ROD) was issued in March 2004. Excavation of contaminated soil and offsite disposal is the principal aspect of the remedy. The engineering design of the remedy commenced in May 2004.

– Continued on next page –

Environmental FirstSearch
Site Detail Report

TARGET SITE: 16 POULTNEY ST
WHITEHALL NY 12887

JOB: 06.6448

STATE SITE

SEARCH ID: 9 **DIST/DIR:** 0.05 NW **MAP ID:** 11

NAME: POULTNEY STREET SITE
ADDRESS: 16/50 POULTNEY STREET
WHITEHALL NY 12887
WASHINGTON
CONTACT:

REV: 06/15/06
ID1: 558019
ID2:
STATUS:
PHONE:

CONFIRMED HAZARDOUS WASTE DISPOSAL:	QUANTITY:
Ignitable wastes (D001)	unknown
Trichloroethene (F001)	unknown
Toluene (F005)	unknown
Xylene (F003)	unknown
1,1,2 Trichloroethane (F002)	unknown

ANALYTICAL DATA AVAILABLE FOR

GROUNDWATER:		**SURFACE WATER:**	X
AIR:		**SEDIMENT:**	X
SOIL:	X		

APPLICABLE STANDARDS EXCEEDED FOR

GROUNDWATER:		**SURFACE WATER:**	X
AIR:		**DRINKING WATER:**	

GEOTECHNICAL INFORMATION
SOIL/ROCK TYPE:
DEPTH TO GROUNDWATER:

LEGAL ACTION
TYPE:
STATUS:

REMEDIATION

PROPOSED:		**DESIGN**	
ACTIVE:	X	**COMPLETE**	

ASSESSMENT OF ENVIRONMENTAL PROBLEMS:
The primary contaminants of concern that exceed their SCGs are volatile organic compounds (VOCs). The compound with highest concentration in groundwater is 1,2-dichloroethene (cis) at 160,000 ppb. Dichloroethene is created through the degradation of trichloroethene. 1,2-dichloroethene and trichloroethene were also the two contaminants most frequently detected in groundwater and identified as exceeding the respective SCG. Trichloroethene is also the most frequently detected compound in subsurface soil above SCG. Surface soils are not impacted.

ASSESSMENT OF HEALTH PROBLEMS:
This site is located in an industrial area, and the nearest homes are approximately 400 meters away. Access to the former disposal area is limited due to steep gradients, heavy growth and the Champlain Canal. Exposure to site related contaminants in drinking water is not expected since homes and businesses near the site are connected to public water and there are no known private wells in the immediate area. A soil gas investigation will be conducted as per the January 2004 Record of Decision to evaluate the potential for impacts to air quality.

Environmental FirstSearch
Site Detail Report

TARGET SITE: 16 POULTNEY ST
WHITEHALL NY 12887

JOB: 06.6448

STATE SPILLS SITE

SEARCH ID: 10 **DIST/DIR:** 0.07 NW **MAP ID:** 1

NAME:	50 POULTNEY STREET	**REV:**	3/1/06
ADDRESS:	50 POULTNEY STREET	**ID1:**	0550304
	WHITEHALL NY	**ID2:**	
	WASHINGTON	**STATUS:**	CLOSED
CONTACT:		**PHONE:**	

SITE INFORMATION:

SPILL DATE:	05/18/2005
DATE REPORTED:	05/18/2005
SPILL TIME:	12:00 PM
TIME REPORTED:	12:00 PM
SPILLED MATERIAL:	UNKNOWN HAZARDOUS MATERIAL
SPILLED AMOUNT:	1.0000 GAL.
SPILL CAUSE:	ABANDONED DRUMS
SPILL SOURCE:	COMMERCIAL/INDUSTRIAL
RESOURCE AFFECTED:	SOIL
WATERBODY:	
REGION CLOSED DATE:	11/23/2005

Environmental FirstSearch
Site Detail Report

TARGET SITE: 16 POULTNEY ST
WHITEHALL NY 12887

JOB: 06.6448

STATE SPILLS SITE

SEARCH ID: 11 **DIST/DIR:** 0.08 NW **MAP ID:** 12

NAME: BAY VIEW GARDENS
ADDRESS: 51 POULTNEY ST
WHITEHALL NY
WASHINGTON
CONTACT:

REV: 7/12/05
ID1: 9908136
ID2:
STATUS: CLOSED 10/05/1999
PHONE:

SPILL DATE: 10/05/99
SPILL TIME: 10:00

DATE REPORTED: 10/05/99
TIME REPORTED: 10:13

MATERIAL SPILLED: RAW SEWAGE
MATERIAL CLASS: NON PETROLEUM/NON HAZARDOUS

AMOUNT SPILLED: 0 G
AMOUNT RECOVERED: 0 G

MATERIAL SPILLED: RAW SEWAGE
MATERIAL CLASS: NON PETROLEUM/NON HAZARDOUS

AMOUNT SPILLED: 0 G
AMOUNT RECOVERED: 0 G

CAUSE OF SPILL: EQUIPMENT FAILURE
RESOURCE AFFECTED: SURFACE WATER
WATERBODY AFFECTED: SOUTH BAY
SOURCE OF SPILL: NON-COMMERCIAL/INSTITUTIONAL
REPORTED BY: FEDERAL GOVERNMENT
CALLER REMARKS:
COAST GUARD RECEIVED REPORT THAT SEWER PIPE IS BROKEN AND RAW SEWAGE IS FLOWING INTO SOUTH BAY

REGION: 5 **UST TRUST?** FALSE

SPILL INVESTIGATOR: JE
SPILL CONTACT: BOB GORDON **TELEPHONE:** (518) 499-2089

SPILLER: BAY VIEW GARDENS
ADDRESS: 51 POULTNEY STREET
WHITEHALL ,
SPILLER CONTACT: **TELEPHONE:**

CALLER:
AGENCY:
TELEPHONE:

NOTIFIER:
AGENCY:
TELEPHONE:

LAST DEC UPDATE: 10/06/99
DOES CLEAN UP MEET STANDARDS? FALSE
DEC REMARKS:
RFC: REFERRED TO THE DIVISION OF WATER IN WARRENSBURG.

CLOSE DATE: 10/05/99
PENALTY RECOMMENDED? FALSE

Environmental FirstSearch
Site Detail Report

TARGET SITE: 16 POULTNEY ST
WHITEHALL NY 12887

JOB: 06.6448

STATE SPILLS SITE

SEARCH ID: 12 **DIST/DIR:** 0.06 NW **MAP ID:** 3

NAME: EB METALS
ADDRESS: POULTNEY ST.
WHITEHALL NY
WASHINGTON
CONTACT:

REV: 10/15/05
ID1: 9205797
ID2:
STATUS: CLOSED 08/21/1992
PHONE:

SPILL DATE: 08/19/92
SPILL TIME: 22:00

DATE REPORTED: 08/19/92
TIME REPORTED: 22:24

MATERIAL SPILLED: PARCO (STRIPPING AGENT)
MATERIAL CLASS: NON PETROLEUM/NON HAZARDOUS

AMOUNT SPILLED: 150 G
AMOUNT RECOVERED: 0 G

MATERIAL SPILLED: PARCO (STRIPPING AGENT)
MATERIAL CLASS: NON PETROLEUM/NON HAZARDOUS

AMOUNT SPILLED: 150 G
AMOUNT RECOVERED: 0 G

CAUSE OF SPILL: HOUSEKEEPING
RESOURCE AFFECTED: IN SEWER
WATERBODY AFFECTED: LAKE CHAMPLAIN
SOURCE OF SPILL: COMMERCIAL/INDUSTRIAL
REPORTED BY: FEDERAL GOVERNMENT
CALLER REMARKS:
NYSDEC IS GOING THERE TOMORROW. PAY ATTENTION TO STRIPPING AREA. SOMETIMES CHEMICALS OVERFLOW INTO GRATINGS. NO ONE ELSE NOTIFIED.

REGION: 5

UST TRUST? F

SPILL INVESTIGATOR: TS
SPILL CONTACT:

TELEPHONE:

SPILLER: EB METALS
ADDRESS: POULTNEY STREET
WHITEHALL , NY 12887-
SPILLER CONTACT: RON ROBERTS

TELEPHONE: (518) 499-1222

CALLER:
AGENCY:
TELEPHONE:

NOTIFIER:
AGENCY:
TELEPHONE:

LAST DEC UPDATE: 04/27/00
DOES CLEAN UP MEET STANDARDS? T
DEC REMARKS:

CLOSE DATE: 08/21/92
PENALTY RECOMMENDED? F

Environmental FirstSearch
Site Detail Report

TARGET SITE: 16 POULTNEY ST
WHITEHALL NY 12887

JOB: 06.6448

STATE SPILLS SITE

SEARCH ID: 13 **DIST/DIR:** 0.06 NW **MAP ID:** 3

NAME: EB METALS
ADDRESS: RT. 4
WHITEHALL NY
WASHINGTON
CONTACT:

REV: 10/15/05
ID1: 9514114
ID2:
STATUS: CLOSED 11/14/1996
PHONE:

SPILL DATE: 02/06/96
SPILL TIME: 07:58

DATE REPORTED: 02/06/96
TIME REPORTED: 08:03

MATERIAL SPILLED: OTHER PETROLEUM
MATERIAL CLASS: PETROLEUM

AMOUNT SPILLED: 0 G
AMOUNT RECOVERED: 0 G

MATERIAL SPILLED: OTHER PETROLEUM
MATERIAL CLASS: PETROLEUM

AMOUNT SPILLED: 0 G
AMOUNT RECOVERED: 0 G

CAUSE OF SPILL: DELIBERATE
RESOURCE AFFECTED: ON LAND
WATERBODY AFFECTED:
SOURCE OF SPILL: NON-COMMERCIAL/INSTITUTIONAL
REPORTED BY: DEC
CALLER REMARKS:
POSSIBLE DELIBERATE DUMPING.

REGION: 5 **UST TRUST?** FALSE

SPILL INVESTIGATOR: HO
SPILL CONTACT: HOWARD SHAMES **TELEPHONE:** (518) 499-1222

SPILLER: EB METALS
ADDRESS: RT. 4
WHITEHALL , NY 12887-
SPILLER CONTACT: HOWARD SHAMES **TELEPHONE:** (518) 499-1222

CALLER:
AGENCY:
TELEPHONE:

NOTIFIER:
AGENCY:
TELEPHONE:

LAST DEC UPDATE: 08/08/01
DOES CLEAN UP MEET STANDARDS? TRUE
DEC REMARKS:
NO ISSUE HERE, INSPECTED WITH DAVE MATHIS.

CLOSE DATE: 11/14/96
PENALTY RECOMMENDED? FALSE

Environmental FirstSearch
Site Detail Report

TARGET SITE: 16 POULTNEY ST
WHITEHALL NY 12887

JOB: 06.6448

STATE SPILLS SITE

SEARCH ID: 14 **DIST/DIR:** 0.08 NW **MAP ID:** 9

NAME: MARTELL S AUTO
ADDRESS: 45 POULTNEY ST
WHITEHALL NY
WASHINGTON
CONTACT:

REV: 7/12/05
ID1: 9909321
ID2:
STATUS: ACTIVE
PHONE:

SPILL DATE: 11/01/99
SPILL TIME: 11:00

DATE REPORTED: 11/01/99
TIME REPORTED: 11:11

MATERIAL SPILLED: GASOLINE
MATERIAL CLASS: PETROLEUM

AMOUNT SPILLED: 0 G
AMOUNT RECOVERED: 0 G

MATERIAL SPILLED: GASOLINE
MATERIAL CLASS: PETROLEUM

AMOUNT SPILLED: 0 G
AMOUNT RECOVERED: 0 G

CAUSE OF SPILL: TANK OVERFILL
RESOURCE AFFECTED: ON LAND
WATERBODY AFFECTED:
SOURCE OF SPILL: GASOLINE STATION
REPORTED BY: OTHER
CALLER REMARKS:
UPON EXCAVATION OF OLD TANKS THAT WERE TAKEN OUT OF SERVICE LAST YEAR, SOIL CONTAMINATION WAS DISCOVERED. SOIL WILL BE STOCKPILED FOR CLEANUP.

REGION: 5 **UST TRUST?** TRUE

SPILL INVESTIGATOR: MM
SPILL CONTACT: BOB BECK **TELEPHONE:** (518) 424-7138

SPILLER: MARTELL S AUTO
ADDRESS: 45 POULTNEY ST
WHITEHALL , NY 12887-
SPILLER CONTACT: BOB BECK **TELEPHONE:** (518) 424-7138

CALLER:
AGENCY:
TELEPHONE:

NOTIFIER:
AGENCY:
TELEPHONE:

LAST DEC UPDATE: 08/30/01
DOES CLEAN UP MEET STANDARDS? FALSE

CLOSE DATE: / /
PENALTY RECOMMENDED? FALSE

DEC REMARKS:
11/02/99: AK INSPECTED; FOUND CONSIDERABLE SUBSURFACE AND GROUNDWATER CONTAMINATION. FOUR 4K GASOLINE TANKS IN GOOD SHAPE; ONE 500-GALLON WASTE OIL TANK IN POOR SHAPE WITH SEVERE PITTING AND SEVERAL HOLES. VERY MINIMAL SOIL REMOVAL (APPROXIMATELY 5 CUBIC YARDS). FREE PRODUCT ON GROUNDWATER. ROWAN ENVIRONMENTAL INSTALLED TEMPORARY RECOVERY WELLS. ROWAN TO DO INVESTIGATION. 11/18/99: LETTER SENT REQUESTING PRODUCT RECOVERY OPERATION BEGIN AS SOON AS POSSIBLE AND FOR CONSULTANT TO CONTACT OFFICE REGARDING SITE ASSESSMENT SCHEDULE AND PRODUCT RECOVERY INTERVAL. 02/02/00: LETTER SENT SETTING A DEADLINE FOR INITIATION OF REQUIRED WORK SINCE NO RESPONSE WAS MADE TO 11/18/99 LETTER. 09/07/00: NO FOLLOW-UP DONE. ROBERT DAY, CHITTENDEN BANK (802-747-4216; FAX 802-747-4288) CONTACTED THE WARRENSBURG SPILLS OFFICE FOR A STATUS REPORT. CHITTENDEN BANK IS THE MORTGAGE HOLDER FOR THE SUBJECT PROPERTY. HE WAS FAXED COPIES OF THE TWO LETTERS WRITTEN TO MR. MARTEL ALONG WITH A LIST OF CONTRACTORS. MR. DAY WILL SPEAK WITH MR. MARTEL REGARDING INITIATION OF REMEDIAL REQUIREMENTS. GS WILL FOLLOW UP. 10/04/00: GS SPOKE WITH MR. DAY REGARDING HIS ABILITY TO ASSIST MR. MARTELL. HE SAID MR. MARTELL WANTED TO COMPLETE

- Continued on next page -

Environmental FirstSearch
Site Detail Report

TARGET SITE: 16 POULTNEY ST
WHITEHALL NY 12887

JOB: 06.6448

STATE SPILLS SITE

SEARCH ID: 14 **DIST/DIR:** 0.08 NW **MAP ID:** 9

NAME:	MARTELL S AUTO	**REV:**	7/12/05
ADDRESS:	45 POULTNEY ST	**ID1:**	9909321
	WHITEHALL NY	**ID2:**	
	WASHINGTON	**STATUS:**	ACTIVE
CONTACT:		**PHONE:**	

THE WORK BUT WAS HAVING DIFFICULTY REACHING MR. ROWAN, THE ORIGINAL CONTRACTOR ON THE JOB. LETTER SENT TO MR. MARTELL WITH A LIST OF CONTRACTORS. FILE REFERRED TO THE RAY BROOK OFFICE FOR FOLLOW-UP. 10/10/00: MM REVIEWS SPILL INFORMATION; LETTER SENT TO JIM MARTELL REQUIRING FURTHER GWI WORK BY 10/14/00. 11/03/00: NO RESPONSE FROM MARTEL. VALLEY EQUIPMENT HIRED BY DEC TO PERFORM SITE WORK. BILL TORAN AND MM VISITED SITE. 08/30/01: ISR SENT TO ALBANY.

Environmental FirstSearch
Site Detail Report

TARGET SITE: 16 POULTNEY ST
WHITEHALL NY 12887

JOB: 06.6448

STATE SPILLS SITE

SEARCH ID: 15 **DIST/DIR:** 0.08 NW **MAP ID:** 9

NAME: MARTELLS SERVICE CTR MOBI
ADDRESS: POULTNEY ST
WHITEHALL NY
WASHINGTON
CONTACT:

REV: 10/15/05
ID1: 9707351
ID2:
STATUS: CLOSED 07/11/2000
PHONE:

SPILL DATE: 09/22/97
SPILL TIME: 12:00

DATE REPORTED: 09/22/97
TIME REPORTED: 12:00

MATERIAL SPILLED: UNKNOWN MATERIAL
MATERIAL CLASS: UNKNOWN

AMOUNT SPILLED: 0 G
AMOUNT RECOVERED: 0 G

MATERIAL SPILLED: UNKNOWN MATERIAL
MATERIAL CLASS: UNKNOWN

AMOUNT SPILLED: 0 G
AMOUNT RECOVERED: 0 G

CAUSE OF SPILL: HOUSEKEEPING
RESOURCE AFFECTED: ON LAND
WATERBODY AFFECTED:
SOURCE OF SPILL: COMMERCIAL/INDUSTRIAL
REPORTED BY: CITIZEN
CALLER REMARKS:
SERVICE CENTER COLLECTS JUNK CARS ALLEGEDLY DOES NOT REMOVE OR CONTAIN FLUIDS - CALLER ALSO STATES THAT MARTELL S DELIBERATELY DUMP SPENT SOLVENTS ON GROUND AND IN FLOOR PRDUCTS - AUTOMOBILE FLUIDS AND SOLVENT WASTES

REGION: 5 **UST TRUST?** FALSE

SPILL INVESTIGATOR: AK
SPILL CONTACT: **TELEPHONE:**

SPILLER: MARTELLS SERVICE CTR MOBI
ADDRESS: POULTNEY ST
WHITEHALL , NY
SPILLER CONTACT: JAMES OR HAROLD MARTELL **TELEPHONE:**

CALLER:
AGENCY:
TELEPHONE:

NOTIFIER:
AGENCY:
TELEPHONE:

LAST DEC UPDATE: 07/11/00
DOES CLEAN UP MEET STANDARDS? FALSE
DEC REMARKS:
RFC: NO ACTION TAKEN IN 3 YEARS

CLOSE DATE: 07/11/00
PENALTY RECOMMENDED? FALSE

Environmental FirstSearch
Site Detail Report

TARGET SITE: 16 POULTNEY ST
WHITEHALL NY 12887

JOB: 06.6448

STATE SPILLS SITE

SEARCH ID: 16 **DIST/DIR:** 0.12 NW **MAP ID:** 4

NAME: ROUTE 4 BRIDGE
ADDRESS: NEAR CANAL & RT. 4 BRDG.
WHITEHALL NY
WASHINGTON
CONTACT:

REV: 10/15/05
ID1: 9206439
ID2:
STATUS: CLOSED 11/02/1998
PHONE:

SPILL DATE: 08/01/92
SPILL TIME: 08:00

DATE REPORTED: 08/27/92
TIME REPORTED: 11:00

MATERIAL SPILLED: DIESEL
MATERIAL CLASS: PETROLEUM

AMOUNT SPILLED: 0 G
AMOUNT RECOVERED: 0 G

MATERIAL SPILLED: DIESEL
MATERIAL CLASS: PETROLEUM

AMOUNT SPILLED: 0 G
AMOUNT RECOVERED: 0 G

CAUSE OF SPILL: UNKNOWN
RESOURCE AFFECTED: GROUNDWATER
WATERBODY AFFECTED:
SOURCE OF SPILL: UNKNOWN
REPORTED BY: LOCAL AGENCY
CALLER REMARKS:
FOUND DIESEL CONTAMINATION WHILE DOING TEST BORINGS FOR CONSTRUCTION OF A NEW ROUTE 4 BRIDGE. FOUND SHEEN ON GROUNDWATER IN TEST PIT. JOHN WILL DO SOME MORE EXTENSIVE SAMPLING IN FUTURE AND KEEP ME POSTED.

REGION: 5 **UST TRUST?** FALSE

SPILL INVESTIGATOR: SM
SPILL CONTACT: **TELEPHONE:**

SPILLER: UNK.
ADDRESS:

SPILLER CONTACT: **TELEPHONE:**

CALLER:
AGENCY:
TELEPHONE:

NOTIFIER:
AGENCY:
TELEPHONE:

LAST DEC UPDATE: 11/02/98
DOES CLEAN UP MEET STANDARDS? FALSE
CLOSE DATE: 11/02/98
PENALTY RECOMMENDED? FALSE
DEC REMARKS:
-RM/BJ RFC: INDUSTRIAL AREA/RAILROAD AREA. THE VILLAGE IS ON PUBLIC WATER. INACTIVITY OF FILE FOR FOUR YEARS; THEREFORE, CLOSE - DOES NOT MEET STANDARDS. NO FURTHER ACTION AT THIS TIME.

Environmental FirstSearch
Site Detail Report

TARGET SITE: 16 POULTNEY ST
WHITEHALL NY 12887

JOB: 06.6448

STATE SPILLS SITE

SEARCH ID: 17 **DIST/DIR:** 0.14 NE **MAP ID:** 16

NAME: STEWART SHOP #211
ADDRESS: 60 POULTNEY STREET
WHITE HALL NY
WASHINGTON
CONTACT:

REV: 3/1/06
ID1: 0406869
ID2:
STATUS: CLOSED
PHONE:

SITE INFORMATION:

SPILL DATE: 09/18/2004
DATE REPORTED: 09/21/2004
SPILL TIME: 05:00 PM
TIME REPORTED: 03:59 PM
SPILLED MATERIAL: GASOLINE

SPILLED AMOUNT: 9.0000 GAL.
SPILL CAUSE: TANK OVERFILL
SPILL SOURCE: GASOLINE STATION
RESOURCE AFFECTED: SOIL
WATERBODY:

REGION CLOSED DATE: 09/22/2004

Environmental FirstSearch
Site Detail Report

TARGET SITE: 16 POULTNEY ST
WHITEHALL NY 12887

JOB: 06.6448

STATE SPILLS SITE

SEARCH ID: 18 **DIST/DIR:** 0.14 NE **MAP ID:** 16

NAME:	STEWARTS	**REV:**	3/1/06
ADDRESS:	60 POULTNEY ST	**ID1:**	0211231
	WHITEHALL NY	**ID2:**	
	WASHINGTON	**STATUS:**	CLOSED
CONTACT:		**PHONE:**	

SITE INFORMATION:

SPILL DATE:	02/09/2003
DATE REPORTED:	02/09/2003
SPILL TIME:	06:43 PM
TIME REPORTED:	06:59 PM
SPILLED MATERIAL:	GASOLINE
SPILLED AMOUNT:	25.0000 GAL.
SPILL CAUSE:	UNKNOWN
SPILL SOURCE:	UNKNOWN
RESOURCE AFFECTED:	SOIL
WATERBODY:	
REGION CLOSED DATE:	07/08/2003

Environmental FirstSearch
Site Detail Report

TARGET SITE: 16 POULTNEY ST
WHITEHALL NY 12887

JOB: 06.6448

STATE SPILLS SITE

SEARCH ID: 19 **DIST/DIR:** 0.14 NE **MAP ID:** 16

NAME:	STEWARTS # 211	**REV:**	3/1/06
ADDRESS:	60 POULTNEY STREET	**ID1:**	0409206
	WHITE HALL NY	**ID2:**	
	WASHINGTON	**STATUS:**	CLOSED
CONTACT:		**PHONE:**	

SITE INFORMATION:

SPILL DATE:	11/17/2004
DATE REPORTED:	11/17/2004
SPILL TIME:	11:30 AM
TIME REPORTED:	12:16 PM
SPILLED MATERIAL:	
SPILLED AMOUNT:	
SPILL CAUSE:	OTHER
SPILL SOURCE:	GASOLINE STATION
RESOURCE AFFECTED:	NOT SPECIFIED
WATERBODY:	
REGION CLOSED DATE:	09/30/2005

Environmental FirstSearch
Site Detail Report

TARGET SITE: 16 POULTNEY ST
WHITEHALL NY 12887

JOB: 06.6448

STATE SPILLS SITE

SEARCH ID: 20 **DIST/DIR:** 0.14 NE **MAP ID:** 16

NAME:	STEWARTS #211	**REV:**	3/1/06
ADDRESS:	60 POULTNEY	**ID1:**	0402441
	WHITEHALL NY	**ID2:**	
	WASHINGTON	**STATUS:**	CLOSED
CONTACT:		**PHONE:**	

SITE INFORMATION:

SPILL DATE:	06/04/2004
DATE REPORTED:	06/04/2004
SPILL TIME:	10:50 PM
TIME REPORTED:	11:06 PM
SPILLED MATERIAL:	GASOLINE
SPILLED AMOUNT:	5.0000 GAL.
SPILL CAUSE:	EQUIPMENT FAILURE
SPILL SOURCE:	COMMERCIAL/INDUSTRIAL
RESOURCE AFFECTED:	SOIL
WATERBODY:	
REGION CLOSED DATE:	07/28/2004

Environmental FirstSearch
Site Detail Report

TARGET SITE: 16 POULTNEY ST
WHITEHALL NY 12887

JOB: 06.6448

STATE SPILLS SITE

SEARCH ID: 21 **DIST/DIR:** 0.14 NE **MAP ID:** 16

NAME:	STEWARTS SHOP	**REV:**	3/1/06
ADDRESS:	60 POULTNEY ST	**ID1:**	0208546
	WHITEHALL NY	**ID2:**	
	WASHINGTON	**STATUS:**	CLOSED
CONTACT:		**PHONE:**	

SITE INFORMATION:

SPILL DATE:	11/18/2002
DATE REPORTED:	11/18/2002
SPILL TIME:	10:30 AM
TIME REPORTED:	11:00 AM
SPILLED MATERIAL:	UNKNOWN PETROLEUM
SPILLED AMOUNT:	0.0000 GAL.
SPILL CAUSE:	UNKNOWN
SPILL SOURCE:	GASOLINE STATION
RESOURCE AFFECTED:	SOIL
WATERBODY:	
REGION CLOSED DATE:	01/07/2003

Environmental FirstSearch
Site Detail Report

TARGET SITE: 16 POULTNEY ST
WHITEHALL NY 12887

JOB: 06.6448

STATE SPILLS SITE

SEARCH ID: 22 **DIST/DIR:** 0.27 SW **MAP ID:** 10

NAME:	WASTEWATER PLANT	**REV:**	3/1/06
ADDRESS:	25 RIVERSIDE DRIVE	**ID1:**	0409086
	WHITEHALL NY	**ID2:**	
	WASHINGTON	**STATUS:**	CLOSED
CONTACT:		**PHONE:**	

SITE INFORMATION:

SPILL DATE:	11/10/2004
DATE REPORTED:	11/10/2004
SPILL TIME:	12:00 PM
TIME REPORTED:	12:20 PM
SPILLED MATERIAL:	
SPILLED AMOUNT:	
SPILL CAUSE:	UNKNOWN
SPILL SOURCE:	INSTITUTIONAL, EDUCATIONAL, GOV., OTHER
RESOURCE AFFECTED:	NOT SPECIFIED
WATERBODY:	
REGION CLOSED DATE:	01/21/2005

Environmental FirstSearch
Site Detail Report

TARGET SITE: 16 POULTNEY ST
WHITEHALL NY 12887

JOB: 06.6448

STATE SPILLS 80's SITE

SEARCH ID: 23 **DIST/DIR:** 0.06 NW **MAP ID:** 3

NAME: EB METALS, INC.
ADDRESS: ROUTE 4
WHITEHALL NY
WASHINGTON
CONTACT:

REV: 10/18/00
ID1: 8903064
ID2:
STATUS: CLOSED
PHONE:

SPILL DATE: 06/21/89
SPILL TIME: 12:00

DATE REPORTED: 06/22/89
TIME REPORTED: 12:00

MATERIAL SPILLED: WASTE OIL
MATERIAL CLASS: PETROLEUM

AMOUNT SPILLED: UNK G
AMOUNT RECOVERED: UNK G

CAUSE OF SPILL: HOUSEKEEPING
RESOURCE AFFECTED: ON LAND
WATERBODY AFFECTED:
SOURCE OF SPILL: COMMERCIAL/INDUSTRIAL
REPORTED BY: DEC
CALLER REMARKS:
SL CONTACTED BY STEVE WOOD, BECI. (1) LANDFILL AREA CONTAINS 20-30 DRUMS-SOME LEAKING. (2) OILY PIT-PIPING LEADING TO PIT AREA. (3) TAR PIT. PROJECT BEING HANDLED BY BECI.

REGION: 5 **UST TRUST?** NO

SPILL INVESTIGATOR: SL
SPILL CONTACT: **TELEPHONE:**

SPILLER: EB METALS, INC.
ADDRESS: ROUTE 4
WHITEHALL, NY
SPILLER CONTACT: EVELYN FREEDMAN **TELEPHONE:**

CALLER: LT. STEVE WOOD
AGENCY: BECI
TELEPHONE: (518) 457-7102

NOTIFIER:
AGENCY:
TELEPHONE:

LAST DEC UPDATE: 09/09/98
DOES CLEAN UP MEET STANDARDS? YES

CLOSE DATE: 05/10/91
PENALTY RECOMMENDED? NO

DEC REMARKS:
05/10/91: AS PER CONVERSATION WITH JIM MCCLAIN, PROJECT TURNED OVER TO DHWR.

TARGET SITE: 16 POULTNEY ST
WHITEHALL NY 12887

JOB: 06.6448

REGISTERED UNDERGROUND STORAGE TANKS

SEARCH ID: 24 **DIST/DIR:** 0.06 NW **MAP ID:** 3

NAME: E B METAL INDUSTRIES, INC.
ADDRESS: P.O. BOX 149
WHITEHALL NY 12887
WASHINGTON
CONTACT: E B METAL INDUSTRIES, INC.

REV: 1/1/02
ID1: PBS5-489220
ID2:
STATUS: ADMINISTRATIVELY CLOSED
PHONE: (518) 499-1222

PETROLEUM BULK STORAGE FACILITY INFORMATION
TYPE OF SITE:
TOTAL ACTIVE TANKS ON SITE: 0
TOTAL FACILITY CAPACITY: 0 GALLONS
OLD PBS NUMBER: **CBS NUMBER:** **SPDES NUMBER:**
ADDITIONAL ADDRESS INFO:

TYPE OF OWNER:
OWNER SUB TYPE:
OWNER ADDRESS: P.O. BOX 149
WHITEHALL NY 12887
PHONE: (518) 499-1222

EMERGENCY CONTACT: E B METAL INDUSTRIES, INC.
PHONE: (518) 499-1222

MAILING NAME: E B METAL INDUSTRIES, INC.
ADDRESS: P.O. BOX 149
WHITEHALL NY 12887
ATTENTION:
PHONE: (518) 499-1222

CERTIFICATE DATE: 4/15/92 **EXP. DATE:** 6/22/94
RENEWAL DATE: 11/1/93

TANK INFORMATION

TANK NUMBER: 001 **TANK STATUS:** CLOSED PRIOR TO 04/91 (IT IS EITHER IN PLACE OR REMOVED)
INSTALLED: 1/1/66 **CLOSED:**
TANK CAPACITY: 10000 GALLONS
PRODUCT: # 1, 2, OR 4 FUEL OIL

TANK TYPE: STEEL/CARBON STEEL
TANK LOCATION: ABOVEGROUND ON SADDLES, LEGS, STILTS, RACK, OR CRADLE
INTERNAL PROTECTION:
EXTERNAL PROTECTION:
PIPE TYPE: STEEL/IRON
PIPE LOCATION:
INTERNAL PROTECTION:
EXTERNAL PROTECTION:
SECONDARY CONTAINMENT:
LEAK DETECTION: OTHER
OVERFILL PROTECTION:
DISPENSER: SUCTION
DATE TESTED:
NEXT TEST:
TEST METHOD:

- Continued on next page -

Environmental FirstSearch
Site Detail Report

TARGET SITE: 16 POULTNEY ST
WHITEHALL NY 12887

JOB: 06.6448

REGISTERED UNDERGROUND STORAGE TANKS

SEARCH ID: 24 **DIST/DIR:** 0.06 NW **MAP ID:** 3

NAME:	E B METAL INDUSTRIES, INC.	**REV:**	1/1/02
ADDRESS:	P.O. BOX 149	**ID1:**	PBS5-489220
	WHITEHALL NY 12887	**ID2:**	
	WASHINGTON	**STATUS:**	ADMINISTRATIVELY CLOSED
CONTACT:	E B METAL INDUSTRIES, INC.	**PHONE:**	(518) 499-1222

TANK NUMBER:	002	**TANK STATUS:**	ADMINISTRATIVELY CLOSED
INSTALLED:	12/1/90	**CLOSED:**	6/1/94
TANK CAPACITY:	4000 GALLONS		
PRODUCT:	# 1, 2, OR 4 FUEL OIL		
TANK TYPE:	STEEL/CARBON STEEL		
TANK LOCATION:	ABOVEGROUND ON SADDLES, LEGS, STILTS, RACK, OR CRADLE		
INTERNAL PROTECTION:			
EXTERNAL PROTECTION:			
PIPE TYPE:	STEEL/IRON		
PIPE LOCATION:			
INTERNAL PROTECTION:			
EXTERNAL PROTECTION:			
SECONDARY CONTAINMENT:	OTHER		
LEAK DETECTION:	OTHER		
OVERFILL PROTECTION:			
DISPENSER:	SUCTION		
DATE TESTED:			
NEXT TEST:			
TEST METHOD:			

TARGET SITE: 16 POULTNEY ST
WHITEHALL NY 12887

JOB: 06.6448

REGISTERED UNDERGROUND STORAGE TANKS

SEARCH ID: 25 **DIST/DIR:** 0.06 NW **MAP ID:** 3

NAME: E B METAL INDUSTRIES, INC.
ADDRESS: POULTNEY STREET
WHITEHALL NY 12887
WASHINGTON
CONTACT: E B METAL INDUSTRIES, INC.

REV: 1/1/02
ID1: PBS5-490563
ID2:
STATUS: ACTIVE PBS FACILITY
PHONE: (518) 499-1222

PETROLEUM BULK STORAGE FACILITY INFORMATION

TYPE OF SITE: MANUFACTURING
TOTAL ACTIVE TANKS ON SITE: 1
TOTAL FACILITY CAPACITY: 4000 GALLONS
OLD PBS NUMBER: **CBS NUMBER:** **SPDES NUMBER:**
ADDITIONAL ADDRESS INFO:

TYPE OF OWNER: CORPORATE/COMMERCIAL
OWNER SUB TYPE:
OWNER ADDRESS: P.O. BOX 149
WHITEHALL NY 12887
PHONE: (518) 499-1222

EMERGENCY CONTACT: RONALD D. ROBERTS
PHONE: (802) 265-2105

MAILING NAME: E B METAL INDUSTRIES, INC.
ADDRESS: P.O. BOX 149
WHITEHALL NY 12887
ATTENTION: MR. RONALD D. ROBERTS
PHONE: (518) 499-1222

CERTIFICATE DATE: 4/27/99 **EXP. DATE:** 5/25/04
RENEWAL DATE: 7/20/94

TANK INFORMATION

TANK NUMBER: 001 **TANK STATUS:** CLOSED - REMOVED
INSTALLED: 1/1/66 **CLOSED:**
TANK CAPACITY: 10000 GALLONS
PRODUCT: # 1, 2, OR 4 FUEL OIL

TANK TYPE: STEEL/CARBON STEEL
TANK LOCATION: ABOVEGROUND ON SADDLES, LEGS, STILTS, RACK, OR CRADLE
INTERNAL PROTECTION: NONE
EXTERNAL PROTECTION: NONE
PIPE TYPE: NONE
PIPE LOCATION: NONE
INTERNAL PROTECTION: NONE
EXTERNAL PROTECTION: NONE
SECONDARY CONTAINMENT: NONE
LEAK DETECTION: OTHER
OVERFILL PROTECTION: NONE
DISPENSER: SUCTION
DATE TESTED:
NEXT TEST:
TEST METHOD:

- Continued on next page -

TANK NUMBER: 002 **TANK STATUS:** IN SERVICE

Environmental FirstSearch
Site Detail Report

TARGET SITE: 16 POULTNEY ST
WHITEHALL NY 12887

JOB: 06.6448

REGISTERED UNDERGROUND STORAGE TANKS

SEARCH ID: 25 **DIST/DIR:** 0.06 NW **MAP ID:** 3

NAME:	E B METAL INDUSTRIES, INC.	**REV:**	1/1/02
ADDRESS:	POULTNEY STREET	**ID1:**	PBS5-490563
	WHITEHALL NY 12887	**ID2:**	
	WASHINGTON	**STATUS:**	ACTIVE PBS FACILITY
CONTACT:	E B METAL INDUSTRIES, INC.	**PHONE:**	(518) 499-1222

INSTALLED:	12/1/90	**CLOSED:**	
TANK CAPACITY:	4000 GALLONS		
PRODUCT:	# 1, 2, OR 4 FUEL OIL		
TANK TYPE:	STEEL/CARBON STEEL		
TANK LOCATION:	ABOVEGROUND ON SADDLES, LEGS, STILTS, RACK, OR CRADLE		
INTERNAL PROTECTION:	NONE		
EXTERNAL PROTECTION:	PAINTED/ASPHALT COATING, WRAPPED (PIPING)		
PIPE TYPE:	STEEL/IRON		
PIPE LOCATION:	ABOVE GROUND		
INTERNAL PROTECTION:	NONE		
EXTERNAL PROTECTION:	PAINTED/ASPHALT COATING		
SECONDARY CONTAINMENT:	PREFABRICATED STEEL DIKE		
LEAK DETECTION:	OTHER		
OVERFILL PROTECTION:	PRODUCT LEVEL GAUGE, VENT WHISTLE		
DISPENSER:	SUCTION		
DATE TESTED:			
NEXT TEST:			
TEST METHOD:			

TARGET SITE: 16 POULTNEY ST
WHITEHALL NY 12887

JOB: 06.6448

REGISTERED UNDERGROUND STORAGE TANKS

SEARCH ID: 26 **DIST/DIR:** 0.08 NW **MAP ID:** 9

NAME:	MARTELLS AUTO SERVICE	**REV:**	1/1/02
ADDRESS:	45 W. POULTNEY STR.	**ID1:**	PBS5-022802
	WHITEHALL NY 12887	**ID2:**	
	WASHINGTON	**STATUS:**	UNREGULATED BY PBS
CONTACT:	JAMES H. MARTELL	**PHONE:**	(518) 499-0575

PETROLEUM BULK STORAGE FACILITY INFORMATION

TYPE OF SITE: RETAIL GASOLINE SALES
TOTAL ACTIVE TANKS ON SITE: 0
TOTAL FACILITY CAPACITY: 0 GALLONS
OLD PBS NUMBER: **CBS NUMBER:** **SPDES NUMBER:**
ADDITIONAL ADDRESS INFO:

TYPE OF OWNER: CORPORATE/COMMERCIAL
OWNER SUB TYPE:
OWNER ADDRESS: 110 SAUNDER STREET
WHITEHALL NY 12887
PHONE: (518) 499-1556

EMERGENCY CONTACT: MARY JO ST CLAIR
PHONE: (518) 499-1018

MAILING NAME: MARTELLS AUTO SERVICE
ADDRESS: 45 W. POULTNEY STREET
WHITEHALL NY 12887
ATTENTION: MR. JAMES H. MARTELL
PHONE: (518) 499-0575

CERTIFICATE DATE: 5/16/97 **EXP. DATE:** 4/15/02
RENEWAL DATE: 1/2/97

TANK INFORMATION

TANK NUMBER: 001 **TANK STATUS:** CLOSED - REMOVED
INSTALLED: 12/1/63 **CLOSED:** 11/1/99
TANK CAPACITY: 4000 GALLONS
PRODUCT: UNLEADED GASOLINE

TANK TYPE: STEEL/CARBON STEEL
TANK LOCATION: UNDERGROUND
INTERNAL PROTECTION: NONE
EXTERNAL PROTECTION: PAINTED/ASPHALT COATING
PIPE TYPE: GALVANIZED STEEL
PIPE LOCATION: UNDERGROUND
INTERNAL PROTECTION: NONE
EXTERNAL PROTECTION: PAINTED/ASPHALT COATING
SECONDARY CONTAINMENT: NONE
LEAK DETECTION: NONE
OVERFILL PROTECTION: NONE
DISPENSER: SUCTION
DATE TESTED: 10/1/93
NEXT TEST:
TEST METHOD: AES SYSTEM II

- Continued on next page -

TANK NUMBER: 002 **TANK STATUS:** CLOSED - REMOVED

TARGET SITE: 16 POULTNEY ST
WHITEHALL NY 12887

JOB: 06.6448

REGISTERED UNDERGROUND STORAGE TANKS

SEARCH ID: 26 **DIST/DIR:** 0.08 NW **MAP ID:** 9

NAME: MARTELLS AUTO SERVICE
ADDRESS: 45 W. POULTNEY STR.
WHITEHALL NY 12887
WASHINGTON
CONTACT: JAMES H. MARTELL

REV: 1/1/02
ID1: PBS5-022802
ID2:
STATUS: UNREGULATED BY PBS
PHONE: (518) 499-0575

INSTALLED: 12/1/63 **CLOSED:** 11/1/99
TANK CAPACITY: 4000 GALLONS
PRODUCT: UNLEADED GASOLINE

TANK TYPE: STEEL/CARBON STEEL
TANK LOCATION: UNDERGROUND
INTERNAL PROTECTION: NONE
EXTERNAL PROTECTION: PAINTED/ASPHALT COATING
PIPE TYPE: GALVANIZED STEEL
PIPE LOCATION: UNDERGROUND
INTERNAL PROTECTION: NONE
EXTERNAL PROTECTION: PAINTED/ASPHALT COATING
SECONDARY CONTAINMENT: NONE
LEAK DETECTION: NONE
OVERFILL PROTECTION: NONE
DISPENSER: SUCTION
DATE TESTED: 10/1/93
NEXT TEST:
TEST METHOD: AES SYSTEM II

TANK NUMBER: 003 **TANK STATUS:** CLOSED - REMOVED
INSTALLED: 12/1/63 **CLOSED:** 11/1/99
TANK CAPACITY: 4000 GALLONS
PRODUCT: UNLEADED GASOLINE

TANK TYPE: STEEL/CARBON STEEL
TANK LOCATION: UNDERGROUND
INTERNAL PROTECTION: NONE
EXTERNAL PROTECTION: PAINTED/ASPHALT COATING
PIPE TYPE: GALVANIZED STEEL
PIPE LOCATION: UNDERGROUND
INTERNAL PROTECTION: NONE
EXTERNAL PROTECTION: PAINTED/ASPHALT COATING
SECONDARY CONTAINMENT: NONE
LEAK DETECTION: NONE
OVERFILL PROTECTION: NONE
DISPENSER: SUCTION
DATE TESTED: 9/1/93
NEXT TEST:
TEST METHOD: HORNER EZ CHECK

TANK NUMBER: 004 **TANK STATUS:** CLOSED - REMOVED
INSTALLED: 5/1/79 **CLOSED:** 11/1/99
TANK CAPACITY: 4000 GALLONS
PRODUCT: UNLEADED GASOLINE

TANK TYPE: STEEL/CARBON STEEL
TANK LOCATION: UNDERGROUND
INTERNAL PROTECTION: NONE
EXTERNAL PROTECTION: PAINTED/ASPHALT COATING
PIPE TYPE: GALVANIZED STEEL

- Continued on next page -

Environmental FirstSearch
Site Detail Report

TARGET SITE: 16 POULTNEY ST
WHITEHALL NY 12887

JOB: 06.6448

REGISTERED UNDERGROUND STORAGE TANKS

SEARCH ID: 26 **DIST/DIR:** 0.08 NW **MAP ID:** 9

NAME:	MARTELLS AUTO SERVICE	**REV:**	1/1/02
ADDRESS:	45 W. POULTNEY STR.	**ID1:**	PBS5-022802
	WHITEHALL NY 12887	**ID2:**	
	WASHINGTON	**STATUS:**	UNREGULATED BY PBS
CONTACT:	JAMES H. MARTELL	**PHONE:**	(518) 499-0575

PIPE LOCATION:	UNDERGROUND
INTERNAL PROTECTION:	NONE
EXTERNAL PROTECTION:	PAINTED/ASPHALT COATING
SECONDARY CONTAINMENT:	NONE
LEAK DETECTION:	NONE
OVERFILL PROTECTION:	NONE
DISPENSER:	SUCTION
DATE TESTED:	9/1/93
NEXT TEST:	
TEST METHOD:	HORNER EZ CHECK

TANK NUMBER:	005	**TANK STATUS:**	CLOSED - REMOVED
INSTALLED:		**CLOSED:**	11/1/99
TANK CAPACITY:	500 GALLONS		
PRODUCT:	USED OIL		

TANK TYPE:	STEEL/CARBON STEEL
TANK LOCATION:	UNDERGROUND
INTERNAL PROTECTION:	NONE
EXTERNAL PROTECTION:	NONE
PIPE TYPE:	STEEL/IRON
PIPE LOCATION:	UNDERGROUND
INTERNAL PROTECTION:	NONE
EXTERNAL PROTECTION:	NONE
SECONDARY CONTAINMENT:	NONE
LEAK DETECTION:	NONE
OVERFILL PROTECTION:	NONE
DISPENSER:	SUCTION
DATE TESTED:	
NEXT TEST:	
TEST METHOD:	

TARGET SITE: 16 POULTNEY ST
WHITEHALL NY 12887

JOB: 06.6448

REGISTERED UNDERGROUND STORAGE TANKS

SEARCH ID: 27 **DIST/DIR:** 0.14 NE **MAP ID:** 16

NAME:	STEWARTS ICE CREAM CO INC 211	**REV:**	1/1/02
ADDRESS:	60 POULTNEY ST	**ID1:**	PBS5-227951
	WHITEHALL NY 12887	**ID2:**	
	WASHINGTON	**STATUS:**	ACTIVE PBS FACILITY
CONTACT:	STEWARTS ICE CREAM CO INC	**PHONE:**	(518) 499-9941

PETROLEUM BULK STORAGE FACILITY INFORMATION

TYPE OF SITE: BC
TOTAL ACTIVE TANKS ON SITE: 3
TOTAL FACILITY CAPACITY: 16000 GALLONS
OLD PBS NUMBER: **CBS NUMBER:** **SPDES NUMBER:**
ADDITIONAL ADDRESS INFO:

TYPE OF OWNER: CORPORATE/COMMERCIAL
OWNER SUB TYPE:
OWNER ADDRESS: P O BOX 435
SARATOGA SPRINGS NY 12866
PHONE: (518) 581-1201

EMERGENCY CONTACT: DAVID ROTHBERG
PHONE: (518) 581-1201

MAILING NAME: STEWART S SHOPS CORP.
ADDRESS: P O BOX 435
SARATOGA SPRINGS NY 12866
ATTENTION: DAVID G. ROTHBERG
PHONE: (518) 581-1201

CERTIFICATE DATE: 5/5/97 **EXP. DATE:** 5/7/02
RENEWAL DATE: 4/15/97

TANK INFORMATION

TANK NUMBER: 001 **TANK STATUS:** CLOSED PRIOR TO 04/91 (IT IS EITHER IN PLACE OR REMOVED)
INSTALLED: 10/1/82 **CLOSED:**
TANK CAPACITY: 8000 GALLONS
PRODUCT: UNLEADED GASOLINE

TANK TYPE: STEEL/CARBON STEEL
TANK LOCATION: UNDERGROUND
INTERNAL PROTECTION:
EXTERNAL PROTECTION:
PIPE TYPE: GALVANIZED STEEL
PIPE LOCATION:
INTERNAL PROTECTION:
EXTERNAL PROTECTION:
SECONDARY CONTAINMENT: NONE
LEAK DETECTION: GROUNDWATER WELL
OVERFILL PROTECTION:
DISPENSER: SUCTION
DATE TESTED: 11/1/84
NEXT TEST:
TEST METHOD: UNKNOWN

- Continued on next page -

TARGET SITE: 16 POULTNEY ST
WHITEHALL NY 12887

JOB: 06.6448

REGISTERED UNDERGROUND STORAGE TANKS

SEARCH ID: 27 **DIST/DIR:** 0.14 NE **MAP ID:** 16

NAME:	STEWARTS ICE CREAM CO INC 211	**REV:**	1/1/02
ADDRESS:	60 POULTNEY ST	**ID1:**	PBS5-227951
	WHITEHALL NY 12887	**ID2:**	
	WASHINGTON	**STATUS:**	ACTIVE PBS FACILITY
CONTACT:	STEWARTS ICE CREAM CO INC	**PHONE:**	(518) 499-9941

TANK NUMBER:	002	**TANK STATUS:**	CLOSED PRIOR TO 04/91 (IT IS EITHER IN PLACE OR REMOVED)
INSTALLED:	10/1/82	**CLOSED:**	
TANK CAPACITY:	8000 GALLONS		
PRODUCT:	UNLEADED GASOLINE		
TANK TYPE:	STEEL/CARBON STEEL		
TANK LOCATION:	UNDERGROUND		
INTERNAL PROTECTION:			
EXTERNAL PROTECTION:			
PIPE TYPE:	GALVANIZED STEEL		
PIPE LOCATION:			
INTERNAL PROTECTION:			
EXTERNAL PROTECTION:			
SECONDARY CONTAINMENT:	NONE		
LEAK DETECTION:	GROUNDWATER WELL		
OVERFILL PROTECTION:			
DISPENSER:	SUCTION		
DATE TESTED:			
NEXT TEST:			
TEST METHOD:			

TANK NUMBER:	644	**TANK STATUS:**	IN SERVICE
INSTALLED:	4/1/91	**CLOSED:**	
TANK CAPACITY:	8000 GALLONS		
PRODUCT:	UNLEADED GASOLINE		
TANK TYPE:	STEEL/CARBON STEEL		
TANK LOCATION:	UNDERGROUND		
INTERNAL PROTECTION:	NONE		
EXTERNAL PROTECTION:	PAINTED/ASPHALT COATING, SACRIFICIAL ANODE		
PIPE TYPE:	STEEL/IRON		
PIPE LOCATION:	UNDERGROUND		
INTERNAL PROTECTION:	NONE		
EXTERNAL PROTECTION:	WRAPPED (PIPING), SACRIFICIAL ANODE		
SECONDARY CONTAINMENT:	DOUBLE-WALLED TANK		
LEAK DETECTION:	INTERSTITIAL MONITORING, GROUNDWATER WELL		
OVERFILL PROTECTION:	FLOAT VENT VALVE, CATCH BASIN		
DISPENSER:	SUBMERSIBLE		
DATE TESTED:			
NEXT TEST:			
TEST METHOD:			

TANK NUMBER:	645	**TANK STATUS:**	IN SERVICE
INSTALLED:	4/1/91	**CLOSED:**	
TANK CAPACITY:	4000 GALLONS		
PRODUCT:	UNLEADED GASOLINE		
TANK TYPE:	STEEL/CARBON STEEL		
TANK LOCATION:	UNDERGROUND		
INTERNAL PROTECTION:	NONE		

- Continued on next page -

Environmental FirstSearch
Site Detail Report

TARGET SITE: 16 POULTNEY ST
WHITEHALL NY 12887

JOB: 06.6448

REGISTERED UNDERGROUND STORAGE TANKS

SEARCH ID: 27 **DIST/DIR:** 0.14 NE **MAP ID:** 16

NAME:	STEWARTS ICE CREAM CO INC 211	**REV:**	1/1/02
ADDRESS:	60 POULTNEY ST	**ID1:**	PBS5-227951
	WHITEHALL NY 12887	**ID2:**	
	WASHINGTON	**STATUS:**	ACTIVE PBS FACILITY
CONTACT:	STEWARTS ICE CREAM CO INC	**PHONE:**	(518) 499-9941

EXTERNAL PROTECTION:	PAINTED/ASPHALT COATING, SACRIFICIAL ANODE
PIPE TYPE:	STEEL/IRON
PIPE LOCATION:	UNDERGROUND
INTERNAL PROTECTION:	NONE
EXTERNAL PROTECTION:	WRAPPED (PIPING), SACRIFICIAL ANODE
SECONDARY CONTAINMENT:	DOUBLE-WALLED TANK
LEAK DETECTION:	INTERSTITIAL MONITORING, GROUNDWATER WELL
OVERFILL PROTECTION:	FLOAT VENT VALVE, CATCH BASIN
DISPENSER:	SUBMERSIBLE
DATE TESTED:	
NEXT TEST:	
TEST METHOD:	

TANK NUMBER:	646	**TANK STATUS:**	IN SERVICE
INSTALLED:	4/1/91	**CLOSED:**	
TANK CAPACITY:	4000 GALLONS		
PRODUCT:	UNLEADED GASOLINE		

TANK TYPE:	STEEL/CARBON STEEL
TANK LOCATION:	UNDERGROUND
INTERNAL PROTECTION:	NONE
EXTERNAL PROTECTION:	PAINTED/ASPHALT COATING, SACRIFICIAL ANODE
PIPE TYPE:	STEEL/IRON
PIPE LOCATION:	UNDERGROUND
INTERNAL PROTECTION:	NONE
EXTERNAL PROTECTION:	WRAPPED (PIPING), SACRIFICIAL ANODE
SECONDARY CONTAINMENT:	DOUBLE-WALLED TANK
LEAK DETECTION:	INTERSTITIAL MONITORING, GROUNDWATER WELL
OVERFILL PROTECTION:	FLOAT VENT VALVE, CATCH BASIN
DISPENSER:	SUBMERSIBLE
DATE TESTED:	
NEXT TEST:	
TEST METHOD:	

TARGET SITE: 16 POULTNEY ST
WHITEHALL NY 12887

JOB: 06.6448

LEAKING UNDERGROUND STORAGE TANKS

SEARCH ID: 28 **DIST/DIR:** 0.27 SW **MAP ID:** 20

NAME: CHAMPLAIN OIL
ADDRESS: ROUTES 22 AND 4
WHITEHALL NY
WASHINGTON
CONTACT:

REV: 1/1/02
ID1: 8605132
ID2:
STATUS: CLOSED
PHONE:

SPILL DATE: 11/10/86
SPILL TIME: 00:00

DATE REPORTED: 11/10/86
TIME REPORTED: 16:30

MATERIAL SPILLED: GASOLINE
MATERIAL CLASS: PETROLEUM

AMOUNT SPILLED: 0 G
AMOUNT RECOVERED: 0 G

MATERIAL SPILLED: GASOLINE
MATERIAL CLASS: PETROLEUM

AMOUNT SPILLED: 0 G
AMOUNT RECOVERED: 0 G

CAUSE OF SPILL: TANK FAILURE
RESOURCE AFFECTED: GROUNDWATER
WATERBODY AFFECTED:
SOURCE OF SPILL: GASOLINE STATION
REPORTED BY: RESPONSIBLE PARTY
CALLER REMARKS:
TANK REPLACEMENT, FOUND TANK TO BE LEAKING, TO BE REMOVED, SOIL CONTAMINATED, TO BE STOCKPILED & DISPOSED OF. INFORMED CONTRACTOR TO CALL, SOLID WASTE TO WORK OUT DIRT REMOVAL. VILLAGE MAYOR LARRY BARNEY OKAYED TEMPORARY STORAGE.

REGION: 5 **UST TRUST?** T

SPILL INVESTIGATOR: GB
SPILL CONTACT: **TELEPHONE:**

SPILLER: CHAMPLAIN OIL
ADDRESS: BOX 2126
S. BURLINGTON , VT
SPILLER CONTACT: **TELEPHONE:** (800) 803-5574

CALLER:
AGENCY:
TELEPHONE:

NOTIFIER:
AGENCY:
TELEPHONE:

LAST DEC UPDATE: 03/18/99
DOES CLEAN UP MEET STANDARDS? T
DEC REMARKS:

CLOSE DATE: 11/11/86
PENALTY RECOMMENDED? F

TARGET SITE: 16 POULTNEY ST
WHITEHALL NY 12887

JOB: 06.6448

LEAKING UNDERGROUND STORAGE TANKS

SEARCH ID: 29 **DIST/DIR:** 0.39 SW **MAP ID:** 5

NAME: CUMBERLAND FARM STORE
ADDRESS: 916 BROADWAY
WHITEHALL NY
WASHINGTON
CONTACT:

REV: 10/15/05
ID1: 9104086
ID2:
STATUS: CLOSED 08/08/2002
PHONE:

SPILL DATE: 06/10/91
SPILL TIME: 08:00

DATE REPORTED: 06/24/91
TIME REPORTED: 08:00

MATERIAL SPILLED: GASOLINE
MATERIAL CLASS: PETROLEUM

AMOUNT SPILLED: 0 G
AMOUNT RECOVERED: 0 G

MATERIAL SPILLED: GASOLINE
MATERIAL CLASS: PETROLEUM

AMOUNT SPILLED: 0 G
AMOUNT RECOVERED: 0 G

CAUSE OF SPILL: TANK FAILURE
RESOURCE AFFECTED: ON LAND
WATERBODY AFFECTED:
SOURCE OF SPILL: GASOLINE STATION
REPORTED BY: OTHER
CALLER REMARKS:
8K TANK TOOK ON 800 GALLONS OF WATER, PUMPED OUT. NEXT DAY TOOK ON 2600 GALLONS; NEXT DAY TOOK OUT 2000 GALLONS. REPAIRED AND NOTIFIED DEC BSPR 14 DAYS LATER.

REGION: 5 **UST TRUST?** TRUE

SPILL INVESTIGATOR: MM
SPILL CONTACT: **TELEPHONE:**

SPILLER: CUMBERLAND FARMS
ADDRESS: 777 DEDHAM STREET
HAMPTON , MA 02021-
SPILLER CONTACT: EMIL TAYEK **TELEPHONE:** (617) 828-4900

CALLER:
AGENCY:
TELEPHONE:

NOTIFIER:
AGENCY:
TELEPHONE:

LAST DEC UPDATE: 04/04/00
DOES CLEAN UP MEET STANDARDS? FALSE
CLOSE DATE: / /
PENALTY RECOMMENDED? FALSE
DEC REMARKS:
06/19/91: HOLE FOUND IN TANK BOTTOM BELOW FILL OPENING, APPARENTLY CAUSED BY PENETRATION OF TANK GAUGING DIPSTICK; TANK REPAIRED. 08/16/91: LETTER SENT TO CUMBERLAND FARMS REQUIRED TANK TESTS AND SITE INVESTIGATION. 12/16/91: GWI REPORT COMPLETED BY I.E.P., INC. SITE REMEDIATION IS NECESSARY. 03/24/92: KESTREL HIRED TO PERFORM SITE REMEDIATION. 07/22/93: GES TAKES OVER SITE MONITORING FROM KESTREL. 11/15/93: DEPARTMENT STILL AWAITING REMEDIAL DESIGN/IMPLEMENTATION. 02/09/94: THREE ADDITIONAL MONITORING WELLS TO BE INSTALLED AT THE LOCATION. 07/14/94: DELAYS OCCUR IN OFFSITE ACCESS FOR MONITORING WELLS. 01/18/95: ADDITIONAL LETTER REQUESTING REMEDIATION PLAN SENT. 03/14/95: RAP REVIEWED AND APPROVED BY SUNA STONE-MCMASTERS. TOTAL FLUIDS EXTRACTION SYSTEM PROPOSED. 04/28/95: STIP SENT TO CUMBERLAND FARMS. 08/29/95: SVE EXTRACTION TO BE USED VERSUS HVAE SYSTEM. 08/15/97: REMEDIATION USING ORC SACKS VERSUS SVE APPROVED BY HOPE OATMAN.

- Continued on next page -

Environmental FirstSearch
Site Detail Report

TARGET SITE: 16 POULTNEY ST
WHITEHALL NY 12887

JOB: 06.6448

LEAKING UNDERGROUND STORAGE TANKS

SEARCH ID: 29 **DIST/DIR:** 0.39 SW **MAP ID:** 5

NAME:	CUMBERLAND FARM STORE	**REV:**	10/15/05
ADDRESS:	916 BROADWAY	**ID1:**	9104086
	WHITEHALL NY	**ID2:**	
	WASHINGTON	**STATUS:**	CLOSED 08/08/2002
CONTACT:		**PHONE:**	

Environmental FirstSearch
Site Detail Report

TARGET SITE: 16 POULTNEY ST
WHITEHALL NY 12887

JOB: 06.6448

LEAKING UNDERGROUND STORAGE TANKS

SEARCH ID: 30 **DIST/DIR:** 0.37 SW **MAP ID:** 6

NAME: D&H RAILROAD
ADDRESS: ROUTE 4
WHITEHALL NY
WASHINGTON
CONTACT:

REV: 10/15/05
ID1: 9608469
ID2:
STATUS: CLOSED 12/11/1996
PHONE:

SPILL DATE: 10/08/96
SPILL TIME: 10:30

DATE REPORTED: 10/08/96
TIME REPORTED: 10:49

MATERIAL SPILLED: #2 FUEL OIL
MATERIAL CLASS: PETROLEUM

AMOUNT SPILLED: 0 G
AMOUNT RECOVERED: 0 G

MATERIAL SPILLED: #2 FUEL OIL
MATERIAL CLASS: PETROLEUM

AMOUNT SPILLED: 0 G
AMOUNT RECOVERED: 0 G

CAUSE OF SPILL: TANK FAILURE
RESOURCE AFFECTED: GROUNDWATER
WATERBODY AFFECTED:
SOURCE OF SPILL: COMMERCIAL/INDUSTRIAL
REPORTED BY: OTHER
CALLER REMARKS:
LEAKING UST AT ABANDONED SITE (CLOSED) - D&H REP. 518-383-7235 FOR ROBERT CONROY

REGION: 5 **UST TRUST?** F

SPILL INVESTIGATOR: PH
SPILL CONTACT: **TELEPHONE:**

SPILLER: D&H RAILROAD
ADDRESS: RT4
WHITEHALL , NY
SPILLER CONTACT: BOB CONROY **TELEPHONE:** (518) 383-7235

CALLER:
AGENCY:
TELEPHONE:

NOTIFIER:
AGENCY:
TELEPHONE:

LAST DEC UPDATE: 12/11/96
DOES CLEAN UP MEET STANDARDS? F
DEC REMARKS:

CLOSE DATE: 12/11/96
PENALTY RECOMMENDED? F

TARGET SITE: 16 POULTNEY ST
WHITEHALL NY 12887

JOB: 06.6448

LEAKING UNDERGROUND STORAGE TANKS

SEARCH ID: 31 **DIST/DIR:** 0.37 SW **MAP ID:** 6

NAME: D&H RAILROAD YARD
ADDRESS: NORTH OF CPC 77
WHITEHALL NY
WASHINGTON
CONTACT:

REV: 10/15/05
ID1: 9608524
ID2:
STATUS: CLOSED 11/02/1998
PHONE:

SPILL DATE: 10/09/96
SPILL TIME: 07:50

DATE REPORTED: 10/09/96
TIME REPORTED: 08:40

MATERIAL SPILLED: UNKNOWN PETROLEUM
MATERIAL CLASS: PETROLEUM

AMOUNT SPILLED: 0 G
AMOUNT RECOVERED: 0 G

MATERIAL SPILLED: UNKNOWN PETROLEUM
MATERIAL CLASS: PETROLEUM

AMOUNT SPILLED: 0 G
AMOUNT RECOVERED: 0 G

CAUSE OF SPILL: TANK FAILURE
RESOURCE AFFECTED: ON LAND
WATERBODY AFFECTED:
SOURCE OF SPILL: COMMERCIAL/INDUSTRIAL
REPORTED BY: OTHER
CALLER REMARKS:
CALLERS COMPANY HIRED TO REMOVE ANOTHER TANK AND DISCOVERED THIS TANK DURING THE REMOVAL OF THE ORIGINAL TANK - SPILL HAS NOT BEEN CLEANED UP YET.

REGION: 5 **UST TRUST?** FALSE

SPILL INVESTIGATOR: HO
SPILL CONTACT: ROBERT CONROY **TELEPHONE:** (518) 383-7235

SPILLER: D & H RAILROADS
ADDRESS: PO BOX 8002
CLIFTON PARK , NY 12065-
SPILLER CONTACT: ROBERT CONROY **TELEPHONE:** (518) 383-7235

CALLER:
AGENCY:
TELEPHONE:

NOTIFIER:
AGENCY:
TELEPHONE:

LAST DEC UPDATE: 11/02/98
DOES CLEAN UP MEET STANDARDS? FALSE
CLOSE DATE: 11/02/98
PENALTY RECOMMENDED? FALSE
DEC REMARKS:
RFC: STATUS UNKNOWN. CLOSED - NOT CLEAN; NO FOLLOW-UP DUE TO LACK OF STAFF.

Environmental FirstSearch
Site Detail Report

TARGET SITE: 16 POULTNEY ST
WHITEHALL NY 12887

JOB: 06.6448

LEAKING UNDERGROUND STORAGE TANKS

SEARCH ID: 32 **DIST/DIR:** 0.44 NW **MAP ID:** 13

NAME: LONGTIN S
ADDRESS: 38 BROADWAY
WHITEHALL NY
WASHINGTON
CONTACT:

REV: 10/15/05
ID1: 9806158
ID2:
STATUS: CLOSED 10/09/2002
PHONE:

SPILL DATE: 08/18/98
SPILL TIME: 11:30

DATE REPORTED: 08/18/98
TIME REPORTED: 11:30

MATERIAL SPILLED: GASOLINE
MATERIAL CLASS: PETROLEUM

AMOUNT SPILLED: 0 G
AMOUNT RECOVERED: 0 G

MATERIAL SPILLED: GASOLINE
MATERIAL CLASS: PETROLEUM

AMOUNT SPILLED: 0 G
AMOUNT RECOVERED: 0 G

CAUSE OF SPILL: TANK FAILURE
RESOURCE AFFECTED: ON LAND
WATERBODY AFFECTED:
SOURCE OF SPILL: GASOLINE STATION
REPORTED BY: DEC
CALLER REMARKS:
GASOLINE-CONTAMINATED SOIL ENCOUNTERED DURING TANK REMOVAL.

REGION: 5 **UST TRUST?** TRUE

SPILL INVESTIGATOR: AF
SPILL CONTACT: KEITH LONGTON **TELEPHONE:** (518) 499-2616

SPILLER: KEITH J. LONGTIN
ADDRESS: 38 BROADWAY
WHITEHALL , NY 12887-
SPILLER CONTACT: KEITH LONGTIN **TELEPHONE:** (518) 499-2616

CALLER:
AGENCY:
TELEPHONE:

NOTIFIER:
AGENCY:
TELEPHONE:

LAST DEC UPDATE: 12/20/01
DOES CLEAN UP MEET STANDARDS? FALSE

CLOSE DATE: / /
PENALTY RECOMMENDED? FALSE

DEC REMARKS:
08/18/98: AK INVESTIGATED. AREA SUPPLIED BY PUBLIC WATER. ORIGINAL SOIL CONDITION IS HEAVY, DENSE CLAY. LONGTIN REMOVED AND CLEANED TANKS. CONTAMINATED SOIL WAS EXCAVATED AND TRANSPORTED TO LONGTIN S RESIDENCE APPROXIMATELY 2 MILES SOUTH ON ROUTE 4 TO WHERE IT WILL BE REMEDIATED VIA BIOCELLING. 11/19/99: BIOCELL TREATMENT FINALLY SCHEDULED TO BEGIN BY 11/21/99. THAT REMAINS TO BE SEEN. AK SENT LETTER WITH DEADLINE FOR TREATMENT INITIATION. 04/19/01: NO FURTHER INFORMATION RECEIVED. LETTER SENT REQUESTING BIOCELL TREATMENT DOCUMENTATION INCLUDING ANALYTICAL RESULTS OF WOIL SAMPLING, OR SOIL DISPOSAL RECEIPTS. 04/23/01: CALL RECEIVED FROM MRS. LONGTIN (499-0255). STATED PILE HAS BEEN COVERED SINCE LAST YEAR; FERTILIZER WAS ADDED. GS REQUESTED THAT THE PILE BE OPENED AND SAMPLED. 06/20/01: CALL RECEIVED FROM MRS. LONGTIN. AF CONFIRMED SAMPLING PROTOCOL; SHE WILL ALSO FAX LAT YEAR S RESULTS. 09/10/01: NO FURTHER INFORMATION RECEIVED; LETTER SENT. 10/16/01: CALL RECEIVED FROM MR. LES THOMAS (SEE SPILL # 9909231); LEARNED THAT HE HAD COMBINED CONTAMINATED SOIL FROM HIS SITE WITH THE LONGTIN S BIOCELL. REQUESTED COPIES OF PRIOR AND RECENT ANALYTICAL RESULTS. 10/30/01: TEST RESULTS FROM 10/99 RECEIVED; NEW TEST PENDING. 12/17/01: SAMPLING RESULTS RECEIVED; FILE REASSIGNED TO AF FOR REVIEW AND FOLLOW-UP.

Continued on next page

Environmental FirstSearch
Site Detail Report

TARGET SITE: 16 POULTNEY ST
WHITEHALL NY 12887

JOB: 06.6448

LEAKING UNDERGROUND STORAGE TANKS

SEARCH ID: 32 **DIST/DIR:** 0.44 NW **MAP ID:** 13

NAME: LONGTIN S
ADDRESS: 38 BROADWAY
WHITEHALL NY
WASHINGTON
CONTACT:

REV: 10/15/05
ID1: 9806158
ID2:
STATUS: CLOSED 10/09/2002
PHONE:

TARGET SITE: 16 POULTNEY ST
WHITEHALL NY 12887

JOB: 06.6448

LEAKING UNDERGROUND STORAGE TANKS

SEARCH ID: 33 **DIST/DIR:** 0.08 NW **MAP ID:** 9

NAME: MARTEL S MOBIL
ADDRESS: MAIN STREET
WHITEHALL NY
WASHINGTON
CONTACT:

REV: 1/1/02
ID1: 8709177
ID2:
STATUS: CLOSED
PHONE:

SPILL DATE: 01/27/88
SPILL TIME: 19:00

DATE REPORTED: 01/28/88
TIME REPORTED: 08:39

MATERIAL SPILLED: GASOLINE
MATERIAL CLASS: PETROLEUM

AMOUNT SPILLED: 0 G
AMOUNT RECOVERED: 0 G

MATERIAL SPILLED: GASOLINE
MATERIAL CLASS: PETROLEUM

AMOUNT SPILLED: 0 G
AMOUNT RECOVERED: 0 G

CAUSE OF SPILL: TANK TEST FAILURE
RESOURCE AFFECTED: GROUNDWATER
WATERBODY AFFECTED: NONE
SOURCE OF SPILL: GASOLINE STATION
REPORTED BY: TANK TESTER
CALLER REMARKS:
LEAK RATE .255 GPH - REG. GAS - 4,000 GAL. CAP. - 2 UNLEADED TANKS MANIFOLDED TOGETHER. 4,000 GAL CAP EACH - LEAK RATE .563 GPH. RETEST DONE ON 8/16/88, RESULTS SENT TO RAYBROOK.

REGION: 5 **UST TRUST?** TRUE

SPILL INVESTIGATOR: GB
SPILL CONTACT: **TELEPHONE:**

SPILLER: MARTEL S MOBIL
ADDRESS: MAIN STREET
WHITEHALL , NY 12887-
SPILLER CONTACT: **TELEPHONE:**

CALLER:
AGENCY:
TELEPHONE:

NOTIFIER:
AGENCY:
TELEPHONE:

LAST DEC UPDATE: 02/28/00
DOES CLEAN UP MEET STANDARDS? TRUE
DEC REMARKS:
/ / : EXCAVATE, ISOLATE & RETEST - WILL NOTIFY OF RETEST DATE.

CLOSE DATE: 08/16/88
PENALTY RECOMMENDED? FALSE

Environmental FirstSearch
Site Detail Report

TARGET SITE: 16 POULTNEY ST
WHITEHALL NY 12887

JOB: 06.6448

LEAKING UNDERGROUND STORAGE TANKS

SEARCH ID: 34 **DIST/DIR:** 0.08 NW **MAP ID:** 9

NAME: MARTEL S MOBIL
ADDRESS: ROUTE 4
WHITEHALL NY
WASHINGTON
CONTACT:

REV: 10/15/05
ID1: 9307923
ID2:
STATUS: CLOSED 08/28/1998
PHONE:

SPILL DATE: 09/29/93
SPILL TIME: 12:50

DATE REPORTED: 09/29/93
TIME REPORTED: 13:58

MATERIAL SPILLED: GASOLINE
MATERIAL CLASS: PETROLEUM

AMOUNT SPILLED: 0 G
AMOUNT RECOVERED: 0 G

MATERIAL SPILLED: GASOLINE
MATERIAL CLASS: PETROLEUM

AMOUNT SPILLED: 0 G
AMOUNT RECOVERED: 0 G

CAUSE OF SPILL: TANK TEST FAILURE
RESOURCE AFFECTED: ON LAND
WATERBODY AFFECTED:
SOURCE OF SPILL: GASOLINE STATION
REPORTED BY: TANK TESTER
CALLER REMARKS:
TWO 4K TANKS (MANIFOLD) FAILED AT RATE OF -0.8205 GPH UNDER 4 PSI, HORNER EZY I EXCAVATING; WILL REPAIR AND RETEST 10/12/93. PASSED RETEST.

REGION: 5 **UST TRUST?** TRUE

SPILL INVESTIGATOR: SM
SPILL CONTACT:
TELEPHONE:

SPILLER: J. MARTEL
ADDRESS: ROUTE 4
WHITEHALL , NY 12887-
SPILLER CONTACT:
TELEPHONE: (518) 499-0575

CALLER:
AGENCY:
TELEPHONE:

NOTIFIER:
AGENCY:
TELEPHONE:

LAST DEC UPDATE: 01/26/01
DOES CLEAN UP MEET STANDARDS? FALSE
DEC REMARKS:
RFC: PASSED RETEST.

CLOSE DATE: 08/28/98
PENALTY RECOMMENDED? FALSE

Environmental FirstSearch
Site Detail Report

TARGET SITE: 16 POULTNEY ST
WHITEHALL NY 12887

JOB: 06.6448

LEAKING UNDERGROUND STORAGE TANKS

SEARCH ID: 35 **DIST/DIR:** 0.15 NE **MAP ID:** 2

NAME: NYS ARMORY
ADDRESS: 62 POULTNEY STREET
WHITEHALL NY
WASHINGTON
CONTACT:

REV: 1/1/02
ID1: 8906193
ID2:
STATUS: CLOSED
PHONE:

SPILL DATE: 09/22/89
SPILL TIME: 12:30

DATE REPORTED: 09/22/89
TIME REPORTED: 14:30

MATERIAL SPILLED: DIESEL
MATERIAL CLASS: PETROLEUM
AMOUNT SPILLED: 0 G
AMOUNT RECOVERED: 0 G

MATERIAL SPILLED: DIESEL
MATERIAL CLASS: PETROLEUM
AMOUNT SPILLED: 0 G
AMOUNT RECOVERED: 0 G

CAUSE OF SPILL: TANK TEST FAILURE
RESOURCE AFFECTED: ON LAND
WATERBODY AFFECTED:
SOURCE OF SPILL: NON-COMMERCIAL/INSTITUTIONAL
REPORTED BY: TANK TESTER
CALLER REMARKS:
1,000 G DIESEL TANK FAILED TANK TEST.

REGION: 5 **UST TRUST?** TRUE

SPILL INVESTIGATOR: SL
SPILL CONTACT: **TELEPHONE:**

SPILLER: NYS ARMORY
ADDRESS: 62 POULTNEY STREET
WHITEHALL , NY
SPILLER CONTACT: BILL MORTELL **TELEPHONE:** (518) 499-0550

CALLER:
AGENCY:
TELEPHONE:

NOTIFIER:
AGENCY:
TELEPHONE:

LAST DEC UPDATE: 06/30/97
DOES CLEAN UP MEET STANDARDS? TRUE
CLOSE DATE: 12/12/90
PENALTY RECOMMENDED? FALSE
DEC REMARKS:
09/22/89: 1000G DIESEL TANK FAILED TT. ARMORY GOING TO REMOVE TANK. NEED TO CALL 9/25/89.

Environmental FirstSearch
Site Detail Report

TARGET SITE: 16 POULTNEY ST
WHITEHALL NY 12887

JOB: 06.6448

LEAKING UNDERGROUND STORAGE TANKS

SEARCH ID: 36 **DIST/DIR:** 0.15 NE **MAP ID:** 2

NAME:	NYS ARMORY	**REV:**	3/1/06
ADDRESS:	62 POULKNEY STREET	**ID1:**	0508105
	WHITE HALL NY	**ID2:**	
	WASHINGTON	**STATUS:**	CLOSED
CONTACT:		**PHONE:**	

SITE INFORMATION:

SPILL DATE:	10/06/2005
DATE REPORTED:	10/06/2005
SPILL TIME:	01:00 PM
TIME REPORTED:	02:42 PM
SPILLED MATERIAL:	#2 FUEL OIL
SPILLED AMOUNT:	GAL.
SPILL CAUSE:	TANK FAILURE
SPILL SOURCE:	INSTITUTIONAL, EDUCATIONAL, GOV., OTHER
RESOURCE AFFECTED:	GROUNDWATER
WATERBODY:	
REGION CLOSED DATE:	01/12/2006

TARGET SITE: 16 POULTNEY ST
WHITEHALL NY 12887

JOB: 06.6448

LEAKING UNDERGROUND STORAGE TANKS

SEARCH ID: 37 **DIST/DIR:** 0.15 NE **MAP ID:** 2

NAME: NYS ARMORY
ADDRESS: 62 POULTNEY ST.
WHITE HALL NY
WASHINGTON
CONTACT:

REV: 3/1/06
ID1: 0504886
ID2:
STATUS: CLOSED
PHONE:

SITE INFORMATION:

SPILL DATE:	07/22/2005
DATE REPORTED:	07/22/2005
SPILL TIME:	01:00 PM
TIME REPORTED:	03:05 PM
SPILLED MATERIAL:	#2 FUEL OIL
SPILLED AMOUNT:	0.0000 GAL.
SPILL CAUSE:	TANK TEST FAILURE
SPILL SOURCE:	COMMERCIAL/INDUSTRIAL
RESOURCE AFFECTED:	SOIL
WATERBODY:	
REGION CLOSED DATE:	01/13/2006

Environmental FirstSearch
Site Detail Report

TARGET SITE: 16 POULTNEY ST
WHITEHALL NY 12887

JOB: 06.6448

LEAKING UNDERGROUND STORAGE TANKS

SEARCH ID: 38 **DIST/DIR:** 0.21 SE **MAP ID:** 14

NAME: SCRIME RESIDENCE
ADDRESS: 107 SOUT WILLIAMS STREET
WHITEHALL NY
WASHINGTON
CONTACT:

REV: 10/15/05
ID1: 9306503
ID2:
STATUS: CLOSED 08/27/1993
PHONE:

SPILL DATE: 08/05/93
SPILL TIME: 10:00

DATE REPORTED: 08/05/93
TIME REPORTED: 14:20

MATERIAL SPILLED: #2 FUEL OIL
MATERIAL CLASS: PETROLEUM

AMOUNT SPILLED: 5 G
AMOUNT RECOVERED: 0 G

MATERIAL SPILLED: #2 FUEL OIL
MATERIAL CLASS: PETROLEUM

AMOUNT SPILLED: 5 G
AMOUNT RECOVERED: 0 G

CAUSE OF SPILL: TANK FAILURE
RESOURCE AFFECTED: ON LAND
WATERBODY AFFECTED:
SOURCE OF SPILL: PRIVATE DWELLING
REPORTED BY: OTHER
CALLER REMARKS:
TANK RUBBED AGAINST BRICK WALL AND DEVELOPED HOLE/LEAK. STAFF FROM CHAMPLAIN COAL COMPANY PUMPED OUT TANK, PICKED UP SPILL WITH SPEEDI-DRY.

REGION: 5 **UST TRUST?** FALSE

SPILL INVESTIGATOR: SM
SPILL CONTACT: **TELEPHONE:**

SPILLER: TONY & THERESA SCRIME
ADDRESS: 107 SOUTH WILLIAMS ST.
WHITEHALL , NY 12887-
SPILLER CONTACT: **TELEPHONE:** (518) 499-0677

CALLER:
AGENCY:
TELEPHONE:

NOTIFIER:
AGENCY:
TELEPHONE:

LAST DEC UPDATE: 01/24/01
DOES CLEAN UP MEET STANDARDS? TRUE
CLOSE DATE: 08/27/93
PENALTY RECOMMENDED? FALSE
DEC REMARKS:
RFC: HOMEOWNER CONFIRMS ADEQUATE SPILL CLEANUP; NO DEC INSPECTION NECESSARY. NO FURTHER ACTION.

Environmental FirstSearch
Site Detail Report

TARGET SITE: 16 POULTNEY ST
WHITEHALL NY 12887

JOB: 06.6448

LEAKING UNDERGROUND STORAGE TANKS

SEARCH ID: 39 **DIST/DIR:** 0.19 NE **MAP ID:** 15

NAME: STEWART S
ADDRESS: ROUTE 4
WHITEHALL NY
WASHINGTON
CONTACT:

REV: 10/15/05
ID1: 9100382
ID2:
STATUS: CLOSED 05/14/1997
PHONE:

SPILL DATE: 04/08/91
SPILL TIME: 11:30

DATE REPORTED: 04/08/91
TIME REPORTED: 11:30

MATERIAL SPILLED: GASOLINE
MATERIAL CLASS: PETROLEUM

AMOUNT SPILLED: 0 G
AMOUNT RECOVERED: 0 G

MATERIAL SPILLED: GASOLINE
MATERIAL CLASS: PETROLEUM

AMOUNT SPILLED: 0 G
AMOUNT RECOVERED: 0 G

CAUSE OF SPILL: TANK FAILURE
RESOURCE AFFECTED: ON LAND
WATERBODY AFFECTED:
SOURCE OF SPILL: GASOLINE STATION
REPORTED BY: RESPONSIBLE PARTY
CALLER REMARKS:
TWO 8K TANKS REMOVED. CONTAMINATION DISCOVERED. TO BE REMEDIATED ON SITE BY STEWARTS.

REGION: 5 **UST TRUST?** TRUE

SPILL INVESTIGATOR: PH
SPILL CONTACT: **TELEPHONE:**

SPILLER: STEWART S
ADDRESS: ROUTE 4
WHITEHALL , NY 12887-
SPILLER CONTACT: **TELEPHONE:**

CALLER:
AGENCY:
TELEPHONE:

NOTIFIER:
AGENCY:
TELEPHONE:

LAST DEC UPDATE: 03/24/00
DOES CLEAN UP MEET STANDARDS? FALSE
DEC REMARKS:
RM

CLOSE DATE: 05/14/97
PENALTY RECOMMENDED? FALSE

TARGET SITE: 16 POULTNEY ST
WHITEHALL NY 12887

JOB: 06.6448

LEAKING UNDERGROUND STORAGE TANKS

SEARCH ID: 40 **DIST/DIR:** 0.14 NE **MAP ID:** 16

NAME: STEWARTS#211
ADDRESS: 60 POULTNEY STREET
WHITEHALL NY
WASHINGTON
CONTACT:

REV: 3/1/06
ID1: 0409668
ID2:
STATUS: CLOSED
PHONE:

SITE INFORMATION:

SPILL DATE: 11/29/2004
DATE REPORTED: 11/29/2004
SPILL TIME: 03:45 PM
TIME REPORTED: 03:58 PM
SPILLED MATERIAL: UNKNOWN PETROLEUM

SPILLED AMOUNT: GAL.
SPILL CAUSE: TANK FAILURE
SPILL SOURCE: GASOLINE STATION
RESOURCE AFFECTED: SOIL
WATERBODY:

REGION CLOSED DATE: 09/30/2005

Environmental FirstSearch
Site Detail Report

TARGET SITE: 16 POULTNEY ST
WHITEHALL NY 12887

JOB: 06.6448

LEAKING UNDERGROUND STORAGE TANKS

SEARCH ID: 41 **DIST/DIR:** 0.35 NW **MAP ID:** 17

NAME: TOMS RESIDENCE
ADDRESS: 98 BROADWAY
WHITEHALL NY 12887
WASHINGTON
CONTACT:

REV: 3/1/06
ID1: 0280099
ID2:
STATUS: CLOSED
PHONE:

SITE INFORMATION:

SPILL DATE: 03/11/2003
DATE REPORTED: 03/11/2003
SPILL TIME: 10:30 AM
TIME REPORTED: 10:30 AM
SPILLED MATERIAL: UNKNOWN PETROLEUM

SPILLED AMOUNT: 0.0000 GAL.
SPILL CAUSE: TANK FAILURE
SPILL SOURCE: PRIVATE DWELLING
RESOURCE AFFECTED: SOIL
WATERBODY:

REGION CLOSED DATE: 04/29/2004

Environmental FirstSearch
Site Detail Report

TARGET SITE: 16 POULTNEY ST
WHITEHALL NY 12887

JOB: 06.6448

LEAKING UNDERGROUND STORAGE TANKS

SEARCH ID: 42 **DIST/DIR:** 0.43 NW **MAP ID:** 21

NAME: TOWN OF WHITEHALL
ADDRESS: 1 SAUNDERS ST.
WHITEHALL NY
WASHINGTON
CONTACT:

REV: 1/1/02
ID1: 8710530
ID2:
STATUS: CLOSED
PHONE:

SPILL DATE: 03/16/88
SPILL TIME: 16:30

DATE REPORTED: 03/16/88
TIME REPORTED: 18:16

MATERIAL SPILLED: GASOLINE
MATERIAL CLASS: PETROLEUM

AMOUNT SPILLED: 0 G
AMOUNT RECOVERED: 0 G

MATERIAL SPILLED: GASOLINE
MATERIAL CLASS: PETROLEUM

AMOUNT SPILLED: 0 G
AMOUNT RECOVERED: 0 G

CAUSE OF SPILL: TANK TEST FAILURE
RESOURCE AFFECTED: ON LAND
WATERBODY AFFECTED:
SOURCE OF SPILL: COMMERCIAL/INDUSTRIAL
REPORTED BY: TANK TESTER
CALLER REMARKS:
TANK IS OKAY. GOING TO RETEST PIPES. RETEST FAILED, TANK TAKEN OUT OF SERVICE,

REGION: 5 **UST TRUST?** T

SPILL INVESTIGATOR: RW
SPILL CONTACT:
TELEPHONE:

SPILLER: TOWN OF WHITEHALL
ADDRESS: 1 SAUNDERS ST.
WHITEHALL , NY 12887-
SPILLER CONTACT:
TELEPHONE: (518) 499-0871

CALLER:
AGENCY:
TELEPHONE:

NOTIFIER:
AGENCY:
TELEPHONE:

LAST DEC UPDATE: 02/28/00
DOES CLEAN UP MEET STANDARDS? T
DEC REMARKS:

CLOSE DATE: 08/26/88
PENALTY RECOMMENDED? F

TARGET SITE: 16 POULTNEY ST
WHITEHALL NY 12887

JOB: 06.6448

LEAKING UNDERGROUND STORAGE TANKS

SEARCH ID: 43 **DIST/DIR:** 0.37 SW **MAP ID:** 18

NAME: TROY SAVINGS BANK
ADDRESS: 184 BROADWAY
WHITEHALL NY
WASHINGTON
CONTACT:

REV: 10/15/05
ID1: 9108887
ID2:
STATUS: CLOSED 11/14/1991
PHONE:

SPILL DATE: 11/14/91
SPILL TIME: 12:00

DATE REPORTED: 11/14/91
TIME REPORTED: 12:35

MATERIAL SPILLED: #2 FUEL OIL
MATERIAL CLASS: PETROLEUM

AMOUNT SPILLED: 10 G
AMOUNT RECOVERED: 0 G

MATERIAL SPILLED: #2 FUEL OIL
MATERIAL CLASS: PETROLEUM

AMOUNT SPILLED: 10 G
AMOUNT RECOVERED: 0 G

CAUSE OF SPILL: TANK FAILURE
RESOURCE AFFECTED: ON LAND
WATERBODY AFFECTED:
SOURCE OF SPILL: NON-COMMERCIAL/INSTITUTIONAL
REPORTED BY: RESPONSIBLE PARTY
CALLER REMARKS:
MINOR AMOUNT OF CONTAMINATION DISCOVERED DURING DIGGING FOR MANHOLE. 500-GALLON HEATING OIL TANK. TANK REMOVED AND REPLACED.

REGION: 5 **UST TRUST?** F

SPILL INVESTIGATOR: HO
SPILL CONTACT:
TELEPHONE:

SPILLER: TROY SAVINGS BANK
ADDRESS: 184 BROADWAY
WHITEHALL , NY 12887-
SPILLER CONTACT:
TELEPHONE: (518) 499-2200

CALLER:
AGENCY:
TELEPHONE:

NOTIFIER:
AGENCY:
TELEPHONE:

LAST DEC UPDATE: 04/06/00
DOES CLEAN UP MEET STANDARDS? T
DEC REMARKS:

CLOSE DATE: 11/14/91
PENALTY RECOMMENDED? F

Environmental FirstSearch
Site Detail Report

TARGET SITE: 16 POULTNEY ST
WHITEHALL NY 12887

JOB: 06.6448

LEAKING UNDERGROUND STORAGE TANKS

SEARCH ID: 44 **DIST/DIR:** 0.31 NE **MAP ID:** 19

NAME: TROY SHIRTMAKERS CO.
ADDRESS: MOUNTAIN STREET
WHITEHALL NY
WASHINGTON
CONTACT:

REV: 10/15/05
ID1: 9210174
ID2:
STATUS: CLOSED 07/16/1998
PHONE:

SPILL DATE: 11/10/92
SPILL TIME: 12:00

DATE REPORTED: 12/02/92
TIME REPORTED: 15:05

MATERIAL SPILLED: GASOLINE
MATERIAL CLASS: PETROLEUM

AMOUNT SPILLED: 0 G
AMOUNT RECOVERED: 0 G

MATERIAL SPILLED: GASOLINE
MATERIAL CLASS: PETROLEUM

AMOUNT SPILLED: 0 G
AMOUNT RECOVERED: 0 G

CAUSE OF SPILL: TANK FAILURE
RESOURCE AFFECTED: ON LAND
WATERBODY AFFECTED:
SOURCE OF SPILL: COMMERCIAL/INDUSTRIAL
REPORTED BY: RESPONSIBLE PARTY
CALLER REMARKS:
COMPANY PERFORMING PRE-SALE ASSESSMENT. ONE TANK TESTED GOOD BUT ONE FAILED. CALLER WOULD LIKE MORE NAMES AND PHONE NUMBERS FOR CONTRACTORS.

REGION: 5 **UST TRUST?** TRUE

SPILL INVESTIGATOR: SM
SPILL CONTACT: ROBERT LOWE **TELEPHONE:** (518) 792-5806

SPILLER: TROY SHIRTMAKERS CO.
ADDRESS: MOUNTAIN STREET
WHITEHALL , NY 12887-
SPILLER CONTACT: ROBERT LOWE **TELEPHONE:** (518) 792-5806

CALLER:
AGENCY:
TELEPHONE:

NOTIFIER:
AGENCY:
TELEPHONE:

LAST DEC UPDATE: 02/02/99
DOES CLEAN UP MEET STANDARDS? FALSE
CLOSE DATE: 07/16/98
PENALTY RECOMMENDED? FALSE
DEC REMARKS:
-RM/TS LEBANON VALLEY LANDSCAPING CO. TO PULL TANK ASAP AND DISPOSE. RFC: LEBANON VALLEY PULLED TANK.

TARGET SITE: 16 POULTNEY ST
WHITEHALL NY 12887

JOB: 06.6448

LEAKING UNDERGROUND STORAGE TANKS

SEARCH ID: 45 **DIST/DIR:** 0.37 NW **MAP ID:** 22

NAME: U.S. POSTAL SERVICE
ADDRESS: MAIN STREET
WHITEHALL NY
WASHINGTON
CONTACT:

REV: 1/1/02
ID1: 8708620
ID2:
STATUS: CLOSED
PHONE:

SPILL DATE: 01/09/88
SPILL TIME: 14:00

DATE REPORTED: 01/09/88
TIME REPORTED: 21:15

MATERIAL SPILLED: #2 FUEL OIL
MATERIAL CLASS: PETROLEUM

AMOUNT SPILLED: 0 G
AMOUNT RECOVERED: 0 G

MATERIAL SPILLED: #2 FUEL OIL
MATERIAL CLASS: PETROLEUM

AMOUNT SPILLED: 0 G
AMOUNT RECOVERED: 0 G

CAUSE OF SPILL: TANK TEST FAILURE
RESOURCE AFFECTED: GROUNDWATER
WATERBODY AFFECTED: NONE
SOURCE OF SPILL: NON-COMMERCIAL/INSTITUTIONAL
REPORTED BY: TANK TESTER
CALLER REMARKS:
2,000 GAL. TANK - LEAK RATE -L.9 GPH (HIGH TEST LEAK RATE) WILL RETEST & NOTIFY OF DATE. POSSIBLE PROBLEM WITH VENT LINE. TANK RETESTED 5/31/88, PASSED, RESULTS IN PBS FILES.

REGION: 5 **UST TRUST?** T

SPILL INVESTIGATOR: MM
SPILL CONTACT: **TELEPHONE:**

SPILLER: U.S. POSTAL SERVICE
ADDRESS: MAIN STREET
WHITEHALL , NY 12887-
SPILLER CONTACT: **TELEPHONE:** (518) 499-0022

CALLER:
AGENCY:
TELEPHONE:

NOTIFIER:
AGENCY:
TELEPHONE:

LAST DEC UPDATE: 02/28/00
DOES CLEAN UP MEET STANDARDS? T
DEC REMARKS:

CLOSE DATE: 07/01/88
PENALTY RECOMMENDED? F

Environmental FirstSearch
Site Detail Report

TARGET SITE: 16 POULTNEY ST
WHITEHALL NY 12887

JOB: 06.6448

LEAKING UNDERGROUND STORAGE TANKS

SEARCH ID: 46 **DIST/DIR:** 0.37 NW **MAP ID:** 22

NAME: WHITEHALL POST OFFICE
ADDRESS: 88 BROADWAY
WHITEHALL NY
WASHINGTON
CONTACT:

REV: 1/1/02
ID1: 8903302
ID2:
STATUS: CLOSED
PHONE:

SPILL DATE: 06/28/89
SPILL TIME: 12:00

DATE REPORTED: 06/28/89
TIME REPORTED: 12:05

MATERIAL SPILLED: #2 FUEL OIL
MATERIAL CLASS: PETROLEUM

AMOUNT SPILLED: 0 G
AMOUNT RECOVERED: 0 G

MATERIAL SPILLED: #2 FUEL OIL
MATERIAL CLASS: PETROLEUM

AMOUNT SPILLED: 0 G
AMOUNT RECOVERED: 0 G

CAUSE OF SPILL: TANK FAILURE
RESOURCE AFFECTED: ON LAND
WATERBODY AFFECTED:
SOURCE OF SPILL: NON-COMMERCIAL/INSTITUTIONAL
REPORTED BY: OTHER
CALLER REMARKS:
REMOVED 2000 GAL. #2 FUEL TANK. REMOVED APPROXIMATELY 4 CU YDS OF CONT. SOIL. SOIL DEPOSITED IN LANDFILL.

REGION: 5 **UST TRUST?** F

SPILL INVESTIGATOR: SL
SPILL CONTACT: **TELEPHONE:**

SPILLER: WHITEHALL POST OFFICE
ADDRESS: 88 BROADWAY
WHITEHALL , NY 12887-
SPILLER CONTACT: **TELEPHONE:**

CALLER:
AGENCY:
TELEPHONE:

NOTIFIER:
AGENCY:
TELEPHONE:

LAST DEC UPDATE: 03/15/00
DOES CLEAN UP MEET STANDARDS? T
DEC REMARKS:

CLOSE DATE: 06/28/89
PENALTY RECOMMENDED? F

Environmental FirstSearch
Site Detail Report

TARGET SITE: 16 POULTNEY ST
WHITEHALL NY 12887

JOB: 06.6448

RCRA NLR SITE

SEARCH ID: 47 **DIST/DIR:** NON GC **MAP ID:**

NAME: NYSDEC RTE 4 BARREL SITE
ADDRESS: US RTE 4
WHITEHALL NY 12887
WASHINGTON
CONTACT:

REV: 4/16/06
ID1: NYD982538118
ID2:
STATUS: NLR
PHONE:

SITE INFORMATION

CONTACT INFORMATION: THOMAS VICKERSON
US RTE 4
WHITEHALL NY 12887

PHONE: 5184579280

UNIVERSE INFORMATION:

GOVERNMENT PERFORMANCE AND RESULTS ACT (GPRA)

GPRA PERMIT:	*N - NO*
GPRA POST CLOSURE:	*N - NO*
GPRA CA:	*N - NO*
GPRA COMPLIANCE MONITORING & ENFORCEMENT:	*N - NO*

SUBJECT TO CORRECTIVE ACTION (SUBJCA)

SUBJCA:	N - NO
SUBJCA TSD 3004:	N - NO
SUBJCA NON TSD:	N - NO
SIGNIFICANT NON-COMPLIANCE(SNC):	N - NO
BEGINNING OF THE YEAR SNC:	N - NO
PERMIT WORKLOAD:	----
CLOSURE WORKLOAD:	----
POST CLOSURE WORKLOAD:	----
PERMITTING /CLOSURE/POST-CLOSURE PROGRESS:	----
CORRECTIVE ACTION WORKLOAD:	N - NO
GENERATOR STATUS:	N

SECOND ID:		**OFF SITE RECEIPT:**	U - UNKNOWN
ACCESSIBILITY:		**COUNTY OWNER:**	
FED WSTE GEN OWNER:	HQ	**FED WASTE GEN:**	N
STATE WSTE GEN OWNER:	HQ	**STATE WSTE GEN:**	N - NO
SECOND ID:		**OFF SITE RECEIPT:**	U - UNKNOWN
ACCESSIBILITY:		**COUNTY OWNER:**	
FED WSTE GEN OWNER:	HQ	**FED WASTE GEN:**	2
STATE WSTE GEN OWNER:		**STATE WSTE GEN:**	

NAIC INFORMATION

- Continued on next page -

Environmental FirstSearch
Site Detail Report

TARGET SITE: 16 POULTNEY ST
WHITEHALL NY 12887

JOB: 06.6448

RCRA NLR SITE

SEARCH ID: 47 **DIST/DIR:** NON GC **MAP ID:**

NAME: NYSDEC RTE 4 BARREL SITE
ADDRESS: US RTE 4
WHITEHALL NY 12887
WASHINGTON
CONTACT:

REV: 4/16/06
ID1: NYD982538118
ID2:
STATUS: NLR
PHONE:

ENFORCEMENT INFORMATION:

VIOLATION INFORMATION:

HAZARDOUS WASTE INFORMATION:

X003
D000

Environmental FirstSearch Database Sources

NPL: ***EPA*** Environmental Protection Agency

Updated quarterly

CERCLIS: ***EPA*** Environmental Protection Agency

Updated quarterly

NFRAP: ***EPA*** Environmental Protection Agency.

Updated quarterly

RCRA TSD: ***EPA*** Environmental Protection Agency.

Updated quarterly

RCRA COR: ***EPA*** Environmental Protection Agency.

Updated quarterly

RCRA GEN: ***EPA*** Environmental Protection Agency.

Updated quarterly

RCRA NLR: ***EPA*** Environmental Protection Agency

Updated quarterly

ERNS: ***EPA/NRC*** Environmental Protection Agency

Updated semi-annually

STATE SITES: ***NYSDEC*** New York Department of Environmental Remediation
New York State Department of Environmental Conservation

Updated quarterly

SPILLS-1990: ***NYSDEC*** New York State Department of Environmental Conservation

Updated quarterly

SPILLS-1980: ***NYSDEC*** New York State Department of Environmental Conservation

Updated quarterly

SWL: ***NYSDEC*** New York State Department of Environmental Conservation

Updated annually

REG UST/AST: ***NYSDEC*** New York State Department of Environmental Conservation
Nassau County Department of Health
Nassau County Fire Marshal
Cortland County Health Department
Rockland County Department of Health

Updated quarterly

LEAKING UST: ***NYSDEC*** New York State Department of Environmental Conservation

Updated quarterly

RADON: ***NTIS*** Environmental Protection Agency, National Technical Information Services

Updated periodically

Environmental FirstSearch

1 Mile Radius

ASTM Map: NPL, RCRACOR, STATE Sites

16 POULTNEY ST, WHITEHALL NY 12887

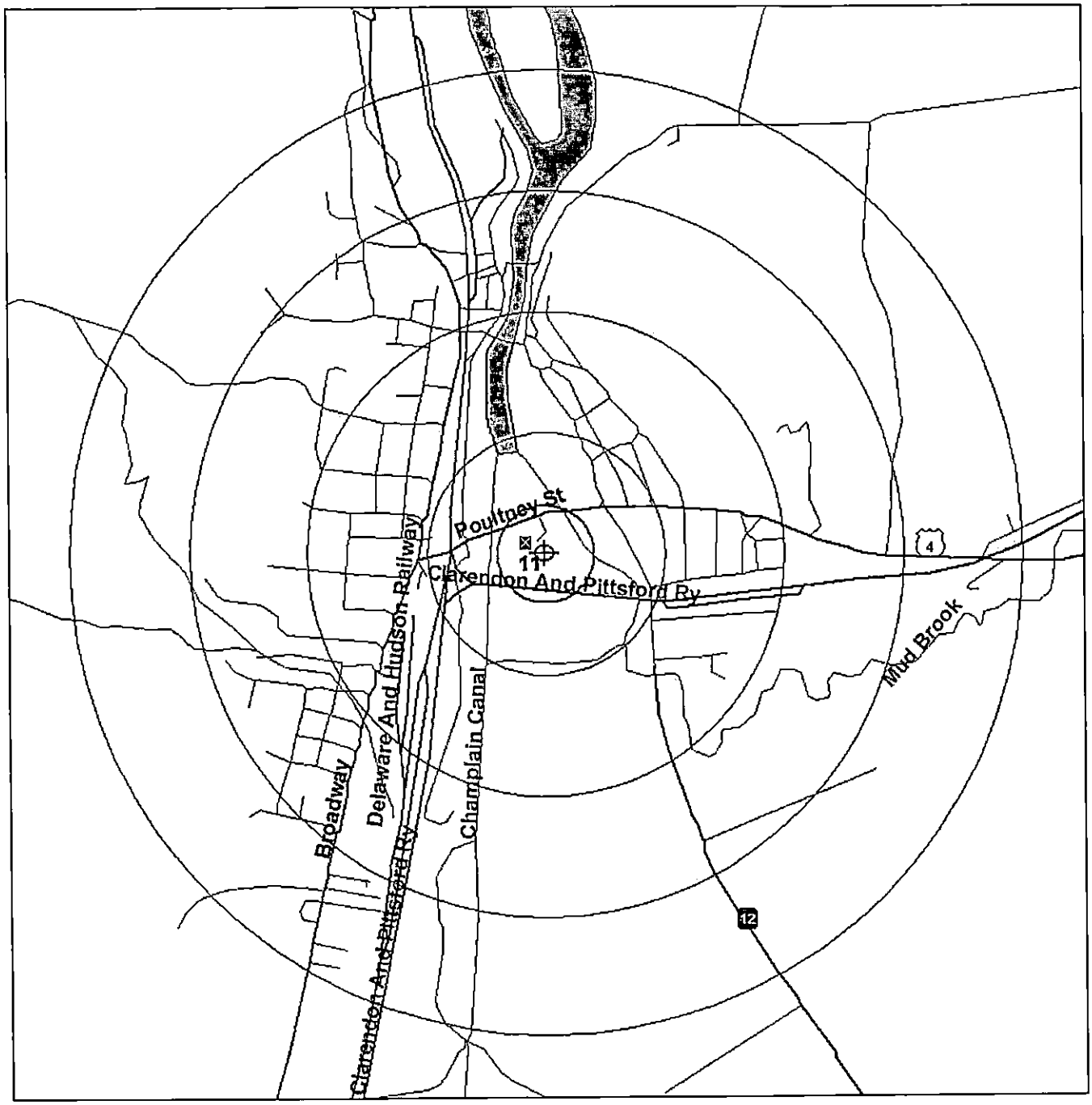

Source: 2002 U.S. Census TIGER Files

Target Site (Latitude: 43.548747 Longitude: -73.399722) .....

ntified Site, Multiple Sites, Receptor .....

L, Brownfield, Solid Waste Landfill (SWL) or Hazardous Waste

Railroads .....

Black Rings Represent 1/4 Mile Radius; Red Ring Represents 500 ft. Radius

Environmental FirstSearch

.5 Mile Radius

ASTM Map: CERCLIS, RCRATSD, LUST, SWL

16 POULTNEY ST, WHITEHALL NY 12887

Source: 2002 U.S. Census TIGER Files

Target Site (Latitude: 43.548747 Longitude: -73.399722) .....

ntified Site, Multiple Sites, Receptor .....

L, Brownfield, Solid Waste Landfill (SWL) or Hazardous Waste

Railroads .....

Black Rings Represent 1/4 Mile Radius; Red Ring Represents 500 ft. Radius

Environmental FirstSearch

.25 Mile Radius

ASTM Map: RCRAGEN, ERNS, UST

16 POULTNEY ST, WHITEHALL NY 12887

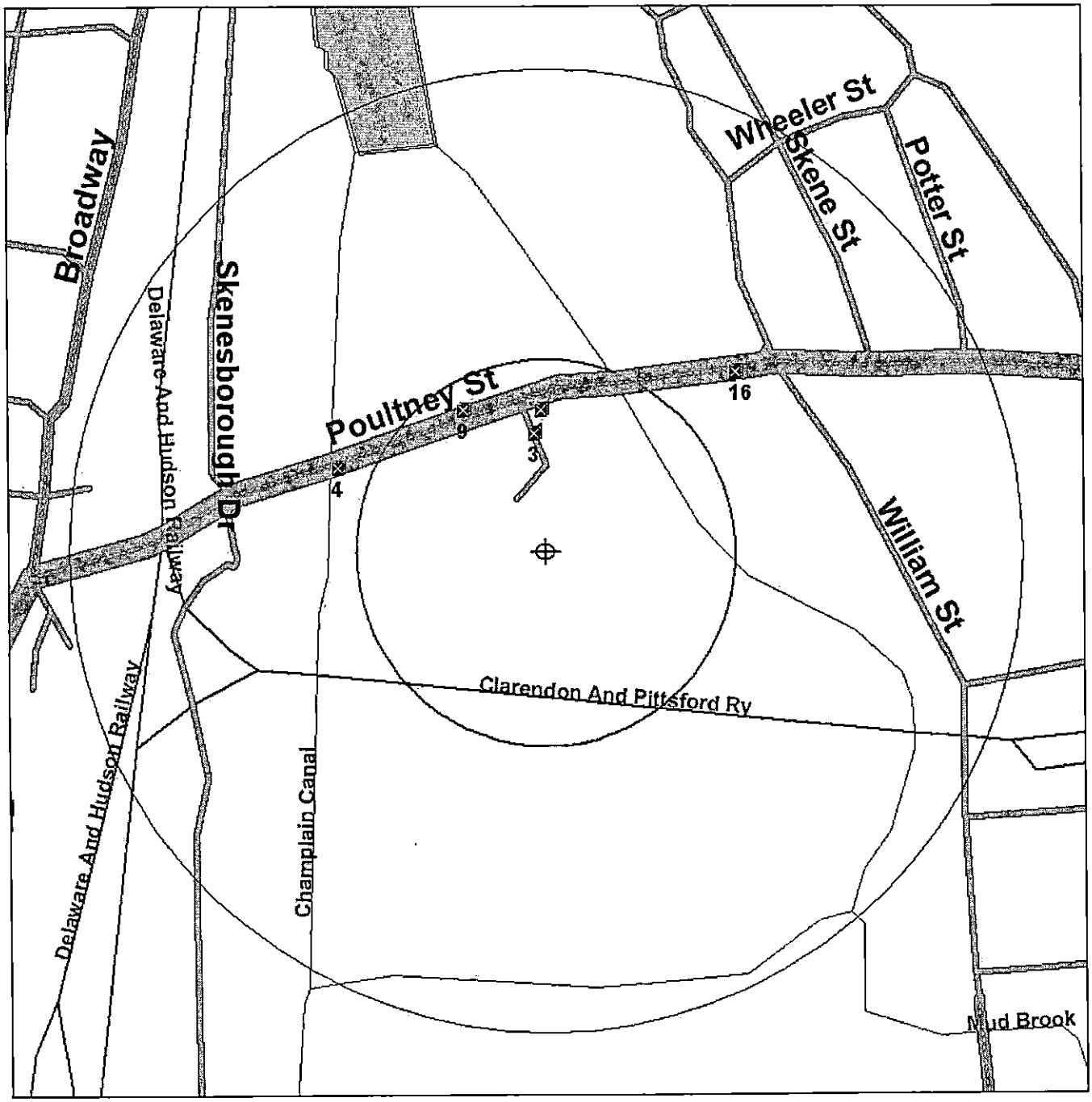

Source: 2002 U.S. Census TIGER Files

Target Site (Latitude: 43.548747 Longitude: -73.399722) .....

ıtified Site, Multiple Sites, Receptor .....

, Brownfield, Solid Waste Landfill (SWL) or Hazardous Waste

Railroads .....

Black Rings Represent 1/4 Mile Radius; Red Ring Represents 500 ft. Radius

Environmental FirstSearch

.5 Mile Radius

Non-ASTM Map: RCRANLR, Spills 90, Spills 80

16 POULTNEY ST, WHITEHALL NY 12887

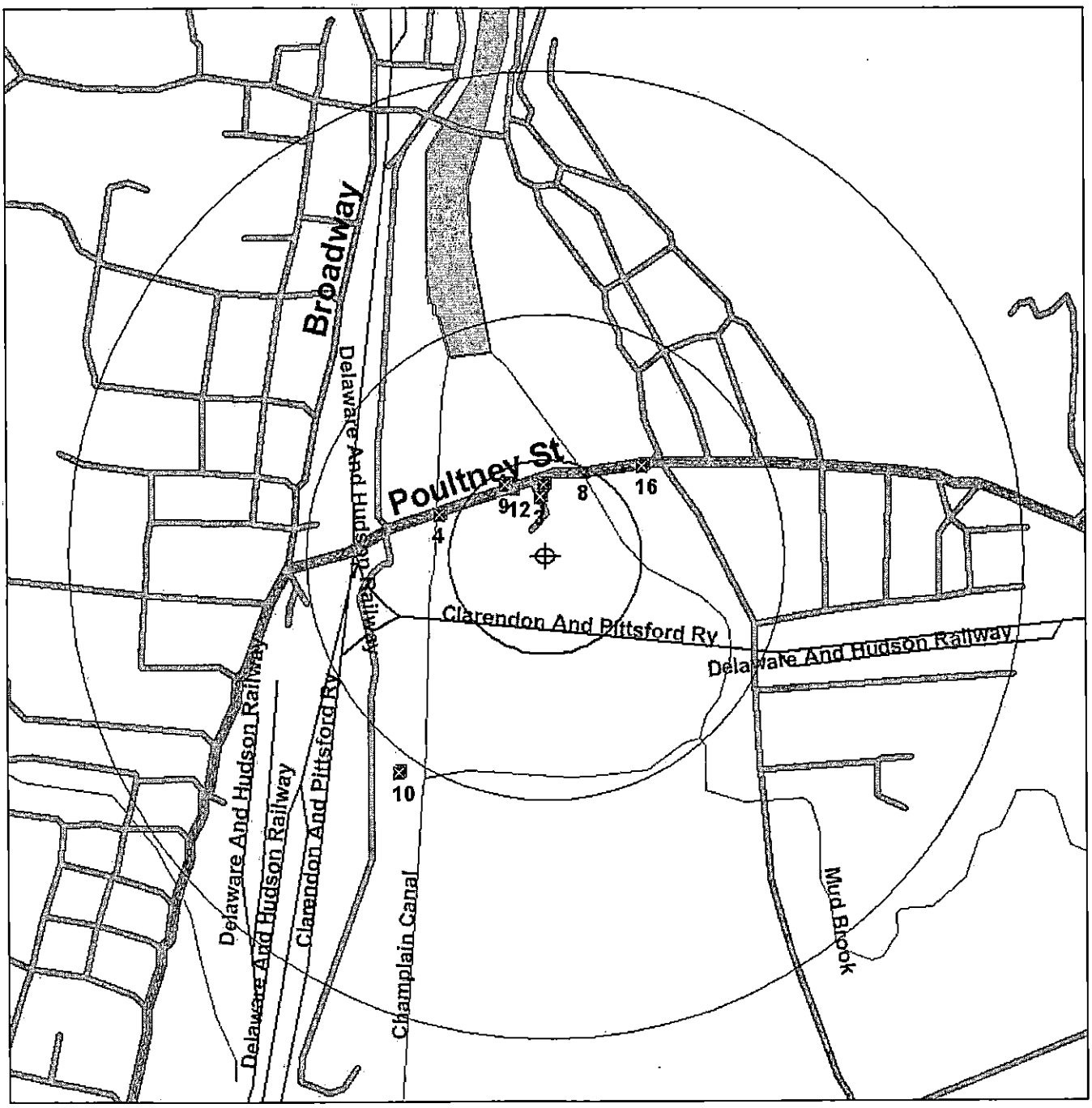

Source: 2002 U.S. Census TIGER Files

Target Site (Latitude: 43.548747 Longitude: -73.399722) .....

ntified Site, Multiple Sites, Receptor .....

L, Brownfield, Solid Waste Landfill (SWL) or Hazardous Waste

National Historic Sites and Landmark Sites .....

Railroads .....

Black Rings Represent 1/4 Mile Radius; Red Ring Represents 500 ft. Radius

APPENDIX E

Sampling Results and Information Pertaining to the Poultney Street Hazardous Waste Facility

REMEDIAL INVESTIGATION/ FEASIBILITY STUDY WORK PLAN

PROJECT MANAGEMENT WORK PLAN

WORK ASSIGNMENT D003825-32

POULTNEY STREET SITE
WHITEHALL (V)

SITE NO. 5-58-019
WASHINGTON (C), NY

Prepared for:
NEW YORK STATE
DEPARTMENT OF ENVIRONMENTAL CONSERVATION
625 Broadway, Albany, New York

Erin M. Crotty, Commissioner

DIVISION OF ENVIRONMENTAL REMEDIATION

URS Corporation Group Consultants
282 Delaware Avenue
Buffalo, New York 14202

FINAL
November 2001

G3441

1.0 INTRODUCTION

This *Project Management Work Plan* has been prepared to identify the activities and costs for the Remedial Investigation/Feasibility Study (RI/FS) at the Poultney Street site in Whitehall, Washington County, New York. This is Work Assignment No. 32 under URS Corporation Group Consultants' (URS's) Standby Contract with the New York State Department of Environmental Conservation (NYSDEC). The separately bound *Field Sampling Plan (FSP)* and *Quality Assurance Project Plan (QAPP)* specifies the number and location of field samples to be obtained during RI field activities, and the procedures to be followed during sample collection.

1.1 Site Background

The site is an unimproved parcel of land, approximately two acres in size, south of the E.B. Metals Facility on Route 4 in the Village of Whitehall, Washington County (Figure 1-1). The site is on land owned by the Clarendon and Pittsford Railroad Company, and is approximately bounded by E.B. Metals to the north, the raised railroad embankment to the south, the Champlain Canal to the west, and a point 500 feet from the canal to the east. The site is located on an island bounded by Wood Creek on the north, east, and south, and the Champlain Canal on the west. The island is zoned light industrial.

The site consists of a drum disposal area on the western portion of the property, and a former fire training area near the center of the property. In the early 1970's, the site was used for training exercises by seven local fire departments. The local fire departments brought containers of flammable materials, solicited and obtained from various sources, to the property for fire extinguishing training and practice. In 1989, forty drums were identified and removed from this area and subsequently sampled and shipped offsite for proper disposal. The drum contents were found to contain acetone, trichloroethene, lighter polycyclic aromatic hydrocarbons (PAHs), phthalates, and benzene, toluene, ethylbenzene and xylene (BTEX). NYSDEC collected environmental samples in late 1989 and a number of contaminants were identified, including, but not limited to, acetone, xylene, toluene, trichloroethene (TCE) and 1,1,2-trichloroethane (1,1,2-TCA). Based on the 1989 data, a NYSDEC contractor took additional samples in 1995, finding volatile organic compounds (VOCs) in both soil and groundwater.

MW-2 and MW-3: The observation of higher concentrations in 1998 in the downgradient PZ-12 compared to PZ-9 suggest that there may be another source of subsurface contamination on the property, in addition, to, the abandoned fire training trench. Therefore, URS will install two wells (designated as MW-2 and MW-3) approximately 20 feet to the north and south, respectively, of PZ-12, as depicted on Figure 2-1. These locations may be adjusted depending on results from screening during soil boring in this area.

MW-4: In order to delineate the magnitude and extent of the contaminant plume emanating from the site, and to assess if the plume has migrated downgradient beyond the property limits, URS will install monitoring well MW-4 at the location depicted on the attached Field Investigation Plan. This location was chosen based on review of the Groundwater Elevation Contour Map presented in Figure 5 of the RI/FS Report, and the elevated concentration of TCE at PZ-12. In addition, should planned well MW-3 be found contaminated, comparison of concentrations in MW-4 to MW-3 may provide insight regarding whether the sewer line is intercepting any of the plume.

MW-5: Groundwater flow is principally to the north, but has a westward component from the trench as well, heading towards the canal. The groundwater in the area northwest of the trench is uncharacterized, except for PZ-4 located about 100 feet away. Thus, URS recommends installation of MW-5 approximately 50 feet northwest of the trench.

URS also recommends installation of one deep well in the source area to determine whether contamination has vertically migrated. The soil boring program will evaluate contamination at depth; however, it will not be capable of identifying deep groundwater contamination. The following deep well will be installed.

MW-6: This deep well will be installed directly within the trench. Screen location will be determined in the field, and preferably will be located above a thicker confining layer of clay, silt or till but not deeper than 30 feet bgs. Some stratigraphic information will be available from soil borings advanced in this area for the soil investigation to assist in this decision. If a split spoon sample taken during well installation reveals that a low permeability area acting as a confining layer between upper and lower water bearing zones is encountered, then the borehole will be immediately halted and backfilled with cement/bentonite grout. The project geologist will confer

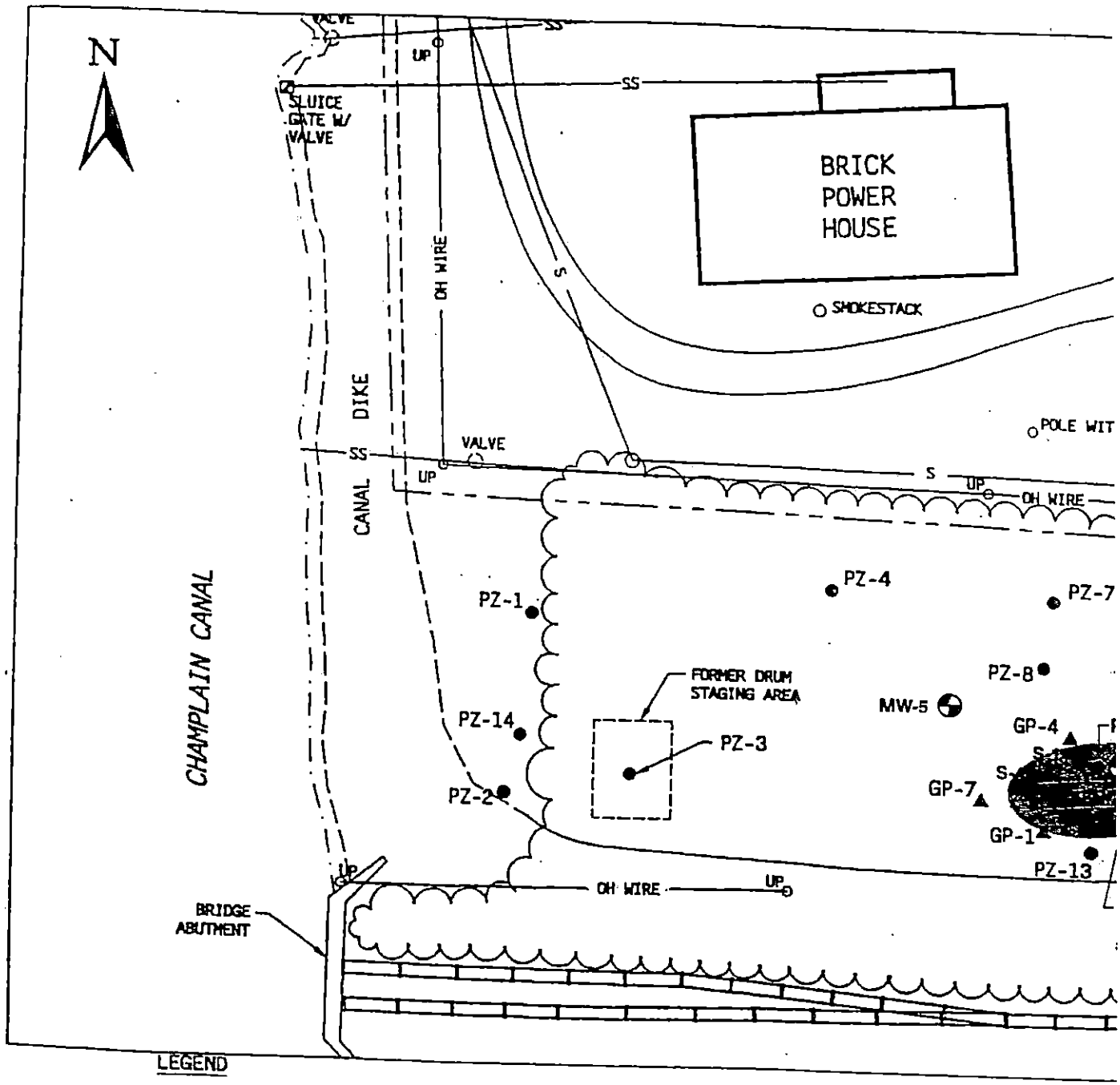

LEGEND

- PZ-1 — SOIL BORING/TEMPORARY PIEZOMETER LOCATION AND ID
- GP-1 — SOIL BORING LOCATION AND ID
- PROPERTY LINE
- FENCE
- CATCH BASIN
- MH — MANHOLE
- SMH — SANITARY MANHOLE
- UP — UTILITY POLE
- FH — FIRE HYDRANT
- OH WIRE — OVERHEAD WIRE
- S — SANITARY SEWER LINE
- SS — STORM SEWER LINE
- EDGE OF WATER BODY

PROPOSED SOIL SAMPLING LOCATIO

MW-1 PROPOSED MONITORING WELL LOCA

SOURCE: "Remdial Investigation/Feasibility Study Report for the Poultney Street Site", Environmental Liability Management, Inc. 1

AG16833-35944.01-050301-GCM

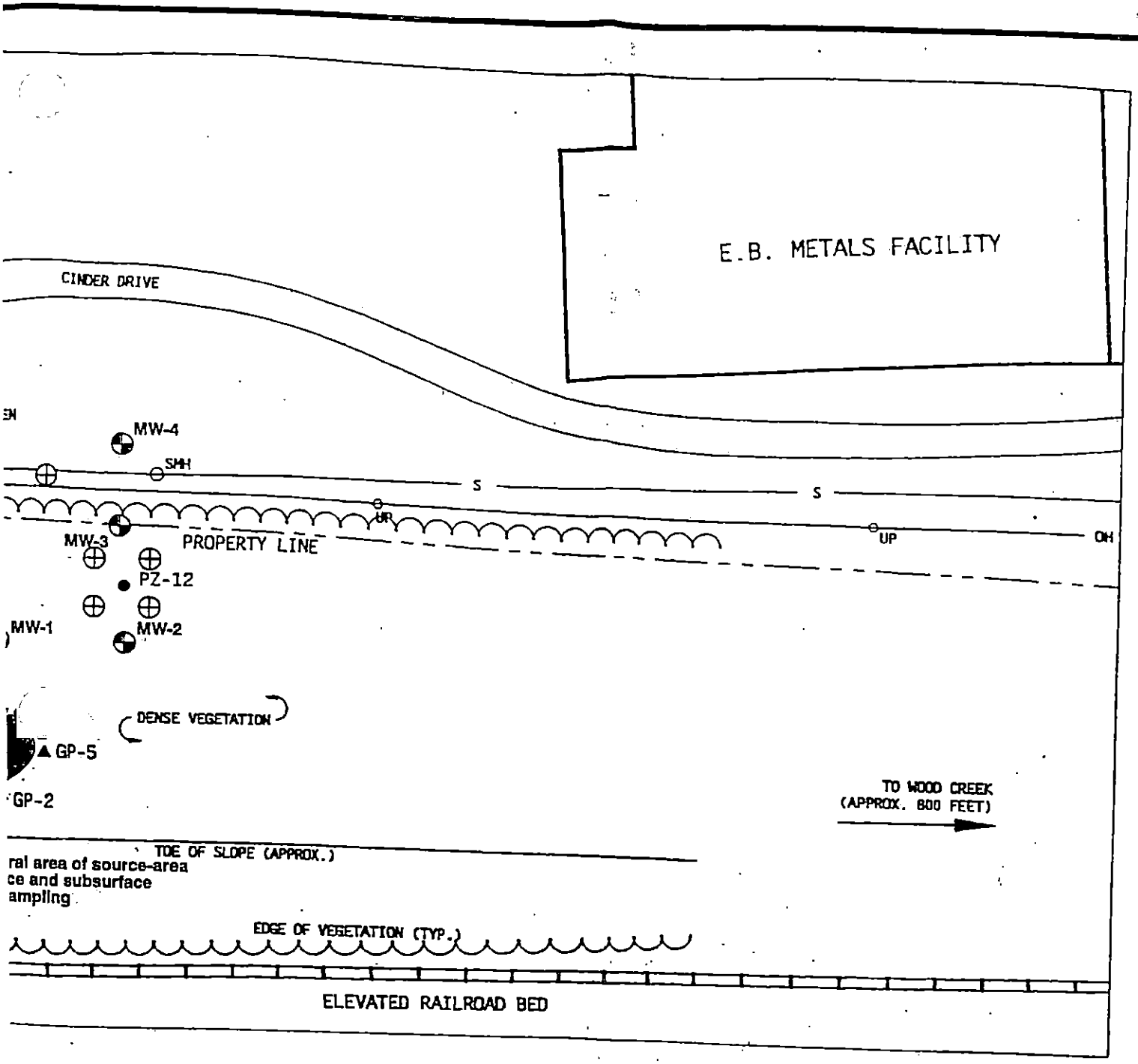

ral area of source-area
ce and subsurface
ampling

IS

URS

POULTNEY STREET
FIELD INVESTIGATION SITE PLAN

FIGURE 2-1

URS

June 19, 2002

Old Champlain Mills Inc.
308 West River Road
Gansevoort, N.Y. 12831

Re: Poultney Street Site Sampling Results

To whom it may concern:

URS Corporation is writing on behalf of our client, the New York State Department of Environmental Conservation (NYSDEC) regarding environmental sampling that has been conducted at the Poultney Street Site in Whitehall New York. During field work on June 17, 2002, a member of our staff was approached by Mr. George Story, who indicated he represented the owner of the former EB Metals property, which is located immediately north of the site. Mr. Story requested a copy of the results of samples taken on this property. With this letter, we are providing you with these results. Mr. Story did not provide us with an address, but we are sending these results to Old Champlain Mills, which is listed as the owner of this property.

As shown on the included figure, samples were taken from four locations on your property. This included two surface soil samples (SS-05 and SS-06), one subsurface sample (SB-19), and a groundwater sample from monitoring well MW-04. The surface soil samples were analyzed for semi-volatile organic compounds (SVOCs), only. The subsurface soils were analyzed for both volatile and semi-volatile organic compounds. The groundwater was analyzed for volatile organic compounds (VOCs). Additionally, some other non-pollutant parameters were measured because they can help us determine whether any natural degradation processes are occurring if and when contamination is detected.

The results from the surface soil analyses are presented on the attached table. Some low levels of polycyclic aromatic hydrocarbons (PAHs) were detected. These common compounds do not appear to be site-related, and in fact were not seen in surface soils taken on the site itself. The groundwater sample from MW-04 did not contain any VOC contamination. The data from SB-19 are presented on the second table. Three VOCs were detected at very low levels.

If you have any further questions, please contact Mr. Russell Huyck of NYSDEC at 518-897-1242.

Sincerely yours,

URS CORPORATION

Jon Sundquist, Ph.D.
Project Manager

cc: Russell Huyck, P.E.
Stephen B. Le Fevre, PG, CPG

URS Corporation
282 Delaware Avenue
Buffalo, NY 14202-1805
Tel: 716.856.5636
Fax: 716.856.2545

J:\35944.01\word\cor\EB Metals data

TABLE 4-1
SUMMARY OF SURFACE SOIL ANALYTICAL DATA
POULTNEY STREET

Location ID			SS-05	SS-06	
Sample ID			SS-5	SS-6	
Matrix			Soil	Soil	
Depth Interval (ft)			-	-	
Date Sampled			12/20/01	12/20/01	
Parameter	Units	Criteria*			
Semivolatile Organic Compounds	ppb				
Anthracene	UG/KG	50000	93 J		
Benzo(a)anthracene	UG/KG	224	310 J	78 J	224
Benzo(a)pyrene	UG/KG	61	310 J	81 J	61
Benzo(b)fluoranthene	UG/KG	1100	250 J	71 J	
Benzo(g,h,i)perylene	UG/KG	50000	120 J	44 J	
Benzo(k)fluoranthene	UG/KG	1100	250 J	65 J	
Carbazole	UG/KG	-	35 J		
Chrysene	UG/KG	400	310 J	87 J	
Dibenz(a,h)anthracene	UG/KG	14	48 J		14
Fluoranthene	UG/KG	50000	530	130 J	
Fluorene	UG/KG	50000	25 J		
Indeno(1,2,3-cd)pyrene	UG/KG	3200	170 J	53 J	
Phenanthrene	UG/KG	50000	360 J	70 J	
Pyrene	UG/KG	50000	560	130 J	
Miscellaneous Parameters					
Total Organic Carbon (TOC)	MG/KG	-	85,410	92,090	

*Criteria- NYSDEC TAGM: Determination of Soil Cleanup Objectives and Cleanup Levels; HWR-94-4046 January 24, 1994 (Revised). Recommended Cleanup Objectives.

Flags assigned during chemistry validation are shown.

Concentration Exceeds Criteria.

J - The reported concentration is an estimated value.

Only Detected Results Reported.

J:\135644.01\tbl\Program\Program.mxd
Printed: 8/16/02 1:41:42 PM
[LOCID] = 'SS-05' OR [LOCID] = 'SS-06'

TABLE 4-2
SUMMARY OF SUBSURFACE SOIL ANALYTICAL DATA
POULTNEY STREET

Location ID			SB-19
Sample ID			SB19-2-4
Matrix			Soil
Depth Interval (ft)			2.0-4.0
Date Sampled			01/21/02
Parameter	Units	Criteria*	
Volatile Organic Compounds			
1,1,2-Trichloro-1,2,2-trifluoroethane	UG/KG	6000	
1,1-Dichloroethene	UG/KG	400	
1,2-Dichloroethene (cis)	UG/KG	-	3 J
1,2-Dichloroethene (trans)	UG/KG	300	
Acetone	UG/KG	200	
Benzene	UG/KG	60	
Carbon disulfide	UG/KG	2700	
Chloromethane	UG/KG	-	
Cyclohexane	UG/KG	-	
Ethylbenzene	UG/KG	5500	
Isopropylbenzene (Cumene)	UG/KG	-	
Methyl acetate	UG/KG	-	
Methyl ethyl ketone (2-Butanone)	UG/KG	300	
Methylcyclohexane	UG/KG	-	
Methylene chloride	UG/KG	100	
Tetrachloroethene	UG/KG	1400	
Toluene	UG/KG	1500	1 J
Trichloroethene	UG/KG	700	7 J
Vinyl chloride	UG/KG	200	
Xylene (total)	UG/KG	1200	
Semivolatile Organic Compounds			
1,1'-Biphenyl	UG/KG	-	
2-Methylnaphthalene	UG/KG	36400	

*Criteria- NYSDEC TAGM: Determination of Soil Cleanup Objectives and Cleanup Levels; HWR-94-4046 January 24, 1994 (Revised). Recommended Cleanup Objectives.

Flags assigned during chemistry validation are shown.

Concentration Exceeds Criteria.

D - Result reported from a secondary dilution analysis.
J - The reported concentration is an estimated value.
NA - Not analyzed.
R - The data is rejected.

Only Detected Results Reported.

Advanced Selection: SUBSURFACE SOIL
[illegible]
Revised: 4/11/02 1:30:47 PM
[LOCID] NOT LIKE "SS" AND [MATRIX] = "SO"

APPENDIX F

Previous Environmental Site Assessment

PRIVILEGED AND CONFIDENTIAL

June 28, 2002

Draft Phase I Environmental Site Assessment Old Champlain Mill Site 16-50 Poultney Street Village of Whitehall Washington County, New York

Prepared for:

Mr. John McMahon
McMahon and Cosco
Box 587
Saratoga Springs, New York 12866

Prepared by:

C.T. MALE ASSOCIATES, P.C.
50 Century Hill Drive
P.O. Box 727
Latham, New York 12110
(518) 786-7400
FAX (518) 786-7299

C.T. Male Project No: 02.8340

Unauthorized alteration or addition to this document is a violation of Section 7209 Subdivision 2 of the New York State Education Law.

© Copyright 2002
C.T. MALE ASSOCIATES, P.C.

PHASE I
ENVIRONMENTAL SITE ASSESSMENT REPORT
OLD CHAMPLAIN MILL SITE

TABLE OF CONTENTS

Page

1.0 INTRODUCTION 1

2.0 SITE DESCRIPTION 2

2.1 Site Location 2
2.2 Property/Business Owner 2
2.3 Current Site Uses 2
2.4 Former/Historic Site Uses 2
2.5 Total Site Area and Topographic Description 2
2.6 Site Geology 3
2.7 Nearby Surface Water Bodies and Water Supply Wells 3
2.8 Site Buildings and Structures 3
2.9 Roadways or Driveways on or Adjoining the Site 4
2.10 Rights-of-Way and/or Easements (On-Site and Adjacent) 4
2.11 Surrounding Land Uses 4

3.0 SITE AND SURROUNDING AREA HISTORIC AND RECORDS REVIEW 5

3.1 Ownership Information 5
3.2 Sanborn Fire Insurance Maps 5
3.3 Aerial Photographs 5
3.4 Information From the Local Historian 6
3.5 Information From Health Department Official(s) 6
3.6 Information From Other Local Official(s) 6
3.7 Information From Current or Former Property Owner(s) 6
3.8 Summary of Previous Environmental Assessments 8
3.9 ASTM Federal and State Database Review 8

PHASE I
ENVIRONMENTAL SITE ASSESSMENT REPORT
OLD CHAMPLAIN MILL SITE

TABLE OF CONTENTS

Page

4.0 SITE VISIT 13

4.1 Conditions of the Visit 13
4.2 Uses of Site Buildings and Structures 14
4.3 Site Utilities 14
4.4 Transformers/Capacitors (Liquid Filled Only) 14
4.5 Asbestos Containing Materials (ACM) 15
4.6 Site Surface Water Bodies/Areas 15
4.7 Site Drainage 15
4.8 Site Waste Profile 16
4.9 Underground (UG) and/or Above Ground (AG) Storage Tanks 18
4.10 Observed Evidence of Potential or Known Site Contamination 19

5.0 FINDINGS, OPINION AND CONCLUSIONS 20

5.1 Findings 20
5.2 Opinion 21
5.3 Conclusions 23

APPENDICES

APPENDIX A: Figures/Maps

APPENDIX B: Site Visit Photographs

APPENDIX C: References and Records of Communication

APPENDIX D: Environmental Database Report

APPENDIX E: Sampling Results and Information Pertaining to the Poultney Street Hazardous Waste Facility

1.0 INTRODUCTION

This report presents the findings of a Phase I Environmental Site Assessment conducted at the Old Champlain Mill Site which is located in the Village of Whitehall, Washington County, New York.

The purpose of this site assessment was to reasonably identify recognized environmental conditions. A recognized environmental condition is defined as the presence or likely presence of hazardous substances or petroleum products on a property under conditions that indicate an existing release, a past release, or a material threat of a release. The finding of no recognized environmental conditions is not a warranty or guarantee that the site remains free from contamination. This environmental site assessment is designed to reduce, but not eliminate, uncertainty within reasonable limits of time and cost.

This assessment is being completed to provide the innocent landowner defense to Old Champlain Mill, Inc., which intends to subdivide and sell and/or lease the subject property.

The site assessment included a site visit/observation, a review of existing documents and environmental lists, and background research on the previous uses and practices at the subject site as reported and documented by site contacts and Local, State and County officials known to be responsible for regulating and enforcing site area environmental conditions. This site assessment has been performed in general conformance with the scope and limitations as outlined in ASTM E 1527-00, Standard Practice for Environmental Site Assessments: Phase I Environmental Site Assessment Process.

This site assessment did not include a review of non-scope issues as identified by ASTM E 1527 with the exception of asbestos containing materials.

This site assessment was conducted by C.T. Male Associates, P.C. (C.T. Male) as requested by Mr. John McMahon, attorney for George Story of Old Champlain Mill, Inc. in Gansevoort, New York. Mr. Story was the site contact for this assessment.

2.0 SITE DESCRIPTION

2.1 Site Location

The subject site is located at 16-50 Poultney Street (US Route 4) in the Village of Whitehall, Washington County, New York. The site is located on the south side of Poultney Street and was identified on the Village of Whitehall tax maps as being within the parcel with section 60.6, block 1 and lot 5. A site location map is included in Appendix A as Figure 1. A map showing the site property boundaries is included in Appendix A as Figure 2.

2.2 Property/Business Owner

According to assessment records, the current property owner is Old Champlain Mill, Inc. of Gansevoort, New York.

2.3 Current Site Uses

The site building is currently unoccupied and has reportedly been unoccupied for approximately one year.

2.4 Former/Historic Site Uses

The site was reportedly developed in 1925 as a silk mill. The site was used for this purposes until 1959 at which point the building was used to manufacture newspaper vending machines. The site was used for this purpose until approximately one year ago.

2.5 Total Site Area and Topographic Description

The subject site incorporates approximately 11.49 acres of fairly level land, though the adjoining Poultney Street roadway to the north of the site sits at an elevation higher than that of the subject site. According to the United States Geological Survey (USGS) Topographic Map, the subject site lies at approximately 130 feet above Mean Sea Level.

2.6 Site Geology

Soils are mapped by the Washington Soil Survey as Limerick silt loam with a small area of Saco silt loam. The Limerick series consists of deep, poorly drained medium-textured soils formed in alluvial deposits of silt and very fine sand. They are nearly level and are found in low areas on flood plains. The Saco series consists of deep, very poorly drained medium textured soils formed in silty alluvial sediments. They are nearly level and are in low areas on flood plains that are subject to frequent flooding. Surficial geology is mapped as lacustrine silt and clay. These soils consist of laminated silts and clays which are generally calcareous, with low permeability and potential land instability. They range in thickness up to 50 meters.

The water table at the subject site is reported to be within 1-2 feet of the ground surface.

2.7 Nearby Surface Water Bodies and Water Supply Wells

The surrounding area is reportedly supplied with municipal water from the Village of Whitehall.

The Champlain Canal borders the site to the west and Wood Creek borders the site to the east.

2.8 Site Buildings and Structures

The main site building is a one story brick structure which was reportedly constructed in 1925. The building occupies approximately 120,000 square feet and is "T" shaped orientated to the east. The building is constructed on a slab foundation and no basement area is present. A one story brick power house building is located to the south of the main site building. The power house was also reportedly constructed in 1925 and formerly housed the boiler for the main site building. A brick smoke stack lies to the south of the power house. The power house occupies approximately 5,000 square feet.

2.9 Roadways or Driveways on or Adjoining the Site

A paved driveway enters the site from Poultney Street on the eastern portion of the site. The driveway leads to a paved parking area located north of the site building. A gravel driveway exists the west side of the parking area which continues along the west, south and east sides of the site building. A gravel parking area exists on the east side of the main site building.

2.10 Rights-of-Way and/or Easements (On-Site and Adjacent)

Several easements and rights-of-way are reported to exist for the site. A municipal sewage pump station is located on the southeastern portion of the site and earthen which are reportedly maintained by the Village of Whitehall lie along the eastern and western portions of the site dikes to control flooding. Other easements consist of utility easements and rights-of-way.

2.11 Surrounding Land Uses

The surrounding land uses, as identified during the site visit, are described as follows:

North - Poultney Street lies north of the site. Martell's Auto, Top Dogs food stand and Express Rental lie north of Poulney Street. An apparently abandoned petroleum tank farm lies to the northwest of the site across from the Champlain Canal and residential properties lie to the northeast of the site across from Wood Creek.

West - The Champlain Canal lies west of the site. Vacant wooded land and River Side Drive lie west of the Champlain Canal.

East - Wood Creek lies east of the site. A Stewart's convenience store and gasoline station, S & S Auto Sales and residential properties lies east of Wood Creek.

South - Lands of the Claredon and Pittsford Railroad Company lies south of the site. A portion of this adjacent property is considered a hazardous waste facility, which lies immediately adjacent to the south side of the site.

3.0 SITE AND SURROUNDING AREA HISTORIC AND RECORDS REVIEW

3.1 Ownership Information

An affidavit of title was provided for the subject site. According to the affidavit, the site was transferred from Champlain Spinners, Inc. to W.M.P. Realties, Inc. in 1959. The affidavit further indicates a certificate of consolidation was filed in 1972 consolidating EB Metal Products Co., Inc., Whitehall Metal Products, Inc., Omega Tool and Stamping Company, Inc. and W.M.P. Realties, Inc. forming EB Metal and Rubber Industries, Inc. EB Metal and Rubber Industries, Inc. was changed to EB Metal Industries, Inc., in 1979.

Old Champlain Mill, Inc. reportedly acquired the site in July 2001 at the Washington County tax sale auction. EB Metal Industries, Inc. was reportedly the owner prior to the tax auction.

No environmental liens or activity/land or use limitations are reported by the site contact to exist for the site.

3.2 Sanborn Fire Insurance Maps

Sanborn Fire Insurance Maps do not provide coverage of the subject site. The 1955 index map for Whitehall indicates the site was occupied by Champlain Spinners, Inc., Plant No. 2, however, specific coverage of the site is not provided. The index map is included in Appendix A as Figure 3.

3.3 Aerial Photographs

Aerial photographs were reviewed for the years 1942, 1981, 1991, 1992 and 1994 at the New York State Department of Transportation, Map Information Unit. Throughout these years the site layout appeared to be similar to the current layout, improved with the main site building and the power house. Original quality copies of the aerial photographs reviewed at the New York State Department of Transportation, Map Information Unit could not be obtained at the time of this report.

3.4 Information From the Local Historian

The Village of Whitehall Historian provided a document which indicates the subject site was used from 1932 to 1951 as a silk mill.

3.5 Information From Health Department Official(s)

A Freedom of Information Law (FOIL) request was submitted to the New York State Department of Health, Glens Falls District Office to determine if the Department of Health has records concerning soil or groundwater contamination for the subject site. At the time of this report a response had not been received from the Department of Health. If pertinent information is received, it will be forwarded upon receipt.

3.6 Information From Other Local Official(s)

The Village of Whitehall Department of Public Works reported that municipal water and sanitary sewer service were not available to the subject site until the mid 1970s.

A FOIL request was submitted to the Village of Whitehall Fire Department to determine if the Fire Department has records concerning spills, major fires or hazardous materials for the subject site. At the time of this report a response had not been received from the Fire Department. If pertinent information is received, it will be forwarded upon receipt.

Property assessment cards were reviewed from the Town of Whitehall Assessor's Office. Pertinent information from the assessment cards is included in the appropriate sections of this report.

Written correspondence from municipal officials is included in Appendix C.

3.7 Information From Current or Former Property Owner(s)

Mr. George Story of Champlain Mill, Inc., the current owner of the site, was the site contact and was interviewed during a telephone conversation prior to the site visit. Mr. Story also provided a tour of the site buildings and grounds.

A former employee of EB Metal Industries, Inc., Mr. Ron Roberts, was interviewed during a telephone conversation following the site visit. Mr. Roberts reported that

EB Metals utilized the site as a sheet metal fabrication shop which included a painting process to produce newspaper vending machines. Mr. Roberts offered the following information:

Paints used at the site were initially solvent based paints. These paints became obsolete and were replaced with powder paints. The solvent based paints were stored in the power house once they became obsolete. Medium grade solvents were also used on the site.

No underground storage tanks were located on the site due to the high water table. A 10,000 gallon above ground fuel oil tank was previously located on the site. The tank was decommissioned and removed from the site. The power house housed a fuel oil boiler which was dismantled in the 1970s.

Appurtenances located on the exterior of the site buildings are reported to be hydrants, dry hydrants and sprinkler shut-offs.

The site flooded several times including a significant flood in the mid 1980s. This flood was caused by work being completed by the New York State Department of Transportation on a coffer dam. The flood resulted in contamination by solvents on the subject site property. Soil borings and/or monitoring wells were reportedly installed on the site following the flood, but were removed in the late 1980s.

A pile of scrap metal noted on the southeastern portion of the site is reported to be cigarette vending machines damaged during the flood as well as empty drums.

Prior to connecting to the municipal sewer system, drainage from the site was to both the Champlain Canal and to Wood Creek. Floor drains within portions of the site were reportedly used to collect steam condensation and returned to the power house.

EB Metal Industries role in the hazardous waste facility located immediately adjacent to the site was limited. Drums which were burned and/or dumped on this adjoining property were from an off-site source and did not originate from EB Metals. EB Metals role in the hazardous waste facility was limited, and they settled with the state.

3.8 Summary of Previous Environmental Assessments

No previous environmental site assessments are reported to have been conducted for the subject site.

3.9 ASTM Federal and State Database Review

Federal and state environmental databases were reviewed in accordance with ASTM E-1527 Standards to determine if the site or nearby surrounding properties are listed on these databases. The databases were searched for the areas within the ASTM recommended search distance, unless otherwise noted. Reviewed databases are listed below. A copy of the database report is included in Appendix D.

3.9.1 Federal National Priorities List (NPL) Facilities

The subject site was not identified as a NPL hazardous waste facility. No NPL facilities were identified within one mile of the subject site.

3.9.2 Federal CERCLA Hazardous Waste Facility List

The subject site was not identified as a CERCLA hazardous waste facility. No CERCLA hazardous waste facilities were identified within ½ mile of the subject site.

3.9.3 Federal Resource Conservation and Recovery Act (RCRA) Treatment, Storage and Disposal (TSD) Facilities List

The subject site was not identified as a RCRA TSD facility. No RCRA TSD facilities were identified within ½ mile of the subject site.

3.9.4 Federal RCRA Generators List and Corrective Action List

The subject site was identified on the RCRA generator list under the name EB Metal Industries, Inc., the former tenant of the site, with RCRA generator No. NYD001945039. The site is listed as a large quantity generator. No violations are listed for the site.

The following immediately adjoining properties were identified as RCRA generator facilities:

- NYD987023009, NYSDOT BIN 4001130, Route 4 over Champlain Canal, located northwest of the site
- NYD013385075, Service Station, 45 Poultney Street, located north of the site
- NYD982538118, NYSDEC Barrel Site, US Route 4, located south of the site (this facility was not geo-coded by the database company and is believed to be associated with the hazardous waste site as discussed in section 3.9.6.)
- NYD982790636, NYSDOT BIN 1001140, Route 4 over Wood Creek, located northeast of the site.

No violations are listed for these facilities.

The subject site was not identified as a RCRA corrective action facility. No RCRA corrective action facilities were identified within one mile of the subject site.

3.9.5 Federal Emergency Response Notification System (ERNS) List

The subject site was identified on the ERNS list. According to the ERNS report 150 gallons of a chemical mixture were released to a drain which discharged to the canal. A spill for this incident is also listed with the New York State Department of Environmental Conservation (NYSDEC).

3.9.6 State Hazardous Waste Facility List

One State hazardous waste site was identified within one mile of the subject site. The site is listed for the address of the subject site (16/50 Poultney Street) and is referred to as the Poultney Street Site. This hazardous waste facility is located along the railroad bed just south of the subject site. The facility is classified as a Class 2 facility, defined as a facility which poses a significant threat to the public health or environment and requires action. The facility consisted of a dump area and a former fire training area. Drums of acetone, trichloroethene, polycyclic aromatic hydrocarbons, phthalates, benzene, toluene, ethylbenzene and xylene were reportedly brought onto the facility from various sources.

One monitoring well (identified as MW-4) exists on the subject site, just north of the hazardous waste site. The monitoring well was reportedly installed to delineate the

magnitude and extent of the contaminant plume emanating from the hazardous waste facility and to assess if the plume had migrated downgradient beyond the hazardous waste facility property limits.

URS Corporation conducted a sampling event on June 17, 2002 which included the sampling and analysis of surface soil, subsurface soil and groundwater from MW-4. The results from the sampling event for the surface and subsurface soils are included in Appendix E. Based on the letter from URS to the site owner, the groundwater sample from MW-4 did not contain volatile organic compound contamination.

3.9.7 State Solid Waste Facility List

The subject site was not identified on the State solid waste facility list. No State listed solid waste facilities were identified within ½ mile of the subject site.

3.9.8 State Petroleum Bulk Storage (PBS) Tank Facilities

The site was identified on the State PBS facilities list. Two PBS registrations were identified for the site, both under the name EB Metal Industries, Inc. PBS No. 5-489220 is listed as "administratively closed". Two above ground fuel oil storage tanks are listed as being closed. The first tank is listed as a 10,000 gallon tank which was installed in 1966 and closed prior to April 1991 either in place or removed. The second tank is listed as a 4,000 gallon tank listed as administratively closed.

PBS No. 5-490563 is listed as an active PBS facility with one active 4,000 gallon above ground fuel oil storage tank and one removed 10,000 gallon above ground fuel oil storage tank.

The following immediately adjoining properties were identified on the State PBS facilities list:

- PBS No. 5-022802, Martell's Auto Service, 45 West Poultney Street, located north of the site. This facility is currently unregulated. Five underground storage tanks were closed by removal at this facility in 1999.
- PBS No. 5-227951, Stewarts Ice Cream Company, 60 Poultney Street, located east of the site. Three active tanks are listed for this facility. Two underground tanks are listed as having been closed prior to 1991.

3.9.9 State Leaking Storage Tanks List

The site was not identified on the state leaking storage tank list. Nineteen leaking storage tank incidents were identified within ½ mile of the site. Of the nineteen, three are located adjacent to the subject site. Two of these incidents are listed for Martell's Auto located north of the site. One of these incidents is listed as active. According to the spill fact sheet for this incident, considerable subsurface soil and groundwater contamination was found during a tank removal activity at the facility.

The other adjacent leaking tank incident is listed for Stewart's which is located to the east of Wood Creek. Since this incident and the remaining leaking tank incidents are located either east of Wood Creek or west of the Champlain Canal, impacts to the quality of soils or groundwater at the site are not anticipated as a result of these leaking tank incidents.

3.9.10 Applicable State Lists

The New York State Department of Environmental Conservation (NYSDEC) spills database was reviewed to determine if spills have occurred at the subject site or adjoining parcels. Three spills are listed for the subject site.

Spill No. 9205797 reportedly involved the release of 150 gallons of a stripping agent. The spill fact sheet does not include many details concerning the spill, but does indicate that the NYSDEC was to inspect the site with particular attention paid to the stripping area where chemicals would overflow into the grates. The spill was issued a closed status on August 21, 1992, three days following the day the spill was reported.

Spill No. 9514114 was reported on February 6, 1996 due to possible deliberate dumping. According to the spill fact sheet, the site was inspected and no issues were noted. The spill was issued a closed status on November 14, 1996.

Spill No. 89003064 was reported on June 21, 1989 due to a landfill area which contained leaking drums and piping which lead to an oily pit and a tar pit. According to the spill fact sheet, the spill was turned over to the Division of Hazardous Waste Remediation. It appears that this spill was the initial reporting of the hazardous waste facility as discussed in section 3.9.6.

The following spills were identified for the immediately adjoining parcels:

9707351, Martell's Service Center/Mobil located north of the site. According to the spill report the facility collected junk cars and deliberately dumped spent solvents on the ground. This spill was issued a closed status on July 11, 2000, though the rational for closing the spill is not provided.

9206439, Route 4 @ Canal west of the site. According to the spill fact sheet, diesel contamination was found while test borings were being completed for construction purposes. The spill was issued a closed status on November 2, 1998 with the notation that the file was inactive for four years.

Both of the above spills are indicated as not meeting NYSDEC standards.

4.0 SITE VISIT

4.1 Conditions of the Visit

4.1.1 Site Contact(s)

Mr. George Story of Old Champlain Mill, Inc. was the site contact and was present during the site visit.

4.1.2 Date of Visit

The site visit was conducted on Thursday, June 13, 2002 by Ms. Aimee Gates of C.T. Male Associates, P.C. During the site visit the weather was approximately 75°F with sunny skies.

4.1.3 Ground Cover

The main site building is situated near the center of the subject site. To the north of the building is a paved parking area and driveway, limited lawn area and a marsh area is located along Poultney Street. A gravel parking area is located east of the building and a heavily wooded area is located southeast of the site building. Lawn areas and the gravel driveway are situated south of the building and grassy areas and the gravel driveway are situated west of the site building. Areas along side the edge of the building were overgrown with brush.

4.1.4 Areas Observed

The site and surrounding areas were observed from Poultney Street and the approximate site boundaries. The central portions of the site were traversed and the interiors of the site buildings were observed. Observation of portions of the site were limited due to heavy vegetation including the fenced area surrounding the capacitor, along the southern portion of the main site building and on the southeastern portion of the site. Photographs taken during the site visit are included in Appendix B.

4.2 Uses of Site Buildings and Structures

The site building is currently unoccupied. It is reported that the northeastern portion of the building was used as office space and the remainder of the eastern portion of the building was used for manufacturing. A paint assembly and washing area occupied the central portion of the building with the warehouse occupying the western portion of the building. The power house reportedly housed the boiler at one time and appears to have been used in recent years for the storage of obsolete materials and trash.

4.3 Site Utilities

Electricity is supplied to the site by Niagara Mohawk Power Corporation. Municipal water and sewer service are provided by the Village of Whitehall. The site building is heated with ceiling mounted fuel oil fired furnaces.

The site reportedly relied on a private drilled well prior to the availability of municipal water in the site area. The well was identified at the western end of the north side of the site building.

4.4 Transformers/Capacitors (Liquid Filled Only)

Three pad mounted older style transformers were identified in the southeastern exterior corner of the site building. No PCB labeling was noted on the transformers. No staining was noted on the concrete pad beneath the transformers.

Several pole mounted transformers were identified on the site during the site visit. They include two single pole mounted transformers and a set of three pole mounted transformers on the northern portion of the site along Poultney Street. These transformers appeared to have a Non-PCB label and no evidence of leakage was noted from the transformers.

Two sets of three pole mounted transformers were identified to the north and south of the main site building. No PCB related labeling was noted on the transformers. No evidence of leakage was noted from the transformers.

A capacitor was identified to the east of the pole mounted transformers noted on the north side of the site building within a fenced area. No PCB related labeling was noted on the capacitor. No evidence of leakage was noted from the capacitor.

Other potential liquid containing equipment on the site includes a casting machine located in the central portion of the site building, a punch press in the eastern portion of the site building and several smaller motors located along the southern exterior wall of the main site building. Most of the equipment from the site was reportedly recently removed.

Additionally, fluorescent light fixtures were noted throughout the building. The ballasts within these fixtures have the potential to contain PCBs.

4.5 Asbestos Containing Materials (ACM)

Suspect asbestos containing materials were identified in the forms of pipe insulation, floor tile, mastic and ceiling tile within the main site building and pipe insulation within the power house. Roofing materials are also a suspect asbestos containing materials. These materials appeared to be in poor condition. Based on the age of the site buildings (constructed prior to 1985) other building materials may contain asbestos. An asbestos survey was not conducted as a function of this assessment.

4.6 Site Surface Water Bodies/Areas

The Champlain Canal borders the site to the west and Wood Creek borders the site to the east. Marsh areas were noted to the north of the site building and on the southeastern portion of the site.

4.7 Site Drainage

4.7.1 Site Catch Basins and Discharge Location(s)

Catch basins style floor drains were identified within the manufacturing portion of the main site building. Some of the basins were covered with metal and/or wood at the time of the site visit. Floor drains within the building are discussed below. No catch basins were identified on the exterior of the site during the site visit.

4.7.2 Building Floor Drains and Discharge Location(s)

Floor drains were identified throughout the eastern and central portions of the main site building. A former potential floor drain was also identified within the power house. According to a former employee of the site, some of the floor drains were used to return condensate to the power house. Other floor drains were reportedly connected to the municipal sewer system. The floor drains reportedly previously discharged to Wood Creek and the Champlain Canal and may have discharged to subsurface disposal features. The actual discharge points for the drains were not confirmed and no drawings of the various systems were made available for review.

4.7.3 Dry Wells and Sumps

Several pipes were observed exiting the exterior walls of the north and south sides of the main site building. On the north side of the site building several pipes were observed which appeared to drain to a brick lined pit located adjacent to the building. Pipes below ground level were also observed exiting and entering the pit. It is not known if this pit represents a dry well, or if other pipes which exited the building drained to on-site dry wells.

No sumps were identified on the site during the site visit. According to the site contact, no sumps are located on the site.

4.8 Site Waste Profile

4.8.1 Solid Wastes/General Trash (Generation/Storage/Disposal)

No solid wastes are currently generated on the site. Piles of waste materials were identified within and outside of the site building. These materials included bins containing empty containers, scrap metal and trash.

4.8.2 Sludges (Generation/Storage/Disposal)

No sludge wastes were identified on the site during the site visit. According to the site contact, no sludges are currently generated, stored or disposed of on the site. Wastes which may have been considered sludges are discussed in section 4.8.7.

4.8.3 Liquids (Generation/Storage/Disposal)

Various liquids appear to have been used and stored on the subject site. These liquids appeared to be stored in various size containers and drums, which are discussed in section 4.8.7.

4.8.4 Waste Water Discharge(s)

Waste water discharges were reportedly generated from a five stage washing system prior to the metal components being painted. The waste water was reportedly flushed to the sewer, although some drums within the site building were labeled as containing waste water. Prior to connection to the municipal sewer, these discharges may have been to the canal located west of the site or to the creek located east of the site, or potentially to subsurface disposal features. According to the site contact, no waste water is currently generated on the site.

4.8.5 Waste Lagoons or Disposal Pits (Current and Historic)

No waste lagoons or disposal pits were identified on the site during the site visit. According to the site contact, no current or historic waste lagoons or disposal pits are located on the site.

4.8.6 On-site Septic Systems

No septic systems were identified on the site during the site visit. The site is reportedly connected to the Village of Whitehall municipal sewer system. Prior to connection to the municipal sewer system, drainage from the site is reported to have been to the canal on the west side of the site and to the creek on the east side of the site. Since the site was developed in the 1920s and municipal sewer was not available until the 1970s, there is a potential that former septic systems were previously used on the site.

4.8.7 Waste Drums/Containers

Numerous drums and containers of waste were identified on the site during the site visit. These materials were reportedly left behind by the former site owner. The drums of wastes include flammable solids, waste oil, waste water, waste solvent and

waste paint. The current property owner estimates there are approximately 1,000, one to five gallon containers of paint on the site. Numerous empty drums and containers and partially full containers and drums were noted throughout the site, both inside and outside of the site buildings. A majority of the drums and containers are stored within the power house and within a room in the northwestern portion of the main site building. Due to the volume of containers and drums, an inventory was not taken. It appears there are in excess of fifty (50) fifty-five gallon drums which are full of product and many others which may be partially full or empty. In addition to the estimated 1,000 smaller containers of paint, there are other containers of oils, lacquers, cleaners, spent paint and other various materials as well as partially full and empty containers. The current owner is using several drums and containers to contain water from the leaking roof.

Other drums left within the building which are no longer being used include several drums of a detergent used to clean the metals prior to painting and drums containing powdered paint.

Staining was noted in several areas of the site building including the drum storage areas, and evidence of leakage was noted from some of the drums and containers.

4.8.8 Raw Product Drums/Containers

No drums of raw product were identified on the site during the site visit. For the purpose of this report, the drums and containers noted during the site visit are considered to be waste materials.

4.9 Underground (UG) and/or Above Ground (AG) Storage Tanks

A 4,000 gallon above ground storage tank is located to the south side of the site building. The tank is reportedly empty and is contained within a metal dike.

According to the site contact, no underground storage tanks are located on the site.

Three above ground propane storage tanks are located on the south side of the main site building. The propane tanks were reportedly used for the painting operation.

4.10 Observed Evidence of Potential or Known Site Contamination

4.10.1 Evidence of Soil Contamination/Liquid Discharges

Evidence of liquid discharges was identified in various locations throughout the site buildings in the form of staining, primarily surrounding drums and containers. Staining was also noted on the floor surface near some of the remaining equipment.

4.10.2 Soil or Surface Disturbances

Earthen dikes are present along the eastern and western portions of the property used to control flooding from the Champlain Canal and Wood Creek. The dikes were reportedly originally developed in the 1930s and were enhanced in the mid 1980s after a flood event.

A soil mound was noted to the south of the power house. The source of the soil is not known.

4.10.3 Evidence of Waste Deposits (Piles/Pits/Landfills/Lagoons)

The waste deposits identified on the site generally appeared to consist of industrial related debris including scrap metal, motors, equipment and empty drums & containers. The waste deposits were identified both within and outside the site buildings. A waste pile which appeared to consist primarily of metal and drums was identified within the wooded area on the southeastern portion of the site during the site visit.

5.0 FINDINGS, OPINION AND CONCLUSIONS

5.1 Findings

The subject site has been used for manufacturing purposes since the late 1920s or early 1930s. The mill was reportedly originally used to manufacture silk, and since 1959 to manufacture metal vending machines.

The site was identified on several environmental databases and lists. Two Petroleum Bulk Storage Registrations were identified for the site. Additionally, three spills with the New York State Department of Environmental Conservation and one emergency response notification system (ERNS) report and were identified for the site. The site was also identified as a RCRA generator.

Several other facilities were identified on the environmental databases and lists within the specified search radii. These include two facilities immediately adjoining the site, one to the north which was identified as a RCRA generator, an active leaking tank incident and as having a spill; and one to the south of the site which is an active hazardous waste facility.

Numerous drums and containers were identified on the subject site (in excess of 1,000) which range from empty to full. Some of these drums were designated wastes at the time EB Metals occupied the site, others are currently considered waste materials as they are no longer used. Staining and evidence of leakage was noted from some of these containers and drums.

Several floor drains were noted throughout the manufacturing portion of the main site building and possible previous floor drains were noted within the power house. Several outlet pipes were identified along the southern and northern exterior walls of the site building. A potential dry well was noted on the north side of the site building. Additionally, it is reported that municipal sewer was not available to the subject site until 1976.

A flood reportedly occurred at the subject site in the mid 1980s. According to a previous employee of EB Metals, the flood resulted in contamination of groundwater at the site.

Liquid filled electrical and manufacturing equipment was identified on the site. This liquid filled equipment includes three older style pad mounted transformers, pole mounted transformers, a capacitor and various manufacturing equipment.

Piles of debris were noted both inside and outside of the site buildings. In addition to the drums noted above, scrap metal, wood and general trash were noted on the site.

Surface disturbances were noted on the site during the site visit including two earthen dikes along the east and west sides of the site and a soil mound near the power house. The dikes were reportedly originally constructed in the 1930s and enhanced in the 1980s.

Suspect asbestos containing materials were identified in the forms of pipe insulation, floor tile, mastic, ceiling tile and roofing materials. These materials appeared to be in poor condition.

5.2 Opinion

It is our opinion that the information and data collected during this Phase I ESA indicates the presence or likely presence of hazardous substances or petroleum product within the site under conditions which indicate an existing release, past release or material threat of a release.

It is our opinion that since the subject site has been used for manufacturing purposes for a number of years and documentation concerning the storage and disposal practices is not available for the length of time that the facility has been in operation, there is a potential that materials were disposed of on the subject site. These methods may have included disposal to on-site disposal features such as septic systems, leach fields or dry wells since municipal sewer was not available to the site until 1976. Former drainage may have included discharges into the Champlain Canal and Wood Creek. It is our opinion that there is a potential for sediments within these water bodies to have been impacted.

Although closure status was issued to the spills associated with the subject site, these spills are indications that materials may have been mismanaged while the site was in

operation. Limited information is provided within the spill fact sheets and therefore the basis of the closure status of these spills is not known.

It is our opinion that the numerous drums and containers present on the site represent a potential liability. Some of the drums and containers appeared to have leaked or spilled. If any of the materials are defined as hazardous wastes, they must be removed from the site for proper disposal within 90 days of such designation. It is our opinion that the remaining drums and containers also be removed from the site for proper disposal in a timely manner.

In addition to the numerous drums and containers noted on the site, several piles of garbage consisting of general trash, wood and metal were noted both in and outside of the building. It is our opinion that these materials, not including liquid filled equipment, drums and containers, do not appear to be a source of soil or groundwater contamination. However, these materials should be removed from the site for proper disposal.

Fill materials appear to have been brought onto the subject site from off-site sources. Since these sources cannot be confirmed, it is our opinion that these is a potential that these materials are not clean fill materials.

It is our opinion that since the site has been impacted by several floods, possibly dating to the 1930s, coupled with use and storage of various chemicals on the site, that these conditions have had the potential to impact soil or groundwater at the site.

It is our opinion that based on the age of the site building, there is a potential for asbestos to be found in building materials. The suspect asbestos containing materials identified include but are not limited to floor tile, mastic, ceiling tile, roofing materials and pipe insulation. These materials appeared to be in poor condition.

It is our opinion that the remaining equipment located on the site including the transformers, capacitors, light ballasts and machinery, has the potential to contain Poly-Chlorinated Biphenyls (PCBs).

It is our opinion that there is a potential for contamination from off-site sources including the neighboring garage and previous gasoline station to the north and the hazardous waste facility to the south.

It is our opinion that the Petroleum Bulk Storage registration for the site be changed to indicate the new ownership of the 4,000 gallon tank. If the tank is no longer to be used, the registration should be changed to reflect this.

5.3 Conclusions

C.T. Male has completed a Phase I Environmental Site Assessment for the Old Champlain Mill Site in general conformance with the scope and limitations of ASTM Practice E 1527. This assessment has revealed no evidence of recognized environmental conditions in connection with the property except for the following:

The site has been used for manufacturing purposes since the late 1920s or early 1930s. Based on available information, it appears that the site used, stored and potentially disposed of chemical materials on the site. Municipal sewer was reportedly not available to the site until the mid 1970s. Prior to connection to the municipal sewer, drainage was reportedly to Wood Creek and to the Champlain Canal. Other disposal methods may have included septic systems, leach fields or dry wells. Evidence of a potential dry well was noted on the north side of the site building. Several floor drains were noted within the site building. Further assessment would be necessary to determine if the former industrial use of the site has had an impact to the quality of soils, groundwater or sediments at the site. The former use of subsurface disposal features including the former discharge location of the floor drains should be verified.

Numerous drums and containers were identified on the site. These materials include waste solvents, solvent based paints, powdered paints, spent paints, waste oils, lacquers, waste water and other materials. Staining was noted on the floor surface near some of these drums and containers, in particular in the drum storage room in the northwestern portion of the main site building and throughout the power house. Further assessment would be necessary to determine if the use, storage and potential disposal of these materials has had an impact to the quality of soils or groundwater at the site. Further assessment would be necessary to verify that the drums noted within the debris piles located on the site, in particular the pile located on the southeastern portion of the site, were empty at the time of disposal.

The subject site has reportedly been impacted by several floods, possibly dating to the 1930s. According to a previous employee of the site, a flood which occurred in

the 1980s impacted groundwater at the site. Further assessment would be necessary to determine if the historical floods at the site have impacted the quality of soils or groundwater at the site.

Potential PCB containing equipment was identified on the subject site. Further assessment would be necessary to determine if the transformers, capacitor or remaining manufacturing equipment contain PCBs.

The site is bound to the south by a confirmed hazardous waste disposal facility. This facility appears to be immediately adjacent to the subject site. A groundwater monitoring well was installed on the subject site as a down-gradient monitoring point for the hazardous waste facility. A former gasoline station borders the site to the north on the opposite side of Poultney Street. An active leaking storage tank incident is listed for this facility. Further assessment would be necessary to determine if these off-site sources have had an impact to the quality of soils or groundwater at the site. This assessment may include reviewing files at the New York State Department of Environmental Conservation.

Suspect asbestos containing materials were identified on the site during the site visit in the forms of floor tile, mastic, ceiling tile, pipe insulation and roofing materials. If these or other building materials contain asbestos, they should be managed in accordance with applicable New York State Department of Labor and Federal OSHA laws and regulations.

Fill materials from unknown sources appear to have been utilized at the subject site. Further assessment of these materials would be necessary to determine if the presence of the fill materials has had an impact to the quality of soils or groundwater at the site.

The information presented in this report is limited to the investigation conducted as described in the referenced ASTM guidelines for conducting environmental site assessments, and is not necessarily all inclusive of conditions present at the subject site. Due to inherent limits of time and cost, uncertainty about site conditions remains. If you have any questions regarding this report, please contact this office at (518) 786-7400.

Respectfully submitted,

C.T. MALE ASSOCIATES, P.C.

DRAFT

Aimee Gates
Environmental Scientist

Reviewed and approved by:

DRAFT

Kirk Moline
Project Manager

asg
CTMA Project No. 02.8340
June 28, 2002

EXHIBIT 3

2006 C.T. MALE PHASE II ESA

December 22, 2006

Phase II Environmental Site Assessment Old Champlain Mill 16-50 Poultney Street Village of Whitehall Washington County, New York

Prepared for:

DONNELLY INDUSTRIES, INC.
26 N. Center Street
Orange, New Jersey 07050

Prepared by:

C.T. MALE ASSOCIATES, P.C.
50 Century Hill Drive
P.O. Box 727
Latham, New York 12110
(518) 786-7400
FAX (518) 786-7299

C.T. Male Project No: 06.6448

Unauthorized alteration or addition to this document is a violation of Section 7209 Subdivision 2 of the New York State Education Law.

© Copyright 2006
C.T. MALE ASSOCIATES, P.C.

PHASE II
ENVIRONMENTAL SITE ASSESSMENT REPORT
OLD CHAMPLAIN MILL

1.0 INTRODUCTION 1

2.0 METHOD OF INVESTIGATION 2

2.1 Test Boring and Monitoring Well Locations 2
2.2 Drilling Method and Well Construction 3
2.3 Soil Screening and Sampling 4
2.4 Decontamination 4
2.5 Surface Water Sampling 4

3.0 FINDINGS 4

3.1 Soil Conditions 4
3.2 Soil Screening Results 6
3.3 Groundwater Conditions 7
3.4 Surface Water Conditions 7

4.0 ANALYTICAL RESULTS 7

4.1 Surface Water 7
4.2 Groundwater Within Monitoring Wells 7
4.3 Comparison of Results with the Adjoining Hazardous Waste Facility 10

5.0 CONCLUSIONS AND RECOMMENDATIONS 11

APPENDICES

APPENDIX A: Figures/Maps

APPENDIX B: Subsurface Exploration Logs and Monitoring Well Construction Logs

APPENDIX C: Organic Vapor Headspace Analysis Logs

APPENDIX D: Laboratory Analysis Report

1.0 INTRODUCTION

This report presents the findings of a Phase II Environmental Site Assessment conducted at the Old Champlain Mill Site, which is located in the Village of Whitehall, Washington County, New York. A site location map is included in Appendix A as Figure 1.

The scope of the subsurface assessment was developed on the basis of the information and data gathered and evaluated as presented in the Phase I Environmental Site Assessment (ESA), dated August 8, 2006. The Phase I ESA identified the following recognized environmental conditions for the site:

- The site has been used for manufacturing purposes since 1916. Based on available information, it appears that the site used, stored and potentially disposed of chemical materials on the site. Municipal sewer was reportedly not available to the site until the mid 1970s. Prior to connection to the municipal sewer, discharge was reportedly to Wood Creek and to the Champlain Canal. Other disposal methods may have included septic systems, leach fields or dry wells.

- Various chemicals and petroleum products were previously used, stored and potentially disposed of on the site. Drums were noted within the debris piles located on the site.

- The subject site has reportedly been impacted by several floods, possibly dating to the 1930s. According to a previous employee of the site, a flood which occurred in the 1980s impacted groundwater at the site.

- The site is bound to the south by a confirmed hazardous waste disposal facility. This facility appears to be immediately adjacent to the subject site. A groundwater monitoring well was installed on the subject site as a down-gradient monitoring point for the hazardous waste facility. A former gasoline station borders the site to the north on the opposite side of Poultney Street. An active leaking storage tank incident is listed for this facility.

- Fill materials from unknown sources appear to have been utilized at the subject site.

Based on these observations and findings, the Phase II ESA was proposed to evaluate the site for potential impacts to soil and groundwater.

This site assessment was conducted by C.T. Male Associates, P.C. (C.T. Male) as requested by Mr. Rod Donnelly of Donnelly Industries, Inc. in Orange, New Jersey.

2.0 METHOD OF INVESTIGATION

2.1 Test Boring and Monitoring Well Locations

The test boring locations were selected to provide assessment of the site's soil and groundwater conditions. The test borings were located as follows:

- Boring MW-1 was installed near the former waste drum storage area within the former main site building.
- MW-2 was installed to the north of the former main site building in the area of a former potential dry well.
- MW-3 was installed to the east of the former main site building, to the east of the former manufacturing area.
- MW-4 was installed to the south of the former main site building, near the former manufacturing area.
- MW-5 was originally planned to be installed to the south of the central portion of the former main building formerly used as a paint spray booth and wash area. However, due to the presence of wetlands, MW-5 was re-located to the area west of the former paint spray booth/wash area within the foundation of the building.
- MW-6 was installed in the area of the former power house which was used to store waste materials.
- MW-7 was installed to the west of the former site building.
- MW-8 was installed on the eastern portion of the site, to the west of the sewage pump station.
- MW-10 was completed within the central portion of the former main site building used as a paint spray booth and wash area.
- MW-11 was planned to be installed in the western portion of the building to the west of the paint spray booth and wash area, but due to refusal in this area, was

moved to the south side of the foundation, to the southwest of the former paint spray booth and wash area.

- MW-12 was installed on the north central portion of the site, southeast of Martell's Auto, a facility with an active leaking tank incident.
- B-13 was completed within the berm area on the western portion of the site.
- B-14 was completed within the berm area on the eastern portion of the site.

The approximate test boring and monitoring well locations are depicted on the Sampling Location Plan which is included as Figure 2 in Appendix A.

2.2 Drilling Method and Well Construction

The drilling activities were completed on Thursday, November 16, 2006 by Aquifer Drilling and Testing, Inc. (ADT) of Troy, New York. For the purpose of this investigation, Geoprobe drilling techniques were utilized.

At each test location a two-inch diameter MacroCore sampler was advanced at continuous four foot intervals to the termination depths of the borings. The soil sample descriptions for each boring are presented on individual Subsurface Exploration Logs in Appendix B.

Upon completion of sampling, eleven of the thirteen borings were converted to groundwater monitoring wells for the purpose of facilitating the collection of groundwater samples for laboratory analysis.

On Friday, November 17, 2006 the monitoring wells were developed to restore hydraulic connection with the surrounding formation. Each well was developed by purging a minimum of four to five well volumes of water with the exception of MW-3, MW-6, MW-7 and MW-8 which were purged until they were dry.

The groundwater samples were collected in new laboratory supplied glass jars while wearing new gloves on Friday, November 17, 2006. The samples were submitted for laboratory analysis for volatile organic compounds (VOCs) by EPA Method 8260, PCBs by EPA Method 8082 and the 8 RCRA Metals with the exception of MW-12 which was analyzed for VOCs by EPA Method 8260 and semi volatile organic compounds (SVOCs) base/neutrals (B/N) by EPA Method 8270. The samples were

placed in a cooler with ice and transported to Phoenix Environmental Laboratories, Inc. of Manchester, Connecticut following proper chain of custody protocols.

The laboratory analysis results are presented in Appendix D.

2.3 Soil Screening and Sampling

Following the recovery of the soil samples from the test borings, each sample was screened for the presence of detectable volatile organic compounds with a MiniRAE 2000 photo-ionization detector (PID) equipped with a 10.6 eV lamp. The PID meter was calibrated according to manufacturer recommendations prior to use. The PID soil screening results are presented on the Organic Vapor Headspace Analysis Logs in Appendix C.

2.4 Decontamination

To preclude the potential for cross contamination between boring locations, drilling tools and sampling equipment that would contact the site soils were decontaminated prior to the start of the drilling activities and between test boring locations utilizing a detergent/water wash and tap water rinse. All soil samples were handled with a new pair of gloves to deter cross contamination of the soil samples collected for soil screening.

2.5 Surface Water Sampling

A surface water sample, identified as SW-9, was collected the manufacturing area of the former main site building. A boring/monitoring well was initially planned for this area, however, based on the presence of standing water beneath the slab foundation, a surface water sample was collected in lieu of a boring/monitoring well. The surface water sample was collected from a floor drain located in the slab utilizing a peristaltic pump.

3.0 FINDINGS

3.1 Soil Conditions

The soils encountered at each test boring location were similar in composition.

At MW-1, the soils were consistent with fill materials being comprised of fine to coarse sand and fine gravel with brick, ash and cinders to a depth of approximately two feet below grade. These soils were underlain by brown/gray silt with little sand to a depth of 9 feet below grade surface. Brown coarse sand was observed beneath the silt to the termination depth of the boring, 10 feet below grade surface.

At MW-2 the soils were comprised of fill materials including brown/black fine to coarse sand and fine gravel with some cinders. These fill materials were underlain by gray silt followed by gray/brown silt and clay to the termination depth of the boring at 10 feet below grade surface.

At MW-3 the soils were comprised of brown coarse sand and gravel with some weathered rock to a depth of approximately two feet below grade surface. These soils were underlain by gray silt and clay which graded to gray/brown silt and clay with little sand to the termination of the boring at 10 feet below grade surface.

Approximately 2 feet of brick followed by brown coarse sand and gravel were encountered at MW-4. These soils were underlain by gray silt and clay to the termination of the boring at 10 feet below grade surface.

Fill, consisting of black coarse sand and gravel with some weathered rock, was encountered at MW-5 to a depth of approximately 2 feet below grade surface. Gray/brown silt and clay with traces of gravel were encountered from two feet below grade surface to 8 feet below grade surface. Brown coarse sand was found from 8 to 10 feet below grade surface, the termination depth of the boring.

Brown silt which graded to brown silt with little sand was encountered in the upper 8 feet of MW-6. These soils were underlain by brown coarse sand to the termination of the boring at 10 feet below grade surface.

At MW-7 fill materials consisting of brown/black fine to coarse sand and gravel with trace cinders was encountered in the upper two feet of the boring. The fill materials were underlain by gray silt and clay which graded to brown/gray silt and clay with traces of sand. From 9 to 10 feet below grade surface the soils consisted of brown coarse sand.

At MW-8, fill materials consisting of brown fine to coarse sand and fine gravel with some weathered rock were encountered to a depth of three feet below grade. Gray clay graded to brown silt and clay with little sand to the termination of the boring at 10 feet below grade.

At MW-10 fill materials consisted of brown silt and clay with trace brick. The fill materials were underlain by gray clay with some sand which graded to brown/gray silt and sand. At 7 feet below grade surface the soils consisted of gray fine sand which was underlain by brown silt. From 9 to 10 feet below grade surface brown coarse sand was encountered. The boring was terminated at 10 feet below grade surface.

At MW-11, brick was encountered from grade to approximately three feet below grade surface. The brick was underlain by gray clay which graded to brown/gray silt and clay. The boring was terminated at 10 feet below grade surface.

MW-12 was completed in a paved area. Beneath the asphalt, fill materials consisting of black fine to coarse sand and gravel with trace cinders were encountered. The fill materials were underlain by gray clay which graded to brown/gray silt and clay. The boring was terminated at 10 feet below grade surface.

Fill materials consisting of brown silt with varying degrees of sand and gravel were encountered in B-13 and B-14, the borings completed within the berms on the western and eastern portions of the site respectively. The borings were terminated at 12 feet below grade surface where gray silt and clay was encountered.

The soil classifications are summarized on the individual Subsurface Exploration Logs in Appendix B.

No petroleum/chemical type odors were noted within the recovered soil samples.

3.2 Soil Screening Results

Screening of the soils at the test boring locations did not reveal elevated PID readings that would be representative of volatile organic compound vapors. Staining of the soils at the other test boring locations was not evident during the screening activities.

As no significant PID or organoleptic evidence of contamination was detected in the test borings, no soil samples were submitted for laboratory analysis.

3.3 Groundwater Conditions

During sampling activities, groundwater was encountered at shallow depths generally less than three feet below grade at each of the monitoring well locations. The groundwater within the borings did not exhibit odors or sheens. The direction of groundwater flow was not determined on the basis of the water levels within the monitoring wells; however, based on area topography and based on data provided and reviewed concerning the adjoining hazardous waste facility, groundwater movement is inferred to be generally from the south to the north.

3.4 Surface Water Conditions

The surface water sample collected from beneath the slab of the foundation did not exhibit odors or sheens at the time of collection.

4.0 ANALYTICAL RESULTS

4.1 Surface Water

The surface water sample (SW-9) was analyzed for PCBs by EPA Method 8082, VOCs by EPA Method 8260 and for the 8 RCRA Metals.

PCBs and VOCs were not detected in the sample above the laboratory method detection limit.

Three (3) of the eight RCRA metals (Barium, Chromium and Lead) were detected in the sample as summarized in table 4.2-1. Although these metals were detected in the sample, they were present at concentrations less than their respective regulatory values.

4.2 Groundwater Within Monitoring Wells

The groundwater samples collected from each of the monitoring wells installed as a function of this investigation were analyzed for VOCs by EPA Method 8260, PCBs by

EPA Method 8082 and the 8 RCRA Metals with the exception of MW-12 which was analyzed for VOCS by EPA Method 8260 and SVOCs by EPA Method 8270.

There were no PCBs detected above the laboratory method detection limits in the groundwater samples. No SVOCs were detected above the laboratory method detection limit in the groundwater sample from MW-12.

There were no VOCs detected above the laboratory method detection limits in the groundwater samples with the exception of the groundwater samples from MW-2 and MW-10. MW-2 was located to the north of the site building (in the area thought to possibly contain a dry well and north of the former spray paint booth) and MW-10 was located within the building foundation footprint in the area of the former spray paint booth.

At MW-2 and MW-10 cis-1,2-Dichloroethene was detected at a concentration of 34 parts per billion (ppb) at and 12 ppb respectively. The groundwater standard for cis-1,2-Dichloroethene is 5 ppb.

At MW-2 trichloroethene was detected at a concentration of 13 ppb. The groundwater standard for trichloroethene is 5 ppb.

Of the eight RCRA metals, silver, arsenic, barium, chromium, mercury and lead were detected in the various groundwater samples. Table 4.2-1 on the following page provides a summary of the analytes detected. As noted within the table, two compounds were detected above their respective standards; chromium was detected at 0.063 parts per million (ppm) and lead was detected at 0.201 ppm at MW-3 and lead was detected at a concentration of 0.031 ppm at MW-5. The groundwater standard for lead is 0.025 ppm and the groundwater standard for chromium is 0.050 ppm.

A copy of the laboratory analysis report is presented in Appendix D.

TABLE 4.2-1
SUMMARY OF GROUNDWATER AND SURFACE WATER SAMPLING RESULTS AND REGULATORY STANDARDS OLD CHAMPLAIN MILL SITE

PARAMETER	SAMPLE LOCATION AND CONCENTRATION											6NYCRR PART 703.5 GROUNDWATER STANDARD (2)
	MW-1 mg/l	MW-2 mg/l	MW-3 mg/l	MW-4 mg/l	MW-5 mg/l	MW-6 mg/l	MW-7 mg/l	MW-8 mg/l	SW-9 mg/l	MW-10 mg/l	MW-11 mg/l	mg/l
8 RCRA METALS												
Silver	<0.001	<0.001	0.001	<0.001	<0.001	<0.001	<0.001	<0.001	<0.001	<0.001	<0.001	0.050
Arsenic	<0.004	0.005	0.012	<0.004	<0.004	<0.004	<0.004	<0.004	<0.004	<0.004	<0.004	0.025
Barium	0.083	0.068	0.454	0.226	0.217	0.231	0.095	0.136	0.047	0.091	0.184	1
Chromium	0.009	0.003	**0.063**	0.005	0.024	0.022	0.005	0.011	0.002	0.01	0.007	0.050
Mercury	<0.0002	<0.0002	0.0005	<0.0002	0.0004	<0.0002	<0.0002	<0.0002	<0.0002	<0.0002	<0.0002	0.0007
Lead	0.009	0.007	**0.201**	0.008	**0.031**	0.009	0.008	0.02	0.002	0.003	0.013	0.025

mg/l=Parts Per Million
BDL=Below Detection Limit
Values which exceed their respective groundwater standard are depicted in bold type.
(1) Only the compounds that were detected are listed.
(2) TOGS 1.1.1, Ambient Water Quality Standards and Guidance Values and Groundwater Effluent Limitations, New York State Department of Environmental Conservation, June 1998 and Addendum, April 2000.

4.3 Comparison of Results with the Adjoining Hazardous Waste Facility

The Poultney Street Site is located along the railroad bed just south of the subject site. The facility consisted of a dump area and a former fire training area. Drums of acetone, trichloroethene, polycyclic aromatic hydrocarbons, phthalates, benzene, toluene, ethylbenzene and xylene were reportedly brought onto the facility from various sources.

One monitoring well (identified as MW-4 by URS but herein referred to as URSMW-4) exists on the subject site, just north of the hazardous waste facility. The monitoring well was reportedly installed to delineate the magnitude and extent of the contaminant plume emanating from the hazardous waste facility and to assess if the plume had migrated down-gradient beyond the hazardous waste facility property limits. URSMW-4 is situated generally south of MW-2 and MW-10, between the monitoring wells and the Poultney Street Site.

URS Corporation conducted a sampling event on June 17, 2002 which included the sampling and analysis of surface soil, subsurface soil and groundwater from MW-4. Based on the letter from URS to the site owner at the time, the groundwater sample from MW-4 did not contain volatile organic compound contamination.

As noted within the Proposed Remedial Action Plan (PRAP) for the Poultney Street Site, the principal contaminants encountered are VOCs, with the compound with the highest concentration in groundwater being 1,2-dichloroethene (cis), the same compound detected on the site in both MW-2 and MW-10 on the site. Dichloroethene is created through the degradation of trichloroethene. 1,2-dichloroethene and trichloroethene were the two contaminates most frequently detected in groundwater at the Poultney Street Site. Trichloroethene was the second compound identified within the groundwater sample from MW-2.

5.0 CONCLUSIONS AND RECOMMENDATIONS

Phase II activities were performed to determine the quality of soil and groundwater at the site with respect to the recognized environmental conditions identified through the ESA activities including the former use of the site for industrial purposes.

The Phase II activities included a subsurface investigation which included the advancement of thirteen soil borings of which eleven were converted to groundwater monitoring wells, the collection of soil samples for field vapor screening and the collection and analysis of surface water and groundwater for laboratory analysis.

The soils encountered at the site consisted of both fill and native deposits. The fill materials consisted of sand and gravel, brick, ash, cinders, weathered rock, silt and clay which were typically found from below grade to approximately 2-3 feet below grade. Beneath the fill, native silt and clay soils were encountered.

Screening of the soils at the test boring locations did not reveal elevated PID readings that would be representative of volatile organic compound vapors.

The groundwater samples collected from each of the monitoring wells installed as a function of the investigation were analyzed for VOCs by EPA Method 8260, PCBs by EPA Method 8082 and the 8 RCRA Metals with the exception of MW-12 which was analyzed for VOCS by EPA Method 8260 and SVOCs by EPA Method 8270.

There were no PCBs detected above the laboratory method detection limits in the groundwater samples. No SVOCs were detected above the laboratory method detection limit in the groundwater sample from MW-12.

There were no VOCs detected above the laboratory method detection limits in the groundwater samples with the exception of the groundwater samples from MW-2

At MW-2 and MW-10 cis-1,2-Dichloroethene was detected at a concentration of 34 parts per billion (ppb) at and 12 ppb respectively. The groundwater standard for cis-1,2-Dichloroethene is 5 ppb.

At MW-2 Trichloroethene was detected at a concentration of 13 ppb. The groundwater standard for trichloroethene is 5 ppb.

Of the eight RCRA metals, silver, arsenic, barium, chromium, mercury and lead were detected in the various groundwater samples. Two compounds were detected above their respective standards; chromium was detected at 0.063 parts per million (ppm) and lead was detected at 0.201 ppm at MW-3 and lead was detected at a concentration of 0.031 ppm at MW-5. The groundwater standard for lead is 0.025 ppm and the groundwater standard for chromium is 0.050 ppm.

If you have any questions regarding this report, please contact this office at (518) 786-7400.

Respectfully submitted,
C.T. MALE ASSOCIATES, P.C.

Aimee Gates
Environmental Scientist

Reviewed and approved by:

Kirk Moline
Project Manager

December 22, 2006
K:\Projects\066448\Admin\R Old Champlain Mill Phase II ESA.doc

APPENDIX A

Figures/Maps

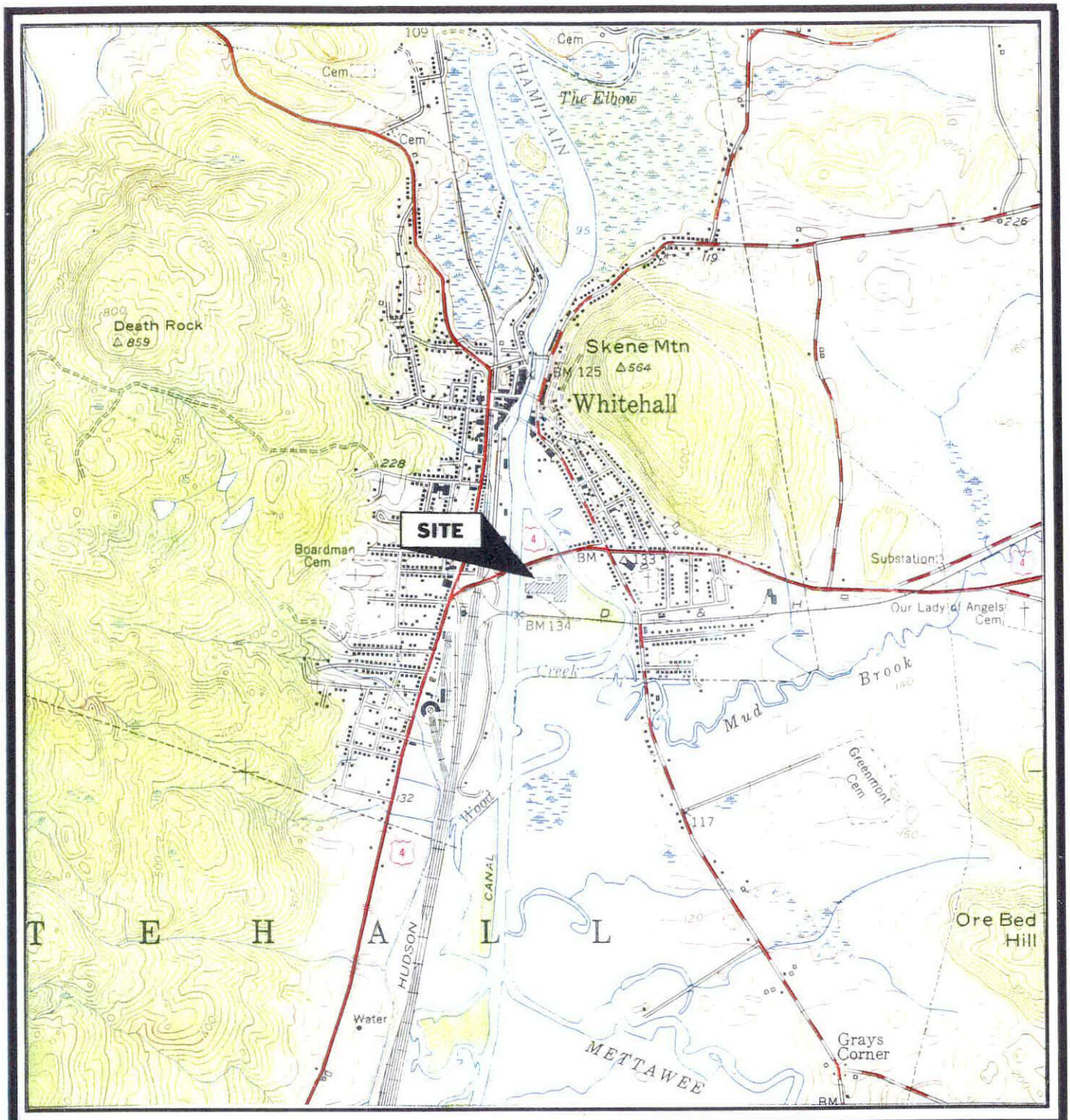

MAP REFERENCE

United States Geological Survey
7.5 Minute Series Topographic Map
Quadrangle: Whitehall, NY
Date: 1950

ENGINEERING
ENVIRONMENTAL SERVICES
SURVEYING
PHONE (518)786-7400
FAX (518) 786-7299

C.T.MALE ASSOCIATES, P.C.
50 CENTURY HILL DRIVE, PO BOX 727, LATHAM, NY 12110

FIGURE 1 SITE LOCATION MAP

OLD CHAMPLAIN MILL

VILLAGE OF WHITEHALL	WASHINGTON COUNTY, NY
SCALE: 1:24,000	
DRAFTER: ASG	
PROJECT No.	

Figure 2

Sampling Location Plan

XREFS: NONE

PROJECT NUMBER:06.6448

CAD DWG. FILE NAME:SL_CHAMPLAIN.DWG

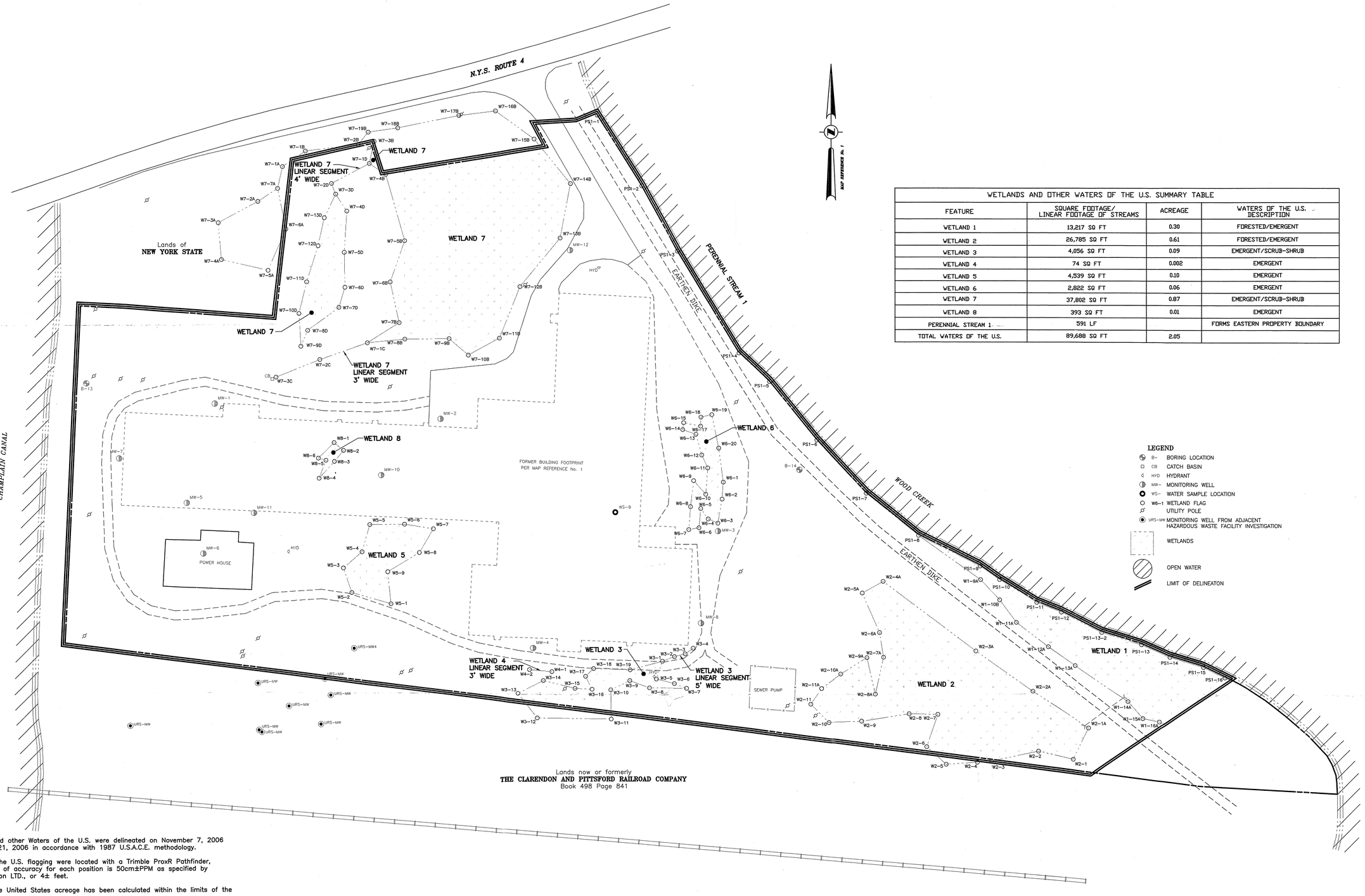

WETLANDS AND OTHER WATERS OF THE U.S. SUMMARY TABLE			
FEATURE	SQUARE FOOTAGE/ LINEAR FOOTAGE OF STREAMS	ACREAGE	WATERS OF THE U.S. DESCRIPTION
WETLAND 1	13,217 SQ FT	0.30	FORESTED/EMERGENT
WETLAND 2	26,785 SQ FT	0.61	FORESTED/EMERGENT
WETLAND 3	4,056 SQ FT	0.09	EMERGENT/SCRUB-SHRUB
WETLAND 4	74 SQ FT	0.002	EMERGENT
WETLAND 5	4,539 SQ FT	0.10	EMERGENT
WETLAND 6	2,822 SQ FT	0.06	EMERGENT
WETLAND 7	37,802 SQ FT	0.87	EMERGENT/SCRUB-SHRUB
WETLAND 8	393 SQ FT	0.01	EMERGENT
PERENNIAL STREAM 1	591 LF		FORMS EASTERN PROPERTY BOUNDARY
TOTAL WATERS OF THE U.S.	89,688 SQ FT	2.05	

LEGEND

- B– BORING LOCATION
- CB CATCH BASIN
- HYD HYDRANT
- MW– MONITORING WELL
- WS– WATER SAMPLE LOCATION
- W6–1 WETLAND FLAG
- UTILITY POLE
- URS–MW MONITORING WELL FROM ADJACENT HAZARDOUS WASTE FACILITY INVESTIGATION
- WETLANDS
- OPEN WATER
- LIMIT OF DELINEATON

Map Notes

1. Wetlands and other Waters of the U.S. were delineated on November 7, 2006 and November 21, 2006 in accordance with 1987 U.S.A.C.E. methodology.

2. Waters of the U.S. flagging were located with a Trimble ProxR Pathfinder, anticipated level of accuracy for each position is 50cm±PPM as specified by Trimble Navigation LTD., or 4± feet.

3. Waters of the United States acreage has been calculated within the limits of the delineation.

4. This survey does not represent a boundary survey, boundary lines and planimetric features shown are approximate per Map Reference No. 1.

Map References

1. "Map of a 6 Lot Subdivision made for Old Champlain Mill Inc. Village of Whitehall. County of Washington, State of New York" prepared by David J. Bolster dated May 13, 2002, DWG. NO. 02–056.

BAR SCALE
50 0 25 50 100
1 inch = 50 ft.

"ONLY COPIES OF THIS MAP SIGNED IN RED INK AND EMBOSSED WITH THE SEAL OF AN OFFICER OF C.T. MALE ASSOCIATES, P.C. OR A DESIGNATED REPRESENTATIVE SHALL BE CONSIDERED TO BE A VALID TRUE COPY."

DATE		REVISIONS RECORD/DESCRIPTION	DRAFTER	CHECK	APPR.
	1				
	2				
	3				
	4				
	5				
	6				
	7				
	8				
	9				

UNAUTHORIZED ALTERATION OR ADDITION TO THIS DOCUMENT IS A VIOLATION OF SECTION 7209 SUBDIVISION 2 OF THE NEW YORK STATE EDUCATION LAW.

© 2006 C.T. MALE ASSOCIATES, P.C.

APPROVED:
DRAFTED : MMB
CHECKED : DGD
PROJ. NO: 06.6448
SCALE : 1"=50'
DATE : DEC. 27, 2006

SAMPLING LOCATION PLAN
PHASE II ENVIRONMENTAL SITE ASSESSMENT
OLD CHAMPLAIN MILL SITE

VILLAGE OF WHITEHALL — WASHINGTON COUNTY, NEW YORK

C.T. MALE ASSOCIATES, P.C.
50 CENTURY HILL DRIVE, P.O. BOX 727, LATHAM, NY 12110
518.786.7400 ✖ FAX 518.786.7299
ARCHITECTURE & BUILDING SYSTEMS ENGINEERING ✖ CIVIL ENGINEERING
ENVIRONMENTAL SERVICES ✖ SURVEY & LAND INFORMATION SERVICES

SHEET 1 OF 1
DWG. NO: 06–0792

APPENDIX B

Subsurface Exploration Logs and Monitoring Well Construction Logs

C.T. MALE ASSOCIATES, P.C.

GEOPROBE SUBSURFACE EXPLORATION LOG

BORING NO.: GP-1 (MW-1)
ELEV.: **DATUM:**
START DATE: 11/16/06 **FINISH DATE: 11/16/06**
SHEET 1 OF 1

PROJECT: Phase II ESA-Old Champlain Mill — CTM PROJECT NO.: 06.6448

LOCATION: Village of Whitehall, Washington County, NY — CTM OBSERVER: DA

DEPTH (FT.)	SAMPLE INTERVAL	SAMPLE NUMBER	SAMPLE RECOVERY (FT)	SAMPLE CLASSIFICATION	NOTES
4		1	3.2	Fill:Black fine to coarse SAND & fine GRAVEL, little brick, trace ash/cinders	Damp
				Brown/Gray SILT, little sand	
8		2	4		
		3	3.0		Wet at 8' bgs
12				Brown coarse SAND	
				Boring terminated at 10' bgs	
16					
20					
24					
28					

DRILLING CONTRACTOR: ADT — GEOPROBE TYPE: Van Mounted S4LT

METHOD OF SAMPLING: Direct Push w/ Percussion Hammer, 4'X2" Macro Core Sampler with Acetate Liner

GROUNDWATER LEVEL READINGS

DATE	LEVEL	REFERENCE MEASURING POINT

THE SUBSURFACE INFORMATION SHOWN HEREON WAS OBTAINED FOR C.T. MALE ASSESSMENT PURPOSES. IT IS MADE AVAILABLE TO AUTHORIZED USERS ONLY THAT THEY MAY HAVE ACCESS TO THE SAME INFORMATION AVAILABLE TO C.T.MALE. IT IS PRESENTED IN GOOD FAITH, BUT IS NOT INTENDED AS A SUBSTITUTE FOR INVESTIGATIONS, INTERPRETATION OR JUDGMENT OF SUCH AUTHORIZED USERS.

SAMPLE CLASSIFICATION BY: DA

C.T. MALE ASSOCIATES, P.C.

GEOPROBE SUBSURFACE EXPLORATION LOG

BORING NO.: GP-2 (MW-2)
ELEV.: **DATUM:**
START DATE: 11/16/06 **FINISH DATE: 11/16/06**
SHEET 1 OF 1

PROJECT: Phase II ESA-Old Champlain Mill — CTM PROJECT NO.: 06.6448

LOCATION: Village of Whitehall, Washington County, NY — CTM OBSERVER: DA

DEPTH (FT.)	SAMPLE INTERVAL	SAMPLE NUMBER	SAMPLE RECOVERY (FT)	SAMPLE CLASSIFICATION	NOTES
4		1	2.5	Fill:Brown/black fine to coarse SAND & fine GRAVEL, some Cinders	Wet at 2' bgs
				Gray SILT and CLAY	
8		2	4.0	Gray/brown SILT and CLAY	
12		3	0.0		No recovery
				Boring terminated at 10' bgs	
16					
20					
24					
28					

DRILLING CONTRACTOR: ADT — GEOPROBE TYPE: Van Mounted S4LT

METHOD OF SAMPLING: Direct Push w/ Percussion Hammer, 4'X2" Macro Core Sampler with Acetate Liner

GROUNDWATER LEVEL READINGS

DATE	LEVEL	REFERENCE MEASURING POINT

SAMPLE CLASSIFICATION BY: DA

THE SUBSURFACE INFORMATION SHOWN HEREON WAS OBTAINED FOR C.T. MALE ASSESSMENT PURPOSES. IT IS MADE AVAILABLE TO AUTHORIZED USERS ONLY THAT THEY MAY HAVE ACCESS TO THE SAME INFORMATION AVAILABLE TO C.T.MALE. IT IS PRESENTED IN GOOD FAITH, BUT IS NOT INTENDED AS A SUBSTITUTE FOR INVESTIGATIONS, INTERPRETATION OR JUDGMENT OF SUCH AUTHORIZED USERS.

C.T. MALE ASSOCIATES, P.C.

GEOPROBE SUBSURFACE EXPLORATION LOG

BORING NO.: GP-3 (MW-3)
ELEV.: **DATUM:**
START DATE: 11/16/06 **FINISH DATE: 11/16/06**
SHEET 1 OF 1

PROJECT: Phase II ESA-Old Champlain Mill — CTM PROJECT NO.: 06.6448

LOCATION: Village of Whitehall, Washington County, NY — CTM OBSERVER: DA

DEPTH (FT.)	SAMPLE INTERVAL	SAMPLE NUMBER	SAMPLE RECOVERY (FT)	SAMPLE CLASSIFICATION	NOTES
4		1	2.5	Brown coarse SAND and GRAVEL, some Weathered Rock	
				Gray SILT and CLAY	Wet at 4' bgs
8		2	3	Gray/brown SILT and CLAY, little sand	
12		3	0.0		No recovery
				Boring terminated at 10' bgs	
16					
20					
24					
28					

DRILLING CONTRACTOR: ADT — GEOPROBE TYPE: Van Mounted S4LT

METHOD OF SAMPLING: Direct Push w/ Percussion Hammer, 4'X2" Macro Core Sampler with Acetate Liner

GROUNDWATER LEVEL READINGS

DATE	LEVEL	REFERENCE MEASURING POINT

SAMPLE CLASSIFICATION BY: DA

THE SUBSURFACE INFORMATION SHOWN HEREON WAS OBTAINED FOR C.T. MALE ASSESSMENT PURPOSES. IT IS MADE AVAILABLE TO AUTHORIZED USERS ONLY THAT THEY MAY HAVE ACCESS TO THE SAME INFORMATION AVAILABLE TO C.T.MALE. IT IS PRESENTED IN GOOD FAITH, BUT IS NOT INTENDED AS A SUBSTITUTE FOR INVESTIGATIONS, INTERPRETATION OR JUDGMENT OF SUCH AUTHORIZED USERS.

C.T. MALE ASSOCIATES, P.C.

GEOPROBE SUBSURFACE EXPLORATION LOG

BORING NO.: GP-4 (MW-4)
ELEV.: **DATUM:**
START DATE: 11/16/06 **FINISH DATE: 11/16/06**
SHEET 1 OF 1

PROJECT: Phase II ESA-Old Champlain Mill — CTM PROJECT NO.: 06.6448

LOCATION: Village of Whitehall, Washington County, NY — CTM OBSERVER: DA

DEPTH (FT.)	SAMPLE INTERVAL	SAMPLE NUMBER	SAMPLE RECOVERY (FT)	SAMPLE CLASSIFICATION	NOTES
4		1	2.0	Fill: BRICK Brown coarse SAND and Gravel	Wet at 4' bgs
8		2	2.6	Gray SILT and CLAY Gray/Brown SILT and CLAY	
12		3	0.0		No recovery
				Boring terminated at 10' bgs	
16					
20					
24					
28					

DRILLING CONTRACTOR: ADT — GEOPROBE TYPE: Van Mounted S4LT

METHOD OF SAMPLING: Direct Push w/ Percussion Hammer, 4'X2" Macro Core Sampler with Acetate Liner

GROUNDWATER LEVEL READINGS

DATE	LEVEL	REFERENCE MEASURING POINT

SAMPLE CLASSIFICATION BY: DA

THE SUBSURFACE INFORMATION SHOWN HEREON WAS OBTAINED FOR C.T. MALE ASSESSMENT PURPOSES. IT IS MADE AVAILABLE TO AUTHORIZED USERS ONLY THAT THEY MAY HAVE ACCESS TO THE SAME INFORMATION AVAILABLE TO C.T.MALE. IT IS PRESENTED IN GOOD FAITH, BUT IS NOT INTENDED AS A SUBSTITUTE FOR INVESTIGATIONS, INTERPRETATION OR JUDGMENT OF SUCH AUTHORIZED USERS.

C.T. MALE ASSOCIATES, P.C.

GEOPROBE SUBSURFACE EXPLORATION LOG

BORING NO.: GP-5 (MW-5)
ELEV.: **DATUM:**
START DATE: 11/16/06 **FINISH DATE: 11/16/06**
SHEET 1 OF 1

PROJECT: Phase II ESA-Old Champlain Mill — CTM PROJECT NO.: 06.6448

LOCATION: Village of Whitehall, Washington County, NY — CTM OBSERVER: DA

DEPTH (FT.)	SAMPLE INTERVAL	SAMPLE NUMBER	SAMPLE RECOVERY (FT)	SAMPLE CLASSIFICATION	NOTES
4		1	2.2	Fill: Black coarse SAND and GRAVEL, some Weathered Rock	
				Gray/brown SILT and CLAY, trace gravel	
8		2	4.0		
12		3	1.5	Brown coarse SAND	Wet at 8' bgs
				Boring terminated at 10' bgs	
16					
20					
24					
28					

DRILLING CONTRACTOR: ADT — GEOPROBE TYPE: Van Mounted S4LT

METHOD OF SAMPLING: Direct Push w/ Percussion Hammer, 4'X2" Macro Core Sampler with Acetate Liner

GROUNDWATER LEVEL READINGS

DATE	LEVEL	REFERENCE MEASURING POINT

SAMPLE CLASSIFICATION BY: DA

THE SUBSURFACE INFORMATION SHOWN HEREON WAS OBTAINED FOR C.T. MALE ASSESSMENT PURPOSES. IT IS MADE AVAILABLE TO AUTHORIZED USERS ONLY THAT THEY MAY HAVE ACCESS TO THE SAME INFORMATION AVAILABLE TO C.T.MALE. IT IS PRESENTED IN GOOD FAITH, BUT IS NOT INTENDED AS A SUBSTITUTE FOR INVESTIGATIONS, INTERPRETATION OR JUDGMENT OF SUCH AUTHORIZED USERS.

C.T. MALE ASSOCIATES, P.C.

GEOPROBE SUBSURFACE EXPLORATION LOG

BORING NO.: GP-6 (MW-6)
ELEV.: **DATUM:**
START DATE: 11/16/06 **FINISH DATE: 11/16/06**
SHEET 1 OF 1

PROJECT: Phase II ESA-Old Champlain Mill — CTM PROJECT NO.: 06.6448

LOCATION: Village of Whitehall, Washington County, NY — CTM OBSERVER: DA

DEPTH (FT.)	SAMPLE INTERVAL	SAMPLE NUMBER	SAMPLE RECOVERY (FT)	SAMPLE CLASSIFICATION	NOTES
4		1	2.5	Brown SILT	
				Brown SILT, little sand	
8		2	4.0		
		3	2.0	Brown coarse SAND	Wet at 8' bgs
12				Boring terminated at 10' bgs	
16					
20					
24					
28					

DRILLING CONTRACTOR: ADT — GEOPROBE TYPE: Van Mounted S4LT

METHOD OF SAMPLING: Direct Push w/ Percussion Hammer, 4'X2" Macro Core Sampler with Acetate Liner

GROUNDWATER LEVEL READINGS

DATE	LEVEL	REFERENCE MEASURING POINT

SAMPLE CLASSIFICATION BY: DA

THE SUBSURFACE INFORMATION SHOWN HEREON WAS OBTAINED FOR C.T. MALE ASSESSMENT PURPOSES. IT IS MADE AVAILABLE TO AUTHORIZED USERS ONLY THAT THEY MAY HAVE ACCESS TO THE SAME INFORMATION AVAILABLE TO C.T.MALE. IT IS PRESENTED IN GOOD FAITH, BUT IS NOT INTENDED AS A SUBSTITUTE FOR INVESTIGATIONS, INTERPRETATION OR JUDGMENT OF SUCH AUTHORIZED USERS.

C.T. MALE ASSOCIATES, P.C.

GEOPROBE SUBSURFACE EXPLORATION LOG

BORING NO.: GP-7 (MW-7)
ELEV.: **DATUM:**
START DATE: 11/16/06 **FINISH DATE: 11/16/06**
SHEET 1 OF 1

PROJECT: Phase II ESA-Old Champlain Mill — CTM PROJECT NO.: 06.6448

LOCATION: Village of Whitehall, Washington County, NY — CTM OBSERVER: DA

DEPTH (FT.)	SAMPLE INTERVAL	SAMPLE NUMBER	SAMPLE RECOVERY (FT)	SAMPLE CLASSIFICATION	NOTES
4		1	2.7	Fill: Brown/Black fine to coarse SAND and GRAVEL, trace cinders	
				Gray SILT and CLAY	
8		2	4.0	Brown/gray SILT and CLAY, trace sand	
		3	3.0		Wet at 8' bgs
12				Brown coarse SAND	
				Boring terminated at 10' bgs	
16					
20					
24					
28					

DRILLING CONTRACTOR: ADT — GEOPROBE TYPE: Van Mounted S4LT

METHOD OF SAMPLING: Direct Push w/ Percussion Hammer, 4'X2" Macro Core Sampler with Acetate Liner

GROUNDWATER LEVEL READINGS

DATE	LEVEL	REFERENCE MEASURING POINT

SAMPLE CLASSIFICATION BY: DA

THE SUBSURFACE INFORMATION SHOWN HEREON WAS OBTAINED FOR C.T. MALE ASSESSMENT PURPOSES. IT IS MADE AVAILABLE TO AUTHORIZED USERS ONLY THAT THEY MAY HAVE ACCESS TO THE SAME INFORMATION AVAILABLE TO C.T.MALE. IT IS PRESENTED IN GOOD FAITH, BUT IS NOT INTENDED AS A SUBSTITUTE FOR INVESTIGATIONS, INTERPRETATION OR JUDGMENT OF SUCH AUTHORIZED USERS.

C.T. MALE ASSOCIATES, P.C.

GEOPROBE SUBSURFACE EXPLORATION LOG

BORING NO.: GP-8 (MW-8)
ELEV.: **DATUM:**
START DATE: 11/16/06 **FINISH DATE: 11/16/06**
SHEET 1 OF 1

PROJECT: Phase II ESA-Old Champlain Mill — CTM PROJECT NO.: 06.6448

LOCATION: Village of Whitehall, Washington County, NY — CTM OBSERVER: DA

DEPTH (FT.)	SAMPLE INTERVAL	SAMPLE NUMBER	SAMPLE RECOVERY (FT)	SAMPLE CLASSIFICATION	NOTES
4		1	2.6	Fill:Brown fine to coarse SAND & fine GRAVEL, some Weathered Rock	Wet at 3' bgs
				Gray CLAY	
8		2	4.0	Brown SILT and CLAY, little sand	
12		3	0.0		No recovery
				Boring terminated at 10' bgs	
16					
20					
24					
28					

DRILLING CONTRACTOR: ADT — GEOPROBE TYPE: Van Mounted S4LT

METHOD OF SAMPLING: Direct Push w/ Percussion Hammer, 4'X2" Macro Core Sampler with Acetate Liner

GROUNDWATER LEVEL READINGS

DATE	LEVEL	REFERENCE MEASURING POINT

SAMPLE CLASSIFICATION BY: DA

THE SUBSURFACE INFORMATION SHOWN HEREON WAS OBTAINED FOR C.T. MALE ASSESSMENT PURPOSES. IT IS MADE AVAILABLE TO AUTHORIZED USERS ONLY THAT THEY MAY HAVE ACCESS TO THE SAME INFORMATION AVAILABLE TO C.T.MALE. IT IS PRESENTED IN GOOD FAITH, BUT IS NOT INTENDED AS A SUBSTITUTE FOR INVESTIGATIONS, INTERPRETATION OR JUDGMENT OF SUCH AUTHORIZED USERS.

C.T. MALE ASSOCIATES, P.C.

GEOPROBE SUBSURFACE EXPLORATION LOG

BORING NO.: GP-10 (MW-10)
ELEV.: **DATUM:**
START DATE: 11/16/06 **FINISH DATE: 11/16/06**
SHEET 1 OF 1

PROJECT: Phase II ESA-Old Champlain Mill — CTM PROJECT NO.: 06.6448

LOCATION: Village of Whitehall, Washington County, NY — CTM OBSERVER: DA

DEPTH (FT.)	SAMPLE INTERVAL	SAMPLE NUMBER	SAMPLE RECOVERY (FT)	SAMPLE CLASSIFICATION	NOTES
4		1	3.0	Fill: Brown SILT and CLAY, trace brick	
				Gray CLAY, some Sand	
8		2	4.0	Brown/gray SILT and SAND	
				Gray fine SAND	
12		3	2.8	Brown SILT	Wet at 8' bgs
				Brown coarse SAND	
				Boring terminated at 10' bgs	
16					
20					
24					
28					

DRILLING CONTRACTOR: ADT — GEOPROBE TYPE: Van Mounted S4LT

METHOD OF SAMPLING: Direct Push w/ Percussion Hammer, 4'X2" Macro Core Sampler with Acetate Liner

GROUNDWATER LEVEL READINGS

DATE	LEVEL	REFERENCE MEASURING POINT

SAMPLE CLASSIFICATION BY: DA

THE SUBSURFACE INFORMATION SHOWN HEREON WAS OBTAINED FOR C.T. MALE ASSESSMENT PURPOSES. IT IS MADE AVAILABLE TO AUTHORIZED USERS ONLY THAT THEY MAY HAVE ACCESS TO THE SAME INFORMATION AVAILABLE TO C.T.MALE. IT IS PRESENTED IN GOOD FAITH, BUT IS NOT INTENDED AS A SUBSTITUTE FOR INVESTIGATIONS, INTERPRETATION OR JUDGMENT OF SUCH AUTHORIZED USERS.

C.T. MALE ASSOCIATES, P.C.

GEOPROBE SUBSURFACE EXPLORATION LOG

BORING NO.: GP-11 (MW-11)
ELEV.: **DATUM:**
START DATE: 11/16/06 **FINISH DATE: 11/16/06**
SHEET 1 OF 1

PROJECT: Phase II ESA-Old Champlain Mill — CTM PROJECT NO.: 06.6448

LOCATION: Village of Whitehall, Washington County, NY — CTM OBSERVER: DA

DEPTH (FT.)	SAMPLE INTERVAL	SAMPLE NUMBER	SAMPLE RECOVERY (FT)	SAMPLE CLASSIFICATION	NOTES
4		1	1.7	Fill: BRICK	
				Gray CLAY	
8		2	2.0	Brown/gray SILT and CLAY	Wet at 8' bgs
12		3	0.0		No recovery
				Boring terminated at 10' bgs	
16					
20					
24					
28					

DRILLING CONTRACTOR: ADT — GEOPROBE TYPE: Van Mounted S4LT

METHOD OF SAMPLING: Direct Push w/ Percussion Hammer, 4'X2" Macro Core Sampler with Acetate Liner

GROUNDWATER LEVEL READINGS

DATE	LEVEL	REFERENCE MEASURING POINT

SAMPLE CLASSIFICATION BY: DA

THE SUBSURFACE INFORMATION SHOWN HEREON WAS OBTAINED FOR C.T. MALE ASSESSMENT PURPOSES. IT IS MADE AVAILABLE TO AUTHORIZED USERS ONLY THAT THEY MAY HAVE ACCESS TO THE SAME INFORMATION AVAILABLE TO C.T.MALE. IT IS PRESENTED IN GOOD FAITH, BUT IS NOT INTENDED AS A SUBSTITUTE FOR INVESTIGATIONS, INTERPRETATION OR JUDGMENT OF SUCH AUTHORIZED USERS.

C.T. MALE ASSOCIATES, P.C.

GEOPROBE SUBSURFACE EXPLORATION LOG

BORING NO.: GP-12 (MW-12)
ELEV.: **DATUM:**
START DATE: 11/16/06 **FINISH DATE: 11/16/06**
SHEET 1 OF 1

PROJECT: Phase II ESA-Old Champlain Mill — CTM PROJECT NO.: 06.6448

LOCATION: Village of Whitehall, Washington County, NY — CTM OBSERVER: DA

DEPTH (FT.)	SAMPLE INTERVAL	SAMPLE NUMBER	SAMPLE RECOVERY (FT)	SAMPLE CLASSIFICATION	NOTES
4		1	2.2	0.3' ASPHALT Fill: Black fine to coarse SAND and GRAVEL, trace cinders	Wet at 3' bgs
				Gray CLAY	
8		2	3.5	Brown SILT and CLAY, little sand	
12		3	0.0		No recovery
				Boring terminated at 10' bgs	
16					
20					
24					
28					

DRILLING CONTRACTOR: ADT — GEOPROBE TYPE: Van Mounted S4LT

METHOD OF SAMPLING: Direct Push w/ Percussion Hammer, 4'X2" Macro Core Sampler with Acetate Liner

GROUNDWATER LEVEL READINGS

DATE	LEVEL	REFERENCE MEASURING POINT

SAMPLE CLASSIFICATION BY: DA

THE SUBSURFACE INFORMATION SHOWN HEREON WAS OBTAINED FOR C.T. MALE ASSESSMENT PURPOSES. IT IS MADE AVAILABLE TO AUTHORIZED USERS ONLY THAT THEY MAY HAVE ACCESS TO THE SAME INFORMATION AVAILABLE TO C.T.MALE. IT IS PRESENTED IN GOOD FAITH, BUT IS NOT INTENDED AS A SUBSTITUTE FOR INVESTIGATIONS, INTERPRETATION OR JUDGMENT OF SUCH AUTHORIZED USERS.

C.T. MALE ASSOCIATES, P.C.

GEOPROBE SUBSURFACE EXPLORATION LOG

BORING NO.: GP-13
ELEV.: **DATUM:**
START DATE: 11/16/06 **FINISH DATE: 11/16/06**
SHEET 1 OF 1

PROJECT: Phase II ESA-Old Champlain Mill — CTM PROJECT NO.: 06.6448

LOCATION: Village of Whitehall, Washington County, NY — CTM OBSERVER: DA

DEPTH (FT.)	SAMPLE INTERVAL	SAMPLE NUMBER	SAMPLE RECOVERY (FT)	SAMPLE CLASSIFICATION	NOTES
4		1	2.0	Fill: Brown SILT	
				Fill: Brown fine SILT, some Sand, little gravel	
8		2	2.0		
		3	3.0		
				Gray SILT and CLAY	
16				Boring terminated at 12' bgs	
20					
24					
28					

DRILLING CONTRACTOR: ADT — GEOPROBE TYPE: Van Mounted S4LT

METHOD OF SAMPLING: Direct Push w/ Percussion Hammer, 4'X2" Macro Core Sampler with Acetate Liner

GROUNDWATER LEVEL READINGS

DATE	LEVEL	REFERENCE MEASURING POINT

THE SUBSURFACE INFORMATION SHOWN HEREON WAS OBTAINED FOR C.T. MALE ASSESSMENT PURPOSES. IT IS MADE AVAILABLE TO AUTHORIZED USERS ONLY THAT THEY MAY HAVE ACCESS TO THE SAME INFORMATION AVAILABLE TO C.T.MALE. IT IS PRESENTED IN GOOD FAITH, BUT IS NOT INTENDED A SUBSTITUTE FOR INVESTIGATIONS, INTERPRETATION OR JUDGMENT OF SUCH AUTHORIZED USERS.

SAMPLE CLASSIFICATION BY: DA

C.T. MALE ASSOCIATES, P.C.

GEOPROBE SUBSURFACE EXPLORATION LOG

BORING NO.: GP-14
ELEV.: **DATUM:**
START DATE: 11/16/06 **FINISH DATE: 11/16/06**
SHEET 1 OF 1

PROJECT: Phase II ESA-Old Champlain Mill — CTM PROJECT NO.: 06.6448

LOCATION: Village of Whitehall, Washington County, NY — CTM OBSERVER: DA

DEPTH (FT.)	SAMPLE INTERVAL	SAMPLE NUMBER	SAMPLE RECOVERY (FT)	SAMPLE CLASSIFICATION	NOTES
4		1	3.2	Fill: Brown SILT, some Sand	
8		2	4.0		
12		3	4.0		Coarse GRAVEL seam at 11' bgs
				Gray SILT and CLAY	
16				Boring terminated at 12' bgs	
20					
24					
28					

DRILLING CONTRACTOR: ADT — GEOPROBE TYPE: Van Mounted S4LT

METHOD OF SAMPLING: Direct Push w/ Percussion Hammer, 4'X2" Macro Core Sampler with Acetate Liner

GROUNDWATER LEVEL READINGS

DATE	LEVEL	REFERENCE MEASURING POINT

SAMPLE CLASSIFICATION BY: DA

THE SUBSURFACE INFORMATION SHOWN HEREON WAS OBTAINED FOR C.T. MALE ASSESSMENT PURPOSES. IT IS MADE AVAILABLE TO AUTHORIZED USERS ONLY THAT THEY MAY HAVE ACCESS TO THE SAME INFORMATION AVAILABLE TO C.T.MALE. IT IS PRESENTED IN GOOD FAITH, BUT IS NOT INTENDED AS A SUBSTITUTE FOR INVESTIGATIONS, INTERPRETATION OR JUDGMENT OF SUCH AUTHORIZED USERS.

Well No. MW-1

MONITOR WELL CONSTRUCTION LOG

C.T. MALE ASSOCIATES, P.C.

Project Number 06.6448

Project Name Old Champlain Mill Phase II ESA

Well No. MW-1 Boring No. GP-1

Town/City Village of Whitehall

County Washington State New York

Installation Date(s) 11/16/06

Drilling Contractor ADT, Inc.

Drilling Method Van Mounted Geoprobe

Water Depth From Top of Riser 3.70' ft 11/17/06 Date

Drilling Inspector Present Dan Achtyl

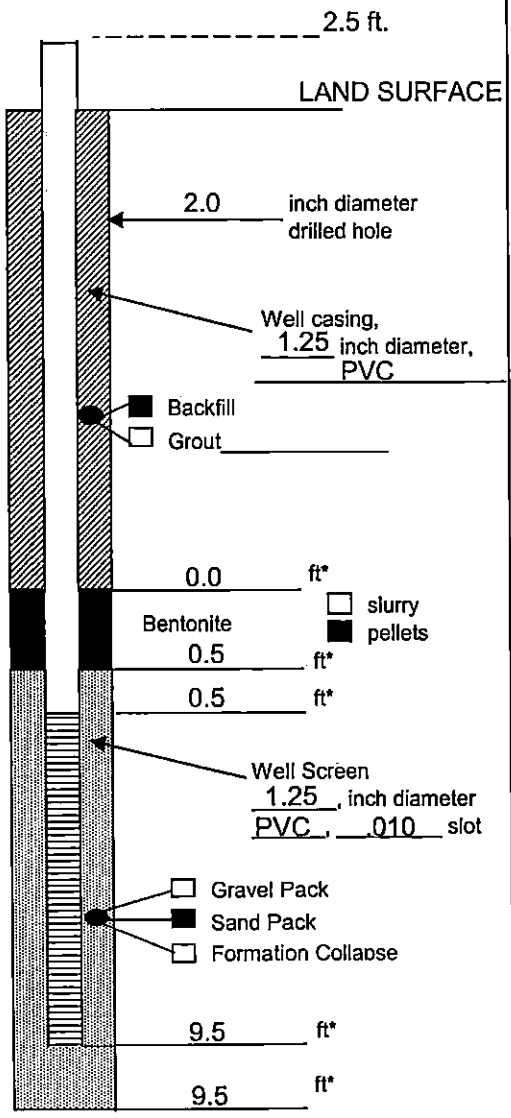

* Depth below land surface.

Notes:

9' of 1.25" diameter, schedule 40, 0.010 slot PVC well screen
3' of 1.25" diameter, schedule 40 PVC riser
1 slip-on end cap
1/10± bag NSF Sand
1/10± bag Bentonite granules

Well No. MW-2

MONITOR WELL CONSTRUCTION LOG

C.T. MALE ASSOCIATES, P.C.

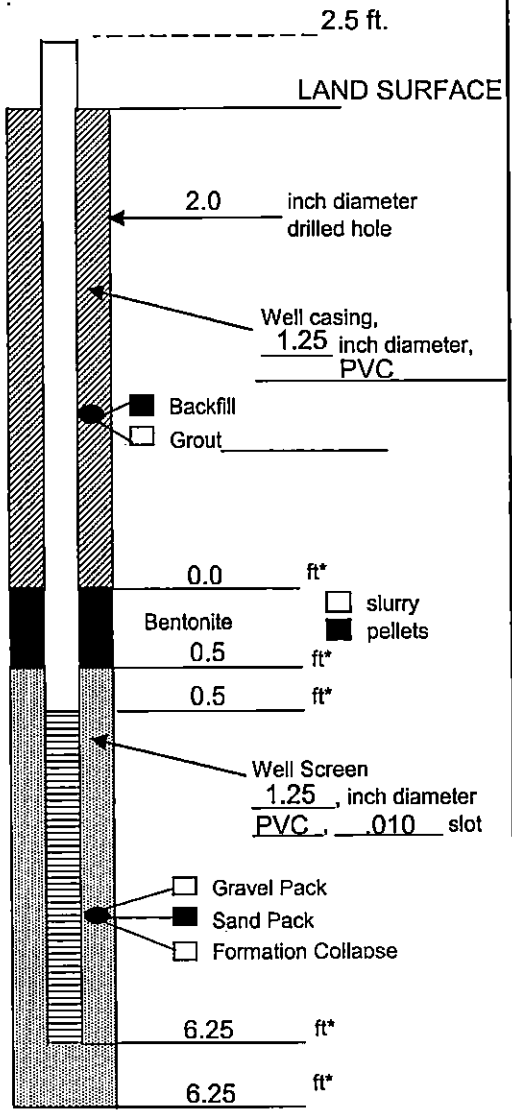

* Depth below land surface.

Project Number 06.6448

Project Name Old Champlain Mill Phase II ESA

Well No. MW-2 Boring No. GP-2

Town/City Village of Whitehall

County Washington State New York

Installation Date(s) 11/16/06

Drilling Contractor ADT, Inc.

Drilling Method Van Mounted Geoprobe

Water Depth From Top of Riser 2.60' ft 11/17/06 Date

Drilling Inspector Present Dan Achtyl

Notes:

8.75' of 1.25" diameter, schedule 40, 0.010 slot PVC well screen
1 slip-on end cap
1/10± bag Bentonite granules

Well No. MW-3

MONITOR WELL CONSTRUCTION LOG

C.T. MALE ASSOCIATES, P.C.

Project Number 06.6448

Project Name Old Champlain Mill Phase II ESA

Well No. MW-3 Boring No. GP-3

Town/City Village of Whitehall

County Washington State New York

Installation Date(s) 11/16/06

Drilling Contractor ADT, Inc.

Drilling Method Van Mounted Geoprobe

Water Depth From Top of Riser 2.80' ft 11/17/06 Date

Drilling Inspector Present Dan Achtyl

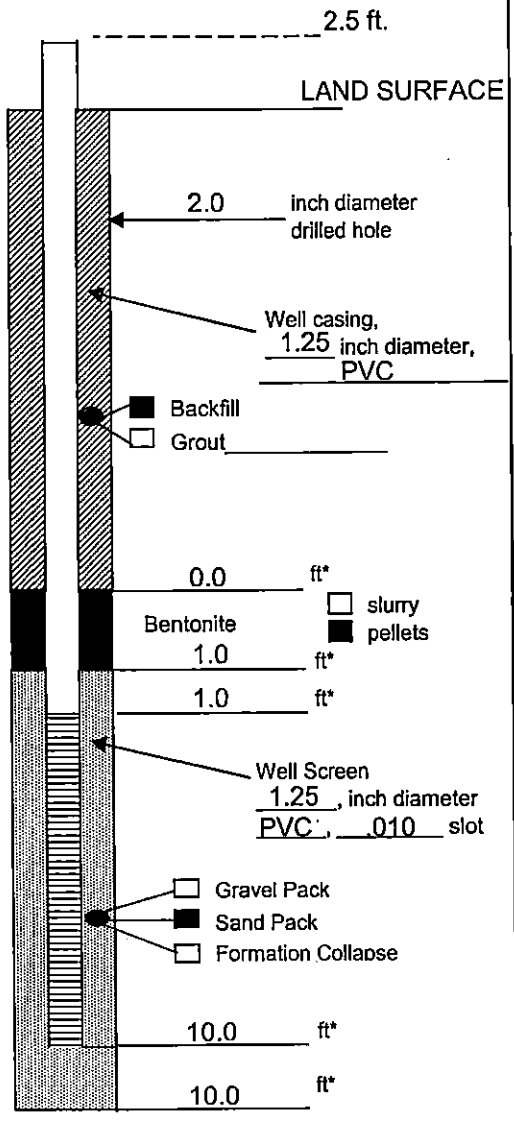

* Depth below land surface.

Notes:

9' of 1.25" diameter, schedule 40, 0.010 slot PVC well screen
3.5' of 1.25" diameter, schedule 40 PVC riser
1 slip-on end cap
1/10± bag NSF Sand
1/10± bag Bentonite granules

Well No. MW-4

MONITOR WELL CONSTRUCTION LOG

C.T. MALE ASSOCIATES, P.C.

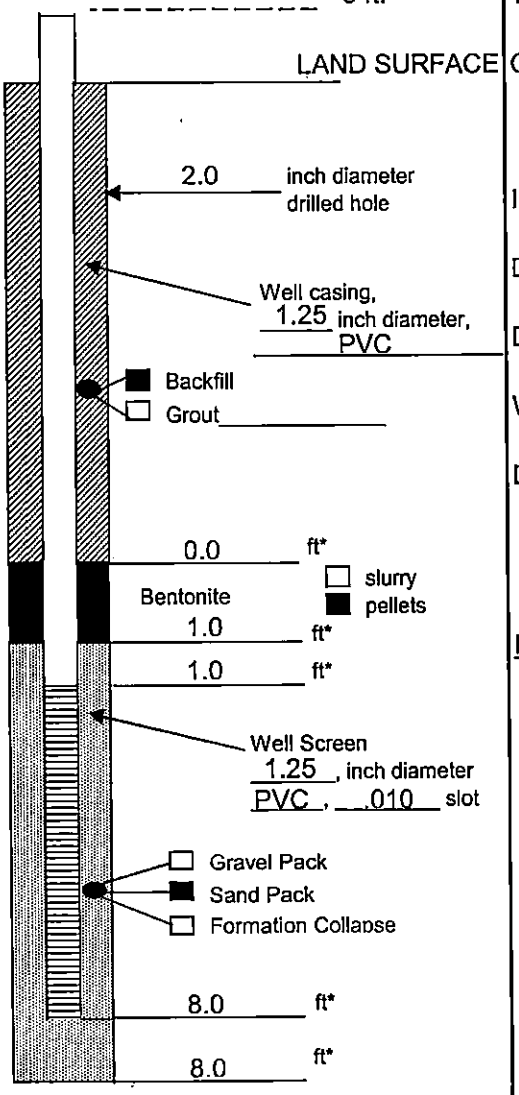

* Depth below land surface.

Project Number 06.6448

Project Name Old Champlain Mill Phase II ESA

Well No. MW-4 Boring No. GP-4

Town/City Village of Whitehall

County Washington State New York

Installation Date(s) 11/16/06

Drilling Contractor ADT, Inc.

Drilling Method Van Mounted Geoprobe

Water Depth From Top of Riser 3.78 ft 11/17/06 (Date)

Drilling Inspector Present Dan Achtyl

Notes:

9' of 1.25" diameter, schedule 40, 0.010 slot PVC well screen
2' of 1.25" diameter, schedule 40 PVC riser
1 slip-on end cap
1/10± bag NSF Sand
1/10± bag Bentonite granules

Well No. MW-5

MONITOR WELL CONSTRUCTION LOG

C.T. MALE ASSOCIATES, P.C.

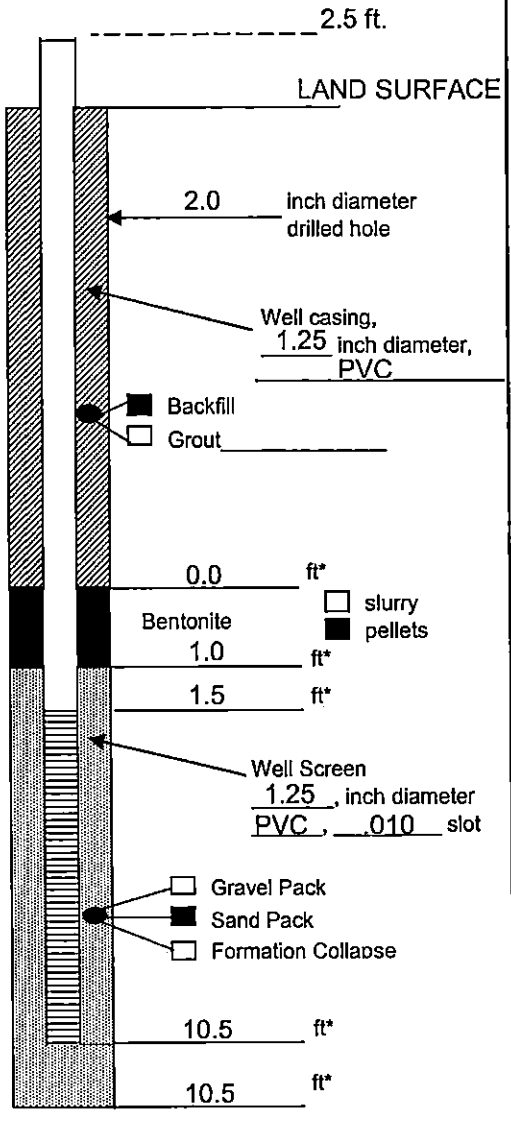

* Depth below land surface.

Project Number 06.6448

Project Name Old Champlain Mill Phase II ESA

Well No. MW-5 Boring No. GP-5

Town/City Village of Whitehall

County Washington State New York

Installation Date(s) 11/16/06

Drilling Contractor ADT, Inc.

Drilling Method Van Mounted Geoprobe

Water Depth From Top of Riser 5.35 ft 11/17/06 (Date)

Drilling Inspector Present Dan Achtyl

Notes:

9' of 1.25" diameter, schedule 40, 0.010 slot PVC well screen
4' of 1.25" diameter, schedule 40 PVC riser
1 slip-on end cap
1/10± bag NSF Sand
1/10± bag Bentonite granules

Well No. MW-6

MONITOR WELL CONSTRUCTION LOG

C.T. MALE ASSOCIATES, P.C.

Project Number 06.6448

Project Name Old Champlain Mill Phase II ESA

Well No. MW-6 Boring No. GP-6

Town/City Village of Whitehall

County Washington State New York

Installation Date(s) 11/16/06

Drilling Contractor ADT, Inc.

Drilling Method Van Mounted Geoprobe

Water Depth From Top of Riser 5.35 ft 11/17/06 (Date)

Drilling Inspector Present Dan Achtyl

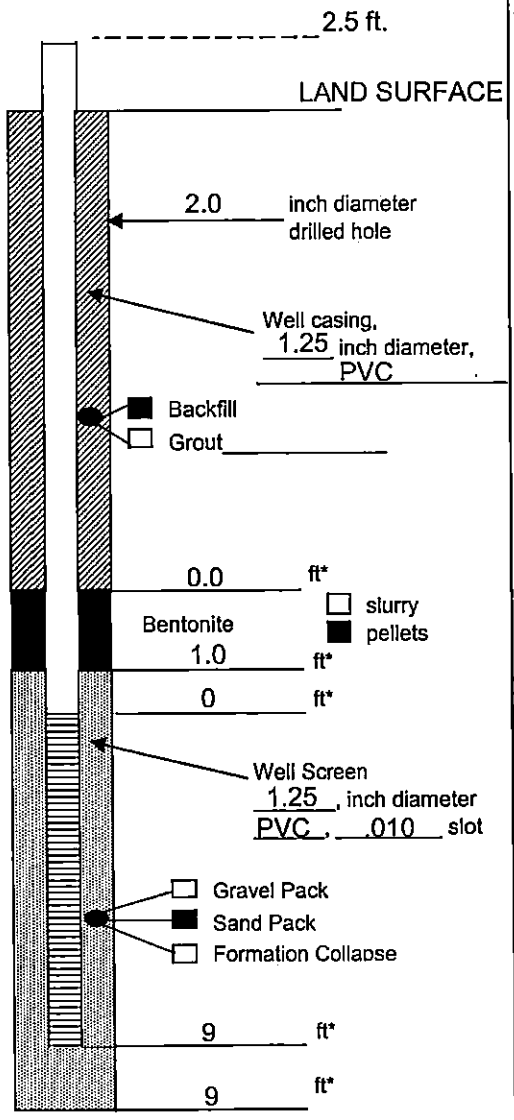

* Depth below land surface.

Notes:

9' of 1.25" diameter, schedule 40, 0.010 slot PVC well screen
2.5' of 1.25" diameter, schedule 40 PVC riser
1 slip-on end cap
1/10± bag NSF Sand
1/10± bag Bentonite granules

Well No. MW-7

MONITOR WELL CONSTRUCTION LOG

C.T. MALE ASSOCIATES, P.C.

Project Number 06.6448

Project Name Old Champlain Mill Phase II ESA

Well No. MW-7 Boring No. GP-7

Town/City Village of Whitehall

County Washington State New York

Installation Date(s) 11/16/06

Drilling Contractor ADT, Inc.

Drilling Method Van Mounted Geoprobe

Water Depth From Top of Riser 2.90 ft 11/17/06 (Date)

Drilling Inspector Present Dan Achtyl

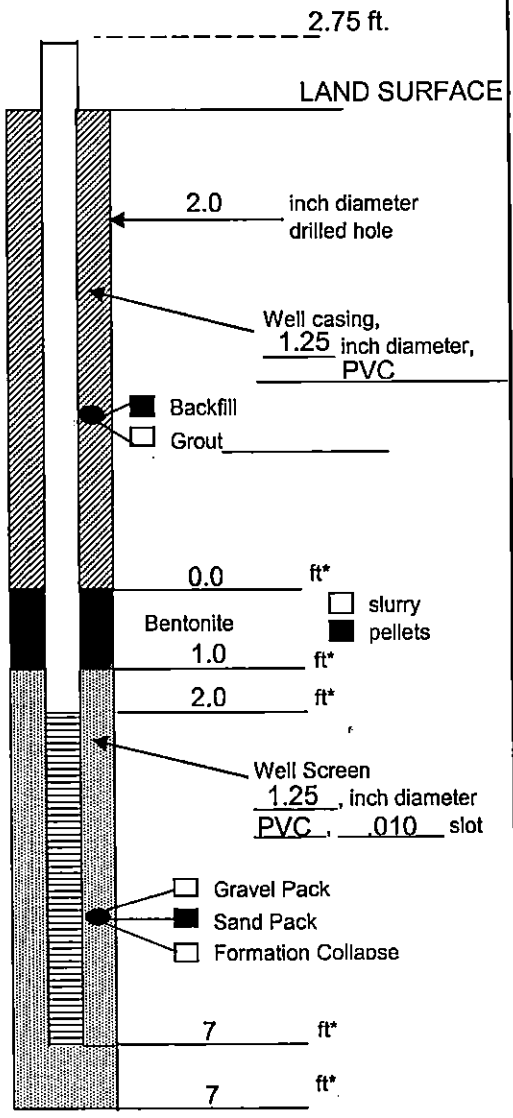

* Depth below land surface.

Notes:

9' of 1.25" diameter, schedule 40, 0.010 slot PVC well screen
0.75 1.25" diameter, schedule 40 PVC riser
1 slip-on end cap
1/10± bag NSF Sand
1/10± bag Bentonite granules

Well No. MW-8

MONITOR WELL CONSTRUCTION LOG

C.T. MALE ASSOCIATES, P.C.

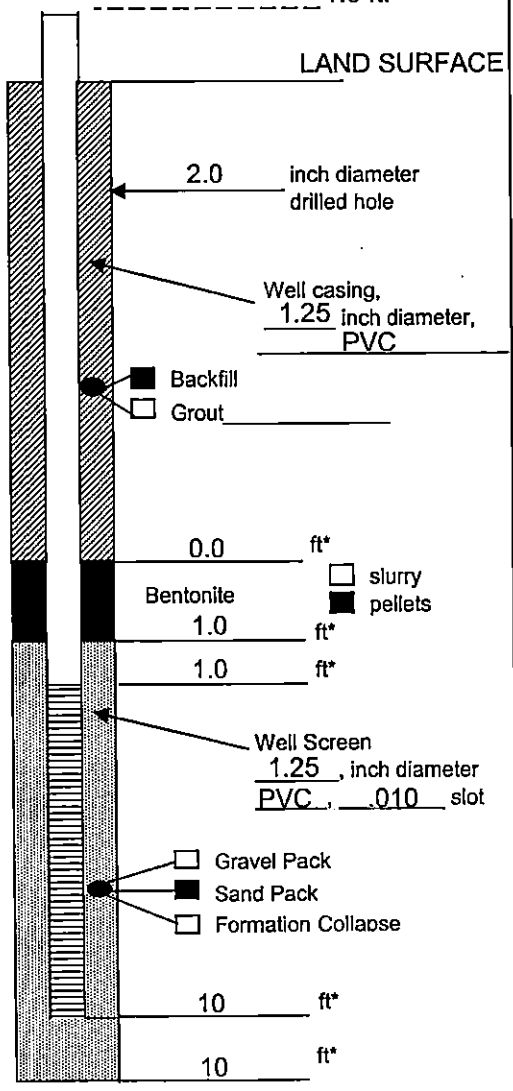

* Depth below land surface.

Project Number 06.6448

Project Name Old Champlain Mill Phase II ESA

Well No. MW-8 Boring No. GP-8

Town/City Village of Whitehall

County Washington State New York

Installation Date(s) 11/16/06

Drilling Contractor ADT, Inc.

Drilling Method Van Mounted Geoprobe

Water Depth From Top of Riser 2.50 ft 11/17/06 (Date)

Drilling Inspector Present Dan Achtyl

Notes:

9' of 1.25" diameter, schedule 40, 0.010 slot PVC well screen
2.5' of 1.25" diameter, schedule 40 PVC riser
1 slip-on end cap
1/10± bag NSF Sand
1/10± bag Bentonite granules

Well No. MW-10

MONITOR WELL CONSTRUCTION LOG

C.T. MALE ASSOCIATES, P.C.

Project Number 06.6448

Project Name Old Champlain Mill Phase II ESA

Well No. MW-10 Boring No. GP-10

Town/City Village of Whitehall

County Washington State New York

Installation Date(s) 11/16/06

Drilling Contractor ADT, Inc.

Drilling Method Van Mounted Geoprobe

Water Depth From Top of Riser 4.12 ft 11/17/06 (Date)

Drilling Inspector Present Dan Achtyl

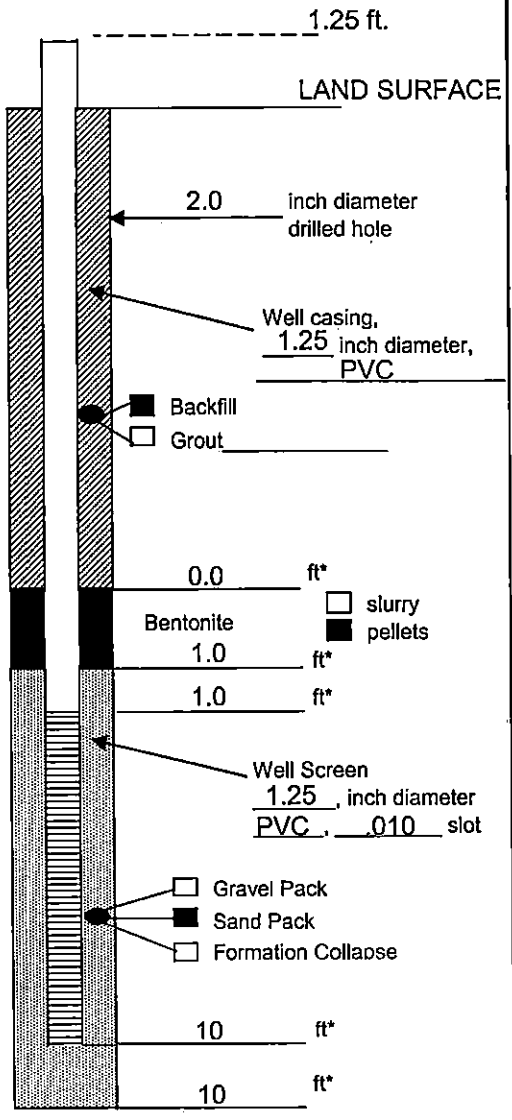

* Depth below land surface.

Notes:

9' of 1.25" diameter, schedule 40, 0.010 slot PVC well screen
2.25' of 1.25" diameter, schedule 40 PVC riser
1 slip-on end cap
1/10± bag NSF Sand
1/10± bag Bentonite granules

Well No. MW-11

MONITOR WELL CONSTRUCTION LOG

C.T. MALE ASSOCIATES, P.C.

Project Number 06.6448

Project Name Old Champlain Mill Phase II ESA

Well No. MW-11 Boring No. GP-11

Town/City Village of Whitehall

County Washington State New York

Installation Date(s) 11/16/06

Drilling Contractor ADT, Inc.

Drilling Method Van Mounted Geoprobe

Water Depth From Top of Riser 4.35 ft 11/17/06 (Date)

Drilling Inspector Present Dan Achtyl

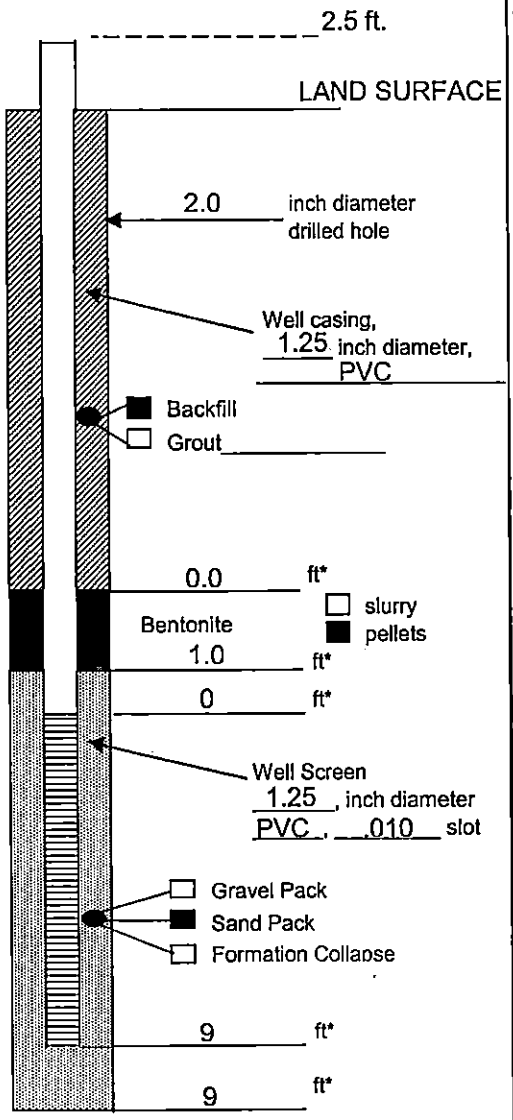

*Depth below land surface.

Notes:

9' of 1.25" diameter, schedule 40, 0.010 slot PVC well screen
2.5' of 1.25" diameter, schedule 40 PVC riser
1 slip-on end cap
1/10± bag NSF Sand
1/10± bag Bentonite granules

Well No. MW-12

MONITOR WELL CONSTRUCTION LOG

C.T. MALE ASSOCIATES, P.C.

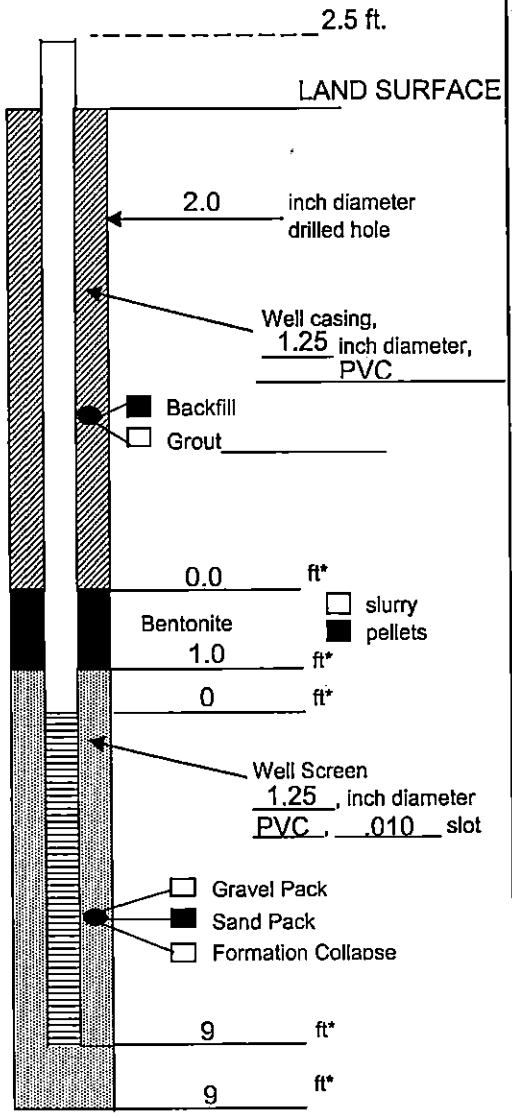

* Depth below land surface.

Project Number 06.6448

Project Name Old Champlain Mill Phase II ESA

Well No. MW-12 Boring No. GP-12

Town/City Village of Whitehall

County Washington State New York

Installation Date(s) 11/16/06

Drilling Contractor ADT, Inc.

Drilling Method Van Mounted Geoprobe

Water Depth From Top of Riser 4.30 ft 11/17/06 (Date)

Drilling Inspector Present Dan Achtyl

Notes:

9' of 1.25" diameter, schedule 40, 0.010 slot PVC well screen
2.5' of 1.25" diameter, schedule 40 PVC riser
1 slip-on end cap
1/10± bag NSF Sand
1/10± bag Bentonite granules

APPENDIX C

Organic Vapor Headspace Analysis Logs

ORGANIC VAPOR HEADSPACE ANALYSIS LOG

PROJECT: Old Champlain Mill		PROJECT #: 06.6448	PAGE 1 OF 3
CLIENT: Donnelly Industries, Inc.			DATE
LOCATION: Village of Whitehall, Washington County, New York			COLLECTED: 11/16/06
INSTRUMENT USED: Mini Rae 2000	LAMP 10.6	EV	DATE
DATE INSTRUMENT CALIBRATED: 11/16/06		BY: DA	ANALYZED: 11/16/06
TEMPERATURE OF SOIL: Ambient			ANALYST: DA

EXPLORATION NUMBER	SAMPLE NUMBER	DEPTH (FT.)	SAMPLE TYPE	SAMPLE READING (PPM)**	BACKGROUND READING (PPM)**	REMARKS
MW-2	1	0-2	Soil	0.7	0.5	No odor/No staining
MW-2	1	2-4	Soil	0.8	0.6	No odor/No staining
MW-2	2	4-6	Soil	1.3	1.1	No odor/No staining
MW-2	2	6-8	Soil	1.7	1.6	No odor/No staining
MW-1	1	0-2	Soil	1.8	1.6	No odor/No staining
MW-1	1	2-4	Soil	2.3	1.6	No odor/No staining
MW-2	2	4-6	Soil	2.0	1.6	No odor/No staining
MW-2	2	6-8	Soil	1.9	1.6	No odor/No staining
MW-3	3	8-10	Soil	1.8	1.7	No odor/No staining
MW-7	1	0-2	Soil	2.1	1.7	No odor/No staining
MW-7	1	2-4	Soil	2.0	1.7	No odor/No staining
MW-7	2	4-6	Soil	2.6	1.6	No odor/No staining
MW-7	2	6-8	Soil	2.5	1.9	No odor/No staining
MW-7	2	8-10	Soil	2.0	1.7	No odor/No staining
MW-6	1	0-2	Soil	2.0	1.7	No odor/No staining
MW-6	1	2-4	Soil	2.3	1.7	No odor/No staining
MW-6	2	4-6	Soil	2.0	1.6	No odor/No staining
MW-6	2	6-8	Soil	2.3	1.6	No odor/No staining
MW-6	3	8-10	Soil	2.1	1.7	No odor/No staining

*Instrument was calibrated in accordance with manufacturer's recommended procedure using a calibration gas supplied by the manufacturer.
**PPM represents concentration of detectable volatile and gaseous compounds in parts per million of air.
***Due to poor sample recovery the sample is not sufficient enough to specify which portion of the recovered sample interval was collected .

ORGANIC VAPOR HEADSPACE ANALYSIS LOG

PROJECT: Old Champlain Mill	PROJECT #: 06.6448	PAGE 2 OF 3
CLIENT: Donnelly Industries, Inc.		DATE
LOCATION: Village of Whitehall, Washington County, New York		COLLECTED: 11/16/06
INSTRUMENT USED: Mini Rae 2000 LAMP 10.6 EV		DATE
DATE INSTRUMENT CALIBRATED: 11/16/06 BY: DA		ANALYZED: 11/16/06
TEMPERATURE OF SOIL: Ambient		ANALYST: DA

EXPLORATION NUMBER	SAMPLE NUMBER	DEPTH (FT.)	SAMPLE TYPE	SAMPLE READING (PPM)**	BACKGROUND READING (PPM)**	REMARKS
MW-5	1	0-2	Soil	2.1	0.5	No odor/No staining
MW-5	1	2-4	Soil	2.2	0.6	No odor/No staining
MW-5	2	4-6	Soil	2.0	1.1	No odor/No staining
MW-5	2	6-8	Soil	2.0	1.6	No odor/No staining
MW-5	3	8-10	Soil	2.0	1.6	No odor/No staining
MW-10	1	0-2	Soil	2.4	1.6	No odor/No staining
MW-10	1	2-4	Soil	2.6	1.6	No odor/No staining
MW-10	2	4-6	Soil	2.4	1.6	No odor/No staining
MW-10	2	6-8	Soil	2.6	1.7	No odor/No staining
MW-10	3	8-10	Soil	2.6	1.7	No odor/No staining
MW-12	1	0-2	Soil	2.7	1.7	No odor/No staining
MW-12	1	2-4	Soil	2.6	1.6	No odor/No staining
MW-12	2	4-6	Soil	2.6	1.9	No odor/No staining
MW-12	2	6-8	Soil	2.7	1.7	No odor/No staining
MW-8	1	0-2	Soil	3.1	1.7	No odor/No staining
MW-8	1	2-4	Soil	2.9	1.6	No odor/No staining
MW-8	2	4-6	Soil	3.0	1.6	No odor/No staining
MW-8	2	6-8	Soil	2.8	1.7	No odor/No staining

*Instrument was calibrated in accordance with manufacturer's recommended procedure using a calibration gas supplied by the manufacturer.
**PPM represents concentration of detectable volatile and gaseous compounds in parts per million of air.
***Due to poor sample recovery the sample is not sufficient enough to specify which portion of the recovered sample interval was collected .

ORGANIC VAPOR HEADSPACE ANALYSIS LOG

PROJECT: Old Champlain Mill	PROJECT #: 06.6448	PAGE 3 OF 3
CLIENT: Donnelly Industries, Inc.		DATE
LOCATION: Village of Whitehall, Washington County, New York		COLLECTED: 11/16/06
INSTRUMENT USED: Mini Rae 2000 LAMP 10.6 EV		DATE
DATE INSTRUMENT CALIBRATED: 11/16/06 BY: DA		ANALYZED: 11/16/06
TEMPERATURE OF SOIL: Ambient		ANALYST: DA

EXPLORATION NUMBER	SAMPLE NUMBER	DEPTH (FT.)	SAMPLE TYPE	SAMPLE READING (PPM)**	BACKGROUND READING (PPM)**	REMARKS
MW-4	1	0-2	Soil	2.7	2.7	No odor/No staining
MW-4	1	2-4	Soil	3.1	2.7	No odor/No staining
MW-4	2	4-6	Soil	3.0	2.7	No odor/No staining
MW-4	2	6-8	Soil	3.1	2.7	No odor/No staining
MW-3	1	0-2	Soil	4.5	2.8	No odor/No staining
MW-3	1	2-4	Soil	3.1	2.8	No odor/No staining
MW-3	2	4-6	Soil	3.1	2.7	No odor/No staining
MW-3	2	6-8	Soil	3.1	2.8	No odor/No staining
MW-11	1	0-2	Soil	2.8	2.7	No odor/No staining
MW-11	1	2-4	Soil	2.8	2.7	No odor/No staining
MW-11	2	4-6	Soil	2.7	2.6	No odor/No staining
MW-11	2	6-8	Soil	2.8	2.6	No odor/No staining

*Instrument was calibrated in accordance with manufacturer's recommended procedure using a calibration gas supplied by the manufacturer.
**PPM represents concentration of detectable volatile and gaseous compounds in parts per million of air.
***Due to poor sample recovery the sample is not sufficient enough to specify which portion of the recovered sample interval was collected .

ORGANIC VAPOR HEADSPACE ANALYSIS LOG

PROJECT: Old Champlain Mill	PROJECT #: 06.6448	PAGE 1 OF 1
CLIENT: Donnelly Industries, Inc.		DATE
LOCATION: Village of Whitehall, Washington County, New York		COLLECTED: 11/16/06
INSTRUMENT USED: Mini Rae 2000 LAMP 10.6 EV		DATE
DATE INSTRUMENT CALIBRATED: 11/17/06 BY: DA		ANALYZED: 11/17/06
TEMPERATURE OF SOIL: Ambient		ANALYST: DA

EXPLORATION NUMBER	SAMPLE NUMBER	DEPTH (FT.)	SAMPLE TYPE	SAMPLE READING (PPM)**	BACKGROUND READING (PPM)**	REMARKS
B-13	1	0-2	Soil	0.1	0.0	No odor/No staining
B-13	1	2-4	Soil	0.2	0.0	No odor/No staining
B-13	2	4-6	Soil	0.0	0.0	No odor/No staining
B-13	2	6-8	Soil	0.0	0.0	No odor/No staining
B-13	3	8-10	Soil	0.1	0.0	No odor/No staining
B-13	3	10-12	Soil	0.2	0.0	No odor/No staining
B-14	1	0-2	Soil	0.0	0.0	No odor/No staining
B-14	1	2-4	Soil	0.0	0.0	No odor/No staining
B-14	2	4-6	Soil	0.0	0.0	No odor/No staining
B-14	2	6-8	Soil	0.1	0.0	No odor/No staining
B-14	3	8-10	Soil	0.2	0.0	No odor/No staining
B-14	3	10-12	Soil	0.1	0.0	No odor/No staining

*Instrument was calibrated in accordance with manufacturer's recommended procedure using a calibration gas supplied by the manufacturer.
**PPM represents concentration of detectable volatile and gaseous compounds in parts per million of air.
***Due to poor sample recovery the sample is not sufficient enough to specify which portion of the recovered sample interval was collected .

APPENDIX D

Laboratory Analysis Report

PHOENIX
Environmental Laboratories, Inc.

RECEIVED
DEC - 4 2006

Friday, December 01, 2006

CT Male Associates
50 Centurv Hill Drive
Latham NY 12110

Attention: Ms Aimee Gates

Sample ID#: AH70835-70846 W/AH70890

This laboratory is in compliance with the QA/QC procedure outlined in EPA 600/4-79-019, Handbook for Analytical Quality in Water and Waste Water, March 1979, and SW846 QA/QC requirements of procedures used.

If you have any questions concerning this testing, please do not hesitate to contact Phoenix Client Services at ext. 200.

Sincerely yours,

Phyllis Shiller

Phyllis Shiller
Laboratory Director

CT Lab Registration #PH-0618
MA Lab Registration #MA-CT-007
NY Lab Registration #11301
RI Lab Registration #63
NH Lab Registration #213693-A,B
ME Lab Registration #CT-007
NJ Lab Registration #CT-003
PA Lab Registration #68-03530

PHOENIX

Environmental Laboratories, Inc.
587 East Middle Turnpike, P.O.Box 370, Manchester, CT 06040
Tel. (860) 645-1102 Fax (860) 645-0823

Analysis Report
November 30, 2006

FOR: Attn: Ms. Aimee Gates
CT Male Associates, PC
50 Century Hill Drive
Latham, NY 12110

Sample Information		Custody Information		Date	Time
Matrix:	WATER	Collected by:		11/16/06	8:00
Location Code:	CT-MALE	Received by:	LP	11/20/06	9:00
Rush Request:		Analyzed by:	see "By" below		
P.O.#:	06-6448				

SDG I.D.: GAH70835
Phoenix I.D.: AH70835

Laboratory Data

Client ID: OLD CHAMPLAIN MILL SW-9

Parameter	Result	RL	Units	Date	Time	By	Reference
Silver	< 0.001	0.001	mg/L	11/30/06		EKT	6010/200.7
Arsenic	< 0.004	0.004	mg/L	11/30/06		EKT	6010/200.7
Barium	0.047	0.002	mg/L	11/30/06		EKT	6010/200.7
Cadmium	< 0.001	0.001	mg/L	11/30/06		EKT	6010/200.7
Chromium	0.002	0.001	mg/L	11/30/06		EKT	6010/200.7
Mercury	< 0.0002	0.0002	mg/L	11/21/06		RS	7470/E245.1
Lead (Furnace)	0.002	0.001	mg/L	11/21/06		RS	7421/S3113B
Selenium	< 0.01	0.01	mg/L	11/30/06		EKT	6010/200.7
Mercury Digestion	Completed			11/21/06		D	E245.1
PCB Extraction	Completed			11/20/06		O	SW3510/3520
Total Metals Digestion	Completed			11/20/06		AG	
Polychlorinated Biphenyls							
PCB-1016	ND	0.5	ug/L	11/21/06		MH	608/ 8082
PCB-1221	ND	0.5	ug/L	11/21/06		MH	608/ 8082
PCB-1232	ND	0.5	ug/L	11/21/06		MH	608/ 8082
PCB-1242	ND	0.5	ug/L	11/21/06		MH	608/ 8082
PCB-1248	ND	0.5	ug/L	11/21/06		MH	608/ 8082
PCB-1254	ND	0.5	ug/L	11/21/06		MH	608/ 8082
PCB-1260	ND	0.5	ug/L	11/21/06		MH	608/ 8082
PCB-1262	ND	0.5	ug/L	11/21/06		MH	608/ 8082
PCB-1268	ND	0.5	ug/L	11/21/06		MH	608/ 8082
QA/QC Surrogates							
% DCBP (Surrogate Rec)	84		%	11/21/06		MH	608/ 8082
% TCMX (Surrogate Rec)	92		%	11/21/06		MH	608/ 8082

Client ID: OLD CHAMPLAIN MILL SW-9 Phoenix I.D.: AH70835

Parameter	Result	RL	Units	Date	Time	By	Reference
Volatiles							
1,1,1,2-Tetrachloroethane	ND	5	ug/L	11/20/06		R/J	SW8260
1,1,1-Trichloroethane	ND	5	ug/L	11/20/06		R/J	SW8260
1,1,2,2-Tetrachloroethane	ND	5	ug/L	11/20/06		R/J	SW8260
1,1,2-Trichloroethane	ND	5	ug/L	11/20/06		R/J	SW8260
1,1-Dichloroethane	ND	5	ug/L	11/20/06		R/J	SW8260
1,1-Dichloroethene	ND	5	ug/L	11/20/06		R/J	SW8260
1,1-Dichloropropene	ND	5	ug/L	11/20/06		R/J	SW8260
1,2,3-Trichlorobenzene	ND	5	ug/L	11/20/06		R/J	SW8260
1,2,3-Trichloropropane	ND	5	ug/L	11/20/06		R/J	SW8260
1,2,4-Trichlorobenzene	ND	5	ug/L	11/20/06		R/J	SW8260
1,2,4-Trimethylbenzene	ND	5	ug/L	11/20/06		R/J	SW8260
1,2-Dibromo-3-chloropropane	ND	5	ug/L	11/20/06		R/J	SW8260
1,2-Dichlorobenzene	ND	5	ug/L	11/20/06		R/J	SW8260
1,2-Dichloroethane	ND	5	ug/L	11/20/06		R/J	SW8260
1,2-Dichloropropane	ND	5	ug/L	11/20/06		R/J	SW8260
1,3,5-Trimethylbenzene	ND	5	ug/L	11/20/06		R/J	SW8260
1,3-Dichlorobenzene	ND	5	ug/L	11/20/06		R/J	SW8260
1,3-Dichloropropane	ND	5	ug/L	11/20/06		R/J	SW8260
1,4-Dichlorobenzene	ND	5	ug/L	11/20/06		R/J	SW8260
2,2-Dichloropropane	ND	5	ug/L	11/20/06		R/J	SW8260
2-Chlorotoluene	ND	5	ug/L	11/20/06		R/J	SW8260
2-Hexanone	ND	25	ug/L	11/20/06		R/J	SW8260
2-Isopropyltoluene	ND	5	ug/L	11/20/06		R/J	SW8260
4-Chlorotoluene	ND	5	ug/L	11/20/06		R/J	SW8260
4-Methyl-2-pentanone	ND	25	ug/L	11/20/06		R/J	SW8260
Acetone	ND	50	ug/L	11/20/06		R/J	SW8260
Acrylonitrile	ND	10	ug/L	11/20/06		R/J	SW8260
Benzene	ND	5	ug/L	11/20/06		R/J	SW8260
Bromobenzene	ND	5	ug/L	11/20/06		R/J	SW8260
Bromochloromethane	ND	5	ug/L	11/20/06		R/J	SW8260
Bromodichloromethane	ND	5	ug/L	11/20/06		R/J	SW8260
Bromoform	ND	5	ug/L	11/20/06		R/J	SW8260
Bromomethane	ND	5	ug/L	11/20/06		R/J	SW8260
Carbon Disulfide	ND	5	ug/L	11/20/06		R/J	SW8260
Carbon tetrachloride	ND	5	ug/L	11/20/06		R/J	SW8260
Chlorobenzene	ND	5	ug/L	11/20/06		R/J	SW8260
Chloroethane	ND	5	ug/L	11/20/06		R/J	SW8260
Chloroform	ND	5	ug/L	11/20/06		R/J	SW8260
Chloromethane	ND	5	ug/L	11/20/06		R/J	SW8260
cis-1,2-Dichloroethene	ND	5	ug/L	11/20/06		R/J	SW8260
cis-1,3-Dichloropropene	ND	5	ug/L	11/20/06		R/J	SW8260
Dibromochloromethane	ND	5	ug/L	11/20/06		R/J	SW8260

Client ID: OLD CHAMPLAIN MILL SW-9 Phoenix I.D.: AH70835

Parameter	Result	RL	Units	Date	Time	By	Reference
Dibromoethane	ND	5	ug/L	11/20/06		R/J	SW8260
Dibromomethane	ND	5	ug/L	11/20/06		R/J	SW8260
Dichlorodifluoromethane	ND	5	ug/L	11/20/06		R/J	SW8260
Ethylbenzene	ND	5	ug/L	11/20/06		R/J	SW8260
Hexachlorobutadiene	ND	5	ug/L	11/20/06		R/J	SW8260
Isopropylbenzene	ND	5	ug/L	11/20/06		R/J	SW8260
m&p-Xylene	ND	5	ug/L	11/20/06		R/J	SW8260
Methyl Ethyl Ketone	ND	60	ug/L	11/20/06		R/J	SW8260
Methyl t-butyl ether (MTBE)	ND	10	ug/L	11/20/06		R/J	SW8260
Methylene chloride	ND	5	ug/L	11/20/06		R/J	SW8260
n-Butylbenzene	ND	5	ug/L	11/20/06		R/J	SW8260
n-Propylbenzene	ND	5	ug/L	11/20/06		R/J	SW8260
Naphthalene	ND	5	ug/L	11/20/06		R/J	SW8260
o-Xylene	ND	5	ug/L	11/20/06		R/J	SW8260
p-Isopropyltoluene	ND	5	ug/L	11/20/06		R/J	SW8260
sec-Butylbenzene	ND	5	ug/L	11/20/06		R/J	SW8260
Styrene	ND	5	ug/L	11/20/06		R/J	SW8260
tert-Butylbenzene	ND	5	ug/L	11/20/06		R/J	SW8260
Tetrachloroethene	ND	5	ug/L	11/20/06		R/J	SW8260
Tetrahydrofuran (THF)	ND	10	ug/L	11/20/06		R/J	SW8260
Toluene	ND	5	ug/L	11/20/06		R/J	SW8260
Total Xylenes	ND	5	ug/L	11/20/06		R/J	SW8260
trans-1,2-Dichloroethene	ND	5	ug/L	11/20/06		R/J	SW8260
trans-1,3-Dichloropropene	ND	5	ug/L	11/20/06		R/J	SW8260
trans-1,4-dichloro-2-butene	ND	10	ug/L	11/20/06		R/J	SW8260
Trichloroethene	ND	5	ug/L	11/20/06		R/J	SW8260
Trichlorofluoromethane	ND	5	ug/L	11/20/06		R/J	SW8260
Trichlorotrifluoroethane	ND	5	ug/L	11/20/06		R/J	SW8260
Vinyl chloride	ND	5	ug/L	11/20/06		R/J	SW8260
QA/QC Surrogates							
% 1,2-dichlorobenzene-d4	95		%	11/20/06		R/J	SW8260
% Bromofluorobenzene	96		%	11/20/06		R/J	SW8260
% Dibromofluoromethane	93		%	11/20/06		R/J	SW8260
% Toluene-d8	97		%	11/20/06		R/J	SW8260

Comments:

If there are any questions regarding this data, please call Phoenix Client Services at extension 200.
ND=Not detected BDL=Below Detection Limit RL=Reporting Limit

Phyllis Shiller, Laboratory Director
November 30, 2006

PHOENIX

Environmental Laboratories, Inc.
587 East Middle Turnpike, P.O.Box 370, Manchester, CT 06040
Tel. (860) 645-1102 Fax (860) 645-0823

ACCREDITED IN ACCORDANCE WITH nelac

Analysis Report

November 30, 2006

FOR: Attn: Ms. Aimee Gates
CT Male Associates, PC
50 Century Hill Drive
Latham, NY 12110

Sample Information		Custody Information		Date	Time
Matrix:	WATER	Collected by:		11/17/06	10:15
Location Code:	CT-MALE	Received by:	LP	11/20/06	9:00
Rush Request:		Analyzed by:	see "By" below		
P.O.#:	06-6448				

SDG I.D.: GAH70835
Phoenix I.D.: AH70836

Laboratory Data

Client ID: OLD CHAMPLAIN MILL MW-1

Parameter	Result	RL	Units	Date	Time	By	Reference
Silver	< 0.001	0.001	mg/L	11/30/06		EKT	6010/200.7
Arsenic	< 0.004	0.004	mg/L	11/30/06		EKT	6010/200.7
Barium	0.083	0.002	mg/L	11/30/06		EKT	6010/200.7
Cadmium	< 0.001	0.001	mg/L	11/30/06		EKT	6010/200.7
Chromium	0.009	0.001	mg/L	11/30/06		EKT	6010/200.7
Mercury	< 0.0002	0.0002	mg/L	11/21/06		RS	7470/E245.1
Lead (Furnace)	0.009	0.001	mg/L	11/21/06		RS	7421/S3113B
Selenium	< 0.01	0.01	mg/L	11/30/06		EKT	6010/200.7
Mercury Digestion	Completed			11/21/06		D	E245.1
PCB Extraction	Completed			11/20/06		O	SW3510/3520
Total Metals Digestion	Completed			11/20/06		AG	
Polychlorinated Biphenyls							
PCB-1016	ND	0.5	ug/L	11/21/06		MH	608/ 8082
PCB-1221	ND	0.5	ug/L	11/21/06		MH	608/ 8082
PCB-1232	ND	0.5	ug/L	11/21/06		MH	608/ 8082
PCB-1242	ND	0.5	ug/L	11/21/06		MH	608/ 8082
PCB-1248	ND	0.5	ug/L	11/21/06		MH	608/ 8082
PCB-1254	ND	0.5	ug/L	11/21/06		MH	608/ 8082
PCB-1260	ND	0.5	ug/L	11/21/06		MH	608/ 8082
PCB-1262	ND	0.5	ug/L	11/21/06		MH	608/ 8082
PCB-1268	ND	0.5	ug/L	11/21/06		MH	608/ 8082
QA/QC Surrogates							
% DCBP (Surrogate Rec)	68		%	11/21/06		MH	608/ 8082
% TCMX (Surrogate Rec)	74		%	11/21/06		MH	608/ 8082

Client ID: OLD CHAMPLAIN MILL MW-1 Phoenix I.D.: AH70836

Parameter	Result	RL	Units	Date	Time	By	Reference
Volatiles							
1,1,1,2-Tetrachloroethane	ND	5	ug/L	11/20/06		R/J	SW8260
1,1,1-Trichloroethane	ND	5	ug/L	11/20/06		R/J	SW8260
1,1,2,2-Tetrachloroethane	ND	5	ug/L	11/20/06		R/J	SW8260
1,1,2-Trichloroethane	ND	5	ug/L	11/20/06		R/J	SW8260
1,1-Dichloroethane	ND	5	ug/L	11/20/06		R/J	SW8260
1,1-Dichloroethene	ND	5	ug/L	11/20/06		R/J	SW8260
1,1-Dichloropropene	ND	5	ug/L	11/20/06		R/J	SW8260
1,2,3-Trichlorobenzene	ND	5	ug/L	11/20/06		R/J	SW8260
1,2,3-Trichloropropane	ND	5	ug/L	11/20/06		R/J	SW8260
1,2,4-Trichlorobenzene	ND	5	ug/L	11/20/06		R/J	SW8260
1,2,4-Trimethylbenzene	ND	5	ug/L	11/20/06		R/J	SW8260
1,2-Dibromo-3-chloropropane	ND	5	ug/L	11/20/06		R/J	SW8260
1,2-Dichlorobenzene	ND	5	ug/L	11/20/06		R/J	SW8260
1,2-Dichloroethane	ND	5	ug/L	11/20/06		R/J	SW8260
1,2-Dichloropropane	ND	5	ug/L	11/20/06		R/J	SW8260
1,3,5-Trimethylbenzene	ND	5	ug/L	11/20/06		R/J	SW8260
1,3-Dichlorobenzene	ND	5	ug/L	11/20/06		R/J	SW8260
1,3-Dichloropropane	ND	5	ug/L	11/20/06		R/J	SW8260
1,4-Dichlorobenzene	ND	5	ug/L	11/20/06		R/J	SW8260
2,2-Dichloropropane	ND	5	ug/L	11/20/06		R/J	SW8260
2-Chlorotoluene	ND	5	ug/L	11/20/06		R/J	SW8260
2-Hexanone	ND	25	ug/L	11/20/06		R/J	SW8260
2-Isopropyltoluene	ND	5	ug/L	11/20/06		R/J	SW8260
4-Chlorotoluene	ND	5	ug/L	11/20/06		R/J	SW8260
4-Methyl-2-pentanone	ND	25	ug/L	11/20/06		R/J	SW8260
Acetone	ND	50	ug/L	11/20/06		R/J	SW8260
Acrylonitrile	ND	10	ug/L	11/20/06		R/J	SW8260
Benzene	ND	5	ug/L	11/20/06		R/J	SW8260
Bromobenzene	ND	5	ug/L	11/20/06		R/J	SW8260
Bromochloromethane	ND	5	ug/L	11/20/06		R/J	SW8260
Bromodichloromethane	ND	5	ug/L	11/20/06		R/J	SW8260
Bromoform	ND	5	ug/L	11/20/06		R/J	SW8260
Bromomethane	ND	5	ug/L	11/20/06		R/J	SW8260
Carbon Disulfide	ND	5	ug/L	11/20/06		R/J	SW8260
Carbon tetrachloride	ND	5	ug/L	11/20/06		R/J	SW8260
Chlorobenzene	ND	5	ug/L	11/20/06		R/J	SW8260
Chloroethane	ND	5	ug/L	11/20/06		R/J	SW8260
Chloroform	ND	5	ug/L	11/20/06		R/J	SW8260
Chloromethane	ND	5	ug/L	11/20/06		R/J	SW8260
cis-1,2-Dichloroethene	ND	5	ug/L	11/20/06		R/J	SW8260
cis-1,3-Dichloropropene	ND	5	ug/L	11/20/06		R/J	SW8260
Dibromochloromethane	ND	5	ug/L	11/20/06		R/J	SW8260

Client ID: OLD CHAMPLAIN MILL MW-1 Phoenix I.D.: AH70836

Parameter	Result	RL	Units	Date	Time	By	Reference
Dibromoethane	ND	5	ug/L	11/20/06		R/J	SW8260
Dibromomethane	ND	5	ug/L	11/20/06		R/J	SW8260
Dichlorodifluoromethane	ND	5	ug/L	11/20/06		R/J	SW8260
Ethylbenzene	ND	5	ug/L	11/20/06		R/J	SW8260
Hexachlorobutadiene	ND	5	ug/L	11/20/06		R/J	SW8260
Isopropylbenzene	ND	5	ug/L	11/20/06		R/J	SW8260
m&p-Xylene	ND	5	ug/L	11/20/06		R/J	SW8260
Methyl Ethyl Ketone	ND	60	ug/L	11/20/06		R/J	SW8260
Methyl t-butyl ether (MTBE)	ND	10	ug/L	11/20/06		R/J	SW8260
Methylene chloride	ND	5	ug/L	11/20/06		R/J	SW8260
n-Butylbenzene	ND	5	ug/L	11/20/06		R/J	SW8260
n-Propylbenzene	ND	5	ug/L	11/20/06		R/J	SW8260
Naphthalene	ND	5	ug/L	11/20/06		R/J	SW8260
o-Xylene	ND	5	ug/L	11/20/06		R/J	SW8260
p-Isopropyltoluene	ND	5	ug/L	11/20/06		R/J	SW8260
sec-Butylbenzene	ND	5	ug/L	11/20/06		R/J	SW8260
Styrene	ND	5	ug/L	11/20/06		R/J	SW8260
tert-Butylbenzene	ND	5	ug/L	11/20/06		R/J	SW8260
Tetrachloroethene	ND	5	ug/L	11/20/06		R/J	SW8260
Tetrahydrofuran (THF)	ND	10	ug/L	11/20/06		R/J	SW8260
Toluene	ND	5	ug/L	11/20/06		R/J	SW8260
Total Xylenes	ND	5	ug/L	11/20/06		R/J	SW8260
trans-1,2-Dichloroethene	ND	5	ug/L	11/20/06		R/J	SW8260
trans-1,3-Dichloropropene	ND	5	ug/L	11/20/06		R/J	SW8260
trans-1,4-dichloro-2-butene	ND	10	ug/L	11/20/06		R/J	SW8260
Trichloroethene	ND	5	ug/L	11/20/06		R/J	SW8260
Trichlorofluoromethane	ND	5	ug/L	11/20/06		R/J	SW8260
Trichlorotrifluoroethane	ND	5	ug/L	11/20/06		R/J	SW8260
Vinyl chloride	ND	5	ug/L	11/20/06		R/J	SW8260
QA/QC Surrogates							
% 1,2-dichlorobenzene-d4	98		%	11/20/06		R/J	SW8260
% Bromofluorobenzene	96		%	11/20/06		R/J	SW8260
% Dibromofluoromethane	92		%	11/20/06		R/J	SW8260
% Toluene-d8	100		%	11/20/06		R/J	SW8260

Comments:

If there are any questions regarding this data, please call Phoenix Client Services at extension 200.
ND=Not detected BDL=Below Detection Limit RL=Reporting Limit

Phyllis Shiller, Laboratory Director
November 30, 2006

PHOENIX

Environmental Laboratories, Inc.
587 East Middle Turnpike, P.O.Box 370, Manchester, CT 06040
Tel. (860) 645-1102 Fax (860) 645-0823

Analysis Report
November 30, 2006

FOR: Attn: Ms. Aimee Gates
CT Male Associates, PC
50 Century Hill Drive
Latham, NY 12110

Sample Information		Custody Information		Date	Time
Matrix:	WATER	Collected by:		11/17/06	8:40
Location Code:	CT-MALE	Received by:	LP	11/20/06	9:00
Rush Request:		Analyzed by:	see "By" below		
P.O.#:	06-6448				

SDG I.D.: GAH70835
Phoenix I.D.: AH70837

Laboratory Data

Client ID: OLD CHAMPLAIN MILL MW-2

Parameter	Result	RL	Units	Date	Time	By	Reference
Silver	< 0.001	0.001	mg/L	11/30/06		EKT	6010/200.7
Arsenic	0.005	0.004	mg/L	11/30/06		EKT	6010/200.7
Barium	0.068	0.002	mg/L	11/30/06		EKT	6010/200.7
Cadmium	< 0.001	0.001	mg/L	11/30/06		EKT	6010/200.7
Chromium	0.003	0.001	mg/L	11/30/06		EKT	6010/200.7
Mercury	< 0.0002	0.0002	mg/L	11/21/06		RS	7470/E245.1
Lead (Furnace)	0.007	0.001	mg/L	11/21/06		RS	7421/S3113B
Selenium	< 0.01	0.01	mg/L	11/30/06		EKT	6010/200.7
Mercury Digestion	Completed			11/21/06		D	E245.1
PCB Extraction	Completed			11/20/06		O	SW3510/3520
Total Metals Digestion	Completed			11/20/06		AG	
Polychlorinated Biphenyls							
PCB-1016	ND	0.5	ug/L	11/21/06		MH	608/ 8082
PCB-1221	ND	0.5	ug/L	11/21/06		MH	608/ 8082
PCB-1232	ND	0.5	ug/L	11/21/06		MH	608/ 8082
PCB-1242	ND	0.5	ug/L	11/21/06		MH	608/ 8082
PCB-1248	ND	0.5	ug/L	11/21/06		MH	608/ 8082
PCB-1254	ND	0.5	ug/L	11/21/06		MH	608/ 8082
PCB-1260	ND	0.5	ug/L	11/21/06		MH	608/ 8082
PCB-1262	ND	0.5	ug/L	11/21/06		MH	608/ 8082
PCB-1268	ND	0.5	ug/L	11/21/06		MH	608/ 8082
QA/QC Surrogates							
% DCBP (Surrogate Rec)	80		%	11/21/06		MH	608/ 8082
% TCMX (Surrogate Rec)	82		%	11/21/06		MH	608/ 8082

Client ID: OLD CHAMPLAIN MILL MW-2 Phoenix I.D.: AH70837

Parameter	Result	RL	Units	Date	Time	By	Reference
Volatiles							
1,1,1,2-Tetrachloroethane	ND	5	ug/L	11/20/06		R/J	SW8260
1,1,1-Trichloroethane	ND	5	ug/L	11/20/06		R/J	SW8260
1,1,2,2-Tetrachloroethane	ND	5	ug/L	11/20/06		R/J	SW8260
1,1,2-Trichloroethane	ND	5	ug/L	11/20/06		R/J	SW8260
1,1-Dichloroethane	ND	5	ug/L	11/20/06		R/J	SW8260
1,1-Dichloroethene	ND	5	ug/L	11/20/06		R/J	SW8260
1,1-Dichloropropene	ND	5	ug/L	11/20/06		R/J	SW8260
1,2,3-Trichlorobenzene	ND	5	ug/L	11/20/06		R/J	SW8260
1,2,3-Trichloropropane	ND	5	ug/L	11/20/06		R/J	SW8260
1,2,4-Trichlorobenzene	ND	5	ug/L	11/20/06		R/J	SW8260
1,2,4-Trimethylbenzene	ND	5	ug/L	11/20/06		R/J	SW8260
1,2-Dibromo-3-chloropropane	ND	5	ug/L	11/20/06		R/J	SW8260
1,2-Dichlorobenzene	ND	5	ug/L	11/20/06		R/J	SW8260
1,2-Dichloroethane	ND	5	ug/L	11/20/06		R/J	SW8260
1,2-Dichloropropane	ND	5	ug/L	11/20/06		R/J	SW8260
1,3,5-Trimethylbenzene	ND	5	ug/L	11/20/06		R/J	SW8260
1,3-Dichlorobenzene	ND	5	ug/L	11/20/06		R/J	SW8260
1,3-Dichloropropane	ND	5	ug/L	11/20/06		R/J	SW8260
1,4-Dichlorobenzene	ND	5	ug/L	11/20/06		R/J	SW8260
2,2-Dichloropropane	ND	5	ug/L	11/20/06		R/J	SW8260
2-Chlorotoluene	ND	5	ug/L	11/20/06		R/J	SW8260
2-Hexanone	ND	25	ug/L	11/20/06		R/J	SW8260
2-Isopropyltoluene	ND	5	ug/L	11/20/06		R/J	SW8260
4-Chlorotoluene	ND	5	ug/L	11/20/06		R/J	SW8260
4-Methyl-2-pentanone	ND	25	ug/L	11/20/06		R/J	SW8260
Acetone	ND	50	ug/L	11/20/06		R/J	SW8260
Acrylonitrile	ND	10	ug/L	11/20/06		R/J	SW8260
Benzene	ND	5	ug/L	11/20/06		R/J	SW8260
Bromobenzene	ND	5	ug/L	11/20/06		R/J	SW8260
Bromochloromethane	ND	5	ug/L	11/20/06		R/J	SW8260
Bromodichloromethane	ND	5	ug/L	11/20/06		R/J	SW8260
Bromoform	ND	5	ug/L	11/20/06		R/J	SW8260
Bromomethane	ND	5	ug/L	11/20/06		R/J	SW8260
Carbon Disulfide	ND	5	ug/L	11/20/06		R/J	SW8260
Carbon tetrachloride	ND	5	ug/L	11/20/06		R/J	SW8260
Chlorobenzene	ND	5	ug/L	11/20/06		R/J	SW8260
Chloroethane	ND	5	ug/L	11/20/06		R/J	SW8260
Chloroform	ND	5	ug/L	11/20/06		R/J	SW8260
Chloromethane	ND	5	ug/L	11/20/06		R/J	SW8260
cis-1,2-Dichloroethene	34	5	ug/L	11/20/06		R/J	SW8260
cis-1,3-Dichloropropene	ND	5	ug/L	11/20/06		R/J	SW8260
Dibromochloromethane	ND	5	ug/L	11/20/06		R/J	SW8260

Client ID: OLD CHAMPLAIN MILL MW-2 Phoenix I.D.: AH70837

Parameter	Result	RL	Units	Date	Time	By	Reference
Dibromoethane	ND	5	ug/L	11/20/06		R/J	SW8260
Dibromomethane	ND	5	ug/L	11/20/06		R/J	SW8260
Dichlorodifluoromethane	ND	5	ug/L	11/20/06		R/J	SW8260
Ethylbenzene	ND	5	ug/L	11/20/06		R/J	SW8260
Hexachlorobutadiene	ND	5	ug/L	11/20/06		R/J	SW8260
Isopropylbenzene	ND	5	ug/L	11/20/06		R/J	SW8260
m&p-Xylene	ND	5	ug/L	11/20/06		R/J	SW8260
Methyl Ethyl Ketone	ND	60	ug/L	11/20/06		R/J	SW8260
Methyl t-butyl ether (MTBE)	ND	10	ug/L	11/20/06		R/J	SW8260
Methylene chloride	ND	5	ug/L	11/20/06		R/J	SW8260
n-Butylbenzene	ND	5	ug/L	11/20/06		R/J	SW8260
n-Propylbenzene	ND	5	ug/L	11/20/06		R/J	SW8260
Naphthalene	ND	5	ug/L	11/20/06		R/J	SW8260
o-Xylene	ND	5	ug/L	11/20/06		R/J	SW8260
p-Isopropyltoluene	ND	5	ug/L	11/20/06		R/J	SW8260
sec-Butylbenzene	ND	5	ug/L	11/20/06		R/J	SW8260
Styrene	ND	5	ug/L	11/20/06		R/J	SW8260
tert-Butylbenzene	ND	5	ug/L	11/20/06		R/J	SW8260
Tetrachloroethene	ND	5	ug/L	11/20/06		R/J	SW8260
Tetrahydrofuran (THF)	ND	10	ug/L	11/20/06		R/J	SW8260
Toluene	ND	5	ug/L	11/20/06		R/J	SW8260
Total Xylenes	ND	5	ug/L	11/20/06		R/J	SW8260
trans-1,2-Dichloroethene	ND	5	ug/L	11/20/06		R/J	SW8260
trans-1,3-Dichloropropene	ND	5	ug/L	11/20/06		R/J	SW8260
trans-1,4-dichloro-2-butene	ND	10	ug/L	11/20/06		R/J	SW8260
Trichloroethene	13	5	ug/L	11/20/06		R/J	SW8260
Trichlorofluoromethane	ND	5	ug/L	11/20/06		R/J	SW8260
Trichlorotrifluoroethane	ND	5	ug/L	11/20/06		R/J	SW8260
Vinyl chloride	ND	5	ug/L	11/20/06		R/J	SW8260
QA/QC Surrogates							
% 1,2-dichlorobenzene-d4	98		%	11/20/06		R/J	SW8260
% Bromofluorobenzene	91		%	11/20/06		R/J	SW8260
% Dibromofluoromethane	97		%	11/20/06		R/J	SW8260
% Toluene-d8	99		%	11/20/06		R/J	SW8260

Comments:

If there are any questions regarding this data, please call Phoenix Client Services at extension 200.
ND=Not detected BDL=Below Detection Limit RL=Reporting Limit

Phyllis Shiller, Laboratory Director
November 30, 2006

PHOENIX

Environmental Laboratories, Inc.
587 East Middle Turnpike, P.O.Box 370, Manchester, CT 06040
Tel. (860) 645-1102 Fax (860) 645-0823

ACCREDITED IN ACCORDANCE WITH nelac

Analysis Report

November 30, 2006

FOR: Attn: Ms. Aimee Gates
CT Male Associates, PC
50 Century Hill Drive
Latham, NY 12110

Sample Information		Custody Information		Date	Time
Matrix:	WATER	Collected by:		11/17/06	14:30
Location Code:	CT-MALE	Received by:	LP	11/20/06	9:00
Rush Request:		Analyzed by:	see "By" below		
P.O.#:	06-6448				

SDG I.D.: GAH70835
Phoenix I.D.: AH70838

Laboratory Data

Client ID: OLD CHAMPLAIN MILL MW-3

Parameter	Result	RL	Units	Date	Time	By	Reference
Silver	0.001	0.001	mg/L	11/30/06		EKT	6010/200.7
Arsenic	0.012	0.004	mg/L	11/30/06		EKT	6010/200.7
Barium	0.454	0.002	mg/L	11/30/06		EKT	6010/200.7
Cadmium	< 0.001	0.001	mg/L	11/30/06		EKT	6010/200.7
Chromium	0.063	0.001	mg/L	11/30/06		EKT	6010/200.7
Mercury	0.0005	0.0002	mg/L	11/21/06		RS	7470/E245.1
Lead (Furnace)	0.201	0.001	mg/L	11/21/06		RS	7421/S3113B
Selenium	< 0.01	0.01	mg/L	11/30/06		EKT	6010/200.7
Mercury Digestion	Completed			11/21/06		D	E245.1
PCB Extraction	Completed			11/20/06		O	SW3510/3520
Total Metals Digestion	Completed			11/20/06		AG	
Polychlorinated Biphenyls							
PCB-1016	ND	0.5	ug/L	11/21/06		MH	608/ 8082
PCB-1221	ND	0.5	ug/L	11/21/06		MH	608/ 8082
PCB-1232	ND	0.5	ug/L	11/21/06		MH	608/ 8082
PCB-1242	ND	0.5	ug/L	11/21/06		MH	608/ 8082
PCB-1248	ND	0.5	ug/L	11/21/06		MH	608/ 8082
PCB-1254	ND	0.5	ug/L	11/21/06		MH	608/ 8082
PCB-1260	ND	0.5	ug/L	11/21/06		MH	608/ 8082
PCB-1262	ND	0.5	ug/L	11/21/06		MH	608/ 8082
PCB-1268	ND	0.5	ug/L	11/21/06		MH	608/ 8082
QA/QC Surrogates							
% DCBP (Surrogate Rec)	37		%	11/21/06		MH	608/ 8082
% TCMX (Surrogate Rec)	77		%	11/21/06		MH	608/ 8082

Client ID: OLD CHAMPLAIN MILL MW-3 Phoenix I.D.: AH70838

Parameter	Result	RL	Units	Date	Time	By	Reference
Volatiles							
1,1,1,2-Tetrachloroethane	ND	5	ug/L	11/20/06		R/J	SW8260
1,1,1-Trichloroethane	ND	5	ug/L	11/20/06		R/J	SW8260
1,1,2,2-Tetrachloroethane	ND	5	ug/L	11/20/06		R/J	SW8260
1,1,2-Trichloroethane	ND	5	ug/L	11/20/06		R/J	SW8260
1,1-Dichloroethane	ND	5	ug/L	11/20/06		R/J	SW8260
1,1-Dichloroethene	ND	5	ug/L	11/20/06		R/J	SW8260
1,1-Dichloropropene	ND	5	ug/L	11/20/06		R/J	SW8260
1,2,3-Trichlorobenzene	ND	5	ug/L	11/20/06		R/J	SW8260
1,2,3-Trichloropropane	ND	5	ug/L	11/20/06		R/J	SW8260
1,2,4-Trichlorobenzene	ND	5	ug/L	11/20/06		R/J	SW8260
1,2,4-Trimethylbenzene	ND	5	ug/L	11/20/06		R/J	SW8260
1,2-Dibromo-3-chloropropane	ND	5	ug/L	11/20/06		R/J	SW8260
1,2-Dichlorobenzene	ND	5	ug/L	11/20/06		R/J	SW8260
1,2-Dichloroethane	ND	5	ug/L	11/20/06		R/J	SW8260
1,2-Dichloropropane	ND	5	ug/L	11/20/06		R/J	SW8260
1,3,5-Trimethylbenzene	ND	5	ug/L	11/20/06		R/J	SW8260
1,3-Dichlorobenzene	ND	5	ug/L	11/20/06		R/J	SW8260
1,3-Dichloropropane	ND	5	ug/L	11/20/06		R/J	SW8260
1,4-Dichlorobenzene	ND	5	ug/L	11/20/06		R/J	SW8260
2,2-Dichloropropane	ND	5	ug/L	11/20/06		R/J	SW8260
2-Chlorotoluene	ND	5	ug/L	11/20/06		R/J	SW8260
2-Hexanone	ND	25	ug/L	11/20/06		R/J	SW8260
2-Isopropyltoluene	ND	5	ug/L	11/20/06		R/J	SW8260
4-Chlorotoluene	ND	5	ug/L	11/20/06		R/J	SW8260
4-Methyl-2-pentanone	ND	25	ug/L	11/20/06		R/J	SW8260
Acetone	ND	50	ug/L	11/20/06		R/J	SW8260
Acrylonitrile	ND	10	ug/L	11/20/06		R/J	SW8260
Benzene	ND	5	ug/L	11/20/06		R/J	SW8260
Bromobenzene	ND	5	ug/L	11/20/06		R/J	SW8260
Bromochloromethane	ND	5	ug/L	11/20/06		R/J	SW8260
Bromodichloromethane	ND	5	ug/L	11/20/06		R/J	SW8260
Bromoform	ND	5	ug/L	11/20/06		R/J	SW8260
Bromomethane	ND	5	ug/L	11/20/06		R/J	SW8260
Carbon Disulfide	ND	5	ug/L	11/20/06		R/J	SW8260
Carbon tetrachloride	ND	5	ug/L	11/20/06		R/J	SW8260
Chlorobenzene	ND	5	ug/L	11/20/06		R/J	SW8260
Chloroethane	ND	5	ug/L	11/20/06		R/J	SW8260
Chloroform	ND	5	ug/L	11/20/06		R/J	SW8260
Chloromethane	ND	5	ug/L	11/20/06		R/J	SW8260
cis-1,2-Dichloroethene	ND	5	ug/L	11/20/06		R/J	SW8260
cis-1,3-Dichloropropene	ND	5	ug/L	11/20/06		R/J	SW8260
Dibromochloromethane	ND	5	ug/L	11/20/06		R/J	SW8260

Client ID: OLD CHAMPLAIN MILL MW-3 Phoenix I.D.: AH70838

Parameter	Result	RL	Units	Date	Time	By	Reference
Dibromoethane	ND	5	ug/L	11/20/06		R/J	SW8260
Dibromomethane	ND	5	ug/L	11/20/06		R/J	SW8260
Dichlorodifluoromethane	ND	5	ug/L	11/20/06		R/J	SW8260
Ethylbenzene	ND	5	ug/L	11/20/06		R/J	SW8260
Hexachlorobutadiene	ND	5	ug/L	11/20/06		R/J	SW8260
Isopropylbenzene	ND	5	ug/L	11/20/06		R/J	SW8260
m&p-Xylene	ND	5	ug/L	11/20/06		R/J	SW8260
Methyl Ethyl Ketone	ND	60	ug/L	11/20/06		R/J	SW8260
Methyl t-butyl ether (MTBE)	ND	10	ug/L	11/20/06		R/J	SW8260
Methylene chloride	ND	5	ug/L	11/20/06		R/J	SW8260
n-Butylbenzene	ND	5	ug/L	11/20/06		R/J	SW8260
n-Propylbenzene	ND	5	ug/L	11/20/06		R/J	SW8260
Naphthalene	ND	5	ug/L	11/20/06		R/J	SW8260
o-Xylene	ND	5	ug/L	11/20/06		R/J	SW8260
p-Isopropyltoluene	ND	5	ug/L	11/20/06		R/J	SW8260
sec-Butylbenzene	ND	5	ug/L	11/20/06		R/J	SW8260
Styrene	ND	5	ug/L	11/20/06		R/J	SW8260
tert-Butylbenzene	ND	5	ug/L	11/20/06		R/J	SW8260
Tetrachloroethene	ND	5	ug/L	11/20/06		R/J	SW8260
Tetrahydrofuran (THF)	ND	10	ug/L	11/20/06		R/J	SW8260
Toluene	ND	5	ug/L	11/20/06		R/J	SW8260
Total Xylenes	ND	5	ug/L	11/20/06		R/J	SW8260
trans-1,2-Dichloroethene	ND	5	ug/L	11/20/06		R/J	SW8260
trans-1,3-Dichloropropene	ND	5	ug/L	11/20/06		R/J	SW8260
trans-1,4-dichloro-2-butene	ND	10	ug/L	11/20/06		R/J	SW8260
Trichloroethene	ND	5	ug/L	11/20/06		R/J	SW8260
Trichlorofluoromethane	ND	5	ug/L	11/20/06		R/J	SW8260
Trichlorotrifluoroethane	ND	5	ug/L	11/20/06		R/J	SW8260
Vinyl chloride	ND	5	ug/L	11/20/06		R/J	SW8260
QA/QC Surrogates							
% 1,2-dichlorobenzene-d4	95		%	11/20/06		R/J	SW8260
% Bromofluorobenzene	94		%	11/20/06		R/J	SW8260
% Dibromofluoromethane	94		%	11/20/06		R/J	SW8260
% Toluene-d8	101		%	11/20/06		R/J	SW8260

Comments:

If there are any questions regarding this data, please call Phoenix Client Services at extension 200.
ND=Not detected BDL=Below Detection Limit RL=Reporting Limit

Phyllis Shiller, Laboratory Director
November 30, 2006

PHOENIX

Environmental Laboratories, Inc.
587 East Middle Turnpike, P.O.Box 370, Manchester, CT 06040
Tel. (860) 645-1102 Fax (860) 645-0823

Analysis Report
November 30, 2006

FOR: Attn: Ms. Aimee Gates
CT Male Associates, PC
50 Century Hill Drive
Latham, NY 12110

Sample Information		Custody Information		Date	Time
Matrix:	WATER	Collected by:		11/17/06	13:25
Location Code:	CT-MALE	Received by:	LP	11/20/06	9:00
Rush Request:		Analyzed by:	see "By" below		
P.O.#:	06-6448				

SDG I.D.: GAH70835
Phoenix I.D.: AH70839

Laboratory Data

Client ID: OLD CHAMPLAIN MILL MW-4

Parameter	Result	RL	Units	Date	Time	By	Reference
Silver	< 0.001	0.001	mg/L	11/30/06		EKT	6010/200.7
Arsenic	< 0.004	0.004	mg/L	11/30/06		EKT	6010/200.7
Barium	0.226	0.002	mg/L	11/30/06		EKT	6010/200.7
Cadmium	< 0.001	0.001	mg/L	11/30/06		EKT	6010/200.7
Chromium	0.005	0.001	mg/L	11/30/06		EKT	6010/200.7
Mercury	< 0.0002	0.0002	mg/L	11/21/06		RS	7470/E245.1
Lead (Furnace)	0.008	0.001	mg/L	11/21/06		RS	7421/S3113B
Selenium	< 0.01	0.01	mg/L	11/30/06		EKT	6010/200.7
Mercury Digestion	Completed			11/21/06		D	E245.1
PCB Extraction	Completed			11/20/06		O	SW3510/3520
Total Metals Digestion	Completed			11/20/06		AG	
Polychlorinated Biphenyls							
PCB-1016	ND	0.5	ug/L	11/21/06		MH	608/ 8082
PCB-1221	ND	0.5	ug/L	11/21/06		MH	608/ 8082
PCB-1232	ND	0.5	ug/L	11/21/06		MH	608/ 8082
PCB-1242	ND	0.5	ug/L	11/21/06		MH	608/ 8082
PCB-1248	ND	0.5	ug/L	11/21/06		MH	608/ 8082
PCB-1254	ND	0.5	ug/L	11/21/06		MH	608/ 8082
PCB-1260	ND	0.5	ug/L	11/21/06		MH	608/ 8082
PCB-1262	ND	0.5	ug/L	11/21/06		MH	608/ 8082
PCB-1268	ND	0.5	ug/L	11/21/06		MH	608/ 8082
QA/QC Surrogates							
% DCBP (Surrogate Rec)	102		%	11/21/06		MH	608/ 8082
% TCMX (Surrogate Rec)	79		%	11/21/06		MH	608/ 8082

Client ID: OLD CHAMPLAIN MILL MW-4 Phoenix I.D.: AH70839

Parameter	Result	RL	Units	Date	Time	By	Reference
Volatiles							
1,1,1,2-Tetrachloroethane	ND	5	ug/L	11/20/06		R/J	SW8260
1,1,1-Trichloroethane	ND	5	ug/L	11/20/06		R/J	SW8260
1,1,2,2-Tetrachloroethane	ND	5	ug/L	11/20/06		R/J	SW8260
1,1,2-Trichloroethane	ND	5	ug/L	11/20/06		R/J	SW8260
1,1-Dichloroethane	ND	5	ug/L	11/20/06		R/J	SW8260
1,1-Dichloroethene	ND	5	ug/L	11/20/06		R/J	SW8260
1,1-Dichloropropene	ND	5	ug/L	11/20/06		R/J	SW8260
1,2,3-Trichlorobenzene	ND	5	ug/L	11/20/06		R/J	SW8260
1,2,3-Trichloropropane	ND	5	ug/L	11/20/06		R/J	SW8260
1,2,4-Trichlorobenzene	ND	5	ug/L	11/20/06		R/J	SW8260
1,2,4-Trimethylbenzene	ND	5	ug/L	11/20/06		R/J	SW8260
1,2-Dibromo-3-chloropropane	ND	5	ug/L	11/20/06		R/J	SW8260
1,2-Dichlorobenzene	ND	5	ug/L	11/20/06		R/J	SW8260
1,2-Dichloroethane	ND	5	ug/L	11/20/06		R/J	SW8260
1,2-Dichloropropane	ND	5	ug/L	11/20/06		R/J	SW8260
1,3,5-Trimethylbenzene	ND	5	ug/L	11/20/06		R/J	SW8260
1,3-Dichlorobenzene	ND	5	ug/L	11/20/06		R/J	SW8260
1,3-Dichloropropane	ND	5	ug/L	11/20/06		R/J	SW8260
1,4-Dichlorobenzene	ND	5	ug/L	11/20/06		R/J	SW8260
2,2-Dichloropropane	ND	5	ug/L	11/20/06		R/J	SW8260
2-Chlorotoluene	ND	5	ug/L	11/20/06		R/J	SW8260
2-Hexanone	ND	25	ug/L	11/20/06		R/J	SW8260
2-Isopropyltoluene	ND	5	ug/L	11/20/06		R/J	SW8260
4-Chlorotoluene	ND	5	ug/L	11/20/06		R/J	SW8260
4-Methyl-2-pentanone	ND	25	ug/L	11/20/06		R/J	SW8260
Acetone	ND	50	ug/L	11/20/06		R/J	SW8260
Acrylonitrile	ND	10	ug/L	11/20/06		R/J	SW8260
Benzene	ND	5	ug/L	11/20/06		R/J	SW8260
Bromobenzene	ND	5	ug/L	11/20/06		R/J	SW8260
Bromochloromethane	ND	5	ug/L	11/20/06		R/J	SW8260
Bromodichloromethane	ND	5	ug/L	11/20/06		R/J	SW8260
Bromoform	ND	5	ug/L	11/20/06		R/J	SW8260
Bromomethane	ND	5	ug/L	11/20/06		R/J	SW8260
Carbon Disulfide	ND	5	ug/L	11/20/06		R/J	SW8260
Carbon tetrachloride	ND	5	ug/L	11/20/06		R/J	SW8260
Chlorobenzene	ND	5	ug/L	11/20/06		R/J	SW8260
Chloroethane	ND	5	ug/L	11/20/06		R/J	SW8260
Chloroform	ND	5	ug/L	11/20/06		R/J	SW8260
Chloromethane	ND	5	ug/L	11/20/06		R/J	SW8260
cis-1,2-Dichloroethene	ND	5	ug/L	11/20/06		R/J	SW8260
cis-1,3-Dichloropropene	ND	5	ug/L	11/20/06		R/J	SW8260
Dibromochloromethane	ND	5	ug/L	11/20/06		R/J	SW8260

Client ID: OLD CHAMPLAIN MILL MW-4 Phoenix I.D.: AH70839

Parameter	Result	RL	Units	Date	Time	By	Reference
Dibromoethane	ND	5	ug/L	11/20/06		R/J	SW8260
Dibromomethane	ND	5	ug/L	11/20/06		R/J	SW8260
Dichlorodifluoromethane	ND	5	ug/L	11/20/06		R/J	SW8260
Ethylbenzene	ND	5	ug/L	11/20/06		R/J	SW8260
Hexachlorobutadiene	ND	5	ug/L	11/20/06		R/J	SW8260
Isopropylbenzene	ND	5	ug/L	11/20/06		R/J	SW8260
m&p-Xylene	ND	5	ug/L	11/20/06		R/J	SW8260
Methyl Ethyl Ketone	ND	60	ug/L	11/20/06		R/J	SW8260
Methyl t-butyl ether (MTBE)	ND	10	ug/L	11/20/06		R/J	SW8260
Methylene chloride	ND	5	ug/L	11/20/06		R/J	SW8260
n-Butylbenzene	ND	5	ug/L	11/20/06		R/J	SW8260
n-Propylbenzene	ND	5	ug/L	11/20/06		R/J	SW8260
Naphthalene	ND	5	ug/L	11/20/06		R/J	SW8260
o-Xylene	ND	5	ug/L	11/20/06		R/J	SW8260
p-Isopropyltoluene	ND	5	ug/L	11/20/06		R/J	SW8260
sec-Butylbenzene	ND	5	ug/L	11/20/06		R/J	SW8260
Styrene	ND	5	ug/L	11/20/06		R/J	SW8260
tert-Butylbenzene	ND	5	ug/L	11/20/06		R/J	SW8260
Tetrachloroethene	ND	5	ug/L	11/20/06		R/J	SW8260
Tetrahydrofuran (THF)	ND	10	ug/L	11/20/06		R/J	SW8260
Toluene	ND	5	ug/L	11/20/06		R/J	SW8260
Total Xylenes	ND	5	ug/L	11/20/06		R/J	SW8260
trans-1,2-Dichloroethene	ND	5	ug/L	11/20/06		R/J	SW8260
trans-1,3-Dichloropropene	ND	5	ug/L	11/20/06		R/J	SW8260
trans-1,4-dichloro-2-butene	ND	10	ug/L	11/20/06		R/J	SW8260
Trichloroethene	ND	5	ug/L	11/20/06		R/J	SW8260
Trichlorofluoromethane	ND	5	ug/L	11/20/06		R/J	SW8260
Trichlorotrifluoroethane	ND	5	ug/L	11/20/06		R/J	SW8260
Vinyl chloride	ND	5	ug/L	11/20/06		R/J	SW8260
QA/QC Surrogates							
% 1,2-dichlorobenzene-d4	95		%	11/20/06		R/J	SW8260
% Bromofluorobenzene	93		%	11/20/06		R/J	SW8260
% Dibromofluoromethane	96		%	11/20/06		R/J	SW8260
% Toluene-d8	99		%	11/20/06		R/J	SW8260

Comments:

If there are any questions regarding this data, please call Phoenix Client Services at extension 200.
ND=Not detected BDL=Below Detection Limit RL=Reporting Limit

Phyllis Shiller, Laboratory Director
November 30, 2006

PHOENIX

Environmental Laboratories, Inc.
587 East Middle Turnpike, P.O.Box 370, Manchester, CT 06040
Tel. (860) 645-1102 Fax (860) 645-0823

ACCREDITED IN ACCORDANCE WITH nelac

Analysis Report
November 30, 2006

FOR: Attn: Ms. Aimee Gates
CT Male Associates, PC
50 Century Hill Drive
Latham, NY 12110

Sample Information		Custody Information		Date	Time
Matrix:	WATER	Collected by:		11/17/06	12:15
Location Code:	CT-MALE	Received by:	LP	11/20/06	9:00
Rush Request:		Analyzed by:	see "By" below		
P.O.#:	06-6448				

SDG I.D.: GAH70835
Phoenix I.D.: AH70840

Laboratory Data

Client ID: OLD CHAMPLAIN MILL MW-5

Parameter	Result	RL	Units	Date	Time	By	Reference
Silver	< 0.001	0.001	mg/L	11/30/06		EKT	6010/200.7
Arsenic	< 0.004	0.004	mg/L	11/30/06		EKT	6010/200.7
Barium	0.217	0.002	mg/L	11/30/06		EKT	6010/200.7
Cadmium	< 0.001	0.001	mg/L	11/30/06		EKT	6010/200.7
Chromium	0.024	0.001	mg/L	11/30/06		EKT	6010/200.7
Mercury	0.0004	0.0002	mg/L	11/21/06		RS	7470/E245.1
Lead (Furnace)	0.031	0.001	mg/L	11/21/06		RS	7421/S3113B
Selenium	< 0.01	0.01	mg/L	11/30/06		EKT	6010/200.7
Mercury Digestion	Completed			11/21/06		D	E245.1
PCB Extraction	Completed			11/20/06		O	SW3510/3520
Total Metals Digestion	Completed			11/20/06		AG	
Polychlorinated Biphenyls							
PCB-1016	ND	0.5	ug/L	11/21/06		MH	608/ 8082
PCB-1221	ND	0.5	ug/L	11/21/06		MH	608/ 8082
PCB-1232	ND	0.5	ug/L	11/21/06		MH	608/ 8082
PCB-1242	ND	0.5	ug/L	11/21/06		MH	608/ 8082
PCB-1248	ND	0.5	ug/L	11/21/06		MH	608/ 8082
PCB-1254	ND	0.5	ug/L	11/21/06		MH	608/ 8082
PCB-1260	ND	0.5	ug/L	11/21/06		MH	608/ 8082
PCB-1262	ND	0.5	ug/L	11/21/06		MH	608/ 8082
PCB-1268	ND	0.5	ug/L	11/21/06		MH	608/ 8082
QA/QC Surrogates							
% DCBP (Surrogate Rec)	58		%	11/21/06		MH	608/ 8082
% TCMX (Surrogate Rec)	88		%	11/21/06		MH	608/ 8082

Client ID: OLD CHAMPLAIN MILL MW-5 Phoenix I.D.: AH70840

Parameter	Result	RL	Units	Date	Time	By	Reference
Volatiles							
1,1,1,2-Tetrachloroethane	ND	5	ug/L	11/20/06		R/J	SW8260
1,1,1-Trichloroethane	ND	5	ug/L	11/20/06		R/J	SW8260
1,1,2,2-Tetrachloroethane	ND	5	ug/L	11/20/06		R/J	SW8260
1,1,2-Trichloroethane	ND	5	ug/L	11/20/06		R/J	SW8260
1,1-Dichloroethane	ND	5	ug/L	11/20/06		R/J	SW8260
1,1-Dichloroethene	ND	5	ug/L	11/20/06		R/J	SW8260
1,1-Dichloropropene	ND	5	ug/L	11/20/06		R/J	SW8260
1,2,3-Trichlorobenzene	ND	5	ug/L	11/20/06		R/J	SW8260
1,2,3-Trichloropropane	ND	5	ug/L	11/20/06		R/J	SW8260
1,2,4-Trichlorobenzene	ND	5	ug/L	11/20/06		R/J	SW8260
1,2,4-Trimethylbenzene	ND	5	ug/L	11/20/06		R/J	SW8260
1,2-Dibromo-3-chloropropane	ND	5	ug/L	11/20/06		R/J	SW8260
1,2-Dichlorobenzene	ND	5	ug/L	11/20/06		R/J	SW8260
1,2-Dichloroethane	ND	5	ug/L	11/20/06		R/J	SW8260
1,2-Dichloropropane	ND	5	ug/L	11/20/06		R/J	SW8260
1,3,5-Trimethylbenzene	ND	5	ug/L	11/20/06		R/J	SW8260
1,3-Dichlorobenzene	ND	5	ug/L	11/20/06		R/J	SW8260
1,3-Dichloropropane	ND	5	ug/L	11/20/06		R/J	SW8260
1,4-Dichlorobenzene	ND	5	ug/L	11/20/06		R/J	SW8260
2,2-Dichloropropane	ND	5	ug/L	11/20/06		R/J	SW8260
2-Chlorotoluene	ND	5	ug/L	11/20/06		R/J	SW8260
2-Hexanone	ND	25	ug/L	11/20/06		R/J	SW8260
2-Isopropyltoluene	ND	5	ug/L	11/20/06		R/J	SW8260
4-Chlorotoluene	ND	5	ug/L	11/20/06		R/J	SW8260
4-Methyl-2-pentanone	ND	25	ug/L	11/20/06		R/J	SW8260
Acetone	ND	50	ug/L	11/20/06		R/J	SW8260
Acrylonitrile	ND	10	ug/L	11/20/06		R/J	SW8260
Benzene	ND	5	ug/L	11/20/06		R/J	SW8260
Bromobenzene	ND	5	ug/L	11/20/06		R/J	SW8260
Bromochloromethane	ND	5	ug/L	11/20/06		R/J	SW8260
Bromodichloromethane	ND	5	ug/L	11/20/06		R/J	SW8260
Bromoform	ND	5	ug/L	11/20/06		R/J	SW8260
Bromomethane	ND	5	ug/L	11/20/06		R/J	SW8260
Carbon Disulfide	ND	5	ug/L	11/20/06		R/J	SW8260
Carbon tetrachloride	ND	5	ug/L	11/20/06		R/J	SW8260
Chlorobenzene	ND	5	ug/L	11/20/06		R/J	SW8260
Chloroethane	ND	5	ug/L	11/20/06		R/J	SW8260
Chloroform	ND	5	ug/L	11/20/06		R/J	SW8260
Chloromethane	ND	5	ug/L	11/20/06		R/J	SW8260
cis-1,2-Dichloroethene	ND	5	ug/L	11/20/06		R/J	SW8260
cis-1,3-Dichloropropene	ND	5	ug/L	11/20/06		R/J	SW8260
Dibromochloromethane	ND	5	ug/L	11/20/06		R/J	SW8260

Client ID: OLD CHAMPLAIN MILL MW-5 Phoenix I.D.: AH70840

Parameter	Result	RL	Units	Date	Time	By	Reference
Dibromoethane	ND	5	ug/L	11/20/06		R/J	SW8260
Dibromomethane	ND	5	ug/L	11/20/06		R/J	SW8260
Dichlorodifluoromethane	ND	5	ug/L	11/20/06		R/J	SW8260
Ethylbenzene	ND	5	ug/L	11/20/06		R/J	SW8260
Hexachlorobutadiene	ND	5	ug/L	11/20/06		R/J	SW8260
Isopropylbenzene	ND	5	ug/L	11/20/06		R/J	SW8260
m&p-Xylene	ND	5	ug/L	11/20/06		R/J	SW8260
Methyl Ethyl Ketone	ND	60	ug/L	11/20/06		R/J	SW8260
Methyl t-butyl ether (MTBE)	ND	10	ug/L	11/20/06		R/J	SW8260
Methylene chloride	ND	5	ug/L	11/20/06		R/J	SW8260
n-Butylbenzene	ND	5	ug/L	11/20/06		R/J	SW8260
n-Propylbenzene	ND	5	ug/L	11/20/06		R/J	SW8260
Naphthalene	ND	5	ug/L	11/20/06		R/J	SW8260
o-Xylene	ND	5	ug/L	11/20/06		R/J	SW8260
p-Isopropyltoluene	ND	5	ug/L	11/20/06		R/J	SW8260
sec-Butylbenzene	ND	5	ug/L	11/20/06		R/J	SW8260
Styrene	ND	5	ug/L	11/20/06		R/J	SW8260
tert-Butylbenzene	ND	5	ug/L	11/20/06		R/J	SW8260
Tetrachloroethene	ND	5	ug/L	11/20/06		R/J	SW8260
Tetrahydrofuran (THF)	ND	10	ug/L	11/20/06		R/J	SW8260
Toluene	ND	5	ug/L	11/20/06		R/J	SW8260
Total Xylenes	ND	5	ug/L	11/20/06		R/J	SW8260
trans-1,2-Dichloroethene	ND	5	ug/L	11/20/06		R/J	SW8260
trans-1,3-Dichloropropene	ND	5	ug/L	11/20/06		R/J	SW8260
trans-1,4-dichloro-2-butene	ND	10	ug/L	11/20/06		R/J	SW8260
Trichloroethene	ND	5	ug/L	11/20/06		R/J	SW8260
Trichlorofluoromethane	ND	5	ug/L	11/20/06		R/J	SW8260
Trichlorotrifluoroethane	ND	5	ug/L	11/20/06		R/J	SW8260
Vinyl chloride	ND	5	ug/L	11/20/06		R/J	SW8260
QA/QC Surrogates							
% 1,2-dichlorobenzene-d4	97		%	11/20/06		R/J	SW8260
% Bromofluorobenzene	97		%	11/20/06		R/J	SW8260
% Dibromofluoromethane	96		%	11/20/06		R/J	SW8260
% Toluene-d8	98		%	11/20/06		R/J	SW8260

Comments:

If there are any questions regarding this data, please call Phoenix Client Services at extension 200.
ND=Not detected BDL=Below Detection Limit RL=Reporting Limit

Phyllis Shiller, Laboratory Director
November 30, 2006

PHOENIX

Environmental Laboratories, Inc.
587 East Middle Turnpike, P.O.Box 370, Manchester, CT 06040
Tel. (860) 645-1102 Fax (860) 645-0823

ACCREDITED IN ACCORDANCE WITH nelac

Analysis Report

November 30, 2006

FOR: Attn: Ms. Aimee Gates
CT Male Associates, PC
50 Century Hill Drive
Latham, NY 12110

Sample Information		Custody Information		Date	Time
Matrix:	WATER	Collected by:		11/17/06	12:00
Location Code:	CT-MALE	Received by:	LP	11/20/06	9:00
Rush Request:		Analyzed by:	see "By" below		
P.O.#:	06-6448				

SDG I.D.: GAH70835
Phoenix I.D.: AH70841

Laboratory Data

Client ID: OLD CHAMPLAIN MILL MW-6

Parameter	Result	RL	Units	Date	Time	By	Reference
Silver	< 0.001	0.001	mg/L	11/30/06		EKT	6010/200.7
Arsenic	< 0.004	0.004	mg/L	11/30/06		EKT	6010/200.7
Barium	0.231	0.002	mg/L	11/30/06		EKT	6010/200.7
Cadmium	< 0.001	0.001	mg/L	11/30/06		EKT	6010/200.7
Chromium	0.022	0.001	mg/L	11/30/06		EKT	6010/200.7
Mercury	< 0.0002	0.0002	mg/L	11/21/06		RS	7470/E245.1
Lead (Furnace)	0.009	0.001	mg/L	11/21/06		RS	7421/S3113B
Selenium	< 0.01	0.01	mg/L	11/30/06		EKT	6010/200.7
Mercury Digestion	Completed			11/21/06		D	E245.1
PCB Extraction	Completed			11/20/06		O	SW3510/3520
Total Metals Digestion	Completed			11/20/06		AG	
Polychlorinated Biphenyls							
PCB-1016	ND	0.5	ug/L	11/21/06		MH	608/ 8082
PCB-1221	ND	0.5	ug/L	11/21/06		MH	608/ 8082
PCB-1232	ND	0.5	ug/L	11/21/06		MH	608/ 8082
PCB-1242	ND	0.5	ug/L	11/21/06		MH	608/ 8082
PCB-1248	ND	0.5	ug/L	11/21/06		MH	608/ 8082
PCB-1254	ND	0.5	ug/L	11/21/06		MH	608/ 8082
PCB-1260	ND	0.5	ug/L	11/21/06		MH	608/ 8082
PCB-1262	ND	0.5	ug/L	11/21/06		MH	608/ 8082
PCB-1268	ND	0.5	ug/L	11/21/06		MH	608/ 8082
QA/QC Surrogates							
% DCBP (Surrogate Rec)	60		%	11/21/06		MH	608/ 8082
% TCMX (Surrogate Rec)	92		%	11/21/06		MH	608/ 8082

Client ID: OLD CHAMPLAIN MILL MW-6 Phoenix I.D.: AH70841

Parameter	Result	RL	Units	Date	Time	By	Reference
Volatiles							
1,1,1,2-Tetrachloroethane	ND	5	ug/L	11/20/06		R/J	SW8260
1,1,1-Trichloroethane	ND	5	ug/L	11/20/06		R/J	SW8260
1,1,2,2-Tetrachloroethane	ND	5	ug/L	11/20/06		R/J	SW8260
1,1,2-Trichloroethane	ND	5	ug/L	11/20/06		R/J	SW8260
1,1-Dichloroethane	ND	5	ug/L	11/20/06		R/J	SW8260
1,1-Dichloroethene	ND	5	ug/L	11/20/06		R/J	SW8260
1,1-Dichloropropene	ND	5	ug/L	11/20/06		R/J	SW8260
1,2,3-Trichlorobenzene	ND	5	ug/L	11/20/06		R/J	SW8260
1,2,3-Trichloropropane	ND	5	ug/L	11/20/06		R/J	SW8260
1,2,4-Trichlorobenzene	ND	5	ug/L	11/20/06		R/J	SW8260
1,2,4-Trimethylbenzene	ND	5	ug/L	11/20/06		R/J	SW8260
1,2-Dibromo-3-chloropropane	ND	5	ug/L	11/20/06		R/J	SW8260
1,2-Dichlorobenzene	ND	5	ug/L	11/20/06		R/J	SW8260
1,2-Dichloroethane	ND	5	ug/L	11/20/06		R/J	SW8260
1,2-Dichloropropane	ND	5	ug/L	11/20/06		R/J	SW8260
1,3,5-Trimethylbenzene	ND	5	ug/L	11/20/06		R/J	SW8260
1,3-Dichlorobenzene	ND	5	ug/L	11/20/06		R/J	SW8260
1,3-Dichloropropane	ND	5	ug/L	11/20/06		R/J	SW8260
1,4-Dichlorobenzene	ND	5	ug/L	11/20/06		R/J	SW8260
2,2-Dichloropropane	ND	5	ug/L	11/20/06		R/J	SW8260
2-Chlorotoluene	ND	5	ug/L	11/20/06		R/J	SW8260
2-Hexanone	ND	25	ug/L	11/20/06		R/J	SW8260
2-Isopropyltoluene	ND	5	ug/L	11/20/06		R/J	SW8260
4-Chlorotoluene	ND	5	ug/L	11/20/06		R/J	SW8260
4-Methyl-2-pentanone	ND	25	ug/L	11/20/06		R/J	SW8260
Acetone	ND	50	ug/L	11/20/06		R/J	SW8260
Acrylonitrile	ND	10	ug/L	11/20/06		R/J	SW8260
Benzene	ND	5	ug/L	11/20/06		R/J	SW8260
Bromobenzene	ND	5	ug/L	11/20/06		R/J	SW8260
Bromochloromethane	ND	5	ug/L	11/20/06		R/J	SW8260
Bromodichloromethane	ND	5	ug/L	11/20/06		R/J	SW8260
Bromoform	ND	5	ug/L	11/20/06		R/J	SW8260
Bromomethane	ND	5	ug/L	11/20/06		R/J	SW8260
Carbon Disulfide	ND	5	ug/L	11/20/06		R/J	SW8260
Carbon tetrachloride	ND	5	ug/L	11/20/06		R/J	SW8260
Chlorobenzene	ND	5	ug/L	11/20/06		R/J	SW8260
Chloroethane	ND	5	ug/L	11/20/06		R/J	SW8260
Chloroform	ND	5	ug/L	11/20/06		R/J	SW8260
Chloromethane	ND	5	ug/L	11/20/06		R/J	SW8260
cis-1,2-Dichloroethene	ND	5	ug/L	11/20/06		R/J	SW8260
cis-1,3-Dichloropropene	ND	5	ug/L	11/20/06		R/J	SW8260
Dibromochloromethane	ND	5	ug/L	11/20/06		R/J	SW8260

Client ID: OLD CHAMPLAIN MILL MW-6 Phoenix I.D.: AH70841

Parameter	Result	RL	Units	Date	Time	By	Reference
Dibromoethane	ND	5	ug/L	11/20/06		R/J	SW8260
Dibromomethane	ND	5	ug/L	11/20/06		R/J	SW8260
Dichlorodifluoromethane	ND	5	ug/L	11/20/06		R/J	SW8260
Ethylbenzene	ND	5	ug/L	11/20/06		R/J	SW8260
Hexachlorobutadiene	ND	5	ug/L	11/20/06		R/J	SW8260
Isopropylbenzene	ND	5	ug/L	11/20/06		R/J	SW8260
m&p-Xylene	ND	5	ug/L	11/20/06		R/J	SW8260
Methyl Ethyl Ketone	ND	60	ug/L	11/20/06		R/J	SW8260
Methyl t-butyl ether (MTBE)	ND	10	ug/L	11/20/06		R/J	SW8260
Methylene chloride	ND	5	ug/L	11/20/06		R/J	SW8260
n-Butylbenzene	ND	5	ug/L	11/20/06		R/J	SW8260
n-Propylbenzene	ND	5	ug/L	11/20/06		R/J	SW8260
Naphthalene	ND	5	ug/L	11/20/06		R/J	SW8260
o-Xylene	ND	5	ug/L	11/20/06		R/J	SW8260
p-Isopropyltoluene	ND	5	ug/L	11/20/06		R/J	SW8260
sec-Butylbenzene	ND	5	ug/L	11/20/06		R/J	SW8260
Styrene	ND	5	ug/L	11/20/06		R/J	SW8260
tert-Butylbenzene	ND	5	ug/L	11/20/06		R/J	SW8260
Tetrachloroethene	ND	5	ug/L	11/20/06		R/J	SW8260
Tetrahydrofuran (THF)	ND	10	ug/L	11/20/06		R/J	SW8260
Toluene	ND	5	ug/L	11/20/06		R/J	SW8260
Total Xylenes	ND	5	ug/L	11/20/06		R/J	SW8260
trans-1,2-Dichloroethene	ND	5	ug/L	11/20/06		R/J	SW8260
trans-1,3-Dichloropropene	ND	5	ug/L	11/20/06		R/J	SW8260
trans-1,4-dichloro-2-butene	ND	10	ug/L	11/20/06		R/J	SW8260
Trichloroethene	ND	5	ug/L	11/20/06		R/J	SW8260
Trichlorofluoromethane	ND	5	ug/L	11/20/06		R/J	SW8260
Trichlorotrifluoroethane	ND	5	ug/L	11/20/06		R/J	SW8260
Vinyl chloride	ND	5	ug/L	11/20/06		R/J	SW8260
<u>QA/QC Surrogates</u>							
% 1,2-dichlorobenzene-d4	98		%	11/20/06		R/J	SW8260
% Bromofluorobenzene	96		%	11/20/06		R/J	SW8260
% Dibromofluoromethane	94		%	11/20/06		R/J	SW8260
% Toluene-d8	102		%	11/20/06		R/J	SW8260

Comments:

If there are any questions regarding this data, please call Phoenix Client Services at extension 200.
ND=Not detected BDL=Below Detection Limit RL=Reporting Limit

Phyllis Shiller, Laboratory Director
November 30, 2006

PHOENIX

Environmental Laboratories, Inc.
587 East Middle Turnpike, P.O.Box 370, Manchester, CT 06040
Tel. (860) 645-1102 Fax (860) 645-0823

Analysis Report
November 30, 2006

FOR: Attn: Ms. Aimee Gates
CT Male Associates, PC
50 Century Hill Drive
Latham, NY 12110

Sample Information		Custody Information		Date	Time
Matrix:	WATER	Collected by:		11/17/06	9:25
Location Code:	CT-MALE	Received by:	LP	11/20/06	9:00
Rush Request:		Analyzed by:	see "By" below		
P.O.#:	06-6448				

SDG I.D.: GAH70835
Phoenix I.D.: AH70842

Laboratory Data

Client ID: OLD CHAMPLAIN MILL MW-7

Parameter	Result	RL	Units	Date	Time	By	Reference
Silver	< 0.001	0.001	mg/L	11/30/06		EKT	6010/200.7
Arsenic	< 0.004	0.004	mg/L	11/30/06		EKT	6010/200.7
Barium	0.095	0.002	mg/L	11/30/06		EKT	6010/200.7
Cadmium	< 0.001	0.001	mg/L	11/30/06		EKT	6010/200.7
Chromium	0.005	0.001	mg/L	11/30/06		EKT	6010/200.7
Mercury	< 0.0002	0.0002	mg/L	11/21/06		RS	7470/E245.1
Lead (Furnace)	0.008	0.001	mg/L	11/21/06		RS	7421/S3113B
Selenium	< 0.01	0.01	mg/L	11/30/06		EKT	6010/200.7
Mercury Digestion	Completed			11/21/06		D	E245.1
PCB Extraction	Completed			11/20/06		O	SW3510/3520
Total Metals Digestion	Completed			11/20/06		AG	
Polychlorinated Biphenyls							
PCB-1016	ND	0.5	ug/L	11/21/06		MH	608/ 8082
PCB-1221	ND	0.5	ug/L	11/21/06		MH	608/ 8082
PCB-1232	ND	0.5	ug/L	11/21/06		MH	608/ 8082
PCB-1242	ND	0.5	ug/L	11/21/06		MH	608/ 8082
PCB-1248	ND	0.5	ug/L	11/21/06		MH	608/ 8082
PCB-1254	ND	0.5	ug/L	11/21/06		MH	608/ 8082
PCB-1260	ND	0.5	ug/L	11/21/06		MH	608/ 8082
PCB-1262	ND	0.5	ug/L	11/21/06		MH	608/ 8082
PCB-1268	ND	0.5	ug/L	11/21/06		MH	608/ 8082
QA/QC Surrogates							
% DCBP (Surrogate Rec)	71		%	11/21/06		MH	608/ 8082
% TCMX (Surrogate Rec)	90		%	11/21/06		MH	608/ 8082

Client ID: OLD CHAMPLAIN MILL MW-7 Phoenix I.D.: AH70842

Parameter	Result	RL	Units	Date	Time	By	Reference
Volatiles							
1,1,1,2-Tetrachloroethane	ND	5	ug/L	11/20/06		R/J	SW8260
1,1,1-Trichloroethane	ND	5	ug/L	11/20/06		R/J	SW8260
1,1,2,2-Tetrachloroethane	ND	5	ug/L	11/20/06		R/J	SW8260
1,1,2-Trichloroethane	ND	5	ug/L	11/20/06		R/J	SW8260
1,1-Dichloroethane	ND	5	ug/L	11/20/06		R/J	SW8260
1,1-Dichloroethene	ND	5	ug/L	11/20/06		R/J	SW8260
1,1-Dichloropropene	ND	5	ug/L	11/20/06		R/J	SW8260
1,2,3-Trichlorobenzene	ND	5	ug/L	11/20/06		R/J	SW8260
1,2,3-Trichloropropane	ND	5	ug/L	11/20/06		R/J	SW8260
1,2,4-Trichlorobenzene	ND	5	ug/L	11/20/06		R/J	SW8260
1,2,4-Trimethylbenzene	ND	5	ug/L	11/20/06		R/J	SW8260
1,2-Dibromo-3-chloropropane	ND	5	ug/L	11/20/06		R/J	SW8260
1,2-Dichlorobenzene	ND	5	ug/L	11/20/06		R/J	SW8260
1,2-Dichloroethane	ND	5	ug/L	11/20/06		R/J	SW8260
1,2-Dichloropropane	ND	5	ug/L	11/20/06		R/J	SW8260
1,3,5-Trimethylbenzene	ND	5	ug/L	11/20/06		R/J	SW8260
1,3-Dichlorobenzene	ND	5	ug/L	11/20/06		R/J	SW8260
1,3-Dichloropropane	ND	5	ug/L	11/20/06		R/J	SW8260
1,4-Dichlorobenzene	ND	5	ug/L	11/20/06		R/J	SW8260
2,2-Dichloropropane	ND	5	ug/L	11/20/06		R/J	SW8260
2-Chlorotoluene	ND	5	ug/L	11/20/06		R/J	SW8260
2-Hexanone	ND	25	ug/L	11/20/06		R/J	SW8260
2-Isopropyltoluene	ND	5	ug/L	11/20/06		R/J	SW8260
4-Chlorotoluene	ND	5	ug/L	11/20/06		R/J	SW8260
4-Methyl-2-pentanone	ND	25	ug/L	11/20/06		R/J	SW8260
Acetone	ND	50	ug/L	11/20/06		R/J	SW8260
Acrylonitrile	ND	10	ug/L	11/20/06		R/J	SW8260
Benzene	ND	5	ug/L	11/20/06		R/J	SW8260
Bromobenzene	ND	5	ug/L	11/20/06		R/J	SW8260
Bromochloromethane	ND	5	ug/L	11/20/06		R/J	SW8260
Bromodichloromethane	ND	5	ug/L	11/20/06		R/J	SW8260
Bromoform	ND	5	ug/L	11/20/06		R/J	SW8260
Bromomethane	ND	5	ug/L	11/20/06		R/J	SW8260
Carbon Disulfide	ND	5	ug/L	11/20/06		R/J	SW8260
Carbon tetrachloride	ND	5	ug/L	11/20/06		R/J	SW8260
Chlorobenzene	ND	5	ug/L	11/20/06		R/J	SW8260
Chloroethane	ND	5	ug/L	11/20/06		R/J	SW8260
Chloroform	ND	5	ug/L	11/20/06		R/J	SW8260
Chloromethane	ND	5	ug/L	11/20/06		R/J	SW8260
cis-1,2-Dichloroethene	ND	5	ug/L	11/20/06		R/J	SW8260
cis-1,3-Dichloropropene	ND	5	ug/L	11/20/06		R/J	SW8260
Dibromochloromethane	ND	5	ug/L	11/20/06		R/J	SW8260

Client ID: OLD CHAMPLAIN MILL MW-7 Phoenix I.D.: AH70842

Parameter	Result	RL	Units	Date	Time	By	Reference
Dibromoethane	ND	5	ug/L	11/20/06		R/J	SW8260
Dibromomethane	ND	5	ug/L	11/20/06		R/J	SW8260
Dichlorodifluoromethane	ND	5	ug/L	11/20/06		R/J	SW8260
Ethylbenzene	ND	5	ug/L	11/20/06		R/J	SW8260
Hexachlorobutadiene	ND	5	ug/L	11/20/06		R/J	SW8260
Isopropylbenzene	ND	5	ug/L	11/20/06		R/J	SW8260
m&p-Xylene	ND	5	ug/L	11/20/06		R/J	SW8260
Methyl Ethyl Ketone	ND	60	ug/L	11/20/06		R/J	SW8260
Methyl t-butyl ether (MTBE)	ND	10	ug/L	11/20/06		R/J	SW8260
Methylene chloride	ND	5	ug/L	11/20/06		R/J	SW8260
n-Butylbenzene	ND	5	ug/L	11/20/06		R/J	SW8260
n-Propylbenzene	ND	5	ug/L	11/20/06		R/J	SW8260
Naphthalene	ND	5	ug/L	11/20/06		R/J	SW8260
o-Xylene	ND	5	ug/L	11/20/06		R/J	SW8260
p-Isopropyltoluene	ND	5	ug/L	11/20/06		R/J	SW8260
sec-Butylbenzene	ND	5	ug/L	11/20/06		R/J	SW8260
Styrene	ND	5	ug/L	11/20/06		R/J	SW8260
tert-Butylbenzene	ND	5	ug/L	11/20/06		R/J	SW8260
Tetrachloroethene	ND	5	ug/L	11/20/06		R/J	SW8260
Tetrahydrofuran (THF)	ND	10	ug/L	11/20/06		R/J	SW8260
Toluene	ND	5	ug/L	11/20/06		R/J	SW8260
Total Xylenes	ND	5	ug/L	11/20/06		R/J	SW8260
trans-1,2-Dichloroethene	ND	5	ug/L	11/20/06		R/J	SW8260
trans-1,3-Dichloropropene	ND	5	ug/L	11/20/06		R/J	SW8260
trans-1,4-dichloro-2-butene	ND	10	ug/L	11/20/06		R/J	SW8260
Trichloroethene	ND	5	ug/L	11/20/06		R/J	SW8260
Trichlorofluoromethane	ND	5	ug/L	11/20/06		R/J	SW8260
Trichlorotrifluoroethane	ND	5	ug/L	11/20/06		R/J	SW8260
Vinyl chloride	ND	5	ug/L	11/20/06		R/J	SW8260
QA/QC Surrogates							
% 1,2-dichlorobenzene-d4	101		%	11/20/06		R/J	SW8260
% Bromofluorobenzene	95		%	11/20/06		R/J	SW8260
% Dibromofluoromethane	99		%	11/20/06		R/J	SW8260
% Toluene-d8	98		%	11/20/06		R/J	SW8260

Comments:

If there are any questions regarding this data, please call Phoenix Client Services at extension 200.
ND=Not detected BDL=Below Detection Limit RL=Reporting Limit

Phyllis Shiller, Laboratory Director
November 30, 2006

PHOENIX

Environmental Laboratories, Inc.
587 East Middle Turnpike, P.O.Box 370, Manchester, CT 06040
Tel. (860) 645-1102 Fax (860) 645-0823

ACCREDITED IN ACCORDANCE WITH nelac

Analysis Report
November 30, 2006

FOR: Attn: Ms. Aimee Gates
CT Male Associates, PC
50 Century Hill Drive
Latham, NY 12110

Sample Information		Custody Information		Date	Time
Matrix:	WATER	Collected by:		11/17/06	14:45
Location Code:	CT-MALE	Received by:	LP	11/20/06	9:00
Rush Request:		Analyzed by:	see "By" below		
P.O.#:	06-6448				

SDG I.D.: GAH70835
Phoenix I.D.: AH70843

Laboratory Data

Client ID: OLD CHAMPLAIN MILL MW-8

Parameter	Result		RL	Units	Date	Time	By	Reference
Silver	< 0.001		0.001	mg/L	11/30/06		EKT	6010/200.7
Arsenic	< 0.004		0.004	mg/L	11/30/06		EKT	6010/200.7
Barium	0.136		0.002	mg/L	11/30/06		EKT	6010/200.7
Cadmium	< 0.001		0.001	mg/L	11/30/06		EKT	6010/200.7
Chromium	0.011		0.001	mg/L	11/30/06		EKT	6010/200.7
Mercury	< 0.0002		0.0002	mg/L	11/21/06		RS	7470/E245.1
Lead (Furnace)	0.02		0.001	mg/L	11/21/06		RS	7421/S3113B
Selenium	< 0.01		0.01	mg/L	11/30/06		EKT	6010/200.7
Mercury Digestion	Completed				11/21/06		D	E245.1
PCB Extraction	Completed				11/20/06		O	SW3510/3520
Total Metals Digestion	Completed				11/20/06		AG	
Polychlorinated Biphenyls								
PCB-1016	ND		0.5	ug/L	11/21/06		MH	608/ 8082
PCB-1221	ND		0.5	ug/L	11/21/06		MH	608/ 8082
PCB-1232	ND		0.5	ug/L	11/21/06		MH	608/ 8082
PCB-1242	ND		0.5	ug/L	11/21/06		MH	608/ 8082
PCB-1248	ND		0.5	ug/L	11/21/06		MH	608/ 8082
PCB-1254	ND		0.5	ug/L	11/21/06		MH	608/ 8082
PCB-1260	ND		0.5	ug/L	11/21/06		MH	608/ 8082
PCB-1262	ND		0.5	ug/L	11/21/06		MH	608/ 8082
PCB-1268	ND		0.5	ug/L	11/21/06		MH	608/ 8082
QA/QC Surrogates								
% DCBP (Surrogate Rec)	27	*		%	11/21/06		MH	608/ 8082
% TCMX (Surrogate Rec)	47			%	11/21/06		MH	608/ 8082

Client ID: OLD CHAMPLAIN MILL MW-8 Phoenix I.D.: AH70843

Parameter	Result	RL	Units	Date	Time	By	Reference
Volatiles							
1,1,1,2-Tetrachloroethane	ND	5	ug/L	11/20/06		R/J	SW8260
1,1,1-Trichloroethane	ND	5	ug/L	11/20/06		R/J	SW8260
1,1,2,2-Tetrachloroethane	ND	5	ug/L	11/20/06		R/J	SW8260
1,1,2-Trichloroethane	ND	5	ug/L	11/20/06		R/J	SW8260
1,1-Dichloroethane	ND	5	ug/L	11/20/06		R/J	SW8260
1,1-Dichloroethene	ND	5	ug/L	11/20/06		R/J	SW8260
1,1-Dichloropropene	ND	5	ug/L	11/20/06		R/J	SW8260
1,2,3-Trichlorobenzene	ND	5	ug/L	11/20/06		R/J	SW8260
1,2,3-Trichloropropane	ND	5	ug/L	11/20/06		R/J	SW8260
1,2,4-Trichlorobenzene	ND	5	ug/L	11/20/06		R/J	SW8260
1,2,4-Trimethylbenzene	ND	5	ug/L	11/20/06		R/J	SW8260
1,2-Dibromo-3-chloropropane	ND	5	ug/L	11/20/06		R/J	SW8260
1,2-Dichlorobenzene	ND	5	ug/L	11/20/06		R/J	SW8260
1,2-Dichloroethane	ND	5	ug/L	11/20/06		R/J	SW8260
1,2-Dichloropropane	ND	5	ug/L	11/20/06		R/J	SW8260
1,3,5-Trimethylbenzene	ND	5	ug/L	11/20/06		R/J	SW8260
1,3-Dichlorobenzene	ND	5	ug/L	11/20/06		R/J	SW8260
1,3-Dichloropropane	ND	5	ug/L	11/20/06		R/J	SW8260
1,4-Dichlorobenzene	ND	5	ug/L	11/20/06		R/J	SW8260
2,2-Dichloropropane	ND	5	ug/L	11/20/06		R/J	SW8260
2-Chlorotoluene	ND	5	ug/L	11/20/06		R/J	SW8260
2-Hexanone	ND	25	ug/L	11/20/06		R/J	SW8260
2-Isopropyltoluene	ND	5	ug/L	11/20/06		R/J	SW8260
4-Chlorotoluene	ND	5	ug/L	11/20/06		R/J	SW8260
4-Methyl-2-pentanone	ND	25	ug/L	11/20/06		R/J	SW8260
Acetone	ND	50	ug/L	11/20/06		R/J	SW8260
Acrylonitrile	ND	10	ug/L	11/20/06		R/J	SW8260
Benzene	ND	5	ug/L	11/20/06		R/J	SW8260
Bromobenzene	ND	5	ug/L	11/20/06		R/J	SW8260
Bromochloromethane	ND	5	ug/L	11/20/06		R/J	SW8260
Bromodichloromethane	ND	5	ug/L	11/20/06		R/J	SW8260
Bromoform	ND	5	ug/L	11/20/06		R/J	SW8260
Bromomethane	ND	5	ug/L	11/20/06		R/J	SW8260
Carbon Disulfide	ND	5	ug/L	11/20/06		R/J	SW8260
Carbon tetrachloride	ND	5	ug/L	11/20/06		R/J	SW8260
Chlorobenzene	ND	5	ug/L	11/20/06		R/J	SW8260
Chloroethane	ND	5	ug/L	11/20/06		R/J	SW8260
Chloroform	ND	5	ug/L	11/20/06		R/J	SW8260
Chloromethane	ND	5	ug/L	11/20/06		R/J	SW8260
cis-1,2-Dichloroethene	ND	5	ug/L	11/20/06		R/J	SW8260
cis-1,3-Dichloropropene	ND	5	ug/L	11/20/06		R/J	SW8260
Dibromochloromethane	ND	5	ug/L	11/20/06		R/J	SW8260

Client ID: OLD CHAMPLAIN MILL MW-8 Phoenix I.D.: AH70843

Parameter	Result	RL	Units	Date	Time	By	Reference
Dibromoethane	ND	5	ug/L	11/20/06		R/J	SW8260
Dibromomethane	ND	5	ug/L	11/20/06		R/J	SW8260
Dichlorodifluoromethane	ND	5	ug/L	11/20/06		R/J	SW8260
Ethylbenzene	ND	5	ug/L	11/20/06		R/J	SW8260
Hexachlorobutadiene	ND	5	ug/L	11/20/06		R/J	SW8260
Isopropylbenzene	ND	5	ug/L	11/20/06		R/J	SW8260
m&p-Xylene	ND	5	ug/L	11/20/06		R/J	SW8260
Methyl Ethyl Ketone	ND	60	ug/L	11/20/06		R/J	SW8260
Methyl t-butyl ether (MTBE)	ND	10	ug/L	11/20/06		R/J	SW8260
Methylene chloride	ND	5	ug/L	11/20/06		R/J	SW8260
n-Butylbenzene	ND	5	ug/L	11/20/06		R/J	SW8260
n-Propylbenzene	ND	5	ug/L	11/20/06		R/J	SW8260
Naphthalene	ND	5	ug/L	11/20/06		R/J	SW8260
o-Xylene	ND	5	ug/L	11/20/06		R/J	SW8260
p-Isopropyltoluene	ND	5	ug/L	11/20/06		R/J	SW8260
sec-Butylbenzene	ND	5	ug/L	11/20/06		R/J	SW8260
Styrene	ND	5	ug/L	11/20/06		R/J	SW8260
tert-Butylbenzene	ND	5	ug/L	11/20/06		R/J	SW8260
Tetrachloroethene	ND	5	ug/L	11/20/06		R/J	SW8260
Tetrahydrofuran (THF)	ND	10	ug/L	11/20/06		R/J	SW8260
Toluene	ND	5	ug/L	11/20/06		R/J	SW8260
Total Xylenes	ND	5	ug/L	11/20/06		R/J	SW8260
trans-1,2-Dichloroethene	ND	5	ug/L	11/20/06		R/J	SW8260
trans-1,3-Dichloropropene	ND	5	ug/L	11/20/06		R/J	SW8260
trans-1,4-dichloro-2-butene	ND	10	ug/L	11/20/06		R/J	SW8260
Trichloroethene	ND	5	ug/L	11/20/06		R/J	SW8260
Trichlorofluoromethane	ND	5	ug/L	11/20/06		R/J	SW8260
Trichlorotrifluoroethane	ND	5	ug/L	11/20/06		R/J	SW8260
Vinyl chloride	ND	5	ug/L	11/20/06		R/J	SW8260
QA/QC Surrogates							
% 1,2-dichlorobenzene-d4	99		%	11/20/06		R/J	SW8260
% Bromofluorobenzene	95		%	11/20/06		R/J	SW8260
% Dibromofluoromethane	95		%	11/20/06		R/J	SW8260
% Toluene-d8	102		%	11/20/06		R/J	SW8260

Comments:

* Poor surrogate recovery was observed. Insufficient sample for re-extraction.

If there are any questions regarding this data, please call Phoenix Client Services at extension 200.

ND=Not detected BDL=Below Detection Limit RL=Reporting Limit

Phyllis Shiller

Phyllis Shiller, Laboratory Director
November 30, 2006

PHOENIX

Environmental Laboratories, Inc.
587 East Middle Turnpike, P.O.Box 370, Manchester, CT 06040
Tel. (860) 645-1102 Fax (860) 645-0823

ACCREDITED IN ACCORDANCE WITH nelac

Analysis Report

November 30, 2006

FOR: Attn: Ms. Aimee Gates
CT Male Associates, PC
50 Century Hill Drive
Latham, NY 12110

Sample Information		Custody Information		Date	Time
Matrix:	WATER	Collected by:		11/17/06	12:50
Location Code:	CT-MALE	Received by:	LP	11/20/06	9:00
Rush Request:		Analyzed by:	see "By" below		
P.O.#:	06-6448				

SDG I.D.: GAH70835
Phoenix I.D.: AH70844

Laboratory Data

Client ID: OLD CHAMPLAIN MILL MW-10

Parameter	Result	RL	Units	Date	Time	By	Reference
Silver	< 0.001	0.001	mg/L	11/30/06		EKT	6010/200.7
Arsenic	< 0.004	0.004	mg/L	11/30/06		EKT	6010/200.7
Barium	0.091	0.002	mg/L	11/30/06		EKT	6010/200.7
Cadmium	< 0.001	0.001	mg/L	11/30/06		EKT	6010/200.7
Chromium	0.01	0.001	mg/L	11/30/06		EKT	6010/200.7
Mercury	< 0.0002	0.0002	mg/L	11/21/06		RS	7470/E245.1
Lead (Furnace)	0.003	0.001	mg/L	11/21/06		RS	7421/S3113B
Selenium	< 0.01	0.01	mg/L	11/30/06		EKT	6010/200.7
Mercury Digestion	Completed			11/21/06		D	E245.1
PCB Extraction	Completed			11/20/06		O	SW3510/3520
Total Metals Digestion	Completed			11/20/06		AG	
Polychlorinated Biphenyls							
PCB-1016	ND	0.5	ug/L	11/21/06		MH	608/ 8082
PCB-1221	ND	0.5	ug/L	11/21/06		MH	608/ 8082
PCB-1232	ND	0.5	ug/L	11/21/06		MH	608/ 8082
PCB-1242	ND	0.5	ug/L	11/21/06		MH	608/ 8082
PCB-1248	ND	0.5	ug/L	11/21/06		MH	608/ 8082
PCB-1254	ND	0.5	ug/L	11/21/06		MH	608/ 8082
PCB-1260	ND	0.5	ug/L	11/21/06		MH	608/ 8082
PCB-1262	ND	0.5	ug/L	11/21/06		MH	608/ 8082
PCB-1268	ND	0.5	ug/L	11/21/06		MH	608/ 8082
QA/QC Surrogates							
% DCBP (Surrogate Rec)	77		%	11/21/06		MH	608/ 8082
% TCMX (Surrogate Rec)	71		%	11/21/06		MH	608/ 8082

Client ID: OLD CHAMPLAIN MILL MW-10 Phoenix I.D.: AH70844

Parameter	Result	RL	Units	Date	Time	By	Reference
Volatiles							
1,1,1,2-Tetrachloroethane	ND	5	ug/L	11/20/06		R/J	SW8260
1,1,1-Trichloroethane	ND	5	ug/L	11/20/06		R/J	SW8260
1,1,2,2-Tetrachloroethane	ND	5	ug/L	11/20/06		R/J	SW8260
1,1,2-Trichloroethane	ND	5	ug/L	11/20/06		R/J	SW8260
1,1-Dichloroethane	ND	5	ug/L	11/20/06		R/J	SW8260
1,1-Dichloroethene	ND	5	ug/L	11/20/06		R/J	SW8260
1,1-Dichloropropene	ND	5	ug/L	11/20/06		R/J	SW8260
1,2,3-Trichlorobenzene	ND	5	ug/L	11/20/06		R/J	SW8260
1,2,3-Trichloropropane	ND	5	ug/L	11/20/06		R/J	SW8260
1,2,4-Trichlorobenzene	ND	5	ug/L	11/20/06		R/J	SW8260
1,2,4-Trimethylbenzene	ND	5	ug/L	11/20/06		R/J	SW8260
1,2-Dibromo-3-chloropropane	ND	5	ug/L	11/20/06		R/J	SW8260
1,2-Dichlorobenzene	ND	5	ug/L	11/20/06		R/J	SW8260
1,2-Dichloroethane	ND	5	ug/L	11/20/06		R/J	SW8260
1,2-Dichloropropane	ND	5	ug/L	11/20/06		R/J	SW8260
1,3,5-Trimethylbenzene	ND	5	ug/L	11/20/06		R/J	SW8260
1,3-Dichlorobenzene	ND	5	ug/L	11/20/06		R/J	SW8260
1,3-Dichloropropane	ND	5	ug/L	11/20/06		R/J	SW8260
1,4-Dichlorobenzene	ND	5	ug/L	11/20/06		R/J	SW8260
2,2-Dichloropropane	ND	5	ug/L	11/20/06		R/J	SW8260
2-Chlorotoluene	ND	5	ug/L	11/20/06		R/J	SW8260
2-Hexanone	ND	25	ug/L	11/20/06		R/J	SW8260
2-Isopropyltoluene	ND	5	ug/L	11/20/06		R/J	SW8260
4-Chlorotoluene	ND	5	ug/L	11/20/06		R/J	SW8260
4-Methyl-2-pentanone	ND	25	ug/L	11/20/06		R/J	SW8260
Acetone	ND	50	ug/L	11/20/06		R/J	SW8260
Acrylonitrile	ND	10	ug/L	11/20/06		R/J	SW8260
Benzene	ND	5	ug/L	11/20/06		R/J	SW8260
Bromobenzene	ND	5	ug/L	11/20/06		R/J	SW8260
Bromochloromethane	ND	5	ug/L	11/20/06		R/J	SW8260
Bromodichloromethane	ND	5	ug/L	11/20/06		R/J	SW8260
Bromoform	ND	5	ug/L	11/20/06		R/J	SW8260
Bromomethane	ND	5	ug/L	11/20/06		R/J	SW8260
Carbon Disulfide	ND	5	ug/L	11/20/06		R/J	SW8260
Carbon tetrachloride	ND	5	ug/L	11/20/06		R/J	SW8260
Chlorobenzene	ND	5	ug/L	11/20/06		R/J	SW8260
Chloroethane	ND	5	ug/L	11/20/06		R/J	SW8260
Chloroform	ND	5	ug/L	11/20/06		R/J	SW8260
Chloromethane	ND	5	ug/L	11/20/06		R/J	SW8260
cis-1,2-Dichloroethene	12	5	ug/L	11/20/06		R/J	SW8260
cis-1,3-Dichloropropene	ND	5	ug/L	11/20/06		R/J	SW8260
Dibromochloromethane	ND	5	ug/L	11/20/06		R/J	SW8260

Client ID: OLD CHAMPLAIN MILL MW-10 Phoenix I.D.: AH70844

Parameter	Result	RL	Units	Date	Time	By	Reference
Dibromoethane	ND	5	ug/L	11/20/06		R/J	SW8260
Dibromomethane	ND	5	ug/L	11/20/06		R/J	SW8260
Dichlorodifluoromethane	ND	5	ug/L	11/20/06		R/J	SW8260
Ethylbenzene	ND	5	ug/L	11/20/06		R/J	SW8260
Hexachlorobutadiene	ND	5	ug/L	11/20/06		R/J	SW8260
Isopropylbenzene	ND	5	ug/L	11/20/06		R/J	SW8260
m&p-Xylene	ND	5	ug/L	11/20/06		R/J	SW8260
Methyl Ethyl Ketone	ND	60	ug/L	11/20/06		R/J	SW8260
Methyl t-butyl ether (MTBE)	ND	10	ug/L	11/20/06		R/J	SW8260
Methylene chloride	ND	5	ug/L	11/20/06		R/J	SW8260
n-Butylbenzene	ND	5	ug/L	11/20/06		R/J	SW8260
n-Propylbenzene	ND	5	ug/L	11/20/06		R/J	SW8260
Naphthalene	ND	5	ug/L	11/20/06		R/J	SW8260
o-Xylene	ND	5	ug/L	11/20/06		R/J	SW8260
p-Isopropyltoluene	ND	5	ug/L	11/20/06		R/J	SW8260
sec-Butylbenzene	ND	5	ug/L	11/20/06		R/J	SW8260
Styrene	ND	5	ug/L	11/20/06		R/J	SW8260
tert-Butylbenzene	ND	5	ug/L	11/20/06		R/J	SW8260
Tetrachloroethene	ND	5	ug/L	11/20/06		R/J	SW8260
Tetrahydrofuran (THF)	ND	10	ug/L	11/20/06		R/J	SW8260
Toluene	ND	5	ug/L	11/20/06		R/J	SW8260
Total Xylenes	ND	5	ug/L	11/20/06		R/J	SW8260
trans-1,2-Dichloroethene	ND	5	ug/L	11/20/06		R/J	SW8260
trans-1,3-Dichloropropene	ND	5	ug/L	11/20/06		R/J	SW8260
trans-1,4-dichloro-2-butene	ND	10	ug/L	11/20/06		R/J	SW8260
Trichloroethene	ND	5	ug/L	11/20/06		R/J	SW8260
Trichlorofluoromethane	ND	5	ug/L	11/20/06		R/J	SW8260
Trichlorotrifluoroethane	ND	5	ug/L	11/20/06		R/J	SW8260
Vinyl chloride	ND	5	ug/L	11/20/06		R/J	SW8260
QA/QC Surrogates							
% 1,2-dichlorobenzene-d4	97		%	11/20/06		R/J	SW8260
% Bromofluorobenzene	94		%	11/20/06		R/J	SW8260
% Dibromofluoromethane	101		%	11/20/06		R/J	SW8260
% Toluene-d8	100		%	11/20/06		R/J	SW8260

Comments:

If there are any questions regarding this data, please call Phoenix Client Services at extension 200.
ND=Not detected BDL=Below Detection Limit RL=Reporting Limit

Phyllis Shiller

Phyllis Shiller, Laboratory Director
November 30, 2006

PHOENIX

Environmental Laboratories, Inc.
587 East Middle Turnpike, P.O.Box 370, Manchester, CT 06040
Tel. (860) 645-1102 Fax (860) 645-0823

Analysis Report
November 30, 2006

FOR: Attn: Ms. Aimee Gates
CT Male Associates, PC
50 Century Hill Drive
Latham, NY 12110

Sample Information		Custody Information		Date	Time
Matrix:	WATER	Collected by:		11/17/06	11:25
Location Code:	CT-MALE	Received by:	LP	11/20/06	9:00
Rush Request:		Analyzed by:	see "By" below		
P.O.#:	06-6448				

SDG I.D.: GAH70835
Phoenix I.D.: AH70845

Laboratory Data

Client ID: OLD CHAMPLAIN MILL MW-11

Parameter	Result	RL	Units	Date	Time	By	Reference
Silver	< 0.001	0.001	mg/L	11/30/06		EKT	6010/200.7
Arsenic	< 0.004	0.004	mg/L	11/30/06		EKT	6010/200.7
Barium	0.184	0.002	mg/L	11/30/06		EKT	6010/200.7
Cadmium	< 0.001	0.001	mg/L	11/30/06		EKT	6010/200.7
Chromium	0.007	0.001	mg/L	11/30/06		EKT	6010/200.7
Mercury	< 0.0002	0.0002	mg/L	11/21/06		RS	7470/E245.1
Lead (Furnace)	0.013	0.001	mg/L	11/21/06		RS	7421/S3113B
Selenium	< 0.01	0.01	mg/L	11/30/06		EKT	6010/200.7
Mercury Digestion	Completed			11/21/06		D	E245.1
PCB Extraction	Completed			11/20/06		O	SW3510/3520
Total Metals Digestion	Completed			11/20/06		AG	
Polychlorinated Biphenyls							
PCB-1016	ND	0.5	ug/L	11/21/06		MH	608/ 8082
PCB-1221	ND	0.5	ug/L	11/21/06		MH	608/ 8082
PCB-1232	ND	0.5	ug/L	11/21/06		MH	608/ 8082
PCB-1242	ND	0.5	ug/L	11/21/06		MH	608/ 8082
PCB-1248	ND	0.5	ug/L	11/21/06		MH	608/ 8082
PCB-1254	ND	0.5	ug/L	11/21/06		MH	608/ 8082
PCB-1260	ND	0.5	ug/L	11/21/06		MH	608/ 8082
PCB-1262	ND	0.5	ug/L	11/21/06		MH	608/ 8082
PCB-1268	ND	0.5	ug/L	11/21/06		MH	608/ 8082
QA/QC Surrogates							
% DCBP (Surrogate Rec)	104		%	11/21/06		MH	608/ 8082
% TCMX (Surrogate Rec)	72		%	11/21/06		MH	608/ 8082

Client ID: OLD CHAMPLAIN MILL MW-11 Phoenix I.D.: AH70845

Parameter	Result	RL	Units	Date	Time	By	Reference
Volatiles							
1,1,1,2-Tetrachloroethane	ND	5	ug/L	11/21/06		R/J	SW8260
1,1,1-Trichloroethane	ND	5	ug/L	11/21/06		R/J	SW8260
1,1,2,2-Tetrachloroethane	ND	5	ug/L	11/21/06		R/J	SW8260
1,1,2-Trichloroethane	ND	5	ug/L	11/21/06		R/J	SW8260
1,1-Dichloroethane	ND	5	ug/L	11/21/06		R/J	SW8260
1,1-Dichloroethene	ND	5	ug/L	11/21/06		R/J	SW8260
1,1-Dichloropropene	ND	5	ug/L	11/21/06		R/J	SW8260
1,2,3-Trichlorobenzene	ND	5	ug/L	11/21/06		R/J	SW8260
1,2,3-Trichloropropane	ND	5	ug/L	11/21/06		R/J	SW8260
1,2,4-Trichlorobenzene	ND	5	ug/L	11/21/06		R/J	SW8260
1,2,4-Trimethylbenzene	ND	5	ug/L	11/21/06		R/J	SW8260
1,2-Dibromo-3-chloropropane	ND	5	ug/L	11/21/06		R/J	SW8260
1,2-Dichlorobenzene	ND	5	ug/L	11/21/06		R/J	SW8260
1,2-Dichloroethane	ND	5	ug/L	11/21/06		R/J	SW8260
1,2-Dichloropropane	ND	5	ug/L	11/21/06		R/J	SW8260
1,3,5-Trimethylbenzene	ND	5	ug/L	11/21/06		R/J	SW8260
1,3-Dichlorobenzene	ND	5	ug/L	11/21/06		R/J	SW8260
1,3-Dichloropropane	ND	5	ug/L	11/21/06		R/J	SW8260
1,4-Dichlorobenzene	ND	5	ug/L	11/21/06		R/J	SW8260
2,2-Dichloropropane	ND	5	ug/L	11/21/06		R/J	SW8260
2-Chlorotoluene	ND	5	ug/L	11/21/06		R/J	SW8260
2-Hexanone	ND	25	ug/L	11/21/06		R/J	SW8260
2-Isopropyltoluene	ND	5	ug/L	11/21/06		R/J	SW8260
4-Chlorotoluene	ND	5	ug/L	11/21/06		R/J	SW8260
4-Methyl-2-pentanone	ND	25	ug/L	11/21/06		R/J	SW8260
Acetone	ND	50	ug/L	11/21/06		R/J	SW8260
Acrylonitrile	ND	10	ug/L	11/21/06		R/J	SW8260
Benzene	ND	5	ug/L	11/21/06		R/J	SW8260
Bromobenzene	ND	5	ug/L	11/21/06		R/J	SW8260
Bromochloromethane	ND	5	ug/L	11/21/06		R/J	SW8260
Bromodichloromethane	ND	5	ug/L	11/21/06		R/J	SW8260
Bromoform	ND	5	ug/L	11/21/06		R/J	SW8260
Bromomethane	ND	5	ug/L	11/21/06		R/J	SW8260
Carbon Disulfide	ND	5	ug/L	11/21/06		R/J	SW8260
Carbon tetrachloride	ND	5	ug/L	11/21/06		R/J	SW8260
Chlorobenzene	ND	5	ug/L	11/21/06		R/J	SW8260
Chloroethane	ND	5	ug/L	11/21/06		R/J	SW8260
Chloroform	ND	5	ug/L	11/21/06		R/J	SW8260
Chloromethane	ND	5	ug/L	11/21/06		R/J	SW8260
cis-1,2-Dichloroethene	ND	5	ug/L	11/21/06		R/J	SW8260
cis-1,3-Dichloropropene	ND	5	ug/L	11/21/06		R/J	SW8260
Dibromochloromethane	ND	5	ug/L	11/21/06		R/J	SW8260

Client ID: OLD CHAMPLAIN MILL MW-11 Phoenix I.D.: AH70845

Parameter	Result	RL	Units	Date	Time	By	Reference
Dibromoethane	ND	5	ug/L	11/21/06		R/J	SW8260
Dibromomethane	ND	5	ug/L	11/21/06		R/J	SW8260
Dichlorodifluoromethane	ND	5	ug/L	11/21/06		R/J	SW8260
Ethylbenzene	ND	5	ug/L	11/21/06		R/J	SW8260
Hexachlorobutadiene	ND	5	ug/L	11/21/06		R/J	SW8260
Isopropylbenzene	ND	5	ug/L	11/21/06		R/J	SW8260
m&p-Xylene	ND	5	ug/L	11/21/06		R/J	SW8260
Methyl Ethyl Ketone	ND	60	ug/L	11/21/06		R/J	SW8260
Methyl t-butyl ether (MTBE)	ND	10	ug/L	11/21/06		R/J	SW8260
Methylene chloride	ND	5	ug/L	11/21/06		R/J	SW8260
n-Butylbenzene	ND	5	ug/L	11/21/06		R/J	SW8260
n-Propylbenzene	ND	5	ug/L	11/21/06		R/J	SW8260
Naphthalene	ND	5	ug/L	11/21/06		R/J	SW8260
o-Xylene	ND	5	ug/L	11/21/06		R/J	SW8260
p-Isopropyltoluene	ND	5	ug/L	11/21/06		R/J	SW8260
sec-Butylbenzene	ND	5	ug/L	11/21/06		R/J	SW8260
Styrene	ND	5	ug/L	11/21/06		R/J	SW8260
tert-Butylbenzene	ND	5	ug/L	11/21/06		R/J	SW8260
Tetrachloroethene	ND	5	ug/L	11/21/06		R/J	SW8260
Tetrahydrofuran (THF)	ND	10	ug/L	11/21/06		R/J	SW8260
Toluene	ND	5	ug/L	11/21/06		R/J	SW8260
Total Xylenes	ND	5	ug/L	11/21/06		R/J	SW8260
trans-1,2-Dichloroethene	ND	5	ug/L	11/21/06		R/J	SW8260
trans-1,3-Dichloropropene	ND	5	ug/L	11/21/06		R/J	SW8260
trans-1,4-dichloro-2-butene	ND	10	ug/L	11/21/06		R/J	SW8260
Trichloroethene	ND	5	ug/L	11/21/06		R/J	SW8260
Trichlorofluoromethane	ND	5	ug/L	11/21/06		R/J	SW8260
Trichlorotrifluoroethane	ND	5	ug/L	11/21/06		R/J	SW8260
Vinyl chloride	ND	5	ug/L	11/21/06		R/J	SW8260
QA/QC Surrogates							
% 1,2-dichlorobenzene-d4	98		%	11/21/06		R/J	SW8260
% Bromofluorobenzene	96		%	11/21/06		R/J	SW8260
% Dibromofluoromethane	96		%	11/21/06		R/J	SW8260
% Toluene-d8	98		%	11/21/06		R/J	SW8260

Comments:

If there are any questions regarding this data, please call Phoenix Client Services at extension 200.
ND=Not detected BDL=Below Detection Limit RL=Reporting Limit

Phyllis Shiller, Laboratory Director
November 30, 2006

PHOENIX

Environmental Laboratories, Inc.
587 East Middle Turnpike, P.O.Box 370, Manchester, CT 06040
Tel. (860) 645-1102 Fax (860) 645-0823

Analysis Report
November 30, 2006

FOR: Attn: Ms. Aimee Gates
CT Male Associates, PC
50 Century Hill Drive
Latham, NY 12110

Sample Information		Custody Information		Date	Time
Matrix:	WATER	Collected by:		11/17/06	8:00
Location Code:	CT-MALE	Received by:	LP	11/20/06	9:00
Rush Request:		Analyzed by:	see "By" below		
P.O.#:	06-6448				

SDG I.D.: GAH70835
Phoenix I.D.: AH70846

Laboratory Data

Client ID: OLD CHAMPLAIN MILL MW-12

Parameter	Result	RL	Units	Date	Time	By	Reference
Semi-Volatile Extraction	Completed			11/20/06		O/K	SW3510/3520
Volatiles							
1,1,1,2-Tetrachloroethane	ND	5	ug/L	11/21/06		R/J	SW8260
1,1,1-Trichloroethane	ND	5	ug/L	11/21/06		R/J	SW8260
1,1,2,2-Tetrachloroethane	ND	5	ug/L	11/21/06		R/J	SW8260
1,1,2-Trichloroethane	ND	5	ug/L	11/21/06		R/J	SW8260
1,1-Dichloroethane	ND	5	ug/L	11/21/06		R/J	SW8260
1,1-Dichloroethene	ND	5	ug/L	11/21/06		R/J	SW8260
1,1-Dichloropropene	ND	5	ug/L	11/21/06		R/J	SW8260
1,2,3-Trichlorobenzene	ND	5	ug/L	11/21/06		R/J	SW8260
1,2,3-Trichloropropane	ND	5	ug/L	11/21/06		R/J	SW8260
1,2,4-Trichlorobenzene	ND	5	ug/L	11/21/06		R/J	SW8260
1,2,4-Trimethylbenzene	ND	5	ug/L	11/21/06		R/J	SW8260
1,2-Dibromo-3-chloropropane	ND	5	ug/L	11/21/06		R/J	SW8260
1,2-Dichlorobenzene	ND	5	ug/L	11/21/06		R/J	SW8260
1,2-Dichloroethane	ND	5	ug/L	11/21/06		R/J	SW8260
1,2-Dichloropropane	ND	5	ug/L	11/21/06		R/J	SW8260
1,3,5-Trimethylbenzene	ND	5	ug/L	11/21/06		R/J	SW8260
1,3-Dichlorobenzene	ND	5	ug/L	11/21/06		R/J	SW8260
1,3-Dichloropropane	ND	5	ug/L	11/21/06		R/J	SW8260
1,4-Dichlorobenzene	ND	5	ug/L	11/21/06		R/J	SW8260
2,2-Dichloropropane	ND	5	ug/L	11/21/06		R/J	SW8260
2-Chlorotoluene	ND	5	ug/L	11/21/06		R/J	SW8260
2-Hexanone	ND	25	ug/L	11/21/06		R/J	SW8260

Client ID: OLD CHAMPLAIN MILL MW-12 Phoenix I.D.: AH70846

Parameter	Result	RL	Units	Date	Time	By	Reference
2-Isopropyltoluene	ND	5	ug/L	11/21/06		R/J	SW8260
4-Chlorotoluene	ND	5	ug/L	11/21/06		R/J	SW8260
4-Methyl-2-pentanone	ND	25	ug/L	11/21/06		R/J	SW8260
Acetone	ND	50	ug/L	11/21/06		R/J	SW8260
Acrylonitrile	ND	10	ug/L	11/21/06		R/J	SW8260
Benzene	ND	5	ug/L	11/21/06		R/J	SW8260
Bromobenzene	ND	5	ug/L	11/21/06		R/J	SW8260
Bromochloromethane	ND	5	ug/L	11/21/06		R/J	SW8260
Bromodichloromethane	ND	5	ug/L	11/21/06		R/J	SW8260
Bromoform	ND	5	ug/L	11/21/06		R/J	SW8260
Bromomethane	ND	5	ug/L	11/21/06		R/J	SW8260
Carbon Disulfide	ND	5	ug/L	11/21/06		R/J	SW8260
Carbon tetrachloride	ND	5	ug/L	11/21/06		R/J	SW8260
Chlorobenzene	ND	5	ug/L	11/21/06		R/J	SW8260
Chloroethane	ND	5	ug/L	11/21/06		R/J	SW8260
Chloroform	ND	5	ug/L	11/21/06		R/J	SW8260
Chloromethane	ND	5	ug/L	11/21/06		R/J	SW8260
cis-1,2-Dichloroethene	ND	5	ug/L	11/21/06		R/J	SW8260
cis-1,3-Dichloropropene	ND	5	ug/L	11/21/06		R/J	SW8260
Dibromochloromethane	ND	5	ug/L	11/21/06		R/J	SW8260
Dibromoethane	ND	5	ug/L	11/21/06		R/J	SW8260
Dibromomethane	ND	5	ug/L	11/21/06		R/J	SW8260
Dichlorodifluoromethane	ND	5	ug/L	11/21/06		R/J	SW8260
Ethylbenzene	ND	5	ug/L	11/21/06		R/J	SW8260
Hexachlorobutadiene	ND	5	ug/L	11/21/06		R/J	SW8260
Isopropylbenzene	ND	5	ug/L	11/21/06		R/J	SW8260
m&p-Xylene	ND	5	ug/L	11/21/06		R/J	SW8260
Methyl Ethyl Ketone	ND	60	ug/L	11/21/06		R/J	SW8260
Methyl t-butyl ether (MTBE)	ND	10	ug/L	11/21/06		R/J	SW8260
Methylene chloride	ND	5	ug/L	11/21/06		R/J	SW8260
n-Butylbenzene	ND	5	ug/L	11/21/06		R/J	SW8260
n-Propylbenzene	ND	5	ug/L	11/21/06		R/J	SW8260
Naphthalene	ND	5	ug/L	11/21/06		R/J	SW8260
o-Xylene	ND	5	ug/L	11/21/06		R/J	SW8260
p-Isopropyltoluene	ND	5	ug/L	11/21/06		R/J	SW8260
sec-Butylbenzene	ND	5	ug/L	11/21/06		R/J	SW8260
Styrene	ND	5	ug/L	11/21/06		R/J	SW8260
tert-Butylbenzene	ND	5	ug/L	11/21/06		R/J	SW8260
Tetrachloroethene	ND	5	ug/L	11/21/06		R/J	SW8260
Tetrahydrofuran (THF)	ND	10	ug/L	11/21/06		R/J	SW8260
Toluene	ND	5	ug/L	11/21/06		R/J	SW8260
Total Xylenes	ND	5	ug/L	11/21/06		R/J	SW8260
trans-1,2-Dichloroethene	ND	5	ug/L	11/21/06		R/J	SW8260
trans-1,3-Dichloropropene	ND	5	ug/L	11/21/06		R/J	SW8260

Client ID: OLD CHAMPLAIN MILL MW-12 Phoenix I.D.: AH70846

Parameter	Result	RL	Units	Date	Time	By	Reference
trans-1,4-dichloro-2-butene	ND	10	ug/L	11/21/06		R/J	SW8260
Trichloroethene	ND	5	ug/L	11/21/06		R/J	SW8260
Trichlorofluoromethane	ND	5	ug/L	11/21/06		R/J	SW8260
Trichlorotrifluoroethane	ND	5	ug/L	11/21/06		R/J	SW8260
Vinyl chloride	ND	5	ug/L	11/21/06		R/J	SW8260
QA/QC Surrogates							
% 1,2-dichlorobenzene-d4	97		%	11/21/06		R/J	SW8260
% Bromofluorobenzene	94		%	11/21/06		R/J	SW8260
% Dibromofluoromethane	94		%	11/21/06		R/J	SW8260
% Toluene-d8	98		%	11/21/06		R/J	SW8260
Semivolatiles							
1,2,4-Trichlorobenzene	ND	10	ug/L	11/21/06		KCA	SW 8270
1,2-Dichlorobenzene	ND	10	ug/L	11/21/06		KCA	SW 8270
1,2-Diphenylhydrazine	ND	10	ug/L	11/21/06		KCA	SW 8270
1,3-Dichlorobenzene	ND	10	ug/L	11/21/06		KCA	SW 8270
1,4-Dichlorobenzene	ND	10	ug/L	11/21/06		KCA	SW 8270
2,4,5-Trichlorophenol	ND	10	ug/L	11/21/06		KCA	SW 8270
2,4,6-Trichlorophenol	ND	10	ug/L	11/21/06		KCA	SW 8270
2,4-Dichlorophenol	ND	10	ug/L	11/21/06		KCA	SW 8270
2,4-Dimethylphenol	ND	10	ug/L	11/21/06		KCA	SW 8270
2,4-Dinitrophenol	ND	51	ug/L	11/21/06		KCA	SW 8270
2,4-Dinitrotoluene	ND	10	ug/L	11/21/06		KCA	SW 8270
2,6-Dichlorophenol	ND	10	ug/L	11/21/06		KCA	SW 8270
2,6-Dinitrotoluene	ND	10	ug/L	11/21/06		KCA	SW 8270
2-Chloronaphthalene	ND	10	ug/L	11/21/06		KCA	SW 8270
2-Chlorophenol	ND	10	ug/L	11/21/06		KCA	SW 8270
2-Methylnaphthalene	ND	10	ug/L	11/21/06		KCA	SW 8270
2-Methylphenol (o-cresol)	ND	10	ug/L	11/21/06		KCA	SW 8270
2-Nitroaniline	ND	51	ug/L	11/21/06		KCA	SW 8270
2-Nitrophenol	ND	10	ug/L	11/21/06		KCA	SW 8270
3&4-Methylphenol (m&p-cresol)	ND	10	ug/L	11/21/06		KCA	SW 8270
3,3'-Dichlorobenzidine	ND	20	ug/L	11/21/06		KCA	SW 8270
3-Nitroaniline	ND	51	ug/L	11/21/06		KCA	SW 8270
4,6-Dinitro-2-methylphenol	ND	51	ug/L	11/21/06		KCA	SW 8270
4-Bromophenyl phenyl ether	ND	10	ug/L	11/21/06		KCA	SW 8270
4-Chloro-3-methylphenol	ND	20	ug/L	11/21/06		KCA	SW 8270
4-Chloroaniline	ND	20	ug/L	11/21/06		KCA	SW 8270
4-Chlorophenyl phenyl ether	ND	10	ug/L	11/21/06		KCA	SW 8270
4-Nitroaniline	ND	51	ug/L	11/21/06		KCA	SW 8270
4-Nitrophenol	ND	51	ug/L	11/21/06		KCA	SW 8270
Acenaphthene	ND	10	ug/L	11/21/06		KCA	SW 8270
Acenaphthylene	ND	10	ug/L	11/21/06		KCA	SW 8270
Anthracene	ND	10	ug/L	11/21/06		KCA	SW 8270

Client ID: OLD CHAMPLAIN MILL MW-12 Phoenix I.D.: AH70846

Parameter	Result	RL	Units	Date	Time	By	Reference
Benz(a)anthracene	ND	10	ug/L	11/21/06		KCA	SW 8270
Benzidine	ND	10	ug/L	11/21/06		KCA	SW 8270
Benzo(a)pyrene	ND	10	ug/L	11/21/06		KCA	SW 8270
Benzo(b)fluoranthene	ND	10	ug/L	11/21/06		KCA	SW 8270
Benzo(ghi)perylene	ND	10	ug/L	11/21/06		KCA	SW 8270
Benzo(k)fluoranthene	ND	10	ug/L	11/21/06		KCA	SW 8270
Benzoic acid	ND	51	ug/L	11/21/06		KCA	SW 8270
Benzyl alcohol	ND	20	ug/L	11/21/06		KCA	SW 8270
Benzyl butyl phthalate	ND	10	ug/L	11/21/06		KCA	SW 8270
Bis(2-chloroethoxy)methane	ND	10	ug/L	11/21/06		KCA	SW 8270
Bis(2-chloroethyl)ether	ND	10	ug/L	11/21/06		KCA	SW 8270
Bis(2-chloroisopropyl)ether	ND	10	ug/L	11/21/06		KCA	SW 8270
Bis(2-ethylhexyl)phthalate	ND	10	ug/L	11/21/06		KCA	SW 8270
Chrysene	ND	10	ug/L	11/21/06		KCA	SW 8270
Di-n-butylphthalate	ND	10	ug/L	11/21/06		KCA	SW 8270
Di-n-octylphthalate	ND	10	ug/L	11/21/06		KCA	SW 8270
Dibenz(a,h)anthracene	ND	10	ug/L	11/21/06		KCA	SW 8270
Dibenzofuran	ND	10	ug/L	11/21/06		KCA	SW 8270
Diethyl phthalate	ND	10	ug/L	11/21/06		KCA	SW 8270
Dimethylphthalate	ND	10	ug/L	11/21/06		KCA	SW 8270
Fluoranthene	ND	10	ug/L	11/21/06		KCA	SW 8270
Fluorene	ND	10	ug/L	11/21/06		KCA	SW 8270
Hexachlorobenzene	ND	10	ug/L	11/21/06		KCA	SW 8270
Hexachlorobutadiene	ND	10	ug/L	11/21/06		KCA	SW 8270
Hexachlorocyclopentadiene	ND	10	ug/L	11/21/06		KCA	SW 8270
Hexachloroethane	ND	10	ug/L	11/21/06		KCA	SW 8270
Indeno(1,2,3-cd)pyrene	ND	10	ug/L	11/21/06		KCA	SW 8270
Isophorone	ND	10	ug/L	11/21/06		KCA	SW 8270
N-Nitrosodi-n-propylamine	ND	10	ug/L	11/21/06		KCA	SW 8270
N-Nitrosodimethylamine	ND	10	ug/L	11/21/06		KCA	SW 8270
N-Nitrosodiphenylamine	ND	10	ug/L	11/21/06		KCA	SW 8270
Naphthalene	ND	10	ug/L	11/21/06		KCA	SW 8270
Nitrobenzene	ND	10	ug/L	11/21/06		KCA	SW 8270
Pentachlorophenol	ND	10	ug/L	11/21/06		KCA	SW 8270
Phenanthrene	ND	10	ug/L	11/21/06		KCA	SW 8270
Phenol	ND	10	ug/L	11/21/06		KCA	SW 8270
Pyrene	ND	10	ug/L	11/21/06		KCA	SW 8270
Pyridine	ND	10	ug/L	11/21/06		KCA	SW 8270
<u>QA/QC Surrogates</u>							
% 2,4,6-Tribromophenol	66		%	11/21/06		KCA	SW 8270
% 2-Fluorobiphenyl	54		%	11/21/06		KCA	SW 8270
% 2-Fluorophenol	40		%	11/21/06		KCA	SW 8270
% Nitrobenzene-d5	52		%	11/21/06		KCA	SW 8270
% Phenol-d5	42		%	11/21/06		KCA	SW 8270

Client ID: OLD CHAMPLAIN MILL MW-12 Phoenix I.D.: AH70846

Parameter	Result	RL	Units	Date	Time	By	Reference
% Terphenyl-d14	*NR		%	11/21/06		KCA	SW 8270

Comments:

* Poor surrogate recovery was observed. The other surrogates associated with this sample were within QA/QC criteria. No further action was necessary.

If there are any questions regarding this data, please call Phoenix Client Services at extension 200.

ND=Not detected BDL=Below Detection Limit RL=Reporting Limit

Phyllis Shiller, Laboratory Director
November 30, 2006

PHOENIX

Environmental Laboratories, Inc.
587 East Middle Turnpike, P.O.Box 370, Manchester, CT 06040
Tel. (860) 645-1102 Fax (860) 645-0823

ACCREDITED IN ACCORDANCE WITH nelac

Analysis Report

November 30, 2006

FOR: Attn: Ms. Aimee Gates
CT Male Associates, PC
50 Century Hill Drive
Latham, NY 12110

Sample Information		Custody Information		Date	Time
Matrix:	WATER	Collected by:		11/16/06	0:00
Location Code:	CT-MALE	Received by:	LP	11/20/06	9:00
Rush Request:		Analyzed by:	see "By" below		
P.O.#:	06-6448				

SDG I.D.: GAH70835
Phoenix I.D.: AH70890

Laboratory Data

Client ID: OLD CHAMPLAIN MILL TRIP BLANK

Parameter	Result	RL	Units	Date	Time	By	Reference
Volatiles							
1,1,1,2-Tetrachloroethane	ND	5	ug/L	11/20/06		R/J	SW8260
1,1,1-Trichloroethane	ND	5	ug/L	11/20/06		R/J	SW8260
1,1,2,2-Tetrachloroethane	ND	5	ug/L	11/20/06		R/J	SW8260
1,1,2-Trichloroethane	ND	5	ug/L	11/20/06		R/J	SW8260
1,1-Dichloroethane	ND	5	ug/L	11/20/06		R/J	SW8260
1,1-Dichloroethene	ND	5	ug/L	11/20/06		R/J	SW8260
1,1-Dichloropropene	ND	5	ug/L	11/20/06		R/J	SW8260
1,2,3-Trichlorobenzene	ND	5	ug/L	11/20/06		R/J	SW8260
1,2,3-Trichloropropane	ND	5	ug/L	11/20/06		R/J	SW8260
1,2,4-Trichlorobenzene	ND	5	ug/L	11/20/06		R/J	SW8260
1,2,4-Trimethylbenzene	ND	5	ug/L	11/20/06		R/J	SW8260
1,2-Dibromo-3-chloropropane	ND	5	ug/L	11/20/06		R/J	SW8260
1,2-Dichlorobenzene	ND	5	ug/L	11/20/06		R/J	SW8260
1,2-Dichloroethane	ND	5	ug/L	11/20/06		R/J	SW8260
1,2-Dichloropropane	ND	5	ug/L	11/20/06		R/J	SW8260
1,3,5-Trimethylbenzene	ND	5	ug/L	11/20/06		R/J	SW8260
1,3-Dichlorobenzene	ND	5	ug/L	11/20/06		R/J	SW8260
1,3-Dichloropropane	ND	5	ug/L	11/20/06		R/J	SW8260
1,4-Dichlorobenzene	ND	5	ug/L	11/20/06		R/J	SW8260
2,2-Dichloropropane	ND	5	ug/L	11/20/06		R/J	SW8260
2-Chlorotoluene	ND	5	ug/L	11/20/06		R/J	SW8260
2-Hexanone	ND	25	ug/L	11/20/06		R/J	SW8260
2-Isopropyltoluene	ND	5	ug/L	11/20/06		R/J	SW8260

Client ID: OLD CHAMPLAIN MILL TRIP BLANK — Phoenix I.D.: AH70890

Parameter	Result	RL	Units	Date	Time	By	Reference
1-Chlorotoluene	ND	5	ug/L	11/20/06		R/J	SW8260
1-Methyl-2-pentanone	ND	25	ug/L	11/20/06		R/J	SW8260
Acetone	ND	50	ug/L	11/20/06		R/J	SW8260
Acrylonitrile	ND	10	ug/L	11/20/06		R/J	SW8260
Benzene	ND	5	ug/L	11/20/06		R/J	SW8260
Bromobenzene	ND	5	ug/L	11/20/06		R/J	SW8260
Bromochloromethane	ND	5	ug/L	11/20/06		R/J	SW8260
Bromodichloromethane	ND	5	ug/L	11/20/06		R/J	SW8260
Bromoform	ND	5	ug/L	11/20/06		R/J	SW8260
Bromomethane	ND	5	ug/L	11/20/06		R/J	SW8260
Carbon Disulfide	ND	5	ug/L	11/20/06		R/J	SW8260
Carbon tetrachloride	ND	5	ug/L	11/20/06		R/J	SW8260
Chlorobenzene	ND	5	ug/L	11/20/06		R/J	SW8260
Chloroethane	ND	5	ug/L	11/20/06		R/J	SW8260
Chloroform	ND	5	ug/L	11/20/06		R/J	SW8260
Chloromethane	ND	5	ug/L	11/20/06		R/J	SW8260
cis-1,2-Dichloroethene	ND	5	ug/L	11/20/06		R/J	SW8260
cis-1,3-Dichloropropene	ND	5	ug/L	11/20/06		R/J	SW8260
Dibromochloromethane	ND	5	ug/L	11/20/06		R/J	SW8260
Dibromoethane	ND	5	ug/L	11/20/06		R/J	SW8260
Dibromomethane	ND	5	ug/L	11/20/06		R/J	SW8260
Dichlorodifluoromethane	ND	5	ug/L	11/20/06		R/J	SW8260
Ethylbenzene	ND	5	ug/L	11/20/06		R/J	SW8260
Hexachlorobutadiene	ND	5	ug/L	11/20/06		R/J	SW8260
Isopropylbenzene	ND	5	ug/L	11/20/06		R/J	SW8260
m&p-Xylene	ND	5	ug/L	11/20/06		R/J	SW8260
Methyl Ethyl Ketone	ND	60	ug/L	11/20/06		R/J	SW8260
Methyl t-butyl ether (MTBE)	ND	10	ug/L	11/20/06		R/J	SW8260
Methylene chloride	ND	5	ug/L	11/20/06		R/J	SW8260
n-Butylbenzene	ND	5	ug/L	11/20/06		R/J	SW8260
n-Propylbenzene	ND	5	ug/L	11/20/06		R/J	SW8260
Naphthalene	ND	5	ug/L	11/20/06		R/J	SW8260
o-Xylene	ND	5	ug/L	11/20/06		R/J	SW8260
p-Isopropyltoluene	ND	5	ug/L	11/20/06		R/J	SW8260
sec-Butylbenzene	ND	5	ug/L	11/20/06		R/J	SW8260
Styrene	ND	5	ug/L	11/20/06		R/J	SW8260
tert-Butylbenzene	ND	5	ug/L	11/20/06		R/J	SW8260
Tetrachloroethene	ND	5	ug/L	11/20/06		R/J	SW8260
Tetrahydrofuran (THF)	ND	10	ug/L	11/20/06		R/J	SW8260
Toluene	ND	5	ug/L	11/20/06		R/J	SW8260
Total Xylenes	ND	5	ug/L	11/20/06		R/J	SW8260
trans-1,2-Dichloroethene	ND	5	ug/L	11/20/06		R/J	SW8260
trans-1,3-Dichloropropene	ND	5	ug/L	11/20/06		R/J	SW8260
trans-1,4-dichloro-2-butene	ND	10	ug/L	11/20/06		R/J	SW8260

Client ID: OLD CHAMPLAIN MILL TRIP BLANK | Phoenix I.D.: AH70890

Parameter	Result	RL	Units	Date	Time	By	Reference
Trichloroethene	ND	5	ug/L	11/20/06		R/J	SW8260
Trichlorofluoromethane	ND	5	ug/L	11/20/06		R/J	SW8260
Trichlorotrifluoroethane	ND	5	ug/L	11/20/06		R/J	SW8260
Vinyl chloride	ND	5	ug/L	11/20/06		R/J	SW8260
QA/QC Surrogates							
% 1,2-dichlorobenzene-d4	97		%	11/20/06		R/J	SW8260
% Bromofluorobenzene	90		%	11/20/06		R/J	SW8260
% Dibromofluoromethane	82		%	11/20/06		R/J	SW8260
% Toluene-d8	94		%	11/20/06		R/J	SW8260

Comments:

TRIP BLANK INCLUDED

If there are any questions regarding this data, please call Phoenix Client Services at extension 200.

ND=Not detected BDL=Below Detection Limit RL=Reporting Limit

Phyllis Shiller, Laboratory Director
November 30, 2006

PHOENIX

Environmental Laboratories, Inc.
587 East Middle Turnpike, P.O.Box 370, Manchester, CT 06040
Tel. (860) 645-1102 Fax (860) 645-0823

ACCREDITED IN ACCORDANCE WITH nelac

QA/QC Report

November 30, 2006

QA/QC Data

SDG I.D.: GAH70835

Parameter	Blank	Dup RPD	LCS %	LCSD %	LCS RPD	MS Rec %	MS Dup Rec %	RPD
QA/QC Batch 67885, Sample No: AH70835 (AH70835, AH70836, AH70837, AH70838, AH70839, AH70840, AH70841, AH70842, AH70843, AH70844, AH70845)								
Lead (Furnace)	BDL		95.3			90.4	91.2	0.9
QA/QC Batch 67902, Sample No: AH70835 (AH70835, AH70836, AH70837, AH70838, AH70839, AH70840, AH70841, AH70842, AH70843, AH70844, AH70845)								
Mercury	BDL	NC	105			105	103	1.9
QA/QC Batch 67884, Sample No: AH70839 (AH70839, AH70840, AH70841, AH70842, AH70843, AH70844, AH70845)								
ICP Metals - Aqueous								
Aluminum	BDL	9.00	95.6	93.1	2.6	90.0	87.0	3.4
Antimony	BDL	NC	93.0	92.2	0.9	92.8	90.4	2.6
Arsenic	BDL	NC	95.1	93.4	1.8	95.5	93.0	2.7
[illegible]um	BDL	1.00	100	96.9	3.1	99.8	97.6	2.2
[illegible]llium	BDL	NC	99.8	97.8	2.0	99.2	97.3	1.9
Boron	BDL	---	---	---	NC	---	---	NC
Cadmium	BDL	NC	96.0	94.6	1.5	94.7	92.0	2.9
Calcium	BDL	---	---	---	NC	---	---	NC
Chromium	0.001	NC	101	97.4	3.6	98.2	96.3	2.0
Cobalt	BDL	NC	98.5	95.6	3.0	97.1	94.5	2.7
Copper	BDL	1.00	101	97.1	3.9	101	95.9	5.2
Iron	BDL	6.30	99.3	96.6	2.8	97.5	95.9	1.7
Lead	BDL	NC	96.4	93.8	2.7	96.0	94.0	2.1
Magnesium	BDL	---	---	---	NC	---	---	NC
Manganese	BDL	1.40	99.3	96.7	2.7	97.8	96.2	1.6
Molybdenum	BDL	---	---	---	NC	---	---	NC
Nickel	0.001	BDL	99.9	96.9	3.0	98.4	95.9	2.6
Phosphorus	0.021	---	---	---	NC	---	---	NC
Potassium	BDL	---	---	---	NC	---	---	NC
Selenium	BDL	NC	92.0	89.6	2.6	92.4	89.3	3.4
Silver	BDL	NC	94.0	92.6	1.5	93.2	90.9	2.5
Sodium	BDL	---	---	---	NC	---	---	NC
Thallium	BDL	NC	95.9	93.7	2.3	95.3	93.2	2.2
[illegible]	BDL	---	---	---	NC	---	---	NC
[illegible]nadium	BDL	1.80	102	98.4	3.6	100	97.6	2.4
Zinc	BDL	1.10	97.6	95.2	2.5	97.5	94.5	3.1

QA/QC Data

SDG I.D.: GAH70835

ameter	Blank	Dup RPD	LCS %	LCSD %	LCS RPD	MS Rec %	MS Dup Rec %	RPD
QA/QC Batch 67886, Sample No: AH70842 (AH70842, AH70843, AH70844, AH70845)								
Lead (Furnace)	BDL		93.3			93.3	94.1	0.9
QA/QC Batch 67883, Sample No: AH71092 (AH70835, AH70836, AH70837, AH70838)								
ICP Metals - Aqueous								
Aluminum	BDL	1.10	93.3	93.8	0.5	95.1	94.8	0.3
Antimony	BDL	NC	91.8	90.7	1.2	93.0	92.2	0.9
Arsenic	BDL	NC	92.5	92.7	0.2	94.3	94.0	0.3
Barium	BDL	NC	98.0	99.5	1.5	98.3	99.2	0.9
Beryllium	BDL	NC	97.2	97.4	0.2	98.0	97.8	0.2
Boron	BDL	---	---	---	NC	---	---	NC
Cadmium	BDL	NC	91.8	92.8	1.1	93.6	93.2	0.4
Calcium	BDL	---	---	---	NC	---	---	NC
Chromium	BDL	NC	96.9	98.0	1.1	96.6	98.0	1.4
Cobalt	BDL	NC	95.3	95.7	0.4	95.8	96.2	0.4
Copper	BDL	11.6	98.2	98.2	0.0	102	100	2.0
Iron	BDL	2.10	97.2	96.8	0.4	96.5	96.8	0.3
Lead	BDL	NC	92.3	94.3	2.1	94.0	95.0	1.1
Magnesium	BDL	---	---	---	NC	---	---	NC
ganese	BDL	BDL	96.9	96.6	0.3	96.3	96.8	0.5
ybdenum	BDL	---	---	---	NC	---	---	NC
Nickel	BDL	4.20	95.9	96.8	0.9	97.0	97.3	0.3
Phosphorus	BDL	---	---	---	NC	---	---	NC
Potassium	BDL	---	---	---	NC	---	---	NC
Selenium	BDL	NC	89.4	89.5	0.1	92.0	90.3	1.9
Silver	BDL	NC	92.4	92.2	0.2	93.0	93.6	0.6
Sodium	BDL	---	---	---	NC	---	---	NC
Thallium	BDL	NC	93.3	93.9	0.6	94.9	95.2	0.3
Tin	BDL	---	---	---	NC	---	---	NC
Vanadium	BDL	NC	98.0	97.9	0.1	98.1	99.4	1.3
Zinc	BDL	BDL	94.5	94.6	0.1	96.0	95.8	0.2

If there are any questions regarding this data, please call Phoenix Client Services at extension 200.

RPD - Relative Percent Difference
LCS - Laboratory Control Sample
LCSD - Laboratory Control Sample Duplicate
MS - Matrix Spike
MS Dup - Matrix Spike Duplicate
NC - No Criteria

Phyllis Shiller, Laboratory Director
November 30, 2006

PHOENIX

Environmental Laboratories, Inc.
587 East Middle Turnpike, P.O.Box 370, Manchester, CT 06040
Tel. (860) 645-1102 Fax (860) 645-0823

ACCREDITED IN ACCORDANCE WITH nelac

QA/QC Report

November 30, 2006

QA/QC Data

SDG I.D.: GAH70835

Parameter	Blank	LCS %	LCSD %	LCS RPD	MS Rec %	MS Dup Rec %	RPD
QA/QC Batch 67869, Sample No: AH65295 (AH70835, AH70836, AH70837, AH70838, AH70839, AH70840, AH70841, AH70842, AH70843, AH70844, AH70845)							
Polychlorinated Biphenyls							
PCB-1016	ND				77	93	18.8
PCB-1221	ND						
PCB-1232	ND						
PCB-1242	ND						
PCB-1248	ND						
PCB-1254	ND						
PCB-1260	ND				91	101	10.4
PCB-1262	ND						
3-1268	ND						
DCBP (Surrogate Rec)	67				77	83	7.5
% TCMX (Surrogate Rec)	80				63	82	26.2
Comment: A LCS and LCS Duplicate were performed instead of a matrix spike and matrix spike duplicate.							
QA/QC Batch 67907, Sample No: AH70835 (AH70835, AH70836, AH70837, AH70838, AH70839, AH70840, AH70841, AH70842, AH70843, AH70844, AH70845, AH70846)							
Volatiles							
1,1,1,2-Tetrachloroethane	ND	92	85	7.9	100	89	11.6
1,1,1-Trichloroethane	ND	93	86	7.8	101	91	10.4
1,1,2,2-Tetrachloroethane	ND	90	87	3.4	101	89	12.6
1,1,2-Trichloroethane	ND	96	87	9.8	103	90	13.5
1,1-Dichloroethane	ND	103	91	12.4	102	97	5.0
1,1-Dichloroethene	ND	105	96	9.0	113	102	10.2
1,1-Dichloropropene	ND	106	94	12.0	109	99	9.6
1,2,3-Trichlorobenzene	ND	101	77	27.0	92	97	5.3
1,2,3-Trichloropropane	ND	90	87	3.4	94	80	16.1
1,2,4-Trichlorobenzene	ND	98	81	19.0	95	95	0.0
1,2,4-Trimethylbenzene	ND	93	85	9.0	102	93	9.2
1,2-Dibromo-3-chloropropane	ND	88	87	1.1	88	81	8.3
1,2-Dichlorobenzene	ND	92	84	9.1	95	87	8.8
-Dichloroethane	ND	92	81	12.7	96	88	8.7
-Dichloropropane	ND	103	94	9.1	106	97	8.9
1,3,5-Trimethylbenzene	ND	93	86	7.8	102	91	11.4

QA/QC Data

SDG I.D.: GAH70835

ameter	Blank	LCS %	LCSD %	LCS RPD	MS Rec %	MS Dup Rec %	RPD
1,3-Dichlorobenzene	ND	94	88	6.6	101	91	10.4
1,3-Dichloropropane	ND	95	87	8.8	100	89	11.6
1,4-Dichlorobenzene	ND	95	85	11.1	100	95	5.1
2,2-Dichloropropane	ND	90	93	3.3	107	88	19.5
2-Chlorotoluene	ND	94	88	6.6	104	90	14.4
4-Chlorotoluene	ND	94	88	6.6	100	91	9.4
Benzene	ND	104	94	10.1	109	99	9.6
Bromobenzene	ND	94	90	4.3	102	92	10.3
Bromochloromethane	ND	94	89	5.5	101	95	6.1
Bromodichloromethane	ND	98	88	10.8	104	94	10.1
Bromoform	ND	90	84	6.9	90	84	6.9
Bromomethane	ND	128	80	46.2	97	124	24.4
Carbon tetrachloride	ND	96	88	8.7	108	95	12.8
Chlorobenzene	ND	95	89	6.5	103	90	13.5
Chloroethane	ND	121	102	17.0	110	107	2.8
Chloroform	ND	98	87	11.9	98	93	5.2
Chloromethane	ND	109	102	6.6	111	99	11.4
cis-1,2-Dichloroethene	ND	106	96	9.9	108	102	5.7
1,3-Dichloropropene	ND	104	95	9.0	108	98	9.7
romochloromethane	ND	95	85	11.1	97	88	9.7
Dibromoethane	ND	94	88	6.6	101	90	11.5
Dibromomethane	ND	91	82	10.4	98	86	13.0
Dichlorodifluoromethane	ND	99	92	7.3	117	104	11.8
Ethylbenzene	ND	97	92	5.3	107	93	14.0
Hexachlorobutadiene	ND	101	78	25.7	100	100	0.0
Isopropylbenzene	ND	106	100	5.8	106	96	9.9
m&p-Xylene	ND	98	90	8.5	106	95	10.9
Methyl Ethyl Ketone	ND						
Methyl t-butyl ether (MTBE)	ND	101	93	8.2	101	90	11.5
Methylene chloride	ND	89	81	9.4	94	85	10.1
n-Butylbenzene	ND	99	87	12.9	103	96	7.0
n-Propylbenzene	ND	96	90	6.5	106	92	14.1
Naphthalene	ND	107	80	28.9	94	103	9.1
o-Xylene	ND	98	94	4.2	102	90	12.5
p-Isopropyltoluene	ND	99	90	9.5	104	94	10.1
sec-Butylbenzene	ND	89	82	8.2	104	93	11.2
Styrene	ND	100	92	8.3	102	92	10.3
tert-Butylbenzene	ND	95	88	7.7	104	92	12.2
Tetrachloroethene	ND	95	90	5.4	103	93	10.2
luene	ND	101	92	9.3	109	96	12.7
Total Xylenes	ND						
trans-1,2-Dichloroethene	ND	102	94	8.2	106	101	4.8

QA/QC Data

SDG I.D.: GAH70835

ameter	Blank	LCS %	LCSD %	LCS RPD	MS Rec %	MS Dup Rec %	RPD
trans-1,3-Dichloropropene	ND	100	88	12.8	104	100	3.9
Trichloroethene	ND	95	88	7.7	105	97	7.9
Trichlorofluoromethane	ND	<70	<70	NC	<70	<70	NC
Vinyl chloride	ND	113	107	5.5	116	102	12.8
% 1,2-dichlorobenzene-d4	95	101	100	1.0	100	100	0.0
% Bromofluorobenzene	95	101	100	1.0	100	97	3.0
% Dibromofluoromethane	97	99	96	3.1	98	100	2.0
% Toluene-d8	97	102	102	0.0	104	102	1.9
QA/QC Batch 67881, Sample No: AH70846 (AH70846)							
Semivolatiles							
1,2,4-Trichlorobenzene	ND				62	61	1.6
1,2-Dichlorobenzene	ND				60	58	3.4
1,2-Diphenylhydrazine	ND						
1,3-Dichlorobenzene	ND				58	56	3.5
1,4-Dichlorobenzene	ND				58	56	3.5
2,4,5-Trichlorophenol	ND				76	75	1.3
2,4,6-Trichlorophenol	ND				74	73	1.4
2,4-Dichlorophenol	ND				68	66	3.0
Dimethylphenol	ND				57	63	10.0
Dinitrophenol	ND				98	96	2.1
2,4-Dinitrotoluene	ND				73	71	2.8
2,6-Dichlorophenol	ND						
2,6-Dinitrotoluene	ND				71	69	2.9
2-Chloronaphthalene	ND				65	64	1.6
2-Chlorophenol	ND				60	58	3.4
2-Methylnaphthalene	ND				64	62	3.2
2-Methylphenol (o-cresol)	ND				63	61	3.2
2-Nitroaniline	ND						
2-Nitrophenol	ND				59	58	1.7
3&4-Methylphenol (m&p-cresol)	ND				63	61	3.2
3,3'-Dichlorobenzidine	ND						
3-Nitroaniline	ND				95	86	9.9
4,6-Dinitro-2-methylphenol	ND				84	83	1.2
4-Bromophenyl phenyl ether	ND				71	69	2.9
4-Chloro-3-methylphenol	ND				74	72	2.7
4-Chloroaniline	ND				44		NC
4-Chlorophenyl phenyl ether	ND				71	68	4.3
4-Nitroaniline	ND				69	67	2.9
itrophenol	ND				87	79	9.6
naphthene	ND				64	63	1.6
Acenaphthylene	ND				59	57	3.4

QA/QC Data

SDG I.D.: GAH70835

ameter	Blank	LCS %	LCSD %	LCS RPD	MS Rec %	MS Dup Rec %	RPD
Anthracene	ND				68	65	4.5
Benz(a)anthracene	ND				73	70	4.2
Benzidine	ND						
Benzo(a)pyrene	ND				63	57	10.0
Benzo(b)fluoranthene	ND				69	65	6.0
Benzo(ghi)perylene	ND				69	65	6.0
Benzo(k)fluoranthene	ND				75	71	5.5
Benzoic acid	ND						
Benzyl alcohol	ND				94	92	2.2
Benzyl butyl phthalate	ND				84	79	6.1
Bis(2-chloroethoxy)methane	ND				63	61	3.2
Bis(2-chloroethyl)ether	ND				64	62	3.2
Bis(2-chloroisopropyl)ether	ND				65	63	3.1
Bis(2-ethylhexyl)phthalate	ND				82	79	3.7
Chrysene	ND				70	68	2.9
Di-n-butylphthalate	ND				69	67	2.9
Di-n-octylphthalate	ND				81	79	2.5
Dibenz(a,h)anthracene	ND				70	67	4.4
nzofuran	ND				66	64	3.1
hyl phthalate	ND				70	68	2.9
Dimethylphthalate	ND				70	68	2.9
Fluoranthene	ND				73	71	2.8
Fluorene	ND				69	67	2.9
Hexachlorobenzene	ND				67	65	3.0
Hexachlorobutadiene	ND				63	61	3.2
Hexachlorocyclopentadiene	ND						
Hexachloroethane	ND				59	57	3.4
Indeno(1,2,3-cd)pyrene	ND				69	66	4.4
Isophorone	ND				63	62	1.6
N-Nitrosodi-n-propylamine	ND				63	61	3.2
N-Nitrosodimethylamine	ND				56	52	7.4
N-Nitrosodiphenylamine	ND						
Naphthalene	ND				62	61	1.6
Nitrobenzene	ND				63	62	1.6
Pentachlorophenol	ND				109	107	1.9
Phenanthrene	ND				68	66	3.0
Phenol	ND				61	56	8.5
Pyrene	ND				70	67	4.4
Pyridine	ND						
,4,6-Tribromophenol	74				84	79	6.1
% 2-Fluorobiphenyl	64				63	62	1.6
% 2-Fluorophenol	52				52	48	8.0

QA/QC Data

SDG I.D.: GAH70835

ameter	Blank	LCS %	LCSD %	LCS RPD	MS Rec %	MS Dup Rec %	RPD
% Nitrobenzene-d5	60				62	60	3.3
% Phenol-d5	55				57	51	11.1
% Terphenyl-d14	54				69	58	17.3

Comment: A LCS and LCS Duplicate were performed instead of a matrix spike and matrix spike duplicate.

QA/QC Batch 67969, Sample No: AH70943 (AH70890)

Volatiles

1,1,1,2-Tetrachloroethane	ND	103	107	3.8	112	112	0.0
1,1,1-Trichloroethane	ND	70	73	4.2	77	75	2.6
1,1,2,2-Tetrachloroethane	ND	93	99	6.3	107	106	0.9
1,1,2-Trichloroethane	ND	79	78	1.3	83	88	5.8
1,1-Dichloroethane	ND	85	86	1.2	93	90	3.3
1,1-Dichloroethene	ND	87	86	1.2	94	93	1.1
1,1-Dichloropropene	ND	76	84	10.0	88	85	3.5
1,2,3-Trichlorobenzene	ND	101	103	2.0	112	111	0.9
1,2,3-Trichloropropane	ND	117	122	4.2	114	111	2.7
1,2,4-Trichlorobenzene	ND	101	102	1.0	111	114	2.7
1,2,4-Trimethylbenzene	ND	102	106	3.8	118	115	2.6
1,2-Dibromo-3-chloropropane	ND	114	111	2.7	100	106	5.8
-Dichlorobenzene	ND	99	102	3.0	108	111	2.7
-Dichloroethane	ND	85	87	2.3	86	88	2.3
1,2-Dichloropropane	ND	80	85	6.1	87	86	1.2
1,3,5-Trimethylbenzene	ND	101	106	4.8	116	112	3.5
1,3-Dichlorobenzene	ND	98	102	4.0	112	110	1.8
1,3-Dichloropropane	ND	99	101	2.0	106	110	3.7
1,4-Dichlorobenzene	ND	99	102	3.0	116	114	1.7
2,2-Dichloropropane	ND	72	76	5.4	82	74	10.3
2-Chlorotoluene	ND	100	107	6.8	122	114	6.8
4-Chlorotoluene	ND	101	107	5.8	117	112	4.4
Benzene	ND	78	84	7.4	89	87	2.3
Bromobenzene	ND	96	104	8.0	114	107	6.3
Bromochloromethane	ND	68	68	0.0	75	77	2.6
Bromodichloromethane	ND	85	88	3.5	88	90	2.2
Bromoform	ND	110	108	1.8	110	116	5.3
Bromomethane	ND	133	105	23.5	123	151	20.4
Carbon tetrachloride	ND	88	91	3.4	94	93	1.1
Chlorobenzene	ND	98	103	5.0	109	111	1.8
Chloroethane	ND	102	91	11.4	92	101	9.3
Chloroform	ND	70	73	4.2	76	75	1.3
-Chloromethane	ND	86	88	2.3	90	90	0.0
-1,2-Dichloroethene	ND	71	71	0.0	78	77	1.3
cis-1,3-Dichloropropene	ND	87	86	1.2	91	95	4.3

QA/QC Data

SDG I.D.: GAH70835

ameter	Blank	LCS %	LCSD %	LCS RPD	MS Rec %	MS Dup Rec %	RPD
Dibromochloromethane	ND	103	110	6.6	115	118	2.6
Dibromoethane	ND	84	78	7.4	82	91	10.4
Dibromomethane	ND	79	80	1.3	83	86	3.6
Dichlorodifluoromethane	ND	85	84	1.2	100	103	3.0
Ethylbenzene	ND	99	105	5.9	109	112	2.7
Hexachlorobutadiene	ND	97	98	1.0	106	105	0.9
Isopropylbenzene	ND	107	117	8.9	122	114	6.8
m&p-Xylene	ND	102	105	2.9	111	116	4.4
Methyl Ethyl Ketone	ND						
Methyl t-butyl ether (MTBE)	ND	88	93	5.5	90	89	1.1
Methylene chloride	ND	87	84	3.5	90	93	3.3
n-Butylbenzene	ND	107	108	0.9	113	117	3.5
n-Propylbenzene	ND	101	109	7.6	120	113	6.0
Naphthalene	ND	103	113	9.3	121	114	6.0
o-Xylene	ND	102	101	1.0	104	110	5.6
p-Isopropyltoluene	ND	108	110	1.8	118	116	1.7
sec-Butylbenzene	ND	98	100	2.0	116	114	1.7
Styrene	ND	98	100	2.0	104	111	6.5
-Butylbenzene	ND	102	107	4.8	117	113	3.5
rachloroethene	ND	94	101	7.2	107	104	2.8
Toluene	ND	81	82	1.2	87	89	2.3
Total Xylenes	ND						
trans-1,2-Dichloroethene	ND	85	87	2.3	91	91	0.0
trans-1,3-Dichloropropene	ND	87	85	2.3	90	95	5.4
Trichloroethene	ND	78	84	7.4	89	86	3.4
Trichlorofluoromethane	ND	90	92	2.2	88	86	2.3
Vinyl chloride	ND	93	90	3.3	94	94	0.0
% 1,2-dichlorobenzene-d4	95	99	97	2.0	96	98	2.1
% Bromofluorobenzene	89	99	97	2.0	91	101	10.4
% Dibromofluoromethane	79	79	80	1.3	85	88	3.5
% Toluene-d8	95	96	94	2.1	93	97	4.2

If there are any questions regarding this data, please call Phoenix Client Services at extension 200.

RPD - Relative Percent Difference
LCS - Laboratory Control Sample
LCSD - Laboratory Control Sample Duplicate
MS - Matrix Spike
MS Dup - Matrix Spike Duplicate
NC - No Criteria

Phyllis Shiller, Laboratory Director
November 30, 2006

Temp 5°C ... of 1

PHOENIX *Environmental Laboratories, Inc.*

CHAIN OF CUSTODY RECORD

587 East Middle Turnpike, P.O. Box 370, Manchester, CT 06040
Email: service@phoenixlabs.com Fax (860) 645-0823
Client Services (860) 645-8726

Data Delivery (check one):
☐ Fax #:
☒ Email: a.gates@ctmale.com
Format: ☐ Excel ☒ Pdf ☐ Gis Key

Customer: C.T. Male Associates, P.C.
Address: 50 Century Hill Drive
Latham, NY 12110

Project: Old Champlain Mill
Report to: Aimee Gates
Invoice to: Aimee Gates

Project P.O: 06.6448
Phone #: 518-786-7551
Fax #: 518-786-7299

Client Sample - Information - Identification

Sampler's Signature: [signature] Date: 11/16/06 11/17/06

Matrix Code:
DW=drinking water WW=wastewater S=soil/solid O=Oil
GW=groundwater SL=sludge A=air X=Other

Analysis Request: VOCs EPA 8260 | PCBs | 8 RCRA Metals | SVOCs EPA 8270

Container types: Soil VOA Vial [ ] methanol [ ] Sod Bisulfate | GL Soil container ( )oz | GL Soil container ( )oz | 40 ml VOA Vial [ ] As is [X] HCl | GL Amber 1000ml [X] As is [ ] H2SO4 | PL As is [ ] 250ml [X] 500ml [ ] 1000ml | PL H2SO4 [ ] 250ml [ ] 500ml | PL HNO3 250ml | PL NaOH 250ml | Bacteria Bottle

Item #	Phoenix Sample #	Customer Sample Identification	Sample Matrix	Date Sampled	Time Sampled	VOCs EPA 8260	PCBs	8 RCRA Metals	SVOCs EPA 8270	40 ml VOA Vial	GL Amber 1000ml	PL 500ml
	70835	SW-9	SW	11/16/06	800A	X	X	X		3	1	1
	70836	MW-1	GW	11/17/06	1015	X	X	X		3	1	1
	70837	MW-2	GW	11/17/06	840	X	X	X		3	1	1
	70838	MW-3	GW	11/17/06	1430	X	X	X		3	1	1
	70839	MW-4	GW	11/17/06	1325	X	X	X		3	1	1
	70840	MW-5	GW	11/17/06	1215	X	X	X		3	1	1
	70841	MW-6	GW	11/17/06	1200	X	X	X		3	1	1
	70842	MW-7	GW	11/17/06	925	X	X	X		3	1	1
	70843	MW-8	GW	11/17/06	1445	X	X	X		3	1	1
	70844	MW-10	GW	11/17/06	1250	X	X	X		3	1	1
	70845	MW-11	GW	11/17/06	1125	X	X	X		3	1	1
	70846	MW-12	GW	11/17/06	800	X			X	3	1	

TRIP blank 70847

Relinquished by:	Accepted by:	Date:	Time:
[signature]	[signature]	11/17/06	1630
	[signature]	11-20-06	9:00

Comments, Special Requirements or Regulations:

Turnaround:
☐ 1 Day*
☐ 2 Days*
☐ 3 Days*
☒ Standard
☐ Other

* Surcharge Applies

Requirements for CT/RI
☐ Res. Criteria
☐ GW Protection
☐ GA Mobility
☐ GB Mobility
☐ SW Protection
☐ Res. Vol.
☐ Ind. Vol.
☐ RCP Certification

Requirements for MA
☐ GW-1
☐ GW-2
☐ GW-3
☐ S-1
☐ S-2
☐ S-3
☐ MCP Certification
☐ Other

EXHIBIT 4

2007 C.T. MALE SUPPLEMENTAL PHASE II ESA

August 6, 2007

Supplemental Phase II Environmental Site Assessment Old Champlain Mill 16-50 Poultney Street Village of Whitehall Washington County, New York

Prepared for:

GARY S. BOWITCH
744 Broadway
Albany, New York 12207

Prepared by:

C.T. MALE ASSOCIATES, P.C.
50 Century Hill Drive
P.O. Box 727
Latham, New York 12110
(518) 786-7400
FAX (518) 786-7299

C.T. Male Project No: 06.6448

Unauthorized alteration or addition to this document is a violation of Section 7209 Subdivision 2 of the New York State Education Law.

© Copyright 2007
C.T. MALE ASSOCIATES, P.C.

SUPPLEMENTAL PHASE II
ENVIRONMENTAL SITE ASSESSMENT REPORT
OLD CHAMPLAIN MILL

1.0 INTRODUCTION 1

2.0 METHOD OF INVESTIGATION 3

2.1 File Review 3
2.2 Groundwater Elevation Survey 3
2.3 Surface Soil Sampling Locations 4
2.4 Test Boring and Monitoring Well Locations 4
2.5 Drilling Method and Well Construction 5
2.6 Soil Screening and Sampling 5
2.7 Decontamination 6

3.0 FINDINGS 6

3.1 Surface Soils 6
3.2 Subsurface Conditions – Boring Locations 6
3.3 Soil Screening Results 9
3.4 Groundwater Conditions 10

4.0 ANALYTICAL RESULTS 11

4.1 Surface Soil Samples 11
4.2 Groundwater Within Monitoring Wells 12

5.0 DISCUSSION OF FINDINGS 15

APPENDICES

APPENDIX A: Figures/Maps

APPENDIX B: Subsurface Exploration Logs and Monitoring Well Construction Logs

APPENDIX C: Organic Vapor Headspace Analysis Logs

APPENDIX D: Laboratory Analysis Report for Surface Soils

APPENDIX E: Laboratory Analysis Report for Groundwater

1.0 INTRODUCTION

This report presents the findings of a Supplemental Phase II Environmental Site Assessment conducted at the Old Champlain Mill Site, which is located in the Village of Whitehall, Washington County, New York. A site location map is included in Appendix A as Figure 1.

The scope of the subsurface assessment was developed on the basis of the information and data gathered and evaluated as presented in the Phase I Environmental Site Assessment (ESA), dated August 8, 2006 and a Phase II ESA of the site dated December 22, 2006. The Phase I ESA identified the following recognized environmental conditions for the site:

- The site has been used for manufacturing purposes since 1916. Based on available information, it appears that the site used, stored and potentially disposed of chemical materials on the site. Municipal sewer was reportedly not available to the site until the mid 1970s. Prior to connection to the municipal sewer, discharge was reportedly to Wood Creek and to the Champlain Canal. Other disposal methods may have included septic systems, leach fields or dry wells.

- Various chemicals and petroleum products were previously used, stored and potentially disposed of on the site.

- The subject site has reportedly been impacted by several floods, possibly dating to the 1930s. According to a previous employee of the site, a flood which occurred in the 1980s impacted groundwater at the site.

- The site is bound to the south by a confirmed hazardous waste disposal facility. This facility appears to be immediately adjacent to the subject site. A groundwater monitoring well was installed on the subject site as a down-gradient monitoring point for the hazardous waste facility. A former gasoline station borders the site to the north on the opposite side of Poultney Street. An active leaking storage tank incident is listed for this facility.

- Fill materials from unknown sources appear to have been utilized at the subject site.

Based on these observations and findings, the Phase II ESA was proposed to evaluate the site for potential impacts to soil and groundwater. The Phase II ESA included a subsurface investigation which included the advancement of thirteen soil borings of which eleven were converted to groundwater monitoring wells, the collection of soil samples for field vapor screening and the collection and analysis of surface water and groundwater for laboratory analysis.

The following conditions were noted during the completion of the Phase II ESA:

The soils encountered at the site consisted of both fill and native deposits. The fill materials consisted of sand and gravel, brick, ash, cinders, weathered rock, silt and clay which were typically found from below grade to approximately 2-3 feet below grade. Beneath the fill, native silt and clay soils were encountered.

Screening of the soils at the test boring locations did not reveal elevated PID readings that would be representative of volatile organic compound (VOC) vapors.

The groundwater samples collected from monitoring wells MW-1 through MW-11 were analyzed for VOCs by EPA Method 8260, PCBs by EPA Method 8082 and the 8 RCRA Metals. MW-12 was analyzed for VOCS by EPA Method 8260 and semi-volatile organic compounds (SVOCs) by EPA Method 8270.

There were no PCBs detected above the laboratory method detection limits in the groundwater samples. No SVOCs were detected above the laboratory method detection limit in the groundwater sample from MW-12.

VOCs were detected above the laboratory method detection limits in the groundwater samples from MW-2 and MW-10. MW-2 was located to the north of the site building (in the area thought to possibly contain a dry well and north of the former spray paint booth) and MW-10 was located within the building foundation footprint in the area of the former spray paint booth. VOCs were not detected above the laboratory method detection limit in the other wells installed as a function of the assessment.

At MW-2 and MW-10 cis-1,2-Dichloroethene was detected at a concentration of 34 parts per billion (ppb) at and 12 ppb respectively. The groundwater standard for cis-1,2-Dichloroethene is 5 ppb.

At MW-2 Trichloroethene was detected at a concentration of 13 ppb. The groundwater standard for trichloroethene is 5 ppb.

Of the eight RCRA metals, silver, arsenic, barium, chromium, mercury and lead were detected in the various groundwater samples. Two metals were detected above their respective standards; chromium was detected at 0.063 parts per million (ppm) and lead was detected at 0.201 ppm at MW-3 and lead was detected at a concentration of 0.031 ppm at MW-5. The groundwater standard for lead is 0.025 ppm and the groundwater standard for chromium is 0.050 ppm.

Following the completion of the Phase II ESA the report was submitted to the New York State Department of Environmental Conservation (NYSDEC) for their review and comment as the source of the VOCs detected in MW-2 and MW-10 was not clear. NYSDEC was not able to confirm or refute the potential for the VOC contamination to have originated from the adjacent hazardous waste facility. NYSDEC did indicate that SVOCs were detected in surface soils on the subject site during previous investigations of the adjoining hazardous waste facility.

2.0 METHOD OF INVESTIGATION

2.1 File Review

To further define the scope of work to be completed for this supplemental Phase II ESA, a file review of available relevant NYSDEC documentation regarding the adjacent Poultney Street Inactive Hazardous Waste Site (IHWF) was conducted. The file review focused on the sampling and analysis conducted within the bounds of the IHWF site as well as to better understand the geology of the site area.

2.2 Groundwater Elevation Survey

Groundwater elevation surveys were also conducted on the site to evaluate the groundwater flow pattern across the site. The elevation surveys were completed on April 5, 2007 utilizing the existing monitoring wells and on May 17, 2007 utilizing the monitoring wells installed as a function of this supplemental investigation. Water level measurements were collected from the on-site monitoring wells. The water level depths were converted to groundwater elevations using an assumed benchmark elevation of 100.00.

The Groundwater Contour Maps are included in Appendix A as Figures 3 and 4.

2.3 Surface Soil Sampling Locations

Five (5) surface soil samples were collected from the area surrounding the power house on the southwestern portion of the site, two (2) south of the power house (SS-4 and SS-5), and one (1) each north (SS-1), east (SS-3) and west (SS-2) of the power house. The samples were collected from the 0-2 inch depth range. Samples were analyzed for SVOCs by EPA Method 8270 (B/N).

The laboratory analysis results for surface soil samples are presented in Appendix D.

2.4 Test Boring and Monitoring Well Locations

On the basis of the file review and groundwater elevation survey, ten (10) additional monitoring wells were installed within the site. The test boring locations were selected to provide further assessment of the site's soil and groundwater conditions and to aid in determining if the source of the VOC contamination identified during the Phase II ESA of the site was related to the adjoining hazardous waste facility. The test borings were located as follows:

- Boring MW-1A was installed northeast of MW-2.
- MW-2A was installed in close proximity to MW-2.
- MW-3A was installed to the northwest of MW-10.
- MW-4A was installed in close proximity to MW-10.
- MW-5A was installed to the east of MW-10.
- MW-6A was installed to the south of MW-10.
- MW-7A was installed to the southeast of MW-10.
- MW-8A was installed within the southwestern portion of the site between the adjoining hazardous waste facility and the former power house.
- MW-9A was installed to the north of URS-MW4 (a monitoring well installed within the site for the purpose of evaluating the adjoining hazardous waste facility) and south of MW-10.

- MW-10A was completed to the northwest of MW-2.

The approximate test boring and monitoring well locations are depicted on the Sampling Location Plan which is included as Figure 2 in Appendix A.

2.5 Drilling Method and Well Construction

The drilling activities were completed on Wednesday, May 16, 2007 and Thursday, May 17, 2007 by SJB Services, Inc. of Ballston Spa, New York. For the purpose of this investigation, Geoprobe drilling techniques were utilized.

At each test location a two-inch diameter MacroCore sampler was advanced at continuous four foot intervals to the termination depths of the borings. The soil sample descriptions for each boring are presented on individual Subsurface Exploration Logs in Appendix B.

Upon completion of sampling, the ten borings were converted to groundwater monitoring wells for the purpose of facilitating the collection of groundwater samples for laboratory analysis.

On Thursday, May 31, 2007 the monitoring wells were developed to restore hydraulic connection with the surrounding formation. Each well was developed by purging a minimum of three to five well volumes of water.

The groundwater samples were collected in new laboratory supplied glass containers while wearing new gloves on Thursday, May 31, 2007. The samples were submitted for laboratory analysis for VOCs by EPA Method 8260. MW-4A, MW-6A, MW-7A, MW-8A and MW-9A were also submitted for laboratory analysis for SVOCs base/neutrals (B/N) by EPA Method 8270. The samples were placed in a cooler with ice and transported to Phoenix Environmental Laboratories, Inc. of Manchester, Connecticut following proper chain of custody protocols.

The laboratory analysis results for groundwater are presented in Appendix E.

2.6 Soil Screening and Sampling

Following the recovery of the soil samples from the test borings, each sample was screened for the presence of detectable volatile organic compounds with a MiniRAE

2000 photo-ionization detector (PID) equipped with a 10.6 eV lamp. The PID meter was calibrated according to manufacturer recommendations prior to use. The PID soil screening results are presented on the Organic Vapor Headspace Analysis Logs in Appendix C.

2.7 Decontamination

To preclude the potential for cross contamination between boring locations, drilling tools and sampling equipment that would contact the site soils were decontaminated prior to the start of the drilling activities and between test boring locations utilizing a detergent/water wash and tap water rinse. All soil samples were handled with a new pair of gloves to deter cross contamination of the soil samples collected for soil screening.

3.0 FINDINGS

3.1 Surface Soils

The surface soil samples were collected just below the vegetative layer and consisted of fill materials comprised of brown sand, brick, silt, gravel and rootlets. No petroleum/chemical type odors were noted within the recovered surface soil samples.

3.2 Subsurface Conditions - Boring Locations

The subsurface conditions encountered at the test boring locations were generally similar in terms of the soil units encountered. The depths at which the different soil units were encountered and the overall thickness of each unit varied at each boring location. The soils encountered at each boring are further described in the following paragraphs.

At MW-1A, the soils were consistent with fill materials being comprised of fine sand and gravel with trace silt to a depth of approximately two feet below grade. These soils were underlain by brown/gray clay and silt to a depth of approximately 4 feet below grade surface. Brown fine sand and gravel with trace silt was observed from 4 to 6 feet below grade and brown/gray clay and silt was observed to approximately 9 feet below grade. Gray fine sand and silt was observed from 9 to 14 feet below grade

and gray fine to coarse sand with little silt graded to gray clay to approximately 16 feet below grade. There was no recovery in the sampler from the 16 to 20 foot interval, the termination depth of the boring.

At MW-2A the soils were comprised of fill materials including brown/black sand and gravel with slag. These fill materials were underlain by coarse gravel with some silt to a depth of approximately 5 feet below grade. From 5 to 8 feet below grade the soils consisted of brown/gray silt followed by coarse gravel with some silt to 9 feet below grade. Brown/gray silt was encountered to approximately 13 feet below grade with a coarse gravel seam at approximately 11 feet below grade. Fine to coarse gray sand with some silt was encountered from 13 to 15 feet below grade followed by approximate one foot intervals of gray clay, brown/gray silt and gray sand respectively. From 18 to 20 feet below grade gray clay was encountered. The boring was terminated at 20 feet below grade surface.

At MW-3A the soils beneath the concrete slab consisted of brown silt with little sand. These soils graded to gray silt and clay with little sand to gray/brown silt to a depth of approximately 7 feet below grade. From 7 to 9 feet below grade the soils consisted of gray/brown silt with some sand and from 9 to 16 feet below grade the soils consisted of gray/brown fine to coarse sand with trace silt. Gray sand and silt were encountered from 16 to 18 feet below grade and from 18 to 24 feet below grade gray/brown fine to coarse sand and trace silt was encountered. From 24 to 26 feet below grade gray clay was encountered which was underlain by gray fine to coarse sand with trace silt to the termination depth of the boring at 28 feet below grade.

Brown gray silt was encountered at MW-4 beneath the concrete slab. These soils were underlain by gray silt followed by gray sand to eight feet below grade. Brown Gray silt with some sand followed by brown fine to coarse sand with trace silt was encountered to 15 feet below grade. These soils were underlain by an approximate one foot layer of gray clay. Brown coarse sand with trace silt followed by gray clay was encountered to the termination of the boring at 20 feet below grade surface.

Fill, consisting of black brown coarse sand, gravel and cinders, was encountered beneath the vegetative layer at MW-5 to a depth of approximately 2 feet below grade surface. Brown silt followed by brown silt with trace sand was encountered to approximately 9 feet below grade. These soils were underlain by brown/gray silt

and sand to approximately 13 feet below grade. Sand and gravel with trace silt was encountered from 13 to 18 feet below grade and clay was encountered from 18 to 20 feet below grade surface, the termination depth of the boring.

Fill materials consisting of brown/black sand, gravel and cinders with trace brick were encountered beneath the vegetative layer at MW-6A. These soils were underlain by brown/gray silt and sand to approximately 6 feet below grade. From 6 to 14 feet below grade the soils consisted of brown sand with traces of silt. Approximate two foot intervals of gray sand with trace silt, brown sand with trace brick and silt and gray sand with trace silt were encountered from 14 to 19 feet below grade. Gray clay was encountered beneath these soils to the termination of the boring at 20 feet below grade surface.

At MW-7A fill materials consisting of brown/black fine to coarse sand, gravel and cinders with some brick were encountered in the upper two feet of the boring beneath the vegetated surface. The fill materials were underlain by gray silt and clay which graded to brown/gray silt and clay with some sand. Brown/gray sand and silt were encountered from 8 to 12 feet below grade and brown sand with traces of silt were encountered from 12 to 15 feet below grade. These soils were underlain by gray clay followed by brown sand with trace silt to the termination depth of the boring at 20 feet below grade.

At MW-8A, fill materials consisting of brown/black sand and gravel were encountered to a depth of approximately one foot below grade. The fill materials were underlain by brown/gray silt with some sand. From approximately 7 to 15 feet below grade the soils consisted of brown sand with traces of silt. A one foot layer of gray clay was encountered beneath these soils and the clay was underlain by brown sand with trace silt to approximately 18 feet below grade. These soils were underlain by gray clay to the termination of the boring at 20 feet below grade.

At MW-9A fill materials consisting of brown/black sand and gravel with traces of cinders and silt were encountered in the upper two feet of the boring beneath the vegetated surface. The fill materials were underlain by gray silt and clay which graded to brown/gray sand with some silt to approximately 7 feet below grade. From 7 to 9 feet below grade brown/gray silt was encountered and from 9 to 15 feet brown coarse sand with some silt was encountered. These soils were underlain by

gray coarse sand with trace silt which turned into brown coarse sand with trace silt. Gray clay was encountered at the termination of the boring at 20 feet below grade.

At MW-10A brown/gray silt with little sand was encountered beneath the vegetated surface. These soils were underlain by brown/gray silt and sand followed by brown coarse sand with trace silt to approximately 11 feet below grade surface. From 11 feet below grade surface to the termination depth of the boring at 20 feet below grade, layers of brown sand and gray clay were encountered.

The soil classifications are provided on the individual Subsurface Exploration Logs in Appendix B.

As reported in the November 2002 RI Report for the Poultney Street Sites, the clay unit encountered at a depth of approximately 20 feet below grade at the soil borings completed for the RI is a basal clay unit that forms the bottom of the shallow aquifer identified above the clay unit. As presented above, nine (9) of the ten (10) borings completed for this supplemental investigation encountered a clay unit at approximately 20 feet below grade. At boring MW-3A, sand and gravel was present at 18 to 24 feet, clay from 24 to 26, followed by a sand layer from 26 to 28 feet.

No petroleum/chemical type odors were noted within the recovered soil samples, although a few of the recovered soil samples from 5 of the 10 boring locations exhibited PID VOC readings above ambient background levels.

3.3 Soil Screening Results

Screening of the soils at the test boring locations did not reveal elevated PID readings that would be representative of volatile organic compound vapors at MW-1A, MW-3A, MW-6, MW-8 and MW-9. Elevated PID readings for MW-2A, MW-4A, MW-5A, MW-7A and MW-10A are presented in the table below.

TABLE 4.1-1
SUMMARY OF SOIL SCREENING RESULTS
OLD CHAMPLAIN MILL SITE

Boring Location	Interval (Depth in Feet)	Background Reading (ppm)	Sample Reading (ppm)
MW-2A	12-14	1.4	10.2
MW-2A	14-16	1.4	11.5

Boring Location	Interval (Depth in Feet)	Background Reading (ppm)	Sample Reading (ppm)
MW-4A	12-14	0.8	25.7
MW-4A	14-16	0.8	15.1
MW-5A	16-18	1.2	32.2
MW-5A	18-20	1.2	25.1
MW-7A	14-16	1.1	11.5
MW-10A	10-12	1.5	16.9

Although these slightly elevated readings were noted, staining or odors were not evident in these soil samples. Staining and odors of the soils at the other test boring locations was not evident during the screening activities.

3.4 Groundwater Conditions

During sampling activities, groundwater was encountered at shallow depths generally less than three feet below grade at each of the monitoring well locations. The groundwater within the borings did not exhibit odors or sheens at MW-1A, MW-2A, MW-5A, MW-6A, MW-8A or MW-10. At MW-3A, MW-4A, MW-7A and MW-9A an organic (non-petroleum) type sheen was observed.

The direction of groundwater flow was determined on the basis of the water levels within the monitoring wells. Water levels were collected from both the original eleven (11) monitoring wells installed in November 2006, and ten (10) new monitoring wells installed for this supplemental investigation. Since the original monitoring wells installed in 2006 were constructed at depths of approximately 10 to 12 feet and the supplemental wells were installed at depth of approximately 20 feet, individual groundwater contour maps (Figures 3 and 4) were prepared for each set of monitoring wells. Overall, groundwater flow for each set of monitoring wells was determined to be generally from the south to the north with a southeast to northwest trend on the western portion of the site and a southwest to northeast trend on the eastern portion of the site.

4.0 ANALYTICAL RESULTS

4.1 Surface Soil Samples

Five (5) surface soil samples were analyzed for SVOCs by EPA Method 8270. The following table summarizes the laboratory analysis results:

TABLE 4.1-1
SUMMARY OF SURFACE SOIL SAMPLING RESULTS
AND GUIDANCE VALUES
OLD CHAMPLAIN MILL SITE

PARAMETER	SAMPLE LOCATION AND CONCENTRATION					NYSDEC TAGM 4046 RECOMMENDED SOIL CLEANUP OBJECTIVE VALUE (2)
	SS-1 ug/Kg	SS-2 ug/Kg	SS-3 ug/Kg	SS-4 ug/Kg	SS-5 ug/Kg	ug/Kg
SEMI VOLATILE ORGANIC COMPOUNDS						
2-Methylnaphthalene	1,400	ND	ND	750	1,000	36,400
Acenaphthene	4,600	ND	ND	ND	ND	50,000
Anthracene	10,000	ND	ND	ND	ND	50,000
Benz(a)anthracene	**20,000**	**610**	**1,900**	**830**	**1,300**	224
Benzo(a)pyrene	**16,000**	**840**	**2,000**	**820**	**1,200**	61
Benzo(b)fluoranthene	**19,000**	**1,000**	**2,400**	**1,100**	**1,600**	224
Benzo(ghi)perylene	9,900	560	1,200	570	730	50,000
Benzo(k)fluoranthene	**9,800**	ND	**960**	**440**	**670**	224
Chrysene	**18,000**	**600**	**1,900**	**840**	**1,200**	400
Dibenz(a,h)anthracene	**2,500**	ND	ND	ND	ND	14
Fluoranthene	46,000	1,100	2,900	1,400	2,000	50,000
Fluorene	5,200	ND	ND	ND	ND	50,000
Indeno(1,2,3-cd)pyrene	9,400	540	1,200	530	680	3,200
Naphthalene	6,000	ND	ND	610	800	13,000
Phenanthrene	38,000	950	1,500	1,200	1,800	50,000
Pyrene	35,000	890	2,400	1,200	1,700	50,000

ug/Kg=Parts Per Billion
ND=Below Method Detection Limit
Values which exceed their respective groundwater standard are depicted in bold type.
*This is a Guidance Value
(1) Only the compounds that were detected are listed.
(2) Technical and Administrative Guidance Memorandum #4046, Determination of Soil Cleanup Objectives and Cleanup Levels, New York State Department of Environmental Conservation, January 24, 1994 and Addendum, December 20, 2000

As noted in the table, the five (5) surface soil samples exceeded the recommended soil cleanup objective values for benz(a)anthracene, benzo(a)pyrene, benzo(b)fluoranthene and chrysene. The recommended soil cleanup objective value was exceeded in soil samples SS-1, SS-3, SS-4 and SS-5 for Benzo(k)fluoranthene. The recommended soil cleanup objective value for Dibenz(a,h)anthracene was exceed at SS-1. The highest concentrations were generally noted in SS-1, located to the north of the power house.

4.2 Groundwater Within Monitoring Wells

The groundwater samples collected from each of the monitoring wells installed as a function of this investigation were analyzed for VOCs by EPA Method 8260. Table 4.2-1 summarizes the laboratory analysis results. Only those compounds detected above the laboratory method detection limit at one or more well locations are presented. Also shown are the laboratory results for MW-2 and MW-10 sampled as a function of the previous Phase II ESA in 2006. Total VOC concentrations are also shown within the table.

Figure 5 presents the distribution of total VOC detected in groundwater in the monitoring wells installed in 2006, and Figure 6 present the distribution of VOCs in groundwater within the deeper monitoring wells installed for this supplemental investigation.

TABLE 4.2-1
SUMMARY OF GROUNDWATER SAMPLING RESULTS
AND REGULATORY STANDARDS
OLD CHAMPLAIN MILL SITE

PARAMETER	SAMPLE LOCATION AND CONCENTRATION												6NYCRR PART 703.5 GROUNDWATER STANDARD (2)
	MW-1A ug/l	MW-2 ug/l	MW-2A ug/l	MW-3A ug/l	MW-4A ug/l	MW-5A ug/l	MW-6A ug/l	MW-7A ug/l	MW-8A ug/l	SW-9A ug/l	MW-10 ug/l	MW-10A ug/l	ug/l
VOLATILE ORGANIC COMPOUNDS													
1,1 Dichlroethene	ND	ND	**8.4**	ND	ND	ND	ND	ND	ND	ND	ND	ND	0.7*
Cis-1,2-dichloroethene	**160**	**34**	**7500**	**15**	**13**	**530**	**160**	**17**	**12**	ND	**12**	**1300**	5
Methylene chloride	**9.7**	ND	**9.3**	ND	ND	**10**	**11**	**11**	**11**	**10**	ND	**9.2**	5
Naphthalene	ND	ND	ND	ND	ND	ND	ND	**42**	ND	ND	ND	ND	10
Trans-1,2-Dicholoroethene	ND	ND	**47**	ND	ND	**14**	ND	ND	ND	ND	ND	**8.9**	5
Trichloroethene	ND	**13**	**3300**	ND	ND	**88**	**140**	**7.2**	ND	ND	ND	**10**	5
Vinyl chloride	**87**	ND	**210**	ND	ND	**160**	**9.4**	ND	ND	ND	ND	**440**	2
Total VOCs	256.7	47	11,074.7	15	13	802	320.4	77.2	23	10	12	1768.1	

ug/l=Parts Per Billion
ND=Below Method Detection Limit
Values which exceed their respective groundwater standard are depicted in bold type.
*This is a Guidance Value
(1) Only the compounds that were detected are listed.
(2) TOGS 1.1.1, Ambient Water Quality Standards and Guidance Values and Groundwater Effluent Limitations, New York State Department of Environmental Conservation, June 1998 and Addendum, April 2000.

As noted in the table, seven VOCs were detected in the groundwater samples from the various monitoring wells. In each case, the VOCs detected were present at concentrations above the groundwater standard or guidance value.

Of the VOCs detected, excluding naphthalene, each are classified as chlorinated hydrocarbons that are commonly associated with degreasing solvent. The detected VOCs are not representative of a petroleum grade fuel release.

SVOCs were not detected above the laboratory method detection limit in the groundwater samples from MW-4A, MW-6A, MW-7A, MW-8A and MW-9A, except for naphthalene at MW-7A.

A copy of the laboratory analysis report is presented in Appendix E.

5.0 DISCUSSION OF FINDINGS

Supplemental Phase II activities were performed to determine the quality of soil and groundwater at the site with respect to the recognized environmental conditions identified through the ESA activities including the former use of the site for industrial purposes and to further define the extent of VOC contamination identified during the initial Phase II ESA. The supplemental Phase II ESA activities were developed in part on the basis of a file review of the adjacent hazardous waste facility and a groundwater elevation survey to determine the direction of groundwater flow across the site.

The Supplemental Phase II activities included a subsurface investigation which included the advancement of ten soil borings which were converted to groundwater monitoring wells, the collection of soil samples for field vapor screening and the collection and analysis of surface soil samples and groundwater samples for laboratory analysis.

Site geology, in terms of the overburden soils is relatively complex. Beneath the relative thin layer of fill materials mantling the site, the native soils are characteristic of fluvial sediments (sands, silts and clays) deposited within the flood plain of a stream or river. Within the depths explored, the soil straitigraphy is generally characterized as interlayered deposits of fine sand with little silt, silt and clay, coarse sand with little silt, and clay. The top of bedrock was not encountered within the depths explored and is reported in the RI Report for the Poultney Street Site to be present at approximately 50 to 100 feet below existing grades. Nine (9) of the ten (10) borings were terminated within the top of a clay unit; however the overall thickness of the clay unit was not defined within the depths explored. At MW-3A a sand layer was encountered at 18 to 24 feet with a clay layer at a depth of 24 to 26 feet followed by a layer of sand of undefined thickness. According to the RI Report, the clay layer present at depths of approximately 20 feet is a basal clay unit that forms the bottom of the shallow overburden aquifer of the site. According to DEC Region 5 representatives, several deep geotechnical test borings were completed within the Poultney Street IHWS site which documented the basal clay unit to extend from approximately 20 to 50 feet below existing grades.

Elevated PID readings were noted in eight soil samples at five boring locations, generally within the soil samples recovered from 12 feet and deeper, mainly within sand layers. Petroleum or chemical odors or staining were not, however, noted in these samples. The source area (where the solvents may have escaped into the environment) has not been identified. It is expected that if the source was a release to the near surface soils, there would be evidence of soil impacts at depths shallower than 12 feet below grade.

The groundwater samples collected from each of the monitoring wells installed as a function of the investigation were analyzed for VOCs by EPA Method 8260, MW-4A, MW-6A, MW-7A, MW-8A and MW-9A were also analyzed for SVOCs by EPA Method 8270 (B/N).

Several SVOCs were detected above their respective soil cleanup guidance values in the surface soil samples collected in the vicinity of the old boiler house. These detections are possibly related to traces of coal, ash and cinders within the surface soils. SVOCs were not detected above the laboratory method detection limit in the groundwater samples from MW-4A, MW-6A, MW-7A, MW-8A and MW-9A. The five (5) surface soil samples exceeded the recommended soil cleanup objective values for benz(a)anthracene, benzo(a)pyrene, benzo(b)fluoranthene and chrysene. The recommended soil cleanup objective value was exceeded in soil samples SS-1, SS-3, SS-4 and SS-5 for benzo(k)fluoranthene. The recommended soil cleanup objective value for dibenz(a,h)anthracene was exceed at SS-1. The highest concentrations were generally noted in SS-1, located to the north of the power house.

Seven (7) VOCs were detected in the groundwater samples from the various monitoring wells. In each case, the VOCs were detected above the respective groundwater standard or guidance value. The VOCs detected are each related to chlorinated solvents; common petroleum grade fuel compounds were not detected in the samples. Chlorinated solvent compounds are most often denser than water and therefore have a tendency to sink within the aquifer until some form of hydraulic barrier (clay layer) is encountered. At this stage, the compounds may stabilize, accumulate and increase in concentration, or continue to migrate and disperse on top of the barrier.

Dense Non Aqueous Phase Liquid (DNAPL) was not identified in any of the well locations. Based on the relatively low levels of compound detections in the groundwater, NAPL is not expected.

The dichloroethenes and vinyl chloride are degradation by products of trichloroethene. The relative concentrations of the dichloroethenes and vinyl chloride as compared to concentration of trichloroethene indicate the solvent source has naturally degraded to some extent.

Overall, groundwater was determined to be generally from the south to the north with a southeast to northwest trend on the western portion of the site and a southwest to northeast trend on the eastern portion of the site. The extent of groundwater impacts by the chlorinated compounds, both vertically and horizontally, have not been defined within monitoring well array installed to date.

Based on the work completed to date, the data does not suggest that the groundwater impacts within the subject site are related to those at the Poultney Street Site as the monitoring wells located between the two areas of contamination do not exhibit groundwater impacts of the magnitude that could positively link the two areas.

If site remediation is required relative to soil and/or groundwater impacts by the chlorinated compounds identified herein, further investigation of the site will be necessary to define the horizontal and vertical extent of the contamination. At least three (3) additional up-gradient and three (3) down-gradient borings/monitoring wells would be required to more accurately define the horizontal extent of the contamination. Several shallow soil borings would be necessary to evaluate soils closer to ground surface relative to identifying possible solvent source areas.

APPENDIX A

Figures/Maps

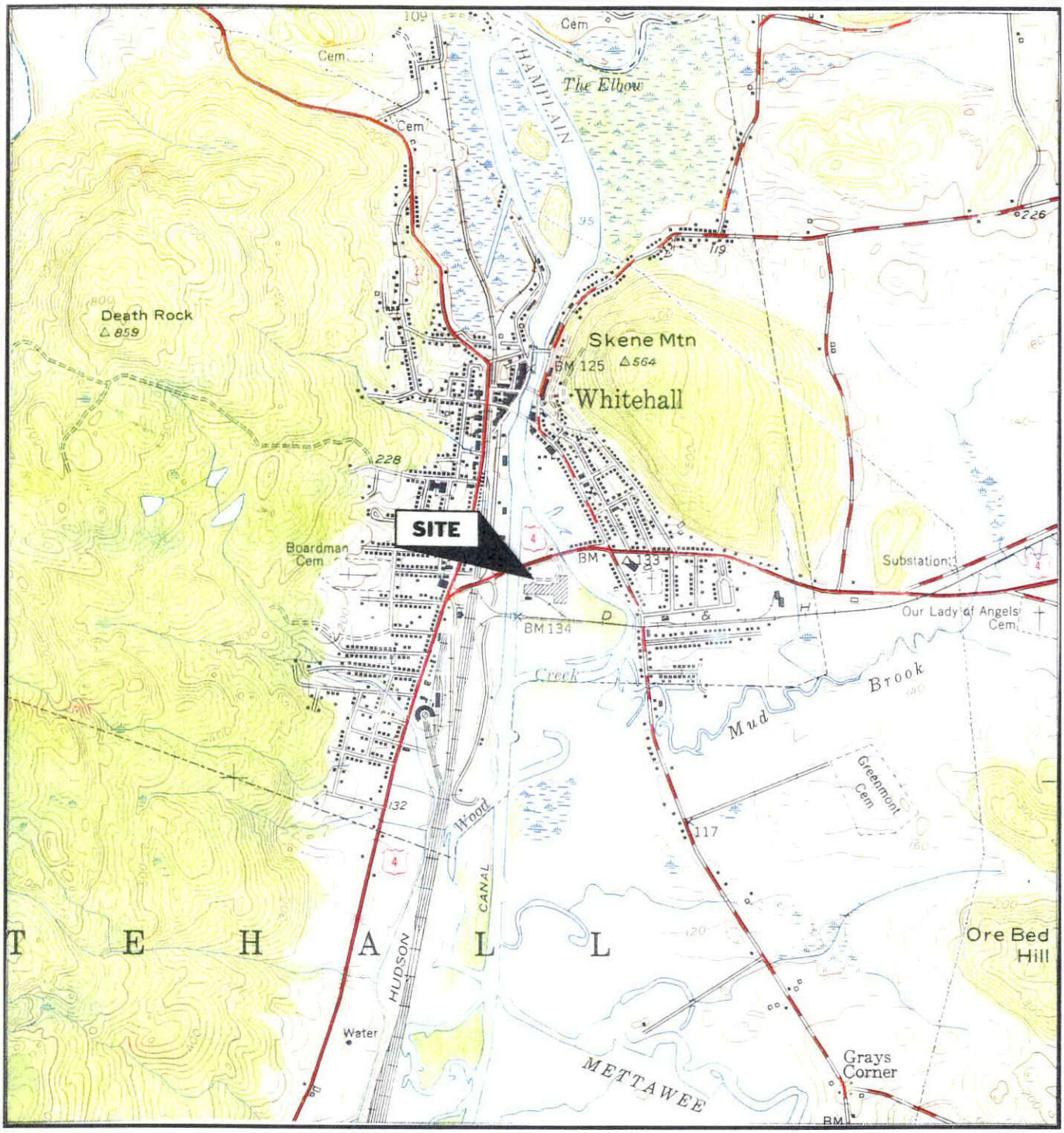

MAP REFERENCE
United States Geological Survey
7.5 Minute Series Topographic Map
Quadrangle: Whitehall, NY
Date: 1950

N
W
E

ENGINEERING
ENVIRONMENTAL SERVICES
SURVEYING
PHONE (518)786-7400
FAX (518) 786-7299

C.T.MALE ASSOCIATES, P.C.
50 CENTURY HILL DRIVE, PO BOX 727, LATHAM, NY 12110

FIGURE 1 SITE LOCATION MAP

OLD CHAMPLAIN MILL

VILLAGE OF WHITEHALL	WASHINGTON COUNTY, NY
SCALE: 1:24,000	
DRAFTER: ASG	
PROJECT No.	

Figure 2

Sampling Location Plan

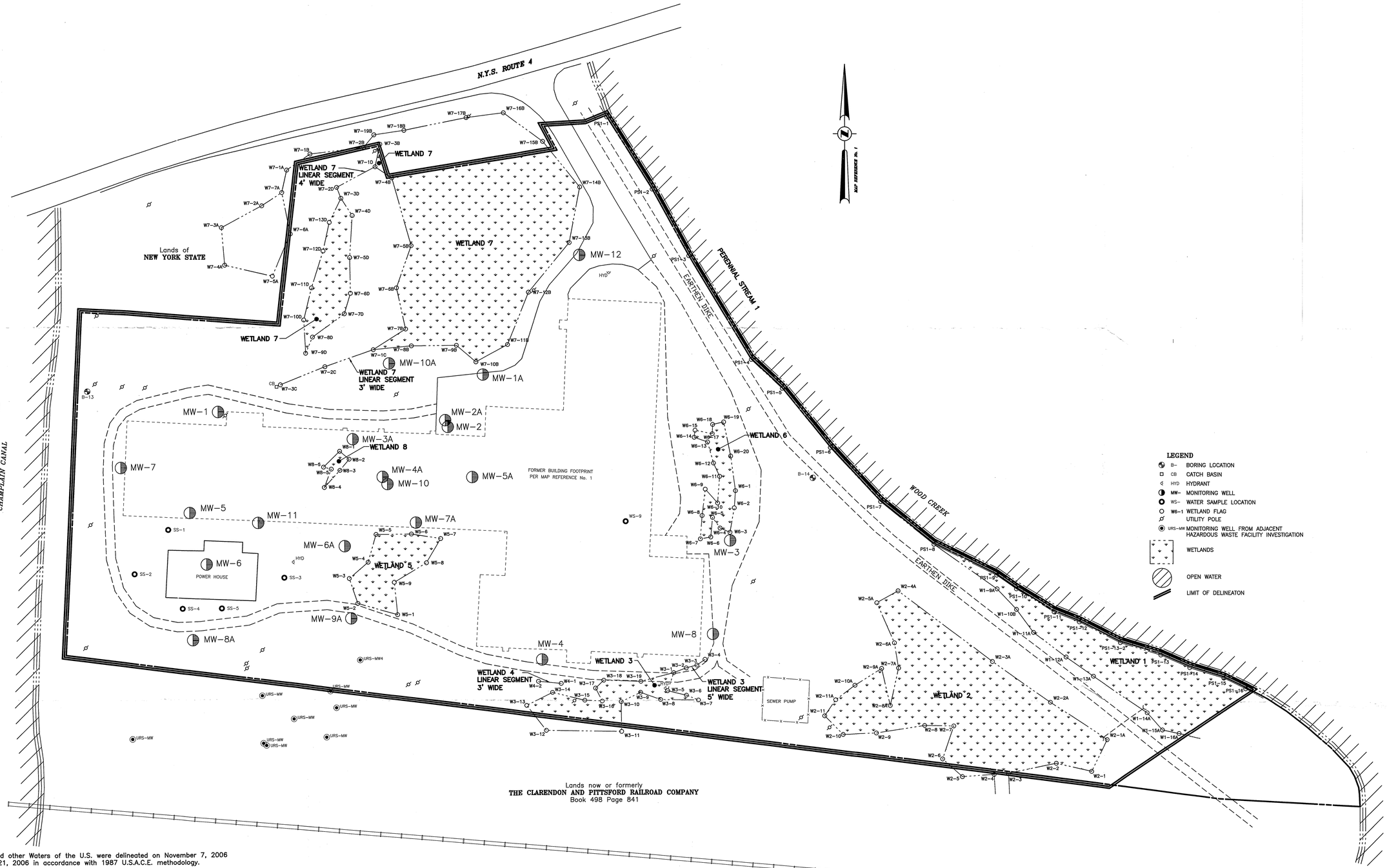

LEGEND

- B- BORING LOCATION
- CB CATCH BASIN
- HYD HYDRANT
- MW- MONITORING WELL
- WS- WATER SAMPLE LOCATION
- W6-1 WETLAND FLAG
- UTILITY POLE
- URS-MW MONITORING WELL FROM ADJACENT HAZARDOUS WASTE FACILITY INVESTIGATION
- WETLANDS
- OPEN WATER
- LIMIT OF DELINEATON

Map Notes

1. Wetlands and other Waters of the U.S. were delineated on November 7, 2006 and November 21, 2006 in accordance with 1987 U.S.A.C.E. methodology.

2. Waters of the U.S. flagging were located with a Trimble ProxR Pathfinder, anticipated level of accuracy for each position is 50cm±PPM as specified by Trimble Navigation LTD., or 4± feet.

3. Waters of the United States acreage has been calculated within the limits of the delineation.

4. This survey does not represent a boundary survey, boundary lines and planimetric features shown are approximate per Map Reference No. 1.

Map References

1. "Map of a 6 Lot Subdivision made for Old Champlain Mill Inc. Village of Whitehall. County of Washington, State of New York" prepared by David J. Bolster dated May 13, 2002, DWG. NO. 02-056.

BAR SCALE
50 0 25 50 100
1 inch = 50 ft.

DATE		REVISIONS RECORD/DESCRIPTION	DRAFTER	CHECK	APPR.
	1				
	2				
	3				
	4				
	5				
	6				
	7				
	8				
	9				

UNAUTHORIZED ALTERATION OR ADDITION TO THIS DOCUMENT IS A VIOLATION OF SECTION 7209 SUBDIVISION 2 OF THE NEW YORK STATE EDUCATION LAW.

© 2006 C.T. MALE ASSOCIATES, P.C.

APPROVED:
DRAFTED : SMW
CHECKED : DGD
PROJ. NO: 06.6448
SCALE : 1"=50'
DATE : JUNE 21, 2007

FIGURE 2
SAMPLING LOCATION PLAN
SUPPLIMENTAL PHASE II ENVIRONMENTAL SITE ASSESSMENT
OLD CHAMPLAIN MILL SITE

VILLAGE OF WHITEHALL — WASHINGTON COUNTY, NEW YORK

C.T. MALE ASSOCIATES, P.C.
50 CENTURY HILL DRIVE, P.O. BOX 727, LATHAM, NY 12110
518.786.7400 ■ FAX 518.786.7299
ARCHITECTURE & BUILDING SYSTEMS ENGINEERING ■ CIVIL ENGINEERING
ENVIRONMENTAL SERVICES ■ SURVEY & LAND INFORMATION SERVICES

SHEET 1 OF 1
DWG. NO: 07-XXX

"ONLY COPIES OF THIS MAP SIGNED IN RED INK AND EMBOSSED WITH THE SEAL OF AN OFFICER OF C.T. MALE ASSOCIATES, P.C. OR A DESIGNATED REPRESENTATIVE SHALL BE CONSIDERED TO BE A VALID TRUE COPY".

CAD DWG. FILE NAME:FIGURE 2 ADDITIONAL WELLS.DWG

CAD DWG. FILE NAME:FIGURE 2 ADDITIONAL WELL

Figure 3

Groundwater Contour Map
April 5, 2007

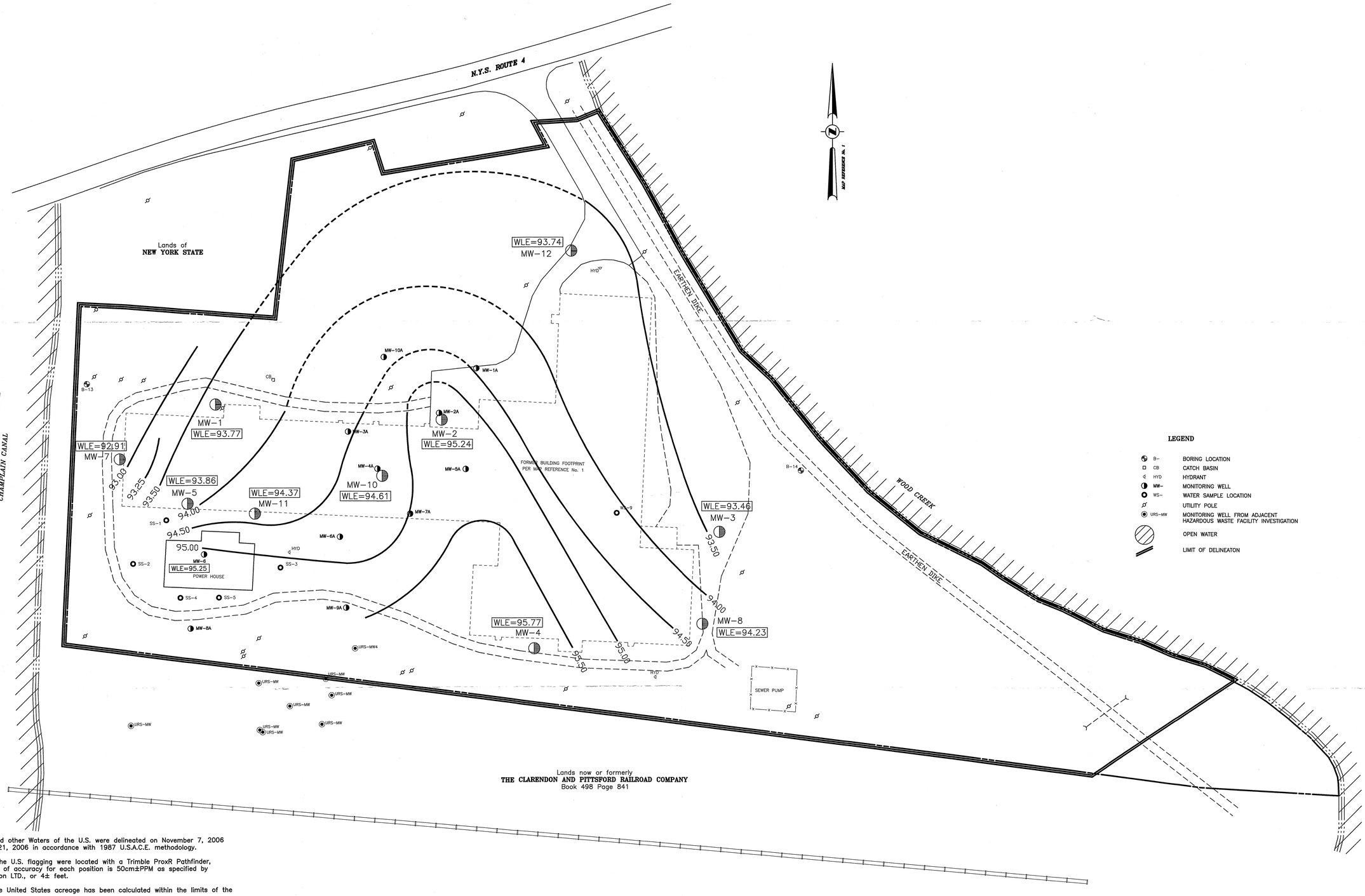

LEGEND

- B– BORING LOCATION
- CB CATCH BASIN
- HYD HYDRANT
- MW– MONITORING WELL
- WS– WATER SAMPLE LOCATION
- UTILITY POLE
- URS–MW MONITORING WELL FROM ADJACENT HAZARDOUS WASTE FACILITY INVESTIGATION
- OPEN WATER
- LIMIT OF DELINEATON

Map Notes

1. Wetlands and other Waters of the U.S. were delineated on November 7, 2006 and November 21, 2006 in accordance with 1987 U.S.A.C.E. methodology.

2. Waters of the U.S. flagging were located with a Trimble ProxR Pathfinder, anticipated level of accuracy for each position is 50cm±PPM as specified by Trimble Navigation LTD., or 4± feet.

3. Waters of the United States acreage has been calculated within the limits of the delineation.

4. This survey does not represent a boundary survey, boundary lines and planimetric features shown are approximate per Map Reference No. 1.

Map References

1. "Map of a 6 Lot Subdivision made for Old Champlain Mill Inc. Village of Whitehall. County of Washington, State of New York" prepared by David J. Bolster dated May 13, 2002, DWG. NO. 02–056.

BAR SCALE
50 0 25 50 100
1 inch = 50 ft.

"ONLY COPIES OF THIS MAP SIGNED IN RED INK AND EMBOSSED WITH THE SEAL OF AN OFFICER OF C.T. MALE ASSOCIATES, P.C. OR A DESIGNATED REPRESENTATIVE SHALL BE CONSIDERED TO BE A VALID TRUE COPY".

DATE	REVISIONS RECORD/DESCRIPTION	DRAFTER	CHECK	APPR.
	1			
	2			
	3			
	4			
	5			
	6			
	7			
	8			
	9			

UNAUTHORIZED ALTERATION OR ADDITION TO THIS DOCUMENT IS A VIOLATION OF SECTION 7209 SUBDIVISION 2 OF THE NEW YORK STATE EDUCATION LAW.

© 2006 C.T. MALE ASSOCIATES, P.C.

APPROVED:
DRAFTED : SMW
CHECKED : DGD
PROJ. NO: 06.6448
SCALE : 1"=50'
DATE : JUNE 21, 2007

FIGURE 3
GROUNDWATER CONTOUR MAP (APRIL 5, 2007)
SUPPLIMENTAL PHASE II ENVIRONMENTAL SITE ASSESSMENT
MW-1 TO MW-8 & MW-10 TO MW-12
OLD CHAMPLAIN MILL SITE

VILLAGE OF WHITEHALL — WASHINGTON COUNTY, NEW YORK

C.T. MALE ASSOCIATES, P.C.
50 CENTURY HILL DRIVE, P.O. BOX 727, LATHAM, NY 12110
518.786.7400 ■ FAX 518.786.7299
ARCHITECTURE & BUILDING SYSTEMS ENGINEERING ■ CIVIL ENGINEERING
ENVIRONMENTAL SERVICES ■ SURVEY & LAND INFORMATION SERVICES

SHEET 1 OF 1
DWG. NO: 07–XXX

CAD DWG. FILE NAME:FIGURE 3.DWG

CAD DWG. FILE NAME:FIGURE 3.DWG

Figure 4

Groundwater Contour Map
May 17, 2007

XREFS: NONE

PROJECT NUMBER:06.6448

CAD DWG. FILE NAME:FIGURE 4.DWG

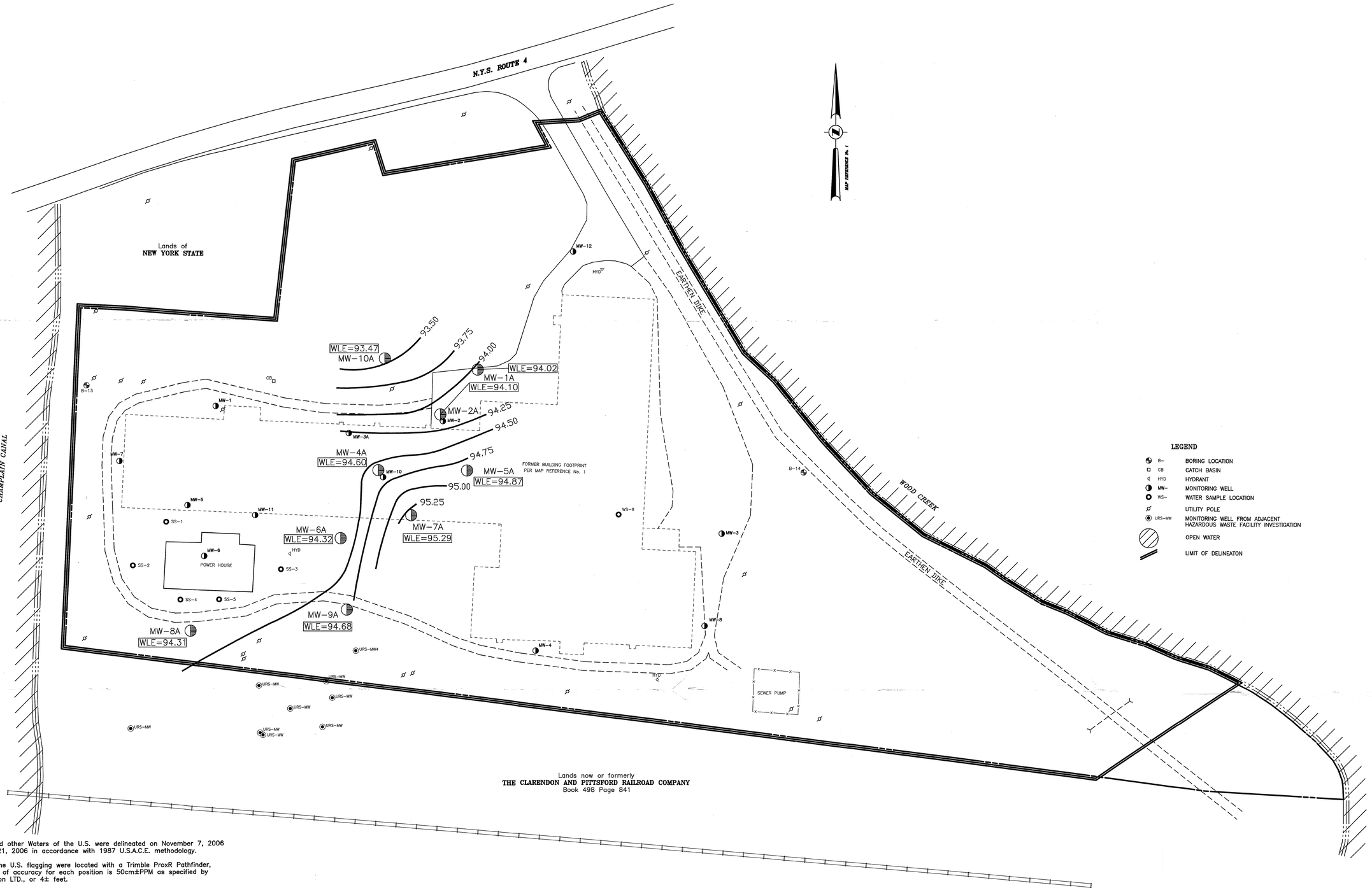

LEGEND

- B– BORING LOCATION
- CB CATCH BASIN
- HYD HYDRANT
- MW– MONITORING WELL
- WS– WATER SAMPLE LOCATION
- UTILITY POLE
- URS–MW MONITORING WELL FROM ADJACENT HAZARDOUS WASTE FACILITY INVESTIGATION
- OPEN WATER
- LIMIT OF DELINEATON

Map Notes

1. Wetlands and other Waters of the U.S. were delineated on November 7, 2006 and November 21, 2006 in accordance with 1987 U.S.A.C.E. methodology.

2. Waters of the U.S. flagging were located with a Trimble ProxR Pathfinder, anticipated level of accuracy for each position is 50cm±PPM as specified by Trimble Navigation LTD., or 4± feet.

3. Waters of the United States acreage has been calculated within the limits of the delineation.

4. This survey does not represent a boundary survey, boundary lines and planimetric features shown are approximate per Map Reference No. 1.

Map References

1. "Map of a 6 Lot Subdivision made for Old Champlain Mill Inc. Village of Whitehall. County of Washington, State of New York" prepared by David J. Bolster dated May 13, 2002, DWG. NO. 02–056.

BAR SCALE
50 0 25 50 100
1 inch = 50 ft.

"ONLY COPIES OF THIS MAP SIGNED IN RED INK AND EMBOSSED WITH THE SEAL OF AN OFFICER OF C.T. MALE ASSOCIATES, P.C. OR A DESIGNATED REPRESENTATIVE SHALL BE CONSIDERED TO BE A VALID TRUE COPY".

DATE	REVISIONS RECORD/DESCRIPTION	DRAFTER	CHECK	APPR.
	1			
	2			
	3			
	4			
	5			
	6			
	7			
	8			
	9			

UNAUTHORIZED ALTERATION OR ADDITION TO THIS DOCUMENT IS A VIOLATION OF SECTION 7209 SUBDIVISION 2 OF THE NEW YORK STATE EDUCATION LAW.

© 2006 C.T. MALE ASSOCIATES, P.C.

APPROVED:

DRAFTED : SMW

CHECKED : DGD

PROJ. NO: 06.6448

SCALE : 1"=50'

DATE : JUNE 21, 2007

FIGURE 4
GROUNDWATER CONTOUR MAP (MAY 17, 2007)
SUPPLIMENTAL PHASE II ENVIRONMENTAL SITE ASSESSMENT
MW-1A THRU MW-10A
OLD CHAMPLAIN MILL SITE

VILLAGE OF WHITEHALL — WASHINGTON COUNTY, NEW YORK

C.T. MALE ASSOCIATES, P.C.
50 CENTURY HILL DRIVE, P.O. BOX 727, LATHAM, NY 12110
518.786.7400 ■ FAX 518.786.7299
ARCHITECTURE & BUILDING SYSTEMS ENGINEERING ■ CIVIL ENGINEERING
ENVIRONMENTAL SERVICES ■ SURVEY & LAND INFORMATION SERVICES

SHEET 1 OF 1

DWG. NO: 07–XXX

CAD DWG. FILE NAME:FIGURE 4.DWG

Figure 5

Distribution of Total VOCs In Groundwater For Wells MW-1 through MW-12

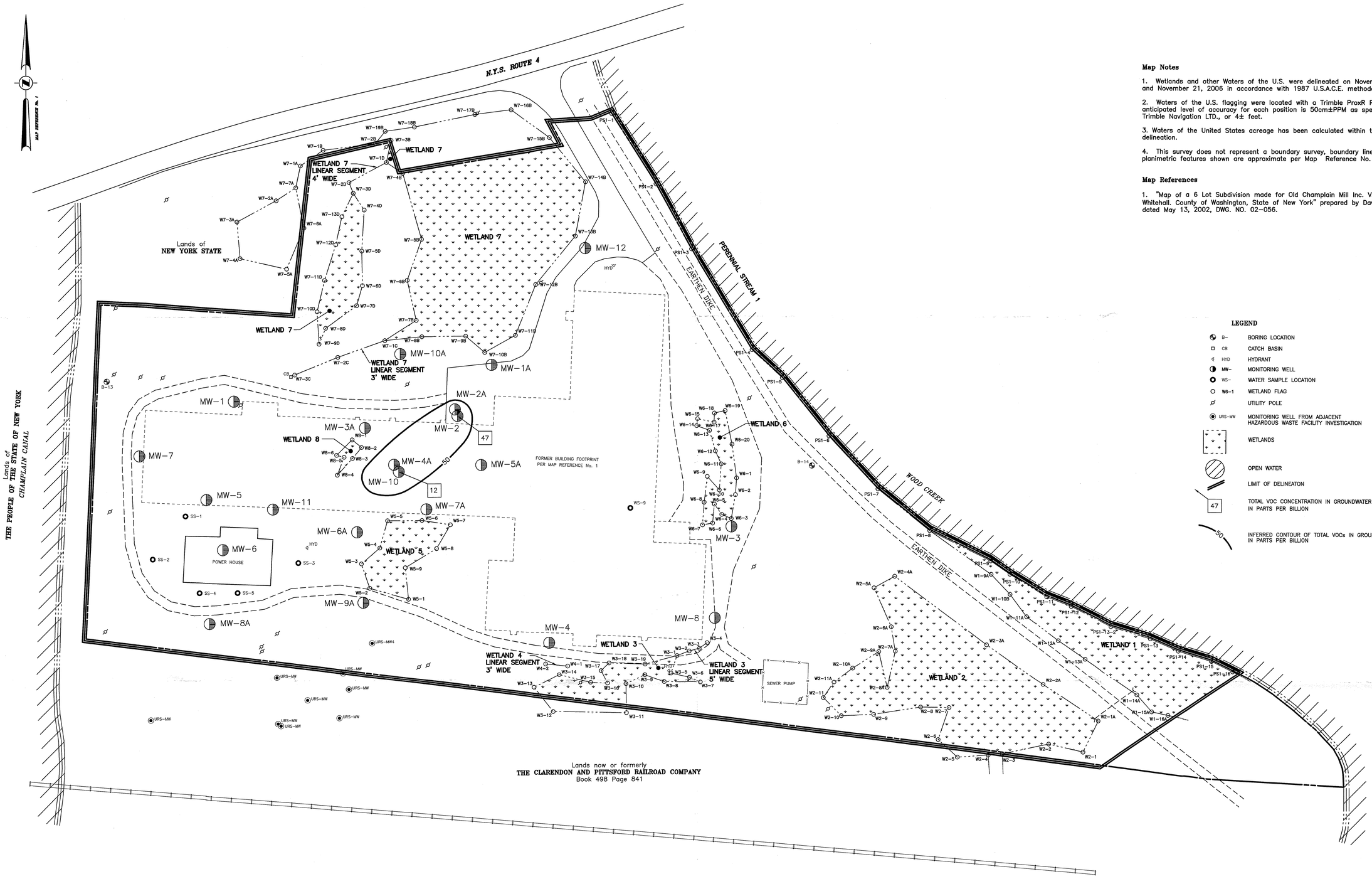

Map Notes

1. Wetlands and other Waters of the U.S. were delineated on November 7, 2006 and November 21, 2006 in accordance with 1987 U.S.A.C.E. methodology.

2. Waters of the U.S. flagging were located with a Trimble ProxR Pathfinder, anticipated level of accuracy for each position is 50cm±PPM as specified by Trimble Navigation LTD., or 4± feet.

3. Waters of the United States acreage has been calculated within the limits of the delineation.

4. This survey does not represent a boundary survey, boundary lines and planimetric features shown are approximate per Map Reference No. 1.

Map References

1. "Map of a 6 Lot Subdivision made for Old Champlain Mill Inc. Village of Whitehall. County of Washington, State of New York" prepared by David J. Bolster dated May 13, 2002, DWG. NO. 02-056.

LEGEND

- B- BORING LOCATION
- CB CATCH BASIN
- HYD HYDRANT
- MW- MONITORING WELL
- WS- WATER SAMPLE LOCATION
- W6-1 WETLAND FLAG
- UTILITY POLE
- URS-MW MONITORING WELL FROM ADJACENT HAZARDOUS WASTE FACILITY INVESTIGATION
- WETLANDS
- OPEN WATER
- LIMIT OF DELINEATON
- 47 TOTAL VOC CONCENTRATION IN GROUNDWATER IN PARTS PER BILLION
- 50 INFERRED CONTOUR OF TOTAL VOCs IN GROUNDWATER IN PARTS PER BILLION

BAR SCALE
50 0 25 50 100
1 inch = 50 ft.

DATE	REVISIONS RECORD/DESCRIPTION	DRAFTER	CHECK	APPR.
	1			
	2			
	3			
	4			
	5			
	6			
	7			
	8			
	9			

UNAUTHORIZED ALTERATION OR ADDITION TO THIS DOCUMENT IS A VIOLATION OF SECTION 7209 SUBDIVISION 2 OF THE NEW YORK STATE EDUCATION LAW.

© 2006 C.T. MALE ASSOCIATES, P.C.

APPROVED:
DRAFTED : SMW
CHECKED : DGD
PROJ. NO: 06.6448
SCALE : 1"=50'
DATE : JUNE 21, 2007

FIGURE 5
DISTRIBUTION OF TOTAL VOC's IN GROUNDWATER FOR WELLS MW-1 - MW-10
SUPPLEMENTAL PHASE II ENVIRONMENTAL SITE ASSESSMENT
OLD CHAMPLAIN MILL SITE

VILLAGE OF WHITEHALL — WASHINGTON COUNTY, NEW YORK

C.T. MALE ASSOCIATES, P.C.
50 CENTURY HILL DRIVE, P.O. BOX 727, LATHAM, NY 12110
518.786.7400 ■ FAX 518.786.7299
ARCHITECTURE & BUILDING SYSTEMS ENGINEERING ■ CIVIL ENGINEERING
ENVIRONMENTAL SERVICES ■ SURVEY & LAND INFORMATION SERVICES

SHEET 1 OF 1
DWG. NO: 07-XXX

"ONLY COPIES OF THIS MAP SIGNED IN RED INK AND EMBOSSED WITH THE SEAL OF AN OFFICER OF C.T. MALE ASSOCIATES, P.C. OR A DESIGNATED REPRESENTATIVE SHALL BE CONSIDERED TO BE A VALID TRUE COPY".

CAD DWG. FILE NAME:FIGURE 5.DWG

CAD DWG. FILE NAME:FIGURE 5.DWG

Figure 6

Distribution of Total VOCs In Groundwater For Wells MW-1A through MW-10A

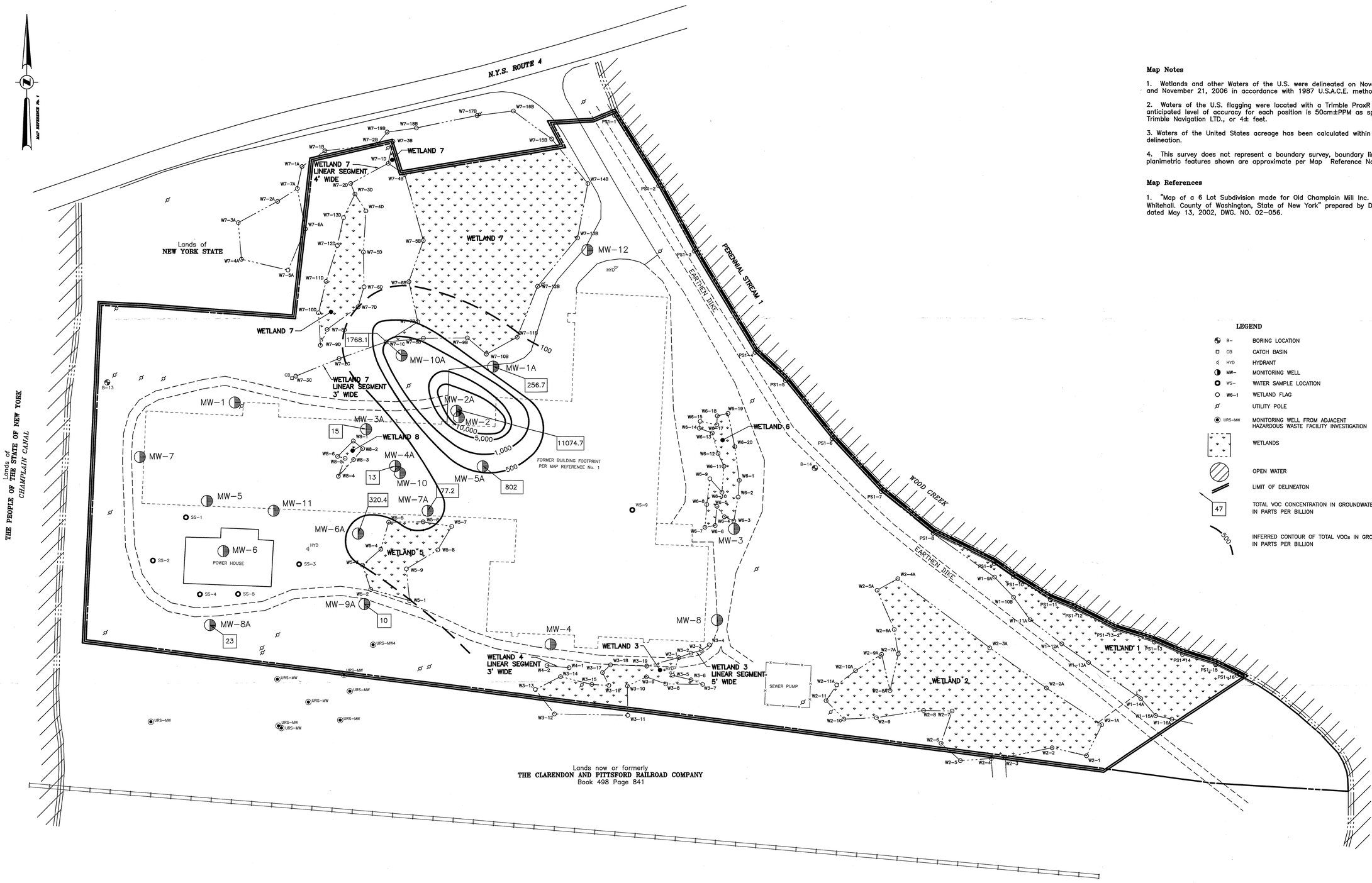

Map Notes

1. Wetlands and other Waters of the U.S. were delineated on November 7, 2006 and November 21, 2006 in accordance with 1987 U.S.A.C.E. methodology.

2. Waters of the U.S. flagging were located with a Trimble ProxR Pathfinder, anticipated level of accuracy for each position is 50cm±PPM as specified by Trimble Navigation LTD., or 4± feet.

3. Waters of the United States acreage has been calculated within the limits of the delineation.

4. This survey does not represent a boundary survey, boundary lines and planimetric features shown are approximate per Map Reference No. 1.

Map References

1. "Map of a 6 Lot Subdivision made for Old Champlain Mill Inc. Village of Whitehall. County of Washington, State of New York" prepared by David J. Bolster dated May 13, 2002, DWG. NO. 02–056.

LEGEND

- B– BORING LOCATION
- CB CATCH BASIN
- HYD HYDRANT
- MW– MONITORING WELL
- WS– WATER SAMPLE LOCATION
- W6–1 WETLAND FLAG
- UTILITY POLE
- URS–MW MONITORING WELL FROM ADJACENT HAZARDOUS WASTE FACILITY INVESTIGATION
- WETLANDS
- OPEN WATER
- LIMIT OF DELINEATON
- 47 TOTAL VOC CONCENTRATION IN GROUNDWATER IN PARTS PER BILLION
- 500 INFERRED CONTOUR OF TOTAL VOCs IN GROUNDWATER IN PARTS PER BILLION

BAR SCALE
50 0 25 50 100
1 inch = 50 ft.

"ONLY COPIES OF THIS MAP SIGNED IN RED INK AND EMBOSSED WITH THE SEAL OF AN OFFICER OF C.T. MALE ASSOCIATES, P.C. OR A DESIGNATED REPRESENTATIVE SHALL BE CONSIDERED TO BE A VALID TRUE COPY".

DATE		REVISIONS RECORD/DESCRIPTION	DRAFTER	CHECK	APPR.
	1				
	2				
	3				
	4				
	5				
	6				
	7				
	8				
	9				

UNAUTHORIZED ALTERATION OR ADDITION TO THIS DOCUMENT IS A VIOLATION OF SECTION 7209 SUBDIVISION 2 OF THE NEW YORK STATE EDUCATION LAW.

© 2006 C.T. MALE ASSOCIATES, P.C.

APPROVED:
DRAFTED : SMW
CHECKED : DGD
PROJ. NO: 06.6448
SCALE : 1"=50'
DATE : JUNE 21, 2007

FIGURE 6
DISTRIBUTION OF TOTAL VOC's IN GROUNDWATER FOR WELLS MW-1A - MW-10A
SUPPLIMENTAL PHASE II ENVIRONMENTAL SITE ASSESSMENT
OLD CHAMPLAIN MILL SITE

VILLAGE OF WHITEHALL — WASHINGTON COUNTY, NEW YORK

C.T. MALE ASSOCIATES, P.C.
50 CENTURY HILL DRIVE, P.O. BOX 727, LATHAM, NY 12110
518.786.7400 ■ FAX 518.786.7299
ARCHITECTURE & BUILDING SYSTEMS ENGINEERING ■ CIVIL ENGINEERING
ENVIRONMENTAL SERVICES ■ SURVEY & LAND INFORMATION SERVICES

SHEET 1 OF 1
DWG. NO: 07–XXX

CAD DWG. FILE NAME:FIGURE 6-DISTRIB OF VOCS.DWG

CAD DWG. FILE NAME:FIGURE 6-DISTRIB OF VOC

APPENDIX B

Subsurface Exploration Logs and Monitoring Well Construction Logs

C.T. MALE ASSOCIATES, P.C.

GEOPROBE SUBSURFACE EXPLORATION LOG

BORING NO.: SB-1A
ELEV.: **DATUM:**
START DATE: 11/16/06 **FINISH DATE: 11/16/06**
SHEET 1 OF 1

PROJECT: Old Champlain Mill — CTM PROJECT NO.: 06.6448
Village of Whitehall, Washington County, NY — CTM OBSERVER: Dan Achtyl

DEPTH (FT.)	SAMPLE INTERVAL	SAMPLE NUMBER	SAMPLE RECOVERY (FT)	SAMPLE CLASSIFICATION	NOTES
				Vegetation at surface	
4		1	2.5	Brown fine to coarse SAND & GRAVEL, trace silt — 2'	
				Brown/gray CLAY & SILT	
8		2	4.0		Wet at 8'
		3	4.0	— 10'	
12				Gray fine SAND & SILT	
		4	4.0	— 14'	
				Gray fine to coarse SAND, little silt — 15'	
16				Gray CLAY — 16'	
		5	0	No recovery	
20					
				End of boring at 20'	MW installed. See MW construction log.
24					
28					

DRILLING CONTRACTOR: SJB — GEOPROBE TYPE: Truck Mount
METHOD OF SAMPLING: 4x2 Macro Core

GROUNDWATER LEVEL READINGS

DATE	LEVEL	REFERENCE MEASURING POINT

SAMPLE CLASSIFICATION BY: DA

THE SUBSURFACE INFORMATION SHOWN HEREON WAS OBTAINED FOR C.T. MALE ASSESSMENT PURPOSES. IT IS MADE AVAILABLE TO AUTHORIZED USERS ONLY THAT THEY MAY HAVE ACCESS TO THE SAME INFORMATION AVAILABLE TO C.T.MALE. IT IS PRESENTED IN GOOD FAITH, BUT IS NOT INTENDED AS A SUBSTITUTE FOR INVESTIGATIONS, INTERPRETATION OR JUDGMENT OF SUCH AUTHORIZED USERS.

C.T. MALE ASSOCIATES, P.C.

GEOPROBE SUBSURFACE EXPLORATION LOG

BORING NO.: SB-2A
ELEV.: **DATUM:**
START DATE: 5/16/07 **FINISH DATE: 5/16/07**
SHEET 1 OF 1

PROJECT: Old Champlain Mill — CTM PROJECT NO.: 06.6448

LOCATION: Village of Whitehall, Washington County, NY — CTM OBSERVER: Dan Achtyl

DEPTH (FT.)	SAMPLE INTERVAL	SAMPLE NUMBER	SAMPLE RECOVERY (FT)	SAMPLE CLASSIFICATION	NOTES
4		1	1.5	Brown/Black SAND & GRAVEL & SLAG, trace silt 4'	Wet at 4'
8		2	0.5	Coarse GRAVEL, Some Silt 5' Brown/Gray SILT	
12		3	0.5	12'	Coarse GRAVEL seam at 11' bgs
16		4	4.0	Brown/Gray SILT, some Sand 13' Gray fine to coarse SAND, Some Silt 15' Gray CLAY 16'	
20		5	4.0	Brown/Gray SILT 17' Gray SAND 18' Gray CLAY 20'	Appears to be collapse from above
24				End of boring at 20'	MW installed. See MW construction log.
28					

DRILLING CONTRACTOR: SJB — GEOPROBE TYPE: Truck Mount

METHOD OF SAMPLING: 4x2 Macro Core

GROUNDWATER LEVEL READINGS

DATE	LEVEL	REFERENCE MEASURING POINT

SAMPLE CLASSIFICATION BY: DA

THE SUBSURFACE INFORMATION SHOWN HEREON WAS OBTAINED FOR C.T. MALE ASSESSMENT PURPOSES. IT IS MADE AVAILABLE TO AUTHORIZED USERS ONLY THAT THEY MAY HAVE ACCESS TO THE SAME INFORMATION AVAILABLE TO C.T.MALE. IT IS PRESENTED IN GOOD FAITH, BUT IS NOT INTENDED AS A SUBSTITUTE FOR INVESTIGATIONS, INTERPRETATION OR JUDGMENT OF SUCH AUTHORIZED USERS.

C.T. MALE ASSOCIATES, P.C.

GEOPROBE SUBSURFACE EXPLORATION LOG

BORING NO.: SB-3A
ELEV.: **DATUM:**
START DATE: 5/16/07 **FINISH DATE: 5/16/07**
SHEET 1 OF 1

PROJECT: Old Champlain Mill — CTM PROJECT NO.: 06.6448

LOCATION: Village of Whitehall, Washington County, NY — CTM OBSERVER: Dan Achtyl

DEPTH (FT.)	SAMPLE INTERVAL	SAMPLE NUMBER	SAMPLE RECOVERY (FT)	SAMPLE CLASSIFICATION	NOTES
		1	3.0	Concrete 0.5'	
				Brown SILT, little sand 2'	
4				Gray SILT, little sand, trace clay 4'	
		2	4.0	Gray/Brown SILT 7'	
8				Gray/Brown SILT, Some Sand 9'	Wet at 9'
		3	4.0	Gray/Brown fine to coarse SAND, trace silt	
12					
		4	3.0		
16				16'	
		5	3.0	Gray SAND & SILT 18'	
				Gray/Brown fine to coarse SAND, trace silt	
20					
		6	2		
24				24'	
		7	2	Gray CLAY 26'	
				Gray fine to coarse SAND, trace silt	
28				28'	MW installed. See MW construction log.
				End of Boring at 28'	

DRILLING CONTRACTOR: SJB — GEOPROBE TYPE: Truck Mount
METHOD OF SAMPLING: 4x2 Macro Core

GROUNDWATER LEVEL READINGS

DATE	LEVEL	REFERENCE MEASURING POINT

SAMPLE CLASSIFICATION BY: DA

THE SUBSURFACE INFORMATION SHOWN HEREON WAS OBTAINED FOR C.T. MALE ASSESSMENT PURPOSES. IT IS MADE AVAILABLE TO AUTHORIZED USERS ONLY THAT THEY MAY HAVE ACCESS TO THE SAME INFORMATION AVAILABLE TO C.T.MALE. IT IS PRESENTED IN GOOD FAITH, BUT IS NOT INTENDED AS A SUBSTITUTE FOR INVESTIGATIONS, INTERPRETATION OR JUDGMENT OF SUCH AUTHORIZED USERS.

C.T. MALE ASSOCIATES, P.C.

GEOPROBE SUBSURFACE EXPLORATION LOG

BORING NO.: SB-4A
ELEV.: **DATUM:**
START DATE: 5/16/07 **FINISH DATE: 5/16/07**
SHEET 1 OF 1

PROJECT: Old Champlain Mill — CTM PROJECT NO.: 06.6448

LOCATION: Village of Whitehall, Washington County, NY — CTM OBSERVER: Dan Achtyl

DEPTH (FT.)	SAMPLE INTERVAL	SAMPLE NUMBER	SAMPLE RECOVERY (FT)	SAMPLE CLASSIFICATION		NOTES
		1	3.0	Concrete	0.5'	
				Brown/Gray SILT	3'	
4				Gray SILT	5.5'	Wet at 6'
		2	4.0			
				Gray SAND, trace silt	7'	
8				Brown/Gray SILT, Some Sand (wet)	10'	
		3	4.0			
12				Brown fine to coarse SAND, trace silt (moist)	15.5'	
		4				
16				Gray CLAY	16'	
		5	4.0	Brown coarse SAND, trace silt (wet)	18.75'	
20				Gray CLAY	20'	
				End of Boring at 20'		MW installed. See MW construction log.
24						
28						

DRILLING CONTRACTOR: SJB — GEOPROBE TYPE: Truck Mount
METHOD OF SAMPLING: 4x2 Macro Core

GROUNDWATER LEVEL READINGS

DATE	LEVEL	REFERENCE MEASURING POINT

SAMPLE CLASSIFICATION BY: DA

THE SUBSURFACE INFORMATION SHOWN HEREON WAS OBTAINED FOR C.T. MALE ASSESSMENT PURPOSES. IT IS MADE AVAILABLE TO AUTHORIZED USERS ONLY THAT THEY MAY HAVE ACCESS TO THE SAME INFORMATION AVAILABLE TO C.T.MALE. IT IS PRESENTED IN GOOD FAITH, BUT IS NOT INTENDED AS A SUBSTITUTE FOR INVESTIGATIONS, INTERPRETATION OR JUDGMENT OF SUCH AUTHORIZED USERS.

C.T. MALE ASSOCIATES, P.C.

GEOPROBE SUBSURFACE EXPLORATION LOG

BORING NO.: SB-5A
ELEV.: **DATUM:**
START DATE: 5/16/07 **FINISH DATE: 5/16/07**
SHEET 1 OF 1

PROJECT: Old Champlain Mill — CTM PROJECT NO.: 06.6448

LOCATION: Village of Whitehall, Washington County, NY — CTM OBSERVER: Dan Achtyl

DEPTH (FT.)	SAMPLE INTERVAL	SAMPLE NUMBER	SAMPLE RECOVERY (FT)	SAMPLE CLASSIFICATION	NOTES
				Vegetation at surface	
4		1	2.0	Fill: Black/Brown coarse SAND & GRAVEL & CINDER 2' Brown SILT	Weathered rock at 4'
8		2	2.0	Brown/Gray SILT, trace sand	Wet at 4' Coarse gravel at 8'
12		3	4.0	9' Brown/Gray SILT & SAND (wet)	
16		4	4.0	Brown SILT & SAND (wet) 14' Gray SAND, trace silt (wet)	
20		5	4.0	18' Gray CLAY 20'	
24				End of Boring at 20'	MW installed. See MW construction log.
28					

DRILLING CONTRACTOR: SJB — GEOPROBE TYPE: Truck Mount

METHOD OF SAMPLING: 4x2 Macro Core

GROUNDWATER LEVEL READINGS

DATE	LEVEL	REFERENCE MEASURING POINT

SAMPLE CLASSIFICATION BY: DA

THE SUBSURFACE INFORMATION SHOWN HEREON WAS OBTAINED FOR C.T. MALE ASSESSMENT PURPOSES. IT IS MADE AVAILABLE TO AUTHORIZED USERS ONLY THAT THEY MAY HAVE ACCESS TO THE SAME INFORMATION AVAILABLE TO C.T.MALE. IT IS PRESENTED IN GOOD FAITH, BUT IS NOT INTENDED AS A SUBSTITUTE FOR INVESTIGATIONS, INTERPRETATION OR JUDGMENT OF SUCH AUTHORIZED USERS.

C.T. MALE ASSOCIATES, P.C.

GEOPROBE SUBSURFACE EXPLORATION LOG

BORING NO.: SB-6A
ELEV.: **DATUM:**
START DATE: 5/16/07 **FINISH DATE: 5/16/07**
SHEET 1 OF 1

PROJECT: Old Champlain Mill — CTM PROJECT NO.: 06.6448

LOCATION: Village of Whitehall, Washington County, NY — CTM OBSERVER: Dan Achtyl

DEPTH (FT.)	SAMPLE INTERVAL	SAMPLE NUMBER	SAMPLE RECOVERY (FT)	SAMPLE CLASSIFICATION	NOTES
				Vegetation at surface	
		1	3.5	Fill: Brown/Black SAND & GRAVEL & CINDER, trace brick	Brown clay seam at 1'
				2'	Fibers (white) noted at 2'
4				Brown/Gray SILT & SAND	Wet at 4'
		2	4.0		
				7'	
8				Brown SAND, trace silt (wet)	
		3	4.0	Brown SAND, trace silt (wet to moist)	Red sand from 10.5-11.0'
12					
		4			
				14'	
				Gray SAND, trace silt (wet)	
16				16'	Gray clay at bottom of 12-16' interval
				Brown SAND, trace brick, trace silt 17.5'	
				Gray SAND, trace silt 18.75'	
20				Gray CLAY 20'	
				End of Boring at 20'	MW installed. See MW construction log.
24					
28					

DRILLING CONTRACTOR: SJB — GEOPROBE TYPE: Truck Mount
METHOD OF SAMPLING: 4x2 Macro Core

GROUNDWATER LEVEL READINGS

DATE	LEVEL	REFERENCE MEASURING POINT

SAMPLE CLASSIFICATION BY: DA

THE SUBSURFACE INFORMATION SHOWN HEREON WAS OBTAINED FOR C.T. MALE ASSESSMENT PURPOSES. IT IS MADE AVAILABLE TO AUTHORIZED USERS ONLY THAT THEY MAY HAVE ACCESS TO THE SAME INFORMATION AVAILABLE TO C.T.MALE. IT IS PRESENTED IN GOOD FAITH, BUT IS NOT INTENDED AS A SUBSTITUTE FOR INVESTIGATIONS, INTERPRETATION OR JUDGMENT OF SUCH AUTHORIZED USERS.

C.T. MALE ASSOCIATES, P.C.

GEOPROBE SUBSURFACE EXPLORATION LOG

BORING NO.: SB-7A
ELEV.: **DATUM:**
START DATE: 5/17/07 **FINISH DATE: 5/17/07**
SHEET 1 OF 1

PROJECT: Old Champlain Mill — CTM PROJECT NO.: 06.6448

LOCATION: Village of Whitehall, Washington County, NY — CTM OBSERVER: Dan Achtyl

DEPTH (FT.)	SAMPLE INTERVAL	SAMPLE NUMBER	SAMPLE RECOVERY (FT)	SAMPLE CLASSIFICATION	NOTES
				Vegetation at surface	
		1	2.0	Brown fine to coarse SAND & GRAVEL & CINDER, Some Brick 1.5'	
4				Gray SILT & CLAY	
		2	4.0	Brown/Gray SILT & CLAY, Some Sand	
8				8'	Wet at 8'
		3	1.0	Brown/Gray SAND & SILT (wet)	
12				12'	
		4	2.0	Brown SAND, trace silt (wet to moist)	
				15.5'	
16				Gray CLAY 16'	
		5	0.5	Brown SAND, trace silt	Brown sand in 16-20' interval appears to be collapse from above
20				20'	
				End of Boring at 20'	MW installed. See MW construction log.
24					
28					

DRILLING CONTRACTOR: SJB — GEOPROBE TYPE: Truck Mount

METHOD OF SAMPLING: 4x2 Macro Core

GROUNDWATER LEVEL READINGS

DATE	LEVEL	REFERENCE MEASURING POINT

SAMPLE CLASSIFICATION BY: DA

THE SUBSURFACE INFORMATION SHOWN HEREON WAS OBTAINED FOR C.T. MALE ASSESSMENT PURPOSES. IT IS MADE AVAILABLE TO AUTHORIZED USERS ONLY THAT THEY MAY HAVE ACCESS TO THE SAME INFORMATION AVAILABLE TO C.T.MALE. IT IS PRESENTED IN GOOD FAITH, BUT IS NOT INTENDED AS A SUBSTITUTE FOR INVESTIGATIONS, INTERPRETATION OR JUDGMENT OF SUCH AUTHORIZED USERS.

C.T. MALE ASSOCIATES, P.C.

GEOPROBE SUBSURFACE EXPLORATION LOG

BORING NO.: SB-8A
ELEV.: **DATUM:**
START DATE: 5/17/07 **FINISH DATE: 5/17/07**
SHEET 1 OF 1

PROJECT: Old Champlain Mill — CTM PROJECT NO.: 06.6448

LOCATION: Village of Whitehall, Washington County, NY — CTM OBSERVER: Dan Achtyl

DEPTH (FT.)	SAMPLE INTERVAL	SAMPLE NUMBER	SAMPLE RECOVERY (FT)	SAMPLE CLASSIFICATION	NOTES
				Vegetation at surface	
4		1	1.3	Fill: Brown/Black SAND & GRAVEL 2'	
				Brown/Gray SILT, Some Sand	
8		2	4.0	7'	Wet at 6'
				Brown/Gray SAND, trace silt (wet)	
12		3	4.0	Brown SAND, trace silt (wet)	Red sand from 10-11'
		4	4.0	15.75'	
16				Gray CLAY 16'	
		5	4.0	Brown SAND, trace silt 18'	
20				Gray CLAY 20'	
24				End of Boring at 20'	MW installed. See MW construction log.
28					

DRILLING CONTRACTOR: SJB — GEOPROBE TYPE: Truck Mount

METHOD OF SAMPLING: 4x2 Macro Core

GROUNDWATER LEVEL READINGS

DATE	LEVEL	REFERENCE MEASURING POINT

SAMPLE CLASSIFICATION BY: DA

THE SUBSURFACE INFORMATION SHOWN HEREON WAS OBTAINED FOR C.T. MALE ASSESSMENT PURPOSES. IT IS MADE AVAILABLE TO AUTHORIZED USERS ONLY THAT THEY MAY HAVE ACCESS TO THE SAME INFORMATION AVAILABLE TO C.T.MALE. IT IS PRESENTED IN GOOD FAITH, BUT IS NOT INTENDED AS A SUBSTITUTE FOR INVESTIGATIONS, INTERPRETATION OR JUDGMENT OF SUCH AUTHORIZED USERS.

C.T. MALE ASSOCIATES, P.C.

GEOPROBE SUBSURFACE EXPLORATION LOG

BORING NO.: SB-9A
ELEV.: **DATUM:**
START DATE: 5/17/07 **FINISH DATE: 5/17/07**
SHEET 1 OF 1

PROJECT: Old Champlain Mill — CTM PROJECT NO.: 06.6448

LOCATION: Village of Whitehall, Washington County, NY — CTM OBSERVER: Dan Achtyl

DEPTH (FT.)	SAMPLE INTERVAL	SAMPLE NUMBER	SAMPLE RECOVERY (FT)	SAMPLE CLASSIFICATION	NOTES
				Vegetation at surface	
		1	3.0	Fill: Brown/Black SAND & GRAVEL, trace cinder, trace silt	
				2'	
				Gray SILT & CLAY 3'	
4				Brown/Gray SAND, Some Silt	Wet at 4'
		2	4.0		
				7'	
8				Brown/Gray SILT	
		3	4.0	9'	
				Brown coarse SAND, Some Silt	
12					Red sand from 11-11.5'
		4	4.0		
				15'	
16				Gray coarse SAND, trace silt 16'	Gray clay at end of sample at 16'
		5	4.0	Brown coarse SAND, trace silt	
				19'	
				Gray coarse SAND, trace silt 19.5'	
20				Gray CLAY 20'	MW installed. See MW construction log.
				End of Boring at 20'	
24					
28					

DRILLING CONTRACTOR: SJB — GEOPROBE TYPE: Truck Mount

METHOD OF SAMPLING: 4x2 Macro Core

GROUNDWATER LEVEL READINGS

DATE	LEVEL	REFERENCE MEASURING POINT

SAMPLE CLASSIFICATION BY: DA

THE SUBSURFACE INFORMATION SHOWN HEREON WAS OBTAINED FOR C.T. MALE ASSESSMENT PURPOSES. IT IS MADE AVAILABLE TO AUTHORIZED USERS ONLY THAT THEY MAY HAVE ACCESS TO THE SAME INFORMATION AVAILABLE TO C.T.MALE. IT IS PRESENTED IN GOOD FAITH, BUT IS NOT INTENDED AS A SUBSTITUTE FOR INVESTIGATIONS, INTERPRETATION OR JUDGMENT OF SUCH AUTHORIZED USERS.

C.T. MALE ASSOCIATES, P.C.

GEOPROBE SUBSURFACE EXPLORATION LOG

BORING NO.: SB-10A
ELEV.: **DATUM:**
START DATE: 5/17/07 **FINISH DATE: 5/17/07**
SHEET 1 OF 1

PROJECT: Old Champlain Mill — CTM PROJECT NO.: 06.6448

LOCATION: Village of Whitehall, Washington County, NY — CTM OBSERVER: Dan Achtyl

DEPTH (FT.)	SAMPLE INTERVAL	SAMPLE NUMBER	SAMPLE RECOVERY (FT)	SAMPLE CLASSIFICATION	NOTES
				Vegetation at surface	
4		1	2.5	Brown/Gray SILT, little sand — 3'	
				Brown/Gray SILT & SAND — 5.5'	Wet at 5.5'
8		2	4.0	Brown coarse SAND, trace silt — 11'	
12		3	4.0	Gray coarse SAND, trace silt — 11.75'	
				Gray CLAY — 12'	
		4	4.0	Brown SAND, trace silt — 12.5'	
				Gray SAND, trace silt — 13'	
16				Gray CLAY — 16'	
		5	4.0	Brown SAND, trace silt — 18'	
				Gray SAND, trace silt — 19'	
20				Gray CLAY — 20'	
				End of Boring at 20'	MW installed. See MW construction log.
24					
28					

DRILLING CONTRACTOR: SJB — GEOPROBE TYPE: Truck Mount
METHOD OF SAMPLING: 4x2 Macro Core

GROUNDWATER LEVEL READINGS

DATE	LEVEL	REFERENCE MEASURING POINT

SAMPLE CLASSIFICATION BY: DA

THE SUBSURFACE INFORMATION SHOWN HEREON WAS OBTAINED FOR C.T. MALE ASSESSMENT PURPOSES. IT IS MADE AVAILABLE TO AUTHORIZED USERS ONLY THAT THEY MAY HAVE ACCESS TO THE SAME INFORMATION AVAILABLE TO C.T.MALE. IT IS PRESENTED IN GOOD FAITH, BUT IS NOT INTENDED AS A SUBSTITUTE FOR INVESTIGATIONS, INTERPRETATION OR JUDGMENT OF SUCH AUTHORIZED USERS.

Well No. MW-1A

MONITORING WELL CONSTRUCTION LOG

C.T. MALE ASSOCIATES, P.C.

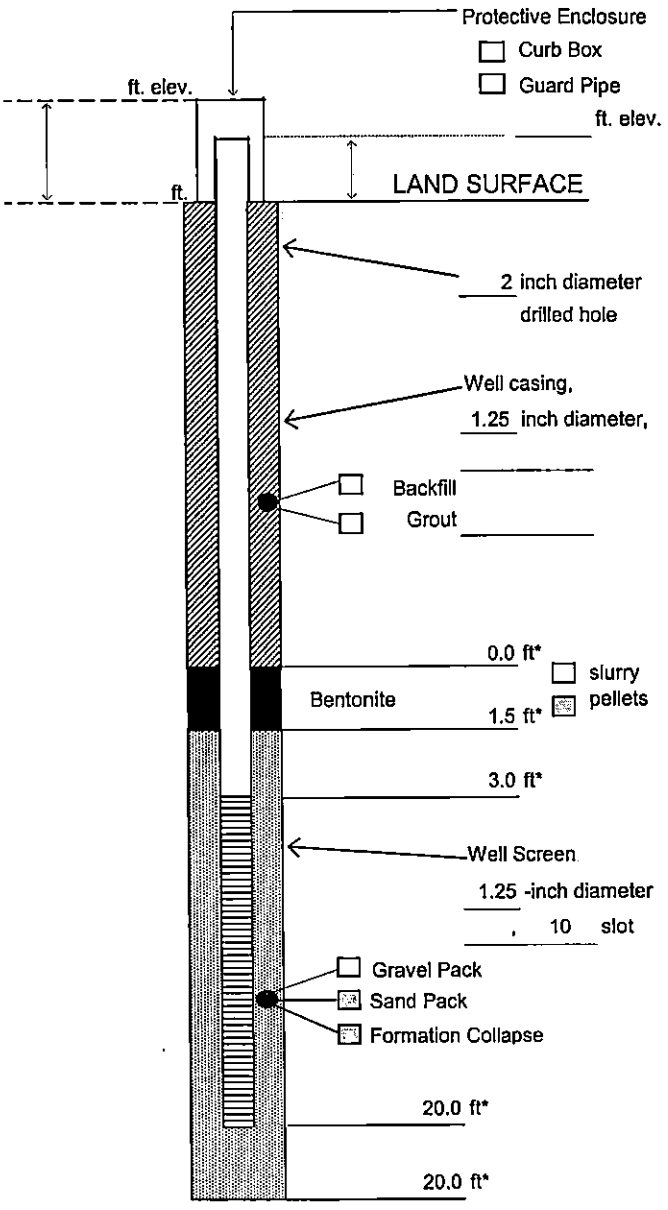

* Depth below land surface.

Project Number 06.6448

Project Name Old Champlain Mill

Well No. MW-1A Boring No. SB-1A

Town/City Village of Whitehall

County Washington State NY

Installation Date(s) 5/16/2007

Drilling Contractor SJB

Drilling Method Geoprobe

Water Depth From Top of Riser ____ ft ____ Date

C.T. Male Observer Dan Achtyl

Notes:

17' 10 slot well screen
5' riser
1 end cap
1 pvc slip cap
1/4 bag #0 sand
1/10 bag bentonite

Well No. MW-2A

MONITORING WELL CONSTRUCTION LOG

C.T. MALE ASSOCIATES, P.C.

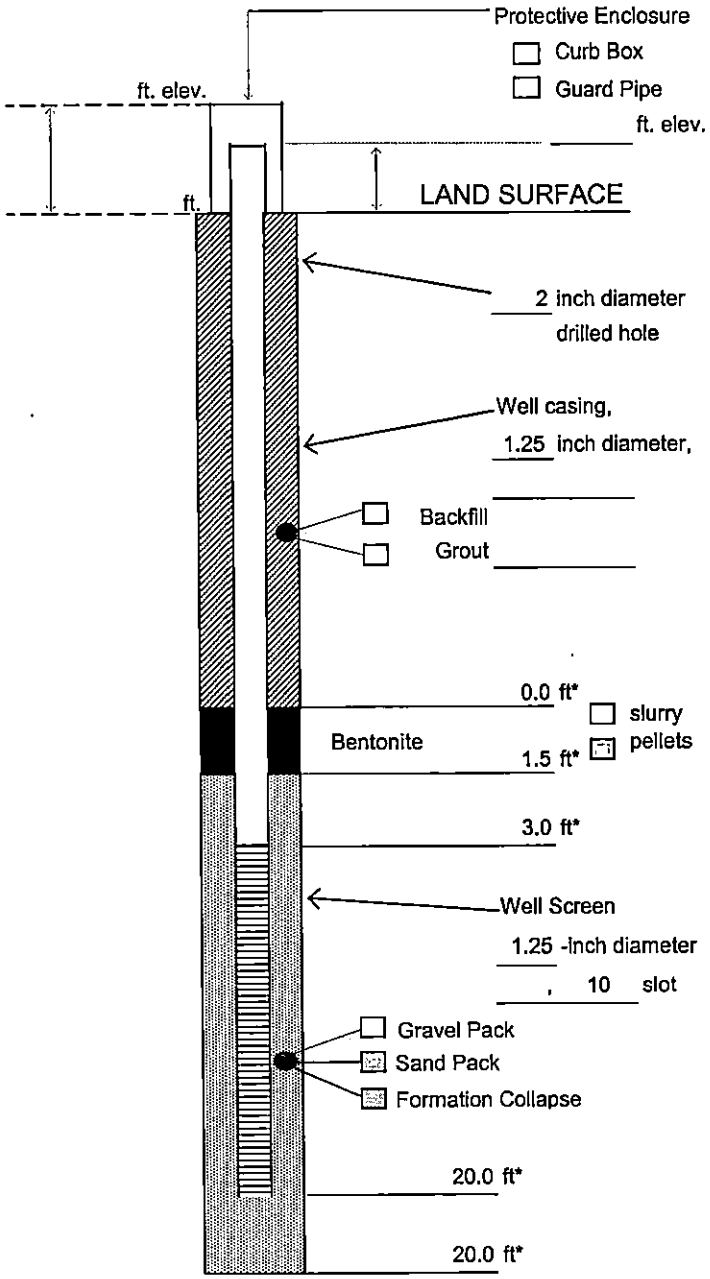

* Depth below land surface.

Project Number 06.6448

Project Name Old Champlain Mill

Well No. MW-2A Boring No. SB-2A

Town/City Village of Whitehall

County Washington State NY

Installation Date(s) 5/16/2007

Drilling Contractor SJB

Drilling Method Geoprobe

Water Depth From Top of Riser _____ ft _____ Date

C.T. Male Observer Dan Achtyl

Notes:

17' 10 slot well screen
5' riser
1 end cap
1 pvc slip cap
1/4 bag #0 sand
1/10 bag bentonite

Well No. MW-3A

MONITORING WELL CONSTRUCTION LOG

C.T. MALE ASSOCIATES, P.C.

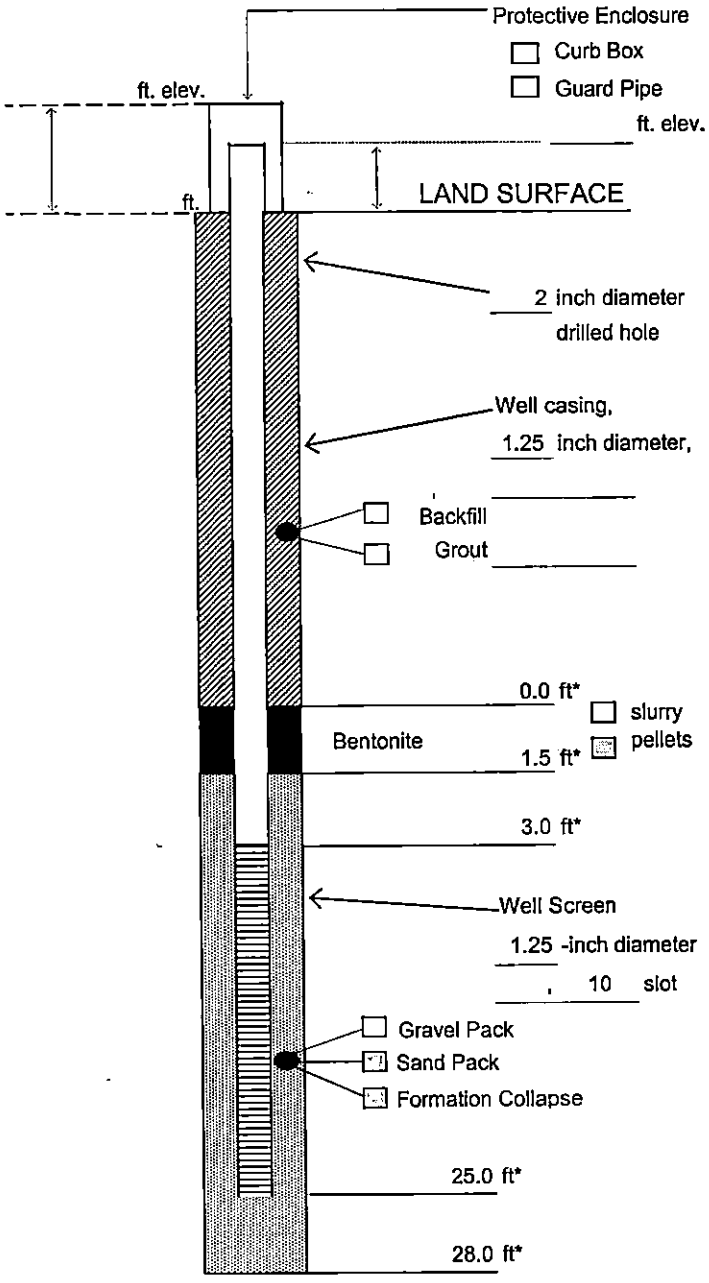

* Depth below land surface.

Project Number 06.6448

Project Name Old Champlain Mill

Well No. MW-3A Boring No. SB-3A

Town/City Village of Whitehall

County Washington State NY

Installation Date(s) 5/16/2007

Drilling Contractor SJB

Drilling Method Geoprobe

Water Depth From Top of Riser _____ ft _____ Date

C.T. Male Observer Dan Achtyl

Notes:

22' 10 slot well screen
5' riser
1 end cap
1 pvc slip cap
1/4 bag #0 sand
1/10 bag bentonite

Well No. MW-4A

MONITORING WELL CONSTRUCTION LOG

C.T. MALE ASSOCIATES, P.C.

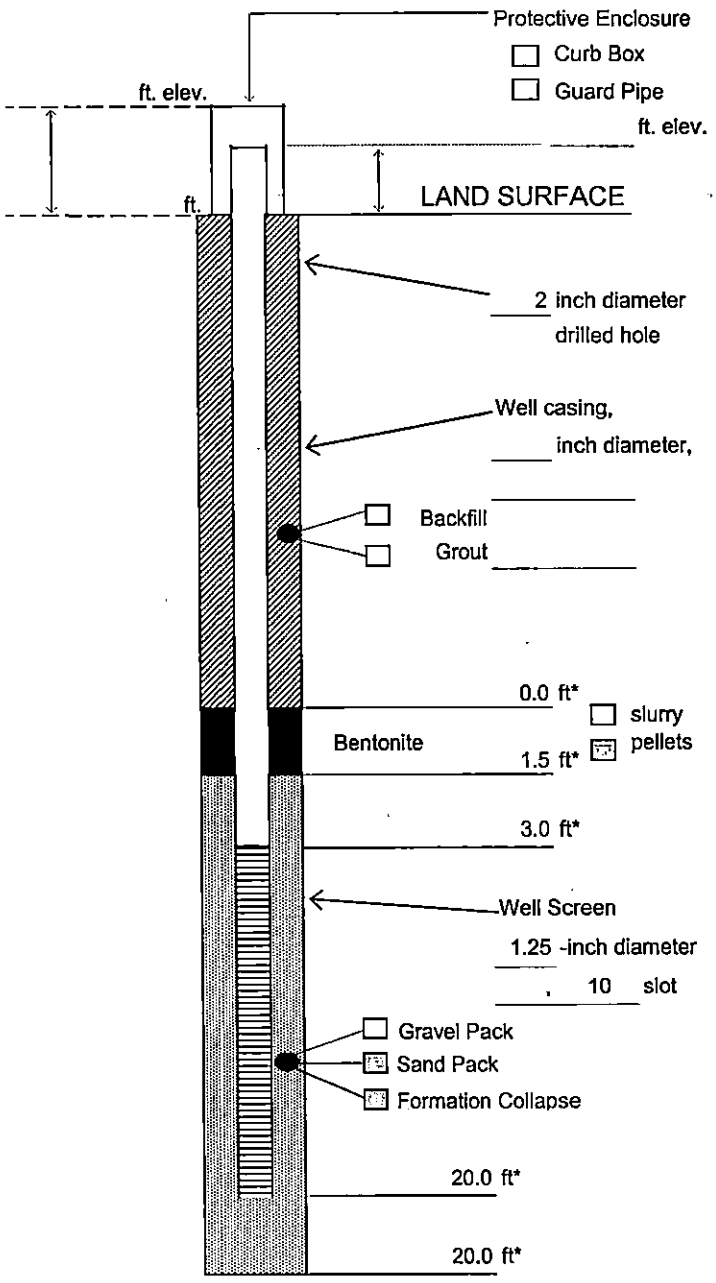

* Depth below land surface.

Project Number 06.6448

Project Name Old Champlain Mill

Well No. MW-4A Boring No. SB-4A

Town/City Village of Whitehall

County Washington State NY

Installation Date(s) 5/16/2007

Drilling Contractor SJB

Drilling Method Geoprobe

Water Depth From Top of Riser ____ ft ____ Date

C.T. Male Observer Dan Achtyl

Notes:

17' 10 slot well screen
5' riser
1 end cap
1 pvc slip cap
1/4 bag #0 sand
1/10 bag bentonite

Well No. MW-5A

MONITORING WELL CONSTRUCTION LOG

C.T. MALE ASSOCIATES, P.C.

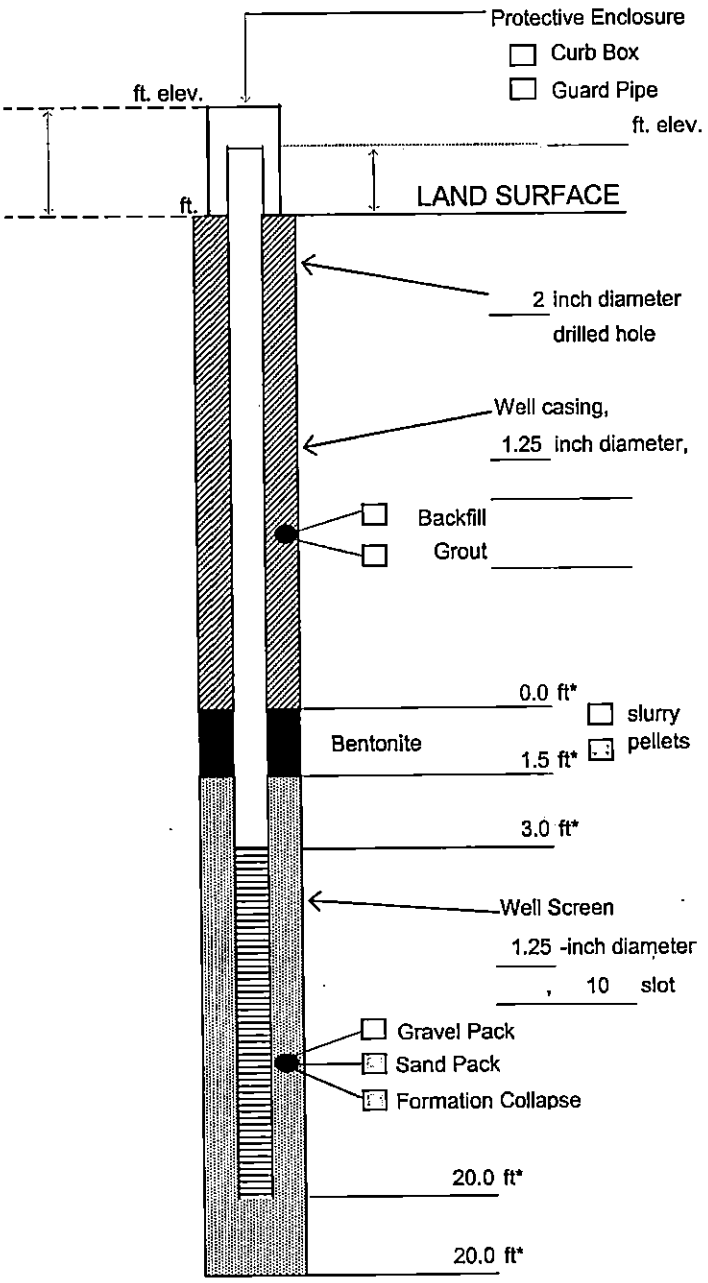

* Depth below land surface.

Project Number 06.6448

Project Name Old Champlain Mill

Well No. MW-5A Boring No. SB-5A

Town/City Village of Whitehall

County Washington State NY

Installation Date(s) 5/16/2007

Drilling Contractor SJB

Drilling Method Geoprobe

Water Depth From Top of Riser _____ ft _____ Date

C.T. Male Observer Dan Achtyl

Notes:
17' 10 slot well screen
5' riser
1 end cap
1 pvc slip cap
1/4 bag #0 sand
1/10 bag bentonite

Well No. MW-6A

MONITORING WELL CONSTRUCTION LOG

C.T. MALE ASSOCIATES, P.C.

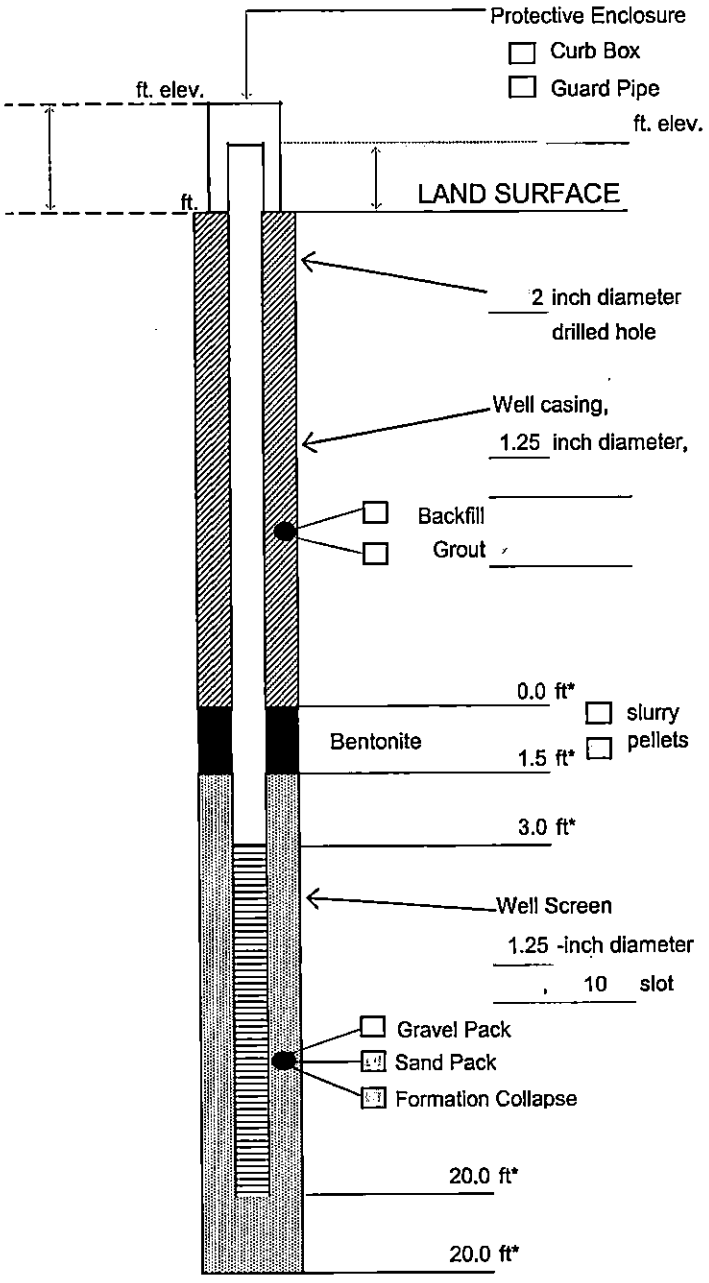

* Depth below land surface.

Project Number 06.6448

Project Name Old Champlain Mill

Well No. MW-6A Boring No. SB-6A

Town/City Village of Whitehall

County Washington State NY

Installation Date(s) 5/16/2007

Drilling Contractor SJB

Drilling Method Geoprobe

Water Depth From Top of Riser _____ ft _____ Date

C.T. Male Observer Dan Achtyl

Notes:

17' 10 slot well screen
5' riser
1 end cap
1 pvc slip cap
1/4 bag #0 sand
1/10 bag bentonite

Well No. MW-7A

MONITORING WELL CONSTRUCTION LOG

C.T. MALE ASSOCIATES, P.C.

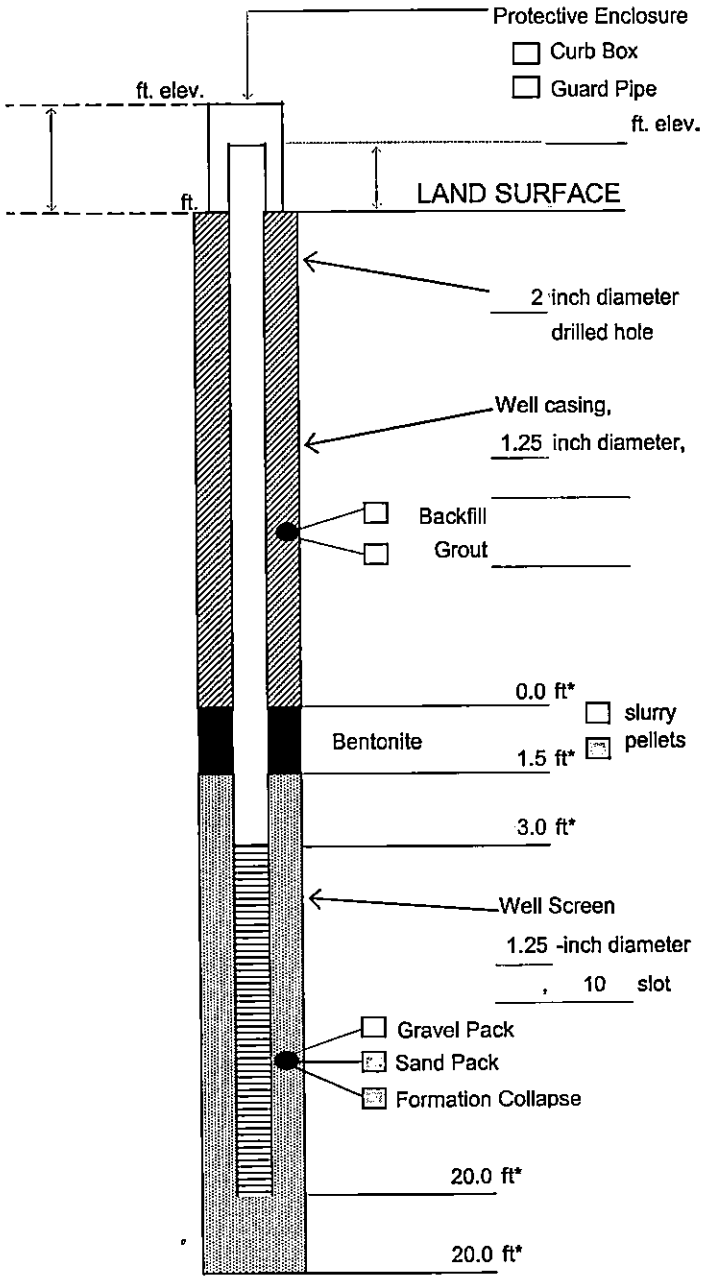

* Depth below land surface.

Project Number 06.6448

Project Name Old Champlain Mill

Well No. MW-7A Boring No. SB-7A

Town/City Village of Whitehall

County Washington State NY

Installation Date(s) 5/17/2007

Drilling Contractor SJB

Drilling Method Geoprobe

Water Depth From Top of Riser _____ ft _____ Date

C.T. Male Observer Dan Achtyl

Notes:

17' 10 slot well screen
5' riser
1 end cap
1 pvc slip cap
1/4 bag #0 sand
1/10 bag bentonite

Well No. MW-8A

MONITORING WELL CONSTRUCTION LOG

C.T. MALE ASSOCIATES, P.C.

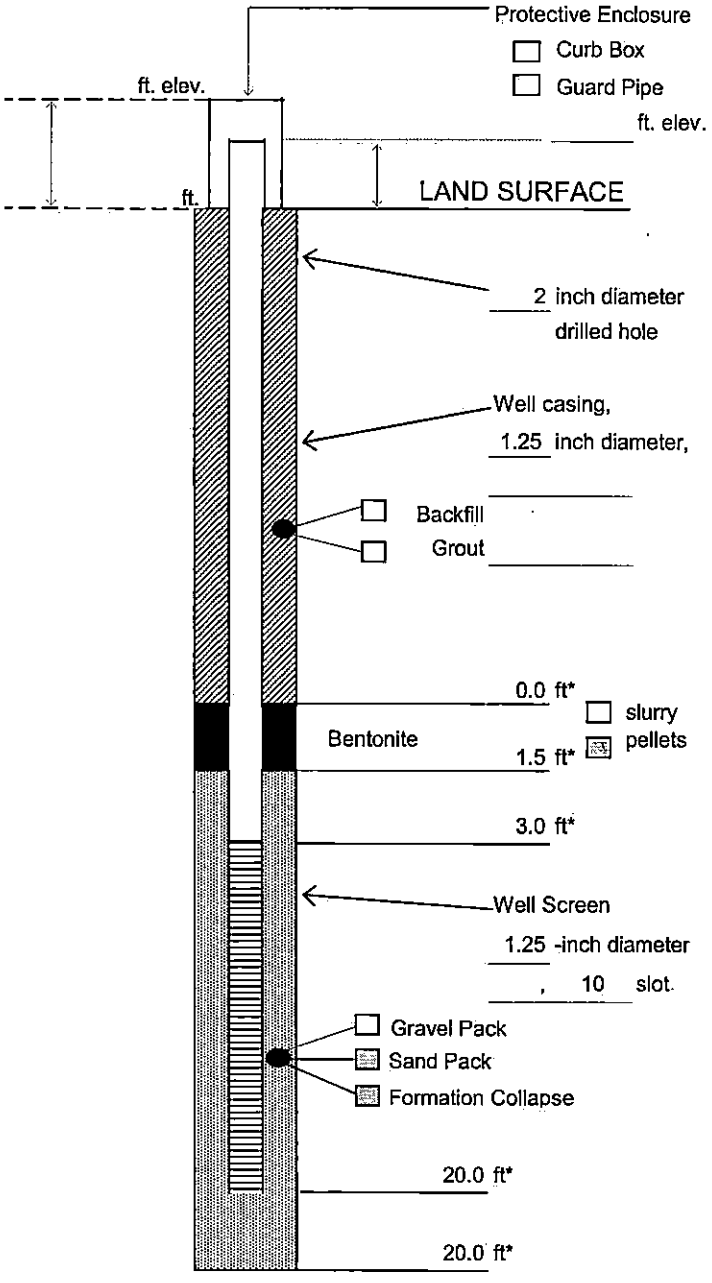

* Depth below land surface.

Project Number 06.6448

Project Name Old Champlain Mill

Well No. MW-8A Boring No. SB-8A

Town/City Village of Whitehall

County Washington State NY

Installation Date(s) 5/17/2007

Drilling Contractor SJB

Drilling Method Geoprobe

Water Depth From Top of Riser _____ ft _____ Date

C.T. Male Observer Dan Achtyl

Notes:
17' 10 slot well screen
5' riser
1 end cap
1 pvc slip cap
1/4 bag #0 sand
1/10 bag bentonite

Well No. MW-9A

MONITORING WELL CONSTRUCTION LOG

C.T. MALE ASSOCIATES, P.C.

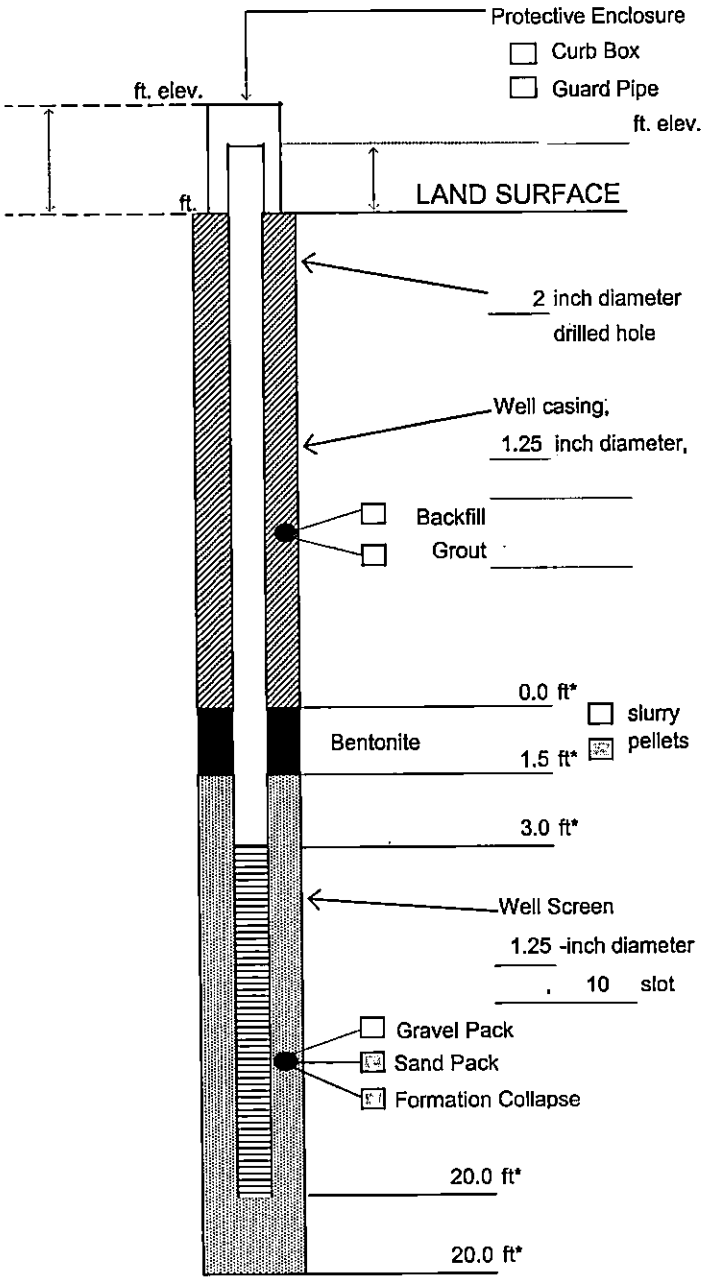

* Depth below land surface.

Project Number 06.6448

Project Name Old Champlain Mill

Well No. MW-9A Boring No. SB-9A

Town/City Village of Whitehall

County Washington State NY

Installation Date(s) 5/17/2007

Drilling Contractor SJB

Drilling Method Geoprobe

Water Depth From Top of Riser _____ ft _____ Date

C.T. Male Observer Dan Achtyl

Notes:

17' 10 slot well screen
5' riser
1 end cap
1 pvc slip cap
1/4 bag #0 sand
1/10 bag bentonite

Well No. MW-10A

MONITORING WELL CONSTRUCTION LOG

C.T. MALE ASSOCIATES, P.C.

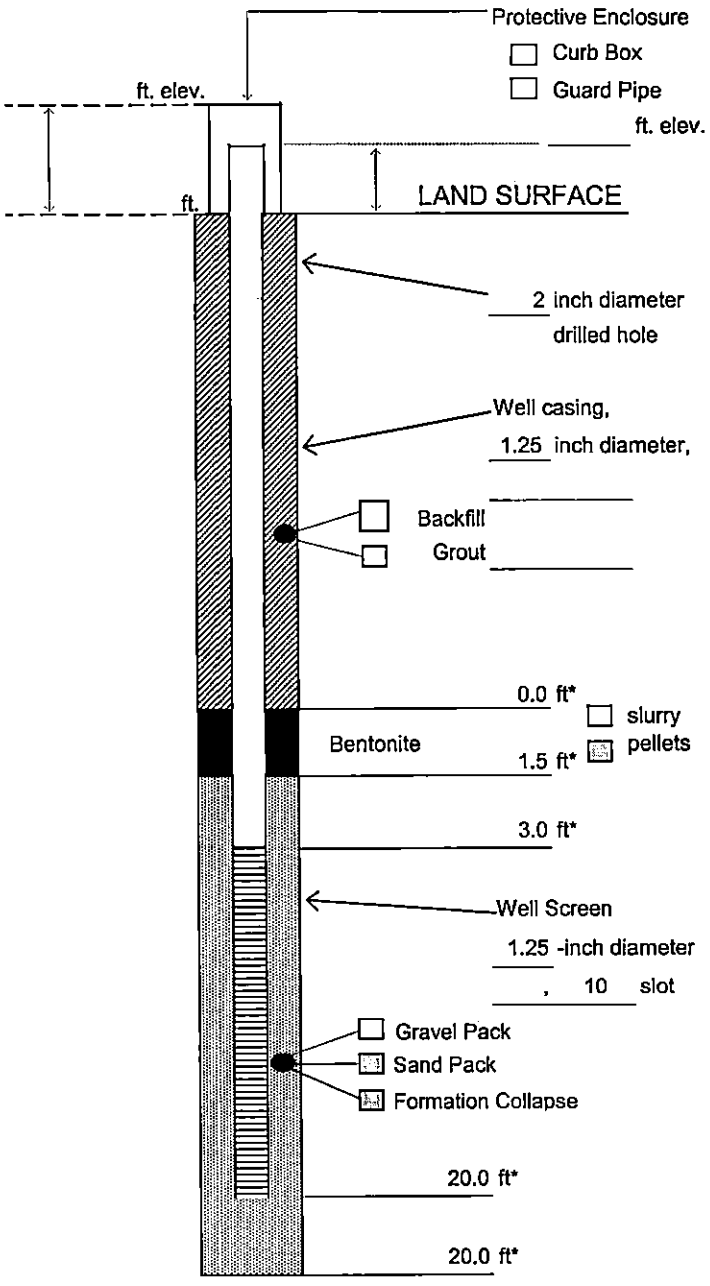

* Depth below land surface.

Project Number 06.6448

Project Name Old Champlain Mill

Well No. MW-10A Boring No. SB-10A

Town/City Village of Whitehall

County Washington State NY

Installation Date(s) 5/17/2007

Drilling Contractor SJB

Drilling Method Geoprobe

Water Depth From Top of Riser _____ ft _____ Date

C.T. Male Observer Dan Achtyl

Notes:

17' 10 slot well screen
5' riser
1 end cap
1 pvc slip cap
1/4 bag #0 sand
1/10 bag bentonite

APPENDIX C

Organic Vapor Headspace Analysis Logs

ORGANIC VAPOR HEADSPACE ANALYSIS LOG

PROJECT: Old Champlain Mill	PROJECT #: 06.6448	PAGE 1 OF 4
CLIENT:Gary Bowitch		DATE
LOCATION: Village of Whitehall, NY		COLLECTED: 05/16/07
INSTRUMENT USED: MiniRAE 2000	LAMP 10.6 EV	DATE
DATE INSTRUMENT CALIBRATED: 05/18/07	BY: DA	ANALYZED: 05/18/07
TEMPERATURE OF SOIL: Ambient		ANALYST: DA

EXPLORATION NUMBER	SAMPLE NUMBER	DEPTH (FT.)	SAMPLE TYPE	SAMPLE READING (PPM)**	BACKGROUND READING (PPM)**	REMARKS
MW-1A	1	(0-2)	Soil	2.5	1.0	No odors/No staining
	1	(2-4)	Soil	3.0	1.0	No odors/No staining
	2	(4-6)	Soil	3.5	1.0	No odors/No staining
	2	(6-8)	Soil	7.6	1.0	No odors/No staining
	3	(8-10)	Soil	5.0	1.0	No odors/No staining
	3	(10-12)	Soil	4.9	1.5	No odors/No staining
	4	(12-14)	Soil	3.7	1.2	No odors/No staining
	4	(14-16)	Soil	2.9	1.2	No odors/No staining
MW-2A	1	(0-1)	Soil	3.5	1.4	No odors/No staining
	1	(2-4)	Soil	6.1	1.4	No odors/No staining
	2	(4-8)	Soil	4.3	1.4	No odors/No staining
	3	(8-12)	Soil	4.0	1.4	No odors/No staining
	4	(12-14)	Soil	10.2	1.4	No odors/No staining
	4	(14-16)	Soil	11.5	1.4	No odors/No staining
	5	(16-18)	Soil	4.4	1.4	No odors/No staining
	5	(18-20)	Soil	4.9	1.4	No odors/No staining

*Instrument was calibrated in accordance with manufacturer's recommended procedure using a calibration gas supplied by the manufacturer.
**PPM represents concentration of detectable volatile and gaseous compounds in parts per million of air.
***Due to poor sample recovery the sample is not sufficient enough to specify which portion of the recovered sample interval was collected .

ORGANIC VAPOR HEADSPACE ANALYSIS LOG

PROJECT: Old Champlain Mill	PROJECT #: 06.6448	PAGE 2 OF 4
CLIENT:Gary Bowitch		DATE
LOCATION: Village of Whitehall, NY		COLLECTED: 05/16/07
INSTRUMENT USED: MiniRAE 2000	LAMP 10.6 EV	DATE
DATE INSTRUMENT CALIBRATED: 05/18/07	BY: DA	ANALYZED: 05/18/07
TEMPERATURE OF SOIL: Ambient		ANALYST: DA

EXPLORATION NUMBER	SAMPLE NUMBER	DEPTH (FT.)	SAMPLE TYPE	SAMPLE READING (PPM)**	BACKGROUND READING (PPM)**	REMARKS
MW-3A	1	(0-2)	Soil	4.2	1.0	No odors/No staining
	1	(2-4)	Soil	4.8	1.3	No odors/No staining
	2	(4-6)	Soil	6.7	1.0	No odors/No staining
	2	(6-8)	Soil	2.3	1.0	No odors/No staining
	3	(8-10)	Soil	3.5	1.3	No odors/No staining
	3	(10-12)	Soil	2.9	0.6	No odors/No staining
	4	(12-14)	Soil	2.4	1.3	No odors/No staining
	4	(14-16)	Soil	2.9	1.4	No odors/No staining
	5	(16-18)	Soil	3.7	1.5	No odors/No staining
	5	(18-20)	Soil	5.1	1.5	No odors/No staining
	6	(20-22)	Soil	3.1	1.5	No odors/No staining
	6	(22-24)	Soil	3.9	1.3	No odors/No staining
	7	(24-26)	Soil	2.0	1.4	No odors/No staining
	7	(26-28)	Soil	2.1	1.2	No odors/No staining

*Instrument was calibrated in accordance with manufacturer's recommended procedure using a calibration gas supplied by the manufacturer.
**PPM represents concentration of detectable volatile and gaseous compounds in parts per million of air.
***Due to poor sample recovery the sample is not sufficient enough to specify which portion of the recovered sample interval was collected.

ORGANIC VAPOR HEADSPACE ANALYSIS LOG

PROJECT: Old Champlain Mill	PROJECT #: 06.6448	PAGE 3 OF 4
CLIENT:Gary Bowitch		DATE
LOCATION: Village of Whitehall, NY		COLLECTED: 05/16/07
INSTRUMENT USED: MiniRAE 2000 LAMP 10.6 EV		DATE
DATE INSTRUMENT CALIBRATED: 05/18/07 BY: DA		ANALYZED: 05/18/07
TEMPERATURE OF SOIL: Ambient		ANALYST: DA

EXPLORATION NUMBER	SAMPLE NUMBER	DEPTH (FT.)	SAMPLE TYPE	SAMPLE READING (PPM)**	BACKGROUND READING (PPM)**	REMARKS
MW-4A	1	(0-2)	Soil	4.5	0.6	No odors/No staining
	1	(2-4)	Soil	4.3	0.7	No odors/No staining
	2	(4-6)	Soil	3.7	0.9	No odors/No staining
	2	(6-8)	Soil	3.2	0.8	No odors/No staining
	3	(8-10)	Soil	5.0	0.9	No odors/No staining
	3	(10-12)	Soil	7.2	1.0	No odors/No staining
	4	(12-14)	Soil	25.7	0.8	No odors/No staining
	4	(14-16)	Soil	15.1	0.8	No odors/No staining
	5	(16-18)	Soil	6.9	0.9	No odors/No staining
	5	(18-20)	Soil	5.0	1.2	No odors/No staining
MW-5A	1	(0-2)	Soil	4.0	0.9	No odors/No staining
	1	(2-4)	Soil	6.7	1.0	No odors/No staining
	2	(4-6)	Soil	6.5	1.0	No odors/No staining
	2	(6-8)	Soil	6.8	1.0	No odors/No staining
	3	(8-10)	Soil	4.5	1.0	No odors/No staining
	3	(10-12)	Soil	6.3	1.2	No odors/No staining
	4	(12-14)	Soil	5.5	1.2	No odors/No staining
	4	(14-16)	Soil	5.0	1.2	No odors/No staining
	5	(16-18)	Soil	32.2	1.2	No odors/No staining
	5	(18-20)	Soil	25.1	1.2	No odors/No staining

*Instrument was calibrated in accordance with manufacturer's recommended procedure using a calibration gas supplied by the manufacturer.
**PPM represents concentration of detectable volatile and gaseous compounds in parts per million of air.
***Due to poor sample recovery the sample is not sufficient enough to specify which portion of the recovered sample interval was collected .

ORGANIC VAPOR HEADSPACE ANALYSIS LOG

PROJECT: Old Champlain Mill	PROJECT #: 06.6448	PAGE 4 OF 4
CLIENT:Gary Bowitch		DATE
LOCATION: Village of Whitehall, NY		COLLECTED: 05/16/07
INSTRUMENT USED: MiniRAE 2000	LAMP 10.6 EV	DATE
DATE INSTRUMENT CALIBRATED: 05/18/07	BY: DA	ANALYZED: 05/18/07
TEMPERATURE OF SOIL: Ambient		ANALYST: DA

EXPLORATION NUMBER	SAMPLE NUMBER	DEPTH (FT.)	SAMPLE TYPE	SAMPLE READING (PPM)**	BACKGROUND READING (PPM)**	REMARKS
MW-4A	1	(0-2)	Soil	3.0	0.5	No odors/No staining
	1	(2-4)	Soil	5.1	0.5	No odors/No staining
	2	(4-6)	Soil	3.2	1.0	No odors/No staining
	2	(6-8)	Soil	3.5	1.0	No odors/No staining
	3	(8-10)	Soil	1.6	0.9	No odors/No staining
	3	(10-12)	Soil	2.7	0.9	No odors/No staining
	4	(12-14)	Soil	2.9	1.0	No odors/No staining
	4	(14-16)	Soil	2.2	1.2	No odors/No staining
	5	(16-18)	Soil	3.0	1.1	No odors/No staining
	5	(18-20)	Soil	2.7	1.5	No odors/No staining

*Instrument was calibrated in accordance with manufacturer's recommended procedure using a calibration gas supplied by the manufacturer.
**PPM represents concentration of detectable volatile and gaseous compounds in parts per million of air.
***Due to poor sample recovery the sample is not sufficient enough to specify which portion of the recovered sample interval was collected .

ORGANIC VAPOR HEADSPACE ANALYSIS LOG

PROJECT: Old Champlain Mill	PROJECT #: 06.6448	PAGE 1 OF 2
CLIENT:Gary Bowitch		DATE
LOCATION: Village of Whitehall, NY		COLLECTED: 05/17/07
INSTRUMENT USED: MiniRAE 2000	LAMP 10.6 EV	DATE
DATE INSTRUMENT CALIBRATED: 05/18/07	BY: DA	ANALYZED: 05/18/07
TEMPERATURE OF SOIL: Ambient		ANALYST: DA

EXPLORATION NUMBER	SAMPLE NUMBER	DEPTH (FT.)	SAMPLE TYPE	SAMPLE READING (PPM)**	BACKGROUND READING (PPM)**	REMARKS
MW-7A	1	(0-2)	Soil	3.9	0.6	No odors/No staining
	1	(2-4)	Soil	2.4	1.1	No odors/No staining
	2	(4-6)	Soil	2.3	1.2	No odors/No staining
	2	(6-8)	Soil	4.1	0.9	No odors/No staining
	3	(8-12)	Soil	2.0	0.9	No odors/No staining
	4	(12-14)	Soil	2.8	1.0	No odors/No staining
	4	(14-16)	Soil	11.5	1.1	No odors/No staining
	5	(16-20)	Soil	2.5	1.1	No odors/No staining
MW-8A	1	(0-4)	Soil	2.2	0.9	No odors/No staining
	2	(4-6)	Soil	2.3	1.0	No odors/No staining
	2	(6-8)	Soil	3.5	0.9	No odors/No staining
	3	(8-10)	Soil	2.2	1.0	No odors/No staining
	3	(10-12)	Soil	2.3	1.0	No odors/No staining
	4	(12-14)	Soil	2.0	1.0	No odors/No staining
	4	(14-16)	Soil	2.8	1.1	No odors/No staining
	5	(16-18)	Soil	2.2	1.2	No odors/No staining
	5	(18-20)	Soil	3.0	1.3	No odors/No staining

*Instrument was calibrated in accordance with manufacturer's recommended procedure using a calibration gas supplied by the manufacturer.
**PPM represents concentration of detectable volatile and gaseous compounds in parts per million of air.
***Due to poor sample recovery the sample is not sufficient enough to specify which portion of the recovered sample interval was collected .

ORGANIC VAPOR HEADSPACE ANALYSIS LOG

PROJECT: Old Champlain Mill	PROJECT #: 06.6448	PAGE 2 OF 2
CLIENT:Gary Bowitch		DATE
LOCATION: Village of Whitehall, NY		COLLECTED: 05/17/07
INSTRUMENT USED: MiniRAE 2000	LAMP 10.6 EV	DATE
DATE INSTRUMENT CALIBRATED: 05/18/07	BY: DA	ANALYZED: 05/18/07
TEMPERATURE OF SOIL: Ambient		ANALYST: DA

EXPLORATION NUMBER	SAMPLE NUMBER	DEPTH (FT.)	SAMPLE TYPE	SAMPLE READING (PPM)**	BACKGROUND READING (PPM)**	REMARKS
MW-9A	1	(0-2)	Soil	1.9	0.9	No odors/No staining
	1	(2-4)	Soil	3.9	0.8	No odors/No staining
	2	(4-6)	Soil	4.1	1.1	No odors/No staining
	2	(6-8)	Soil	2.5	1.1	No odors/No staining
	3	(8-10)	Soil	4.6	1.0	No odors/No staining
	3	(10-12)	Soil	2.4	1.0	No odors/No staining
	4	(12-14)	Soil	2.8	1.0	No odors/No staining
	4	(14-16)	Soil	3.4	1.0	No odors/No staining
	5	(16-18)	Soil	1.9	1.4	No odors/No staining
	5	(18-20)	Soil	3.4	1.0	No odors/No staining
MW-10A	1	(0-2)	Soil	3.5	1.1	No odors/No staining
	1	(2-4)	Soil	5.2	1.1	No odors/No staining
	2	(4-6)	Soil	3.5	1.1	No odors/No staining
	2	(6-8)	Soil	7.5	1.4	No odors/No staining
	3	(8-10)	Soil	7.0	1.5	No odors/No staining
	3	(10-12)	Soil	16.9	1.5	No odors/No staining
	4	(12-14)	Soil	5.3	1.5	No odors/No staining
	4	(14-16)	Soil	7.6	1.6	No odors/No staining
	5	(16-18)	Soil	3.2	1.1	No odors/No staining
	5	(18-20)	Soil	9.6	1.5	No odors/No staining

*Instrument was calibrated in accordance with manufacturer's recommended procedure using a calibration gas supplied by the manufacturer.
**PPM represents concentration of detectable volatile and gaseous compounds in parts per million of air.
***Due to poor sample recovery the sample is not sufficient enough to specify which portion of the recovered sample interval was collected .

APPENDIX D

Laboratory Analysis Report for Surface Soils

PHOENIX
Environmental Laboratories, Inc.

RECEIVED
MAY 29 2007

Thursday, May 24, 2007

Attn: Ms.Aimee Gates
CT Male Associates, PC
50 Century Hill Drive
Latham, NY 12110

Client ID: OLD CHAMPLAIN MILL
Sample ID#s: AJ15447 - AJ15451

This laboratory is in compliance with the QA/QC procedure outlined in EPA 600/4-79-019, Handbook for Analytical Quality in Water and Waste Water, March 1979, and SW846 QA/QC requirements of procedures used.

If you have any questions concerning this testing, please do not hesitate to contact Phoenix Client Services at ext. 200.

Sincerely yours,

Phyllis Shiller

Phyllis Shiller
Laboratory Director

CT Lab Registration #PH-0618
MA Lab Registration #MA-CT-007
NY Lab Registration #11301
RI Lab Registration #63
NH Lab Registration #213693-A,B
ME Lab Registration #CT-007
NJ Lab Registration #CT-003
PA Lab Registration #68-03530

587 East Middle Turnpike, P.O. Box 370, Manchester, CT 06040
Telephone (860) 645-1102 ▪ Fax (860) 645-0823

PHOENIX

Environmental Laboratories, Inc.
587 East Middle Turnpike, P.O.Box 370, Manchester, CT 06040
Tel. (860) 645-1102 Fax (860) 645-0823

ACCREDITED IN ACCORDANCE WITH nelac

Analysis Report

May 24, 2007

FOR: Attn: Ms.Aimee Gates
CT Male Associates, PC
50 Century Hill Drive
Latham, NY 12110

Sample Information		Custody Information		Date	Time
Matrix:	SOIL	Collected by:	DA	05/17/07	13:30
Location Code:	CT-MALE	Received by:	LP	05/21/07	10:23
Rush Request:		Analyzed by:	see "By" below		
P.O.#:	06.6448				

SDG I.D.: GAJ15447
Phoenix I.D.: AJ15447

Laboratory Data

Client ID: OLD CHAMPLAIN MILL SS-1

Parameter	Result	RL	Units	Date	Time	By	Reference
Percent Solid	81		%	05/21/07		C\U\A	E160.3
Soil Ext. Semi-Vol BN	Completed			05/21/07		CU/E	SW3545
Semivolatiles							
1,2-Dichlorobenzene	ND	410	ug/Kg	05/22/07		HM	SW8270
1,2-Diphenylhydrazine	ND	410	ug/Kg	05/22/07		HM	SW8270
1,3-Dichlorobenzene	ND	410	ug/Kg	05/22/07		HM	SW8270
1,4-Dichlorobenzene	ND	410	ug/Kg	05/22/07		HM	SW8270
2,4-Dinitrotoluene	ND	410	ug/Kg	05/22/07		HM	SW8270
2,6-Dinitrotoluene	ND	410	ug/Kg	05/22/07		HM	SW8270
2-Chloronaphthalene	ND	410	ug/Kg	05/22/07		HM	SW8270
2-Methylnaphthalene	1400	410	ug/Kg	05/22/07		HM	SW8270
2-Nitroaniline	ND	1200	ug/Kg	05/22/07		HM	SW8270
3,3'-Dichlorobenzidine	ND	410	ug/Kg	05/22/07		HM	SW8270
3-Nitroaniline	ND	1200	ug/Kg	05/22/07		HM	SW8270
4-Bromophenyl phenyl ether	ND	410	ug/Kg	05/22/07		HM	SW8270
4-Chloroaniline	ND	410	ug/Kg	05/22/07		HM	SW8270
4-Chlorophenyl phenyl ether	ND	410	ug/Kg	05/22/07		HM	SW8270
4-Nitroaniline	ND	1200	ug/Kg	05/22/07		HM	SW8270
Acenaphthene	4600	410	ug/Kg	05/22/07		HM	SW8270
Acenaphthylene	ND	410	ug/Kg	05/22/07		HM	SW8270
Anthracene	10000	4100	ug/Kg	05/22/07		HM	SW8270
Benz(a)anthracene	20000	4100	ug/Kg	05/22/07		HM	SW8270
Benzidine	ND	410	ug/Kg	05/22/07		HM	SW8270
Benzo(a)pyrene	16000	4100	ug/Kg	05/22/07		HM	SW8270
Benzo(b)fluoranthene	19000	4100	ug/Kg	05/22/07		HM	SW8270

Client ID: OLD CHAMPLAIN MILL SS-1 **Phoenix I.D.: AJ15447**

Parameter	Result	RL	Units	Date	Time	By	Reference
Benzo(ghi)perylene	9900	4100	ug/Kg	05/22/07		HM	SW8270
Benzo(k)fluoranthene	9800	4100	ug/Kg	05/22/07		HM	SW8270
Benzoic acid	ND	1200	ug/Kg	05/22/07		HM	SW8270
Benzyl alcohol	ND	490	ug/Kg	05/22/07		HM	SW8270
Benzyl butyl phthalate	ND	410	ug/Kg	05/22/07		HM	SW8270
Bis(2-chloroethoxy)methane	ND	410	ug/Kg	05/22/07		HM	SW8270
Bis(2-chloroethyl)ether	ND	410	ug/Kg	05/22/07		HM	SW8270
Bis(2-chloroisopropyl)ether	ND	410	ug/Kg	05/22/07		HM	SW8270
Bis(2-ethylhexyl)phthalate	ND	410	ug/Kg	05/22/07		HM	SW8270
Chrysene	18000	4100	ug/Kg	05/22/07		HM	SW8270
Di-n-butylphthalate	ND	410	ug/Kg	05/22/07		HM	SW8270
Di-n-octylphthalate	ND	410	ug/Kg	05/22/07		HM	SW8270
Dibenz(a,h)anthracene	2500	410	ug/Kg	05/22/07		HM	SW8270
Dibenzofuran	ND	410	ug/Kg	05/22/07		HM	SW8270
Diethyl phthalate	ND	410	ug/Kg	05/22/07		HM	SW8270
Dimethylphthalate	ND	410	ug/Kg	05/22/07		HM	SW8270
Fluoranthene	46000	4100	ug/Kg	05/22/07		HM	SW8270
Fluorene	5200	410	ug/Kg	05/22/07		HM	SW8270
Hexachlorobenzene	ND	410	ug/Kg	05/22/07		HM	SW8270
Hexachlorobutadiene	ND	410	ug/Kg	05/22/07		HM	SW8270
Hexachlorocyclopentadiene	ND	410	ug/Kg	05/22/07		HM	SW8270
Hexachloroethane	ND	410	ug/Kg	05/22/07		HM	SW8270
Indeno(1,2,3-cd)pyrene	9400	4100	ug/Kg	05/22/07		HM	SW8270
Isophorone	ND	410	ug/Kg	05/22/07		HM	SW8270
N-Nitrosodi-n-propylamine	ND	410	ug/Kg	05/22/07		HM	SW8270
N-Nitrosodimethylamine	ND	410	ug/Kg	05/22/07		HM	SW8270
N-Nitrosodiphenylamine	ND	410	ug/Kg	05/22/07		HM	SW8270
Naphthalene	6000	410	ug/Kg	05/22/07		HM	SW8270
Nitrobenzene	ND	410	ug/Kg	05/22/07		HM	SW8270
Phenanthrene	38000	4100	ug/Kg	05/22/07		HM	SW8270
Pyrene	35000	4100	ug/Kg	05/22/07		HM	SW8270
QA/QC Surrogates							
% 2-Fluorobiphenyl	89		%	05/22/07		HM	SW8270
% Nitrobenzene-d5	87		%	05/22/07		HM	SW8270
% Terphenyl-d14	75		%	05/22/07		HM	SW8270

Comments:

If there are any questions regarding this data, please call Phoenix Client Services at extension 200.

ND=Not detected BDL=Below Detection Limit RL=Reporting Limit

Phyllis Shiller

Phyllis Shiller, Laboratory Director
May 24, 2007

PHOENIX

Environmental Laboratories, Inc.
587 East Middle Turnpike, P.O.Box 370, Manchester, CT 06040
Tel. (860) 645-1102 Fax (860) 645-0823

Analysis Report

May 24, 2007

FOR: Attn: Ms.Aimee Gates
CT Male Associates, PC
50 Century Hill Drive
Latham, NY 12110

Sample Information		Custody Information		Date	Time
Matrix:	SOIL	Collected by:	DA	05/17/07	13:40
Location Code:	CT-MALE	Received by:	LP	05/21/07	10:23
Rush Request:		Analyzed by:	see "By" below		
P.O.#:	06.6448				

SDG I.D.: GAJ15447
Phoenix I.D.: AJ15448

Laboratory Data

Client ID: OLD CHAMPLAIN MILL SS-2

Parameter	Result	RL	Units	Date	Time	By	Reference
Percent Solid	86		%	05/21/07		C\U\A	E160.3
Soil Ext. Semi-Vol BN	Completed			05/21/07		CU/E	SW3545
Semivolatiles							
1,2-Dichlorobenzene	ND	380	ug/Kg	05/22/07		HM	SW8270
1,2-Diphenylhydrazine	ND	380	ug/Kg	05/22/07		HM	SW8270
1,3-Dichlorobenzene	ND	380	ug/Kg	05/22/07		HM	SW8270
1,4-Dichlorobenzene	ND	380	ug/Kg	05/22/07		HM	SW8270
2,4-Dinitrotoluene	ND	380	ug/Kg	05/22/07		HM	SW8270
2,6-Dinitrotoluene	ND	380	ug/Kg	05/22/07		HM	SW8270
2-Chloronaphthalene	ND	380	ug/Kg	05/22/07		HM	SW8270
2-Methylnaphthalene	ND	380	ug/Kg	05/22/07		HM	SW8270
2-Nitroaniline	ND	1100	ug/Kg	05/22/07		HM	SW8270
3,3'-Dichlorobenzidine	ND	380	ug/Kg	05/22/07		HM	SW8270
3-Nitroaniline	ND	1100	ug/Kg	05/22/07		HM	SW8270
4-Bromophenyl phenyl ether	ND	380	ug/Kg	05/22/07		HM	SW8270
4-Chloroaniline	ND	380	ug/Kg	05/22/07		HM	SW8270
4-Chlorophenyl phenyl ether	ND	380	ug/Kg	05/22/07		HM	SW8270
4-Nitroaniline	ND	1100	ug/Kg	05/22/07		HM	SW8270
Acenaphthene	ND	380	ug/Kg	05/22/07		HM	SW8270
Acenaphthylene	ND	380	ug/Kg	05/22/07		HM	SW8270
Anthracene	ND	380	ug/Kg	05/22/07		HM	SW8270
Benz(a)anthracene	610	380	ug/Kg	05/22/07		HM	SW8270
Benzidine	ND	380	ug/Kg	05/22/07		HM	SW8270
Benzo(a)pyrene	840	380	ug/Kg	05/22/07		HM	SW8270
Benzo(b)fluoranthene	1000	380	ug/Kg	05/22/07		HM	SW8270

Client ID: OLD CHAMPLAIN MILL SS-2 Phoenix I.D.: AJ15448

Parameter	Result	RL	Units	Date	Time	By	Reference
Benzo(ghi)perylene	560	380	ug/Kg	05/22/07		HM	SW8270
Benzo(k)fluoranthene	ND	380	ug/Kg	05/22/07		HM	SW8270
Benzoic acid	ND	1100	ug/Kg	05/22/07		HM	SW8270
Benzyl alcohol	ND	460	ug/Kg	05/22/07		HM	SW8270
Benzyl butyl phthalate	ND	380	ug/Kg	05/22/07		HM	SW8270
Bis(2-chloroethoxy)methane	ND	380	ug/Kg	05/22/07		HM	SW8270
Bis(2-chloroethyl)ether	ND	380	ug/Kg	05/22/07		HM	SW8270
Bis(2-chloroisopropyl)ether	ND	380	ug/Kg	05/22/07		HM	SW8270
Bis(2-ethylhexyl)phthalate	ND	380	ug/Kg	05/22/07		HM	SW8270
Chrysene	600	380	ug/Kg	05/22/07		HM	SW8270
Di-n-butylphthalate	ND	380	ug/Kg	05/22/07		HM	SW8270
Di-n-octylphthalate	ND	380	ug/Kg	05/22/07		HM	SW8270
Dibenz(a,h)anthracene	ND	380	ug/Kg	05/22/07		HM	SW8270
Dibenzofuran	ND	380	ug/Kg	05/22/07		HM	SW8270
Diethyl phthalate	ND	380	ug/Kg	05/22/07		HM	SW8270
Dimethylphthalate	ND	380	ug/Kg	05/22/07		HM	SW8270
Fluoranthene	1100	380	ug/Kg	05/22/07		HM	SW8270
Fluorene	ND	380	ug/Kg	05/22/07		HM	SW8270
Hexachlorobenzene	ND	380	ug/Kg	05/22/07		HM	SW8270
Hexachlorobutadiene	ND	380	ug/Kg	05/22/07		HM	SW8270
Hexachlorocyclopentadiene	ND	380	ug/Kg	05/22/07		HM	SW8270
Hexachloroethane	ND	380	ug/Kg	05/22/07		HM	SW8270
Indeno(1,2,3-cd)pyrene	540	380	ug/Kg	05/22/07		HM	SW8270
Isophorone	ND	380	ug/Kg	05/22/07		HM	SW8270
N-Nitrosodi-n-propylamine	ND	380	ug/Kg	05/22/07		HM	SW8270
N-Nitrosodimethylamine	ND	380	ug/Kg	05/22/07		HM	SW8270
N-Nitrosodiphenylamine	ND	380	ug/Kg	05/22/07		HM	SW8270
Naphthalene	ND	380	ug/Kg	05/22/07		HM	SW8270
Nitrobenzene	ND	380	ug/Kg	05/22/07		HM	SW8270
Phenanthrene	950	380	ug/Kg	05/22/07		HM	SW8270
Pyrene	890	380	ug/Kg	05/22/07		HM	SW8270
QA/QC Surrogates							
% 2-Fluorobiphenyl	71		%	05/22/07		HM	SW8270
% Nitrobenzene-d5	60		%	05/22/07		HM	SW8270
% Terphenyl-d14	56		%	05/22/07		HM	SW8270

Comments:

If there are any questions regarding this data, please call Phoenix Client Services at extension 200.

ND=Not detected BDL=Below Detection Limit RL=Reporting Limit

Phyllis Shiller

Phyllis Shiller, Laboratory Director
May 24, 2007

PHOENIX

Environmental Laboratories, Inc.
587 East Middle Turnpike, P.O.Box 370, Manchester, CT 06040
Tel. (860) 645-1102 Fax (860) 645-0823

ACCREDITED IN ACCORDANCE WITH nelac

Analysis Report

May 24, 2007

FOR: Attn: Ms.Aimee Gates
CT Male Associates, PC
50 Century Hill Drive
Latham, NY 12110

Sample Information		Custody Information		Date	Time
Matrix:	SOIL	Collected by:	DA	05/17/07	13:50
Location Code:	CT-MALE	Received by:	LP	05/21/07	10:23
Rush Request:		Analyzed by:	see "By" below		
P.O.#:	06.6448				

SDG I.D.: GAJ15447
Phoenix I.D.: AJ15449

Laboratory Data

Client ID: OLD CHAMPLAIN MILL SS-3

Parameter	Result	RL	Units	Date	Time	By	Reference
Percent Solid	73		%	05/21/07		C\U\A	E160.3
Soil Ext. Semi-Vol BN	Completed			05/21/07		CU/E	SW3545
Semivolatiles							
1,2-Dichlorobenzene	ND	460	ug/Kg	05/22/07		HM	SW8270
1,2-Diphenylhydrazine	ND	460	ug/Kg	05/22/07		HM	SW8270
1,3-Dichlorobenzene	ND	460	ug/Kg	05/22/07		HM	SW8270
1,4-Dichlorobenzene	ND	460	ug/Kg	05/22/07		HM	SW8270
2,4-Dinitrotoluene	ND	460	ug/Kg	05/22/07		HM	SW8270
2,6-Dinitrotoluene	ND	460	ug/Kg	05/22/07		HM	SW8270
2-Chloronaphthalene	ND	460	ug/Kg	05/22/07		HM	SW8270
2-Methylnaphthalene	ND	460	ug/Kg	05/22/07		HM	SW8270
2-Nitroaniline	ND	1300	ug/Kg	05/22/07		HM	SW8270
3,3'-Dichlorobenzidine	ND	460	ug/Kg	05/22/07		HM	SW8270
3-Nitroaniline	ND	1300	ug/Kg	05/22/07		HM	SW8270
4-Bromophenyl phenyl ether	ND	460	ug/Kg	05/22/07		HM	SW8270
4-Chloroaniline	ND	460	ug/Kg	05/22/07		HM	SW8270
4-Chlorophenyl phenyl ether	ND	460	ug/Kg	05/22/07		HM	SW8270
4-Nitroaniline	ND	1300	ug/Kg	05/22/07		HM	SW8270
Acenaphthene	ND	460	ug/Kg	05/22/07		HM	SW8270
Acenaphthylene	ND	460	ug/Kg	05/22/07		HM	SW8270
Anthracene	ND	460	ug/Kg	05/22/07		HM	SW8270
Benz(a)anthracene	1900	460	ug/Kg	05/22/07		HM	SW8270
Benzidine	ND	460	ug/Kg	05/22/07		HM	SW8270
Benzo(a)pyrene	2000	460	ug/Kg	05/22/07		HM	SW8270
Benzo(b)fluoranthene	2400	460	ug/Kg	05/22/07		HM	SW8270

Client ID: OLD CHAMPLAIN MILL SS-3 Phoenix I.D.: AJ15449

Parameter	Result	RL	Units	Date	Time	By	Reference
Benzo(ghi)perylene	1200	460	ug/Kg	05/22/07		HM	SW8270
Benzo(k)fluoranthene	960	460	ug/Kg	05/22/07		HM	SW8270
Benzoic acid	ND	1300	ug/Kg	05/22/07		HM	SW8270
Benzyl alcohol	ND	550	ug/Kg	05/22/07		HM	SW8270
Benzyl butyl phthalate	ND	460	ug/Kg	05/22/07		HM	SW8270
Bis(2-chloroethoxy)methane	ND	460	ug/Kg	05/22/07		HM	SW8270
Bis(2-chloroethyl)ether	ND	460	ug/Kg	05/22/07		HM	SW8270
Bis(2-chloroisopropyl)ether	ND	460	ug/Kg	05/22/07		HM	SW8270
Bis(2-ethylhexyl)phthalate	ND	460	ug/Kg	05/22/07		HM	SW8270
Chrysene	1900	460	ug/Kg	05/22/07		HM	SW8270
Di-n-butylphthalate	ND	460	ug/Kg	05/22/07		HM	SW8270
Di-n-octylphthalate	ND	460	ug/Kg	05/22/07		HM	SW8270
Dibenz(a,h)anthracene	ND	460	ug/Kg	05/22/07		HM	SW8270
Dibenzofuran	ND	460	ug/Kg	05/22/07		HM	SW8270
Diethyl phthalate	ND	460	ug/Kg	05/22/07		HM	SW8270
Dimethylphthalate	ND	460	ug/Kg	05/22/07		HM	SW8270
Fluoranthene	2900	460	ug/Kg	05/22/07		HM	SW8270
Fluorene	ND	460	ug/Kg	05/22/07		HM	SW8270
Hexachlorobenzene	ND	460	ug/Kg	05/22/07		HM	SW8270
Hexachlorobutadiene	ND	460	ug/Kg	05/22/07		HM	SW8270
Hexachlorocyclopentadiene	ND	460	ug/Kg	05/22/07		HM	SW8270
Hexachloroethane	ND	460	ug/Kg	05/22/07		HM	SW8270
Indeno(1,2,3-cd)pyrene	1200	460	ug/Kg	05/22/07		HM	SW8270
Isophorone	ND	460	ug/Kg	05/22/07		HM	SW8270
N-Nitrosodi-n-propylamine	ND	460	ug/Kg	05/22/07		HM	SW8270
N-Nitrosodimethylamine	ND	460	ug/Kg	05/22/07		HM	SW8270
N-Nitrosodiphenylamine	ND	460	ug/Kg	05/22/07		HM	SW8270
Naphthalene	ND	460	ug/Kg	05/22/07		HM	SW8270
Nitrobenzene	ND	460	ug/Kg	05/22/07		HM	SW8270
Phenanthrene	1500	460	ug/Kg	05/22/07		HM	SW8270
Pyrene	2400	460	ug/Kg	05/22/07		HM	SW8270
QA/QC Surrogates							
% 2-Fluorobiphenyl	87		%	05/22/07		HM	SW8270
% Nitrobenzene-d5	75		%	05/22/07		HM	SW8270
% Terphenyl-d14	76		%	05/22/07		HM	SW8270

Comments:

If there are any questions regarding this data, please call Phoenix Client Services at extension 200.

ND=Not detected BDL=Below Detection Limit RL=Reporting Limit

Phyllis Shiller, Laboratory Director
May 24, 2007

PHOENIX

Environmental Laboratories, Inc.
587 East Middle Turnpike, P.O.Box 370, Manchester, CT 06040
Tel. (860) 645-1102 Fax (860) 645-0823

ACCREDITED IN ACCORDANCE WITH nelac

Analysis Report

May 24, 2007

FOR: Attn: Ms.Aimee Gates
CT Male Associates, PC
50 Century Hill Drive
Latham, NY 12110

Sample Information		Custody Information		Date	Time
Matrix:	SOIL	Collected by:	DA	05/17/07	14:00
Location Code:	CT-MALE	Received by:	LP	05/21/07	10:23
Rush Request:		Analyzed by:	see "By" below		
P.O.#:	06.6448				

SDG I.D.: GAJ15447
Phoenix I.D.: AJ15450

Laboratory Data

Client ID: OLD CHAMPLAIN MILL SS-4

Parameter	Result	RL	Units	Date	Time	By	Reference
Percent Solid	79		%	05/21/07		C\U\A	E160.3
Soil Ext. Semi-Vol BN	Completed			05/21/07		CU/E	SW3545
Semivolatiles							
1,2-Dichlorobenzene	ND	420	ug/Kg	05/22/07		HM	SW8270
1,2-Diphenylhydrazine	ND	420	ug/Kg	05/22/07		HM	SW8270
1,3-Dichlorobenzene	ND	420	ug/Kg	05/22/07		HM	SW8270
1,4-Dichlorobenzene	ND	420	ug/Kg	05/22/07		HM	SW8270
2,4-Dinitrotoluene	ND	420	ug/Kg	05/22/07		HM	SW8270
2,6-Dinitrotoluene	ND	420	ug/Kg	05/22/07		HM	SW8270
2-Chloronaphthalene	ND	420	ug/Kg	05/22/07		HM	SW8270
2-Methylnaphthalene	750	420	ug/Kg	05/22/07		HM	SW8270
2-Nitroaniline	ND	1200	ug/Kg	05/22/07		HM	SW8270
3,3'-Dichlorobenzidine	ND	420	ug/Kg	05/22/07		HM	SW8270
3-Nitroaniline	ND	1200	ug/Kg	05/22/07		HM	SW8270
4-Bromophenyl phenyl ether	ND	420	ug/Kg	05/22/07		HM	SW8270
4-Chloroaniline	ND	420	ug/Kg	05/22/07		HM	SW8270
4-Chlorophenyl phenyl ether	ND	420	ug/Kg	05/22/07		HM	SW8270
4-Nitroaniline	ND	1200	ug/Kg	05/22/07		HM	SW8270
Acenaphthene	ND	420	ug/Kg	05/22/07		HM	SW8270
Acenaphthylene	ND	420	ug/Kg	05/22/07		HM	SW8270
Anthracene	ND	420	ug/Kg	05/22/07		HM	SW8270
Benz(a)anthracene	830	420	ug/Kg	05/22/07		HM	SW8270
Benzidine	ND	420	ug/Kg	05/22/07		HM	SW8270
Benzo(a)pyrene	820	420	ug/Kg	05/22/07		HM	SW8270
Benzo(b)fluoranthene	1100	420	ug/Kg	05/22/07		HM	SW8270

Client ID: OLD CHAMPLAIN MILL SS-4 Phoenix I.D.: AJ15450

Parameter	Result	RL	Units	Date	Time	By	Reference
Benzo(ghi)perylene	570	420	ug/Kg	05/22/07		HM	SW8270
Benzo(k)fluoranthene	440	420	ug/Kg	05/22/07		HM	SW8270
Benzoic acid	ND	1200	ug/Kg	05/22/07		HM	SW8270
Benzyl alcohol	ND	500	ug/Kg	05/22/07		HM	SW8270
Benzyl butyl phthalate	ND	420	ug/Kg	05/22/07		HM	SW8270
Bis(2-chloroethoxy)methane	ND	420	ug/Kg	05/22/07		HM	SW8270
Bis(2-chloroethyl)ether	ND	420	ug/Kg	05/22/07		HM	SW8270
Bis(2-chloroisopropyl)ether	ND	420	ug/Kg	05/22/07		HM	SW8270
Bis(2-ethylhexyl)phthalate	ND	420	ug/Kg	05/22/07		HM	SW8270
Chrysene	840	420	ug/Kg	05/22/07		HM	SW8270
Di-n-butylphthalate	ND	420	ug/Kg	05/22/07		HM	SW8270
Di-n-octylphthalate	ND	420	ug/Kg	05/22/07		HM	SW8270
Dibenz(a,h)anthracene	ND	420	ug/Kg	05/22/07		HM	SW8270
Dibenzofuran	ND	420	ug/Kg	05/22/07		HM	SW8270
Diethyl phthalate	ND	420	ug/Kg	05/22/07		HM	SW8270
Dimethylphthalate	ND	420	ug/Kg	05/22/07		HM	SW8270
Fluoranthene	1400	420	ug/Kg	05/22/07		HM	SW8270
Fluorene	ND	420	ug/Kg	05/22/07		HM	SW8270
Hexachlorobenzene	ND	420	ug/Kg	05/22/07		HM	SW8270
Hexachlorobutadiene	ND	420	ug/Kg	05/22/07		HM	SW8270
Hexachlorocyclopentadiene	ND	420	ug/Kg	05/22/07		HM	SW8270
Hexachloroethane	ND	420	ug/Kg	05/22/07		HM	SW8270
Indeno(1,2,3-cd)pyrene	530	420	ug/Kg	05/22/07		HM	SW8270
Isophorone	ND	420	ug/Kg	05/22/07		HM	SW8270
N-Nitrosodi-n-propylamine	ND	420	ug/Kg	05/22/07		HM	SW8270
N-Nitrosodimethylamine	ND	420	ug/Kg	05/22/07		HM	SW8270
N-Nitrosodiphenylamine	ND	420	ug/Kg	05/22/07		HM	SW8270
Naphthalene	610	420	ug/Kg	05/22/07		HM	SW8270
Nitrobenzene	ND	420	ug/Kg	05/22/07		HM	SW8270
Phenanthrene	1200	420	ug/Kg	05/22/07		HM	SW8270
Pyrene	1200	420	ug/Kg	05/22/07		HM	SW8270
QA/QC Surrogates							
% 2-Fluorobiphenyl	90		%	05/22/07		HM	SW8270
% Nitrobenzene-d5	79		%	05/22/07		HM	SW8270
% Terphenyl-d14	80		%	05/22/07		HM	SW8270

Comments:

If there are any questions regarding this data, please call Phoenix Client Services at extension 200.

ND=Not detected BDL=Below Detection Limit RL=Reporting Limit

Phyllis Shiller, Laboratory Director
May 24, 2007

PHOENIX

Environmental Laboratories, Inc.
587 East Middle Turnpike, P.O.Box 370, Manchester, CT 06040
Tel. (860) 645-1102 Fax (860) 645-0823

ACCREDITED IN ACCORDANCE WITH nelac

Analysis Report

May 24, 2007

FOR: Attn: Ms.Aimee Gates
CT Male Associates, PC
50 Century Hill Drive
Latham, NY 12110

Sample Information		Custody Information		Date	Time
Matrix:	SOIL	Collected by:	DA	05/17/07	14:10
Location Code:	CT-MALE	Received by:	LP	05/21/07	10:23
Rush Request:		Analyzed by:	see "By" below		
P.O.#:	06.6448				

SDG I.D.: GAJ15447
Phoenix I.D.: AJ15451

Laboratory Data

Client ID: OLD CHAMPLAIN MILL SS-5

Parameter	Result	RL	Units	Date	Time	By	Reference
Percent Solid	84		%	05/21/07		C\U\A	E160.3
Soil Ext. Semi-Vol BN	Completed			05/21/07		CU/E	SW3545
Semivolatiles							
1,2-Dichlorobenzene	ND	390	ug/Kg	05/22/07		HM	SW8270
1,2-Diphenylhydrazine	ND	390	ug/Kg	05/22/07		HM	SW8270
1,3-Dichlorobenzene	ND	390	ug/Kg	05/22/07		HM	SW8270
1,4-Dichlorobenzene	ND	390	ug/Kg	05/22/07		HM	SW8270
2,4-Dinitrotoluene	ND	390	ug/Kg	05/22/07		HM	SW8270
2,6-Dinitrotoluene	ND	390	ug/Kg	05/22/07		HM	SW8270
2-Chloronaphthalene	ND	390	ug/Kg	05/22/07		HM	SW8270
2-Methylnaphthalene	1000	390	ug/Kg	05/22/07		HM	SW8270
2-Nitroaniline	ND	1100	ug/Kg	05/22/07		HM	SW8270
3,3'-Dichlorobenzidine	ND	390	ug/Kg	05/22/07		HM	SW8270
3-Nitroaniline	ND	1100	ug/Kg	05/22/07		HM	SW8270
4-Bromophenyl phenyl ether	ND	390	ug/Kg	05/22/07		HM	SW8270
4-Chloroaniline	ND	390	ug/Kg	05/22/07		HM	SW8270
4-Chlorophenyl phenyl ether	ND	390	ug/Kg	05/22/07		HM	SW8270
4-Nitroaniline	ND	1100	ug/Kg	05/22/07		HM	SW8270
Acenaphthene	ND	390	ug/Kg	05/22/07		HM	SW8270
Acenaphthylene	ND	390	ug/Kg	05/22/07		HM	SW8270
Anthracene	ND	390	ug/Kg	05/22/07		HM	SW8270
Benz(a)anthracene	1300	390	ug/Kg	05/22/07		HM	SW8270
Benzidine	ND	390	ug/Kg	05/22/07		HM	SW8270
Benzo(a)pyrene	1200	390	ug/Kg	05/22/07		HM	SW8270
Benzo(b)fluoranthene	1600	390	ug/Kg	05/22/07		HM	SW8270

Client ID: OLD CHAMPLAIN MILL SS-5 Phoenix I.D.: AJ15451

Parameter	Result	RL	Units	Date	Time	By	Reference
Benzo(ghi)perylene	730	390	ug/Kg	05/22/07		HM	SW8270
Benzo(k)fluoranthene	670	390	ug/Kg	05/22/07		HM	SW8270
Benzoic acid	ND	1100	ug/Kg	05/22/07		HM	SW8270
Benzyl alcohol	ND	470	ug/Kg	05/22/07		HM	SW8270
Benzyl butyl phthalate	ND	390	ug/Kg	05/22/07		HM	SW8270
Bis(2-chloroethoxy)methane	ND	390	ug/Kg	05/22/07		HM	SW8270
Bis(2-chloroethyl)ether	ND	390	ug/Kg	05/22/07		HM	SW8270
Bis(2-chloroisopropyl)ether	ND	390	ug/Kg	05/22/07		HM	SW8270
Bis(2-ethylhexyl)phthalate	ND	390	ug/Kg	05/22/07		HM	SW8270
Chrysene	1200	390	ug/Kg	05/22/07		HM	SW8270
Di-n-butylphthalate	ND	390	ug/Kg	05/22/07		HM	SW8270
Di-n-octylphthalate	ND	390	ug/Kg	05/22/07		HM	SW8270
Dibenz(a,h)anthracene	ND	390	ug/Kg	05/22/07		HM	SW8270
Dibenzofuran	ND	390	ug/Kg	05/22/07		HM	SW8270
Diethyl phthalate	ND	390	ug/Kg	05/22/07		HM	SW8270
Dimethylphthalate	ND	390	ug/Kg	05/22/07		HM	SW8270
Fluoranthene	2000	390	ug/Kg	05/22/07		HM	SW8270
Fluorene	ND	390	ug/Kg	05/22/07		HM	SW8270
Hexachlorobenzene	ND	390	ug/Kg	05/22/07		HM	SW8270
Hexachlorobutadiene	ND	390	ug/Kg	05/22/07		HM	SW8270
Hexachlorocyclopentadiene	ND	390	ug/Kg	05/22/07		HM	SW8270
Hexachloroethane	ND	390	ug/Kg	05/22/07		HM	SW8270
Indeno(1,2,3-cd)pyrene	680	390	ug/Kg	05/22/07		HM	SW8270
Isophorone	ND	390	ug/Kg	05/22/07		HM	SW8270
N-Nitrosodi-n-propylamine	ND	390	ug/Kg	05/22/07		HM	SW8270
N-Nitrosodimethylamine	ND	390	ug/Kg	05/22/07		HM	SW8270
N-Nitrosodiphenylamine	ND	390	ug/Kg	05/22/07		HM	SW8270
Naphthalene	800	390	ug/Kg	05/22/07		HM	SW8270
Nitrobenzene	ND	390	ug/Kg	05/22/07		HM	SW8270
Phenanthrene	1800	390	ug/Kg	05/22/07		HM	SW8270
Pyrene	1700	390	ug/Kg	05/22/07		HM	SW8270
QA/QC Surrogates							
% 2-Fluorobiphenyl	89		%	05/22/07		HM	SW8270
% Nitrobenzene-d5	77		%	05/22/07		HM	SW8270
% Terphenyl-d14	76		%	05/22/07		HM	SW8270

Comments:

If there are any questions regarding this data, please call Phoenix Client Services at extension 200.

ND=Not detected BDL=Below Detection Limit RL=Reporting Limit

Phyllis Shiller, Laboratory Director
May 24, 2007

PHOENIX

Environmental Laboratories, Inc.
587 East Middle Turnpike, P.O.Box 370, Manchester, CT 06040
Tel. (860) 645-1102 Fax (860) 645-0823

ACCREDITED IN ACCORDANCE WITH nelac

QA/QC Report

May 24, 2007

QA/QC Data

SDG I.D.: GAJ15447

Parameter	Blank	LCS %	LCSD %	LCS RPD	MS Rec %	MS Dup Rec %	RPD
QA/QC Batch 76685, Sample No: AJ15400 (AJ15447, AJ15448, AJ15449, AJ15450, AJ15451)							
Polynuclear Aromatic HC							
2-Methylnaphthalene	ND	82	86	4.8	82	90	9.3
Acenaphthene	ND	85	91	6.8	88	94	6.6
Acenaphthylene	ND	85	91	6.8	88	94	6.6
Anthracene	ND	87	94	7.7	91	96	5.3
Benz(a)anthracene	ND	91	96	5.3	94	100	6.2
Benzo(a)pyrene	ND	91	96	5.3	93	100	7.3
Benzo(b)fluoranthene	ND	98	96	2.1	98	101	3.0
Benzo(ghi)perylene	ND	88	95	7.7	97	108	10.7
Benzo(k)fluoranthene	ND	89	100	11.6	94	101	7.2
Chrysene	ND	92	99	7.3	95	103	8.1
Dibenz(a,h)anthracene	ND	90	98	8.5	98	111	12.4
Fluoranthene	ND	91	97	6.4	94	100	6.2
Fluorene	ND	87	93	6.7	89	96	7.6
Indeno(1,2,3-cd)pyrene	ND	89	97	8.6	98	109	10.6
Naphthalene	ND	80	86	7.2	83	89	7.0
Phenanthrene	ND	88	95	7.7	92	97	5.3
Pyrene	ND	89	96	7.6	92	98	6.3
% 2-Fluorobiphenyl	82	79	83	4.9	81	85	4.8
% Nitrobenzene-d5	71	73	78	6.6	71	80	11.9
% Terphenyl-d14	85	85	90	5.7	85	91	6.8

If there are any questions regarding this data, please call Phoenix Client Services at extension 200.

RPD - Relative Percent Difference
LCS - Laboratory Control Sample
LCSD - Laboratory Control Sample Duplicate
MS - Matrix Spike
MS Dup - Matrix Spike Duplicate
NC - No Criteria

Phyllis Shiller, Laboratory Director
May 24, 2007

PHOENIX
Environmental Laboratories, Inc.

CHAIN OF CUSTODY RECORD

587 East Middle Turnpike, P.O. Box 370, Manchester, CT 06040
Email: service@phoenixlabs.com Fax (860) 645-0823
Client Services (860) 645-8726

Temp (17) of 1

Data Delivery (check one):
☐ Fax #: _____
☐ Email: _____
Format: ☐ Excel ☐ Pdf ☐ Gis Key

Customer: C.T. Male Associates, P.C.
Address: 50 Century Hill Dr Latham NY 12110

Project: Old Champlain Mill
Report to: Aimee Gates
Invoice to: Aimee Gates

Project P.O: 06G498
Phone #: 518 786 7900
Fax #: 518 786 7299

Client Sample - Information - Identification

Sampler's Signature: Don Athyl Date 5/18/07

Matrix Code:
DW=drinking water WW=wastewater S=soil/solid O=Oil
GW=groundwater SL=sludge A=air X=Other

Analysis Request

Item #	Phoenix Sample #	Customer Sample Identification	Sample Matrix	Date Sampled	Time Sampled	8270 B/N Sludge	Soil VOA Vial [ ] methanol [ ] Sod Bisulfate	GL Soil container (4) oz	GL Soil container ( ) oz	40 ml VOA Vial [ ] As is [ ] HCl	GL Amber 1000ml [ ] As is [ ] H2SO4	PL As is [ ] 250ml [ ] 500ml [ ] 1000ml	PL H2SO4 [ ] 250ml [ ] 500ml	PL HNO3 250ml	PL NaOH 250ml	Bacteria Bottle
	15447	SS-1	S	5/17/07	1330	X		1								
	15448	SS-2	S		1340	X		1								
	15449	SS-3	S		1350	X		1								
	15450	SS-4	S		1400	X		1								
	15451	SS-5	S	↓	1410	X		1								

Relinquished by:	Accepted by:	Date:	Time:
		5/18/07	1358
		5/21/07	1627

Comments, Special Requirements or Regulations:

Turnaround:
☐ 1 Day*
☐ 2 Days*
☐ 3 Days*
☒ Standard
☐ Other

* Surcharge Applies

Requirements for CT/RI
☐ Res. Criteria
☐ GW Protection
☐ GA Mobility
☐ GB Mobility
☐ SW Protection
☐ Res. Vol.
☐ Ind. Vol.
☐ RCP Certification

Requirements for MA
☐ GW-1
☐ GW-2
☐ GW-3
☐ S-1
☐ S-2
☐ S-3
☐ MCP Certification
☐ Other

APPENDIX E

Laboratory Analysis Report for Groundwater

RECEIVED
JUN 11 2007
C.T. MALE ASSOCIATES, P.C.

PHOENIX
Environmental Laboratories, Inc.

Friday, June 08, 2007

Attn: Ms. Aimee Gates
CT Male Associates, PC
50 Century Hill Drive
Latham, NY 12110

Client ID: OLD CHAMPLAIN MILL
Sample ID#s: AJ19140 - AJ19149

This laboratory is in compliance with the QA/QC procedure outlined in EPA 600/4-79-019, Handbook for Analytical Quality in Water and Waste Water, March 1979, and SW846 QA/QC requirements of procedures used.

If you have any questions concerning this testing, please do not hesitate to contact Phoenix Client Services at ext. 200.

Sincerely yours,

Phyllis Shiller

Phyllis Shiller
Laboratory Director

CT Lab Registration #PH-0618
MA Lab Registration #MA-CT-007
NY Lab Registration #11301
RI Lab Registration #63
NH Lab Registration #213693-A,B
ME Lab Registration #CT-007
NJ Lab Registration #CT-003
PA Lab Registration #68-03530

PHOENIX

Environmental Laboratories, Inc.
587 East Middle Turnpike, P.O.Box 370, Manchester, CT 06040
Tel. (860) 645-1102 Fax (860) 645-0823

ACCREDITED IN ACCORDANCE WITH nelac

Analysis Report

June 08, 2007

FOR: Attn: Ms. Aimee Gates
CT Male Associates, PC
50 Century Hill Drive
Latham, NY 12110

Sample Information		Custody Information		Date	Time
Matrix:	WATER	Collected by:	BB	05/31/07	10:10
Location Code:	CT-MALE	Received by:	LP	06/02/07	9:00
Rush Request:		Analyzed by:	see "By" below		
P.O.#:	066448				

SDG I.D.: GAJ19140
Phoenix I.D.: AJ19140

Laboratory Data

Client ID: OLD CHAMPLAIN MILL MW-10A

Parameter	Result	RL	Units	Date	Time	By	Reference
Volatiles							
1,1,1,2-Tetrachloroethane	ND	5	ug/L	06/05/07		R/J	SW8260
1,1,1-Trichloroethane	ND	5	ug/L	06/05/07		R/J	SW8260
1,1,2,2-Tetrachloroethane	ND	5	ug/L	06/05/07		R/J	SW8260
1,1,2-Trichloroethane	ND	5	ug/L	06/05/07		R/J	SW8260
1,1-Dichloroethane	ND	5	ug/L	06/05/07		R/J	SW8260
1,1-Dichloroethene	ND	5	ug/L	06/05/07		R/J	SW8260
1,1-Dichloropropene	ND	5	ug/L	06/05/07		R/J	SW8260
1,2,3-Trichlorobenzene	ND	5	ug/L	06/05/07		R/J	SW8260
1,2,3-Trichloropropane	ND	5	ug/L	06/05/07		R/J	SW8260
1,2,4-Trichlorobenzene	ND	5	ug/L	06/05/07		R/J	SW8260
1,2,4-Trimethylbenzene	ND	5	ug/L	06/05/07		R/J	SW8260
1,2-Dibromo-3-chloropropane	ND	5	ug/L	06/05/07		R/J	SW8260
1,2-Dichlorobenzene	ND	5	ug/L	06/05/07		R/J	SW8260
1,2-Dichloroethane	ND	5	ug/L	06/05/07		R/J	SW8260
1,2-Dichloropropane	ND	5	ug/L	06/05/07		R/J	SW8260
1,3,5-Trimethylbenzene	ND	5	ug/L	06/05/07		R/J	SW8260
1,3-Dichlorobenzene	ND	5	ug/L	06/05/07		R/J	SW8260
1,3-Dichloropropane	ND	5	ug/L	06/05/07		R/J	SW8260
1,4-Dichlorobenzene	ND	5	ug/L	06/05/07		R/J	SW8260
2,2-Dichloropropane	ND	5	ug/L	06/05/07		R/J	SW8260
2-Chlorotoluene	ND	5	ug/L	06/05/07		R/J	SW8260
2-Hexanone	ND	25	ug/L	06/05/07		R/J	SW8260
2-Isopropyltoluene	ND	5	ug/L	06/05/07		R/J	SW8260
4-Chlorotoluene	ND	5	ug/L	06/05/07		R/J	SW8260

Client ID: OLD CHAMPLAIN MILL MW-10A

Phoenix I.D.: AJ19140

Parameter	Result	RL	Units	Date	Time	By	Reference
4-Methyl-2-pentanone	ND	25	ug/L	06/05/07		R/J	SW8260
Acetone	ND	50	ug/L	06/05/07		R/J	SW8260
Acrylonitrile	ND	10	ug/L	06/05/07		R/J	SW8260
Benzene	ND	5	ug/L	06/05/07		R/J	SW8260
Bromobenzene	ND	5	ug/L	06/05/07		R/J	SW8260
Bromochloromethane	ND	5	ug/L	06/05/07		R/J	SW8260
Bromodichloromethane	ND	5	ug/L	06/05/07		R/J	SW8260
Bromoform	ND	5	ug/L	06/05/07		R/J	SW8260
Bromomethane	ND	5	ug/L	06/05/07		R/J	SW8260
Carbon Disulfide	ND	5	ug/L	06/05/07		R/J	SW8260
Carbon tetrachloride	ND	5	ug/L	06/05/07		R/J	SW8260
Chlorobenzene	ND	5	ug/L	06/05/07		R/J	SW8260
Chloroethane	ND	5	ug/L	06/05/07		R/J	SW8260
Chloroform	ND	5	ug/L	06/05/07		R/J	SW8260
Chloromethane	ND	5	ug/L	06/05/07		R/J	SW8260
cis-1,2-Dichloroethene	1300	100	ug/L	06/05/07		R/J	SW8260
cis-1,3-Dichloropropene	ND	5	ug/L	06/05/07		R/J	SW8260
Dibromochloromethane	ND	5	ug/L	06/05/07		R/J	SW8260
Dibromoethane	ND	5	ug/L	06/05/07		R/J	SW8260
Dibromomethane	ND	5	ug/L	06/05/07		R/J	SW8260
Dichlorodifluoromethane	ND	5	ug/L	06/05/07		R/J	SW8260
Ethylbenzene	ND	5	ug/L	06/05/07		R/J	SW8260
Hexachlorobutadiene	ND	5	ug/L	06/05/07		R/J	SW8260
Isopropylbenzene	ND	5	ug/L	06/05/07		R/J	SW8260
m&p-Xylene	ND	5	ug/L	06/05/07		R/J	SW8260
Methyl Ethyl Ketone	ND	60	ug/L	06/05/07		R/J	SW8260
Methyl t-butyl ether (MTBE)	ND	10	ug/L	06/05/07		R/J	SW8260
Methylene chloride	9.2	5	ug/L	06/05/07		R/J	SW8260
n-Butylbenzene	ND	5	ug/L	06/05/07		R/J	SW8260
n-Propylbenzene	ND	5	ug/L	06/05/07		R/J	SW8260
Naphthalene	ND	5	ug/L	06/05/07		R/J	SW8260
o-Xylene	ND	5	ug/L	06/05/07		R/J	SW8260
p-Isopropyltoluene	ND	5	ug/L	06/05/07		R/J	SW8260
sec-Butylbenzene	ND	5	ug/L	06/05/07		R/J	SW8260
Styrene	ND	5	ug/L	06/05/07		R/J	SW8260
tert-Butylbenzene	ND	5	ug/L	06/05/07		R/J	SW8260
Tetrachloroethene	ND	5	ug/L	06/05/07		R/J	SW8260
Tetrahydrofuran (THF)	ND	10	ug/L	06/05/07		R/J	SW8260
Toluene	ND	5	ug/L	06/05/07		R/J	SW8260
Total Xylenes	ND	5	ug/L	06/05/07		R/J	SW8260
trans-1,2-Dichloroethene	8.9	5	ug/L	06/05/07		R/J	SW8260
trans-1,3-Dichloropropene	ND	5	ug/L	06/05/07		R/J	SW8260
trans-1,4-dichloro-2-butene	ND	10	ug/L	06/05/07		R/J	SW8260
Trichloroethene	10	5	ug/L	06/05/07		R/J	SW8260
Trichlorofluoromethane	ND	5	ug/L	06/05/07		R/J	SW8260
Trichlorotrifluoroethane	ND	5	ug/L	06/05/07		R/J	SW8260

Client ID: OLD CHAMPLAIN MILL MW-10A Phoenix I.D.: AJ19140

Parameter	Result	RL	Units	Date	Time	By	Reference
Vinyl chloride	440	100	ug/L	06/05/07		R/J	SW8260
QA/QC Surrogates							
% 1,2-dichlorobenzene-d4	97		%	06/05/07		R/J	SW8260
% Bromofluorobenzene	90		%	06/05/07		R/J	SW8260
% Dibromofluoromethane	97		%	06/05/07		R/J	SW8260
% Toluene-d8	96		%	06/05/07		R/J	SW8260

Comments:

If there are any questions regarding this data, please call Phoenix Client Services at extension 200.
ND=Not detected BDL=Below Detection Limit RL=Reporting Limit

Phyllis Shiller, Laboratory Director
June 08, 2007

PHOENIX

ACCREDITED IN ACCORDANCE WITH nelac

Environmental Laboratories, Inc.
587 East Middle Turnpike, P.O.Box 370, Manchester, CT 06040
Tel. (860) 645-1102 Fax (860) 645-0823

Analysis Report

June 08, 2007

FOR: Attn: Ms. Aimee Gates
CT Male Associates, PC
50 Century Hill Drive
Latham, NY 12110

Sample Information		Custody Information		Date	Time
Matrix:	WATER	Collected by:	BB	05/31/07	11:00
Location Code:	CT-MALE	Received by:	LP	06/02/07	9:00
Rush Request:		Analyzed by:	see "By" below		
P.O.#:	066448				

SDG I.D.: GAJ19140
Phoenix I.D.: AJ19141

Laboratory Data

Client ID: OLD CHAMPLAIN MILL MW-1A

Parameter	Result	RL	Units	Date	Time	By	Reference
Volatiles							
1,1,1,2-Tetrachloroethane	ND	5	ug/L	06/06/07		R/J	SW8260
1,1,1-Trichloroethane	ND	5	ug/L	06/06/07		R/J	SW8260
1,1,2,2-Tetrachloroethane	ND	5	ug/L	06/06/07		R/J	SW8260
1,1,2-Trichloroethane	ND	5	ug/L	06/06/07		R/J	SW8260
1,1-Dichloroethane	ND	5	ug/L	06/06/07		R/J	SW8260
1,1-Dichloroethene	ND	5	ug/L	06/06/07		R/J	SW8260
1,1-Dichloropropene	ND	5	ug/L	06/06/07		R/J	SW8260
1,2,3-Trichlorobenzene	ND	5	ug/L	06/06/07		R/J	SW8260
1,2,3-Trichloropropane	ND	5	ug/L	06/06/07		R/J	SW8260
1,2,4-Trichlorobenzene	ND	5	ug/L	06/06/07		R/J	SW8260
1,2,4-Trimethylbenzene	ND	5	ug/L	06/06/07		R/J	SW8260
1,2-Dibromo-3-chloropropane	ND	5	ug/L	06/06/07		R/J	SW8260
1,2-Dichlorobenzene	ND	5	ug/L	06/06/07		R/J	SW8260
1,2-Dichloroethane	ND	5	ug/L	06/06/07		R/J	SW8260
1,2-Dichloropropane	ND	5	ug/L	06/06/07		R/J	SW8260
1,3,5-Trimethylbenzene	ND	5	ug/L	06/06/07		R/J	SW8260
1,3-Dichlorobenzene	ND	5	ug/L	06/06/07		R/J	SW8260
1,3-Dichloropropane	ND	5	ug/L	06/06/07		R/J	SW8260
1,4-Dichlorobenzene	ND	5	ug/L	06/06/07		R/J	SW8260
2,2-Dichloropropane	ND	5	ug/L	06/06/07		R/J	SW8260
2-Chlorotoluene	ND	5	ug/L	06/06/07		R/J	SW8260
2-Hexanone	ND	25	ug/L	06/06/07		R/J	SW8260
2-Isopropyltoluene	ND	5	ug/L	06/06/07		R/J	SW8260
4-Chlorotoluene	ND	5	ug/L	06/06/07		R/J	SW8260

Client ID: OLD CHAMPLAIN MILL MW-1A

Phoenix I.D.: AJ19141

Parameter	Result	RL	Units	Date	Time	By	Reference
4-Methyl-2-pentanone	ND	25	ug/L	06/06/07		R/J	SW8260
Acetone	ND	50	ug/L	06/06/07		R/J	SW8260
Acrylonitrile	ND	10	ug/L	06/06/07		R/J	SW8260
Benzene	ND	5	ug/L	06/06/07		R/J	SW8260
Bromobenzene	ND	5	ug/L	06/06/07		R/J	SW8260
Bromochloromethane	ND	5	ug/L	06/06/07		R/J	SW8260
Bromodichloromethane	ND	5	ug/L	06/06/07		R/J	SW8260
Bromoform	ND	5	ug/L	06/06/07		R/J	SW8260
Bromomethane	ND	5	ug/L	06/06/07		R/J	SW8260
Carbon Disulfide	ND	5	ug/L	06/06/07		R/J	SW8260
Carbon tetrachloride	ND	5	ug/L	06/06/07		R/J	SW8260
Chlorobenzene	ND	5	ug/L	06/06/07		R/J	SW8260
Chloroethane	ND	5	ug/L	06/06/07		R/J	SW8260
Chloroform	ND	5	ug/L	06/06/07		R/J	SW8260
Chloromethane	ND	5	ug/L	06/06/07		R/J	SW8260
cis-1,2-Dichloroethene	160	5	ug/L	06/06/07		R/J	SW8260
cis-1,3-Dichloropropene	ND	5	ug/L	06/06/07		R/J	SW8260
Dibromochloromethane	ND	5	ug/L	06/06/07		R/J	SW8260
Dibromoethane	ND	5	ug/L	06/06/07		R/J	SW8260
Dibromomethane	ND	5	ug/L	06/06/07		R/J	SW8260
Dichlorodifluoromethane	ND	5	ug/L	06/06/07		R/J	SW8260
Ethylbenzene	ND	5	ug/L	06/06/07		R/J	SW8260
Hexachlorobutadiene	ND	5	ug/L	06/06/07		R/J	SW8260
Isopropylbenzene	ND	5	ug/L	06/06/07		R/J	SW8260
m&p-Xylene	ND	5	ug/L	06/06/07		R/J	SW8260
Methyl Ethyl Ketone	ND	60	ug/L	06/06/07		R/J	SW8260
Methyl t-butyl ether (MTBE)	ND	10	ug/L	06/06/07		R/J	SW8260
Methylene chloride	9.7	5	ug/L	06/06/07		R/J	SW8260
n-Butylbenzene	ND	5	ug/L	06/06/07		R/J	SW8260
n-Propylbenzene	ND	5	ug/L	06/06/07		R/J	SW8260
Naphthalene	ND	5	ug/L	06/06/07		R/J	SW8260
o-Xylene	ND	5	ug/L	06/06/07		R/J	SW8260
p-Isopropyltoluene	ND	5	ug/L	06/06/07		R/J	SW8260
sec-Butylbenzene	ND	5	ug/L	06/06/07		R/J	SW8260
Styrene	ND	5	ug/L	06/06/07		R/J	SW8260
tert-Butylbenzene	ND	5	ug/L	06/06/07		R/J	SW8260
Tetrachloroethene	ND	5	ug/L	06/06/07		R/J	SW8260
Tetrahydrofuran (THF)	ND	10	ug/L	06/06/07		R/J	SW8260
Toluene	ND	5	ug/L	06/06/07		R/J	SW8260
Total Xylenes	ND	5	ug/L	06/06/07		R/J	SW8260
trans-1,2-Dichloroethene	ND	5	ug/L	06/06/07		R/J	SW8260
trans-1,3-Dichloropropene	ND	5	ug/L	06/06/07		R/J	SW8260
trans-1,4-dichloro-2-butene	ND	10	ug/L	06/06/07		R/J	SW8260
Trichloroethene	ND	5	ug/L	06/06/07		R/J	SW8260
Trichlorofluoromethane	ND	5	ug/L	06/06/07		R/J	SW8260
Trichlorotrifluoroethane	ND	5	ug/L	06/06/07		R/J	SW8260

Client ID: OLD CHAMPLAIN MILL MW-1A Phoenix I.D.: AJ19141

Parameter	Result	RL	Units	Date	Time	By	Reference
Vinyl chloride	87	5	ug/L	06/06/07		R/J	SW8260
QA/QC Surrogates							
% 1,2-dichlorobenzene-d4	102		%	06/06/07		R/J	SW8260
% Bromofluorobenzene	92		%	06/06/07		R/J	SW8260
% Dibromofluoromethane	97		%	06/06/07		R/J	SW8260
% Toluene-d8	98		%	06/06/07		R/J	SW8260

Comments:

If there are any questions regarding this data, please call Phoenix Client Services at extension 200.
ND=Not detected BDL=Below Detection Limit RL=Reporting Limit

Phyllis Shiller, Laboratory Director
June 08, 2007

PHOENIX

Environmental Laboratories, Inc.
587 East Middle Turnpike, P.O.Box 370, Manchester, CT 06040
Tel. (860) 645-1102 Fax (860) 645-0823

ACCREDITED IN ACCORDANCE WITH nelac

Analysis Report

June 08, 2007

FOR: Attn: Ms. Aimee Gates
CT Male Associates, PC
50 Century Hill Drive
Latham, NY 12110

Sample Information		Custody Information		Date	Time
Matrix:	WATER	Collected by:	BB	05/31/07	12:35
Location Code:	CT-MALE	Received by:	LP	06/02/07	9:00
Rush Request:		Analyzed by:	see "By" below		
P.O.#:	066448				

SDG I.D.: GAJ19140
Phoenix I.D.: AJ19142

Laboratory Data

Client ID: OLD CHAMPLAIN MILL MW-2A

Parameter	Result	RL	Units	Date	Time	By	Reference
Volatiles							
1,1,1,2-Tetrachloroethane	ND	5	ug/L	06/06/07		R/J	SW8260
1,1,1-Trichloroethane	ND	5	ug/L	06/06/07		R/J	SW8260
1,1,2,2-Tetrachloroethane	ND	5	ug/L	06/06/07		R/J	SW8260
1,1,2-Trichloroethane	ND	5	ug/L	06/06/07		R/J	SW8260
1,1-Dichloroethane	ND	5	ug/L	06/06/07		R/J	SW8260
1,1-Dichloroethene	8.4	5	ug/L	06/06/07		R/J	SW8260
1,1-Dichloropropene	ND	5	ug/L	06/06/07		R/J	SW8260
1,2,3-Trichlorobenzene	ND	5	ug/L	06/06/07		R/J	SW8260
1,2,3-Trichloropropane	ND	5	ug/L	06/06/07		R/J	SW8260
1,2,4-Trichlorobenzene	ND	5	ug/L	06/06/07		R/J	SW8260
1,2,4-Trimethylbenzene	ND	5	ug/L	06/06/07		R/J	SW8260
1,2-Dibromo-3-chloropropane	ND	5	ug/L	06/06/07		R/J	SW8260
1,2-Dichlorobenzene	ND	5	ug/L	06/06/07		R/J	SW8260
1,2-Dichloroethane	ND	5	ug/L	06/06/07		R/J	SW8260
1,2-Dichloropropane	ND	5	ug/L	06/06/07		R/J	SW8260
1,3,5-Trimethylbenzene	ND	5	ug/L	06/06/07		R/J	SW8260
1,3-Dichlorobenzene	ND	5	ug/L	06/06/07		R/J	SW8260
1,3-Dichloropropane	ND	5	ug/L	06/06/07		R/J	SW8260
1,4-Dichlorobenzene	ND	5	ug/L	06/06/07		R/J	SW8260
2,2-Dichloropropane	ND	5	ug/L	06/06/07		R/J	SW8260
2-Chlorotoluene	ND	5	ug/L	06/06/07		R/J	SW8260
2-Hexanone	ND	25	ug/L	06/06/07		R/J	SW8260
2-Isopropyltoluene	ND	5	ug/L	06/06/07		R/J	SW8260
4-Chlorotoluene	ND	5	ug/L	06/06/07		R/J	SW8260

Client ID: OLD CHAMPLAIN MILL MW-2A

Phoenix I.D.: AJ19142

Parameter	Result	RL	Units	Date	Time	By	Reference
4-Methyl-2-pentanone	ND	25	ug/L	06/06/07		R/J	SW8260
Acetone	ND	50	ug/L	06/06/07		R/J	SW8260
Acrylonitrile	ND	10	ug/L	06/06/07		R/J	SW8260
Benzene	ND	5	ug/L	06/06/07		R/J	SW8260
Bromobenzene	ND	5	ug/L	06/06/07		R/J	SW8260
Bromochloromethane	ND	5	ug/L	06/06/07		R/J	SW8260
Bromodichloromethane	ND	5	ug/L	06/06/07		R/J	SW8260
Bromoform	ND	5	ug/L	06/06/07		R/J	SW8260
Bromomethane	ND	5	ug/L	06/06/07		R/J	SW8260
Carbon Disulfide	ND	5	ug/L	06/06/07		R/J	SW8260
Carbon tetrachloride	ND	5	ug/L	06/06/07		R/J	SW8260
Chlorobenzene	ND	5	ug/L	06/06/07		R/J	SW8260
Chloroethane	ND	5	ug/L	06/06/07		R/J	SW8260
Chloroform	ND	5	ug/L	06/06/07		R/J	SW8260
Chloromethane	ND	5	ug/L	06/06/07		R/J	SW8260
cis-1,2-Dichloroethene	7500	500	ug/L	06/06/07		R/J	SW8260
cis-1,3-Dichloropropene	ND	5	ug/L	06/06/07		R/J	SW8260
Dibromochloromethane	ND	5	ug/L	06/06/07		R/J	SW8260
Dibromoethane	ND	5	ug/L	06/06/07		R/J	SW8260
Dibromomethane	ND	5	ug/L	06/06/07		R/J	SW8260
Dichlorodifluoromethane	ND	5	ug/L	06/06/07		R/J	SW8260
Ethylbenzene	ND	5	ug/L	06/06/07		R/J	SW8260
Hexachlorobutadiene	ND	5	ug/L	06/06/07		R/J	SW8260
Isopropylbenzene	ND	5	ug/L	06/06/07		R/J	SW8260
m&p-Xylene	ND	5	ug/L	06/06/07		R/J	SW8260
Methyl Ethyl Ketone	ND	60	ug/L	06/06/07		R/J	SW8260
Methyl t-butyl ether (MTBE)	ND	10	ug/L	06/06/07		R/J	SW8260
Methylene chloride	9.3	5	ug/L	06/06/07		R/J	SW8260
n-Butylbenzene	ND	5	ug/L	06/06/07		R/J	SW8260
n-Propylbenzene	ND	5	ug/L	06/06/07		R/J	SW8260
Naphthalene	ND	5	ug/L	06/06/07		R/J	SW8260
o-Xylene	ND	5	ug/L	06/06/07		R/J	SW8260
p-Isopropyltoluene	ND	5	ug/L	06/06/07		R/J	SW8260
sec-Butylbenzene	ND	5	ug/L	06/06/07		R/J	SW8260
Styrene	ND	5	ug/L	06/06/07		R/J	SW8260
tert-Butylbenzene	ND	5	ug/L	06/06/07		R/J	SW8260
Tetrachloroethene	ND	5	ug/L	06/06/07		R/J	SW8260
Tetrahydrofuran (THF)	ND	10	ug/L	06/06/07		R/J	SW8260
Toluene	ND	5	ug/L	06/06/07		R/J	SW8260
Total Xylenes	ND	5	ug/L	06/06/07		R/J	SW8260
trans-1,2-Dichloroethene	47	5	ug/L	06/06/07		R/J	SW8260
trans-1,3-Dichloropropene	ND	5	ug/L	06/06/07		R/J	SW8260
trans-1,4-dichloro-2-butene	ND	10	ug/L	06/06/07		R/J	SW8260
Trichloroethene	3300	500	ug/L	06/06/07		R/J	SW8260
Trichlorofluoromethane	ND	5	ug/L	06/06/07		R/J	SW8260
Trichlorotrifluoroethane	ND	5	ug/L	06/06/07		R/J	SW8260

Client ID: OLD CHAMPLAIN MILL MW-2A Phoenix I.D.: AJ19142

Parameter	Result	RL	Units	Date	Time	By	Reference
Vinyl chloride	210	5	ug/L	06/06/07		R/J	SW8260
QA/QC Surrogates							
% 1,2-dichlorobenzene-d4	98		%	06/06/07		R/J	SW8260
% Bromofluorobenzene	92		%	06/06/07		R/J	SW8260
% Dibromofluoromethane	100		%	06/06/07		R/J	SW8260
% Toluene-d8	102		%	06/06/07		R/J	SW8260

Comments:

If there are any questions regarding this data, please call Phoenix Client Services at extension 200.
ND=Not detected BDL=Below Detection Limit RL=Reporting Limit

Phyllis Shiller, Laboratory Director
June 08, 2007

PHOENIX

Environmental Laboratories, Inc.
587 East Middle Turnpike, P.O.Box 370, Manchester, CT 06040
Tel. (860) 645-1102 Fax (860) 645-0823

ACCREDITED IN ACCORDANCE WITH nelac

Analysis Report

June 08, 2007

FOR: Attn: Ms. Aimee Gates
CT Male Associates, PC
50 Century Hill Drive
Latham, NY 12110

Sample Information		Custody Information		Date	Time
Matrix:	WATER	Collected by:	BB	05/31/07	12:25
Location Code:	CT-MALE	Received by:	LP	06/02/07	9:00
Rush Request:		Analyzed by:	see "By" below		
P.O.#:	066448				

SDG I.D.: GAJ19140
Phoenix I.D.: AJ19143

Laboratory Data

Client ID: OLD CHAMPLAIN MILL MW-5A

Parameter	Result	RL	Units	Date	Time	By	Reference
Volatiles							
1,1,1,2-Tetrachloroethane	ND	5	ug/L	06/06/07		R/J	SW8260
1,1,1-Trichloroethane	ND	5	ug/L	06/06/07		R/J	SW8260
1,1,2,2-Tetrachloroethane	ND	5	ug/L	06/06/07		R/J	SW8260
1,1,2-Trichloroethane	ND	5	ug/L	06/06/07		R/J	SW8260
1,1-Dichloroethane	ND	5	ug/L	06/06/07		R/J	SW8260
1,1-Dichloroethene	ND	5	ug/L	06/06/07		R/J	SW8260
1,1-Dichloropropene	ND	5	ug/L	06/06/07		R/J	SW8260
1,2,3-Trichlorobenzene	ND	5	ug/L	06/06/07		R/J	SW8260
1,2,3-Trichloropropane	ND	5	ug/L	06/06/07		R/J	SW8260
1,2,4-Trichlorobenzene	ND	5	ug/L	06/06/07		R/J	SW8260
1,2,4-Trimethylbenzene	ND	5	ug/L	06/06/07		R/J	SW8260
1,2-Dibromo-3-chloropropane	ND	5	ug/L	06/06/07		R/J	SW8260
1,2-Dichlorobenzene	ND	5	ug/L	06/06/07		R/J	SW8260
1,2-Dichloroethane	ND	5	ug/L	06/06/07		R/J	SW8260
1,2-Dichloropropane	ND	5	ug/L	06/06/07		R/J	SW8260
1,3,5-Trimethylbenzene	ND	5	ug/L	06/06/07		R/J	SW8260
1,3-Dichlorobenzene	ND	5	ug/L	06/06/07		R/J	SW8260
1,3-Dichloropropane	ND	5	ug/L	06/06/07		R/J	SW8260
1,4-Dichlorobenzene	ND	5	ug/L	06/06/07		R/J	SW8260
2,2-Dichloropropane	ND	5	ug/L	06/06/07		R/J	SW8260
2-Chlorotoluene	ND	5	ug/L	06/06/07		R/J	SW8260
2-Hexanone	ND	25	ug/L	06/06/07		R/J	SW8260
2-Isopropyltoluene	ND	5	ug/L	06/06/07		R/J	SW8260
4-Chlorotoluene	ND	5	ug/L	06/06/07		R/J	SW8260

Client ID: OLD CHAMPLAIN MILL MW-5A

Phoenix I.D.: AJ19143

Parameter	Result	RL	Units	Date	Time	By	Reference
4-Methyl-2-pentanone	ND	25	ug/L	06/06/07		R/J	SW8260
Acetone	ND	50	ug/L	06/06/07		R/J	SW8260
Acrylonitrile	ND	10	ug/L	06/06/07		R/J	SW8260
Benzene	ND	5	ug/L	06/06/07		R/J	SW8260
Bromobenzene	ND	5	ug/L	06/06/07		R/J	SW8260
Bromochloromethane	ND	5	ug/L	06/06/07		R/J	SW8260
Bromodichloromethane	ND	5	ug/L	06/06/07		R/J	SW8260
Bromoform	ND	5	ug/L	06/06/07		R/J	SW8260
Bromomethane	ND	5	ug/L	06/06/07		R/J	SW8260
Carbon Disulfide	ND	5	ug/L	06/06/07		R/J	SW8260
Carbon tetrachloride	ND	5	ug/L	06/06/07		R/J	SW8260
Chlorobenzene	ND	5	ug/L	06/06/07		R/J	SW8260
Chloroethane	ND	5	ug/L	06/06/07		R/J	SW8260
Chloroform	ND	5	ug/L	06/06/07		R/J	SW8260
Chloromethane	ND	5	ug/L	06/06/07		R/J	SW8260
cis-1,2-Dichloroethene	530	100	ug/L	06/06/07		R/J	SW8260
cis-1,3-Dichloropropene	ND	5	ug/L	06/06/07		R/J	SW8260
Dibromochloromethane	ND	5	ug/L	06/06/07		R/J	SW8260
Dibromoethane	ND	5	ug/L	06/06/07		R/J	SW8260
Dibromomethane	ND	5	ug/L	06/06/07		R/J	SW8260
Dichlorodifluoromethane	ND	5	ug/L	06/06/07		R/J	SW8260
Ethylbenzene	ND	5	ug/L	06/06/07		R/J	SW8260
Hexachlorobutadiene	ND	5	ug/L	06/06/07		R/J	SW8260
Isopropylbenzene	ND	5	ug/L	06/06/07		R/J	SW8260
m&p-Xylene	ND	5	ug/L	06/06/07		R/J	SW8260
Methyl Ethyl Ketone	ND	60	ug/L	06/06/07		R/J	SW8260
Methyl t-butyl ether (MTBE)	ND	10	ug/L	06/06/07		R/J	SW8260
Methylene chloride	10	5	ug/L	06/06/07		R/J	SW8260
n-Butylbenzene	ND	5	ug/L	06/06/07		R/J	SW8260
n-Propylbenzene	ND	5	ug/L	06/06/07		R/J	SW8260
Naphthalene	ND	5	ug/L	06/06/07		R/J	SW8260
o-Xylene	ND	5	ug/L	06/06/07		R/J	SW8260
p-Isopropyltoluene	ND	5	ug/L	06/06/07		R/J	SW8260
sec-Butylbenzene	ND	5	ug/L	06/06/07		R/J	SW8260
Styrene	ND	5	ug/L	06/06/07		R/J	SW8260
tert-Butylbenzene	ND	5	ug/L	06/06/07		R/J	SW8260
Tetrachloroethene	ND	5	ug/L	06/06/07		R/J	SW8260
Tetrahydrofuran (THF)	ND	10	ug/L	06/06/07		R/J	SW8260
Toluene	ND	5	ug/L	06/06/07		R/J	SW8260
Total Xylenes	ND	5	ug/L	06/06/07		R/J	SW8260
trans-1,2-Dichloroethene	14	5	ug/L	06/06/07		R/J	SW8260
trans-1,3-Dichloropropene	ND	5	ug/L	06/06/07		R/J	SW8260
trans-1,4-dichloro-2-butene	ND	10	ug/L	06/06/07		R/J	SW8260
Trichloroethene	88	50	ug/L	06/06/07		R/J	SW8260
Trichlorofluoromethane	ND	5	ug/L	06/06/07		R/J	SW8260
Trichlorotrifluoroethane	ND	5	ug/L	06/06/07		R/J	SW8260

Client ID: OLD CHAMPLAIN MILL MW-5A Phoenix I.D.: AJ19143

Parameter	Result	RL	Units	Date	Time	By	Reference
Vinyl chloride	160	100	ug/L	06/06/07		R/J	SW8260
QA/QC Surrogates							
% 1,2-dichlorobenzene-d4	99		%	06/06/07		R/J	SW8260
% Bromofluorobenzene	91		%	06/06/07		R/J	SW8260
% Dibromofluoromethane	97		%	06/06/07		R/J	SW8260
% Toluene-d8	97		%	06/06/07		R/J	SW8260

Comments:

If there are any questions regarding this data, please call Phoenix Client Services at extension 200.
ND=Not detected BDL=Below Detection Limit RL=Reporting Limit

Phyllis Shiller, Laboratory Director
June 08, 2007

PHOENIX

Environmental Laboratories, Inc.
587 East Middle Turnpike, P.O.Box 370, Manchester, CT 06040
Tel. (860) 645-1102 Fax (860) 645-0823

Analysis Report
June 08, 2007

FOR: Attn: Ms. Aimee Gates
CT Male Associates, PC
50 Century Hill Drive
Latham, NY 12110

Sample Information		Custody Information		Date	Time
Matrix:	WATER	Collected by:	BB	05/31/07	13:12
Location Code:	CT-MALE	Received by:	LP	06/02/07	9:00
Rush Request:		Analyzed by:	see "By" below		
P.O.#:	066448				

SDG I.D.: GAJ19140
Phoenix I.D.: AJ19144

Laboratory Data

Client ID: OLD CHAMPLAIN MILL MW-3A

Parameter	Result	RL	Units	Date	Time	By	Reference
Volatiles							
1,1,1,2-Tetrachloroethane	ND	5	ug/L	06/06/07		R/J	SW8260
1,1,1-Trichloroethane	ND	5	ug/L	06/06/07		R/J	SW8260
1,1,2,2-Tetrachloroethane	ND	5	ug/L	06/06/07		R/J	SW8260
1,1,2-Trichloroethane	ND	5	ug/L	06/06/07		R/J	SW8260
1,1-Dichloroethane	ND	5	ug/L	06/06/07		R/J	SW8260
1,1-Dichloroethene	ND	5	ug/L	06/06/07		R/J	SW8260
1,1-Dichloropropene	ND	5	ug/L	06/06/07		R/J	SW8260
1,2,3-Trichlorobenzene	ND	5	ug/L	06/06/07		R/J	SW8260
1,2,3-Trichloropropane	ND	5	ug/L	06/06/07		R/J	SW8260
1,2,4-Trichlorobenzene	ND	5	ug/L	06/06/07		R/J	SW8260
1,2,4-Trimethylbenzene	ND	5	ug/L	06/06/07		R/J	SW8260
1,2-Dibromo-3-chloropropane	ND	5	ug/L	06/06/07		R/J	SW8260
1,2-Dichlorobenzene	ND	5	ug/L	06/06/07		R/J	SW8260
1,2-Dichloroethane	ND	5	ug/L	06/06/07		R/J	SW8260
1,2-Dichloropropane	ND	5	ug/L	06/06/07		R/J	SW8260
1,3,5-Trimethylbenzene	ND	5	ug/L	06/06/07		R/J	SW8260
1,3-Dichlorobenzene	ND	5	ug/L	06/06/07		R/J	SW8260
1,3-Dichloropropane	ND	5	ug/L	06/06/07		R/J	SW8260
1,4-Dichlorobenzene	ND	5	ug/L	06/06/07		R/J	SW8260
2,2-Dichloropropane	ND	5	ug/L	06/06/07		R/J	SW8260
2-Chlorotoluene	ND	5	ug/L	06/06/07		R/J	SW8260
2-Hexanone	ND	25	ug/L	06/06/07		R/J	SW8260
2-Isopropyltoluene	ND	5	ug/L	06/06/07		R/J	SW8260
4-Chlorotoluene	ND	5	ug/L	06/06/07		R/J	SW8260

Client ID: OLD CHAMPLAIN MILL MW-3A

Phoenix I.D.: AJ19144

Parameter	Result	RL	Units	Date	Time	By	Reference
4-Methyl-2-pentanone	ND	25	ug/L	06/06/07		R/J	SW8260
Acetone	ND	50	ug/L	06/06/07		R/J	SW8260
Acrylonitrile	ND	10	ug/L	06/06/07		R/J	SW8260
Benzene	ND	5	ug/L	06/06/07		R/J	SW8260
Bromobenzene	ND	5	ug/L	06/06/07		R/J	SW8260
Bromochloromethane	ND	5	ug/L	06/06/07		R/J	SW8260
Bromodichloromethane	ND	5	ug/L	06/06/07		R/J	SW8260
Bromoform	ND	5	ug/L	06/06/07		R/J	SW8260
Bromomethane	ND	5	ug/L	06/06/07		R/J	SW8260
Carbon Disulfide	ND	5	ug/L	06/06/07		R/J	SW8260
Carbon tetrachloride	ND	5	ug/L	06/06/07		R/J	SW8260
Chlorobenzene	ND	5	ug/L	06/06/07		R/J	SW8260
Chloroethane	ND	5	ug/L	06/06/07		R/J	SW8260
Chloroform	ND	5	ug/L	06/06/07		R/J	SW8260
Chloromethane	ND	5	ug/L	06/06/07		R/J	SW8260
cis-1,2-Dichloroethene	15	5	ug/L	06/06/07		R/J	SW8260
cis-1,3-Dichloropropene	ND	5	ug/L	06/06/07		R/J	SW8260
Dibromochloromethane	ND	5	ug/L	06/06/07		R/J	SW8260
Dibromoethane	ND	5	ug/L	06/06/07		R/J	SW8260
Dibromomethane	ND	5	ug/L	06/06/07		R/J	SW8260
Dichlorodifluoromethane	ND	5	ug/L	06/06/07		R/J	SW8260
Ethylbenzene	ND	5	ug/L	06/06/07		R/J	SW8260
Hexachlorobutadiene	ND	5	ug/L	06/06/07		R/J	SW8260
Isopropylbenzene	ND	5	ug/L	06/06/07		R/J	SW8260
m&p-Xylene	ND	5	ug/L	06/06/07		R/J	SW8260
Methyl Ethyl Ketone	ND	60	ug/L	06/06/07		R/J	SW8260
Methyl t-butyl ether (MTBE)	ND	10	ug/L	06/06/07		R/J	SW8260
Methylene chloride	ND	5	ug/L	06/06/07		R/J	SW8260
n-Butylbenzene	ND	5	ug/L	06/06/07		R/J	SW8260
n-Propylbenzene	ND	5	ug/L	06/06/07		R/J	SW8260
Naphthalene	ND	5	ug/L	06/06/07		R/J	SW8260
o-Xylene	ND	5	ug/L	06/06/07		R/J	SW8260
p-Isopropyltoluene	ND	5	ug/L	06/06/07		R/J	SW8260
sec-Butylbenzene	ND	5	ug/L	06/06/07		R/J	SW8260
Styrene	ND	5	ug/L	06/06/07		R/J	SW8260
tert-Butylbenzene	ND	5	ug/L	06/06/07		R/J	SW8260
Tetrachloroethene	ND	5	ug/L	06/06/07		R/J	SW8260
Tetrahydrofuran (THF)	ND	10	ug/L	06/06/07		R/J	SW8260
Toluene	ND	5	ug/L	06/06/07		R/J	SW8260
Total Xylenes	ND	5	ug/L	06/06/07		R/J	SW8260
trans-1,2-Dichloroethene	ND	5	ug/L	06/06/07		R/J	SW8260
trans-1,3-Dichloropropene	ND	5	ug/L	06/06/07		R/J	SW8260
trans-1,4-dichloro-2-butene	ND	10	ug/L	06/06/07		R/J	SW8260
Trichloroethene	ND	5	ug/L	06/06/07		R/J	SW8260
Trichlorofluoromethane	ND	5	ug/L	06/06/07		R/J	SW8260
Trichlorotrifluoroethane	ND	5	ug/L	06/06/07		R/J	SW8260

Client ID: OLD CHAMPLAIN MILL MW-3A Phoenix I.D.: AJ19144

Parameter	Result	RL	Units	Date	Time	By	Reference
Vinyl chloride	ND	5	ug/L	06/06/07		R/J	SW8260
QA/QC Surrogates							
% 1,2-dichlorobenzene-d4	95		%	06/06/07		R/J	SW8260
% Bromofluorobenzene	90		%	06/06/07		R/J	SW8260
% Dibromofluoromethane	96		%	06/06/07		R/J	SW8260
% Toluene-d8	96		%	06/06/07		R/J	SW8260

Comments:

If there are any questions regarding this data, please call Phoenix Client Services at extension 200.
ND=Not detected BDL=Below Detection Limit RL=Reporting Limit

Phyllis Shiller, Laboratory Director
June 08, 2007

PHOENIX

Environmental Laboratories, Inc.
587 East Middle Turnpike, P.O.Box 370, Manchester, CT 06040
Tel. (860) 645-1102 Fax (860) 645-0823

ACCREDITED IN ACCORDANCE WITH nelac

Analysis Report

June 08, 2007

FOR: Attn: Ms. Aimee Gates
CT Male Associates, PC
50 Century Hill Drive
Latham, NY 12110

Sample Information		Custody Information		Date	Time
Matrix:	WATER	Collected by:	BB	05/31/07	13:10
Location Code:	CT-MALE	Received by:	LP	06/02/07	9:00
Rush Request:		Analyzed by:	see "By" below		
P.O.#:	066448				

SDG I.D.: GAJ19140
Phoenix I.D.: AJ19145

Laboratory Data

Client ID: OLD CHAMPLAIN MILL MW-4A

Parameter	Result	RL	Units	Date	Time	By	Reference
Semi-Volatile Extraction	Completed			06/05/07		O/K	SW3510/3520
Volatiles							
1,1,1,2-Tetrachloroethane	ND	5	ug/L	06/06/07		R/J	SW8260
1,1,1-Trichloroethane	ND	5	ug/L	06/06/07		R/J	SW8260
1,1,2,2-Tetrachloroethane	ND	5	ug/L	06/06/07		R/J	SW8260
1,1,2-Trichloroethane	ND	5	ug/L	06/06/07		R/J	SW8260
1,1-Dichloroethane	ND	5	ug/L	06/06/07		R/J	SW8260
1,1-Dichloroethene	ND	5	ug/L	06/06/07		R/J	SW8260
1,1-Dichloropropene	ND	5	ug/L	06/06/07		R/J	SW8260
1,2,3-Trichlorobenzene	ND	5	ug/L	06/06/07		R/J	SW8260
1,2,3-Trichloropropane	ND	5	ug/L	06/06/07		R/J	SW8260
1,2,4-Trichlorobenzene	ND	5	ug/L	06/06/07		R/J	SW8260
1,2,4-Trimethylbenzene	ND	5	ug/L	06/06/07		R/J	SW8260
1,2-Dibromo-3-chloropropane	ND	5	ug/L	06/06/07		R/J	SW8260
1,2-Dichlorobenzene	ND	5	ug/L	06/06/07		R/J	SW8260
1,2-Dichloroethane	ND	5	ug/L	06/06/07		R/J	SW8260
1,2-Dichloropropane	ND	5	ug/L	06/06/07		R/J	SW8260
1,3,5-Trimethylbenzene	ND	5	ug/L	06/06/07		R/J	SW8260
1,3-Dichlorobenzene	ND	5	ug/L	06/06/07		R/J	SW8260
1,3-Dichloropropane	ND	5	ug/L	06/06/07		R/J	SW8260
1,4-Dichlorobenzene	ND	5	ug/L	06/06/07		R/J	SW8260
2,2-Dichloropropane	ND	5	ug/L	06/06/07		R/J	SW8260
2-Chlorotoluene	ND	5	ug/L	06/06/07		R/J	SW8260
2-Hexanone	ND	25	ug/L	06/06/07		R/J	SW8260
2-Isopropyltoluene	ND	5	ug/L	06/06/07		R/J	SW8260

Client ID: OLD CHAMPLAIN MILL MW-4A

Phoenix I.D.: AJ19145

Parameter	Result	RL	Units	Date	Time	By	Reference
4-Chlorotoluene	ND	5	ug/L	06/06/07		R/J	SW8260
4-Methyl-2-pentanone	ND	25	ug/L	06/06/07		R/J	SW8260
Acetone	ND	50	ug/L	06/06/07		R/J	SW8260
Acrylonitrile	ND	10	ug/L	06/06/07		R/J	SW8260
Benzene	ND	5	ug/L	06/06/07		R/J	SW8260
Bromobenzene	ND	5	ug/L	06/06/07		R/J	SW8260
Bromochloromethane	ND	5	ug/L	06/06/07		R/J	SW8260
Bromodichloromethane	ND	5	ug/L	06/06/07		R/J	SW8260
Bromoform	ND	5	ug/L	06/06/07		R/J	SW8260
Bromomethane	ND	5	ug/L	06/06/07		R/J	SW8260
Carbon Disulfide	ND	5	ug/L	06/06/07		R/J	SW8260
Carbon tetrachloride	ND	5	ug/L	06/06/07		R/J	SW8260
Chlorobenzene	ND	5	ug/L	06/06/07		R/J	SW8260
Chloroethane	ND	5	ug/L	06/06/07		R/J	SW8260
Chloroform	ND	5	ug/L	06/06/07		R/J	SW8260
Chloromethane	ND	5	ug/L	06/06/07		R/J	SW8260
cis-1,2-Dichloroethene	13	5	ug/L	06/06/07		R/J	SW8260
cis-1,3-Dichloropropene	ND	5	ug/L	06/06/07		R/J	SW8260
Dibromochloromethane	ND	5	ug/L	06/06/07		R/J	SW8260
Dibromoethane	ND	5	ug/L	06/06/07		R/J	SW8260
Dibromomethane	ND	5	ug/L	06/06/07		R/J	SW8260
Dichlorodifluoromethane	ND	5	ug/L	06/06/07		R/J	SW8260
Ethylbenzene	ND	5	ug/L	06/06/07		R/J	SW8260
Hexachlorobutadiene	ND	5	ug/L	06/06/07		R/J	SW8260
Isopropylbenzene	ND	5	ug/L	06/06/07		R/J	SW8260
m&p-Xylene	ND	5	ug/L	06/06/07		R/J	SW8260
Methyl Ethyl Ketone	ND	60	ug/L	06/06/07		R/J	SW8260
Methyl t-butyl ether (MTBE)	ND	10	ug/L	06/06/07		R/J	SW8260
Methylene chloride	ND	5	ug/L	06/06/07		R/J	SW8260
n-Butylbenzene	ND	5	ug/L	06/06/07		R/J	SW8260
n-Propylbenzene	ND	5	ug/L	06/06/07		R/J	SW8260
Naphthalene	ND	5	ug/L	06/06/07		R/J	SW8260
o-Xylene	ND	5	ug/L	06/06/07		R/J	SW8260
p-Isopropyltoluene	ND	5	ug/L	06/06/07		R/J	SW8260
sec-Butylbenzene	ND	5	ug/L	06/06/07		R/J	SW8260
Styrene	ND	5	ug/L	06/06/07		R/J	SW8260
tert-Butylbenzene	ND	5	ug/L	06/06/07		R/J	SW8260
Tetrachloroethene	ND	5	ug/L	06/06/07		R/J	SW8260
Tetrahydrofuran (THF)	ND	10	ug/L	06/06/07		R/J	SW8260
Toluene	ND	5	ug/L	06/06/07		R/J	SW8260
Total Xylenes	ND	5	ug/L	06/06/07		R/J	SW8260
trans-1,2-Dichloroethene	ND	5	ug/L	06/06/07		R/J	SW8260
trans-1,3-Dichloropropene	ND	5	ug/L	06/06/07		R/J	SW8260
trans-1,4-dichloro-2-butene	ND	10	ug/L	06/06/07		R/J	SW8260
Trichloroethene	ND	5	ug/L	06/06/07		R/J	SW8260
Trichlorofluoromethane	ND	5	ug/L	06/06/07		R/J	SW8260

Client ID: OLD CHAMPLAIN MILL MW-4A — Phoenix I.D.: AJ19145

Parameter	Result	RL	Units	Date	Time	By	Reference
Trichlorotrifluoroethane	ND	5	ug/L	06/06/07		R/J	SW8260
Vinyl chloride	ND	5	ug/L	06/06/07		R/J	SW8260
QA/QC Surrogates							
% 1,2-dichlorobenzene-d4	98		%	06/06/07		R/J	SW8260
% Bromofluorobenzene	92		%	06/06/07		R/J	SW8260
% Dibromofluoromethane	98		%	06/06/07		R/J	SW8260
% Toluene-d8	96		%	06/06/07		R/J	SW8260
Semivolatiles							
1,2,4-Trichlorobenzene	ND	10.0	ug/L	06/07/07		KCA	E625/SW8270
1,2-Dichlorobenzene	ND	10.0	ug/L	06/07/07		KCA	E625/SW8270
1,2-Diphenylhydrazine	ND	10.0	ug/L	06/07/07		KCA	E625/SW8270
1,3-Dichlorobenzene	ND	10.0	ug/L	06/07/07		KCA	E625/SW8270
1,4-Dichlorobenzene	ND	10.0	ug/L	06/07/07		KCA	E625/SW8270
2,4-Dinitrotoluene	ND	10.0	ug/L	06/07/07		KCA	E625/SW8270
2,6-Dinitrotoluene	ND	10.0	ug/L	06/07/07		KCA	E625/SW8270
2-Chloronaphthalene	ND	10.0	ug/L	06/07/07		KCA	E625/SW8270
2-Methylnaphthalene	ND	10.0	ug/L	06/07/07		KCA	E625/SW8270
2-Nitroaniline	ND	50.0	ug/L	06/07/07		KCA	E625/SW8270
3,3'-Dichlorobenzidine	ND	20.0	ug/L	06/07/07		KCA	E625/SW8270
3-Nitroaniline	ND	50.0	ug/L	06/07/07		KCA	E625/SW8270
4-Bromophenyl phenyl ether	ND	10.0	ug/L	06/07/07		KCA	E625/SW8270
4-Chloroaniline	ND	20.0	ug/L	06/07/07		KCA	E625/SW8270
4-Chlorophenyl phenyl ether	ND	10.0	ug/L	06/07/07		KCA	E625/SW8270
4-Nitroaniline	ND	50.0	ug/L	06/07/07		KCA	E625/SW8270
Acenaphthene	ND	10.0	ug/L	06/07/07		KCA	E625/SW8270
Acenaphthylene	ND	10.0	ug/L	06/07/07		KCA	E625/SW8270
Anthracene	ND	10.0	ug/L	06/07/07		KCA	E625/SW8270
Benzidine	ND	10.0	ug/L	06/07/07		KCA	E625/SW8270
Benzo(a)anthracene	ND	10.0	ug/L	06/07/07		KCA	E625/SW8270
Benzo(a)pyrene	ND	10.0	ug/L	06/07/07		KCA	E625/SW8270
Benzo(b)fluoranthene	ND	10.0	ug/L	06/07/07		KCA	E625/SW8270
Benzo(g,h,i)perylene	ND	10.0	ug/L	06/07/07		KCA	E625/SW8270
Benzo(k)fluoranthene	ND	10.0	ug/L	06/07/07		KCA	E625/SW8270
Benzoic acid	ND	50.0	ug/L	06/07/07		KCA	E625/SW8270
Benzyl alcohol	ND	20.0	ug/L	06/07/07		KCA	E625/SW8270
Benzyl butyl phthalate	ND	10.0	ug/L	06/07/07		KCA	E625/SW8270
Bis(2-chloroethoxy)methane	ND	10.0	ug/L	06/07/07		KCA	E625/SW8270
Bis(2-chloroethyl)ether	ND	10.0	ug/L	06/07/07		KCA	E625/SW8270
Bis(2-chloroisopropyl)ether	ND	10.0	ug/L	06/07/07		KCA	E625/SW8270
Bis(2-ethylhexyl)phthalate	ND	10.0	ug/L	06/07/07		KCA	E625/SW8270
Chrysene	ND	10.0	ug/L	06/07/07		KCA	E625/SW8270
Di-n-butylphthalate	ND	10.0	ug/L	06/07/07		KCA	E625/SW8270
Di-n-octyl phthalate	ND	10.0	ug/L	06/07/07		KCA	E625/SW8270
Dibenz(a,h)anthracene	ND	10.0	ug/L	06/07/07		KCA	E625/SW8270
Dibenzofuran	ND	10.0	ug/L	06/07/07		KCA	E625/SW8270

Client ID: OLD CHAMPLAIN MILL MW-4A Phoenix I.D.: AJ19145

Parameter	Result	RL	Units	Date	Time	By	Reference
Diethyl phthalate	ND	10.0	ug/L	06/07/07		KCA	E625/SW8270
Dimethyl phthalate	ND	10.0	ug/L	06/07/07		KCA	E625/SW8270
Fluoranthene	ND	10.0	ug/L	06/07/07		KCA	E625/SW8270
Fluorene	ND	10.0	ug/L	06/07/07		KCA	E625/SW8270
Hexachlorobenzene	ND	10.0	ug/L	06/07/07		KCA	E625/SW8270
Hexachlorobutadiene	ND	10.0	ug/L	06/07/07		KCA	E625/SW8270
Hexachlorocyclopentadiene	ND	10.0	ug/L	06/07/07		KCA	E625/SW8270
Hexachloroethane	ND	10.0	ug/L	06/07/07		KCA	E625/SW8270
Indeno(1,2,3-c,d)pyrene	ND	10.0	ug/L	06/07/07		KCA	E625/SW8270
Isophorone	ND	10.0	ug/L	06/07/07		KCA	E625/SW8270
N-Nitrosodi-n-propylamine	ND	10.0	ug/L	06/07/07		KCA	E625/SW8270
N-Nitrosodimethylamine	ND	10.0	ug/L	06/07/07		KCA	E625/SW8270
N-Nitrosodiphenylamine	ND	10.0	ug/L	06/07/07		KCA	E625/SW8270
Naphthalene	ND	10.0	ug/L	06/07/07		KCA	E625/SW8270
Nitrobenzene	ND	10.0	ug/L	06/07/07		KCA	E625/SW8270
Phenanthrene	ND	10.0	ug/L	06/07/07		KCA	E625/SW8270
Pyrene	ND	10.0	ug/L	06/07/07		KCA	E625/SW8270

Comments:

Poor surrogate recovery was observed. The other surrogates associated with this sample were within QA/QC criteria. No further action was necessary.

If there are any questions regarding this data, please call Phoenix Client Services at extension 200.

ND=Not detected BDL=Below Detection Limit RL=Reporting Limit

Phyllis Shiller, Laboratory Director
June 08, 2007

PHOENIX

Environmental Laboratories, Inc.
587 East Middle Turnpike, P.O.Box 370, Manchester, CT 06040
Tel. (860) 645-1102 Fax (860) 645-0823

ACCREDITED IN ACCORDANCE WITH nelac

Analysis Report
June 08, 2007

FOR: Attn: Ms. Aimee Gates
CT Male Associates, PC
50 Century Hill Drive
Latham, NY 12110

Sample Information		Custody Information		Date	Time
Matrix:	WATER	Collected by:	BB	05/31/07	14:10
Location Code:	CT-MALE	Received by:	LP	06/02/07	9:00
Rush Request:		Analyzed by:	see "By" below		
P.O.#:	066448				

SDG I.D.: GAJ19140
Phoenix I.D.: AJ19146

Laboratory Data

Client ID: OLD CHAMPLAIN MILL MW-7A

Parameter	Result	RL	Units	Date	Time	By	Reference
Semi-Volatile Extraction	Completed			06/05/07		O/K	SW3510/3520
Volatiles							
1,1,1,2-Tetrachloroethane	ND	5	ug/L	06/06/07		R/J	SW8260
1,1,1-Trichloroethane	ND	5	ug/L	06/06/07		R/J	SW8260
1,1,2,2-Tetrachloroethane	ND	5	ug/L	06/06/07		R/J	SW8260
1,1,2-Trichloroethane	ND	5	ug/L	06/06/07		R/J	SW8260
1,1-Dichloroethane	ND	5	ug/L	06/06/07		R/J	SW8260
1,1-Dichloroethene	ND	5	ug/L	06/06/07		R/J	SW8260
1,1-Dichloropropene	ND	5	ug/L	06/06/07		R/J	SW8260
1,2,3-Trichlorobenzene	ND	5	ug/L	06/06/07		R/J	SW8260
1,2,3-Trichloropropane	ND	5	ug/L	06/06/07		R/J	SW8260
1,2,4-Trichlorobenzene	ND	5	ug/L	06/06/07		R/J	SW8260
1,2,4-Trimethylbenzene	ND	5	ug/L	06/06/07		R/J	SW8260
1,2-Dibromo-3-chloropropane	ND	5	ug/L	06/06/07		R/J	SW8260
1,2-Dichlorobenzene	ND	5	ug/L	06/06/07		R/J	SW8260
1,2-Dichloroethane	ND	5	ug/L	06/06/07		R/J	SW8260
1,2-Dichloropropane	ND	5	ug/L	06/06/07		R/J	SW8260
1,3,5-Trimethylbenzene	ND	5	ug/L	06/06/07		R/J	SW8260
1,3-Dichlorobenzene	ND	5	ug/L	06/06/07		R/J	SW8260
1,3-Dichloropropane	ND	5	ug/L	06/06/07		R/J	SW8260
1,4-Dichlorobenzene	ND	5	ug/L	06/06/07		R/J	SW8260
2,2-Dichloropropane	ND	5	ug/L	06/06/07		R/J	SW8260
2-Chlorotoluene	ND	5	ug/L	06/06/07		R/J	SW8260
2-Hexanone	ND	25	ug/L	06/06/07		R/J	SW8260
2-Isopropyltoluene	ND	5	ug/L	06/06/07		R/J	SW8260

Client ID: OLD CHAMPLAIN MILL MW-7A

Phoenix I.D.: AJ19146

Parameter	Result	RL	Units	Date	Time	By	Reference
4-Chlorotoluene	ND	5	ug/L	06/06/07		R/J	SW8260
4-Methyl-2-pentanone	ND	25	ug/L	06/06/07		R/J	SW8260
Acetone	ND	50	ug/L	06/06/07		R/J	SW8260
Acrylonitrile	ND	10	ug/L	06/06/07		R/J	SW8260
Benzene	ND	5	ug/L	06/06/07		R/J	SW8260
Bromobenzene	ND	5	ug/L	06/06/07		R/J	SW8260
Bromochloromethane	ND	5	ug/L	06/06/07		R/J	SW8260
Bromodichloromethane	ND	5	ug/L	06/06/07		R/J	SW8260
Bromoform	ND	5	ug/L	06/06/07		R/J	SW8260
Bromomethane	ND	5	ug/L	06/06/07		R/J	SW8260
Carbon Disulfide	ND	5	ug/L	06/06/07		R/J	SW8260
Carbon tetrachloride	ND	5	ug/L	06/06/07		R/J	SW8260
Chlorobenzene	ND	5	ug/L	06/06/07		R/J	SW8260
Chloroethane	ND	5	ug/L	06/06/07		R/J	SW8260
Chloroform	ND	5	ug/L	06/06/07		R/J	SW8260
Chloromethane	ND	5	ug/L	06/06/07		R/J	SW8260
cis-1,2-Dichloroethene	17	5	ug/L	06/06/07		R/J	SW8260
cis-1,3-Dichloropropene	ND	5	ug/L	06/06/07		R/J	SW8260
Dibromochloromethane	ND	5	ug/L	06/06/07		R/J	SW8260
Dibromoethane	ND	5	ug/L	06/06/07		R/J	SW8260
Dibromomethane	ND	5	ug/L	06/06/07		R/J	SW8260
Dichlorodifluoromethane	ND	5	ug/L	06/06/07		R/J	SW8260
Ethylbenzene	ND	5	ug/L	06/06/07		R/J	SW8260
Hexachlorobutadiene	ND	5	ug/L	06/06/07		R/J	SW8260
Isopropylbenzene	ND	5	ug/L	06/06/07		R/J	SW8260
m&p-Xylene	ND	5	ug/L	06/06/07		R/J	SW8260
Methyl Ethyl Ketone	ND	60	ug/L	06/06/07		R/J	SW8260
Methyl t-butyl ether (MTBE)	ND	10	ug/L	06/06/07		R/J	SW8260
Methylene chloride	11	5	ug/L	06/06/07		R/J	SW8260
n-Butylbenzene	ND	5	ug/L	06/06/07		R/J	SW8260
n-Propylbenzene	ND	5	ug/L	06/06/07		R/J	SW8260
Naphthalene	42	5	ug/L	06/06/07		R/J	SW8260
o-Xylene	ND	5	ug/L	06/06/07		R/J	SW8260
p-Isopropyltoluene	ND	5	ug/L	06/06/07		R/J	SW8260
sec-Butylbenzene	ND	5	ug/L	06/06/07		R/J	SW8260
Styrene	ND	5	ug/L	06/06/07		R/J	SW8260
tert-Butylbenzene	ND	5	ug/L	06/06/07		R/J	SW8260
Tetrachloroethene	ND	5	ug/L	06/06/07		R/J	SW8260
Tetrahydrofuran (THF)	ND	10	ug/L	06/06/07		R/J	SW8260
Toluene	ND	5	ug/L	06/06/07		R/J	SW8260
Total Xylenes	ND	5	ug/L	06/06/07		R/J	SW8260
trans-1,2-Dichloroethene	ND	5	ug/L	06/06/07		R/J	SW8260
trans-1,3-Dichloropropene	ND	5	ug/L	06/06/07		R/J	SW8260
trans-1,4-dichloro-2-butene	ND	10	ug/L	06/06/07		R/J	SW8260
Trichloroethene	7.2	5	ug/L	06/06/07		R/J	SW8260
Trichlorofluoromethane	ND	5	ug/L	06/06/07		R/J	SW8260

Client ID: OLD CHAMPLAIN MILL MW-7A — Phoenix I.D.: AJ19146

Parameter	Result	RL	Units	Date	Time	By	Reference
Trichlorotrifluoroethane	ND	5	ug/L	06/06/07		R/J	SW8260
Vinyl chloride	ND	5	ug/L	06/06/07		R/J	SW8260
QA/QC Surrogates							
% 1,2-dichlorobenzene-d4	100		%	06/06/07		R/J	SW8260
% Bromofluorobenzene	90		%	06/06/07		R/J	SW8260
% Dibromofluoromethane	99		%	06/06/07		R/J	SW8260
% Toluene-d8	95		%	06/06/07		R/J	SW8260
Semivolatiles							
1,2,4-Trichlorobenzene	ND	10.0	ug/L	06/07/07		KCA	E625/SW8270
1,2-Dichlorobenzene	ND	10.0	ug/L	06/07/07		KCA	E625/SW8270
1,2-Diphenylhydrazine	ND	10.0	ug/L	06/07/07		KCA	E625/SW8270
1,3-Dichlorobenzene	ND	10.0	ug/L	06/07/07		KCA	E625/SW8270
1,4-Dichlorobenzene	ND	10.0	ug/L	06/07/07		KCA	E625/SW8270
2,4-Dinitrotoluene	ND	10.0	ug/L	06/07/07		KCA	E625/SW8270
2,6-Dinitrotoluene	ND	10.0	ug/L	06/07/07		KCA	E625/SW8270
2-Chloronaphthalene	ND	10.0	ug/L	06/07/07		KCA	E625/SW8270
2-Methylnaphthalene	ND	10.0	ug/L	06/07/07		KCA	E625/SW8270
2-Nitroaniline	ND	50.0	ug/L	06/07/07		KCA	E625/SW8270
3,3'-Dichlorobenzidine	ND	20.0	ug/L	06/07/07		KCA	E625/SW8270
3-Nitroaniline	ND	50.0	ug/L	06/07/07		KCA	E625/SW8270
4-Bromophenyl phenyl ether	ND	10.0	ug/L	06/07/07		KCA	E625/SW8270
4-Chloroaniline	ND	20.0	ug/L	06/07/07		KCA	E625/SW8270
4-Chlorophenyl phenyl ether	ND	10.0	ug/L	06/07/07		KCA	E625/SW8270
4-Nitroaniline	ND	50.0	ug/L	06/07/07		KCA	E625/SW8270
Acenaphthene	ND	10.0	ug/L	06/07/07		KCA	E625/SW8270
Acenaphthylene	ND	10.0	ug/L	06/07/07		KCA	E625/SW8270
Anthracene	ND	10.0	ug/L	06/07/07		KCA	E625/SW8270
Benzidine	ND	10.0	ug/L	06/07/07		KCA	E625/SW8270
Benzo(a)anthracene	ND	10.0	ug/L	06/07/07		KCA	E625/SW8270
Benzo(a)pyrene	ND	10.0	ug/L	06/07/07		KCA	E625/SW8270
Benzo(b)fluoranthene	ND	10.0	ug/L	06/07/07		KCA	E625/SW8270
Benzo(g,h,i)perylene	ND	10.0	ug/L	06/07/07		KCA	E625/SW8270
Benzo(k)fluoranthene	ND	10.0	ug/L	06/07/07		KCA	E625/SW8270
Benzoic acid	ND	50.0	ug/L	06/07/07		KCA	E625/SW8270
Benzyl alcohol	ND	20.0	ug/L	06/07/07		KCA	E625/SW8270
Benzyl butyl phthalate	ND	10.0	ug/L	06/07/07		KCA	E625/SW8270
Bis(2-chloroethoxy)methane	ND	10.0	ug/L	06/07/07		KCA	E625/SW8270
Bis(2-chloroethyl)ether	ND	10.0	ug/L	06/07/07		KCA	E625/SW8270
Bis(2-chloroisopropyl)ether	ND	10.0	ug/L	06/07/07		KCA	E625/SW8270
Bis(2-ethylhexyl)phthalate	ND	10.0	ug/L	06/07/07		KCA	E625/SW8270
Chrysene	ND	10.0	ug/L	06/07/07		KCA	E625/SW8270
Di-n-butylphthalate	ND	10.0	ug/L	06/07/07		KCA	E625/SW8270
Di-n-octyl phthalate	ND	10.0	ug/L	06/07/07		KCA	E625/SW8270
Dibenz(a,h)anthracene	ND	10.0	ug/L	06/07/07		KCA	E625/SW8270
Dibenzofuran	ND	10.0	ug/L	06/07/07		KCA	E625/SW8270

Client ID: OLD CHAMPLAIN MILL MW-7A Phoenix I.D.: AJ19146

Parameter	Result	RL	Units	Date	Time	By	Reference
Diethyl phthalate	ND	10.0	ug/L	06/07/07		KCA	E625/SW8270
Dimethyl phthalate	ND	10.0	ug/L	06/07/07		KCA	E625/SW8270
Fluoranthene	ND	10.0	ug/L	06/07/07		KCA	E625/SW8270
Fluorene	ND	10.0	ug/L	06/07/07		KCA	E625/SW8270
Hexachlorobenzene	ND	10.0	ug/L	06/07/07		KCA	E625/SW8270
Hexachlorobutadiene	ND	10.0	ug/L	06/07/07		KCA	E625/SW8270
Hexachlorocyclopentadiene	ND	10.0	ug/L	06/07/07		KCA	E625/SW8270
Hexachloroethane	ND	10.0	ug/L	06/07/07		KCA	E625/SW8270
Indeno(1,2,3-c,d)pyrene	ND	10.0	ug/L	06/07/07		KCA	E625/SW8270
Isophorone	ND	10.0	ug/L	06/07/07		KCA	E625/SW8270
N-Nitrosodi-n-propylamine	ND	10.0	ug/L	06/07/07		KCA	E625/SW8270
N-Nitrosodimethylamine	ND	10.0	ug/L	06/07/07		KCA	E625/SW8270
N-Nitrosodiphenylamine	ND	10.0	ug/L	06/07/07		KCA	E625/SW8270
Naphthalene	ND	10.0	ug/L	06/07/07		KCA	E625/SW8270
Nitrobenzene	ND	10.0	ug/L	06/07/07		KCA	E625/SW8270
Phenanthrene	ND	10.0	ug/L	06/07/07		KCA	E625/SW8270
Pyrene	ND	10.0	ug/L	06/07/07		KCA	E625/SW8270

Comments:

Poor surrogate recovery was observed. The other surrogates associated with this sample were within QA/QC criteria. No further action was necessary.

If there are any questions regarding this data, please call Phoenix Client Services at extension 200.

ND=Not detected BDL=Below Detection Limit RL=Reporting Limit

Phyllis Shiller, Laboratory Director
June 08, 2007

PHOENIX

Environmental Laboratories, Inc.
587 East Middle Turnpike, P.O.Box 370, Manchester, CT 06040
Tel. (860) 645-1102 Fax (860) 645-0823

ACCREDITED IN ACCORDANCE WITH nelac

Analysis Report

June 08, 2007

FOR: Attn: Ms. Aimee Gates
CT Male Associates, PC
50 Century Hill Drive
Latham, NY 12110

Sample Information		Custody Information		Date	Time
Matrix:	WATER	Collected by:	BB	05/31/07	14:12
Location Code:	CT-MALE	Received by:	LP	06/02/07	9:00
Rush Request:		Analyzed by:	see "By" below		
P.O.#:	066448				

SDG I.D.: GAJ19140
Phoenix I.D.: AJ19147

Laboratory Data

Client ID: OLD CHAMPLAIN MILL MW-9A

Parameter	Result	RL	Units	Date	Time	By	Reference
Semi-Volatile Extraction	Completed			06/05/07		O/K	SW3510/3520
Volatiles							
1,1,1,2-Tetrachloroethane	ND	5	ug/L	06/06/07		R/J	SW8260
1,1,1-Trichloroethane	ND	5	ug/L	06/06/07		R/J	SW8260
1,1,2,2-Tetrachloroethane	ND	5	ug/L	06/06/07		R/J	SW8260
1,1,2-Trichloroethane	ND	5	ug/L	06/06/07		R/J	SW8260
1,1-Dichloroethane	ND	5	ug/L	06/06/07		R/J	SW8260
1,1-Dichloroethene	ND	5	ug/L	06/06/07		R/J	SW8260
1,1-Dichloropropene	ND	5	ug/L	06/06/07		R/J	SW8260
1,2,3-Trichlorobenzene	ND	5	ug/L	06/06/07		R/J	SW8260
1,2,3-Trichloropropane	ND	5	ug/L	06/06/07		R/J	SW8260
1,2,4-Trichlorobenzene	ND	5	ug/L	06/06/07		R/J	SW8260
1,2,4-Trimethylbenzene	ND	5	ug/L	06/06/07		R/J	SW8260
1,2-Dibromo-3-chloropropane	ND	5	ug/L	06/06/07		R/J	SW8260
1,2-Dichlorobenzene	ND	5	ug/L	06/06/07		R/J	SW8260
1,2-Dichloroethane	ND	5	ug/L	06/06/07		R/J	SW8260
1,2-Dichloropropane	ND	5	ug/L	06/06/07		R/J	SW8260
1,3,5-Trimethylbenzene	ND	5	ug/L	06/06/07		R/J	SW8260
1,3-Dichlorobenzene	ND	5	ug/L	06/06/07		R/J	SW8260
1,3-Dichloropropane	ND	5	ug/L	06/06/07		R/J	SW8260
1,4-Dichlorobenzene	ND	5	ug/L	06/06/07		R/J	SW8260
2,2-Dichloropropane	ND	5	ug/L	06/06/07		R/J	SW8260
2-Chlorotoluene	ND	5	ug/L	06/06/07		R/J	SW8260
2-Hexanone	ND	25	ug/L	06/06/07		R/J	SW8260
2-Isopropyltoluene	ND	5	ug/L	06/06/07		R/J	SW8260

Client ID: OLD CHAMPLAIN MILL MW-9A

Phoenix I.D.: AJ19147

Parameter	Result	RL	Units	Date	Time	By	Reference
4-Chlorotoluene	ND	5	ug/L	06/06/07		R/J	SW8260
4-Methyl-2-pentanone	ND	25	ug/L	06/06/07		R/J	SW8260
Acetone	ND	50	ug/L	06/06/07		R/J	SW8260
Acrylonitrile	ND	10	ug/L	06/06/07		R/J	SW8260
Benzene	ND	5	ug/L	06/06/07		R/J	SW8260
Bromobenzene	ND	5	ug/L	06/06/07		R/J	SW8260
Bromochloromethane	ND	5	ug/L	06/06/07		R/J	SW8260
Bromodichloromethane	ND	5	ug/L	06/06/07		R/J	SW8260
Bromoform	ND	5	ug/L	06/06/07		R/J	SW8260
Bromomethane	ND	5	ug/L	06/06/07		R/J	SW8260
Carbon Disulfide	ND	5	ug/L	06/06/07		R/J	SW8260
Carbon tetrachloride	ND	5	ug/L	06/06/07		R/J	SW8260
Chlorobenzene	ND	5	ug/L	06/06/07		R/J	SW8260
Chloroethane	ND	5	ug/L	06/06/07		R/J	SW8260
Chloroform	ND	5	ug/L	06/06/07		R/J	SW8260
Chloromethane	ND	5	ug/L	06/06/07		R/J	SW8260
cis-1,2-Dichloroethene	ND	5	ug/L	06/06/07		R/J	SW8260
cis-1,3-Dichloropropene	ND	5	ug/L	06/06/07		R/J	SW8260
Dibromochloromethane	ND	5	ug/L	06/06/07		R/J	SW8260
Dibromoethane	ND	5	ug/L	06/06/07		R/J	SW8260
Dibromomethane	ND	5	ug/L	06/06/07		R/J	SW8260
Dichlorodifluoromethane	ND	5	ug/L	06/06/07		R/J	SW8260
Ethylbenzene	ND	5	ug/L	06/06/07		R/J	SW8260
Hexachlorobutadiene	ND	5	ug/L	06/06/07		R/J	SW8260
Isopropylbenzene	ND	5	ug/L	06/06/07		R/J	SW8260
m&p-Xylene	ND	5	ug/L	06/06/07		R/J	SW8260
Methyl Ethyl Ketone	ND	60	ug/L	06/06/07		R/J	SW8260
Methyl t-butyl ether (MTBE)	ND	10	ug/L	06/06/07		R/J	SW8260
Methylene chloride	10	5	ug/L	06/06/07		R/J	SW8260
n-Butylbenzene	ND	5	ug/L	06/06/07		R/J	SW8260
n-Propylbenzene	ND	5	ug/L	06/06/07		R/J	SW8260
Naphthalene	ND	5	ug/L	06/06/07		R/J	SW8260
o-Xylene	ND	5	ug/L	06/06/07		R/J	SW8260
p-Isopropyltoluene	ND	5	ug/L	06/06/07		R/J	SW8260
sec-Butylbenzene	ND	5	ug/L	06/06/07		R/J	SW8260
Styrene	ND	5	ug/L	06/06/07		R/J	SW8260
tert-Butylbenzene	ND	5	ug/L	06/06/07		R/J	SW8260
Tetrachloroethene	ND	5	ug/L	06/06/07		R/J	SW8260
Tetrahydrofuran (THF)	ND	10	ug/L	06/06/07		R/J	SW8260
Toluene	ND	5	ug/L	06/06/07		R/J	SW8260
Total Xylenes	ND	5	ug/L	06/06/07		R/J	SW8260
trans-1,2-Dichloroethene	ND	5	ug/L	06/06/07		R/J	SW8260
trans-1,3-Dichloropropene	ND	5	ug/L	06/06/07		R/J	SW8260
trans-1,4-dichloro-2-butene	ND	10	ug/L	06/06/07		R/J	SW8260
Trichloroethene	ND	5	ug/L	06/06/07		R/J	SW8260
Trichlorofluoromethane	ND	5	ug/L	06/06/07		R/J	SW8260

Client ID: OLD CHAMPLAIN MILL MW-9A — Phoenix I.D.: AJ19147

Parameter	Result	RL	Units	Date	Time	By	Reference
Trichlorotrifluoroethane	ND	5	ug/L	06/06/07		R/J	SW8260
Vinyl chloride	ND	5	ug/L	06/06/07		R/J	SW8260
QA/QC Surrogates							
% 1,2-dichlorobenzene-d4	101		%	06/06/07		R/J	SW8260
% Bromofluorobenzene	93		%	06/06/07		R/J	SW8260
% Dibromofluoromethane	100		%	06/06/07		R/J	SW8260
% Toluene-d8	97		%	06/06/07		R/J	SW8260
Semivolatiles							
1,2,4-Trichlorobenzene	ND	10.0	ug/L	06/07/07		KCA	E625/SW8270
1,2-Dichlorobenzene	ND	10.0	ug/L	06/07/07		KCA	E625/SW8270
1,2-Diphenylhydrazine	ND	10.0	ug/L	06/07/07		KCA	E625/SW8270
1,3-Dichlorobenzene	ND	10.0	ug/L	06/07/07		KCA	E625/SW8270
1,4-Dichlorobenzene	ND	10.0	ug/L	06/07/07		KCA	E625/SW8270
2,4-Dinitrotoluene	ND	10.0	ug/L	06/07/07		KCA	E625/SW8270
2,6-Dinitrotoluene	ND	10.0	ug/L	06/07/07		KCA	E625/SW8270
2-Chloronaphthalene	ND	10.0	ug/L	06/07/07		KCA	E625/SW8270
2-Methylnaphthalene	ND	10.0	ug/L	06/07/07		KCA	E625/SW8270
2-Nitroaniline	ND	50.0	ug/L	06/07/07		KCA	E625/SW8270
3,3'-Dichlorobenzidine	ND	20.0	ug/L	06/07/07		KCA	E625/SW8270
3-Nitroaniline	ND	50.0	ug/L	06/07/07		KCA	E625/SW8270
4-Bromophenyl phenyl ether	ND	10.0	ug/L	06/07/07		KCA	E625/SW8270
4-Chloroaniline	ND	20.0	ug/L	06/07/07		KCA	E625/SW8270
4-Chlorophenyl phenyl ether	ND	10.0	ug/L	06/07/07		KCA	E625/SW8270
4-Nitroaniline	ND	50.0	ug/L	06/07/07		KCA	E625/SW8270
Acenaphthene	ND	10.0	ug/L	06/07/07		KCA	E625/SW8270
Acenaphthylene	ND	10.0	ug/L	06/07/07		KCA	E625/SW8270
Anthracene	ND	10.0	ug/L	06/07/07		KCA	E625/SW8270
Benzidine	ND	10.0	ug/L	06/07/07		KCA	E625/SW8270
Benzo(a)anthracene	ND	10.0	ug/L	06/07/07		KCA	E625/SW8270
Benzo(a)pyrene	ND	10.0	ug/L	06/07/07		KCA	E625/SW8270
Benzo(b)fluoranthene	ND	10.0	ug/L	06/07/07		KCA	E625/SW8270
Benzo(g,h,i)perylene	ND	10.0	ug/L	06/07/07		KCA	E625/SW8270
Benzo(k)fluoranthene	ND	10.0	ug/L	06/07/07		KCA	E625/SW8270
Benzoic acid	ND	50.0	ug/L	06/07/07		KCA	E625/SW8270
Benzyl alcohol	ND	20.0	ug/L	06/07/07		KCA	E625/SW8270
Benzyl butyl phthalate	ND	10.0	ug/L	06/07/07		KCA	E625/SW8270
Bis(2-chloroethoxy)methane	ND	10.0	ug/L	06/07/07		KCA	E625/SW8270
Bis(2-chloroethyl)ether	ND	10.0	ug/L	06/07/07		KCA	E625/SW8270
Bis(2-chloroisopropyl)ether	ND	10.0	ug/L	06/07/07		KCA	E625/SW8270
Bis(2-ethylhexyl)phthalate	ND	10.0	ug/L	06/07/07		KCA	E625/SW8270
Chrysene	ND	10.0	ug/L	06/07/07		KCA	E625/SW8270
Di-n-butylphthalate	ND	10.0	ug/L	06/07/07		KCA	E625/SW8270
Di-n-octyl phthalate	ND	10.0	ug/L	06/07/07		KCA	E625/SW8270
Dibenz(a,h)anthracene	ND	10.0	ug/L	06/07/07		KCA	E625/SW8270
Dibenzofuran	ND	10.0	ug/L	06/07/07		KCA	E625/SW8270

Client ID: OLD CHAMPLAIN MILL MW-9A Phoenix I.D.: AJ19147

Parameter	Result	RL	Units	Date	Time	By	Reference
Diethyl phthalate	ND	10.0	ug/L	06/07/07		KCA	E625/SW8270
Dimethyl phthalate	ND	10.0	ug/L	06/07/07		KCA	E625/SW8270
Fluoranthene	ND	10.0	ug/L	06/07/07		KCA	E625/SW8270
Fluorene	ND	10.0	ug/L	06/07/07		KCA	E625/SW8270
Hexachlorobenzene	ND	10.0	ug/L	06/07/07		KCA	E625/SW8270
Hexachlorobutadiene	ND	10.0	ug/L	06/07/07		KCA	E625/SW8270
Hexachlorocyclopentadiene	ND	10.0	ug/L	06/07/07		KCA	E625/SW8270
Hexachloroethane	ND	10.0	ug/L	06/07/07		KCA	E625/SW8270
Indeno(1,2,3-c,d)pyrene	ND	10.0	ug/L	06/07/07		KCA	E625/SW8270
Isophorone	ND	10.0	ug/L	06/07/07		KCA	E625/SW8270
N-Nitrosodi-n-propylamine	ND	10.0	ug/L	06/07/07		KCA	E625/SW8270
N-Nitrosodimethylamine	ND	10.0	ug/L	06/07/07		KCA	E625/SW8270
N-Nitrosodiphenylamine	ND	10.0	ug/L	06/07/07		KCA	E625/SW8270
Naphthalene	ND	10.0	ug/L	06/07/07		KCA	E625/SW8270
Nitrobenzene	ND	10.0	ug/L	06/07/07		KCA	E625/SW8270
Phenanthrene	ND	10.0	ug/L	06/07/07		KCA	E625/SW8270
Pyrene	ND	10.0	ug/L	06/07/07		KCA	E625/SW8270

Comments:

If there are any questions regarding this data, please call Phoenix Client Services at extension 200.

ND=Not detected BDL=Below Detection Limit RL=Reporting Limit

Phyllis Shiller

Phyllis Shiller, Laboratory Director
June 08, 2007

PHOENIX

Environmental Laboratories, Inc.
587 East Middle Turnpike, P.O.Box 370, Manchester, CT 06040
Tel. (860) 645-1102 Fax (860) 645-0823

ACCREDITED IN ACCORDANCE WITH nelac

Analysis Report
June 08, 2007

FOR: Attn: Ms. Aimee Gates
CT Male Associates, PC
50 Century Hill Drive
Latham, NY 12110

Sample Information		Custody Information		Date	Time
Matrix:	WATER	Collected by:	BB	05/31/07	14:55
Location Code:	CT-MALE	Received by:	LP	06/02/07	9:00
Rush Request:		Analyzed by:	see "By" below		
P.O.#:	066448				

SDG I.D.: GAJ19140
Phoenix I.D.: AJ19148

Laboratory Data

Client ID: OLD CHAMPLAIN MILL MW-6A

Parameter	Result	RL	Units	Date	Time	By	Reference
Semi-Volatile Extraction	Completed			06/05/07		O/K	SW3510/3520
Volatiles							
1,1,1,2-Tetrachloroethane	ND	5	ug/L	06/06/07		R/J	SW8260
1,1,1-Trichloroethane	ND	5	ug/L	06/06/07		R/J	SW8260
1,1,2,2-Tetrachloroethane	ND	5	ug/L	06/06/07		R/J	SW8260
1,1,2-Trichloroethane	ND	5	ug/L	06/06/07		R/J	SW8260
1,1-Dichloroethane	ND	5	ug/L	06/06/07		R/J	SW8260
1,1-Dichloroethene	ND	5	ug/L	06/06/07		R/J	SW8260
1,1-Dichloropropene	ND	5	ug/L	06/06/07		R/J	SW8260
1,2,3-Trichlorobenzene	ND	5	ug/L	06/06/07		R/J	SW8260
1,2,3-Trichloropropane	ND	5	ug/L	06/06/07		R/J	SW8260
1,2,4-Trichlorobenzene	ND	5	ug/L	06/06/07		R/J	SW8260
1,2,4-Trimethylbenzene	ND	5	ug/L	06/06/07		R/J	SW8260
1,2-Dibromo-3-chloropropane	ND	5	ug/L	06/06/07		R/J	SW8260
1,2-Dichlorobenzene	ND	5	ug/L	06/06/07		R/J	SW8260
1,2-Dichloroethane	ND	5	ug/L	06/06/07		R/J	SW8260
1,2-Dichloropropane	ND	5	ug/L	06/06/07		R/J	SW8260
1,3,5-Trimethylbenzene	ND	5	ug/L	06/06/07		R/J	SW8260
1,3-Dichlorobenzene	ND	5	ug/L	06/06/07		R/J	SW8260
1,3-Dichloropropane	ND	5	ug/L	06/06/07		R/J	SW8260
1,4-Dichlorobenzene	ND	5	ug/L	06/06/07		R/J	SW8260
2,2-Dichloropropane	ND	5	ug/L	06/06/07		R/J	SW8260
2-Chlorotoluene	ND	5	ug/L	06/06/07		R/J	SW8260
2-Hexanone	ND	25	ug/L	06/06/07		R/J	SW8260
2-Isopropyltoluene	ND	5	ug/L	06/06/07		R/J	SW8260

Client ID: OLD CHAMPLAIN MILL MW-6A

Phoenix I.D.: AJ19148

Parameter	Result	RL	Units	Date	Time	By	Reference
-Chlorotoluene	ND	5	ug/L	06/06/07		R/J	SW8260
-Methyl-2-pentanone	ND	25	ug/L	06/06/07		R/J	SW8260
Acetone	ND	50	ug/L	06/06/07		R/J	SW8260
Acrylonitrile	ND	10	ug/L	06/06/07		R/J	SW8260
Benzene	ND	5	ug/L	06/06/07		R/J	SW8260
Bromobenzene	ND	5	ug/L	06/06/07		R/J	SW8260
Bromochloromethane	ND	5	ug/L	06/06/07		R/J	SW8260
Bromodichloromethane	ND	5	ug/L	06/06/07		R/J	SW8260
Bromoform	ND	5	ug/L	06/06/07		R/J	SW8260
Bromomethane	ND	5	ug/L	06/06/07		R/J	SW8260
Carbon Disulfide	ND	5	ug/L	06/06/07		R/J	SW8260
Carbon tetrachloride	ND	5	ug/L	06/06/07		R/J	SW8260
Chlorobenzene	ND	5	ug/L	06/06/07		R/J	SW8260
Chloroethane	ND	5	ug/L	06/06/07		R/J	SW8260
Chloroform	ND	5	ug/L	06/06/07		R/J	SW8260
Chloromethane	ND	5	ug/L	06/06/07		R/J	SW8260
cis-1,2-Dichloroethene	160	5	ug/L	06/06/07		R/J	SW8260
cis-1,3-Dichloropropene	ND	5	ug/L	06/06/07		R/J	SW8260
Dibromochloromethane	ND	5	ug/L	06/06/07		R/J	SW8260
Dibromoethane	ND	5	ug/L	06/06/07		R/J	SW8260
Dibromomethane	ND	5	ug/L	06/06/07		R/J	SW8260
Dichlorodifluoromethane	ND	5	ug/L	06/06/07		R/J	SW8260
Ethylbenzene	ND	5	ug/L	06/06/07		R/J	SW8260
Hexachlorobutadiene	ND	5	ug/L	06/06/07		R/J	SW8260
Isopropylbenzene	ND	5	ug/L	06/06/07		R/J	SW8260
m&p-Xylene	ND	5	ug/L	06/06/07		R/J	SW8260
Methyl Ethyl Ketone	ND	60	ug/L	06/06/07		R/J	SW8260
Methyl t-butyl ether (MTBE)	ND	10	ug/L	06/06/07		R/J	SW8260
Methylene chloride	11	5	ug/L	06/06/07		R/J	SW8260
n-Butylbenzene	ND	5	ug/L	06/06/07		R/J	SW8260
n-Propylbenzene	ND	5	ug/L	06/06/07		R/J	SW8260
Naphthalene	ND	5	ug/L	06/06/07		R/J	SW8260
o-Xylene	ND	5	ug/L	06/06/07		R/J	SW8260
p-Isopropyltoluene	ND	5	ug/L	06/06/07		R/J	SW8260
sec-Butylbenzene	ND	5	ug/L	06/06/07		R/J	SW8260
Styrene	ND	5	ug/L	06/06/07		R/J	SW8260
tert-Butylbenzene	ND	5	ug/L	06/06/07		R/J	SW8260
Tetrachloroethene	ND	5	ug/L	06/06/07		R/J	SW8260
Tetrahydrofuran (THF)	ND	10	ug/L	06/06/07		R/J	SW8260
Toluene	ND	5	ug/L	06/06/07		R/J	SW8260
Total Xylenes	ND	5	ug/L	06/06/07		R/J	SW8260
trans-1,2-Dichloroethene	ND	5	ug/L	06/06/07		R/J	SW8260
trans-1,3-Dichloropropene	ND	5	ug/L	06/06/07		R/J	SW8260
trans-1,4-dichloro-2-butene	ND	10	ug/L	06/06/07		R/J	SW8260
Trichloroethene	140	5	ug/L	06/06/07		R/J	SW8260
Trichlorofluoromethane	ND	5	ug/L	06/06/07		R/J	SW8260

Client ID: OLD CHAMPLAIN MILL MW-6A — Phoenix I.D.: AJ19148

Parameter	Result	RL	Units	Date	Time	By	Reference
Trichlorotrifluoroethane	ND	5	ug/L	06/06/07		R/J	SW8260
Vinyl chloride	9.4	5	ug/L	06/06/07		R/J	SW8260
QA/QC Surrogates							
% 1,2-dichlorobenzene-d4	99		%	06/06/07		R/J	SW8260
% Bromofluorobenzene	92		%	06/06/07		R/J	SW8260
% Dibromofluoromethane	99		%	06/06/07		R/J	SW8260
% Toluene-d8	95		%	06/06/07		R/J	SW8260
Semivolatiles							
1,2,4-Trichlorobenzene	ND	10.0	ug/L	06/07/07		KCA	E625/SW8270
1,2-Dichlorobenzene	ND	10.0	ug/L	06/07/07		KCA	E625/SW8270
1,2-Diphenylhydrazine	ND	10.0	ug/L	06/07/07		KCA	E625/SW8270
1,3-Dichlorobenzene	ND	10.0	ug/L	06/07/07		KCA	E625/SW8270
1,4-Dichlorobenzene	ND	10.0	ug/L	06/07/07		KCA	E625/SW8270
2,4-Dinitrotoluene	ND	10.0	ug/L	06/07/07		KCA	E625/SW8270
2,6-Dinitrotoluene	ND	10.0	ug/L	06/07/07		KCA	E625/SW8270
2-Chloronaphthalene	ND	10.0	ug/L	06/07/07		KCA	E625/SW8270
2-Methylnaphthalene	ND	10.0	ug/L	06/07/07		KCA	E625/SW8270
2-Nitroaniline	ND	50.0	ug/L	06/07/07		KCA	E625/SW8270
3,3'-Dichlorobenzidine	ND	20.0	ug/L	06/07/07		KCA	E625/SW8270
3-Nitroaniline	ND	50.0	ug/L	06/07/07		KCA	E625/SW8270
4-Bromophenyl phenyl ether	ND	10.0	ug/L	06/07/07		KCA	E625/SW8270
4-Chloroaniline	ND	20.0	ug/L	06/07/07		KCA	E625/SW8270
4-Chlorophenyl phenyl ether	ND	10.0	ug/L	06/07/07		KCA	E625/SW8270
4-Nitroaniline	ND	50.0	ug/L	06/07/07		KCA	E625/SW8270
Acenaphthene	ND	10.0	ug/L	06/07/07		KCA	E625/SW8270
Acenaphthylene	ND	10.0	ug/L	06/07/07		KCA	E625/SW8270
Anthracene	ND	10.0	ug/L	06/07/07		KCA	E625/SW8270
Benzidine	ND	10.0	ug/L	06/07/07		KCA	E625/SW8270
Benzo(a)anthracene	ND	10.0	ug/L	06/07/07		KCA	E625/SW8270
Benzo(a)pyrene	ND	10.0	ug/L	06/07/07		KCA	E625/SW8270
Benzo(b)fluoranthene	ND	10.0	ug/L	06/07/07		KCA	E625/SW8270
Benzo(g,h,i)perylene	ND	10.0	ug/L	06/07/07		KCA	E625/SW8270
Benzo(k)fluoranthene	ND	10.0	ug/L	06/07/07		KCA	E625/SW8270
Benzoic acid	ND	50.0	ug/L	06/07/07		KCA	E625/SW8270
Benzyl alcohol	ND	20.0	ug/L	06/07/07		KCA	E625/SW8270
Benzyl butyl phthalate	ND	10.0	ug/L	06/07/07		KCA	E625/SW8270
Bis(2-chloroethoxy)methane	ND	10.0	ug/L	06/07/07		KCA	E625/SW8270
Bis(2-chloroethyl)ether	ND	10.0	ug/L	06/07/07		KCA	E625/SW8270
Bis(2-chloroisopropyl)ether	ND	10.0	ug/L	06/07/07		KCA	E625/SW8270
Bis(2-ethylhexyl)phthalate	ND	10.0	ug/L	06/07/07		KCA	E625/SW8270
Chrysene	ND	10.0	ug/L	06/07/07		KCA	E625/SW8270
Di-n-butylphthalate	ND	10.0	ug/L	06/07/07		KCA	E625/SW8270
Di-n-octyl phthalate	ND	10.0	ug/L	06/07/07		KCA	E625/SW8270
Dibenz(a,h)anthracene	ND	10.0	ug/L	06/07/07		KCA	E625/SW8270
Dibenzofuran	ND	10.0	ug/L	06/07/07		KCA	E625/SW8270

Client ID: OLD CHAMPLAIN MILL MW-6A Phoenix I.D.: AJ19148

Parameter	Result	RL	Units	Date	Time	By	Reference
Diethyl phthalate	ND	10.0	ug/L	06/07/07		KCA	E625/SW8270
Dimethyl phthalate	ND	10.0	ug/L	06/07/07		KCA	E625/SW8270
Fluoranthene	ND	10.0	ug/L	06/07/07		KCA	E625/SW8270
Fluorene	ND	10.0	ug/L	06/07/07		KCA	E625/SW8270
Hexachlorobenzene	ND	10.0	ug/L	06/07/07		KCA	E625/SW8270
Hexachlorobutadiene	ND	10.0	ug/L	06/07/07		KCA	E625/SW8270
Hexachlorocyclopentadiene	ND	10.0	ug/L	06/07/07		KCA	E625/SW8270
Hexachloroethane	ND	10.0	ug/L	06/07/07		KCA	E625/SW8270
Indeno(1,2,3-c,d)pyrene	ND	10.0	ug/L	06/07/07		KCA	E625/SW8270
Isophorone	ND	10.0	ug/L	06/07/07		KCA	E625/SW8270
N-Nitrosodi-n-propylamine	ND	10.0	ug/L	06/07/07		KCA	E625/SW8270
N-Nitrosodimethylamine	ND	10.0	ug/L	06/07/07		KCA	E625/SW8270
N-Nitrosodiphenylamine	ND	10.0	ug/L	06/07/07		KCA	E625/SW8270
Naphthalene	ND	10.0	ug/L	06/07/07		KCA	E625/SW8270
Nitrobenzene	ND	10.0	ug/L	06/07/07		KCA	E625/SW8270
Phenanthrene	ND	10.0	ug/L	06/07/07		KCA	E625/SW8270
Pyrene	ND	10.0	ug/L	06/07/07		KCA	E625/SW8270

Comments:

Poor surrogate recovery was observed. The other surrogates associated with this sample were within QA/QC criteria. No further action was necessary.

If there are any questions regarding this data, please call Phoenix Client Services at extension 200.

ND=Not detected BDL=Below Detection Limit RL=Reporting Limit

Phyllis Shiller, Laboratory Director
June 08, 2007

PHOENIX

Environmental Laboratories, Inc.
587 East Middle Turnpike, P.O.Box 370, Manchester, CT 06040
Tel. (860) 645-1102 Fax (860) 645-0823

ACCREDITED IN ACCORDANCE WITH nelac

Analysis Report

June 08, 2007

FOR: Attn: Ms. Aimee Gates
CT Male Associates, PC
50 Century Hill Drive
Latham, NY 12110

Sample Information		Custody Information		Date	Time
Matrix:	WATER	Collected by:	BB	05/31/07	14:55
Location Code:	CT-MALE	Received by:	LP	06/02/07	9:00
Rush Request:		Analyzed by:	see "By" below		
P.O.#:	066448				

SDG I.D.: GAJ19140
Phoenix I.D.: AJ19149

Laboratory Data

Client ID: OLD CHAMPLAIN MILL MW-8A

Parameter	Result	RL	Units	Date	Time	By	Reference
Semi-Volatile Extraction	Completed			06/05/07		O/K	SW3510/3520
Volatiles							
1,1,1,2-Tetrachloroethane	ND	5	ug/L	06/06/07		R/J	SW8260
1,1,1-Trichloroethane	ND	5	ug/L	06/06/07		R/J	SW8260
1,1,2,2-Tetrachloroethane	ND	5	ug/L	06/06/07		R/J	SW8260
1,1,2-Trichloroethane	ND	5	ug/L	06/06/07		R/J	SW8260
1,1-Dichloroethane	ND	5	ug/L	06/06/07		R/J	SW8260
1,1-Dichloroethene	ND	5	ug/L	06/06/07		R/J	SW8260
1,1-Dichloropropene	ND	5	ug/L	06/06/07		R/J	SW8260
1,2,3-Trichlorobenzene	ND	5	ug/L	06/06/07		R/J	SW8260
1,2,3-Trichloropropane	ND	5	ug/L	06/06/07		R/J	SW8260
1,2,4-Trichlorobenzene	ND	5	ug/L	06/06/07		R/J	SW8260
1,2,4-Trimethylbenzene	ND	5	ug/L	06/06/07		R/J	SW8260
1,2-Dibromo-3-chloropropane	ND	5	ug/L	06/06/07		R/J	SW8260
1,2-Dichlorobenzene	ND	5	ug/L	06/06/07		R/J	SW8260
1,2-Dichloroethane	ND	5	ug/L	06/06/07		R/J	SW8260
1,2-Dichloropropane	ND	5	ug/L	06/06/07		R/J	SW8260
1,3,5-Trimethylbenzene	ND	5	ug/L	06/06/07		R/J	SW8260
1,3-Dichlorobenzene	ND	5	ug/L	06/06/07		R/J	SW8260
1,3-Dichloropropane	ND	5	ug/L	06/06/07		R/J	SW8260
1,4-Dichlorobenzene	ND	5	ug/L	06/06/07		R/J	SW8260
2,2-Dichloropropane	ND	5	ug/L	06/06/07		R/J	SW8260
2-Chlorotoluene	ND	5	ug/L	06/06/07		R/J	SW8260
2-Hexanone	ND	25	ug/L	06/06/07		R/J	SW8260
2-Isopropyltoluene	ND	5	ug/L	06/06/07		R/J	SW8260

Client ID: OLD CHAMPLAIN MILL MW-8A | Phoenix I.D.: AJ19149

Parameter	Result	RL	Units	Date	Time	By	Reference
4-Chlorotoluene	ND	5	ug/L	06/06/07		R/J	SW8260
4-Methyl-2-pentanone	ND	25	ug/L	06/06/07		R/J	SW8260
Acetone	ND	50	ug/L	06/06/07		R/J	SW8260
Acrylonitrile	ND	10	ug/L	06/06/07		R/J	SW8260
Benzene	ND	5	ug/L	06/06/07		R/J	SW8260
Bromobenzene	ND	5	ug/L	06/06/07		R/J	SW8260
Bromochloromethane	ND	5	ug/L	06/06/07		R/J	SW8260
Bromodichloromethane	ND	5	ug/L	06/06/07		R/J	SW8260
Bromoform	ND	5	ug/L	06/06/07		R/J	SW8260
Bromomethane	ND	5	ug/L	06/06/07		R/J	SW8260
Carbon Disulfide	ND	5	ug/L	06/06/07		R/J	SW8260
Carbon tetrachloride	ND	5	ug/L	06/06/07		R/J	SW8260
Chlorobenzene	ND	5	ug/L	06/06/07		R/J	SW8260
Chloroethane	ND	5	ug/L	06/06/07		R/J	SW8260
Chloroform	ND	5	ug/L	06/06/07		R/J	SW8260
Chloromethane	ND	5	ug/L	06/06/07		R/J	SW8260
cis-1,2-Dichloroethene	12	5	ug/L	06/06/07		R/J	SW8260
cis-1,3-Dichloropropene	ND	5	ug/L	06/06/07		R/J	SW8260
Dibromochloromethane	ND	5	ug/L	06/06/07		R/J	SW8260
Dibromoethane	ND	5	ug/L	06/06/07		R/J	SW8260
Dibromomethane	ND	5	ug/L	06/06/07		R/J	SW8260
Dichlorodifluoromethane	ND	5	ug/L	06/06/07		R/J	SW8260
Ethylbenzene	ND	5	ug/L	06/06/07		R/J	SW8260
Hexachlorobutadiene	ND	5	ug/L	06/06/07		R/J	SW8260
Isopropylbenzene	ND	5	ug/L	06/06/07		R/J	SW8260
m&p-Xylene	ND	5	ug/L	06/06/07		R/J	SW8260
Methyl Ethyl Ketone	ND	60	ug/L	06/06/07		R/J	SW8260
Methyl t-butyl ether (MTBE)	ND	10	ug/L	06/06/07		R/J	SW8260
Methylene chloride	11	5	ug/L	06/06/07		R/J	SW8260
n-Butylbenzene	ND	5	ug/L	06/06/07		R/J	SW8260
n-Propylbenzene	ND	5	ug/L	06/06/07		R/J	SW8260
Naphthalene	ND	5	ug/L	06/06/07		R/J	SW8260
o-Xylene	ND	5	ug/L	06/06/07		R/J	SW8260
p-Isopropyltoluene	ND	5	ug/L	06/06/07		R/J	SW8260
sec-Butylbenzene	ND	5	ug/L	06/06/07		R/J	SW8260
Styrene	ND	5	ug/L	06/06/07		R/J	SW8260
tert-Butylbenzene	ND	5	ug/L	06/06/07		R/J	SW8260
Tetrachloroethene	ND	5	ug/L	06/06/07		R/J	SW8260
Tetrahydrofuran (THF)	ND	10	ug/L	06/06/07		R/J	SW8260
Toluene	ND	5	ug/L	06/06/07		R/J	SW8260
Total Xylenes	ND	5	ug/L	06/06/07		R/J	SW8260
trans-1,2-Dichloroethene	ND	5	ug/L	06/06/07		R/J	SW8260
trans-1,3-Dichloropropene	ND	5	ug/L	06/06/07		R/J	SW8260
trans-1,4-dichloro-2-butene	ND	10	ug/L	06/06/07		R/J	SW8260
Trichloroethene	ND	5	ug/L	06/06/07		R/J	SW8260
Trichlorofluoromethane	ND	5	ug/L	06/06/07		R/J	SW8260

Client ID: OLD CHAMPLAIN MILL MW-8A — Phoenix I.D.: AJ19149

Parameter	Result	RL	Units	Date	Time	By	Reference
Trichlorotrifluoroethane	ND	5	ug/L	06/06/07		R/J	SW8260
Vinyl chloride	ND	5	ug/L	06/06/07		R/J	SW8260
QA/QC Surrogates							
% 1,2-dichlorobenzene-d4	101		%	06/06/07		R/J	SW8260
% Bromofluorobenzene	92		%	06/06/07		R/J	SW8260
% Dibromofluoromethane	102		%	06/06/07		R/J	SW8260
% Toluene-d8	95		%	06/06/07		R/J	SW8260
Semivolatiles							
1,2,4-Trichlorobenzene	ND	10.0	ug/L	06/07/07		KCA	E625/SW8270
1,2-Dichlorobenzene	ND	10.0	ug/L	06/07/07		KCA	E625/SW8270
1,2-Diphenylhydrazine	ND	10.0	ug/L	06/07/07		KCA	E625/SW8270
1,3-Dichlorobenzene	ND	10.0	ug/L	06/07/07		KCA	E625/SW8270
1,4-Dichlorobenzene	ND	10.0	ug/L	06/07/07		KCA	E625/SW8270
2,4-Dinitrotoluene	ND	10.0	ug/L	06/07/07		KCA	E625/SW8270
2,6-Dinitrotoluene	ND	10.0	ug/L	06/07/07		KCA	E625/SW8270
2-Chloronaphthalene	ND	10.0	ug/L	06/07/07		KCA	E625/SW8270
2-Methylnaphthalene	ND	10.0	ug/L	06/07/07		KCA	E625/SW8270
2-Nitroaniline	ND	50.0	ug/L	06/07/07		KCA	E625/SW8270
3,3'-Dichlorobenzidine	ND	20.0	ug/L	06/07/07		KCA	E625/SW8270
3-Nitroaniline	ND	50.0	ug/L	06/07/07		KCA	E625/SW8270
4-Bromophenyl phenyl ether	ND	10.0	ug/L	06/07/07		KCA	E625/SW8270
4-Chloroaniline	ND	20.0	ug/L	06/07/07		KCA	E625/SW8270
4-Chlorophenyl phenyl ether	ND	10.0	ug/L	06/07/07		KCA	E625/SW8270
4-Nitroaniline	ND	50.0	ug/L	06/07/07		KCA	E625/SW8270
Acenaphthene	ND	10.0	ug/L	06/07/07		KCA	E625/SW8270
Acenaphthylene	ND	10.0	ug/L	06/07/07		KCA	E625/SW8270
Anthracene	ND	10.0	ug/L	06/07/07		KCA	E625/SW8270
Benzidine	ND	10.0	ug/L	06/07/07		KCA	E625/SW8270
Benzo(a)anthracene	ND	10.0	ug/L	06/07/07		KCA	E625/SW8270
Benzo(a)pyrene	ND	10.0	ug/L	06/07/07		KCA	E625/SW8270
Benzo(b)fluoranthene	ND	10.0	ug/L	06/07/07		KCA	E625/SW8270
Benzo(g,h,i)perylene	ND	10.0	ug/L	06/07/07		KCA	E625/SW8270
Benzo(k)fluoranthene	ND	10.0	ug/L	06/07/07		KCA	E625/SW8270
Benzoic acid	ND	50.0	ug/L	06/07/07		KCA	E625/SW8270
Benzyl alcohol	ND	20.0	ug/L	06/07/07		KCA	E625/SW8270
Benzyl butyl phthalate	ND	10.0	ug/L	06/07/07		KCA	E625/SW8270
Bis(2-chloroethoxy)methane	ND	10.0	ug/L	06/07/07		KCA	E625/SW8270
Bis(2-chloroethyl)ether	ND	10.0	ug/L	06/07/07		KCA	E625/SW8270
Bis(2-chloroisopropyl)ether	ND	10.0	ug/L	06/07/07		KCA	E625/SW8270
Bis(2-ethylhexyl)phthalate	ND	10.0	ug/L	06/07/07		KCA	E625/SW8270
Chrysene	ND	10.0	ug/L	06/07/07		KCA	E625/SW8270
Di-n-butylphthalate	ND	10.0	ug/L	06/07/07		KCA	E625/SW8270
Di-n-octyl phthalate	ND	10.0	ug/L	06/07/07		KCA	E625/SW8270
Dibenz(a,h)anthracene	ND	10.0	ug/L	06/07/07		KCA	E625/SW8270
Dibenzofuran	ND	10.0	ug/L	06/07/07		KCA	E625/SW8270

Client ID: OLD CHAMPLAIN MILL MW-8A Phoenix I.D.: AJ19149

Parameter	Result	RL	Units	Date	Time	By	Reference
Diethyl phthalate	ND	10.0	ug/L	06/07/07		KCA	E625/SW8270
Dimethyl phthalate	ND	10.0	ug/L	06/07/07		KCA	E625/SW8270
Fluoranthene	ND	10.0	ug/L	06/07/07		KCA	E625/SW8270
Fluorene	ND	10.0	ug/L	06/07/07		KCA	E625/SW8270
Hexachlorobenzene	ND	10.0	ug/L	06/07/07		KCA	E625/SW8270
Hexachlorobutadiene	ND	10.0	ug/L	06/07/07		KCA	E625/SW8270
Hexachlorocyclopentadiene	ND	10.0	ug/L	06/07/07		KCA	E625/SW8270
Hexachloroethane	ND	10.0	ug/L	06/07/07		KCA	E625/SW8270
Indeno(1,2,3-c,d)pyrene	ND	10.0	ug/L	06/07/07		KCA	E625/SW8270
Isophorone	ND	10.0	ug/L	06/07/07		KCA	E625/SW8270
N-Nitrosodi-n-propylamine	ND	10.0	ug/L	06/07/07		KCA	E625/SW8270
N-Nitrosodimethylamine	ND	10.0	ug/L	06/07/07		KCA	E625/SW8270
N-Nitrosodiphenylamine	ND	10.0	ug/L	06/07/07		KCA	E625/SW8270
Naphthalene	ND	10.0	ug/L	06/07/07		KCA	E625/SW8270
Nitrobenzene	ND	10.0	ug/L	06/07/07		KCA	E625/SW8270
Phenanthrene	ND	10.0	ug/L	06/07/07		KCA	E625/SW8270
Pyrene	ND	10.0	ug/L	06/07/07		KCA	E625/SW8270

Comments:

Poor surrogate recovery was observed. The other surrogates associated with this sample were within QA/QC criteria. No further action was necessary.

If there are any questions regarding this data, please call Phoenix Client Services at extension 200.

ND=Not detected BDL=Below Detection Limit RL=Reporting Limit

Phyllis Shiller

Phyllis Shiller, Laboratory Director
June 08, 2007

PHOENIX

Environmental Laboratories, Inc.
587 East Middle Turnpike, P.O.Box 370, Manchester, CT 06040
Tel. (860) 645-1102 Fax (860) 645-0823

QA/QC Report

June 08, 2007

QA/QC Data

SDG I.D.: GAJ19140

Parameter	Blank	LCS %	LCSD %	LCS RPD	MS Rec %	MS Dup Rec %	RPD
QA/QC Batch 77099, Sample No: AJ17567 (AJ19145, AJ19146, AJ19147, AJ19148, AJ19149)							
Polynuclear Aromatic HC							
2-Methylnaphthalene	ND	90	97	7.5			
Acenaphthene	ND	88	94	6.6			
Acenaphthylene	ND	90	95	5.4			
Anthracene	ND	93	97	4.2			
Benz(a)anthracene	ND	103	103	0.0			
Benzo(a)pyrene	ND	97	97	0.0			
Benzo(b)fluoranthene	ND	114	108	5.4			
Benzo(ghi)perylene	ND	59	69	15.6			
Benzo(k)fluoranthene	ND	102	107	4.8			
rsene	ND	101	102	1.0			
nz(a,h)anthracene	ND	73	81	10.4			
Fluoranthene	ND	95	94	1.1			
Fluorene	ND	95	100	5.1			
Indeno(1,2,3-cd)pyrene	ND	69	76	9.7			
Naphthalene	ND	86	92	6.7			
Phenanthrene	ND	95	99	4.1			
Pyrene	ND	92	92	0.0			
% 2-Fluorobiphenyl	79	85	90	5.7			
% Nitrobenzene-d5	64	76	81	6.4			
% Terphenyl-d14	39	91	90	1.1			

Comment: A LCS and LCS Duplicate were performed instead of a matrix spike and matrix spike duplicate.

QA/QC Batch 77544, Sample No: AJ19257 (AJ19141, AJ19142, AJ19143, aj19144, aj19145, AJ19146, AJ19147, AJ19148, AJ19149)

Volatiles

1,1,1,2-Tetrachloroethane	ND	99	103	4.0	102
1,1,1-Trichloroethane	ND	95	95	0.0	95
1,1,2,2-Tetrachloroethane	ND	90	89	1.1	92
1,1,2-Trichloroethane	ND	94	95	1.1	98
1,1-Dichloroethane	ND	92	94	2.2	91
Dichloroethene	ND	97	96	1.0	97
Dichloropropene	ND	98	100	2.0	98
1,2,3-Trichlorobenzene	ND	98	97	1.0	82

QA/QC Data

SDG I.D.: GAJ19140

ameter	Blank	LCS %	LCSD %	LCS RPD	MS Rec %	MS Dup Rec %	RPD
1,2,3-Trichloropropane	ND	106	101	4.8	94		
1,2,4-Trichlorobenzene	ND	92	92	0.0	76		
1,2,4-Trimethylbenzene	ND	97	96	1.0	91		
1,2-Dibromo-3-chloropropane	ND	97	96	1.0	91		
1,2-Dichlorobenzene	ND	100	97	3.0	92		
1,2-Dichloroethane	ND	92	95	3.2	94		
1,2-Dichloropropane	ND	93	95	2.1	97		
1,3,5-Trimethylbenzene	ND	99	98	1.0	92		
1,3-Dichlorobenzene	ND	100	97	3.0	90		
1,3-Dichloropropane	ND	94	97	3.1	94		
1,4-Dichlorobenzene	ND	100	99	1.0	90		
2,2-Dichloropropane	ND	88	91	3.4	85		
2-Chlorotoluene	ND	101	96	5.1	93		
4-Chlorotoluene	ND	100	98	2.0	92		
Benzene	ND	95	96	1.0	96		
Bromobenzene	ND	102	100	2.0	96		
Bromochloromethane	ND	93	96	3.2	96		
Bromodichloromethane	ND	95	97	2.1	100		
Bromoform	ND	98	104	5.9	102		
momethane	ND	107	118	9.8	91		
Carbon tetrachloride	ND	99	101	2.0	100		
Chlorobenzene	ND	98	101	3.0	94		
Chloroethane	ND	102	101	1.0	93		
Chloroform	ND	95	95	0.0	97		
Chloromethane	ND	106	106	0.0	88		
cis-1,2-Dichloroethene	ND	94	95	1.1	94		
cis-1,3-Dichloropropene	ND	92	93	1.1	93		
Dibromochloromethane	ND	101	104	2.9	102		
Dibromoethane	ND	97	97	0.0	97		
Dibromomethane	ND	95	94	1.1	99		
Dichlorodifluoromethane	ND	124	124	0.0	92		
Ethylbenzene	ND	97	102	5.0	96		
Hexachlorobutadiene	ND	97	93	4.2	91		
Isopropylbenzene	ND	110	107	2.8	95		
m&p-Xylene	ND	97	102	5.0	95		
Methyl Ethyl Ketone	ND						
Methyl t-Butyl Ether (MTBE)	ND	94	99	5.2	90		
Methylene chloride	ND	76	79	3.9	90		
n-Butylbenzene	ND	94	94	0.0	84		
ropylbenzene	ND	104	100	3.9	95		
phthalene	ND	98	97	1.0	88		
o-Xylene	ND	98	103	5.0	95		

QA/QC Data

SDG I.D.: GAJ19140

ameter	Blank	LCS %	LCSD %	LCS RPD	MS Rec %	MS Dup Rec %	RPD
p-Isopropyltoluene	ND	102	101	1.0	90		
sec-Butylbenzene	ND	93	91	2.2	93		
Styrene	ND	98	101	3.0	95		
tert-Butylbenzene	ND	103	99	4.0	97		
Tetrachloroethene	ND	100	104	3.9	95		
Toluene	ND	96	98	2.1	97		
Total Xylenes	ND						
trans-1,2-Dichloroethene	ND	96	97	1.0	95		
trans-1,3-Dichloropropene	ND	92	90	2.2	93		
Trichloroethene	ND	101	101	0.0	97		
Trichlorofluoromethane	ND	109	109	0.0	97		
Vinyl chloride	ND	109	109	0.0	95		
% 1,2-dichlorobenzene-d4	95	102	96	6.1	99		
% Bromofluorobenzene	90	102	96	6.1	96		
% Dibromofluoromethane	98	94	98	4.2	98		
% Toluene-d8	97	97	97	0.0	101		
QA/QC Batch 77543, Sample No: AJ19437 (AJ19140)							
Volatiles							
,2-Tetrachloroethane	ND	102	103	1.0	96	101	5.1
-Trichloroethane	ND	95	93	2.1	91	95	4.3
1,1,2,2-Tetrachloroethane	ND	93	94	1.1	89	95	6.5
1,1,2-Trichloroethane	ND	95	95	0.0	92	96	4.3
1,1-Dichloroethane	ND	95	92	3.2	88	92	4.4
1,1-Dichloroethene	ND	95	94	1.1	94	95	1.1
1,1-Dichloropropene	ND	98	100	2.0	93	98	5.2
1,2,3-Trichlorobenzene	ND	104	105	1.0	87	98	11.9
1,2,3-Trichloropropane	ND	109	109	0.0	89	96	7.6
1,2,4-Trichlorobenzene	ND	100	106	5.8	86	95	9.9
1,2,4-Trimethylbenzene	ND	96	97	1.0	91	97	6.4
1,2-Dibromo-3-chloropropane	ND	102	100	2.0	83	94	12.4
1,2-Dichlorobenzene	ND	100	101	1.0	92	99	7.3
1,2-Dichloroethane	ND	96	96	0.0	88	92	4.4
1,2-Dichloropropane	ND	95	96	1.0	90	92	2.2
1,3,5-Trimethylbenzene	ND	96	99	3.1	91	98	7.4
1,3-Dichlorobenzene	ND	99	101	2.0	90	97	7.5
1,3-Dichloropropane	ND	99	97	2.0	89	97	8.6
1,4-Dichlorobenzene	ND	101	103	2.0	93	98	5.2
2,2-Dichloropropane	ND	96	92	4.3	86	89	3.4
2-Chlorotoluene	ND	96	100	4.1	93	98	5.2
hlorotoluene	ND	100	103	3.0	93	98	5.2
Benzene	ND	93	96	3.2	92	95	3.2

QA/QC Data

SDG I.D.: GAJ19140

Parameter	Blank	LCS %	LCSD %	LCS RPD	MS Rec %	MS Dup Rec %	RPD
Bromobenzene	ND	99	100	1.0	93	101	8.2
Bromochloromethane	ND	97	97	0.0	91	97	6.4
Bromodichloromethane	ND	95	94	1.1	92	96	4.3
Bromoform	ND	107	104	2.8	96	106	9.9
Bromomethane	ND	105	105	0.0	89	99	10.6
Carbon tetrachloride	ND	98	97	1.0	94	98	4.2
Chlorobenzene	ND	99	100	1.0	93	101	8.2
Chloroethane	ND	99	103	4.0	93	94	1.1
Chloroform	ND	95	95	0.0	89	93	4.4
Chloromethane	ND	108	105	2.8	87	89	2.3
cis-1,2-Dichloroethene	ND	95	95	0.0	92	94	2.2
cis-1,3-Dichloropropene	ND	96	97	1.0	90	94	4.3
Dibromochloromethane	ND	103	106	2.9	98	105	6.9
Dibromoethane	ND	100	100	0.0	95	98	3.1
Dibromomethane	ND	98	98	0.0	91	93	2.2
Dichlorodifluoromethane	ND	118	118	0.0	84	91	8.0
Ethylbenzene	ND	98	100	2.0	94	102	8.2
Hexachlorobutadiene	ND	95	97	2.1	92	98	6.3
Isopropylbenzene	ND	106	106	0.0	95	101	6.1
-Xylene	ND	100	100	0.0	95	101	6.1
Methyl Ethyl Ketone	ND						
Methyl t-Butyl Ether (MTBE)	ND	93	83	11.4	95	101	6.1
Methylene chloride	ND	89	97	8.6	846	882	4.2
n-Butylbenzene	ND	96	98	2.1	88	95	7.7
n-Propylbenzene	ND	98	101	3.0	94	100	6.2
Naphthalene	ND	102	106	3.8	89	101	12.6
o-Xylene	ND	100	101	1.0	93	102	9.2
p-Isopropyltoluene	ND	98	102	4.0	92	98	6.3
sec-Butylbenzene	ND	89	91	2.2	92	99	7.3
Styrene	ND	101	100	1.0	92	100	8.3
tert-Butylbenzene	ND	96	99	3.1	94	99	5.2
Tetrachloroethene	ND	100	103	3.0	94	102	8.2
Toluene	ND	95	95	0.0	92	95	3.2
Total Xylenes	ND						
trans-1,2-Dichloroethene	ND	96	96	0.0	93	95	2.1
trans-1,3-Dichloropropene	ND	97	97	0.0	90	93	3.3
Trichloroethene	ND	100	100	0.0	94	99	5.2
Trichlorofluoromethane	ND	107	107	0.0	93	96	3.2
Vinyl chloride	ND	107	105	1.9	90	94	4.3
2-dichlorobenzene-d4	100	97	99	2.0	94	97	3.1
romofluorobenzene	93	97	99	2.0	96	97	1.0
% Dibromofluoromethane	97	103	96	7.0	99	98	1.0

QA/QC Data

SDG I.D.: GAJ19140

Parameter	Blank	LCS %	LCSD %	LCS RPD	MS Rec %	MS Dup Rec %	RPD
% Toluene-d8	98	98	97	1.0	97	97	0.0
QA/QC Batch 77650, Sample No: AJ19597 (aj19144, aj19145)							
Volatiles							
1,1,1,2-Tetrachloroethane	ND	105	107	1.9	95	100	5.1
1,1,1-Trichloroethane	ND	98	100	2.0	92	93	1.1
1,1,2,2-Tetrachloroethane	ND	90	94	4.3	92	91	1.1
1,1,2-Trichloroethane	ND	94	94	0.0	93	97	4.2
1,1-Dichloroethane	ND	94	94	0.0	87	89	2.3
1,1-Dichloroethene	ND	97	98	1.0	94	95	1.1
1,1-Dichloropropene	ND	101	106	4.8	94	97	3.1
1,2,3-Trichlorobenzene	ND	100	103	3.0	91	92	1.1
1,2,3-Trichloropropane	ND	102	107	4.8	94	93	1.1
1,2,4-Trichlorobenzene	ND	100	104	3.9	91	92	1.1
1,2,4-Trimethylbenzene	ND	99	102	3.0	95	95	0.0
1,2-Dibromo-3-chloropropane	ND	92	100	8.3	86	92	6.7
1,2-Dichlorobenzene	ND	101	106	4.8	95	93	2.1
1,2-Dichloroethane	ND	94	96	2.1	92	94	2.2
1,2-Dichloropropane	ND	94	95	1.1	90	93	3.3
[illegible]-Trimethylbenzene	ND	99	103	4.0	96	95	1.0
[illegible]Dichlorobenzene	ND	103	105	1.9	94	97	3.1
1,3-Dichloropropane	ND	97	98	1.0	90	94	4.3
1,4-Dichlorobenzene	ND	104	105	1.0	98	97	1.0
2,2-Dichloropropane	ND	97	98	1.0	90	94	4.3
2-Chlorotoluene	ND	101	103	2.0	95	95	0.0
4-Chlorotoluene	ND	104	106	1.9	98	95	3.1
Benzene	ND	95	98	3.1	92	94	2.2
Bromobenzene	ND	102	104	1.9	96	96	0.0
Bromochloromethane	ND	98	97	1.0	90	94	4.3
Bromodichloromethane	ND	97	100	3.0	95	97	2.1
Bromoform	ND	103	107	3.8	95	101	6.1
Bromomethane	ND	101	105	3.9	90	96	6.5
Carbon tetrachloride	ND	101	105	3.9	97	101	4.0
Chlorobenzene	ND	103	104	1.0	92	97	5.3
Chloroethane	ND	100	101	1.0	91	91	0.0
Chloroform	ND	96	97	1.0	91	92	1.1
Chloromethane	ND	98	102	4.0	84	83	1.2
cis-1,2-Dichloroethene	ND	94	96	2.1	90	91	1.1
cis-1,3-Dichloropropene	ND	97	98	1.0	93	98	5.2
Dibromochloromethane	ND	108	108	0.0	96	100	4.1
[illegible]romoethane	ND	96	101	5.1	95	98	3.1
Dibromomethane	ND	94	98	4.2	94	97	3.1

QA/QC Data

SDG I.D.: GAJ19140

ameter	Blank	LCS %	LCSD %	LCS RPD	MS Rec %	MS Dup Rec %	RPD
Dichlorodifluoromethane	ND	108	112	3.6	91	91	0.0
Ethylbenzene	ND	106	104	1.9	92	99	7.3
Hexachlorobutadiene	ND	94	103	9.1	95	96	1.0
Isopropylbenzene	ND	110	111	0.9	97	95	2.1
m&p-Xylene	ND	105	106	0.9	94	99	5.2
Methyl Ethyl Ketone	ND						
Methyl t-Butyl Ether (MTBE)	ND	91	91	0.0	80	89	10.7
Methylene chloride	ND	74	75	1.3	71	72	1.4
n-Butylbenzene	ND	99	102	3.0	92	92	0.0
n-Propylbenzene	ND	102	106	3.8	97	95	2.1
Naphthalene	ND	96	101	5.1	87	91	4.5
o-Xylene	ND	103	106	2.9	92	98	6.3
p-Isopropyltoluene	ND	104	107	2.8	95	95	0.0
sec-Butylbenzene	ND	94	96	2.1	95	94	1.1
Styrene	ND	102	103	1.0	91	98	7.4
tert-Butylbenzene	ND	102	105	2.9	97	95	2.1
Tetrachloroethene	ND	106	108	1.9	94	100	6.2
Toluene	ND	97	99	2.0	93	98	5.2
Total Xylenes	ND						
s-1,2-Dichloroethene	ND	98	98	0.0	93	95	2.1
trans-1,3-Dichloropropene	ND	97	99	2.0	94	98	4.2
Trichloroethene	ND	98	103	5.0	93	100	7.3
Trichlorofluoromethane	ND	110	111	0.9	96	97	1.0
Vinyl chloride	ND	106	107	0.9	90	91	1.1
% 1,2-dichlorobenzene-d4	99	95	98	3.1	100	96	4.1
% Bromofluorobenzene	89	95	98	3.1	95	97	2.1
% Dibromofluoromethane	93	99	96	3.1	101	95	6.1
% Toluene-d8	98	97	97	0.0	99	101	2.0

If there are any questions regarding this data, please call Phoenix Client Services at extension 200.

RPD - Relative Percent Difference
LCS - Laboratory Control Sample
LCSD - Laboratory Control Sample Duplicate
MS - Matrix Spike
MS Dup - Matrix Spike Duplicate
NC - No Criteria

Phyllis Shiller

Phyllis Shiller, Laboratory Director
June 08, 2007

PHOENIX
Environmental Laboratories, Inc.

CHAIN OF CUSTODY RECORD

587 East Middle Turnpike, P.O. Box 370, Manchester, CT 06040
Email: service@phoenixlabs.com Fax (860) 645-0823
Client Services (860) 645-8726

Temp 10 of 1

Data Delivery (check one):
☐ Fax #: _____
☒ Email: _____
Format: ☐ Excel ☒ Pdf ☐ Gis Key

Customer: CT Male Associates
Address: 50 Century Hill Dr
Latham, NY 12110

Project: Old Champlain Mill
Report to: Aimee Cousins
Invoice to: Aimee Cousins

Project P.O: 066448
Phone #: (518) 786-7400
Fax #: 518-786-7299

Client Sample - Information - Identification

Sampler's Signature _____ Date 5/31/07

Matrix Code:
DW=drinking water WW=wastewater S=soil/solid O=Oil
GW=groundwater SL=sludge A=air X=Other

Item #	Phoenix Sample #	Customer Sample Identification	Sample Matrix	Date Sampled	Time Sampled	Analysis Request: VOC 8260	SVOC 8270 3/N	Soil VOA Vial [ ] methanol [ ] Sod Bisulfate	GL Soil container ( ) oz	GL Soil container ( ) oz	40 ml VOA Vial [ ] As is [ ] HCl	GL Amber 1000ml [ ] As is [ ] H2SO4	PL As is [ ] 250ml [ ] 500ml [ ] 1000ml	PL H2SO4 [ ] 250ml [ ] 500ml	PL HNO3 250ml	PL NaOH 250ml	Bacteria Bottle
	19140	MW-10A	GW	5/31/07	1010	X					2						
	19141	MW-1A	GW	5/31/07	1100	X					2						
	19142	MW-2A	GW	5/31/07	1235	X					2						
	19143	MW-5A	GW	5/31/07	1225	X					2						
	19144	MW-3A	GW	5/31/07	1312	X					2						
	19145	MW-4A	GW	5/31/07	1310	X	X				2	1					
	19146	MW-7A	GW	5/31/07	1410	X	X				2	1					
	19147	MW-9A	GW	5/31/07	1412	X	X				2	1					
	19148	MW-6A	GW	5/31/07	1455	X	X				2	1					
	19149	MW-8A	GW	5/31/07	1455	X	X				2	1					

Relinquished by:	Accepted by:	Date:	Time:
		5/31/07	10:45
		6/1/07	9am

Comments, Special Requirements or Regulations:

Turnaround:
☐ 1 Day*
☐ 2 Days*
☐ 3 Days*
☒ Standard
☐ Other

* Surcharge Applies

Requirements for CT/RI
☐ Res. Criteria
☒ GW Protection
☐ GA Mobility
☐ GB Mobility
☐ SW Protection
☐ Res. Vol.
☐ Ind. Vol.
☐ RCP Certification

Requirements for MA
☐ GW-1
☐ GW-2
☐ GW-3
☐ S-1
☐ S-2
☐ S-3
☐ MCP Certification
☐ Other

EXHIBIT 5

2001/2002 URS INVESTIGATIONS

REMEDIAL INVESTIGATION/ FEASIBILITY STUDY WORK PLAN

PROJECT MANAGEMENT WORK PLAN

WORK ASSIGNMENT D003825-32

POULTNEY STREET SITE
WHITEHALL (V)

SITE NO. 5-58-019
WASHINGTON (C), NY

Prepared for:
NEW YORK STATE
DEPARTMENT OF ENVIRONMENTAL CONSERVATION
625 Broadway, Albany, New York

Erin M. Crotty, Commissioner

DIVISION OF ENVIRONMENTAL REMEDIATION

URS Corporation Group Consultants
282 Delaware Avenue
Buffalo, New York 14202

FINAL
November 2001

G8241

1.0 INTRODUCTION

This *Project Management Work Plan* has been prepared to identify the activities and costs for the Remedial Investigation/Feasibility Study (RI/FS) at the Poultney Street site in Whitehall, Washington County, New York. This is Work Assignment No. 32 under URS Corporation Group Consultants' (URS's) Standby Contract with the New York State Department of Environmental Conservation (NYSDEC). The separately bound *Field Sampling Plan (FSP)* and *Quality Assurance Project Plan (QAPP)* specifies the number and location of field samples to be obtained during RI field activities, and the procedures to be followed during sample collection.

1.1 Site Background

The site is an unimproved parcel of land, approximately two acres in size, south of the E.B. Metals Facility on Route 4 in the Village of Whitehall, Washington County (Figure 1-1). The site is on land owned by the Clarendon and Pittsford Railroad Company, and is approximately bounded by E.B. Metals to the north, the raised railroad embankment to the south, the Champlain Canal to the west, and a point 500 feet from the canal to the east. The site is located on an island bounded by Wood Creek on the north, east, and south, and the Champlain Canal on the west. The island is zoned light industrial.

The site consists of a drum disposal area on the western portion of the property, and a former fire training area near the center of the property. In the early 1970's, the site was used for training exercises by seven local fire departments. The local fire departments brought containers of flammable materials, solicited and obtained from various sources, to the property for fire extinguishing training and practice. In 1989, forty drums were identified and removed from this area and subsequently sampled and shipped offsite for proper disposal. The drum contents were found to contain acetone, trichloroethene, lighter polycyclic aromatic hydrocarbons (PAHs), phthalates, and benzene, toluene, ethylbenzene and xylene (BTEX). NYSDEC collected environmental samples in late 1989 and a number of contaminants were identified, including, but not limited to, acetone, xylene, toluene, trichloroethene (TCE) and 1,1,2-trichloroethane (1,1,2-TCA). Based on the 1989 data, a NYSDEC contractor took additional samples in 1995, finding volatile organic compounds (VOCs) in both soil and groundwater.

MW-2 and MW-3: The observation of higher concentrations in 1998 in the downgradient PZ-12 compared to PZ-9 suggest that there may be another source of subsurface contamination on the property, in addition, to, the abandoned fire training trench. Therefore, URS will install two wells (designated as MW-2 and MW-3) approximately 20 feet to the north and south, respectively, of PZ-12, as depicted on Figure 2-1. These locations may be adjusted depending on results from screening during soil boring in this area.

MW-4: In order to delineate the magnitude and extent of the contaminant plume emanating from the site, and to assess if the plume has migrated downgradient beyond the property limits, URS will install monitoring well MW-4 at the location depicted on the attached Field Investigation Plan. This location was chosen based on review of the Groundwater Elevation Contour Map presented in Figure 5 of the RI/FS Report, and the elevated concentration of TCE at PZ-12. In addition, should planned well MW-3 be found contaminated, comparison of concentrations in MW-4 to MW-3 may provide insight regarding whether the sewer line is intercepting any of the plume.

MW-5: Groundwater flow is principally to the north, but has a westward component from the trench as well, heading towards the canal. The groundwater in the area northwest of the trench is uncharacterized, except for PZ-4 located about 100 feet away. Thus, URS recommends installation of MW-5 approximately 50 feet northwest of the trench.

URS also recommends installation of one deep well in the source area to determine whether contamination has vertically migrated. The soil boring program will evaluate contamination at depth; however, it will not be capable of identifying deep groundwater contamination. The following deep well will be installed.

MW-6: This deep well will be installed directly within the trench. Screen location will be determined in the field, and preferably will be located above a thicker confining layer of clay, silt or till but not deeper than 30 feet bgs. Some stratigraphic information will be available from soil borings advanced in this area for the soil investigation to assist in this decision. If a split spoon sample taken during well installation reveals that a low permeability area acting as a confining layer between upper and lower water bearing zones is encountered, then the borehole will be immediately halted and backfilled with cement/bentonite grout. The project geologist will confer

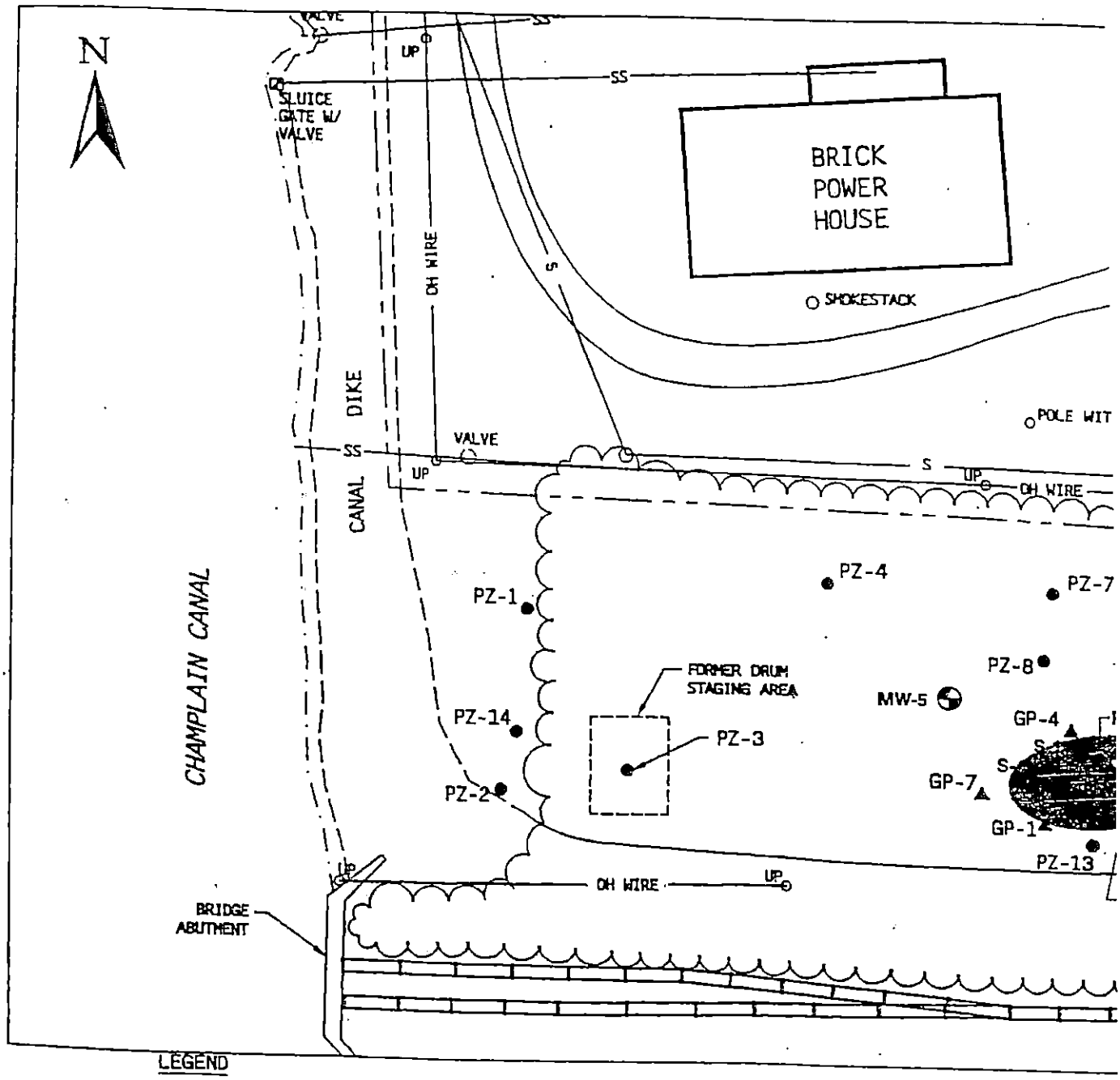

SOURCE: "Remdial Investigation/Feasibility Study Report for the Poultney Street Site", Environmental Liability Management, Inc.

AG16833-35944.01-080301-GCM

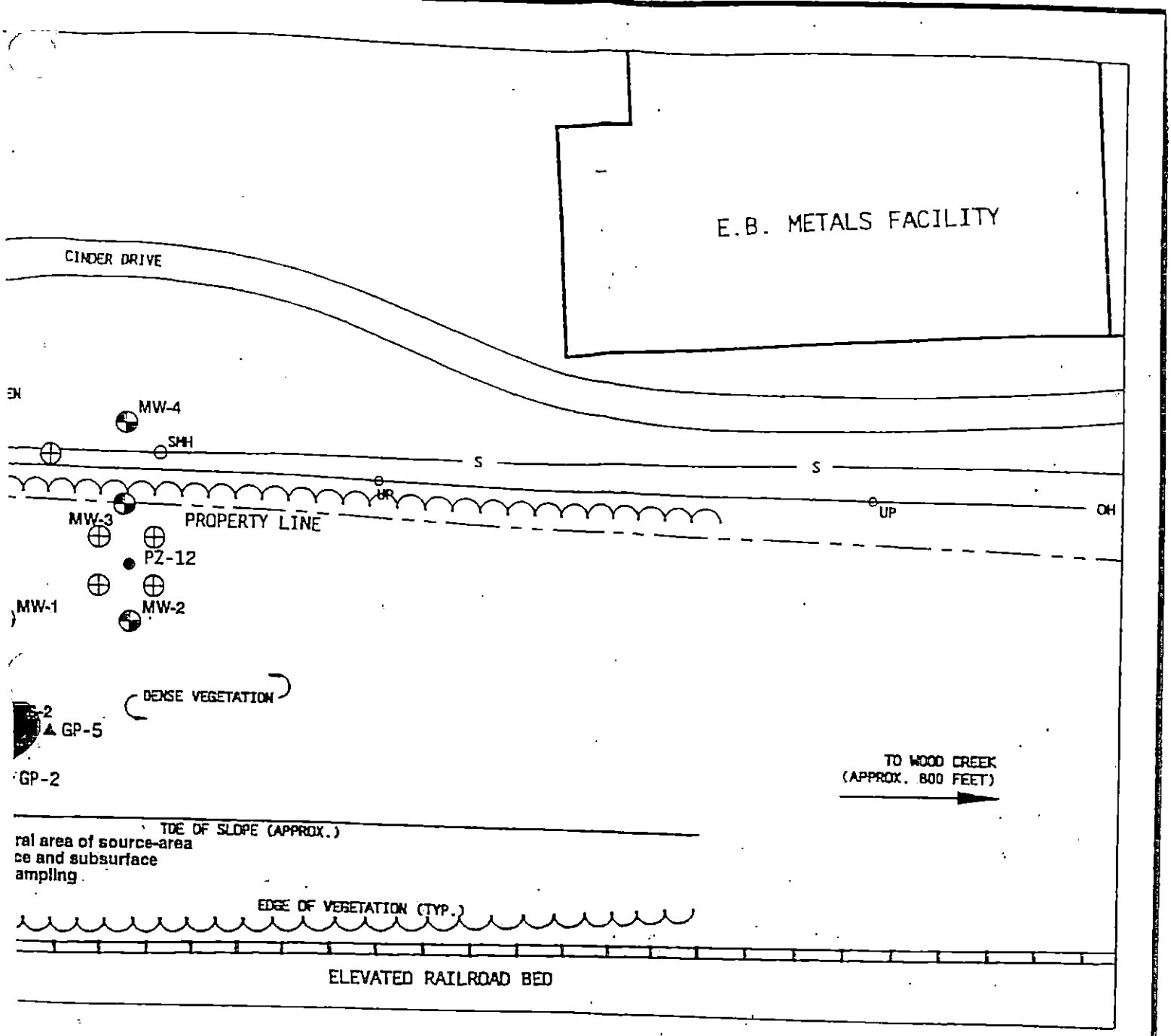

ral area of source-area
ce and subsurface
ampling

!S

URS

POULTNEY STREET
FIELD INVESTIGATION SITE PLAN

FIGURE 2-1

URS

June 19, 2002

Old Champlain Mills Inc.
308 West River Road
Gansevoort, N.Y. 12831

Re: Poultney Street Site Sampling Results

To whom it may concern:

URS Corporation is writing on behalf of our client, the New York State Department of Environmental Conservation (NYSDEC) regarding environmental sampling that has been conducted at the Poultney Street Site in Whitehall New York. During field work on June 17, 2002, a member of our staff was approached by Mr. George Story, who indicated he represented the owner of the former EB Metals property, which is located immediately north of the site. Mr. Story requested a copy of the results of samples taken on this property. With this letter, we are providing you with these results. Mr. Story did not provide us with an address, but we are sending these results to Old Champlain Mills, which is listed as the owner of this property.

As shown on the included figure, samples were taken from four locations on your property. This included two surface soil samples (SS-05 and SS-06), one subsurface sample (SB-19), and a groundwater sample from monitoring well MW-04. The surface soil samples were analyzed for semi-volatile organic compounds (SVOCs), only. The subsurface soils were analyzed for both volatile and semi-volatile organic compounds. The groundwater was analyzed for volatile organic compounds (VOCs). Additionally, some other non-pollutant parameters were measured because they can help us determine whether any natural degradation processes are occurring if and when contamination is detected.

The results from the surface soil analyses are presented on the attached table. Some low levels of polycyclic aromatic hydrocarbons (PAHs) were detected. These common compounds do not appear to be site-related, and in fact were not seen in surface soils taken on the site itself. The groundwater sample from MW-04 did not contain any VOC contamination. The data from SB-19 are presented on the second table. Three VOCs were detected at very low levels.

If you have any further questions, please contact Mr. Russell Huyck of NYSDEC at 518-897-1242.

Sincerely yours,

URS CORPORATION

Jon Sundquist, Ph.D.
Project Manager

cc: Russell Huyck, P.E.
Stephen B. Le Fevre, PG, CPG

URS Corporation
282 Delaware Avenue
Buffalo, NY 14202-1805
Tel: 716.856.5636
Fax: 716.856.2545

J:\35944.01\word\cor\EB Metals data

TABLE 4-1
SUMMARY OF SURFACE SOIL ANALYTICAL DATA
POULTNEY STREET

Location ID			SS-05	SS-06
Sample ID			SS-5	SS-6
Matrix			Soil	Soil
Depth Interval (ft)			-	-
Date Sampled			12/20/01	12/20/01
Parameter	Units	Criteria*1		
Semivolatile Organic Compounds	ppb			
Anthracene	UG/KG	50000	93 J	
Benzo(a)anthracene	UG/KG	224	310 J	78 J
Benzo(a)pyrene	UG/KG	61	310 J	81 J
Benzo(b)fluoranthene	UG/KG	1100	250 J	71 J
Benzo(g,h,i)perylene	UG/KG	50000	120 J	44 J
Benzo(k)fluoranthene	UG/KG	1100	250 J	65 J
Carbazole	UG/KG	-	35 J	
Chrysene	UG/KG	400	310 J	87 J
Dibenz(a,h)anthracene	UG/KG	14	48 J	
Fluoranthene	UG/KG	50000	530	130 J
Fluorene	UG/KG	50000	25 J	
Indeno(1,2,3-cd)pyrene	UG/KG	3200	170 J	53 J
Phenanthrene	UG/KG	50000	360 J	70 J
Pyrene	UG/KG	50000	560	130 J
Miscellaneous Parameters				
Total Organic Carbon (TOC)	MG/KG	-	85,410	92,090

224
61
14

*Criteria- NYSDEC TAGM: Determination of Soil Cleanup Objectives and Cleanup Levels; HWR-94-4046 January 24, 1994 (Revised). Recommended Cleanup Objectives.

Flags assigned during chemistry validation are shown.

(oval) Concentration Exceeds Criteria.

J - The reported concentration is an estimated value.

Only Detected Results Reported.

TABLE 4-2
SUMMARY OF SUBSURFACE SOIL ANALYTICAL DATA
POULTNEY STREET

Location ID			SB-19
Sample ID			SB19-2-4
Matrix			Soil
Depth Interval (ft)			2.0-4.0
Date Sampled			01/21/02
Parameter	Units	Criteria*	
Volatile Organic Compounds			
1,1,2-Trichloro-1,2,2-trifluoroethane	UG/KG	6000	
1,1-Dichloroethene	UG/KG	400	
1,2-Dichloroethene (cis)	UG/KG	-	3 J
1,2-Dichloroethene (trans)	UG/KG	300	
Acetone	UG/KG	200	
Benzene	UG/KG	60	
Carbon disulfide	UG/KG	2700	
Chloromethane	UG/KG	-	
Cyclohexane	UG/KG	-	
Ethylbenzene	UG/KG	5500	
Isopropylbenzene (Cumene)	UG/KG	-	
Methyl acetate	UG/KG	-	
Methyl ethyl ketone (2-Butanone)	UG/KG	300	
Methylcyclohexane	UG/KG	-	
Methylene chloride	UG/KG	100	
Tetrachloroethene	UG/KG	1400	
Toluene	UG/KG	1500	1 J
Trichloroethene	UG/KG	700	7 J
Vinyl chloride	UG/KG	200	
Xylene (total)	UG/KG	1200	
Semivolatile Organic Compounds			
1,1'-Biphenyl	UG/KG	-	
2-Methylnaphthalene	UG/KG	36400	

*Criteria: NYSDEC TAGM: Determination of Soil Cleanup Objectives and Cleanup Levels; HWR-94-4046 January 24, 1994 (Revised). Recommended Cleanup Objectives.

Flags assigned during chemistry validation are shown.

Concentration Exceeds Criteria.

D - Result reported from a secondary dilution analysis.
J - The reported concentration is an estimated value.
NA - Not analyzed.
R - The data is rejected.

Only Detected Results Reported.

EXHIBIT 6

1996 CONSENT DECREE

UNITED STATES DISTRICT COURT
NORTHERN DISTRICT OF NEW YORK

THE STATE OF NEW YORK, and THOMAS C. JORLING, Commissioner of the New York State Department of Environmental Conservation, as Trustee of Natural Resources,

Plaintiff,

- against -

E.B. METAL INDUSTRIES, INC., and CLARENDON AND PITTSFORD RAILROAD COMPANY, INC.

Defendants.

E.B. METAL INDUSTRIES, INC.,

Third-Party Plaintiff,

- against -

GAIL S. SHAFFER, Secretary of State of the State of New York; JOHN C. EGAN, Commissioner of Transportation of the State of New York; COUNTY OF WASHINGTON; TOWN OF WHITEHALL; NORTON PERFORMANCE PLASTICS CORPORATION; SKENESBOROUGH CENTRAL VOLUNTEER FIRE CO., INC.; FORT ANN VOLUNTEER FIRE COMPANY, INC.; NORTH GRANVILLE HOSE COMPANY, INC.; MIDDLE GRANVILLE FIRE COMPANY; GRANVILLE FIRE COMPANY; KINGSBURY VOLUNTEER HOSE COMPANY #1, INC.; and DRESDEN VOLUNTEER FIRE COMPANY, INC.,

Third Party Defendants.

CONSENT DECREE

Index 93-CV-1356

McAvoy, Ch. J.
Smith, M.J.

WHEREAS, the State of New York and the New York State Department of Environmental Conservation (the "State") is responsible for enforcement of the Environmental Conservation Law of the State of New York ("ECL");

WHEREAS, the State of New York conducted a barrel removal action in 1989-1990 at property adjacent to the E.B. Metal Industries, Inc. ("E.B. Metals") facility in Whitehall, New

York, owned by the Clarendon and Pittsford Railroad Company, Inc. ("CPRR"), and the State at which costs were incurred;

WHEREAS, the State of New York placed the property from which barrels were removed on the State's Hazardous Waste Site List as the Poultney Street Site, Registry No. 558019 (the "Site"), finding that the soil and groundwater at the Site was contaminated with a broad spectrum of "pollutants or contaminants" as defined under 42 U.S.C. § 9601(33), including but not limited to volatile organics and vinyl chloride;

WHEREAS, the State of New York filed its complaint in this action in September 1993, against the defendants E.B. Metals and the CPRR to recoup costs incurred by the State for removal of barrels containing hazardous substances and/or hazardous wastes during the years 1972-1990, and for remediation of the entire Site.

WHEREAS, E.B. Metals filed a third-party complaint against the Secretary of State for the State of New York ("DOS"), the Commissioner of the Department of Transportation for the State of New York ("DOT"), Washington County, the Town of Whitehall ("Whitehall"), Norton Performance Plastics Corporation ("Norton"), and seven local fire companies: Skenesborough Central Volunteer Fire Company, Inc. ("Skenesborough"), Fort Ann Volunteer Fire Company, Inc. ("Fort Ann"), North Granville Hose Company, Inc. ("North Granville"), Middle Granville Fire Company ("Middle Granville"), Granville Fire Company ("Granville"), Kingsbury Volunteer Hose Company #1, Inc. ("Kingsbury") and Dresden Volunteer Fire Company, Inc. ("Dresden") alleging, among

other activities, participation in fire training exercises in the early 1970s at the Site and the ultimate discharge of the hazardous substances alleged in the State's Complaint and Amended Complaint to be present at the Site;

WHEREAS, in April 1995, DEC and its contractor completed a sampling event at the Poultney Street Site which confirmed that the Site remained contaminated with hazardous substances in both the soil and groundwater;

WHEREAS, E.B. Metals no longer has the economic resources or ability to continue its operations and is in danger of closing and shutting down its facility;

WHEREAS, Advanced Vending Manufacturing, Inc. ("AVM"), a New York corporation, has offered to purchase E.B. Metal's facility and plans to expand the operations at the Whitehall facility, all contingent upon not assuming legal or financial responsibility for any alleged environmental liabilities incurred by E.B. Metals for any alleged involvement at the Site;

WHEREAS, the State has determined that settlement of this action is within its authority under the Environmental Conservation Law ("ECL"), as well as the State's authority under CERCLA, 42 U.S.C. § 9601, et seq., and that such settlement is practicable and in the public interest within the meaning of Section 122(g)(1) of CERCLA, 42 U.S.C. § 9622(g)(1); and

WHEREAS, the undersigned, having agreed and stipulated that this Consent Decree may be entered in this action, incorporating the terms herein, and the Court having reviewed

such terms and condition and having determined that they are fair, reasonable and appropriate and having approved this Consent Decree in all respects;

THEREFORE, IT IS HEREBY STIPULATED, ORDERED AND AGREED as follows:

1. In order to avoid further extensive and protracted litigation, and without admitting any liability or responsibility for any of the pollutants, contaminants or hazardous substances found at the Site, the parties and third-parties to the above-captioned action and E.B. Metals' purchaser, AVM, and each of their respective officers, directors, shareholders, employees, agents, representatives, successors or assigns (hereinafter "signatories"), agree that the Court has subject matter jurisdiction pursuant to 42 U.S.C. § 9613(b) over this matter, and personal jurisdiction over the signatories consenting hereto, and agree to settle this action among them pursuant to the terms and conditions of this Consent Decree, contingent upon the closing of the contract of sale of E.B. Metals to AVM. If the sale of E.B. Metals to AVM is not consummated, the terms of this Consent Decree are null and void, and without legal force and effect. The State shall provide written notice to the signatories and the Court within fourteen (14) days of the date this Consent Decree is approved by the Court if the sale of E.B. Metals to AVM is not consummated as provided in this paragraph. In the event such notice is not given within the fourteen (14) day time period, this Consent Decree shall be effective.

I.

2. E.B. Metals agrees to pay the sum of $40,000 and AVM agrees to pay the sum of $20,000 to the State in the form of a cash contribution at the time of the closing of the sale between E.B. Metals and AVM, and the combined total settlement proceeds of $60,000 shall be transmitted to, and be placed into an escrow account to be established by counsel for CPRR and Norton, which funds shall be used for the purpose of developing and implementing a preliminary site assessment at the Poultney Street Site. E.B. Metals and AVM represent that the funds to be contributed to the escrow account are derived from AVM ($20,000); from E.B. Metal Industries insurer, Home Insurance Company, 59 Maiden Lane, New York, New York ($25,000); from E.B. Metals Industries, Inc. ($5,000); and from the individual stockholders of E.B. Metals ($10,000). The payment by E.B. Metals, the Home Insurance Company, as E.B. Metals insurance carrier, and AVM of said settlement proceeds shall be in full and final settlement and satisfaction of all past, present and future claims or causes of action which the State had, has or may have against E.B. Metals, the Home Insurance Company and AVM, their respective officers, directors, shareholders, employees, agents, representatives, successors or assigns with respect to the Poultney Street Site, including but not limited to all recovery claims, remedial claims and all claims set forth in the complaint and the amended complaint in this action, and including, but not limited to all claims to "remove" or for "removal" of any

allegedly released hazardous substances at the site, as those terms are defined under 42 U.S.C. § 9601(23); all "remedy" or "remedial action", as those terms are defined under 42 U.S.C. § 9601(24) for any hazardous substances, known or unknown, at the site; any "response" costs, as that term is defined under 42 U.S.C. § 9601(25); any "transport" or "transportation" costs, as those terms are defined under 42 U.S.C. § 9601(26).

II.

3. The CPRR and third-party defendant Norton Performance Plastics Corporation ("Norton") agree to develop, for DEC approval, an investigative work plan for a preliminary site assessment ("PSA") at the Poultney Street Site for the purpose of investigating the soil and groundwater contamination at the Site, to assess whether there are any existing receptors for such contamination, to determine remedial needs and to develop an estimate of remedial costs. The workplan, together with an estimate of all contractor costs for development and implementation of the PSA shall be submitted to the State for review and approval on or before May 15, 1996.

4. Upon DEC approval of the workplan and contractor costs, CPRR and Norton will expeditiously implement the PSA workplan, subject to DEC oversight, using that approved portion of the escrow account to fund the PSA, and return the remainder, if any, to the State in the form of a certified check made payable to the Department of Environmental Conservation, sent to the following address:

Director
Bureau of Program Management
Division of Hazardous Waste Remediation
Department of Environmental Conservation
50 Wolf Road
Albany, New York 12233-7010

The check shall be accompanied by an accounting of how the escrow funds were spent. It is expressly understood that the cost of developing and implementing the PSA workplan shall not exceed the sum of $60,000, and in the event the State requires additional investigation, the State shall assume the costs for that work.

5. Upon completion of the PSA and the estimate of remedial costs, the CPRR agrees to pay 10 per cent of the estimated remedial costs, up to and including the maximum amount of $75,000.

6. Upon completion of the PSA and the estimate of remedial costs, Norton agrees to pay 10 per cent of the estimated remedial costs, up to and including the maximum amount of $75,000.

7. The payment by CPRR and Norton of said settlement proceeds shall be in full and final settlement and satisfaction of all past, present and future claims or causes of action which any signatory had, has or may have against CPRR and Norton, their respective officers, directors, shareholders, employees, agents, representatives, successors or assigns with respect to the Poultney Street Site, including but not limited to all recovery claims, remedial claims and all claims set forth in the complaint and the amended complaint in this action, and including, but not limited to all claims to "remove" or for "removal" of any

allegedly released hazardous substances at the site, as those terms are defined under 42 U.S.C. § 9601(23); all "remedy" or "remedial action", as those terms are defined under 42 U.S.C. § 9601(24) for any hazardous substances, known or unknown, at the site; any "response" costs, as that term is defined under 42 U.S.C. § 9601(25); any "transport" or "transportation" costs, as those terms are defined under 42 U.S.C. § 9601(26).

8. The State commits to implement a remedy for the Site that, at a minimum, will achieve a level of clean-up consistent with the remedy to be identified through the implementation of the investigative workplan described in paragraph 3, the requirements of the Environmental Conservation Law and of CERCLA.

III.

9. Third-party defendants Washington County, Whitehall, Skenesborough Central Volunteer Fire Company, Inc. ("Skenesborough"), Fort Ann Volunteer Fire Company, Inc. ("Fort Ann"), Kingsbury Volunteer Hose Company #1, Inc. ("Kingsbury") and Dresden Volunteer Fire Company, Inc. ("Dresden") each agree to pay the sum of $5,000 to the State of New York, The third-party defendants North Granville Hose Company, Inc. ("North Granville"), Middle Granville Fire Company ("Middle Granville"), Granville Fire Company ("Granville"), are understood to have contributed other valuable consideration to these settlement proceeds and therefore shall be considered payment by the third-party defendants Washington County, Whitehall, Skenesborough,

Fort Ann, Kingsbury and Dresden of said settlement proceeds to have also paid in full and final settlement and satisfaction of all past, present and future claims or causes of action which a signatory had, has or may have against Washington County, Whitehall, Skenesborough, Fort Ann, Kingsbury, Dresden, North Granville, Middle Granville and Granville, their respective officers, directors, shareholders, employees, agents, representatives, successors or assigns with respect to the Poultney Street Site, including but not limited to all recovery claims, remedial claims and all claims set forth in the complaint and the amended complaint in this action, and including, but not limited to all claims to "remove" or for "removal" of any allegedly released hazardous substances at the site, as those terms are defined under 42 U.S.C. § 9601(23); all "remedy" or "remedial action", as those terms are defined under 42 U.S.C. § 9601(24) for any hazardous substances, known or unknown, at the site; any "response" costs, as that term is defined under 42 U.S.C. § 9601(25); any "transport" or "transportation" costs, as those terms are defined under 42 U.S.C. § 9601(26).

10. The listed third-parties are released by the State, the parties, other third-parties and AVM from any further claims or liability for past or future costs relating to contamination at the Site.

IV.

11. This Consent Decree shall bind and inure to the benefit of the signatories to the Consent Decree, their agents

and employees, officers, directors, shareholders, employees, and their respective successors and assigns, and to AVM, its officers, directors, shareholders, successors and assigns, and to E.B. Metals' insurer, Home Insurance Company, its officers, directors, shareholders, successors and assigns.

12. The signatories to this Consent Decree hereby fully and mutually discharge and release one another from any and all past, present or future claims, actions or proceedings, direct or third-party causes of action or counterclaims or other claims for any and all liability whatsoever under Section 107(a), and 113 of CERCLA or injunctive relief under CERCLA or the Resource Conservation and Recovery Act ("RCRA")or New York statutory or common law for response costs, removal actions, remedial measures, and any other costs and expenses, including but not limited to all claims for damages (including natural resource damages), fees (including attorneys fees), fines and penalties, equitable relief, and past, present and future claims out of or relating to the actual or alleged past, present or future release or threatened release of hazardous substances or any other substances at or from the Poultney Street Site, which presently exist at said Site, and any potential migration from said Site, including but not limited to all claims set forth in the Complaint, the Answer, Third-Party Complaint, Cross-Claims and Counterclaims of any of the parties referred to in the caption of this agreement, all of which are hereby dismissed with prejudice; specifically including but not limited to, all costs

and expenses as may be necessary to monitor, assess, study, evaluate the release or threat of release of hazardous substances at the Site; costs to remove and dispose of any such material from the Site, or the taking of such other actions as may be necessary to prevent, minimize, or mitigate damage to public health or welfare or to the environment, including but not limited to, security fencing or other measures to limit access, provisions for alternative water supplies, temporary evacuation and housing of threatened individuals, storage, confinement, perimeter protection using dikes, trenches, ditches, clay cover, neutralization, cleanup of released hazardous substances and associated contaminated materials, recycling or reuse, diversion, destruction, segregation of hazardous substances or reactive wastes, dredging or excavation, repair or replacement of leaking containers, collection of leachate and runoff, on site treatment or incineration, handling and transportation of all hazardous substances and associated contaminated materials at the Site.

13. The terms and conditions of this Consent Decree shall be modified only by written agreement among the signatories, with approval of the Court.

14. The undersigned representatives of each of the signatories certify that they are fully authorized to enter into this Consent Decree, and its terms and conditions, and to execute and to legally bind such party to this document.

15. This Consent Decree may be executed for the convenience of the signatories hereto, individually or in

combination, in one or more counterparts, each of which for all purposes shall be deemed to have the status of an executed original and all of which shall together constitute one and the same agreement.

16. This Consent Decree shall become effective and bind the parties only upon its entry, submission and approval by the Court.

17. Nothing in this Consent Decree shall be construed to create any rights in, or grant any cause of action to, any person not a signatory to this Order.

18. This Consent Decree shall constitute the resolution of all alleged or potential liabilities related to the Site.

19. Pursuant to 42 U.S.C. § 9613(f) and New York General Obligations Law § 15-108, and all other applicable common law and statutes, the settling defendants and third-party defendants, The Home Insurance Company as E.B. Metals' insurance carrier, and AVM shall not be liable for any claim for contribution, or otherwise, however characterized or denominated, regarding matters addressed in this Consent Decree, by entering into and carrying out the terms of the Consent Decree having resolved all of their liability or potential liability to the State with respect to the Poultney Street Site, as defined in paragraph 11, supra.

20. The provisions, terms and conditions of this Consent Decree, and any actions or submission under, or by reason

of the provisions, terms and conditions hereof, shall not, in any action or proceeding or litigation whatsoever, whether or not brought by the State, be construed as or operated as an admission that any party to this Consent Decree has violated any law or regulation or otherwise committed a breach of any duty at any time. The signatories agree that they will not use the Consent Decree as a basis for the institution of any judicial or administrative proceedings, or as the basis for any defense, jurisdictional or otherwise, other than as necessary to enforce a collection of the agreed settlement sum in the event of default or to enforce the provisions of this Consent Decree.

21. The obligations imposed under this Consent Decree shall not be deemed to constitute any type of fine or penalty.

22 AP

21. Upon reasonable advanced notice, E.B. Metals and AVM agree to provide access only to the Poultney Street Site across the E.B. Metals property in order to allow investigation and remediation of the Site. In providing such access, E.B. Metals and AVM shall not be responsible for or assume any liability in connection with the granting or use of such access.

WHEREFORE, after having reviewed the terms and conditions of this Consent Decree, the signatories hereby consent to this agreement as set forth below.

Dated: 3/18/96

Plaintiff and Third-Party Defendants Departments of State and Transportation
DENNIS C. VACCO
Attorney General of the State of New York

By: _____
LISA M. BURIANEK
Assistant Attorney General
Bar Roll No.

Dated:

Defendant E.B. Metal Industries, Inc.

By: _____
HOWARD SHAMRS, President

Dated:

Advanced Vending Manufacturing, Inc.

By: _____

_____
Identity of Signatory

22. Upon reasonable advanced notice, E.B. Metals and AVM agree to provide access only to the Poultney Street Site across the E.B. Metals property in order to allow investigation and remediation of the Site. In providing such access, E.B. Metals and AVM shall not be responsible for or assume any liability in connection with the granting or use of such access.

WHEREFORE, after having reviewed the terms and conditions of this Consent Decree, the signatories hereby consent to this agreement as set forth below.

Plaintiff and Third-Party Defendants Departments of State and Transportation

Dated:

DENNIS C. VACCO
Attorney General of the State of New York

By: _____
LISA M. BURIANEK
Assistant Attorney General
Bar Roll No. 506779

Defendant E.B. Metal Industries, Inc.

Dated:

By: _____
HOWARD SHAMES, President

Advanced Vending Manufacturing, Inc.

Dated:

By: _____

_____
Identity of Signatory

Defendant Clarendon and
Pittsford Railroad, Inc.

Dated: By: _____
JOHN PENNINGTON
President

Third-Party Defendant
Norton Performance
Plastics, Inc.

Dated: By: _____

_____
Identity of Signatory

Third-Party Defendant
Washington County,
New York

Dated: March 15, 1996 By: _____
R. Harry Booth, Chairman,
Board of Supervisors
Identity of Signatory

Third-Party Defendant
Town of Whitehall,
New York

Dated: By: _____
MICHAEL S. MARTIN, ESQ.
TOWN ATTORNEY

Third-Party Defendant
Skenesborough Central
Volunteer Fire Co., Inc.

Dated: By: _____
MICHAEL S. MARTIN, ESQ.
Village Attorney

Third-Party Defendant
Norton Performance
Plastics, Inc.

Dated: By: _____

Identity of Signatory

Third-Party Defendant
Washington County,
New York

Dated: By: _____

Identity of Signatory

Third-Party Defendant
Town of Whitehall,
New York

Dated: March 15, 1996 By: _____
MICHAEL S. MARTIN, ESQ.
TOWN ATTORNEY

Third-Party Defendant
Skenesborough Central
Volunteer Fire Co., Inc.

Dated: March 15, 1996 By: _____
MICHAEL S. MARTIN, ESQ.
Village Attorney

Third-Party Defendant
Port Ann Volunteer
Fire Co., Inc.

Dated: By: _____

Identity of Signatory

Defendant Clarendon and
Pittsford Railroad, Inc.

Dated: By: _____
JOHN PENNINGTON
President

Third-Party Defendant
Norton Performance
Plastics, Inc.

Dated: By: _____
Counsel of Record
Identity of Signatory

Third-Party Defendant
Washington County,
New York

Dated: By: _____

Identity of Signatory

Third-Party Defendant
Town of Whitehall,
New York

Dated: By: _____
MICHAEL S. MARTIN, ESQ.
TOWN ATTORNEY

Third-Party Defendant
Skenesborough Central
Volunteer Fire Co., Inc.

Dated: By: _____
MICHAEL S. MARTIN, ESQ.
Village Attorney

Defendant Clarendon and
Pittsford Railroad, Inc.

Dated: 3/18/96

By: _____
JOHN PENNINGTON
President

Third-Party Defendant
Norton Performance
Plastics, Inc.

Dated:

By: _____

Identity of Signatory

Third-Party Defendant
Washington County,
New York

Dated:

By: _____

Identity of Signatory

Third-Party Defendant
Town of Whitehall,
New York

Dated:

By: _____
MICHAEL S. MARTIN, ESQ.
TOWN ATTORNEY

Third-Party Defendant
Skenesborough Central
Volunteer Fire Co., Inc.

Dated:

By: _____
MICHAEL S. MARTIN, ESQ.
Village Attorney

Third-Party Defendant
Fort Ann Volunteer
Fire Co., Inc.

Dated: 3-18-94

By: Gary J. O'Dell

Counsel of Record
Identity of Signatory

Third-Party Defendant
Kingsbury Volunteer Hose
Company #1, Inc.

Dated: 3.18-94

By: Gary J. O'Dell

Counsel of record
Identity of Signatory

Third-Party Defendant
Dresden Volunteer
Fire Company, Inc.

Dated:

By: _____

Identity of Signatory

SO ORDERED.

Dated:

U.S.D.J.

Third Party Defendant
Fort Ann Volunteer
Fire Co., Inc.

Dated: By: _____

Identity of Signatory

Third Party Defendant
~~Kingsbury Volunteer Hose~~
~~Company #1~~
Dresden Volunteer Fire Company, Inc.

Dated: 3/16/96 By: Jack M. Bell

Attorney
Identity of Signatory

Third Party Defendant
~~Dresden Volunteer~~
~~Fire Company~~

Dated: By: _____

Identity of Signatory

SO ORDERED.

Dated: _____

U.S.D.J.